POTTERTON

Installation & Service Instructions

Envoy System

Wall Mounted, Fan Powered, Balanced Flue, Gas Condensing System Boiler

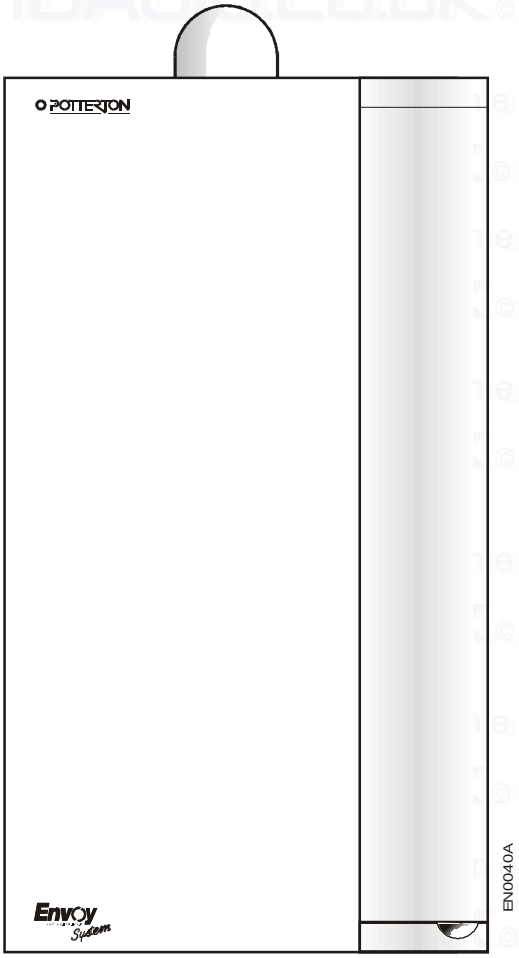

THE GAS SAFETY (INSTALLATION AND USE) REGULATIONS 1994 (as amended).

‘‘ In your own interest, and that of safety, it is law that all gas appliances are installed by competent persons, in accordance with the above regulations. Failure to install appliances correctly could lead to prosecution.’’

The polythene bags used for packaging are a potential hazard to babies and young children and MUST BE DISPOSED OF IMMEDIATELY.

Installation must be in accordance with the Installation & Service Instructions and the rules in force.

LEAVE THESE INSTRUCTIONS WITH THE USER FOR USE ON FUTURE CALLS

For Use With Natural Gas (G20) Only At 20mbar
For Use in GB & IE

CE

IMPORTANT
PLEASE READ THIS BOOK BEFORE INSTALLING, OPERATING OR SERVICING THIS BOILER.

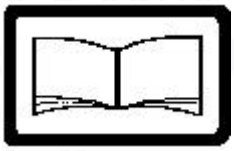

Contents - Page 2

Technical Data 3
1 Installation Requirements 5
2 Installation 10
3 Commissioning 14
4 Servicing & Replacement of Parts 17

Servicing:

Preparation of the Boiler 17
Removing Fan 18
Removing Combustion Chamber & Flue Hood 18
Examination of Flueways & Cleaning 19
Re-assembly of Boiler 19

Replacement of Parts

1 Fan 20
2 Hot Surface Igniter 20
3 Flame Sensor 20
4 Insulation 20
5 Burner 21
6 Syphon 21
7 Flue Hood/Combustion Chamber Seals 21
8 Injector 21
9 Gas Valve Assembly 21
10 Sight Glass 22
11 Water Temperature Sensor 22
12 Dry Fire Temperature Sensor 22
13 Case Temperature Sensor 22
14 Diverter Valve Head 23
15 Boiler Control Board 23
16 Boiler Control Board Fuses 23
17 Water Components 24
Pump 24
Diverter Valve 24
Water Pressure Gauge 24

5 Fault Finding 25
6 Boiler Internal Wiring 28
7 Boiler Wiring Layout 29
8 Short List of Spares 30

Introduction - Page 2

The Potterton Envoy System is a high efficiency lightweight, automatically controlled wall hung gas fired condensing boiler. The flue system is room sealed and fan powered. There are five models available with outputs of 8.8kW (30,000 Btu/hr), 11.7kW (40,000 Btu/hr), 14.6kW (50,000 Btu/hr), 17.6kW (60,000 Btu/hr) and 23.4kW (80,000 Btu/hr).

These boilers are designed to provide domestic hot water and/or central heating and must be used on FULLY PUMPED sealed systems only.

Concentric horizontal and vertical flues are available from 1 metre to 3 metres in steps of 0.5 metre using the following options:-

Sales Code.	Description.
EFLUEXT 500	- 0.5 metre Flue Extension
EFLUEXT	- 1.0 metre Flue Extension
1EFLUEH	- Std 1 metre Horizontal Flue
1EFLUEV	- Std 1 metre Vertical Flue

Accessories

The following Potterton Myson controls are recommended for use with your boiler:-

Electronic Programmer EP2002, EP3002 or EP6002
Cylinder Thermostat PTT2 or PTT100
Room Thermostat PRT2 or PRT100
Frost Thermostat PRT100FR
Motorised Zone Valve MSV222 or MSV228
Motorised Diverter Valve MSV322
Thermostatic Radiator Valve

Data sheets describing these products are available on request.

Optional Extras

Sales Code.	Description.
EWPLATE	Terminal Wall Plate - where necessary can be fitted to the outside face to improve the appearance, after making good around the terminal.
EGUARD	Terminal Guard.
EFRFKIT	Flat Roof Flashing Kit - for use with Vertical Flue.
EPRFKIT	Pitched Roof Flashing Kit - for use with Vertical Flue.
ENVOYDIV	Mid Position Diverter Valve Kit

Technical Data - Page 3

Boiler Details		*30*	*40*	*50*	*60*	*80*
Heat Input	KW	10.1	13.43	16.87	20.2	26.86
	Btu/hr	34,500	45,800	57,600	68,900	91,600
Heat Output, NON-CONDENSING	KW	8.79	11.72	14.65	17.58	23.45
	Btu/hr	30,000	40,000	50,000	60,000	80,000
Heat Output, CONDENSING	KW	9.7	12.8	16.1	19.0	25.0
	Btu/hr	33,100	43,700	55,000	64,800	85,400
Gas Rate	M3/h	0.96	1.28	1.6	1.92	2.56
	ft3/hr	34.0	45.2	56.7	68.0	90.4
Burner Pressure	Mb	11.4	11.8	11.8	10.6	12.2
	in/wg	4.6	4.7	4.7	4.24	4.9
Injector Size	Mm	2.5	2.9	3.2	3.7	4.2

Classification	I2H. C1. C3. IP20	Water Capacity	3.4 litre
Burner	Furigas Pre-Mix	Condense Discharge Connection	21.5mm (¾"Plastic Compression)
Igniter	Norton 401S Hot Surface	Maximum Flow Temperature	82°C
Flame Detector	Morgon Matroc	Expansion Vessel	13.5 litre (charge pressure 1.0 bar)
Gas Control Valve	SIT Nova Mix 1 - 8 Air Gas Ratio	Pressure Relief Valve	3 bar
Electrical Supply	230V ~ 50Hz	Pump 30 - 60 Models	CP53
Fuse Rating - External	3A	Pump 80 Model	CP63
Packed Weight - Boiler	52kg	Flue Size	100mm Concentric
Gas Supply Connections	15mm Compression		
Flow Connection	22mm Compression		
Return Connection	22mm Compression		

Boiler Dimensions

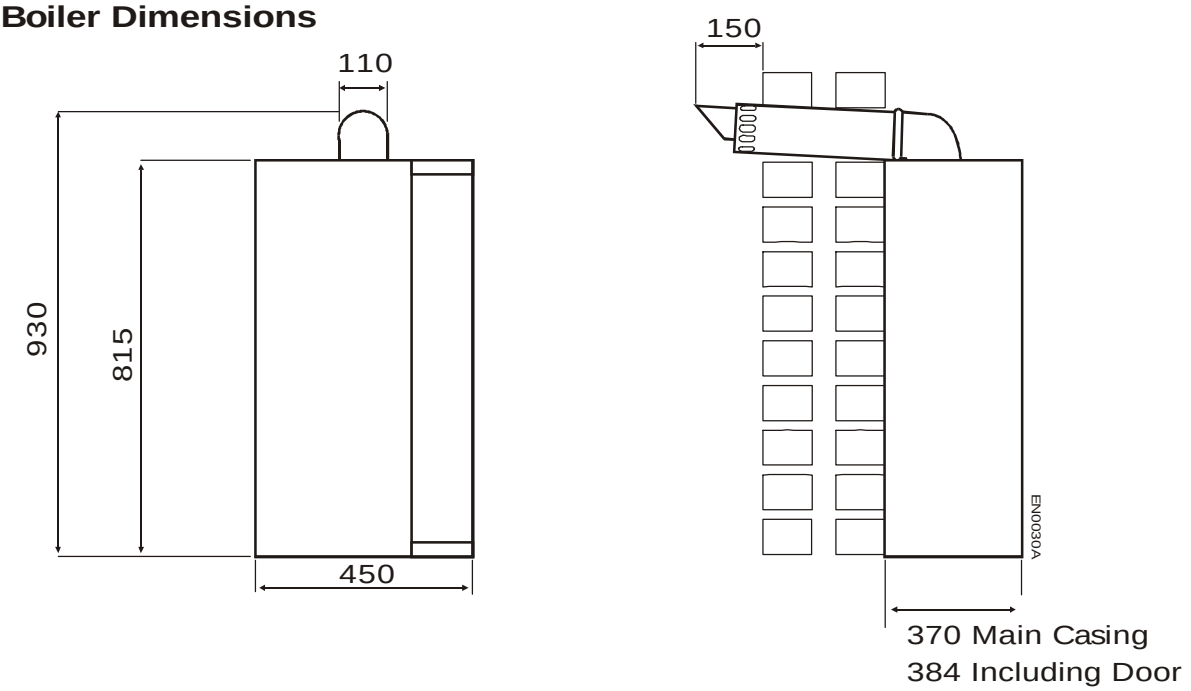

Fig.1

Technical Data - Page 4

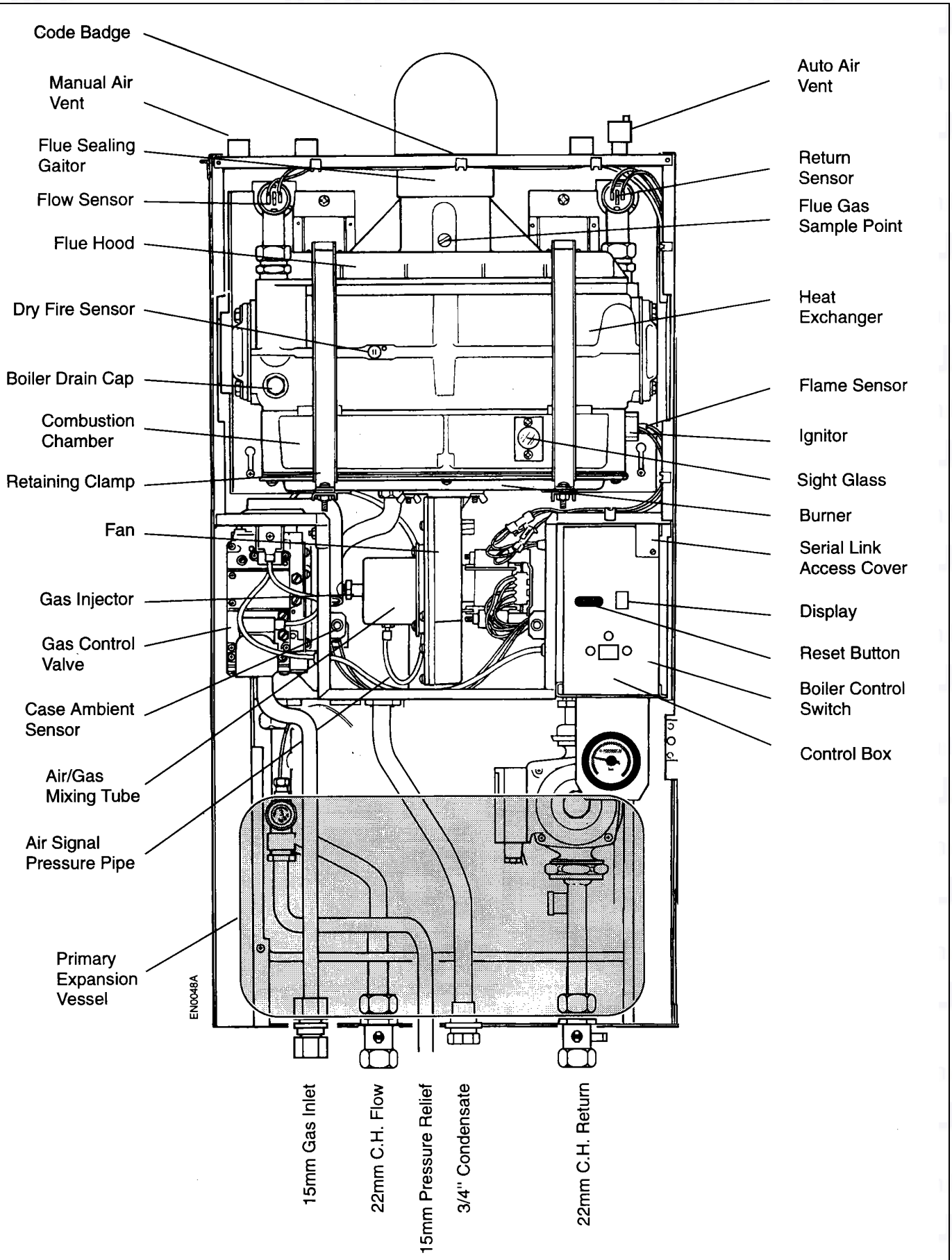

Fig.2

1. Installation Requirements - Page 5

General Information

Prior to installation the boiler should be stored as directed on the carton and in a dry place. Both the user and manufacturer rely heavily on the installer, whose job it is to install the boiler and connect it to a correctly designed heating system. Acquaint yourself with the British Standards concerning installation requirements. If you need advice on any points, Potterton Myson's Service Operations will be pleased to help (see back page).

Samples of the Envoy System Boilers have been examined by Gastec, a Netherlands Notified Body. The range is certified to comply with the essential requirements of the Gas Appliance Directive 90/396/EEC, the Low Voltage Directive 72/23/EEC and shows compliance with the Electro Magnetic Compatibility Directive 89/336/EEC and are therefore permitted to carry the CE mark.

It is important that no external devices e.g. flue dampers, economisers etc, be directly connected to this appliance unless covered by these Installation and Service Instructions or otherwise recommended by Potterton Myson Ltd. in writing. If in doubt please enquire.

Any direct connection of a control device not recommended by Potterton Myson could invalidate the certificate and normal appliance warranty and could also infringe the Gas Safety Regulations. Manufacturers instructions must not be taken in any way as over-riding statutory obligations.

Codes of Practice

The boiler must be installed in accordance with the Gas Safety (Installation & Use) Regulations 1994 (as amended), and the current issue of:-

I.E.E. Regulations.
Model Water Bye Laws.
Building Regulations.
Building Standards for Scotland.
Health and Safety Document No. 635. (The Electricity at Work Regulations 1989).

Health and Safety Information for the Installer and Service Engineer

Under the Consumer Protection Act 1987 and Section 6 of the Health and Safety at Work Act 1974, we are required to provide information on substances hazardous to health. Small quantities of adhesives and sealants used in the product are cured and present no known hazards. The following substances are also present.

Insulation and Seals

Material - Ceramic Fibre. Alumino - Silicone Fibre.
Description - Boards, Ropes, Gaskets.

Known Hazards - Some people can suffer reddening and itching of the skin. Fibre entry into the eye will cause foreign body irritation. Irritation to respiratory tract.

Precautions - People with a history of skin complaints may be particularly susceptible to irritation. High dust levels are only likely to arise following **harsh** abrasion. In general, normal handling and use will not present discomfort, follow good hygiene practices, wash hands before consuming food, drinking or using the toilet.

First Aid - Medical attention must be sought following eye contact or prolonged reddening of the skin.

Electricity Supply

A 230 volts ~ 50Hz, single phase electricity supply fused to 3A, must be provided in accordance with the latest edition of the IEE Wiring Regulations and any other local regulations that apply. The current rating of the wiring to the boiler must exceed 3 A and have a cross sectional area of at least 0.75mm in accordance with BS 6500, Table 16.

The supply to the boiler and its associated equipment should be controlled by an exclusive 3A fused double pole switch (having at least 3mm contact separation in both poles) so that complete isolation from the supply can be achieved to enable servicing work to be carried out in safety.

Gas Supply

A gas supply pressure of 20mbar is required at the inlet of the appliance. Performance data is based on use of reference gas G20. The meter and supply pipes must be capable of delivering this quantity of gas in addition to the demand from any other appliances in the house and must be governed at the meter.

Condensate Drain

The condensate outlet on the boiler is designed to accept 21.5mm (¾") plastic overflow pipe, which if possible should discharge into the household drainage system and have an internal termination. If this is not practical, discharge into an outside gully or soak away is acceptable. To avoid blockage of this pipe due to freezing it should be routed internally where possible and have sufficient fall over its entire length to dispose of condensate quickly. See British Gas 'Guidance Notes for the Installation of Domestic Gas Condensing Boilers'.

Location of Boiler

These boilers are not suitable for external installation and should not be fitted directly above a cooking appliance. The boiler may be installed in any room, although particular attention is drawn to the requirements of the current IEE Wiring Regulations and in Scotland, the electrical provisions of the Building Standards applicable in Scotland with the respect to the installation of the appliance in a room containing a bath or shower.

Where a room-sealed appliance is installed in a room containing a bath or shower, any electrical switch or appliance control, utilising mains electricity should be so situated that it cannot be touched by a person using the bath or shower.

Where the installation of the boiler will be in an unusual position, special procedures may be necessary and BS6798 and BS5546 give detailed guidance on this aspect.

It should be noted that due to the high efficiency of this boiler a white plume of condensate will be emitted from the flue terminal, therefore care should be taken when selecting the terminal position.

Boiler Mounting Surface

The boiler must be mounted on a flat wall, which may be of combustible material and must be sufficiently robust to take the weight of the boiler. The requirements of the Local Authorities and the Building Regulations must be adhered to.

Timber Framed Houses

If the boiler is to be installed in a timber framed building it should be fitted in accordance with the British Gas publication- Part 19 - Building and Kitchen Work. If in doubt advice must be sought from the local region of British Gas or from Potterton Myson.

Clearances around the Boiler and Tank

The following minimum clearances must be maintained after installation for correct operation and servicing of the boiler and tank.

Front:	15mm (610mm for servicing)
Sides:	5mm each side
Top:	140mm (from top of boiler case)
Bottom:	120mm

Ventilation

The room in which the boiler is installed does not require a purpose provided air vent.

If the boiler is installed in a cupboard or compartment, permanent air vents are required in the cupboard or compartment, one at high level and one at low level, either direct to the outside air or to a room. Both high level and low level air vents must communicate with the same room or must be on the same wall to outside air. Both the high level and low level vent must each have a free area as stated below. The free area of each vent may be halved if the ventilation is provided directly from outside.

High and Low air vent areas:

Envoy System 30	103 cm²
Envoy System 40	135 cm²
Envoy System 50	170 cm²
Envoy System 60	206 cm²
Envoy System 80	277 cm²

If the boiler is installed in a cupboard or compartment with a door, allow at least 15 mm clearance between the front of the boiler and the door for air movement.

Flue Terminal and Ducting

The **Standard Horizontal Flue** system (Part No. 236346) is suitable for installations up to 1030mm, measured from the centre line of the boiler outlet to the outside face of the wall.

0.5 & 1 Metre Flue Extension kits (0.5m - Part No. 430092, 1m - Part No. 430085) are available to extend horizontal flues to a maximum length of 2920 mm and vertical flues to a maximum length of 3 metres. The siting positions for horizontal flue terminals are shown in Fig. 3.

A **Concentric Vertical Flue** system is available (Part No. 236348) when used in conjunction with the 0.5 & 1 Metre Flue Extension kits and is suitable for flue heights up to 3 metres to terminate through a roof.

The siting of the flue terminal through a roof is shown in Fig. 3.

Only the flue systems shown here can be fitted to the Envoy System boilers.

As with all condensing boilers, the flue will produce a plume of visible condensation for much of the time that the boiler is running.

Care must therefore be taken in the siting of the terminal so as not to be a nuisance to adjacent property.

In particular, prolonged wetting of a facing wall should be avoided, if necessary by use of an appropriate deflector.

If the terminal is fitted less than 2m (6.6 ft) above a balcony, above ground or above a flat roof to which people have access then a suitable terminal guard must be provided and fitted.

A protective guard is available from the Potterton Myson Sales Office whose address and telephone number are shown on the rear cover. The guard (Part No 236591) must be securely fitted to the wall and centrally located over the flue terminal.

Where a flue terminal is installed less than one metre from a plastic, or painted gutter, or 500mm from painted eaves, an aluminium shield one metre long, should be fitted to the underside of the gutter or painted surface. A suitable wall plate should be fitted to the painted wall surface of a mobile home.

Installation Requirements - Page 7

It is absolutely ESSENTIAL to ensure that products of combustion discharging from the terminal cannot re-enter the building, or any other adjacent building, through ventilators, windows, doors, natural air infiltration, or forced ventilation/air conditioning. If products of combustion are found to be re-entering any building, the appliance MUST be turned OFF IMMEDIATELY.

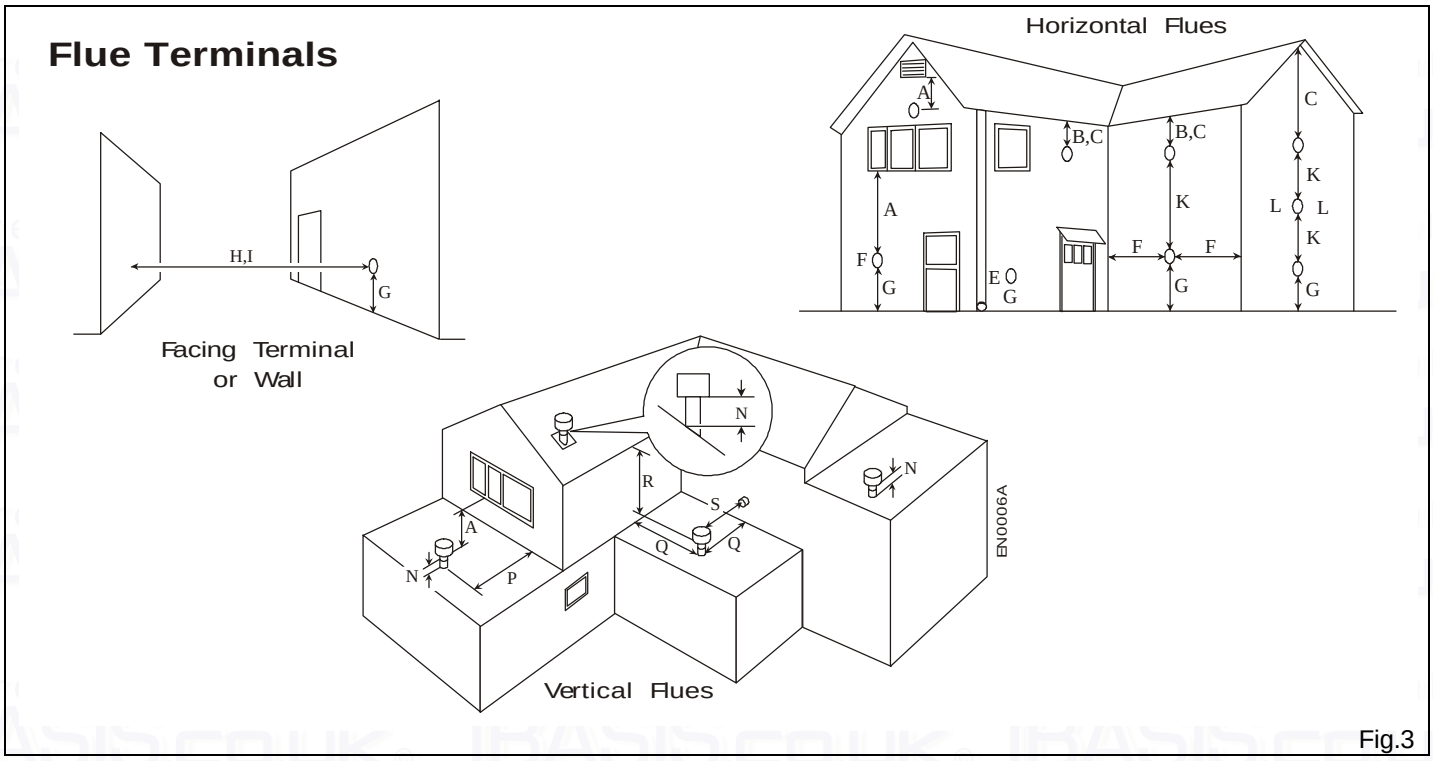

Fig.3

Terminal position	Minimum spacing
A - Directly below an openable window, air vent or any other ventilation opening	300 mm
B - Below gutters, soil pipes or drain pipes	75 mm
C - Below eaves (Horizontal Flue Only)	200 mm
* - Below balconies/Carport Roof	Not Recommended
E - From vertical soil pipes or drain pipes	75 mm
F - From an internal or external corner	300 mm
G - Above adjacent ground or balcony level	300 mm
H - From a surface facing the terminal	2000 mm
I - From a terminal facing the terminal	2000 mm
* - From opening (Door/Window) in carport into dwelling	Not Recommended
K - Vertically from a terminal on the same wall	1500 mm
L - Horizontally from a terminal on the same wall	300 mm
M - Adjacent to opening	300 mm
N - Above roof level (to base of terminal)	300 mm
P - From adjacent wall to flue	300 mm
Q - From internal corner to flue	400 mm
* - Below eaves or balcony (Vertical flue)	Not Recommend
S - From facing terminal	2000

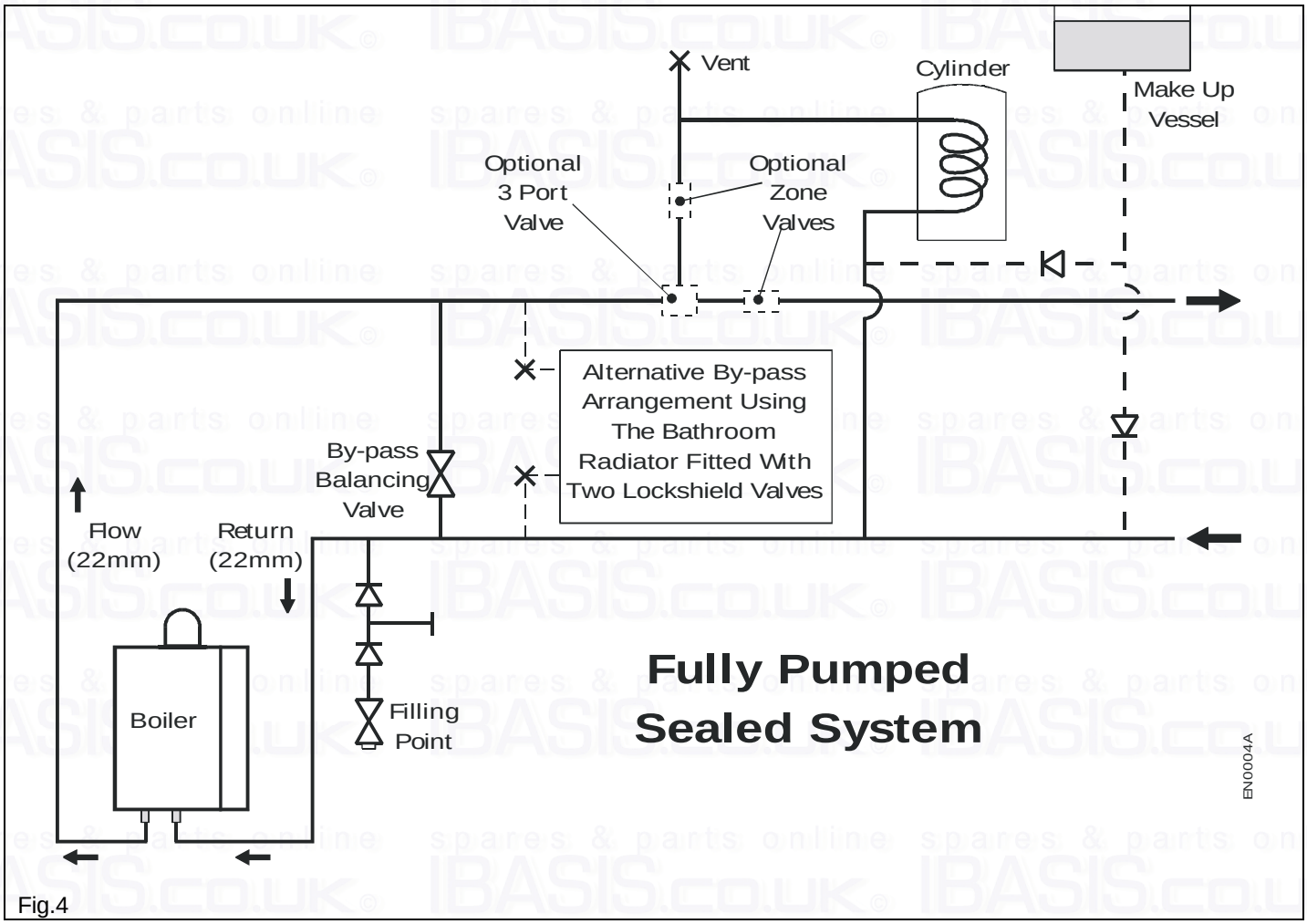

Fig.4

The System

The Envoy System boiler has an aluminium alloy heat exchanger, therefore all systems must be thoroughly cleansed and the correct treatment added to the system water.

The only system additives recommended by Potterton Myson Ltd. are FERNOX-COPAL or GRACE DEARBORN - SENTINEL X 100 and should be used in accordance with the manufacturers instructions. This will include use of the appropriate system cleanser.

The boiler must only be used on INDIRECT FULLY PUMPED SEALED Systems.

To ensure sufficient pump head is available on the 80 model to overcome system resistance, a system differential of 14°C should be allowed for when sizing radiators.

Where the the D.H.W & C.H circuits are controlled by two 2 port zone valves as illustrated or where all radiators may be controlled by thermostatic radiator valves a by-pass must be fitted.

Drain off taps should be fitted in the pipework close to the boiler and at all low points of the system.

Note: Although the system can be emptied using the drain off taps installed in the pipework around the system, to empty the heat exchanger it is necessary to remove the drain off cap positioned within the boiler case.

Installation

The installation must comply with the requirements of BS 6798: 1987 and BS 5449: Pt 1.

The British Gas publication "British Gas Specification for Domestic Wet Central Heating Systems" should also be consulted.

The following components are incorporated within the appliance.

a) Circulating pump.
b) Diverter valve (Optional Extra).
c) Pressure Relief valve with a non-adjustable pre-set

lift pressure of 3 bar (45 psi).

d) Pressure gauge covering the range 0-4 bar (0-60 psi).

e) 13.5 litre expansion vessel with initial charge pressure of 1.0 bar (14 psi).

Ancillary pipework, not forming part of the useful heating surface, should be lagged to prevent heat loss and any possible freezing, particularly where pipes run through roof spaces and ventilated under-floor spaces.

The expansion vessel on this appliance is suitable for central heating systems up to 135 litres. For systems greater than this, an additional expansion vessel will be required.

Mains Water Feed: Central Heating

A connection must be incorporated into the central heating system to facilitate filling. There must be no direct connection to the mains water supply, even through a non-return valve, without the approval of the Local Water Authority.

Permissible Methods of Filling

(**1) Direct Method** (Fig. 5)

A detachable flexible hose is connected to a stop valve fitted to an outlet on the service main. The other end of the hose is connected to a second stop valve and a double check valve. The double check valve is fitted to an inlet connection on the central heating return pipe under the appliance. The hose should be disconnected after filling. Where the mains pressure is excessive a pressure reducing valve could be used to make filling easier. The following fittings shall form a permanent part of the system and shall be fitted in the order stated.

a) A stop valve complying with the requirements of BS 1010 Part 2, (the temporary hose from the draw off tap shall be connected to this fitting).

b) Double check valve of an accepted type.

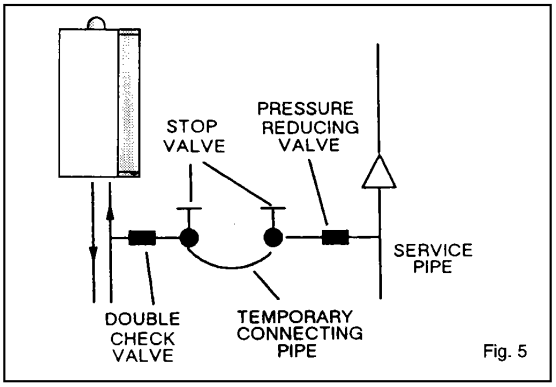

Fig. 5

(**2) Booster Pump Method**

The system may be filled through a self contained unit comprising a cistern, pressure booster pump and if necessary, an automatic pressure-reducing valve or flow restrictor.

The pressure booster pump must be capable of pressurising the system to a minimum of 1.0 bar (14 p.s.i.) measured at the appliance.

The cistern should be supplied through a temporary connection from a service pipe or cold water distributing pipe. The unit may remain permanently connected to the heating system to provide limited water make-up.

Provisions for make up water

Provision should be made for replacing water loss from the system by re-pressurisation of the system. See section on Methods of Filling.

Reference should be made to British Gas Publications "Material and Installation Specifications for Domestic Central Heating and Hot Water".

Note: The pre-charge pressure of the expansion vessel is set at 1 bar, therefore, the cold fill pressure should be 1 bar.

Installation to an Existing Central Heating System

The boilers are designed to operate on a sealed system only, therefore if the existing system is of the open type it will have to be modified to comply with BS 6798.

Before installing a new boiler to an existing system flush out the old system with a recommended descaling/flushing agent at least twice.

Also check pipework and renew any corroded pipework or fittings. Valve glands must be re-packed or replaced wherever necessary and any defective controls replaced.

Pump

The variable speed circulating pump fitted within the appliance should be capable of satisfying most system requirements. Fig. 6 indicates the amount of pump head available for the system. The boiler resistance is already taken into account in this curve.

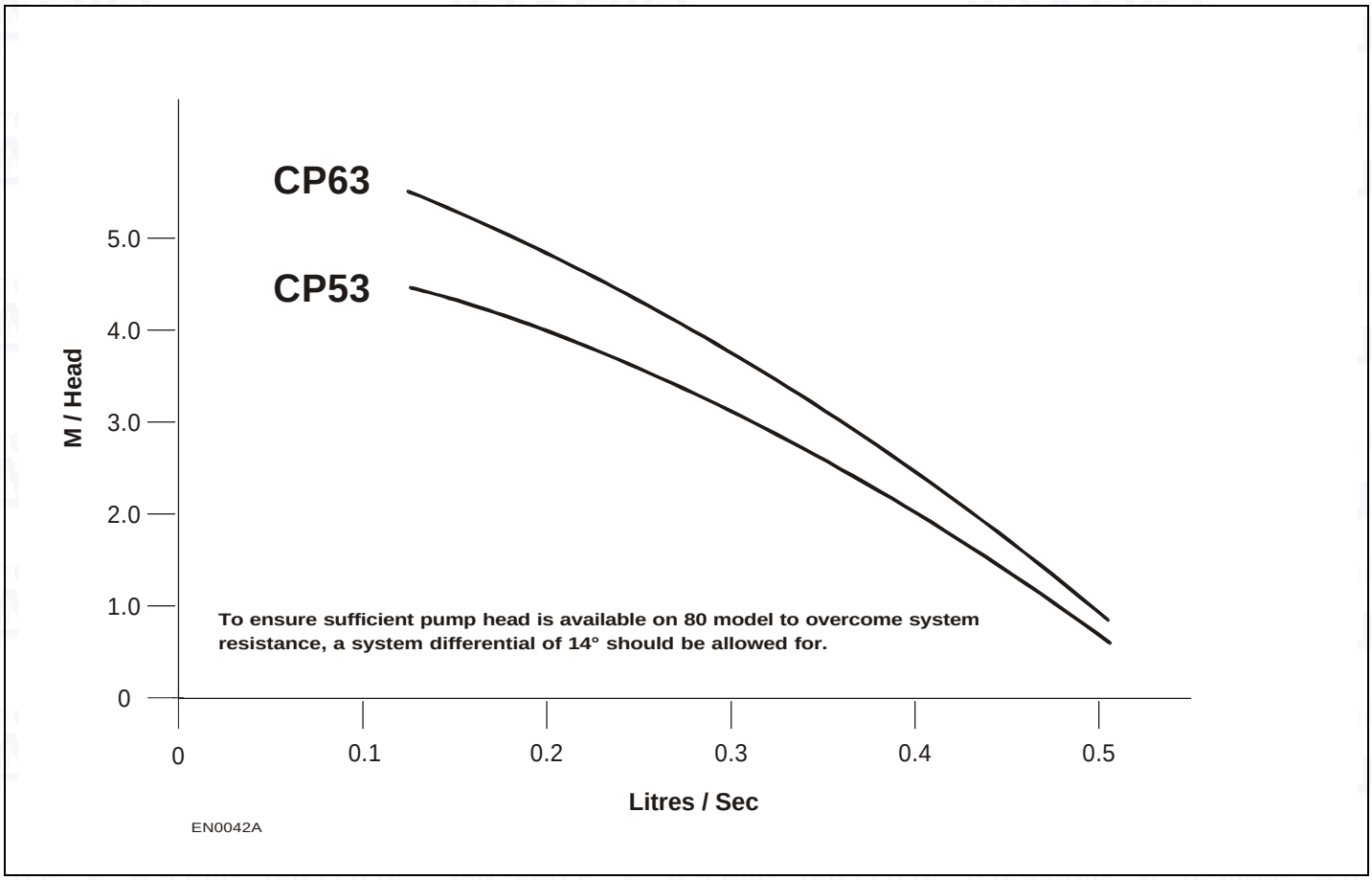

Boiler Size	Water Flow Rate Litres/sec	gal. min	System Differential
30	0.19	2.50	10ºC
40	9.25	3.34	10ºC
50	0.32	4.17	10ºC
60	0.38	5.00	10ºC
80	0.40	5.27	14ºC

2. Installation

It is the law that gas appliances are installed and serviced by a competent person as stated in the Gas Safety (Installation & Use) Regulations 1994.

Electrical test work should be carried out by a competent person in accordance with IEE wiring regulations.

The boiler and its associated equipment will arrive on site in 3 cartons. The contents will be as follows:-

Carton 1:- Boiler Pack

Boiler
Outer Casing Assembly
Accessory Pack

Carton 2:- Flue Pack

Flue System
Flue Installation Instructions

Carton 3:- Frame

Boiler Mounting Frame
Template
Screw Pack
Literature Pack

Installation

Taking due account of the terminal position and making allowance for all horizontal flues to rise at an angle of 3° (52mm per metre) from the boiler, place the template in proposed boiler position. Ensure the template is level and mark the ten fixing hole positions. If rear fluing mark flue outlet hole through template.

When side or vertical fluing extend flue outlet centre line on the template horizontally or vertically as appropriate and mark flue outlet hole on adjacent surface as illustrated. Vertical flues require a 105mm diameter hole unless extension kits are used when the hole size will need to be increased to 125mm to allow joining clamps to pass through.

Horizontal flues require a hole diameter of 125mm for all wall thicknesses providing the hole rises through the wall at an angle of 3°.

Where a horizontal hole is produced using a core drill the hole diameter will need to be increased for thicker walls as shown in the following table.

Hole Diameter	Maximum Wall Thickness
125mm	230mm
150mm	720mm
175mm	1000mm

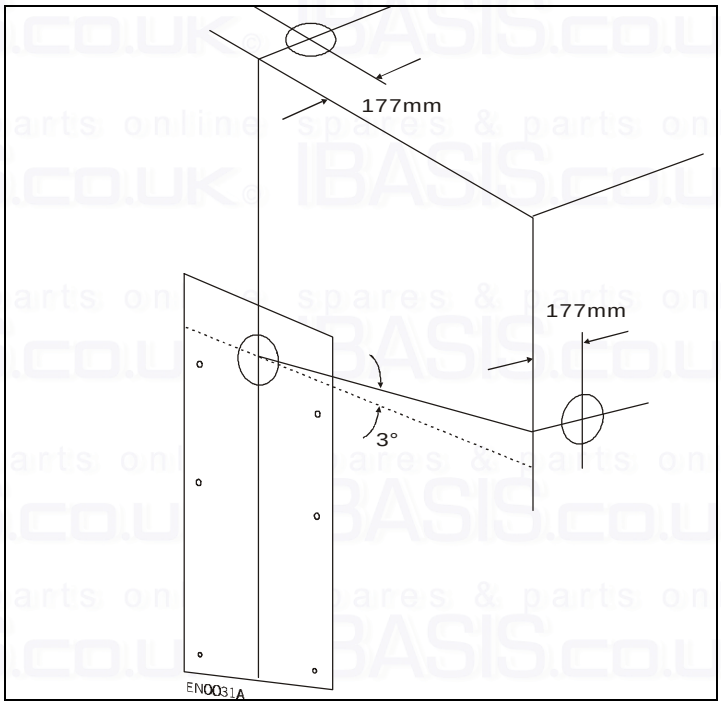

Remove template and drill holes using a 7mm drill. Carefully cut flue outlet hole through wall or ceiling allowing for any horizontal flue to rise at an angle of 3° throughout its length.

Using wall plugs and screws from accessory pack attach boiler mounting frame to wall ensuring that it is level.

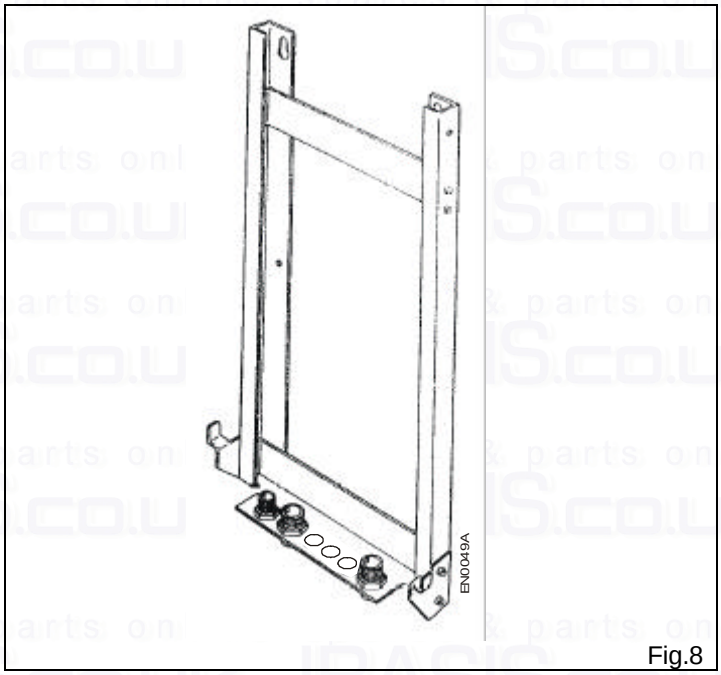

Fig.8

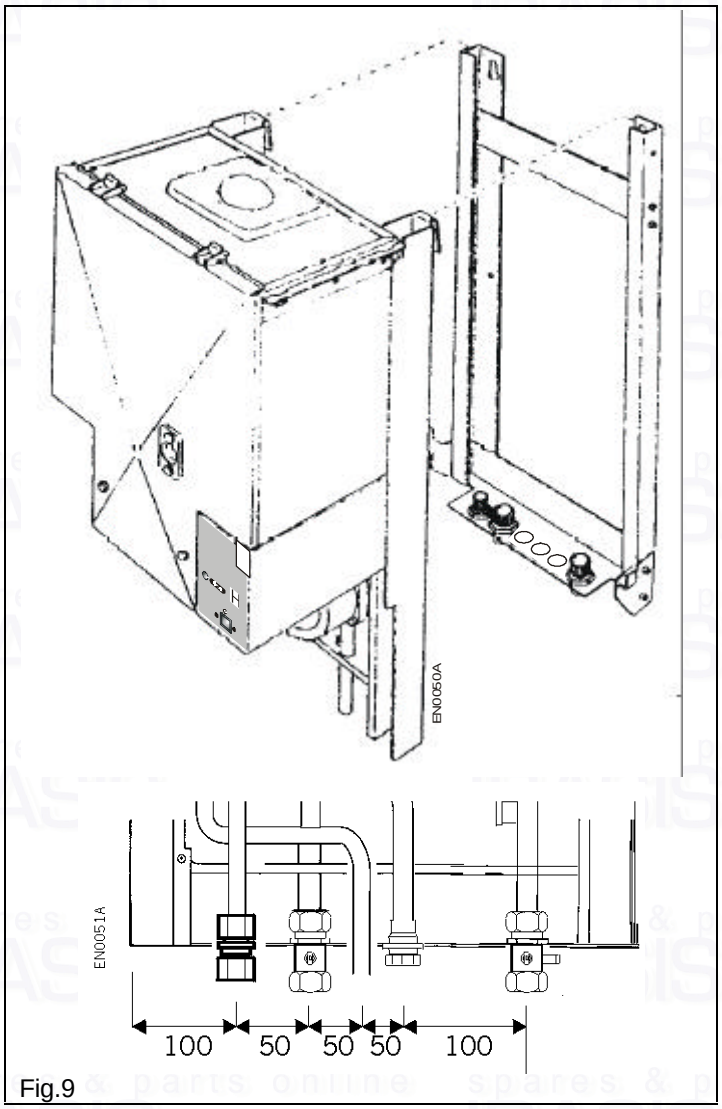

Fig.9

Remove functional case door by undoing the two lower securing screws and lift door off the two upper hinge brackets.

From the accessory pack, connect the fittings to the base of the mounting frames as shown - see Fig. 2 for guidance.

Slide the nuts and olives from the fittings onto the boiler pipes and temporarily tape them clear of the pipe ends.

Lift and hang the boiler onto the mounting frame ensuring the pipework at the base of the boiler locates into the fittings in the base of the mounting frame.

Connect the plastic condensate drain pipe to the mounting frame.

Connect system pipework to the base of the mounting frame as shown.

Connect the gas supply to the base of the mounting frame as shown.

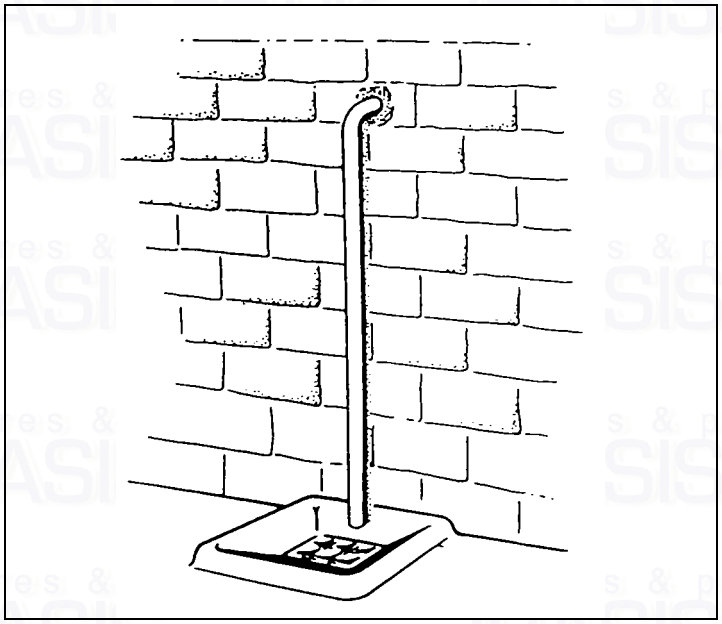

Pressure Relief Valve: The pressure relief valves is pre-set at 3 bar.

Install a pressure relief valve discharge pipe to the boiler valve, not less than 15 mm diameter and connect to the pressure relief outlet connection using a 15mm Compression fitting. The pipe run should be as short as possible, run continuously downwards and discharge to the outside of the building, where possible over a drain. The pipe end should be directed towards the wall. The discharge point must be such that it will not be hazardous to occupants or cause damage to external electrical components or wiring.

IT MUST NOT DISCHARGE ABOVE AN ENTRANCE, OR WINDOW, OR ANY TYPE OF PUBLIC ACCESS. THE INSTALLER MUST CONSIDER THAT THE OVERFLOW COULD DISCHARGE BOILING WATER.

Flue System

Assemble and attach the flue system to the boiler by following the instructions supplied with the flue kit.

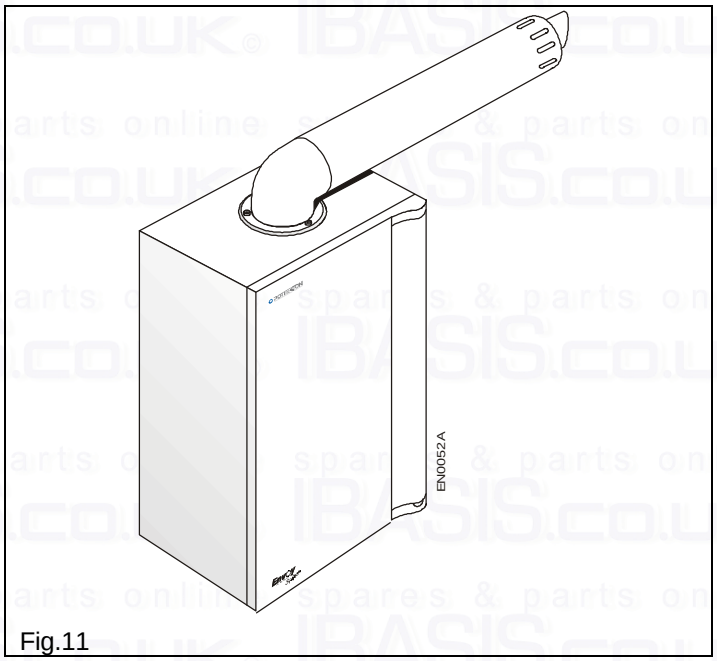

Fig.11

Electrical Connections

The boiler and all external control circuit wiring must be supplied from the same isolating switch or plug and socket.

The boiler terminal block which is situated in the control box is not designed to accept wiring from all the on-site controls therefore the installer will need to incorporate an external junction box.

Remove the securing screw and lower the expansion vessel.

Open the control box by removing the two M4 securing screws and lowering the access door as illustrated.

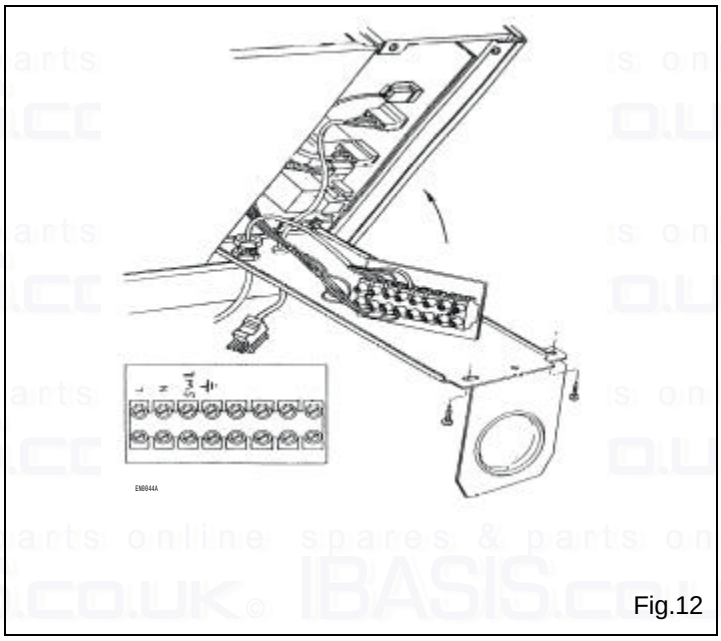

Fig.12

Electrical Wiring

Route a four core cable from the external junction box through the cable clamp in the underside rear of the control box and connect to boiler terminal block as follows.

Permanent live to terminal marked L
Neutral to terminal marked N
Earth to terminal marked ⏚
Switched live from external controls to terminal marked SwL

If there are no external controls fitted connect SwL terminal to permanent live in the junction box.

Note: The electrical mains supply must be fused at 3A and the connection must be made to the boiler terminals in such a way that should the lead disengage from the cable clamp, the current carrying conductors become taut before the earth conductor.

Close the control box and replace the two M4 securing screws.

3. Commissioning - Page 14

All Systems

Note: The system can be filled using a sealed system filler pump with a break tank or by any other method approved by the Local Water Authority. Refer to 'THE SYSTEM' section Page 8 in these instructions, also BS.6798 1987.

Flush out the system thoroughly with cold water. Fill and vent the system until the pressure gauge registers 1.5 bar (21.5 lbf/in²). Examine for leaks. Raise the pressure until the safety valve lifts. This should occur within ± 0.3 bar of the preset lift pressure of 3 bar. Release water to attain the correct cold fill pressure.

The whole of the gas installation including the meter should be inspected and tested for soundness and purged in accordance with the recommendations of BS.6891.

Electrical testwork should be carried out by a competent person in accordance with the IEE Wiring Regulations.

Conduct a preliminary electrical test by checking: for short circuits, fuse failure, incorrect polarity, earth continuity and resistance to earth. If a fault has occurred on the appliance, the fault finding procedure should be followed. See Page 25.

Fit the functional case door into position by lifting it onto the top hinge brackets and secure it with the lower two fixing screws.

First Lighting

WARNING: Before lighting the boiler ensure that the functional case door HAS BEEN CORRECTLY FITTED and that the sealing strip fitted to the door is forming a tight seal with the main boiler casing.

Before proceeding to light the boiler, check that the external electricity supply to the boiler is switched off and that the boiler control switch is in the mid i.e 0 position.

Turn on the gas service cock.

Ensure that the boiler and radiator isolating valves are open.

Ensure the electronic timer if fitted, is in an 'ON' period (refer to the time control literature).

Ensure that the room and/or cylinder thermostats where fitted are set to a high temperature.

Switch ON the main electricity supply (character 0 will be displayed).
Note: The boiler is protected by an automatic frost Protection device, therefore if the water temperature within the boiler is below 5°C the character H will be displayed and the boiler will fire until a return temperature of 10°C is reached. The boiler will then shut down and the character 0 will be displayed.

Switch the boiler control switch to the “H” position and the character H will be displayed. After approximately 10 seconds the boiler should light. Due to the presence of air in the gas supply it is possible that the boiler will not light at the first attempt but will automatically cycle and make two further attempts. If the boiler still fails to light it will go to lockout indicated by the character F shown flashing on the display. If this should occur wait 10 seconds then press the lockout reset button and the boiler will go through another start sequence.

If the boiler fails to start after 1 or 2 attempts refer to fault finding section.

It should be noted that the boiler control continually monitors the temperature rise across the heat exchanger. Therefore if the system is not correctly vented, air passing through the pump may lead to boiler shut down with the character 2 being displayed. If this occurs, thoroughly vent the system and press the reset button.

Burner Pressure

This appliance is fitted with a Gas/Air ratio control valve. This gas valve ensures that the correct amount of gas is delivered to the burner to match the available air supply under all operating conditions.

THE BURNER PRESSURE AND GAS RATE HAVE BEEN PRECISELY SET AND CHECKED DURING MANUFACTURE AND NO ATTEMPT SHOULD BE MADE TO ADJUST IT.

To check the correct operation of the gas valve follow the instructions below carefully.

a. A good indication of correct operation of the boiler will be obtained by measuring the gas rate at the gas meter.

   1. Run the appliance for at least 10 minutes.

   2. With all other gas appliances turned off measure the gas rate at the meter for a period of at least 5 minutes. Check that the measured rate is within ±5% of the rate stated on the data plate.

b. To measure the burner pressure.

   1. Turn off the gas service cock. Fit a pressure gauge to the gas inlet pressure test point on the

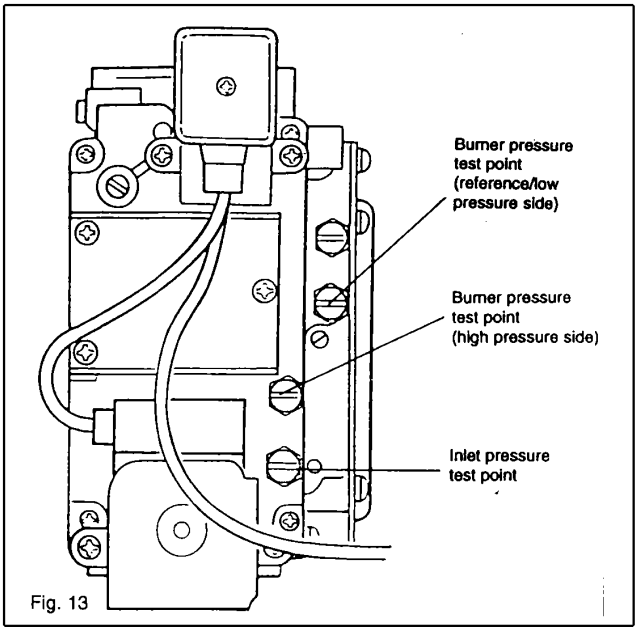

Fig. 13

gas control valve. Connect a differential pressure gauge or 'U' tube manometer between the burner pressure gauge test point (high pressure side) and the reference pressure test point (low pressure side) on the gas valve (see Fig. 11).

2. Turn on the gas service cock and run the appliance for at least 10 minutes. Check that the gas inlet pressure is between 19-20 mbar.

3. Check that the differential burner pressure is within ±1.0 mbar of that stated on the data plate.

4. Turn off the gas service cock and remove the pressure gauge and replace the pressure test point sealing screws on the gas valve.

Should the gas rate or differential burner pressure fall outside the specified range run the boiler for a further 10 mins and carry out a re-check, if after re-checking either the gas rate or the burner pressure falls outside the tolerance specified, Potterton Myson Service Department should be called as specialist equipment is required to enable adjustment to be made.

Relight the boiler and reheat the system to maximum. Check for water leaks, turn the boiler off, drain the system whilst hot.

Remove functional case door and ensure there are no condensate leaks from around the boiler or the condensate drainage system.

Refit functional case door ensuring a good seal.

Refill the system and add the correct concentration of FERNOX COPAL or GRACE DEARBORN SENTINEL X100 water treatment.

Adjust to the correct cold fill pressure (1 bar).

If a by-pass circuit is fitted the by-pass valve should be adjusted with the boiler operating under minimum load conditions to maintain sufficient water flow through the boiler to ensure that the overheat device does not operate under normal operating conditions.

Pump Overrun Timer

Will keep the pump running for approximately 3 minutes after burner shutdown to dissipate heat left within the boiler. The times are pre-set and no adjustment is possible.

Overheat Protection Device

The overheat protection device is pre-set and no adjustment is possible. Manual resetting is required if an overheat condition occurs. The reset button is situated in the front of the boiler control box.

Boiler Control Switch

In the mid i.e. "0" position holds the boiler in a standby condition. In the "L" position allows the boiler to operate automatically but controlled at a maximum flow temperature of 60°C. In the "H" position the boiler will operate automatically at a maximum flow temperature of 82°C.

Boiler Display

Under normal conditions of operation the following characters appear:-

Display not illuminated. All power off.

0 Power on, boiler at standby.

H Heat demand, boiler operating at higher flow temperature.

L Heat demand, boiler operating at lower flow temperature.

h Boiler operating but up to temperature.

t Boiler re-start delayed to prevent rapid cycling. (Max. delay time is 5 minutes)

c Main burner off, pump running to transfer remaining heat from boiler into the system.

F Flashing - boiler at Lock-Out

Other characters will be displayed if a fault condition should occur. Their purpose is to assist the service engineer and more information is provided in the SERVICING section of these instructions.

Other Boiler Controls

All boiler mounted controls are designed so that if any fault should occur they will fail safe. No further setting or checking is necessary.

Final Assembly

Attach casing side panels onto the boiler as illustrated (Fig. 14) ensuring that the three lugs on each panel are correctly located. Slide in the bottom panel and push fully home. Engage hooks on the top rear of the front panel into the slot in the top front corner of each side panel. Lower the front panel to engage brass studs into the retaining clips, press fully home to lock panel into position.

External Controls

Check that any other external control connected in the system, such as timers and thermostats, control the boiler as required.

User's Instructions

A User's Guide is provided with this boiler but the householder must have the operation of the boiler and system explained by the installer. The householder must also be advised of the importance of annual servicing and of the precautions necessary to prevent damage to the system and building, in the event of the system remaining out of commission in frost conditions. Information must also be passed to the customer on the type of corrosion inhibitor that has been added to the system and of the need to maintain the correct concentration levels as recommended by the manufacturer.

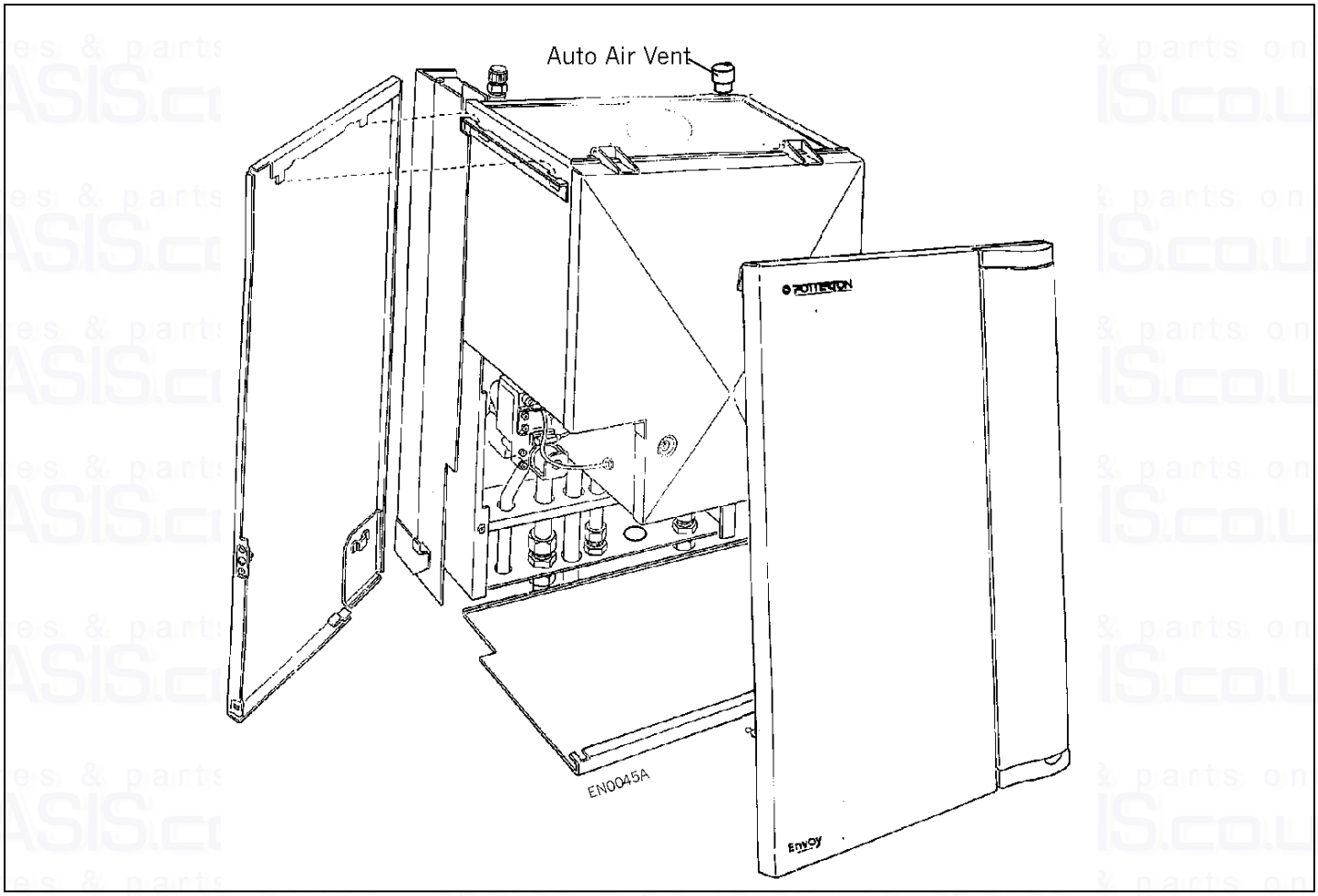

4. Servicing & Replacement of Parts - Page 17

It is the law that all gas appliances are installed and serviced by a competent person as stated in Gas Safety (Installation and Use) Regulations 1994.

For Health and Safety Information see Page 5.

Electrical test work and servicing should be carried out by a competent person in accordance with the I.E.E. Wiring Regulations.

Regular skilled servicing and cleaning of the appliance is essential to ensure continued safe and efficient operation.

The frequency of cleaning will depend upon the particular installation conditions, and the use to which the appliance is put, but in general, once a year should be adequate.

The boiler DATA PLATE and WIRING DIAGRAM are located on the front of the boiler functional casing.

The boiler code number which is on the code badge located on the boiler top panel see Fig.2 should always be quoted when ordering spares or requesting information.

Before commencing the servicing of the boiler it is advisable to carry out a pre-check on the boiler to establish that it is functioning correctly.

Preparation of the Boiler

Preparation for servicing should be carried out in the following manner.

1) Remove decorative outer casing doors by pulling the bottom of the door from its fixing clips and pushing upwards until it is clear of its top fixing.

2) Remove bottom decorative panel.

3) Remove functional case door by undoing the two lower securing screws and lift door off the two upper hinge brackets. Fig. 15.

a) Set boiler control switch to the mid i.e. "0" and the display should read "0".

b) Set boiler control switch to "H", the display should read "H" and the boiler should light.

Note: If the boiler fails to start or does not follow the sequence above then refer to fault finding section on Page 25.

WARNING

Before the start of any servicing or replacement of parts ensure that you have:

a) Switched off at the external electrical supply by removing the plug from the wall socket or by switching off the appliance at the external isolating switch.

b) Isolated the gas supply at the boiler service cock.

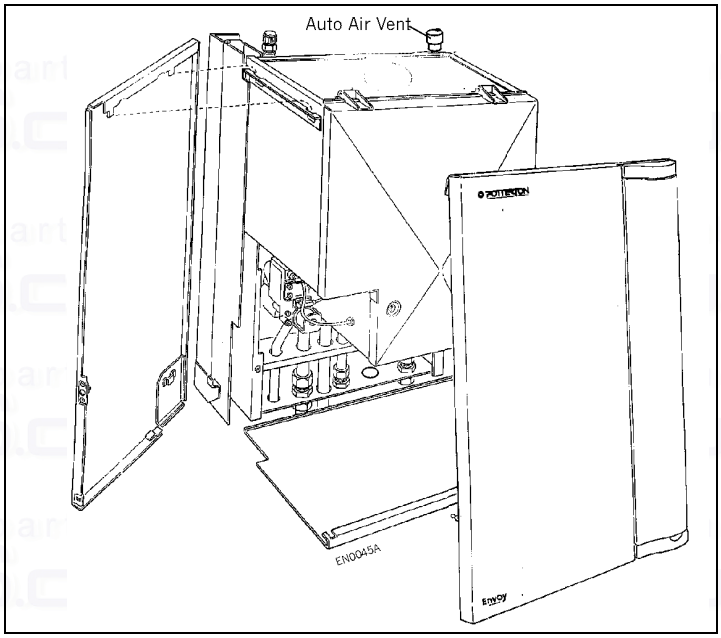

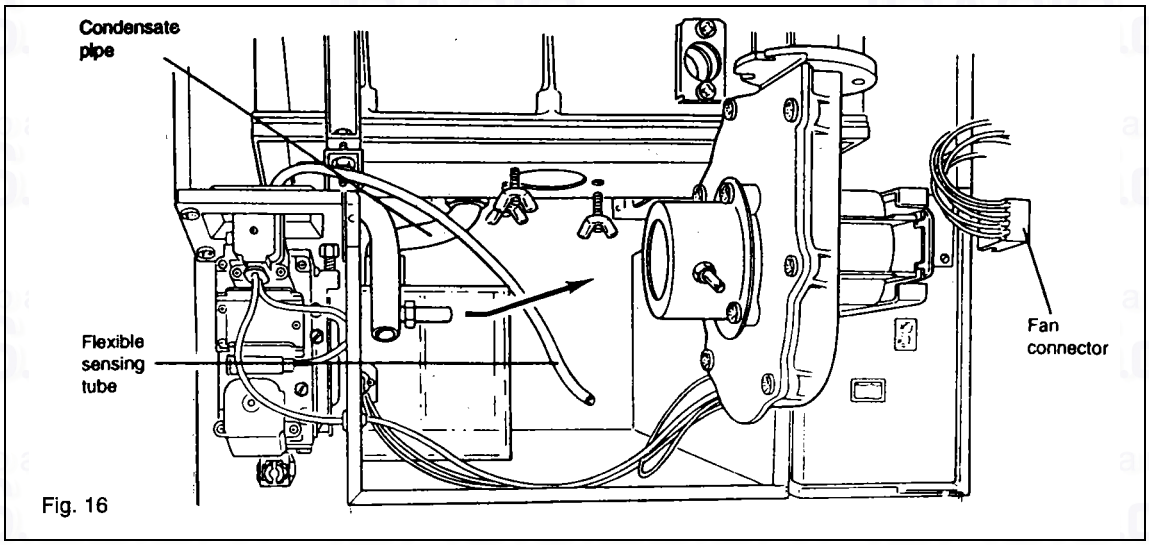

Fig. 16

Removing Fan

1) Disconnect electrical connection from fan motor. Fig. 16.

2) Disconnect flexible sensing tube from the fan inlet housing.

3) Remove fan by slackening two wing screws on left hand side and removing the M5 wing screw on the right hand side of the fan.

4) Slide fan to the right then forward and remove from boiler.

Removing Combustion Chamber & Flue Hood

5) Disconnect flexible condensate pipe from the rear of the combustion chamber/sump casting.

6) Disconnect inline connectors for the hot surface igniter and the flame sensor on the right hand side of the combustion chamber. Fig. 17.

Note the hot surface igniter is a fragile component and requires extreme care when handling.

7) Remove two M6 screws retaining clamps around flue hood and combustion chamber.

8) Remove the top clamps from their anchor points at the rear of the casing.

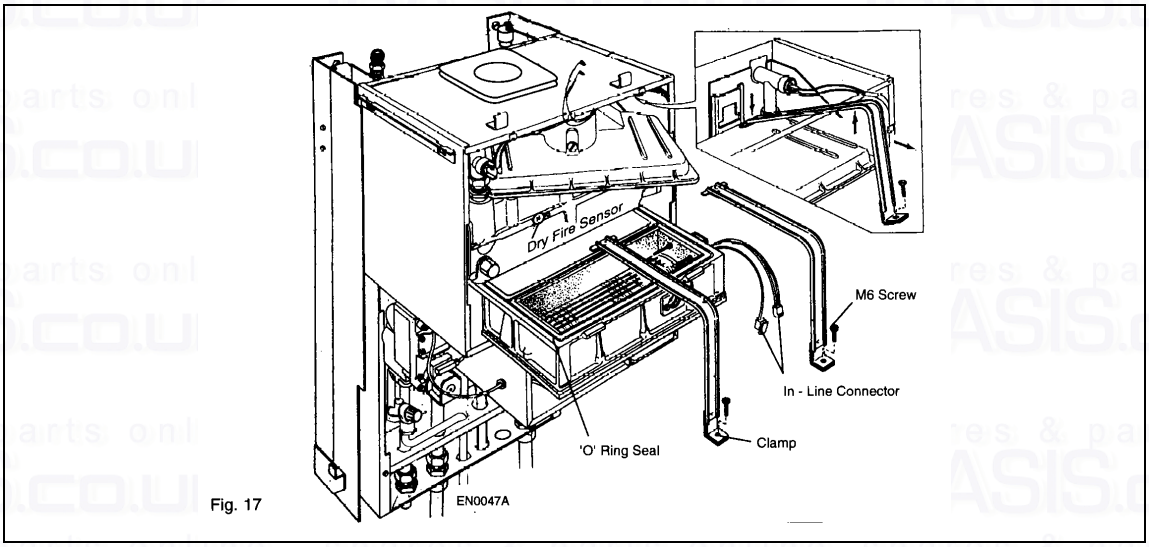

Fig. 17

Removing Combustion Chamber and Flue Hood - Continued.

9) Disconnect electrical connections from dry fire sensor. Fig. 17.
10) Fold back flue sealing gaiter between the flue hood and flue elbow. Fig.18.

11) Carefully remove flue hood by moving the right hand side of the flue hood forward and gently guide the hood around the flow tapping on the heat exchanger.

12) Pull combustion chamber forward until it is clear of the boiler casing.

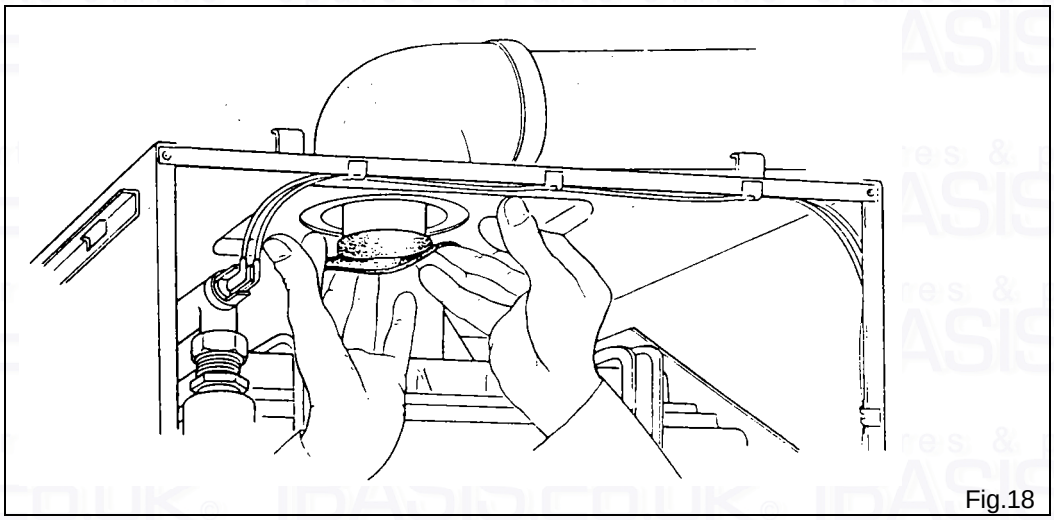

Fig.18

Examination of Flue Ways and Cleaning

1) Place a sheet of clean paper over the inlet of the condense syphon and the gas assembly. It is particularly important that debris is prevented from entering the short upward facing tube from the gas control valve.

2) Cleaning of the heat exchanger must be carried out using a Potterton scraper Part No. 907736.

3) Working from below and above the heat exchanger remove all deposits from between the fins.

4) Examine top and bottom sealing face of the heat exchanger for deep scratches and remove any debris with a soft brush to provide a smooth flat sealing face.

5) Examine Syphon for evidence of leakage or build up of debris.

Note: Place a catch tray beneath the syphon cleaning eye plug and remove plug this should remove any debris which has collected in the pipe section. If necessary the syphon should be removed and flushed with tap water. See replacement of parts for further information.

Re-assembly of Boiler

6) Before reassembling combustion chamber and flue hood to the boiler examine for the following:-

- The 'O' ring seals for damage
- The insulation in the combustion chamber. Note if there is any visible deterioration of this material it MUST be replaced
- Damage to the hot surface igniter
- Damage to the surface of the burner
- Damage to sight glass
- Build up of debris in the condensate sump (This may be removed with a soft brush)

If any of the above components require changing see section 'Replacement of Parts' for further information.

7) Replacement of components is the reverse of removal.

Note: great care should be taken not to damage the flue hood and combustion chamber seals during replacement of these assemblies.

8) When refitting retaining clamps ensure that they are located correctly in the guides on both the flue hood and combustion chamber.

9) Ensure that the combustion chamber seats correctly onto the heat exchanger, that the screws are fully tightened and that the clamps fix the combustion chamber and flue hood securely.

10) Ensure connection from sump to syphon is made before refitting fan.

11) Ensure that the flue sealing gaiter between the flue hood and elbow is correctly positioned untwisted and forms a good seal to both components.

12) Relight the boiler as described by following the lighting procedure in the commissioning section of these instructions.

Replacement of Parts

Before replacing any component carry out pre-check detailed at the beginning of the Service section and then refer to fault finding section of these instructions.

WARNING
Before the start of any servicing or replacement of parts ensure that you have:

a) Switched off at the external electrical supply by removing the plug from the wall socket or by switching off the appliance at the external isolating switch.

b) Isolated the gas supply at the boiler service cock.

If the combustion chamber has been removed follow procedure in Service section 'Re-assembly of boiler'

1) Fan

a) Follow procedure in 'Preparation for servicing' at the beginning of the servicing section.

b) Replacement of fan is the reverse of removal.

2) Hot Surface Igniter

WARNING This component is fragile and requires careful handling.

a) Remove combustion chamber as described in **'Servicing Boiler'**.

b) The igniter assembly is retained by two M5 pozi drive screws. Remove screws and carefully remove old igniter, if the igniter has become damaged, invert the combustion chamber and shake gently to allow damaged segments to be removed from the chamber. See Fig. 19.

c) Replacement of the igniter is the reverse of removal ensure that a new sealing gasket is always fitted and that a good seal is made between the igniter and combustion chamber.

3) Flame Sensor

a) Remove combustion chamber as described in **'Servicing Boiler'**.

b) Remove screw retaining sensor and withdraw from the combustion chamber. See Fig. 19.

c) Replacement of the sensor is the reverse of removal, ensure new gasket is always fitted.

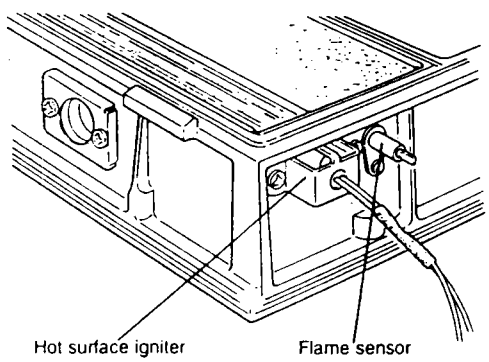

Fig. 19

4) Insulation

Note: all four insulation pads must be replaced.

a) Remove combustion chamber as described in **'Servicing Boiler'**. See Fig. 17.

b) Remove hot surface igniter, flame sensor. Fig. 19 and burner Fig. 20.

c) Remove old insulation.

d) Replace front pad first ensuring that bevelled edge is uppermost and fits into the chamber correctly.

e) Fit rear pad and use end insulation to retain rear pad.

4) Insulation (Continued)

f) Carefully replace burner.

g) Refit hot surface igniter and flame sensor.
WARNING This component is fragile and requires careful handling.

h) Replacement is the reverse of removal.

5) Burner

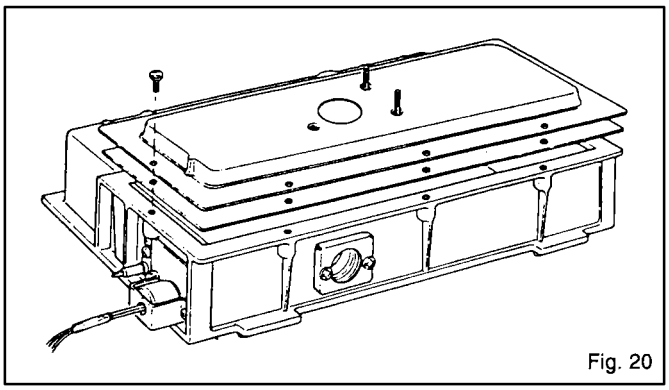

Fig. 20

a) Remove combustion chamber as described in **'Servicing Boiler'**.

b) Remove 8 M5 screws retaining burner to the combustion chamber. Fig. 20.

c) Remove burner from the combustion chamber.

d) Ensure the burner is fitted with the gasket supplied with it.

e) Taking care not to damage the burner surface, install new burner into combustion and secure with 8 screws.

f) Re-assemble as described in section **'Servicing Boiler'**.

6) Syphon

a) Remove decorative and functional doors as described in **'Servicing Boiler'**.

b) Remove fan see **'Servicing Boiler'**.

c) Disconnect flexible condensate pipe from the rear of the combustion chamber/sump casting. Fig. 16.

d) Disconnect syphon from its wastepipe.

e) Undo nut securing Syphon to the bottom of the boiler casing.

f) Replacement of the Syphon is the reverse of removal.

*See **Servicing Instructions** for re-assembly of boiler.*

7) Flue Hood/Combustion Chamber Seals.

a) Remove combustion chamber/fluehood as described in **'Servicing Boiler'** See Fig.17.

b) Remove old seal.

c) Clean groove using a soft brush or dry lint free cloth.

d) Ensure new seal is correct (flue hood and combustion chamber require different seals).

e) Lay seal over groove and gently push into the groove until fully home.

*See **Servicing Instructions** for re-assembly of boiler.*

8) Injector

a) Remove decorative and functional doors as described in **'Servicing Boiler'**.

b) Remove fan see 'Servicing Boiler'.

c) Remove injector by unscrewing from gas supply pipe.

d) Replacement is the reverse of removal.

9) Gas Valve Assembly

a) Remove decorative and functional doors as described in **'Servicing Boiler'**.

b) Remove fan as described in **'Servicing Boiler'**.

c) Disconnect electrical supply lead at the gas valve by removing the two retaining screws and unplug.

d) Remove 4 M5 screws securing gas control valve to boiler service cock.

e) Remove 6 M5 screws retaining gas assembly mounting plate 4 M5 on the left underside of the plate and two within the casing. Remove M5 screw attaching the valve to its mounting bracket.

f) Slide gas assembly forward and remove from boiler.

g) Remove flexible tube from assembly and fit to new gas assembly.

h) Replacement is the reverse of removal ensuring a new gasket is fitted between casing and mounting plate and the 'O' ring seal is correctly positioned between the gas control valve and the boiler service cock.

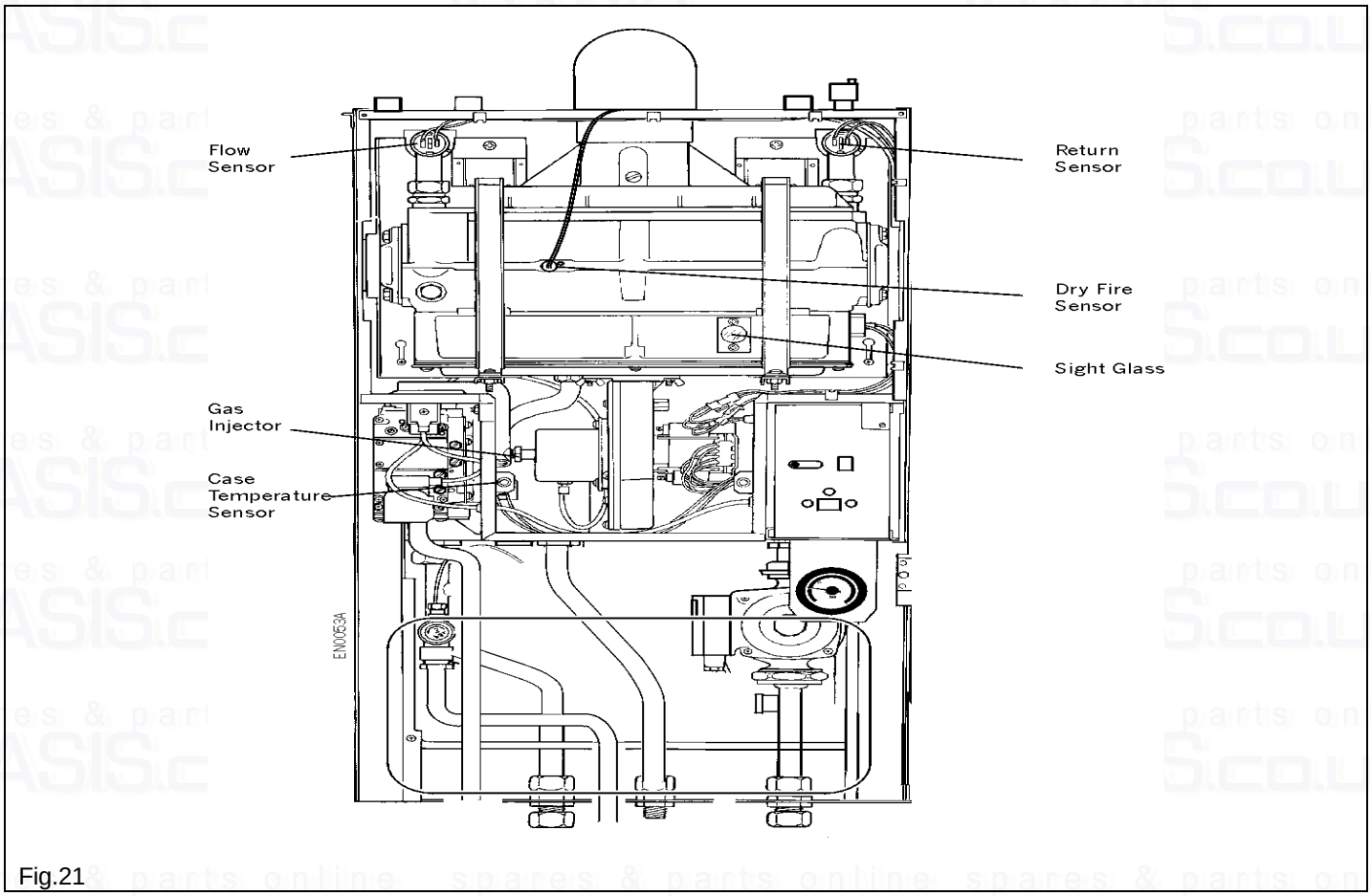

Fig.21

10) Sight Glass (combustion chamber or case door).

Note: Care should be taken when handling and disposing of broken glass.

a) Remove decorative casing door if changing functional door sight glass or both decorative and functional doors if changing combustion chamber sight glass, as described in **'Servicing Boiler'**.

b) Remove two screws retaining sight glass assembly and carefully remove from the combustion chamber or door.

c) Replacement is the reverse of removal ensuring a new gasket is fitted either side of the glass.

11) Water Temperature Sensor (flow and return).

a) Remove decorative and functional doors as described in **'Servicing Boiler'**.

b) Disconnect two leads from the sensor and remove it by gently squeezing two protruding plastic lugs and while still squeezing pull from its housing.

c) Replacement is the reverse of removal ensure when fitting new sensor that sensor tip is coated with heat conducting paste and that it is correctly located and firmly home in its housing.

12) Dry Fire Temperature Sensor.

a) Remove decorative and functional doors as described in **'Servicing Boiler'**.

b) Disconnect two grey leads from the sensor.

c) Remove retaining screw and gently pull sensor from the heat exchanger.

d) Replacement is the reverse of removal. Ensure that the sensor tip is coated with conductive paste and correctly located in its housing.

13) Case Temperature Sensor.

a) Remove decorative and functional doors as described in **'Servicing Boiler'**.

b) Disconnect two yellow leads from the sensor.

c) Remove fixing screw from mounting bracket.

d) Remove sensor

e) Replacement is the reverse of removal.

14) Diverter Valve Head (If Fitted).

a) Remove decorative door and base panel as described in **'Servicing Boiler'**.

b) Lower the expansion vessel to provide access.

c) Disconnect the diverter valve from the connections within the plastic junction box. release cable restraint.

d) Remove the two screws securing the diverter valve head to the main body and remove the head.

e) Fit the diverter valve head to the valve body ensuring that the shaft seats correctly. Secure the head in position with the two new screws supplied.

f) Connect the diverter valve connections in the junction box. Refit cable restraint.

15) Boiler Control Board.

IMPORTANT

Before replacing the control board refer to fault finding section of these instructions. The control should only be replaced if the diagnostic display indicates it is faulty.

a) Remove decorative door as described in **'Servicing Boiler'**.

b) Remove screw retaining access door on under side of boiler. Fig. 22.

c) Remove screw retaining control front panel and tray. Fig. 22.

d) Gently pull front panel forward removing connectors from the control as they become accessible. Fig. 23.

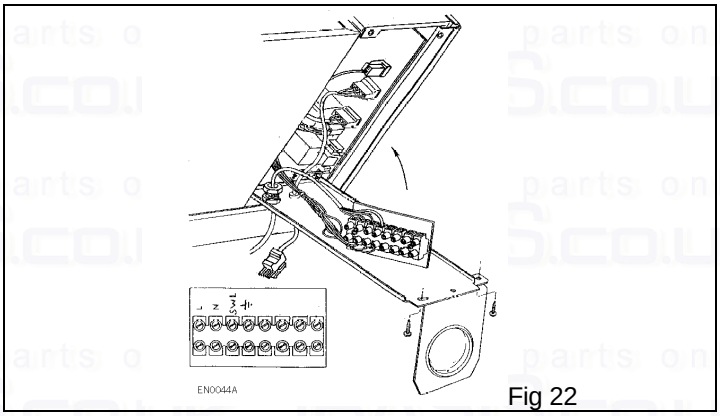

Fig 22

16) Boiler Control Board Fuses.

a) Remove decorative & functional doors as described in **'Servicing Boiler'**.

b) Remove screw retaining access door on under side of boiler. Fig. 22.

c) Remove screw retaining control front panel and tray. Fig. 22.

d) Gently pull front panel forward removing connectors from the control as they become accessible. Fig. 23.

e) Remove old fuse and replace with the correct Potterton component T - 3.15A (Part No. 933005).

f) Replacement is the reverse of removal.

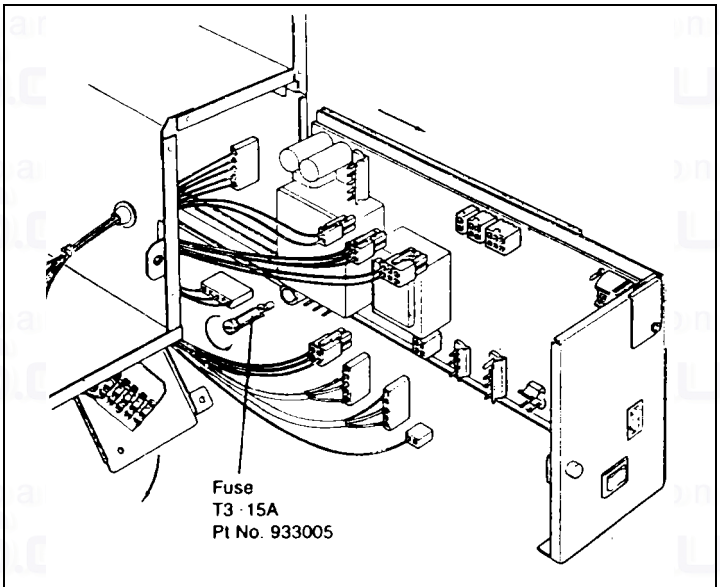

Fig.23

Error! Not a valid embedded object.

Fig.24

17) Water Components.

Replacement of Pump, Diverter Valve (If Fitted) and Water Pressure Gauge.

a) Remove decorative & functional doors as described in **'Servicing Boiler'.**
b) Remove blanking screw and attach a hose to the drain valve on the return pipe isolating valve.
c) Release system pressure by opening the pressure relief valve on the boiler flow pipe.
d) Turn off the isolating cocks on the flow and return pipe connections to the boiler and the boiler will drain.
e) Remove the clamping screw and lower the expansion vessel to provide access to the water components.

Pump:

f) Disconnect the in-line connector on the pump supply cable.
g) Undo the union nuts on the inlet and outlet connections and lift out the pump.
h) Replacement is the reverse of removal. New seals should be used on re-assembly.

Diverter Valve (If Fitted):

f) Disconnect the valve wiring from connections within the plastic junction box. Release the cable restraint.
g) Disconnect the electrical connectors from the water pressure switch.
h) Disconnect the pressure gauge connection from the pressure relief valve.
j) Disconnect the D.H.W flow pipe at the union nut above the diverter valve.
k) Disconnect the CH flow connection at the bracket where it connects with the heat exchanger pipe.
l) Disconnect the CH flow pipe from the isolating cock.
m) Disconnect the nut at the base of the pressure relief valve and swing the pipe out of the way.
n) Carefully lift out the assembly.
p) Replacement is the reverse of removal.

Water Pressure Gauge:

f) Disconnect the pressure gauge connector from the pressure relief valve.
g) Disconnect the pressure gauge from the bracket under the controls panel and remove the gauge.
h) Replacement is the reverse of removal.

5. Fault Finding - Page 25

Digital Display

This boiler is fitted with a single digit display which is located in the front control box behind the hinged door.

The display on which up to 30 different characters can be illuminated performs two functions.

1. By displaying the following characters provides the user with a visual indication of the current boiler operating status.

   0 Power supply switched on but waiting for a call for heat from secondary controls or boiler control switch is in the '..'' position.

   Boiler operating, high flow temperature selected.

   L Boiler operating, low flow temperature selected.

   h Boiler operating but up to temperature.

   t Boiler re-start delayed to prevent rapid cycling (Max. delay time 5 mins).

   c Main burner off, pump running to transfer remaining heat from boiler into the system.

   F Flashing - boiler at Lock-Out

   DISPLAY NOT ILLUMINATED - all power off.

2. By displaying the following characters it will assist the service engineer by working as a fault diagnosing system.

1	Sensor	Flow or return sensor out of calibration	See chart
2	Flow sensor	Flow sensor is incorrectly fitted	Check sensor
3	Case temperature	Temperature within boiler casing too high	See chart
4	Dry fire	Boiler has been fired without water	Check system
5	Flow sensor	Sensor failed open or closed circuit	Replace sensor
6	Return sensor	Sensor failed open or closed circuit	Replace sensor
7	Case sensor	Sensor failed open or closed circuit	Replace sensor
8	Dry fire sensor	Sensor failed open or closed circuit	Replace sensor
9	Fan speed	Fan speed incorrect	See chart
A	Shorted signal	Flame signal shorted to ground	Check igniter etc
C	Flame loss	Flame loss after initial detection	See chart
E	Control failed	Control has failed	Replace control
P	Wiring fault	Live on neutral connection	Correct fault

Preliminary Test Diagnostics

All boilers are fully tested before leaving the factory therefore if an electrical problem is experienced it is very likely that this is caused by faulty external wiring. If a problem exits, disconnect all site wiring from boiler. Connect a direct fused electrical supply to boiler terminals L, Swl, N & E.
If the boiler now operates correctly the site wiring should be investigated further.

FAULT FINDING CHART (1)

ENVOY

Electrical test work and servicing should be carried out by a competent person in accordance with the I.E.E. Wiring Regulations.

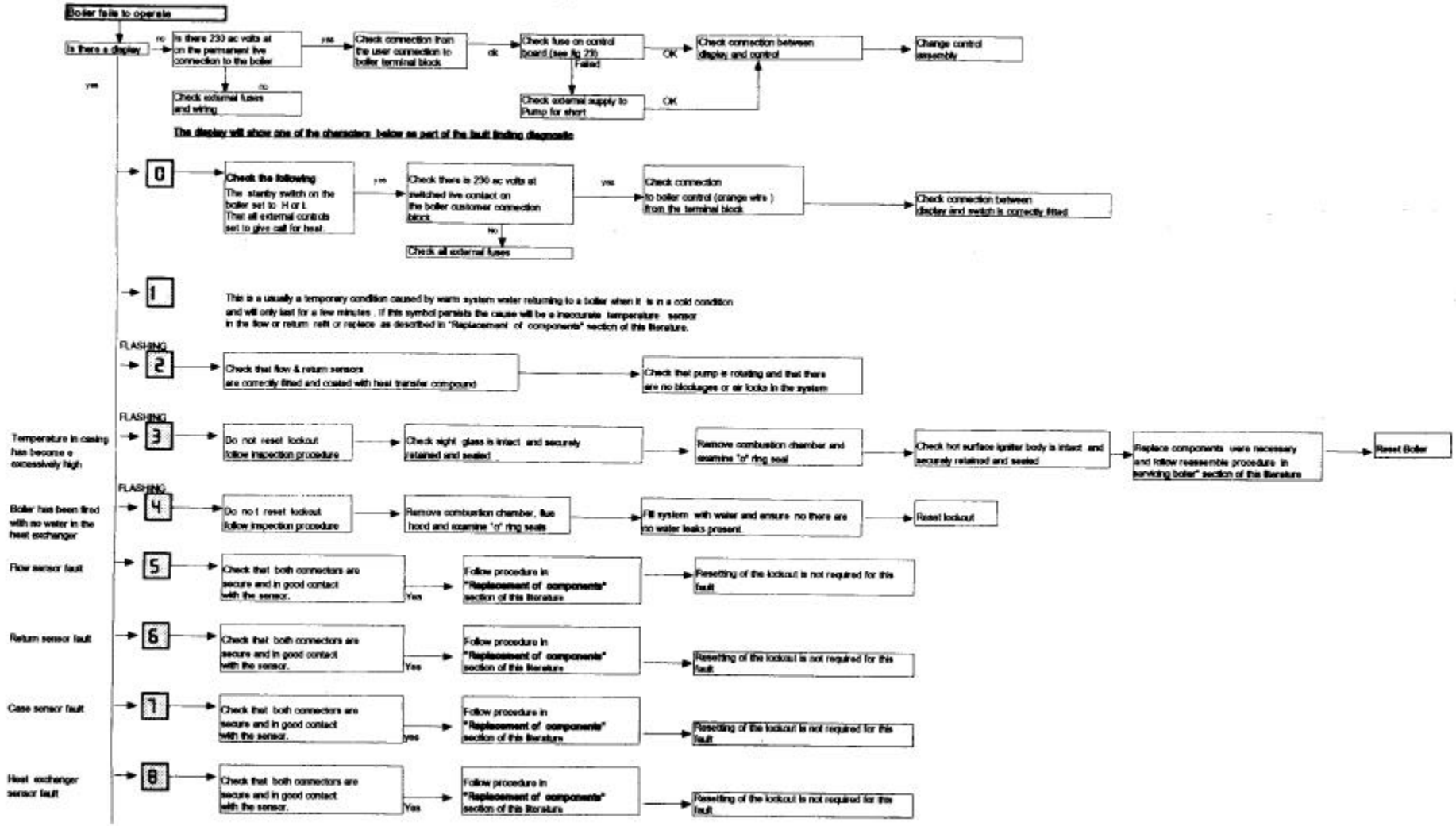

FAULT FINDING CHART(2)

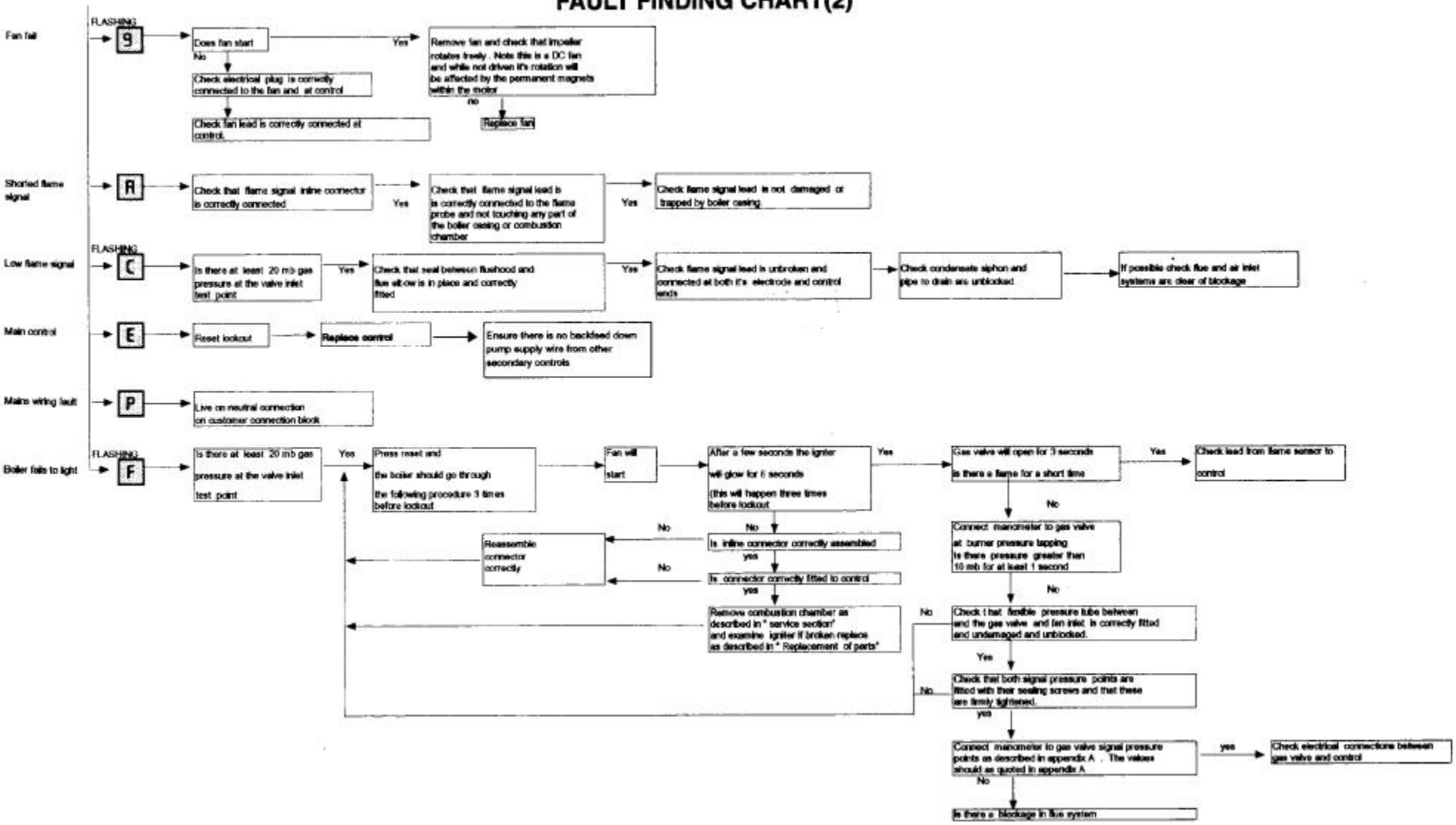

6. Boiler Internal Wiring - Page 28

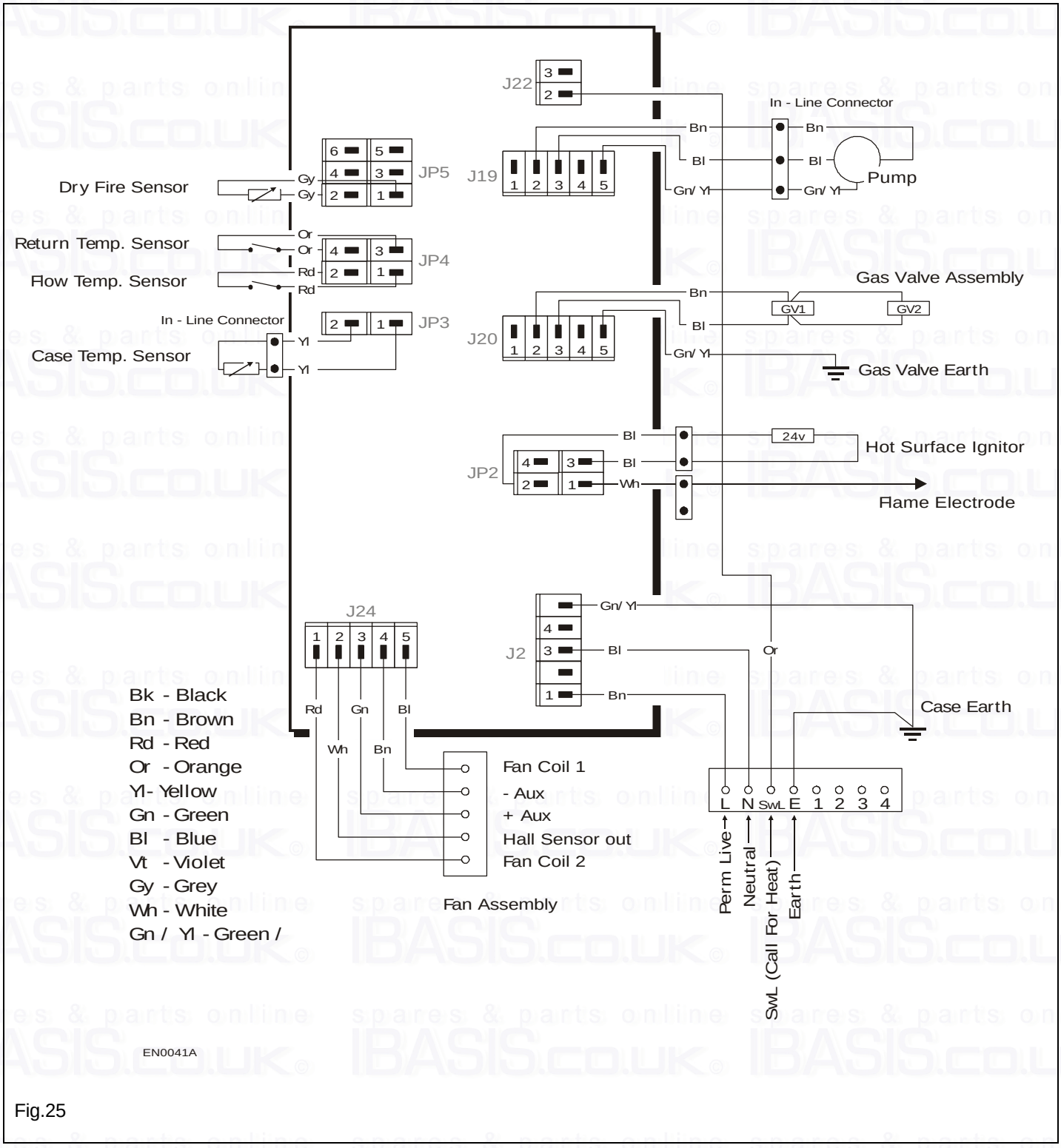

Fig.25

7. Boiler Wiring Layout - Page 29

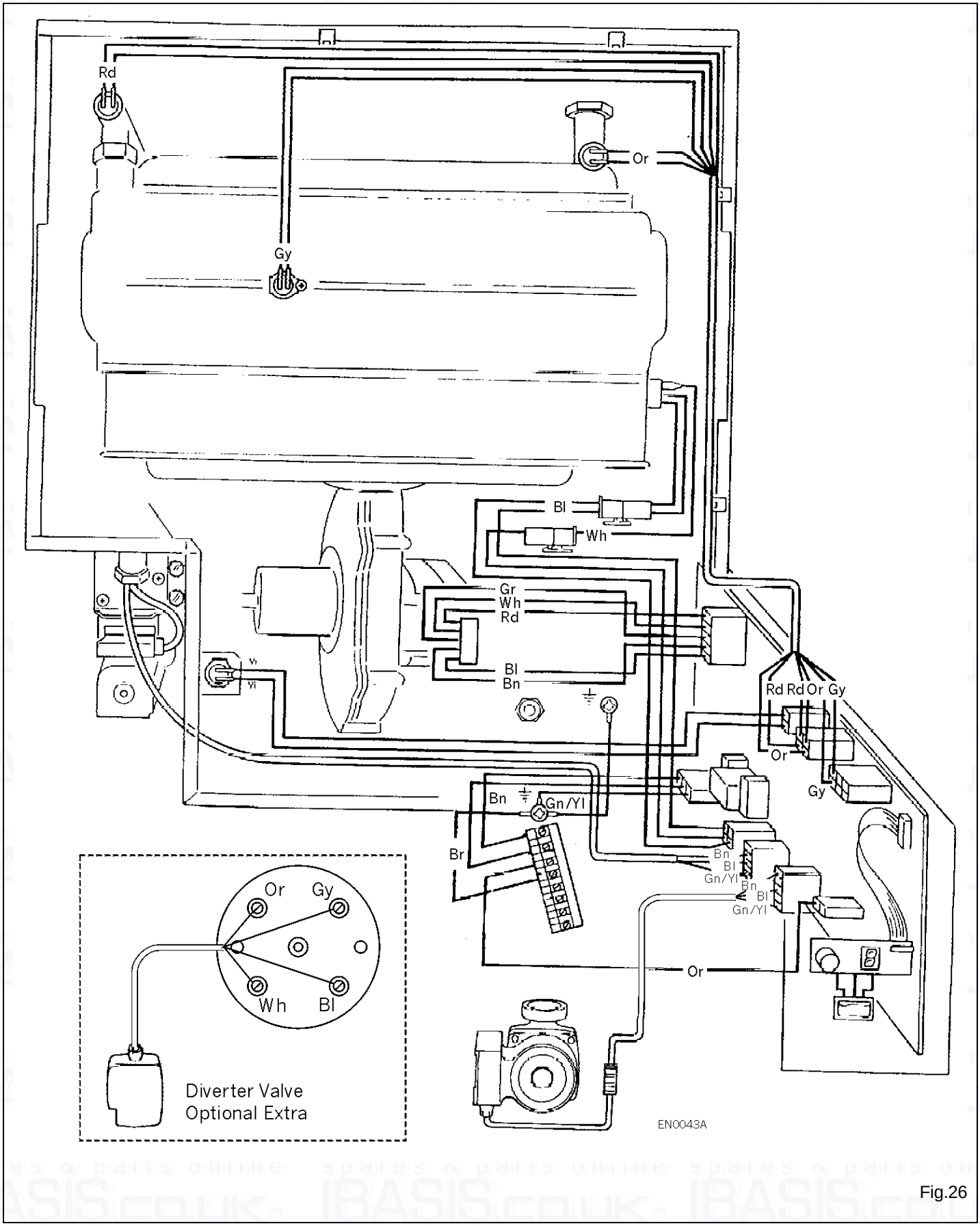

Fig.26

8. Short List Of Spare Parts - Page 30

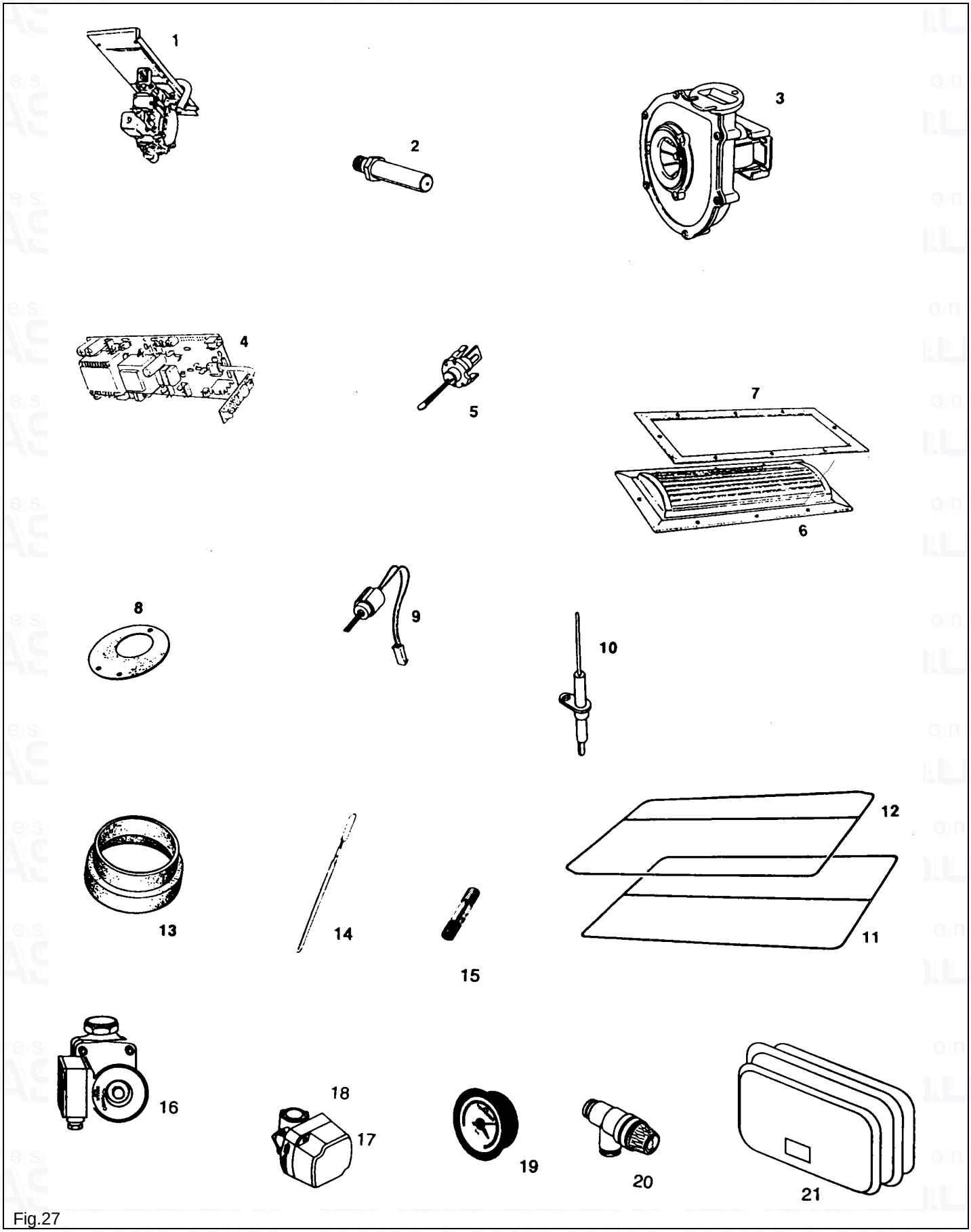

Fig.27

spares & parts online IBASIS.CO.UK

Short List of Spares - Page 31

Drg. Ref.	Description		Potterton Part No.	G.C. No.
1	Gas Valve Assembly	30 Boiler	930103	114 621
		40 Boiler	930104	114 622
		50 Boiler	930105	114 623
		60 Boiler	930106	114 624
		80 Boiler	930107	114 625
2	Injector	30 Boiler	411014	114 662
	Injector	40 Boiler	411007	114 663
	Injector	50 Boiler	411008	114 664
	Injector	60 Boiler	411009	114 665
	Injector	80 Boiler	411010	114 666
3	Fan	30, 40, 50 & 60 Boilers	409584	114 569
	Fan	80 Boilers	409585	114 570
4	Control Assembly		407734	114 629
5	Temperature Sensor		404513	378 868
6	Burner	30 Boiler	414727	378 870
	Burner	40 Boiler	414728	378 871
	Burner	50 Boiler	414729	378 872
	Burner	60 Boiler	414730	378 873
	Burner	80 Boiler	414731	378 874
7	Burner Gasket		236120	114 561
8	Fan Outlet Gasket		236253	114 596
9	Hot Surface Igniter		407728	378 869
10	Flame Sensor		407729	378 876
11	Combustion Chamber “O” Ring Seal		236123	114 556
12	Flue Hood “O” Ring Seal		236122	114 544
13	Flue Gaitor		236139	114 618
14	Flue Scraper		907736	337 862
15	Fuse T3. 15A (Not Illustrated)		933005	114 681
16	Pump CP53	30, 40,50 & 60 Boilers	411151	
	Pump CP63	80 Boilers	411153	
17	Diverter Valve		430065	
18	Diverter Valve Head			
19	Pressure Gauge		430101	
20	Pressure Relief Valve		430044	
21	Expansion Vessel		430052	

Burner pressure checking and adjustment procedure.

This appliance is fitted with a Gas/Air ratio control mixing valve. This gas valve ensures that the correct amount of gas is delivered to the burner to match the available air supply under all operating conditions. The burner pressure and gas rate have been precisely set and checked during manufacture and it is extremely unlikely that any further adjustment will be necessary.

To check the correct operation of the gas valve follow the instructions below carefully.

a. A good indication of correct operation of the boiler will be obtained by measuring the gas rate at the gas meter.

   1. Run the appliance for at least 10 minutes.

   2. With all other gas appliances turned off measure the gas rate at the meter for a period of at least 5 minutes. Check that the measured rate is within ± 5% of the rate stated on the data plate.

b. To measure the burner pressure.

   1. Turn off the gas service cock. Fit a pressure gauge to the gas inlet pressure test point on the gas control valve. Connect a differential pressure gauge or 'U' tube manometer between the burner pressure test point (high pressure side) and the reference pressure test point (low pressure side) on the gas valve (See Fig. 28).

   2. Turn on the gas service cock and run the appliance for at least 10 minutes. Check that the gas inlet pressure is between 19-20 mbar.

   3. Check that the differential burner pressure is within ± 1.0 mbar of that stated on the data plate.

   4. Turn off the gas service cock and remove the pressure gauge and replace the pressure test point sealing screws on the gas valve.

A burner pressure reading outside the specified range does not necessarily indicate a wrongly adjusted gas valve. Other factors i.e. insufficient air flow will cause the gas valve to automatically adjust the burner pressure to maintain safe combustion. Before attempting to adjust the gas valve a check must be conducted on the whole appliance to ensure that any other faults present are found and rectified.

Setting the Burner Pressure

Warning

Setting the burner pressure requires the following equipment.

Essential

1. A differential pressure gauge or “U” tube manometer capable of measuring pressures in the range 0-25 mbar (0-10" H_2O) with a resolution of 0.1 mbar (0.05“ H_2O).

2. A differential pressure gauge capable of measuring pressures in the range of 0-2.50 mbar (0-1.00“ H_2O) with a resolution of 0.01 mbar (0.005“ H_2O).

3. Sufficient flexible tube and “T” piece connector to enable these instruments to be connected to the gas valve in the arrangement shown in Fig. 28.

Advisable

A CO_2 analyser capable of measuring CO_2 concentrations in the range 0-15% with a resolution of 0.1%.

1. Remove sealing screws and connect the two differential pressure gauges to the gas valve as shown in Fig. 28 and remove the adjustment screw sealing cap.

2. Run the appliance for at least 10 minutes.

3. Note the gas valve signal pressure (differential pressure gauge 2) set the burner pressure (differential pressure gauge 1) to the corresponding value shown in Fig. 29 for the appropriate boiler. Screw the adjuster in to decrease pressure and out to increase pressure.

4. If a CO_2 analyser is available check that the flue gas CO_2 concentration is in line with the value given in the FIG.25.

   Note: If the gas valve signal is outside the specified range contact Potterton Myson Service Department.

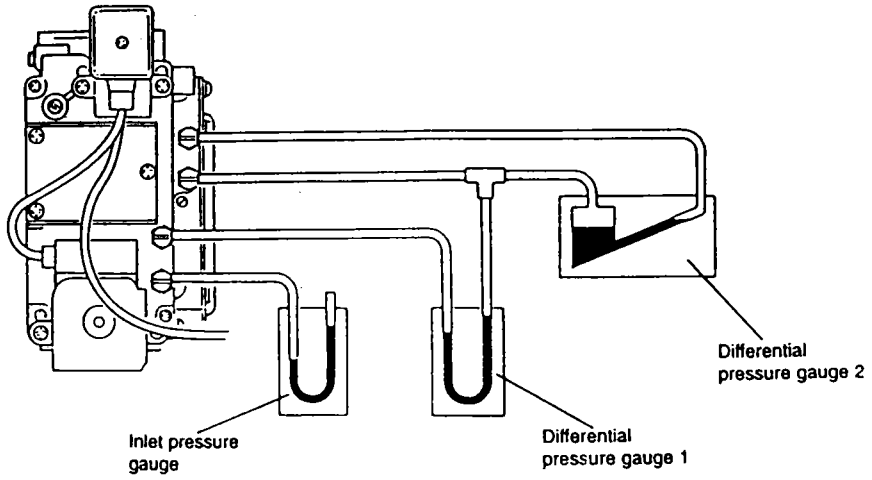

Fig.28

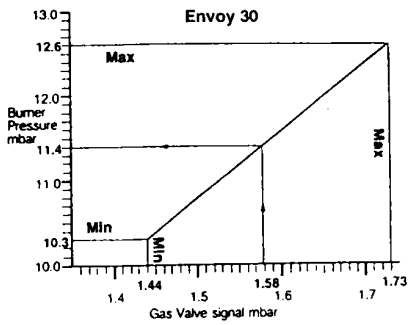

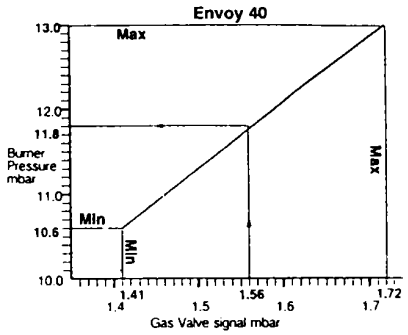

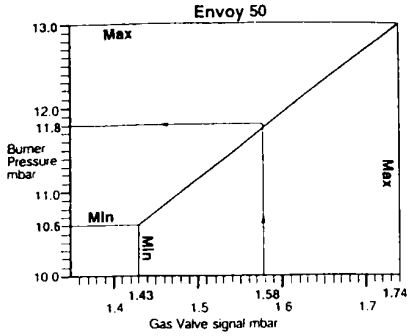

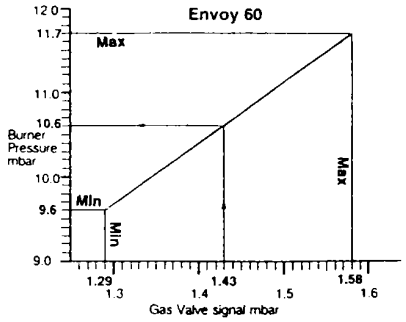

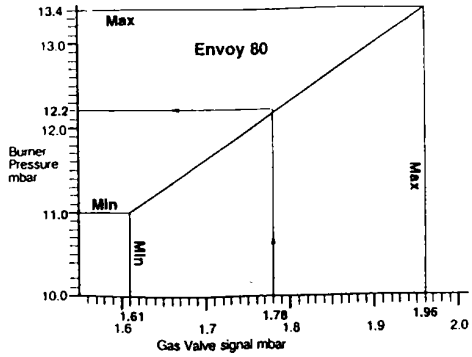

Boiler Model	CO_2
30	8.4% ± 0.3%
40	8.2% ± 0.3%
50	8.6% ± 0.3%
60	8.5% ± 0.3%
80	8.3% ± 0.3%

Fig.29

Back Page

spares & parts online IBASIS.CO.UK©