POTTERTON

Envoy
THE HEATSAVER

Installation & Service Instructions

POTTERTON ENVOY 30, 40, 50, 60, & 80 FAN POWERED BALANCED FLUE GAS FIRED CONDENSING BOILER

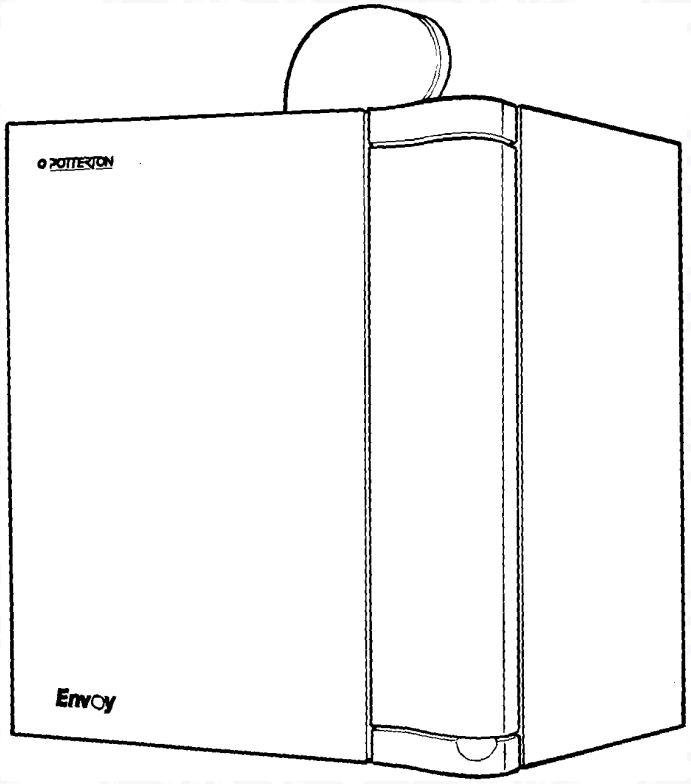

THE GAS SAFETY (INSTALLATION AND USE) REGULATIONS

"In your own interest, and that of safety, it is law that all gas appliances are installed by competent persons, in accordance with the above regulations. Failure to install appliances correctly could lead to prosecution."

The polythene bags used for packaging are a potential hazard to babies and young children and MUST BE DISPOSED OF IMMEDIATELY.

LEAVE THESE INSTRUCTIONS WITH THE USER FOR USE ON FUTURE CALLS

For Use With Natural Gas (G20) Only At 2Ombar For Use in GB & IE

CE

IMPORTANT
PLEASE READ THIS BOOK BEFORE INSTALLING OPERATING OR SERVICING THIS APPLIANCE

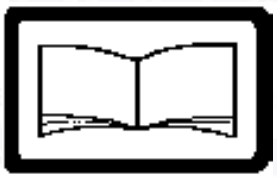

spares & parts online IBASIS.CO.UK

SECTION

1. Technical Data ..... Page 3
2. Installation Requirements 5
3. Installation 12
4. Commissioning 16
5. Servicing & Replacement of Parts 23
6. Fault Finding 27
7. Electrical Diagrams 28
8. Short Parts List 34

The Potterton ENVOY is a high efficiency lightweight, automatically controlled wall hung gas fired condensing boiler. The flue system is room sealed and fan powered. There are five models available with outputs of 8.8kW (30,000 Btu/hr), 11.7kW (40,000 Btu/hr), 14.6kW (50,000 Btu/hr), 17.6kW (60,000 Btu/hr) and 23.4kW (80,000 Btu/hr).

The boilers which are designed to provide domestic hot water and/or central heating must be used on INDIRECT FULLY PUMPED systems only, which may be sealed or open vented.

The boilers can be supplied with either of the following flue systems:-

One metre, 1.5 metre, 2 metre, 2.5 metre or 3 metre horizontal and one metre, 1.5 metre, 2 metre, 2.5 metre or 3 metre vertical.

ACCESSORIES

The following Potterton Myson controls are recommended for use with your boiler:-

Electronic Programmer EP2002, EP3002 or EP6002
Cylinder Thermostat PTT2 or PTT1 00
Room Thermostat PRT2 or PRT100
Frost Thermostat PRT100FR
Motorised Zone Valve M5V222 or M5V228
Motorised Diverter Valve M5V322
Thermostatic Radiator Valve

Data sheets describing these products are available on request.

OPTIONAL EXTRA

Terminal Wall Plate - where necessary can be fitted to the outside wall face to improve the appearance, after making good around the terminal. Part No. 236349. Terminal guard Part No. 236591.

Flat roof flashing kit for use with vertical flue.
Part No. 430080.
Pitched roof flashing kit for use with vertical flue.
Part No. 430081.

TECHNICAL DATA – Page 3

Boiler Output		30	40	50	60	80
Heat Input	kW Btu/hr	10.1 34,500	13.43 45,800	16.87 57,600	20.2 68900	26.86 91,600
NONE CONDENSING Heat Output	kW Btu/hr	8.79 30,000	11.72 40,000	14.65 50,000	17.58 60,000	23.45 80,000
CONDENSING Heat Output	kW Btu/hr	9.7 33,100	12.8 43,700	16.1 55,000	19.0 64,800	25.0 85,400
Gas Rate	M3/h ft3/hr	0.96 34.0	1.28 45.2	1.6 56.7	1.92 68.0	2.56 90.4
Burner Pressure	mb in/wg	11.4 4.6	11.8 4.7	11.8 4.7	10.6 4.24	12.2 4.9
Injector Size mm		2.5	2.9	3.2	3.7	4.2

Classification	1₂H. C1. C3. 1P20
Burner	Furigas Pre-mix
Igniter	Norton 401S Hot Surface
Flame Detector	Morgan Matroc
Gas Control Valve	SIT Nova Mix 1-8 Air Gas Ratio
Electrical Supply	230V - 50Hz
Fuse Rating - External	3A
Packed Weight	37.0 Kg
Water Capacity	2.4 Litres
Gas Supply Connections	1/2” BSP Female Gas Cock
Flow Connections	22mm Compression
Return Connections	22mm Compression
Condense Discharge Connection	21.5mm (3/4”) Plastic Compression
Maximum Flow Temperature	82 Degree Centigrade
Maximum Static Head	30.5M (100 Ft) Measured from the top of the casing
Minimum Static Head	150mm (6”) Measured from the top of the casing
Flue Size	100mm Concentric

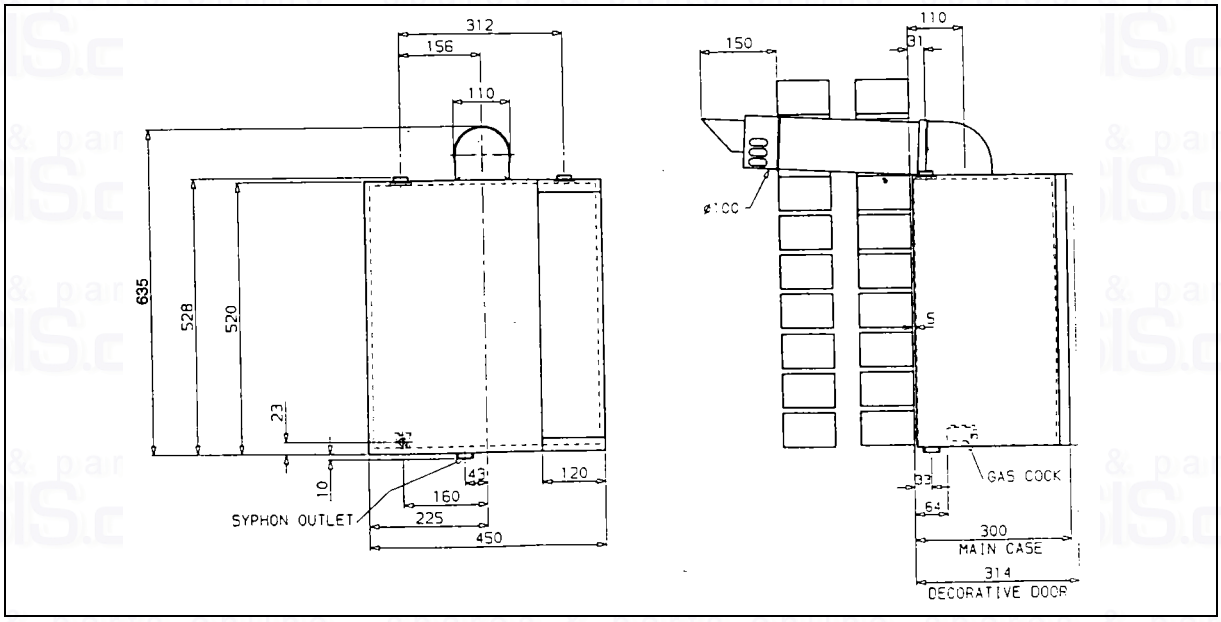

FIG.1 BOILER DIMENSIONS

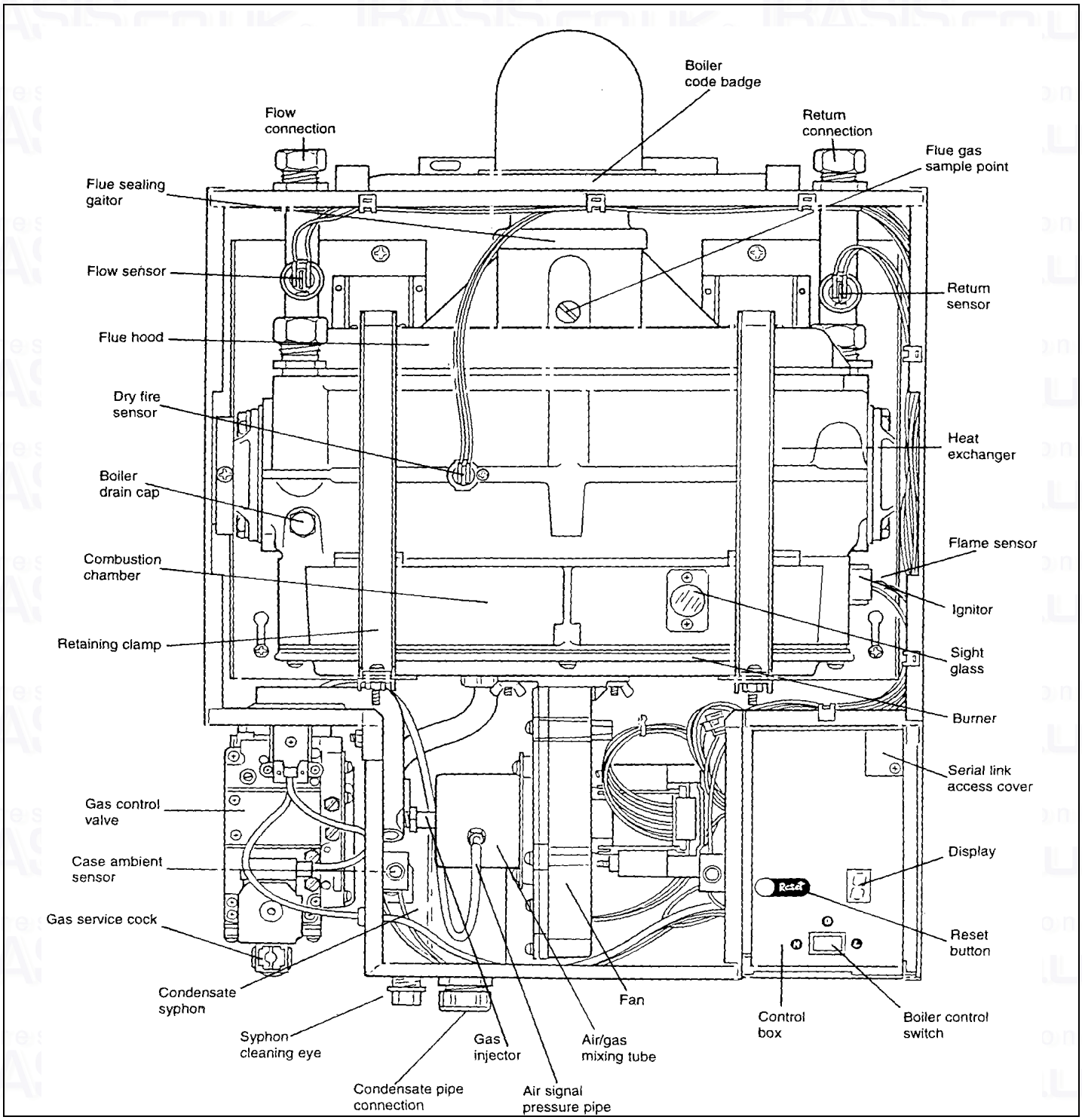

FIG.2 GENERAL ARRANGEMENT

INSTALLATION REQUIREMENTS – Page 5

GENERAL INFORMATION

Both the user and the manufacturer rely heavily on the installer, whose job it is to install the boiler and connect it to a correctly designed heating system. Acquaint yourself with the British Standards concerning installation requirements. If you need advice on any points, Potterton Service Operations will be pleased to help (see back page).

CODES OF PRACTICE

I.E.E. Regulations
Model Water Bye Laws
Building Regulations/Building Standards for Scotland.
Health and Safety Document No.635. (The Electricity at Work Regulations 1989).

BS.6891	Installation of low pressure pipes.
BS.6798	Installation of gas boilers of rated input not exceeding 60kW.
BS.5449	Forced circulation hot water CH systems. Including smallbore and microbore domestic central heating systems.
BS.5546	Installation of gas hot water supplies for domestic purposes.
BS.5440:1	Flues (for gas appliances of rated input not exceeding 60kW).
BS.5440:2	Air supply (for gas appliances of rated input not exceeding 60kw).
BG.DM2	Guide for gas installation in timber framed buildings.

Note: Samples of Envoy boiler have been examined by the Netherlands Notified Body, Gastec and the range is certified to comply with the essential requirements of the GAD and is permitted to carry the CE Mark.

It is important that no external control devices e.g. flue dampers, economisers etc, be directly connected to this appliance unless covered by these Installation and Service instructions or otherwise recommended by Potterton in writing. If in doubt please enquire.

Any direct connection of a control device not recommended by Potterton could invalidate the certificate and the normal appliance warranty and could also infringe the Gas Safety Regulations.

Manufacturers instructions must not be taken in any way as over-riding statutory obligations.

ELECTRICITY SUPPLY

A 230 volts - 50Hz, single phase electricity supply fused to 3 amperes, must be provided in accordance with the latest edition of the IEE Wiring Regulations and any other local regulations that apply. The current rating of the wiring to the boiler must exceed 3 amperes and have a cross sectional area of at least 0.75mm^2 in accordance with BS.6500, Table 16.

The supply to the boiler and its associated equipment should be controlled by an exclusive 3A fused double pole switch (having at least 3mm contact separation in both poles) so that complete isolation from the supply can be achieved to enable servicing work to be carried out in safety.

GAS SUPPLY

A gas supply pressure of 20 mbar is required at the inlet to the appliance. Performance data is based on use of reference gas G20.

CONDENSATE DRAIN

The condensate outlet on the boiler is designed to accept 21.5mm *(314* in) plastic overflow pipe, which if possible should discharge into the household drainage system and have an internal termination. If this is not practical, discharge into an outside gully or soak away is acceptable. To avoid blockage of this pipe due to freezing it should be routed internally where possible and have sufficient fall over its entire length to dispose of condensate quickly. See British Gas Guidance Notes for the Installation of Domestic Gas Condensing Boilers'.

LOCATION OF BOILER

These boilers are not suitable for external installation and should not be fitted directly above a cooking appliance. The boiler may be installed in any room, although particular attention is drawn to the requirements of the current IEE Wiring Regulations and in Scotland, the electrical provisions of the Building Standards applicable in Scotland with respect to the installation of the appliance in a room containing a bath or shower.

INSTALLATION REQUIREMENTS – Page 6

Where a room-sealed appliance is installed in a room containing a bath or shower, any electrical switch or appliance control, utilising mains electricity should be so situated that it cannot be touched by a person using the bath or shower.

Where the installation of the boiler will be in an unusual location, special procedures may be necessary and BS.6798 gives detailed guidance on this aspect.

It should be noted that due to the high efficiency of this boiler a white plume of condensate will be emitted from the flue terminal therefore care should be taken when selecting the terminal position.

Ensure that the gas supply pipe and meter are large enough for the appliance and any others that may be run off the same meter. Reference should be made to BS.6891.

BOILER MOUNTING SURFACE

The boiler must be mounted on a flat wall, which may be of combustible material and must be sufficiently robust to take the weight of the boiler. The requirements of the local authorities and the Building Regulations must be adhered to.

IMPORTANT NOTICE:–TIMBER FRAMED HOUSES

If the appliance is to be fitted in a timber framed building, it should be fitted in accordance with British Gas Publication 'Operational Procedures for Customer Service' Part 19. If in any doubt, advice should be sought from the local region of British Gas.

CLEARANCES AROUND THE BOILER

The following minimum clearances must be maintained after installation, for correct operation and servicing of the boiler:

610mm (2ft)	at the front of the boiler
5mm (0.2 in)	each side of the boiler
140mm (5.5 in)	at the top (measured from the top of the boiler case)
100mm (4 in)	at the bottom of the boiler

VENTILATION

If the boiler is to be installed in a confined space such as a cupboard, the space will need ventilating. Openings must be provided at the top and bottom of the cupboard each of which should have a free area as shown in TABLE 1. Further details for installation of a boiler within a compartment are given in BS.6798.

TABLE 1

AIR VENT AREAS

	in^2	cm^2
30	16	103
40	21	135
50	26	170
60	32	206
80	43	277

If the openings draw air from outside the building the free areas may be halved. Refer to BS.5440 Part 2 for further guidance.

FLUE TERMINAL AND DUCTING (Fig. 3a, b & c)

The standard **horizontal** flue system (Potterton Part No. 236346) is suitable for installations up to 1030mm, measured from the centre line of the boiler outlet to the outside face of the wall.

One metre flue extension kits (Part No. 430085) are available to extend horizontal flues to a maximum length of 2920mm. The siting positions for horizontal flue terminals are shown in Figs. 3a, b & c.

A concentric vertical flue system is available (Part No. 236348) which when used in conjunction with **one metre flue extension kits (Part No.** 430085) is suitable for flue heights up to 3 metres to terminate through a roof.

The siting of the flue terminal through a roof is shown in Fig. 3c.
Only the above flue systems should be used with Envoy boilers.

As with all condensing boilers, the flue will produce a plume of visible condensation for much of the time that the boiler is running.

Care must therefore be taken in the siting of the terminal so as not to be a nuisance to adjacent property.

In particular, prolonged wetting of a facing wall should be avoided, if necessary by use of an appropriate deflector.

If a horizontal flue is sited less than 2m above a balcony, above ground, or above a flat roof to which people have access, a suitable terminal guard must be fitted. This serves two purposes, to protect the terminal against damage or interference and to protect passers-by. A terminal guard is available (Part No. 236591).

INSTALLATION REQUIREMENTS – Page 7

Note: Where a flue terminal is installed less than one metre from a plastic, or painted gutter, or 500mm from painted eaves, an aluminium shield one metre long, should be fitted to the underside of the gutter or painted surface. A suitable wall plate should be fitted to the painted wall surface of a mobile home.

IMPORTANT: It is absolutely ESSENTIAL to ensure that products of combustion discharging from the terminal cannot re-enter the building, or any other adjacent building, through ventilators, windows, doors, natural air infiltration, or forced ventilation/air conditioning. If products of combustion are found to be re-entering any building, the appliance MUST be turned OFF IMMEDIATELY.

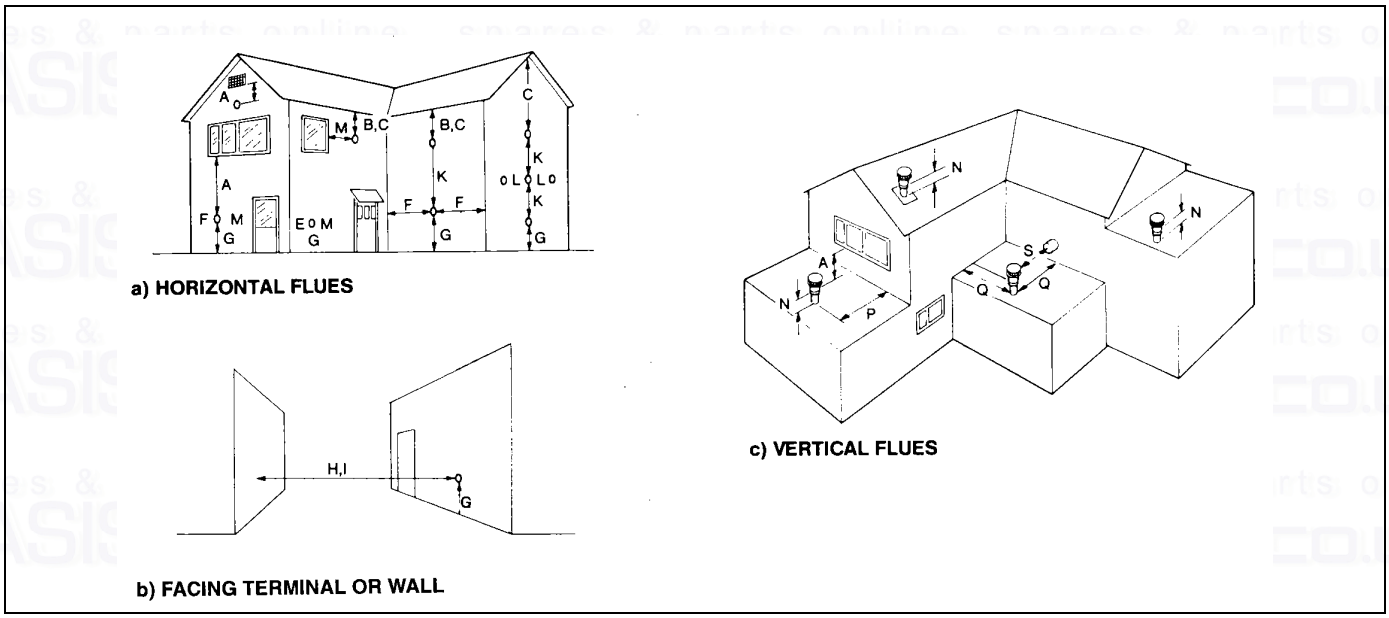

FIG. 3 FLUE TERMINAL POSITIONS

		Mm. Distance mm
A	DIRECTLY BELOW AN OPENABLE WINDOW, AIR VENT, OR ANY OTHER VENTILATION OPENING	300
B	BELOW GUTTER, DRAIN/SOIL PIPE	75
C	BELOW EAVES (HORIZONTAL FLUE ONLY)	200
*	BELOW A BALCONY/CARPORT ROOF	NOT RECOMMENDED
E	FROM VERTICAL DRAIN PIPES AND SOIL PIPES	75
F	FROM INTERNAL OR EXTERNAL CORNERS	300
G	ABOVE ADJACENT GROUND OR BALCONY LEVEL	300
H	FROM A SURFACE FACING THE TERMINAL	600
I	FACING TERMINALS	1200
*	FROM OPENING (DOOR/WINDOW) IN CARPORT INTO DWELLING	NOT RECOMMENDED
K	VERTICALLY FROM A TERMINAL ON THE SAME WALL	1,500
L	HORIZONALLY FROM A TERMINAL ON THE SAME WALL	300
M	ADJACENT TO OPENING	300
N	ABOVE ROOF LEVEL (TO BASE OF TERMINAL)	300
P	FROM ADJACENT WALL TO FLUE	300
Q	FROM INTERNAL CORNER TO FLUE	400
*	BELOW EAVES OR BALCONY (VERTICAL FLUE)	NOT RECOMMENDED
S	FROM FACING TERMINAL	2000

THE SYSTEM – Page 8

The Envoy boiler has an aluminium alloy heat exchanger therefore all systems need to be thoroughly cleansed and the correct treatment added to the system water.

The only system additives recommended by Potterton are FERNOX-COPAL or GRACE DEARBORN-SENTINEL X 100 and should be used in accordance with the manufacturers instructions. This will include use of the appropriate system cleanser.

The boiler must be used on INDIRECT FULLY PUMPED systems only, which may be sealed or open vented.

The system should be designed so that the maximum static head does not exceed 30.5m (100ft) and a minimum of 150mm (6in). See FIG. 4.

On all systems the pump live should be wired to the boiler terminal block, it will then be controlled by the pump over-run timer. This will ensure that the pump will continue to run after boiler shut down if the water temperature is high, thus preventing nuisance operation of the overheat control.

It is important that where electrically operated zone valves are used the boiler is wired so it does not cycle when the zone valves are closed. Also, systems fitted with controls that close both hot water and central heating circuits while the boiler is still hot, must be fitted with a by-pass circuit to dissipate residual heat from within the boiler.

If a three port diverter valve is used as shown in FIGS. 4 & 5 a by-pass is not necessary since one circuit is always open.

Where a pair of two port valves are used, a by-pass is necessary. The total length of the by-pass circuit taken from the boiler connections should be greater than 4 metres of 22mm pipe. It should be fitted with a lockshield valve and be adjusted to maintain a minimum flow through the boiler of 4.5 litres/mm (1 gal/mm) see FIGS. 4 & 5.

Systems fitted with controls which allow the boiler to operate when both the hot water and central heating circuits are closed i.e. mechanically operated thermostatic control valves, must be fitted with a by-pass circuit capable of:-

1. Dissipating a minimum of 1kW (3400 Btu/h).

2. Maintaining a minimum water flow through the boiler of 9 litres/mm (2 gal/mm).

A suggested method of meeting these requirements by using a bathroom radiator fitted with two lockshield valves is shown in FIGS. 4 & 5.

Drain off taps should be fitted in the pipework close to the boiler and in the low points of the system.

NOTE

Although the system can be emptied using the drain off taps installed in the pipework around the system, to empty the boiler it is necessary to remove the drain off cap positioned within the boiler case. See FIG. 2.

SEALED SYSTEMS

Installation

The installation must comply with the requirements of BS.6798 1987 and BS.5449 Part 1. The B.G. publication “British Gas Specification for Domestic Wet Central Heating Systems” should also be consulted.

SAFETY VALVE

A non-adjustable spring-loaded safety valve, preset to operate at 3 bar (451bf/in2) shall be used. It must comply with BS.6759 Part 1 and include a manual testing device. It shall be positioned in the flow pipe either horizontally or vertically upwards and close to the boiler. No shut-off valves are to be placed between the boiler and the safety valve. The valve should be installed into a discharge pipe which permits the safety discharge of steam and hot water such that no hazard to persons or damage to electrical components is caused.

PRESSURE GAUGE

A pressure gauge incorporating a fill pressure indicator, covering the range 0-4 bar (60lbf/in^2) shall be fitted to the system. It should be connected to the system, preferably at the same point as the expansion vessel. Its location should be visible from the filling point.

EXPANSION VESSEL

A diaphragm type expansion vessel to BS.4814 Part 1 shall be fitted close to the inlet side of the pump. The connecting pipework should not be less than 15mm (1/2in nominal). Pipework connecting the expansion vessel should not incorporate valves of any sort. Methods of supporting the vessel are supplied by the manufacturer. The nitrogen or air charge pressure of the expansion vessel shall not be less than the hydrostatic head (height of the top point of the system above the expansion vessel). To size the expansion vessel it is first necessary to calculate the volume of water in the system in litres. The following volumes may be used as a conservative guide to calculating the system volume.

Boiler Heat Exchanger	2.4 litres
Small Bore Pipework	1 litre per kW of system output
Micro Bore Pipework	7 litres
Steel Panel Radiators	8 litres per kW of system - output
Low Water Capacity - Radiators	2 litres per kW of system - output
Hot Water Cylinder	2 litres

If the system is extended, the expansion vessel volume may have to be increased unless previous provision has been made for the extension. Where a vessel of the calculated size is not available, the next available larger size should be used.

The boiler flow temperature is controlled at approximately 82^{0}C MAX.

The vessel size can now be determined from the following table where V=System volume in litres.

Vessel Charge Pressure (Bar)	0.5	1.0
Initial System Pressure (Bar)	1.0	1.0
Expansion Vessel Volume Litres	V x 0.11	V x 0.087

CYLINDER

The hot water cylinder must be an indirect coil type or a direct cylinder fitted with an emersion calorifier suitable for operating at a gauge pressure of 0.3 bar (Slbf/in^2) in excess of safety valve setting. Single feed indirect cylinders are not suitable for sealed systems.

METHOD OF MAKE-UP

Provision shall be made for replacing water loss from the system either:-

i) from a make-up vessel or tank mounted in a position higher than the top point of the system, and connected through a non-return valve to the system on the return side of hot water cylinder or the return side of all heat emitters.
or

ii) where access to make-up vessel would be difficult by using the mains top up method or a remote automatic pressurisation and make-up unit as illustrated in FIG. 5, Methods 1 and 2.

MAINS CONNECTION

There shall be no connection to the mains water supply or to the water storage tank which supplies domestic water even through a non-return valve, without the approval of the local Water Authority.

FILLING POINT

The system shall be fitted with a low filling point at low level which incorporates a stop valve to BS.1010 and a double check valve (approved by the National Water Council) to be fitted in this order from the system mains, refer to FIG. 5, Method 1.

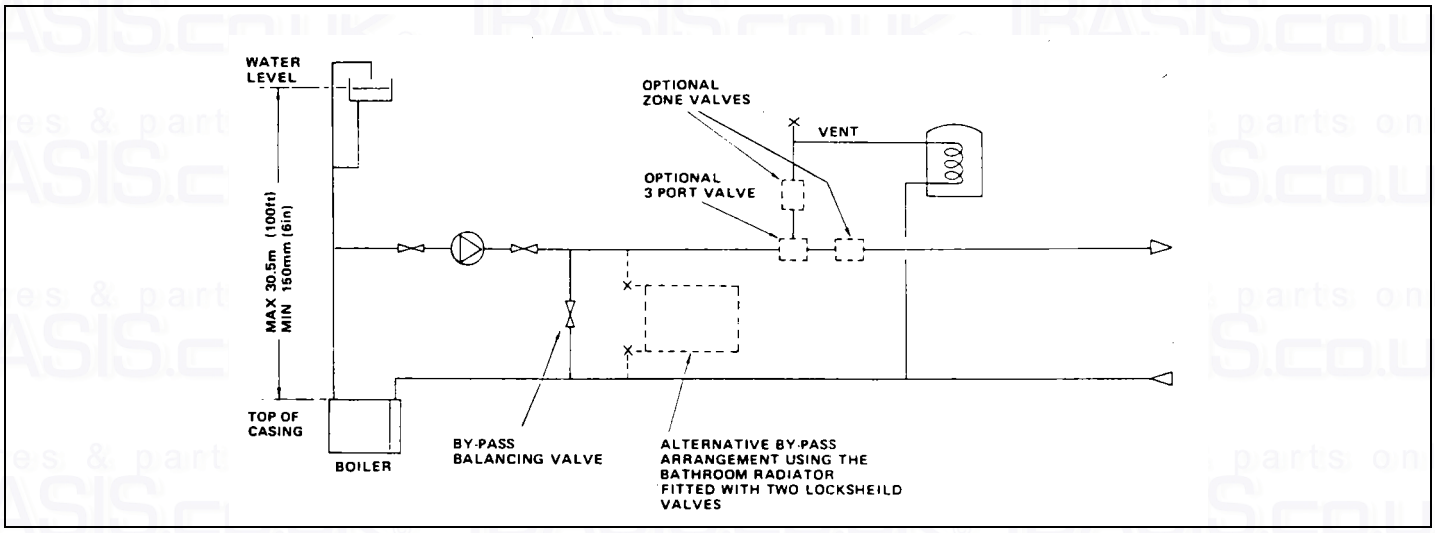

FIG. 4: OPEN VENTED FULLY PUMPED SYSTEM FITTED WITH A COMBINED FEED AND VENT

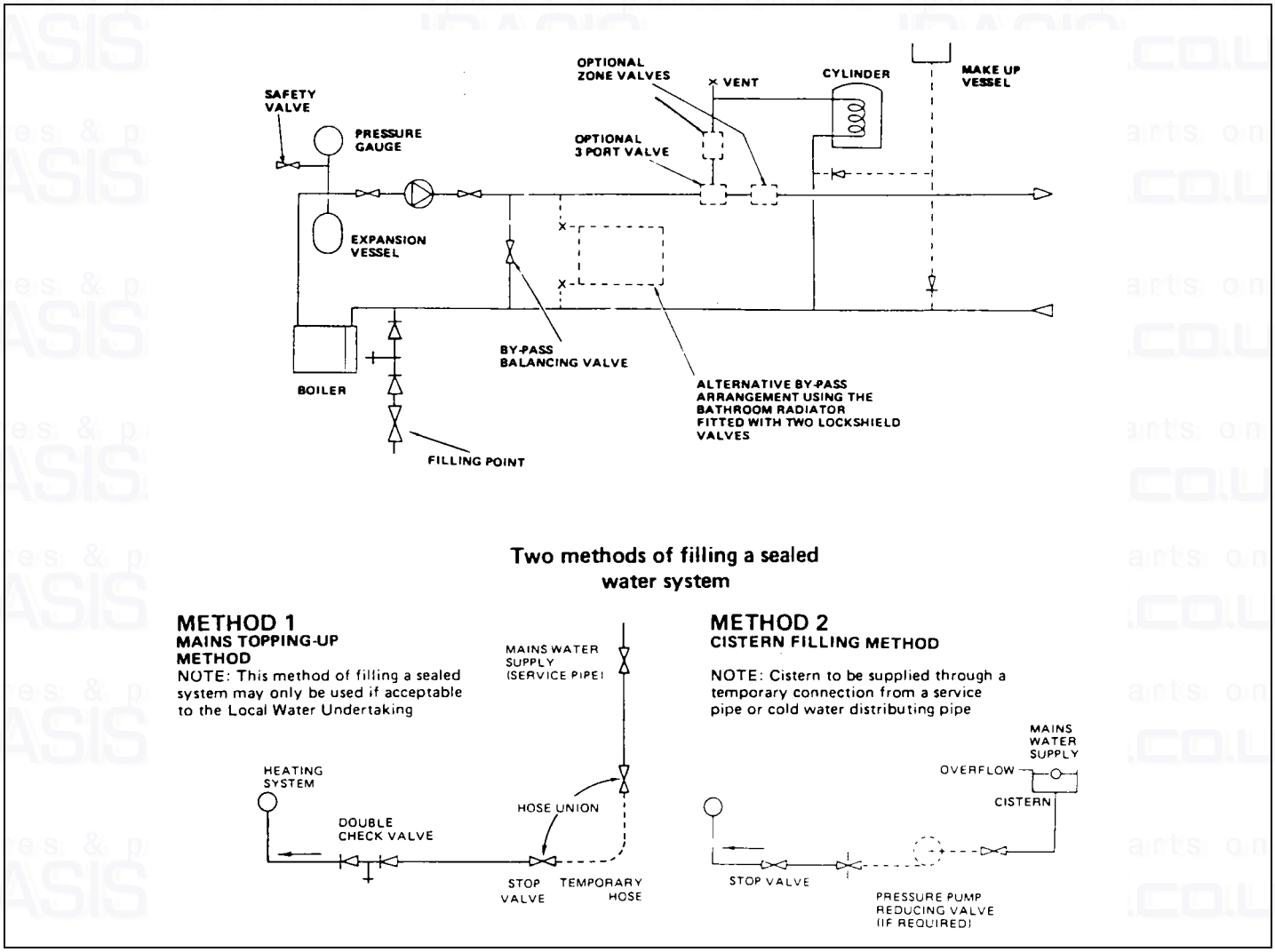

FIG. 5: FULLY PUMPED SEALED SYSTEM.

CIRCULATION PUMP SELECTION – Page 11

The resistance through the heat exchanger when operating with a water flow rate producing an 11^{0}C temperature rise at maximum boiler output are shown in TABLE 2. If other controls, such as three-position valves are used in the system, the resistance through them, quoted in their manufacturer's literature must be taken into account. The pump may be fitted on either the flow or return and MUST be wired directly to the boiler terminal block. It must be fitted with two isolating valves which are positioned as close to the pump as possible. Closing of any valve must always leave the open vent unobstructed.

TABLE 2

Boiler Size	Water Flow Rate		Boiler Resistance	
	Litres/sec	gal.min	mb	in wg
30	0.19	2.5	17.5	7.0
40	0.25	3.34	30.0	12.0
50	0.32	4.17	44.0	17.5
60	0.38	5.0	60.0	24.0
80	0.51	6.67	105	42.0

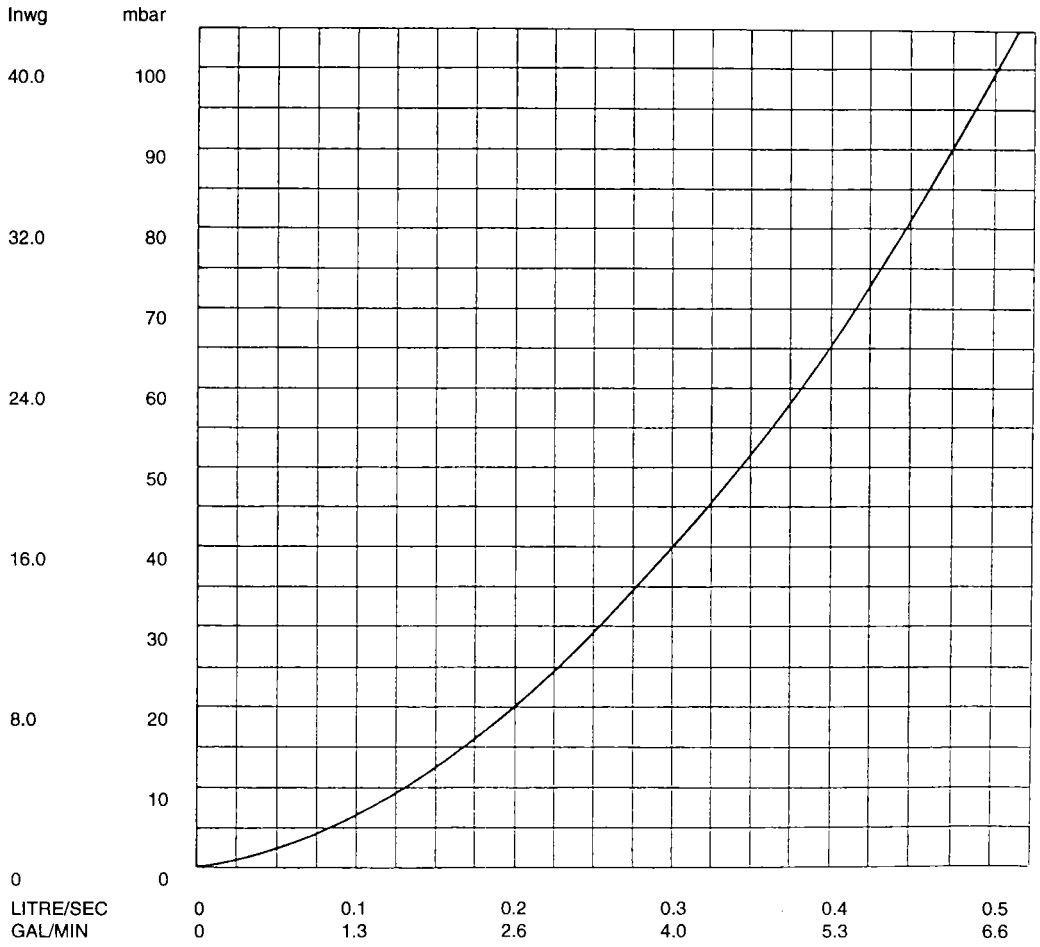

FIG. 6 PRESSURE LOSS ACROSS BOILER

INSTALLATION – Page 12

It is the law that all gas appliances are installed and serviced by a competent person as stated in Gas Safety (Installation and Use) Regulations 1994.

For Health and Safety Information Page 35.

Electrical test work should be carried out by a competent person in accordance with IEE Wiring Regulations.

The boiler and its associated equipment will arrive on site in 2 cartons. The contents of each carton is as follows:-

CARTON 1:- Boiler Pack
Boiler
Outer casing assembly
Template
Boiler mounting plate
Accessory pack
Literature pack containing:
Installation and Service instructions, Users instructions
Warranty Envelope
CARTON 2:- Flue Pack
Flue system as ordered
Flue fitting instructions

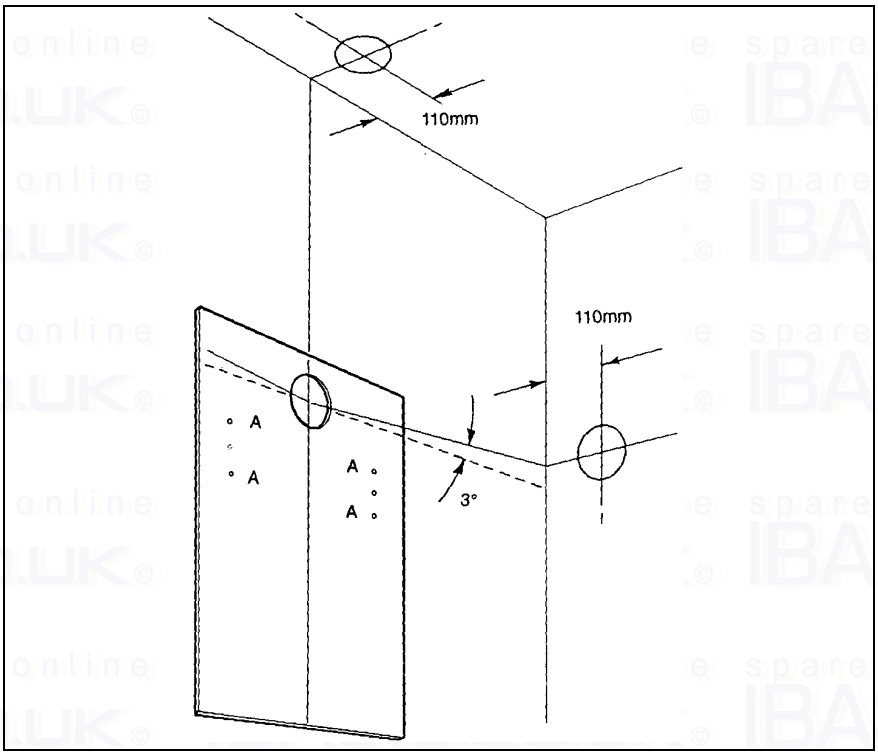

FIG. 7 TEMPLATE

Taking due account of the terminal position and making allowance for all horizontal flues to rise at an angle of 3^0 (52mm per metre) from the boiler, place template in proposed boiler position. Ensure the template is level and mark hole positions 'A'. If rear fluing mark flue outlet hole through template.

When side or vertically fluing extend flue outlet centre line on the template horizontally or vertically as appropriate and mark flue outlet hole on adjacent surface as illustrated. Vertical flues require a 105mm diameter hole unless extension kits are used when the hole size will need to be increased to 125mm to allow joining clamps to pass through.

Horizontal flues require a hole diameter of 125mm for all wall thicknesses providing the hole rises through the wall at an angle of 3^0.
Where a horizontal hole is produced using a core drill the hole diameter will need to be increased for thicker walls as shown in the following table.

Hole Diameter	Maximum wall thickness
125mm	230mm
150mm	720mm
175mm	1000mm

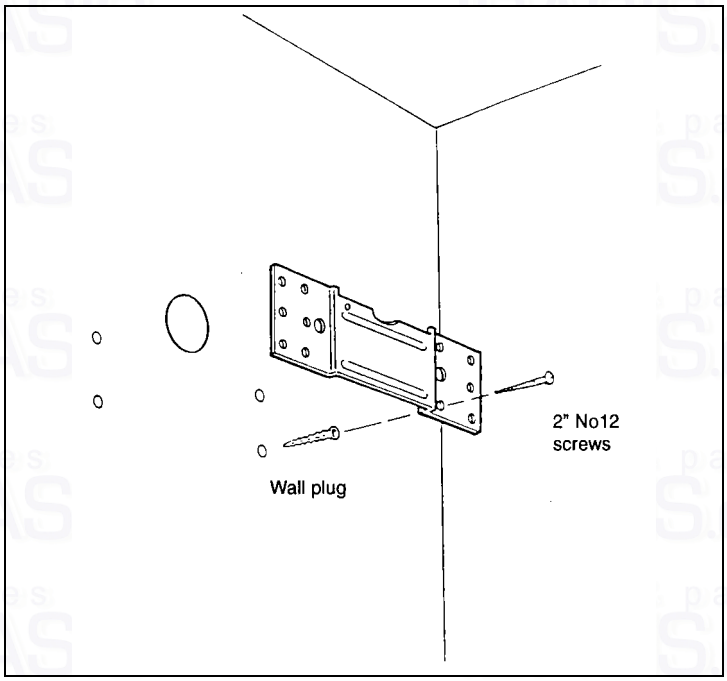

Remove template and drill holes 'A' using a 7mm drill. Carefully cut flue outlet hole through wall or ceiling allowing for any horizontal flue to rise at an angle of 3^0 throughout its length.

Using wall plugs and screws from accessory pack 'A' attach boiler mounting plate to wall ensuring that it is level.

FIG. 8 BOILER MOUNTING PLATE

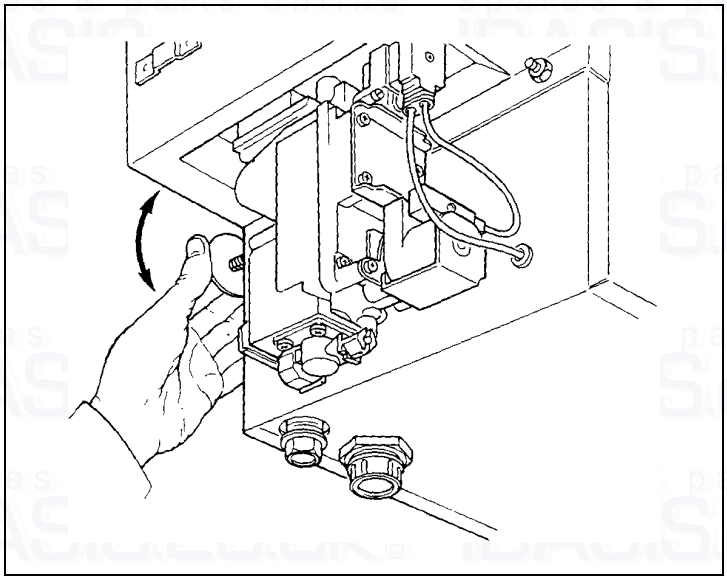

Lift the boiler onto the mounting plate and adjust vertical alignment using the adjustment screws at the rear of the boiler. Refer to FIG. 11 and secure the boiler to the mounting plate using the MS screw from accessory pack 'A'.

FIG. 9 LIFTING, ADJUSTING AND SECURING THE BOILER

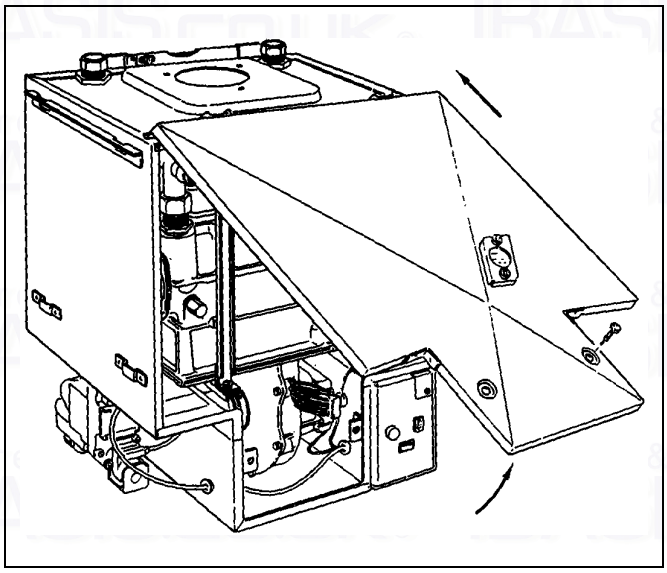

FIG. 10 REMOVING FUNCTIONAL CASE DOOR

Remove functional case door by undoing the two lower securing screws and lift door off the two upper hinge brackets.

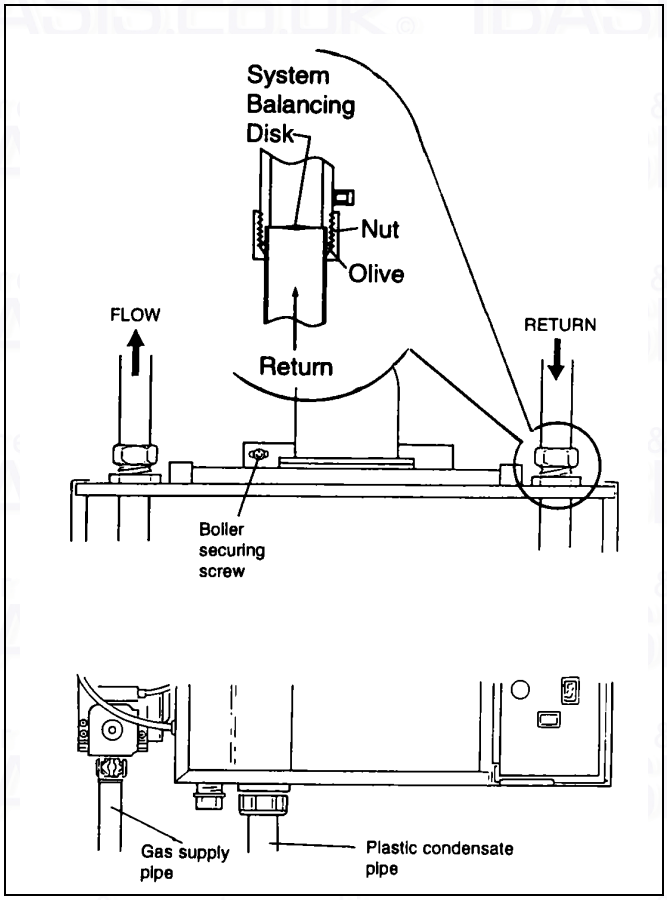

FIG. 11 PIPE CONNECTIONS

Envoy 30 & 40 Only: These boilers are supplied with a balancing disc in the separate fittings pack. The disc should be fitted in the boiler return pipe before the system pipework is connected to the boiler.

Envoy 30 disc - 7 mm diameter orifice
Envoy 40 disc - 9 mm diameter orifice

Connect system pipework to the boiler. A drain off tap should be installed close to the boiler. Compression nuts and olives are provided in Accessory pack ‘C’.

Connect plastic condensate drain pipe to the outlet connection at the base of the boiler.

Connect the gas supply pipe to the inlet connection of the gas cock. The gas cock should be temporarily disconnected from the gas control valve if a solder connection is being made. Ensure that the ‘O’ ring seal is correctly located between gas cock and gas control valve on reassembly.

FLUE SYSTEM

Assemble and attach the flue system to the boiler by following the instructions supplied with the flue kit.

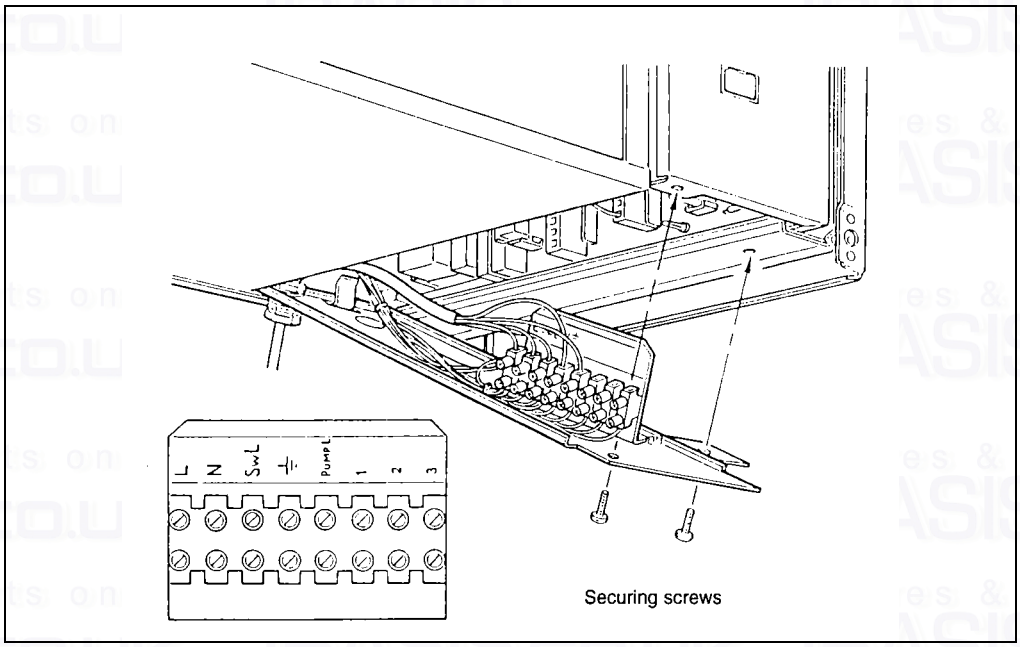

FIG. 12 ACCESSING TO THE BOILER ELECTRICAL TERMINAL BLOCK & ROUTING OF ELECTRICAL WIRING

ELECTRICAL CONNECTIONS

The boiler and all external control circuit wiring must be supplied from the same isolating switch or plug and socket.

The boiler terminal block which is situated in the control box is not designed to accept wiring from all the on-site controls therefore the installer will need to incorporate an external junction box.

Open the control box by removing the two M4 securing screws and lowering the access door as illustrated.

ELECTRICAL WIRING

Route a five core cable from the external junction box through the cable clamp in the underside rear of the control box and connect to boiler terminal box as follows.

Permanent live to terminal marked L
Neutral to terminal marked N
Earth to terminal marked ⏚
Switched live from external controls to terminal marked SwL

Following the pump manufacturers instructions connect the pump live to terminal marked PUMP L.

The neutral and earth wires for the pump should be routed and connected to the appropriate connections within the external junction box.

If there are no external controls fitted connect SwL terminal to permanent live in the junction box.

Note: The electrical mains supply must be fused at 3A and the connection must be made to the boiler terminals in such a way that should the lead disengage from the cable clamp, the current carrying conductors become taut before the earth conductor.

Close the control box and replace the two M4 securing screws.

COMMISSIONING – Page 16

OPEN VENTED SYSTEMS

Remove the pump and flush out the system thoroughly with cold water. Refit the pump. Fill and vent the system. Examine for leaks.

SEALED SYSTEMS

NOTE:

The system can be filled using a sealed system filler pump with a break tank or by any other method approved by the Local Water Authority. Refer to 'THE SYSTEM' section Page 9 in these instructions, also BS.6798 1987.

Remove pump and flush out the system thoroughly with cold water. Refit the pump. Fill and vent the system until the pressure gauge registers 1.5 bar (21.5 lbf/in^2). Examine for leaks. Raise the pressure until the safety valve lifts. This should occur within ±0.3 bar of the preset lift pressure of 3 bar. Release water to attain the correct cold fill pressure, and set the indicator on the water gauge to this value.

ALL SYSTEMS

The whole of the gas installation including the meter should be inspected and tested for soundness and purged in accordance with the recommendations of BS.6891.

Electrical testwork should be carried out by a competent person in accordance with the lEE Wiring Regulations.

Conduct a preliminary electrical test by checking: for short circuits, fuse failure, incorrect polarity, earth continuity and resistance to earth. If a fault has occurred on the appliance, the fault finding procedure should be followed. See page 27

Fit the functional case door into position by lifting it onto the top hinge brackets and secure it with the lower two fixing screws.

FIRST LIGHTING

WARNING: Before lighting the boiler ensure that the functional case door HAS BEEN CORRECTLY FITTED and that the sealing strip fitted to the door is forming a tight seal with the main boiler casing. Before proceeding to light the boiler, check that the external electricity supply to the boiler is switched off and that the boiler control switch is in the mid i.e. 0 position.

Turn on the gas service cock.

Ensure that the pump and radiator isolating valves are open.

Ensure that the time control, if fitted is in an on condition, and that the room and/or cylinder thermostats, where fitted are set to high temperatures.

Switch on the external electricity supply to the boiler.

The display on the front of the control panel will show the character "0".

Note: The boiler is protected by an automatic frost protection device, therefore if the water temperature within the boiler is below 5^{0}C the character "H" will be displayed and the boiler will fire until a return temperature of 10^{0}C is reached. The boiler will then shut down and the character "0" will be displayed.

Switch the boiler control switch to the "H" position and the character "H" will be displayed. After approximately 10 seconds the boiler should light. Due to the presence of air in the gas supply it is possible that the boiler will not light at the first attempt but will automatically cycle and make two further attempts. If the boiler still fails to light it will go to lockout indicated by the character "F" shown flashing on the display. If this should occur wait 10 seconds then press the lockout reset button and the boiler will go through another start sequence.

It should be noted that the boiler control continuously monitors the temperature rise across the heat exchanger. Therefore, if the system is not correctly vented, air passing through the pump may lead to boiler shut down with the character **"2"** being displayed. If this occurs thoroughly vent the system and press the reset button.

If the boiler fails to start after 1 or 2 attempts refer to fault finding section on Page 27

BURNER PRESSURE

This appliance is fitted with a Gas/Air ratio control mixing valve. This gas valve ensures that the correct amount of gas is delivered to the burner to match the available air supply under all operating conditions.
THE BURNER PRESSURE AND GAS RATE HAVE BEEN PRECISELY SET AND CHECKED DURING MANUFACTURE AND NO ATTEMPT SHOULD BE MADE TO ADJUST IT.

To check the correct operation of the gas valve follow the instructions below carefully.

a. A good indication of correct operation of the boiler will be obtained by measuring the gas rate at the gas meter.

1. Run the appliance for at least 10 minutes.
2. With all other gas appliances turned off measure the gas rate at the meter for a period of at least 5 minutes. Check that the measured rate is within ± 5% of the rate stated on the data plate.

b. To measure the burner pressure.

1. Turn off the gas service cock. Fit a pressure gauge to the gas inlet pressure tapping on the gas control valve. Connect a differential pressure gauge or 'U' tube manometer between the burner pressure gauge tapping (high pressure side) and the reference pressure tapping (low pressure side) on the gas valve (see Fig. 13).
2. Turn on the gas service cock and run the appliance for at least 10 minutes. Check that the gas inlet pressure is between 19-20 mbar.
3. Check that the differential burner pressure is within ± 1.0 mbar of that stated on the data plate.
4. Turn off the gas service cock and remove the pressure gauge and replace the pressure tapping sealing screws on the gas valve.

Should the gas rate or differential burner pressure fall outside the specified range run the boiler for a further 10 mins and carry out a recheck, if after rechecking either the gas rate or the burner pressure falls outside the tolerance specified, Potterton Myson Service Department should be called as specialist equipment is required to enable adjustment to be made.

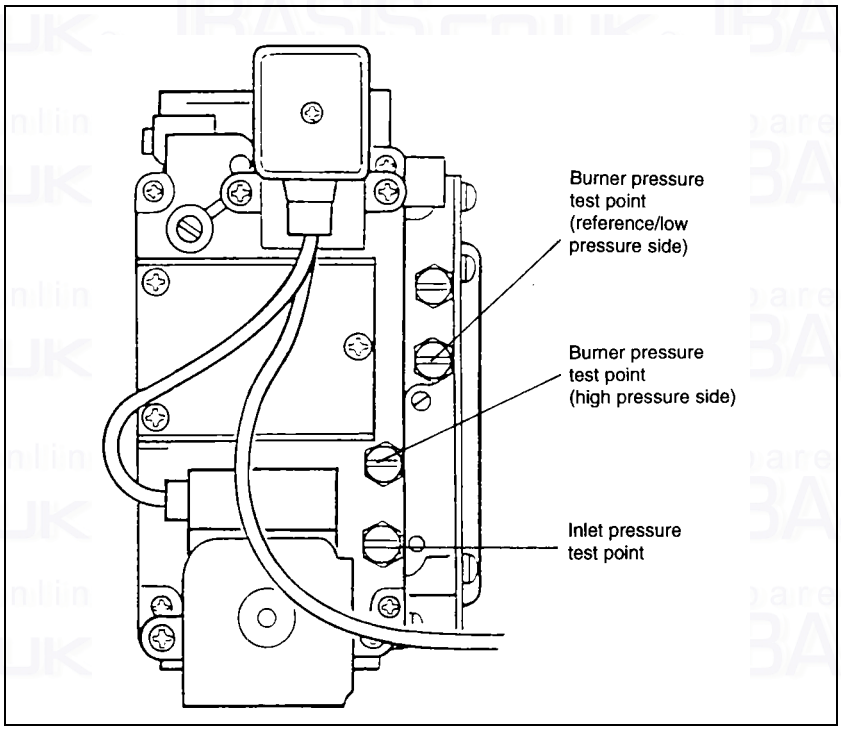

FIG. 13 GAS CONTROL VALVE

Relight the boiler and reheat the system to maximum. Check for water leaks, turn the boiler off, drain the system whilst hot.

Remove functional case door and ensure there are no condensate leaks from around the boiler or the condensate drainage system.

Refit functional case door ensuring a good seal.

Refill the system and add the correct concentration of FERNOX COPAL or GRACE DEARBORN SENTINEL XI 00 water treatment. On sealed systems adjust to the correct cold fill pressure.

If a by-pass circuit is fitted the by-pass valve should be adjusted with the boiler operating under minimum load conditions to maintain sufficient water flow through the boiler to ensure that the overheat device does not operate under normal operating conditions.

BOILER CONTROL SWITCH

In the mid i.e. "O" position holds the boiler in a STANDBY condition. In the "L" position allows the boiler to operate automatically but controlled at a maximum flow temperature of 60^{0}C. In the "H" position the boiler will operate automatically at a maximum flow temperature of 82^{0}C.

PUMP OVER RUN TIMER

Will keep the pump running for approximately 3 minutes after burner shutdown to dissipate heat left within the boiler. The times are pre-set and no adjustment is possible.

OVERHEAT PROTECTION DEVICE

The overheat protection device is pre-set and no adjustment is possible. Manual resetting is required if an overheat condition occurs. The reset button is situated in the front of the boiler control box.

BOILER DISPLAY

Under normal conditions of operation the following characters will indicate:-

- 0 Electricity supply ON but secondary controls switched OFF and boiler control switch in mid position
- L Boiler operating at lower flow temperature
- H Boiler operating at higher flow temperature
- h Boiler operating but up to temperature
- t Boiler restart delayed to prevent rapid cycling. (Max. delay time is 5 mm)
- c Main burner off, pump running to transfer remaining heat from boiler into the system
- F FLASHING. Boiler at lock-out

Other characters will be displayed if a fault condition should occur. Their purpose is to assist the service engineer and more information is provided in the SERVICING section of these instructions.

OTHER BOILER CONTROLS

All boiler mounted controls are designed so that if any fault should occur they will fail safe. No further setting or checking is necessary.

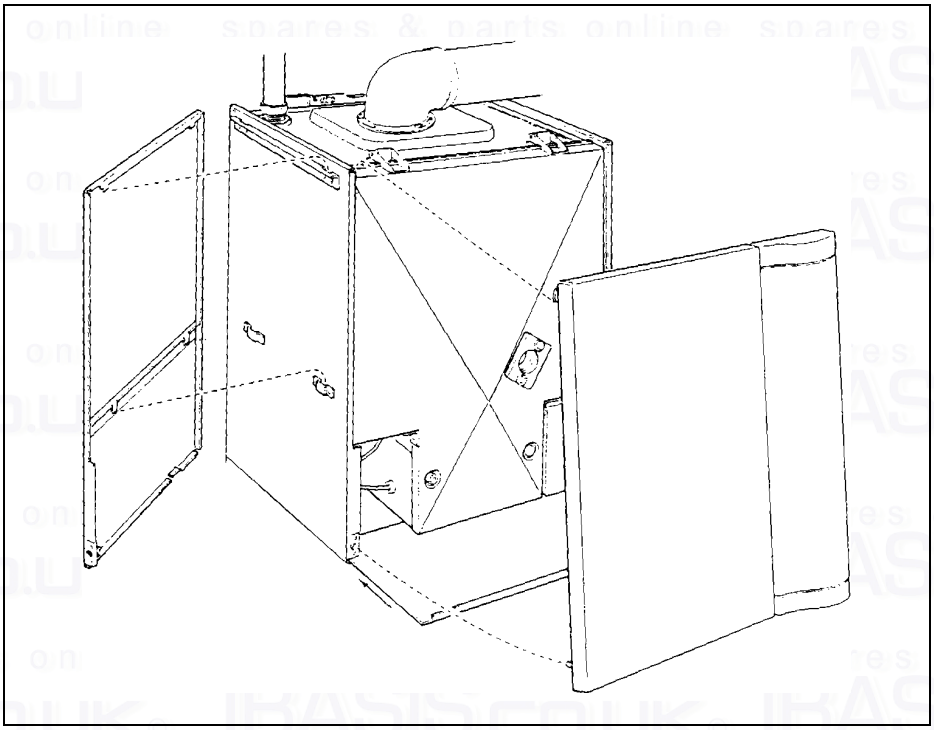

FIG. 14 CASE ASSEMBLY

Attach casing side panels onto the boiler as illustrated ensuring that the four lugs on each panel are correctly located. Slide in the bottom panel and push fully home. Engage hooks on the top rear of the front panel into the slot in the top front corner of each side panel. Lower the front panel to engage brass studs into the retaining clips, press fully home to lock panel into position.

EXTERNAL CONTROLS

Check that any other external control connected in the system, such as clocks and thermostats, control the boiler as required.

USER'S INSTRUCTIONS

A user's instruction leaflet is provided with this boiler but the householder must have the operation of the boiler and system explained by the installer. THE HOUSEHOLDER MUSTALSO BE ADVISED OF THE IMPORTANCE OF ANNUAL SERVICING and of the precautions necessary to prevent damage to the system and building, in the event of the system remaining out of commission in frost conditions.
Information must also be passed to the customer on the type of corrosion inhibitor that has been added to the system and of the need to maintain the correct concentration levels as recommended by the manufacturer.

SERVICING & REPLACING PARTS – Page 20

It is the law that all gas appliances are installed and serviced by a competent person as stated in Gas Safety (Installation and Use) Regulations 1994. For Health and Safety Information see page 35.

Electrical test work and servicing should be carried out by a competent person in accordance with the I.E.E. Wiring Regulations.

Regular skilled servicing and cleaning of the appliance is essential to ensure continued safe and efficient operation. The frequency of cleaning will depend upon the particular installation conditions, and the use to which the appliance is put, but in general, once a year should be adequate.

The boiler DATA PLATE and WIRING DIAGRAM are located on the front of the boiler functional casing. The boiler code number which is on the code badge located on the boiler top panel see FIG.2 should always be quoted when ordering spares or requesting information.

Before commencing the servicing of the boiler it is advisable to carry out a precheck on the boiler to establish that it is functioning correctly.

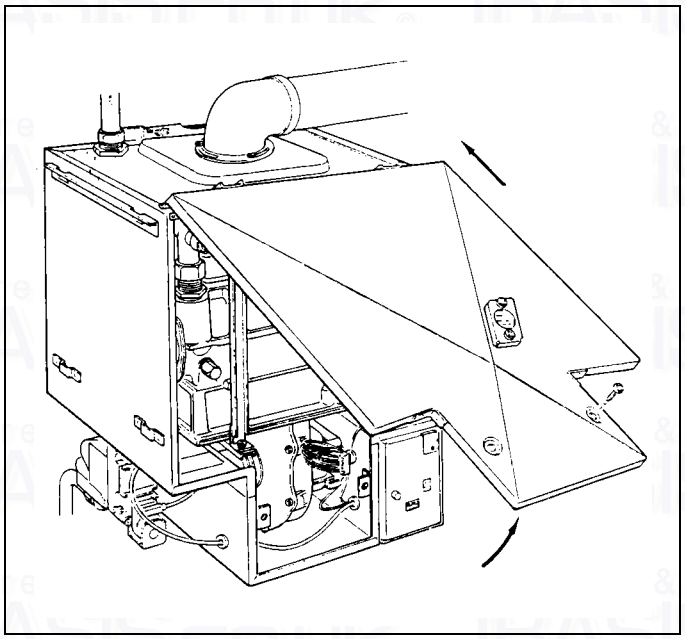

FIG. 15 REMOVING FUNCTIONAL CASE DOOR

a) Set boiler control switch to the mid i.e. "0" and the display should read "0".

b) Set boiler control switch to "H", the display should read "H" and the boiler should light.

Note: If the boiler fails to start or does not follow the sequence above then refer to fault finding section on Page 27.

WARNING

Before the start of any servicing or replacement of parts ensure that you have:

a) Switched off at the external electrical supply by removing the plug from the wall socket or by switching off the appliance at the external isolating switch.

b) Isolated the gas supply at the boiler service cock.

PREPARATION OF THE BOILER

Preparation for servicing should be carried out in the following manner.

1) Remove decorative outer casing door by pulling the bottom of the door from its fixing clips and pushing upwards until it is clear of its top fixing.

2) Remove bottom decorative panel.

3) Remove functional case door by undoing the two lower securing screws and lift door off the two upper hinge brackets. FIG. 15.

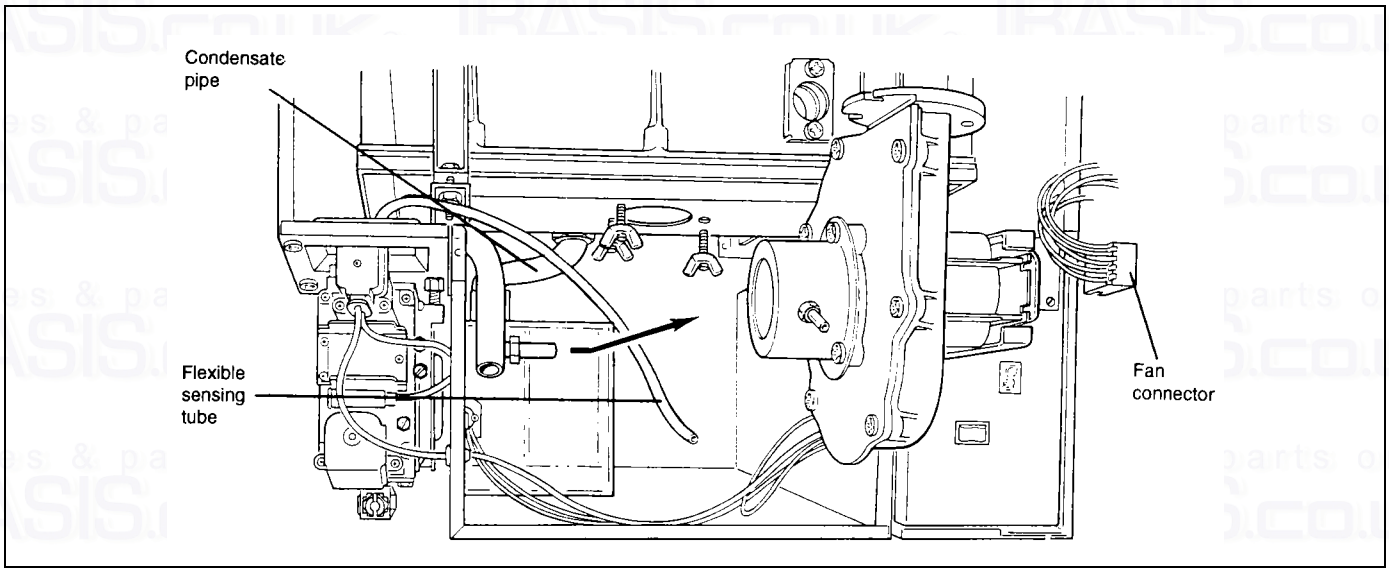

FIG. 16 REMOVING FAN

REMOVING FAN

1) Disconnect electrical connection from fan motor. FIG. 16.

2) Disconnect flexible sensing tube from the fan inlet housing. FIG. 16.

3) Remove fan by slackening two wing screws on left hand side and removing the MS wing screw on the right hand side of the fan. FIG. 16.

4) Slide fan to the right then forward and remove from boiler. FIG. 16.

REMOVING COMBUSTION CHAMBER AND FLUE HOOD

5) Disconnect flexible condensate pipe from the rear of the combustion chamber/sump casting. FIG. 16.

6) Disconnect inline connectors for the hot surface igniter and the flame sensor on the right hand side of the combustion chamber. FIG. 17.

Note the hot surface igniter is a fragile component and requires extreme care when handling.

7) Remove two M6 screws retaining clamps around flue hood and combustion chamber. FIG. 17.

8) Remove the top clamps from their anchor points at the rear of the casing. FIG. 17.

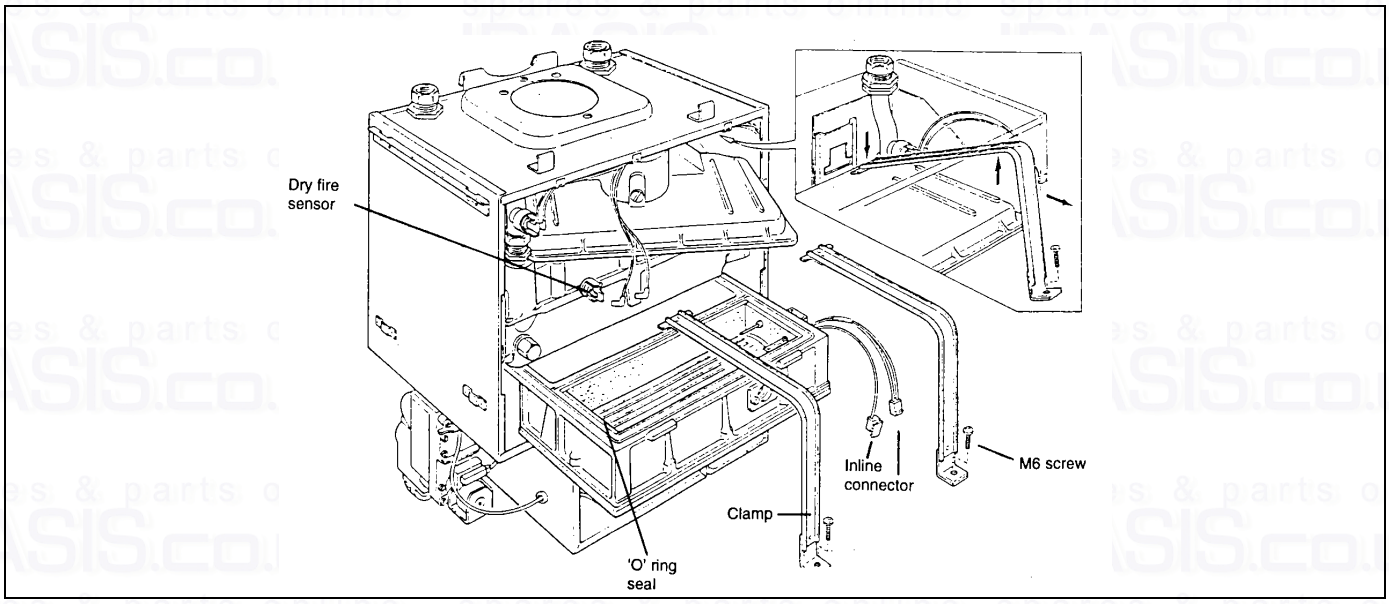

FIG. 17 REMOVING CLAMPS

REMOVING COMBUSTION CHAMBER AND FLUE HOOD - Continued.

9) Disconnect electrical connections from dry fire sensor. FIG.17.

10) Fold back gaiter between the flue hood and elbow. FIG.18.

11) Carefully remove flue hood by moving the right hand side of the flue hood forward and gently guide the hood around the flow tapping on the heat exchanger. FIG. 17.

12) Pull combustion chamber forward until it is clear of the boiler casing.

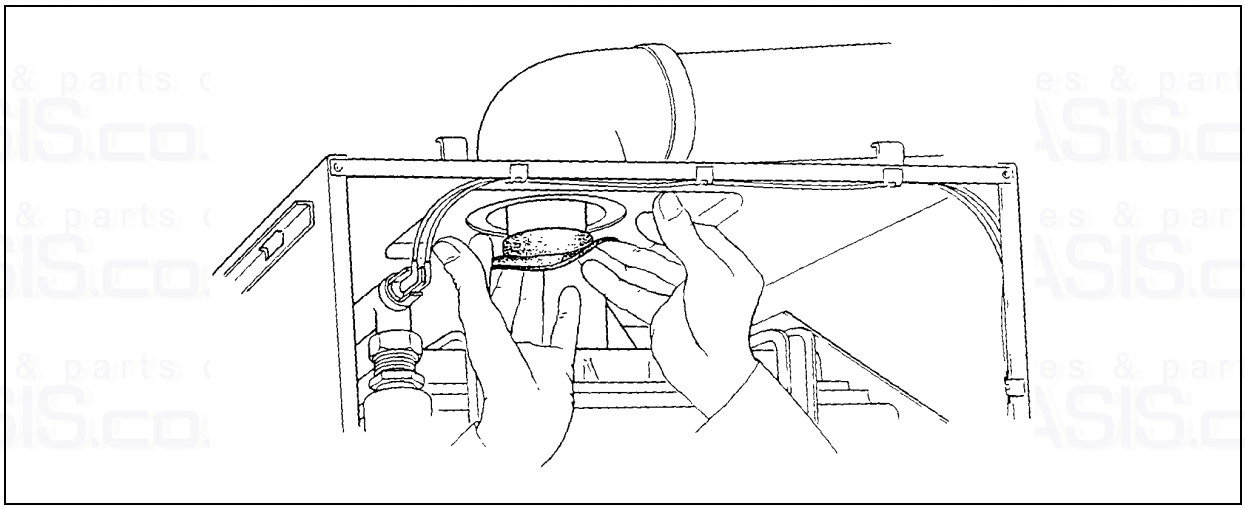

FIG. 18 FOLDING BACK FLUE SEALING GAITOR

EXAMINATION OF FLUE WAYS AND CLEANING

1) Place a sheet of clean paper over the inlet of the condense syphon and the gas assembly. It is particularly important that debris is prevented from entering the short upward facing tube from the gas control valve.

2) Cleaning of the heat exchanger must be carried out using a Potterton scraper Part No. 907736.

3) Working from below and above the heat exchanger remove all deposits from between the fins.

4) Examine top and bottom sealing face of the heat exchanger for deep scratches and remove any debris with a soft brush to provide a smooth flat sealing face.

5) Examine Syphon for evidence of leakage or build up of debris.

Note Place a catch tray beneath the syphon cleaning eye plug and remove plug this should remove any debris which has collected in the type section. If necessary the syphon should be removed and flushed with tap water. See replacement of parts for further information.

RE-ASSEMBLY OF BOILER

6) Before reassembling combustion chamber and flue hood to the boiler examine for the following:-

- The “O” ring seals for damage
- The insulation in the combustion chamber. **Note** if there is any visible deterioration of this material it must be replaced
- Damage to the hot surface igniter
- Damage to the surface of the burner
- Damage to sight glass
- Build up of debris in the condensate sump (This may be removed with a soft brush)

If any of the above components require changing see section **“Replacement of Parts”** for further information.

7) Replacement of components is the reverse of removal.

Note great care should be taken not to damage the flue hood and combustion chamber seals during replacement of these assemblies.

8) When refitting straps ensure that they are located correctly in the guides on both the flue hood and combustion chamber.

9) Ensure that screws are fully tightened and clamps fix the combustion chamber and flue hood securely.

10) Ensure connection from sump to syphon is made before refitting fan.

11) Ensure that the gaitor between the flue hood and elbow is correctly positioned untwisted and forms a good seal to both components.

12) Relight the boiler as described by following the lighting procedure in the commissioning section of these instructions.

REPLACEMENT OF PARTS

Before replacing any component carry out pre-check detailed at the beginning of the Service section and then refer to fault finding section of these instructions.

WARNING
Before the start of any servicing or replacement of parts ensure that you have:

a) Switched off at the external electrical supply by removing the plug from the wall socket or by switching off the appliance at the external isolating switch.

b) Isolated the gas supply at the boiler service cock.

If the combustion chamber has been removed follow procedure in Service section "Re-assembly of boiler"

1) FAN

a) Follow procedure in "Preparation for servicing" at the beginning of the servicing section.

b) Replacement of fan is the reverse of removal.

2) HOT SURFACE IGNITER
WARNING this component is fragile and requires careful handling.

a) Remove combustion chamber as described in **"Servicing Boiler".**

b) The igniter assembly is retained by two MS pozi drive screws. Remove screws and carefully remove old igniter, if the igniter has become damaged, invert the combustion chamber and shake gently to allow damaged segments to be removed from the chamber. See FIG. 19.

c) Replacement of the igniter is the reverse of removal ensure that a new sealing gasket is always fitted and that a good seal is made between the igniter and combustion chamber.

3) FLAME SENSOR

a) Remove combustion chamber as described in **"Servicing Boiler".**

b) Remove screw retaining sensor and withdraw from the combustion chamber. See FIG. 19.

c) Replacement of the sensor is the reverse of removal, ensure new gasket is always fitted.

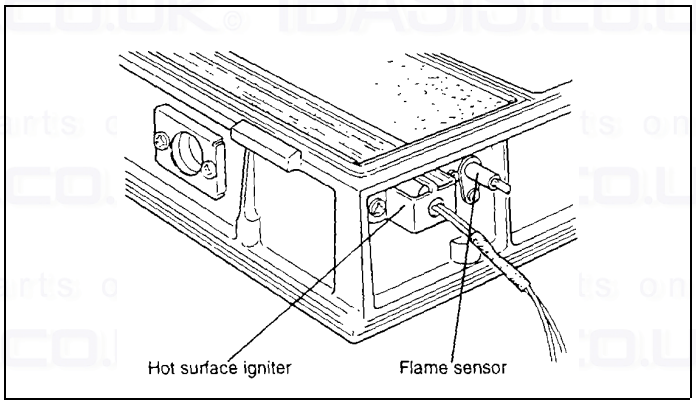

FIG. 19 HOT SURFACE IGNITER & FLAME SENSOR

4) INSULATION
Note all four insulation pads must be replaced.

a) Remove combustion chamber as described in **"Servicing Boiler".** See FIG. 17.

b) Remove burner FIG. 20 hot surface igniter and flame sensor. FIG. 19.

c) Remove old insulation.

d) Replace front pad first ensuring that bevelled edge is uppermost and fits into the chamber correctly.

e) Fit rear pad and use end insulation to retain rear pad.

4) INSULATION (Continued)

f) Carefully replace burner.

g) Refit hot surface igniter WARNING this component is fragile and requires careful handling.

h) Replacement is the reverse of removal.

5) BURNER

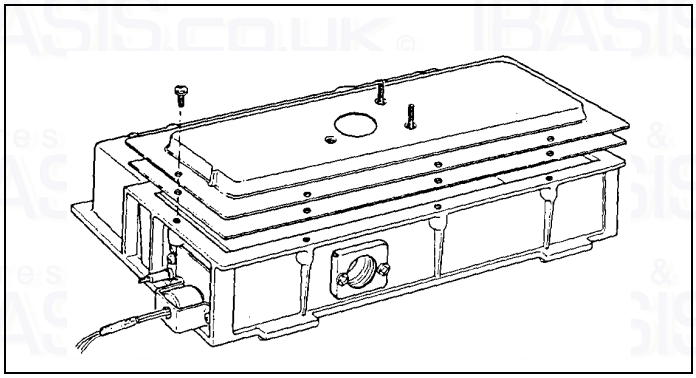

FIG. 20 REMOVAL OF BURNER

a) Remove combustion chamber as described in **"Servicing Boiler".**

b) Remove 8 M5 screws retaining burner to the combustion chamber. FIG. 20.

c) Remove burner from the combustion chamber.

d) Ensure the burner is fitted with the gasket supplied with it.

e) Taking care not to damage the burner surface, install new burner into combustion and secure with 8 screws.

f) Reassemble as described in section **"Servicing Boiler".**

6) SYPHON

a) Remove decorative and functional doors as described in **'Servicing Boiler".**

b) Remove fan see **"Servicing Boiler"**.

c) Disconnect flexible condensate pipe from the rear of the combustion chamber/sump casting. FIG. 16.

d) Disconnect syphon from its wastepipe. See FIG. 11.

e) Undo nut securing Syphon to the bottom of the boiler casing.

f) Relacement of the Syphon is the reverse of removal.

See servicing instructions for reassembly of boiler.

7) FLUE HOOD/COMBUSTION CHAMBER SEALS.

a) Remove combustion chamber/fluehood as described in "Servicing Boiler" See Fig.17.

b) Remove old seal.

c) Clean groove Lising a soft brush or dry lint free cloth.

d) Ensure new seal is correct (flue hood and combustion chamber require different seals).

e) Lay seal over groove and gently push into the groove until fully home.

See **servicing instructions** for reassembly of boiler.

8) INJECTOR

a) Remove decorative and functional doors as described in **"Servicing Boiler".**

b) Remove fan see **"Servicing Boiler"**.

c) Remove injector by unscrewing from gas supply pipe.

d) Replacement is the reverse of removal.

9) GAS VALVE ASSEMBLY

Warning always ensure before filling that the correct assembly is being used, they are provided preset for different boiler outputs.

a) Remove decorative and functional doors as described in **"Servicing Boiler".**

b) Remove fan as described in **"Servicing Boiler".**

c) Disconnect electrical supply lead at the gas valve by removing the two retaining screws and unplug.

d) Remove 4 M5 screws securing gas control valve to boiler service cock.

e) Remove 6 MS screws retaining gas assembly mounting plate 4 MS on the left underside of the plate and two within the casing. Remove MS screw attaching the valve to its mounting bracket.

f) Slide gas assembly forward and remove from boiler.

g) Remove flexible tube from assembly and fit to new gas assembly.

h) Replacement is the reverse of removal ensuring a new gasket is fitted between casing and mounting plate and the "0" ring seal is correctly positioned between the gas control valve and the boiler service cock.

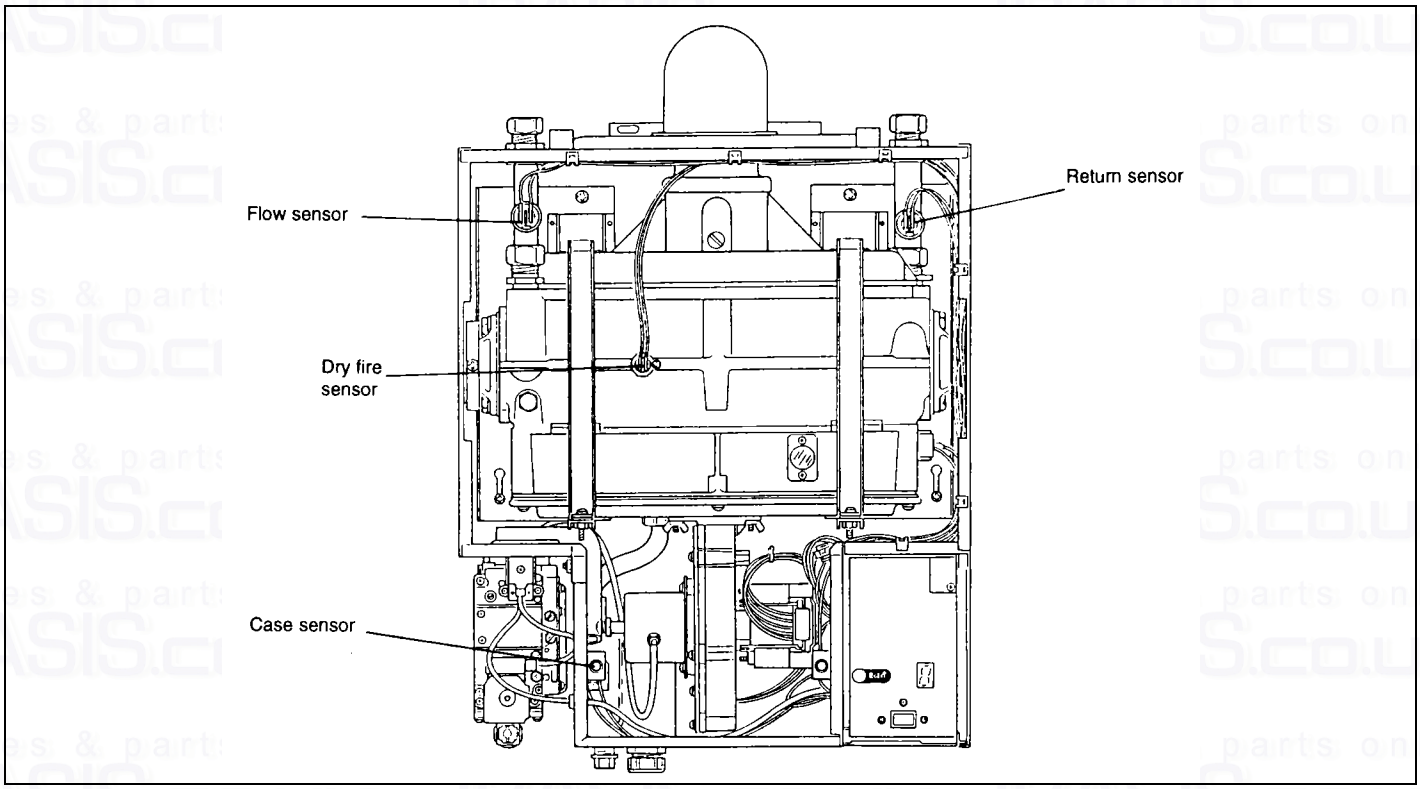

FIG. 21

10) SIGHT GLASS (COMBUSTION CHAMBER OR CASE DOOR).

Note care should be taken when handling and disposing of broken glass.

a) Remove decorative casing door if changing functional door sight glass or both decorative and functional doors if changing combustion chamber sight glass, as described in **"Servicing Boiler".**

b) Remove two screws retaining sight glass assembly and carefully remove from the combustion chamber or door.

c) Replacement is the reverse of removal ensuring a new gasket is fitted either side of the glass.

11) WATER TEMPERATURE SENSOR (FLOW AND RETURN).

a) Remove decorative and functional doors as **described** in **"Servicing Boiler".**

b) Disconnect two leads from the sensor and remove it by gently squeezing two protruding plastic lugs and while still squeezing pull from its housing.

c) Replacement is the reverse of removal ensure when fitting new sensor that sensor tip is coated with heat conducting paste and that it is correctly located and firmly home in its housing.

12) DRY FIRE TEMPERATURE SENSOR.

a) Remove decorative and functional doors as described in "Servicing Boiler".

b) Disconnect two grey leads from the sensor.

c) Remove retaining screw and gently pull sensor from the heat exchanger.

d) Replacement is the reverse of removal. Ensure that the sensor tip is coated with conductive paste and correctly located in its housing.

13) CASE TEMPERATURE SENSOR.

a) Remove decorative and functional doors as described in "Servicing Boiler".

b) Disconnect two yellow leads from the sensor.

c) Remove fixing screw from mounting bracket.

d) Remove sensor

e) Replacement is the reverse of removal.

14) BOILER CONTROL BOARD.

IMPORTANT
Before replacing the control board refer to fault finding section of these instructions. The control should only be replaced if the diagnostic display indicates it is faulty.

a) Remove decorative and functional doors as described in “Servicing Boiler”.

b) Remove screw retaining access door on under side of boiler. FIG. 22.

c) Remove screw retaining control front panel and tray. FIG. 22.

d) Gently pull front panel forward removing connectors from the control as they become accessible. FIG. 23.

e) Remove tray from boiler and carefully remove retaining screws at the rear of the control tray, single M4 and washer nut on the top of the control and plastic fixings holding the board to the tray.

f) Replacement is the reverse of removal. Ensure that M4 nut and washer used to earth the control tray is refitted.

15) BOILER CONTROL BOARD FUSES.

a) Remove decorative & functional doors as described in **“Servicing Boiler”.**

b) Remove screw retaining access door on under side of boiler. FIG. 22.

c) Remove screw retaining control front panel and tray. FIG. 22.

d) Gently pull front panel forward removing connectors from the control as they become accessible. FIG. 23.

e) Remove old fuse and replace with the correct Potterton component T3 ISA Pt 933005.

f) Replacement is the reverse of removal.

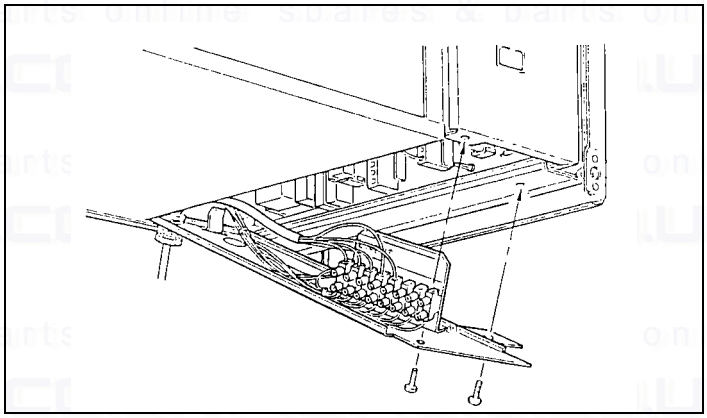

FIG. 22 REMOVING CONTROL SECURING SCREWS

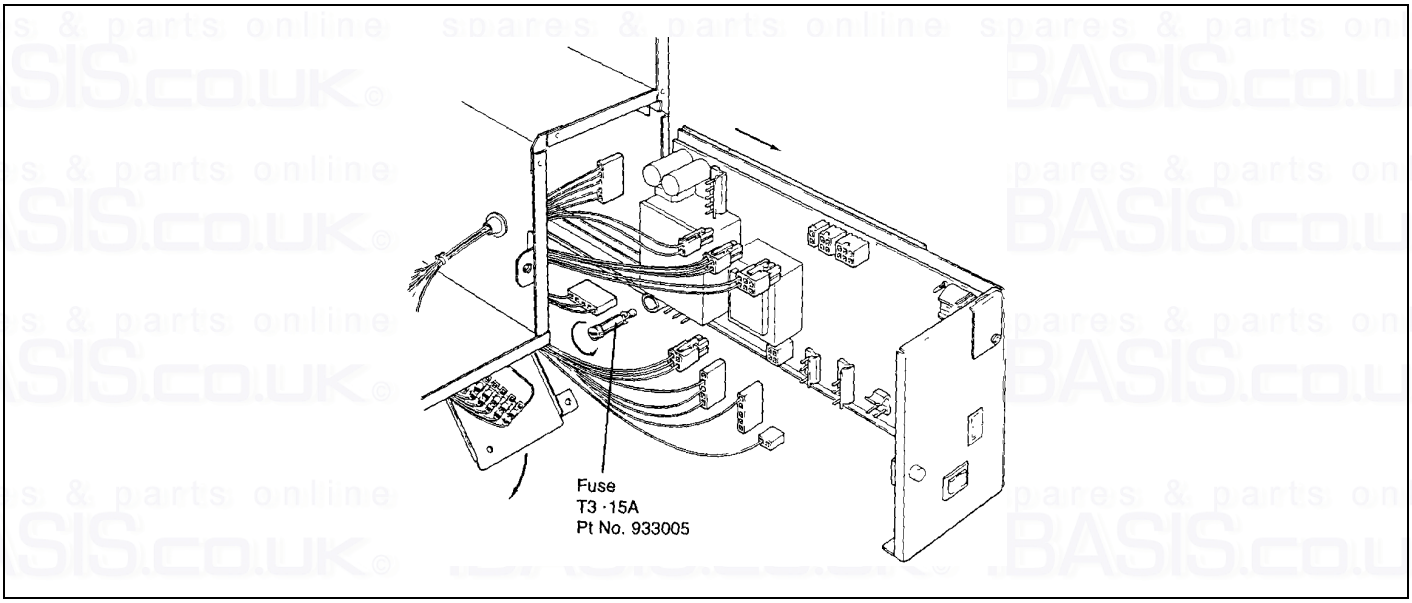

FIG. 23 REMOVING CONTROL TRAY

FAULT FINDING – DIAGNOSTIC DISPLAY – Page 27

DIGITAL DISPLAY

This boiler is fitted with a single digit display which is located in the front control box behind the hinged door.

The display on which up to 30 different characters can be illuminated performs two functions.

1. By displaying the following characters provides the user with a visual indication of the current boiler operating status.

   0 Power supply switched on but waiting a call for heat from secondary controls or boiler control switch is in the “O” position.

   L Boiler operating, low flow temperature selected.

   H Boiler operating, high flow temperature selected.

   h Boiler operating but up to temperature.

   t Boiler restart delayed to prevent rapid cycling (max delay time 5 mins).

   c Pump over run is operating.

   F FLASHING. Boiler at lockout.

   DISPLAY NOT ILLUMINATED – all power off.

2. By displaying the following characters it will assist the service engineer by working as a fault diagnosing system.

1	Sensor	Flow or return sensor out of calibration	See chart
2	Flow sensor	Flow sensor is incorrectly fitted	Check sensor
3	Case temperature	Temperature within boiler casing too high	See chart
4	Dry fire	Boiler has been fired without water	Check system
5	Flow sensor	Sensor failed open or closed circuit	Replace sensor
6	Return sensor	Sensor failed open or closed circuit	Replace sensor
7	Case sensor	Sensor failed open or closed circuit	Replace sensor
8	Dry fire sensor	Sensor failed open or closed circuit	Replace sensor
9	Fan speed	Fan speed incorrect	See chart
A	Shorted signal	Flame signal shorted to ground	Check igniter etc
C	Flame loss	Flame loss after initial detection	See chart
E	Control failed	Control has failed	Replace control
P	Wiring fault	Live on neutral connection	Correct fault

Preliminary Test Diagnostics

All boilers are fully tested before leaving the factory, therefore, if an electrical problem is experienced it is very likely that this is caused by faulty external wiring. If a problem exists disconnect all site wiring from the boiler. Connect a direct fused electrical supply to boiler terminals L, SwL, N and E and pump live to terminal marked pump L, taking a temporary neutral and earth connection for the pump from the boiler terminal block.

If boiler now operates correctly, site wiring should be further investigated.

AULT FINDING CHART (1) – Page 28

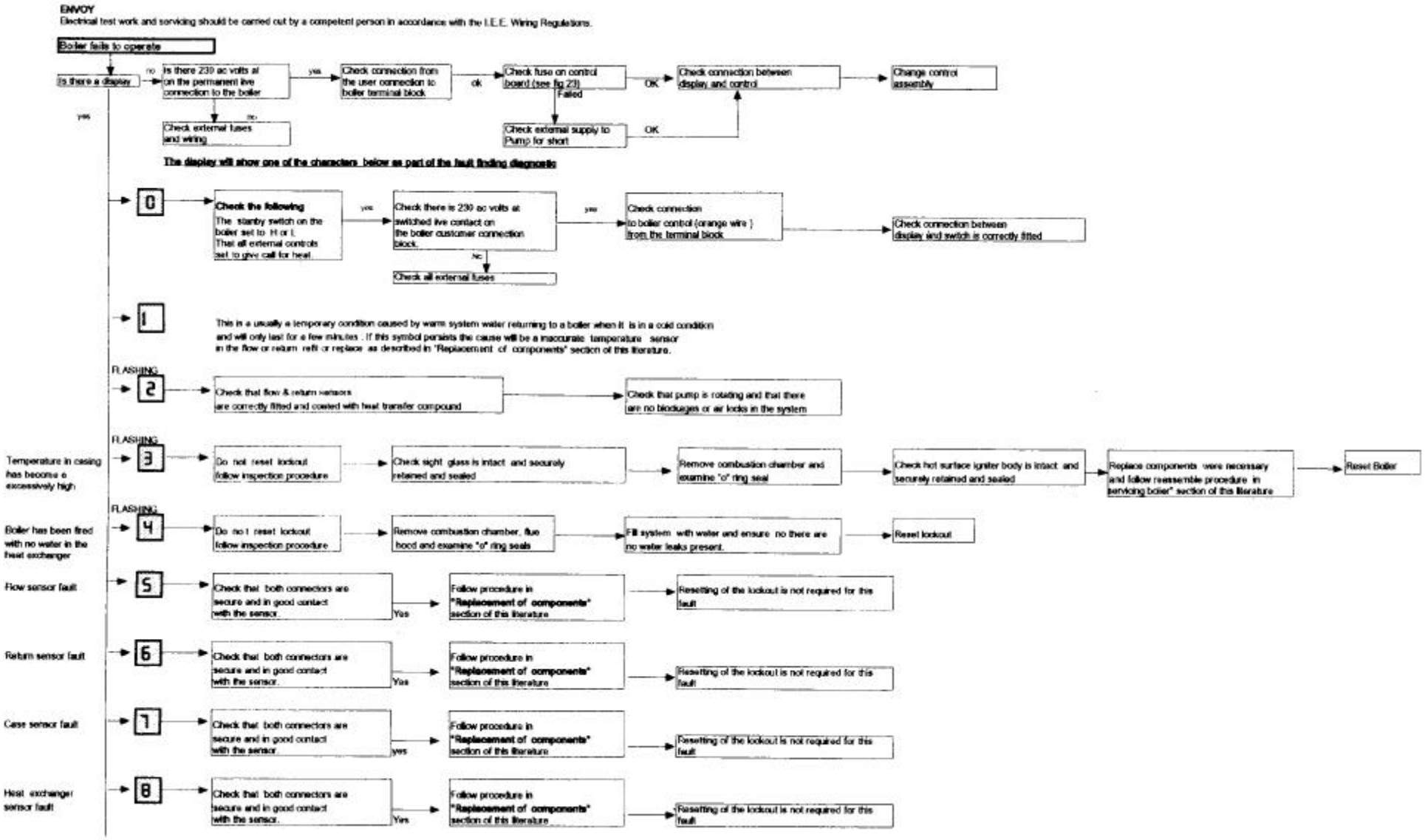

AULT FINDING CHART (2) – Page 29

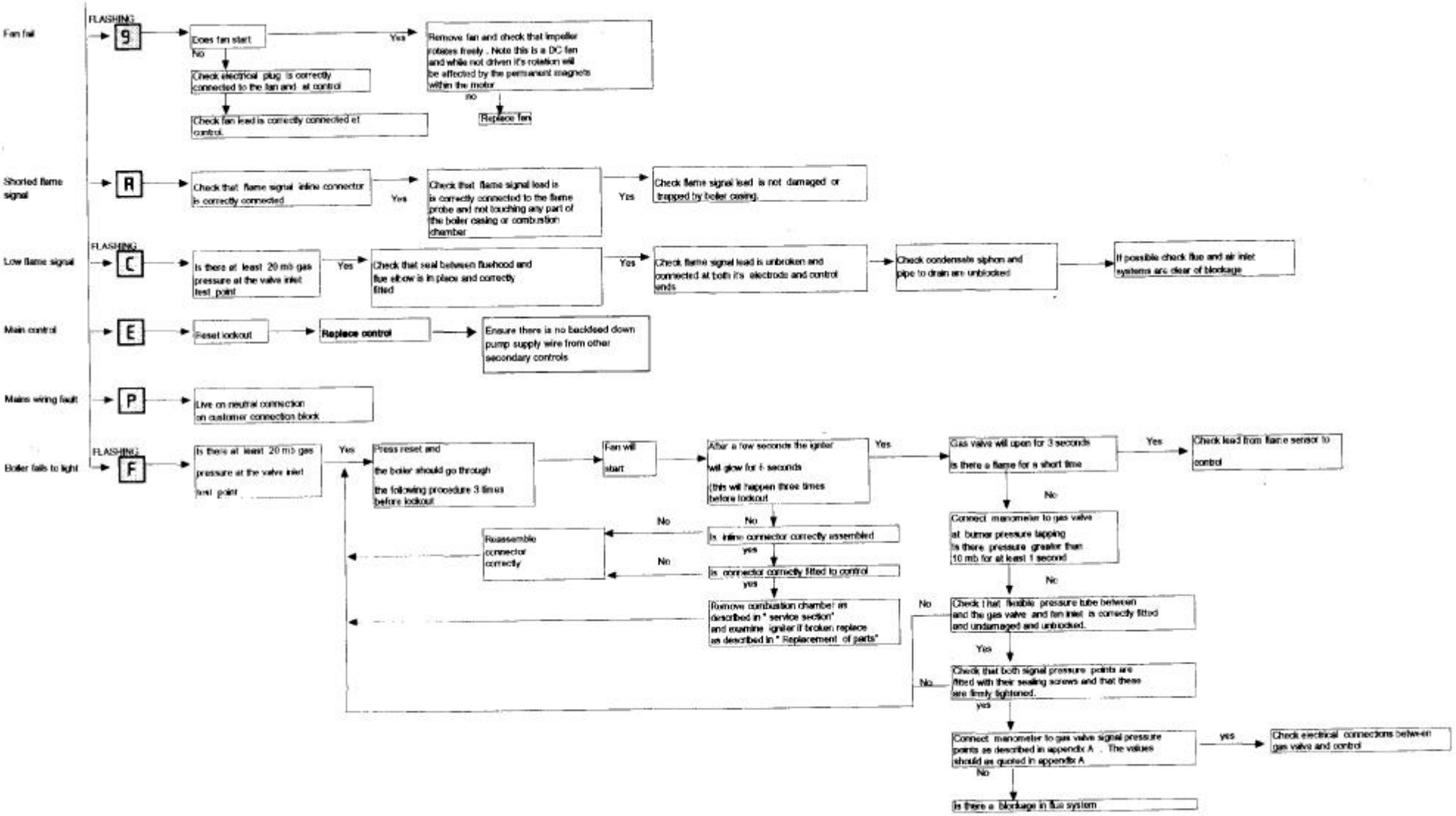

BOILER INTERNAL WIRING – Page 30

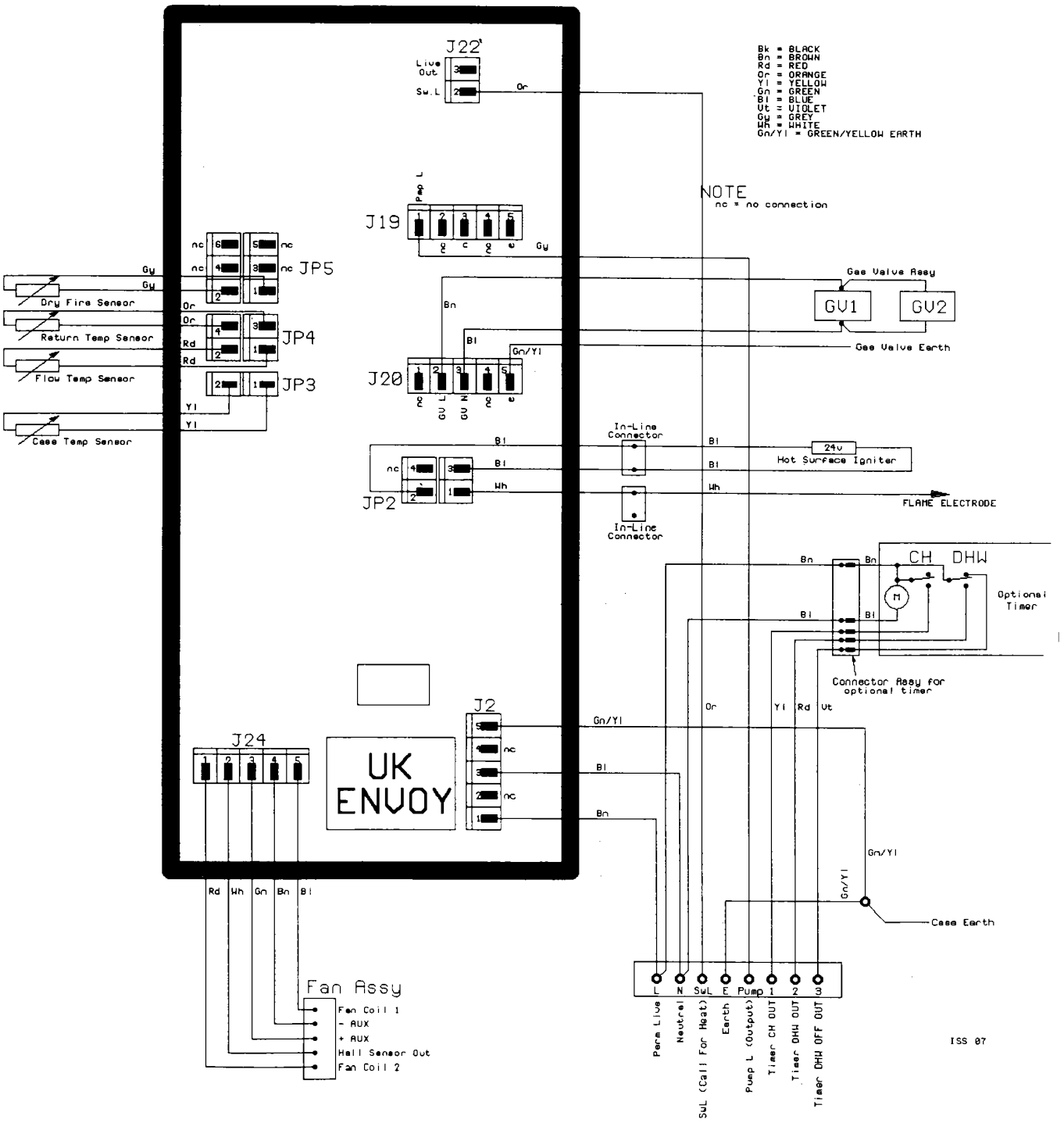

BOILER WIRING LAYOUT – Page 31

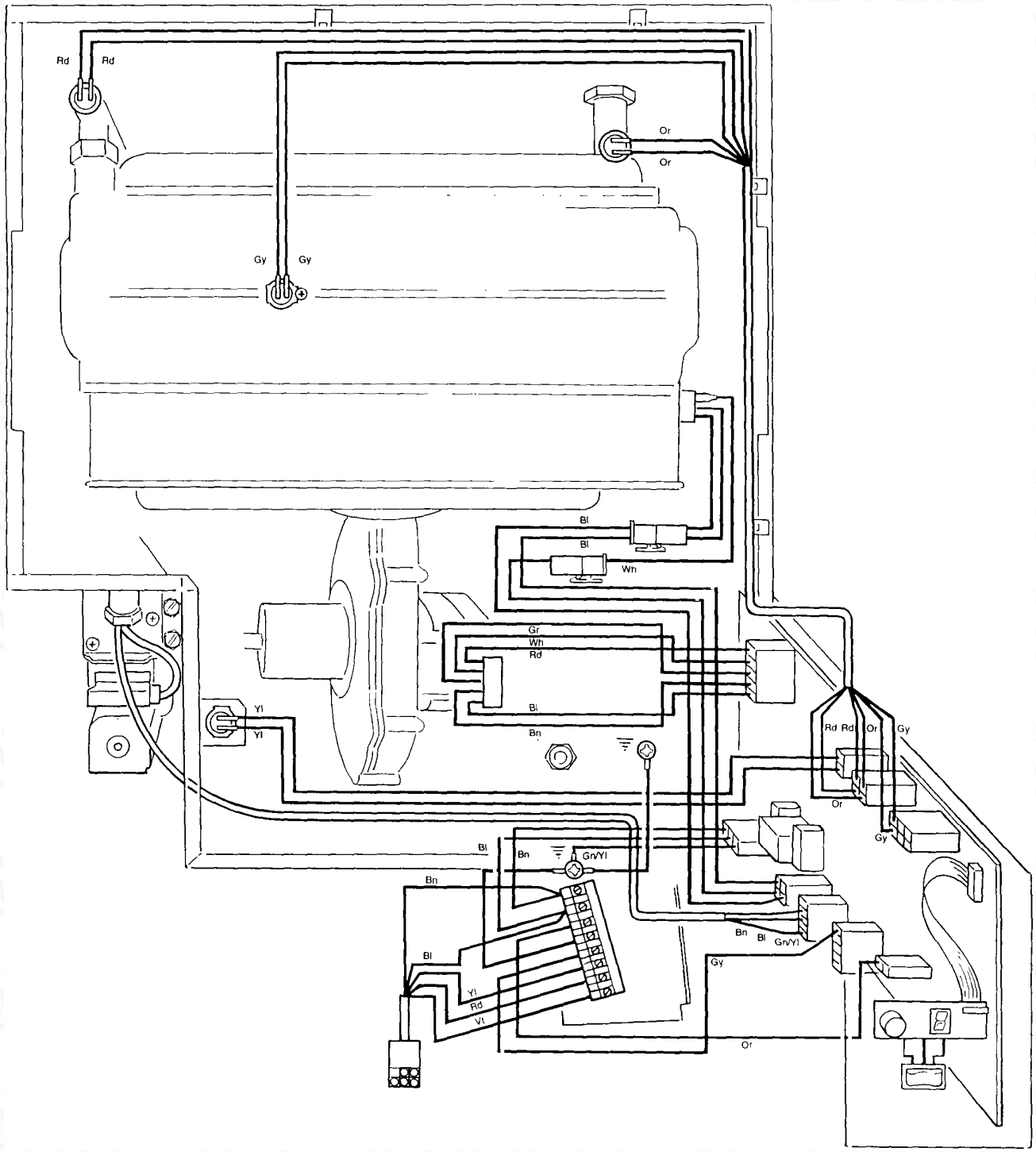

Burner pressure checking and adjustment procedure.

This appliance is fitted with a Gas/Air ratio control mixing valve. This gas valve ensures that the correct amount of gas is delivered to the burner to match the available air supply under all operating conditions. The burner pressure and gas rate have been precisely set and checked during manufacture and it is extremely unlikely that any further adjustment will be necessary.

To check the correct operation of the gas valve follow the instructions below carefully.

a. A good indication of correct operation of the boiler will be obtained by measuring the gas rate at the gas meter.

   1. Run the appliance for at least 10 minutes.

   2. With all other gas appliances turned off measure the gas rate at the meter for a period of at least 5 minutes. Check that the measured rate is within ± 5% of the rate stated on the data plate.

b. To measure the burner pressure.

   1. Turn off the gas service cock. Fit a pressure gauge to the gas inlet pressure tapping on the gas control valve. Connect a differential pressure gauge or “U” tube manometer between the burner pressure tapping (high pressure side) and the reference pressure tapping (low pressure side) on the gas valve (See FIG. 24).

   2. Turn on the gas service cock and run the appliance for at least 10 minutes. Check that the gas inlet pressure is between 19-20 mbar.

   3. Check that the differential burner pressure is within ± 0.5 mbar of that stated on the data plate.

   4. Turn off the gas service cock and remove the pressure gauge and replace the pressure tapping sealing screws on the gas valve.

A burner pressure reading outside the specified range does not necessarily indicate a wrongly adjusted gas valve. Other factors i.e. insufficient air flow will cause the gas valve to automatically adjust the burner pressure to maintain safe combustion. Before attempting to adjust the gas valve a check must be conducted on the whole appliance to ensure that any other faults present are found and rectified.

SETTING THE BURNER PRESSURE

WARNING

Setting the burner pressure requires the following equipment.

ESSENTIAL

1. A differential pressure gauge or “U” tube manometer capable of measuring pressures in the range 0-25 mbar (0-10 “H_2O) with a resolution of 0.1 mbar (0.05 “H_2O).

2. A differential pressure gauge capable of measuring pressures in the range of 0-2.50 mbar (0-1.00 “H_2O) with a resolution of 0.01 mbar (0.005 “H2O).

3. Sufficient flexible tube and “T” piece connector to enable these instruments to be connected to the gas valve in the arrangement shown in FIG. 24.

ADVISABLE

A CO_2 analyser capable of measuring CO_2 concentrations in the range 0-15% with a resolution of 0.1%.

1. Remove sealing screws and connect the two differential pressure gauges to the gas valve as shown in Fig. 24 and remove the adjustment screw sealing cap.

2. Run the appliance for at least 10 minutes.

3. Note the gas valve signal pressure (differential pressure gauge 2) set the burner pressure (differential pressure gauge 1) to the corresponding value shown in Fig. 25 for the appropriate boiler. Screw the adjuster in to decrease pressure and out to increase pressure.

4. If a CO_2 analyser is available check that the flue gas CO_2 concentration is in line with the value given in the FIG.25.

If a new burner or fan has been fitted it may be necessary to adjust the fan speed offset to achieve the correct gas valve signal pressure. This is accessible by carrying out the following procedure.

Press the reset button and hold in for 10 secs. At this time a number between 0 & 6 will be displayed. It is possible to adjust the fan speed within this range by setting the boiler control switch to L and return it to the mid position to lower the speed and switch to H to increase the speed. Press the reset button once to return to normal operation.

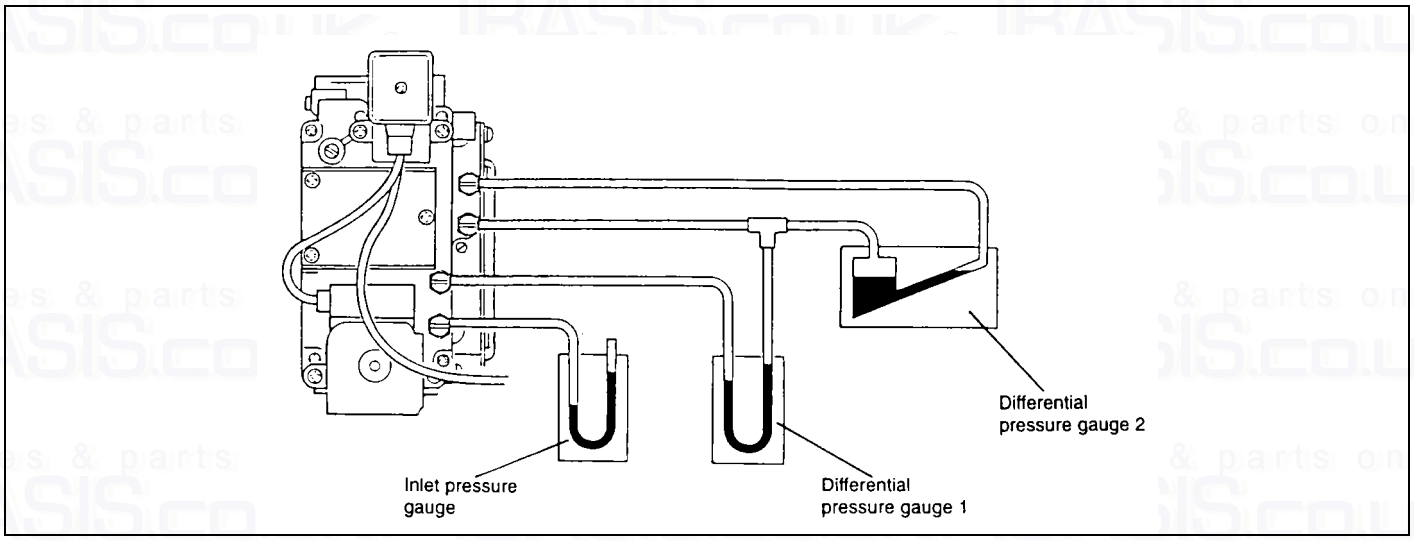

FIG. 24 GAS CONTROL VALVE ADJUSTMENT

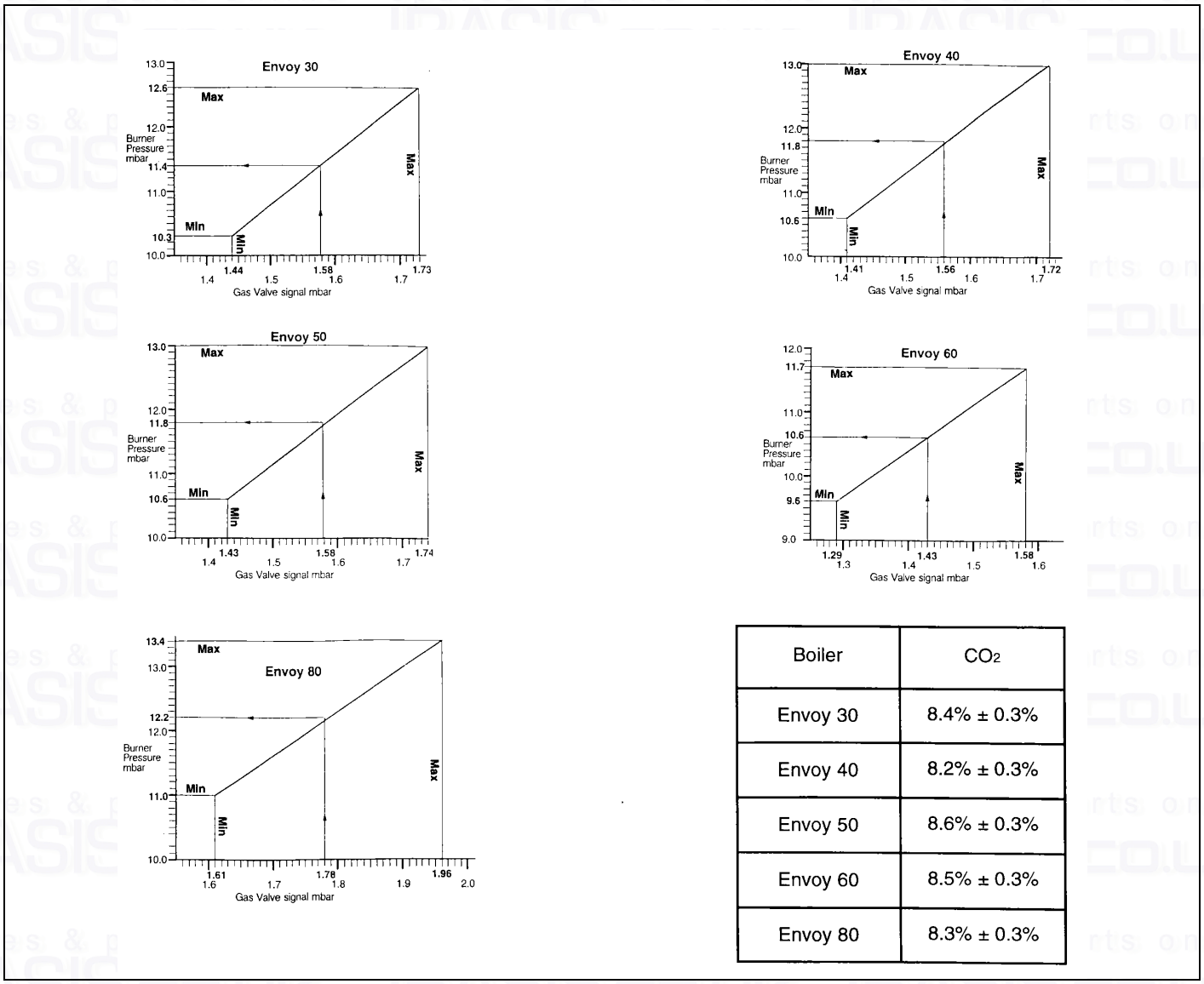

Boiler	CO_2
Envoy 30	8.4% ± 0.3%
Envoy 40	8.2% ± 0.3%
Envoy 50	8.6% ± 0.3%
Envoy 60	8.5% ± 0.3%
Envoy 80	8.3% ± 0.3%

FIG. 25 PRESSURE ADJUSTMENT GRAPH
Signal and Burner Pressures are based on a Burner Injector with a nominal flow rate.

SHORT PARTS LIST – Page 34

	Description of part		P/M Part No	G.C. Part No
1	Gas Valve Assembly	30 Boiler	930103	114621
		40 Boiler	930104	114622
		50 Boiler	930105	114623
		60 Boiler	930106	114624
		80 Boiler	930107	114625
2	Injector 30 Boiler		411014	114662
	Injector 40 Boiler		411007	114663
	Injector 50 Boiler		411008	114664
	Injector 60 Boiler		411009	114665
	Injector 80 Boiler		411010	114666
3	Fan 30, 40 Boilers		409584	114569
	Fan 50, 60, 80 Boilers		409592	E00040
4	Control Assembly		407734	114629
5	Temperature Sensor		404513	378868
6	Burner 30 Boiler		414727	378870
	Burner 40 Boiler		414728	378871
	Burner 50 Boiler		414729	378872
	Burner 60 Boiler		414730	378873
	Burner 80 Boiler		414731	378874
7	Burner Gasket		236120	114561
8	Fan Outlet Gasket		236253	114596
9	Hot Surface Igniter		407728	378869
10	Flame Sensor		407729	378876
11	Combustion Chamber “O” Ring Seal		236123	114556
12	Flue Hood “O” Ring Seal		236122	114544
13	Flue Gaitor		236139	114618
14	Flue Scraper		907736	337862
15	Fuse T3 .15A (Not Illustrated)		933005	114681

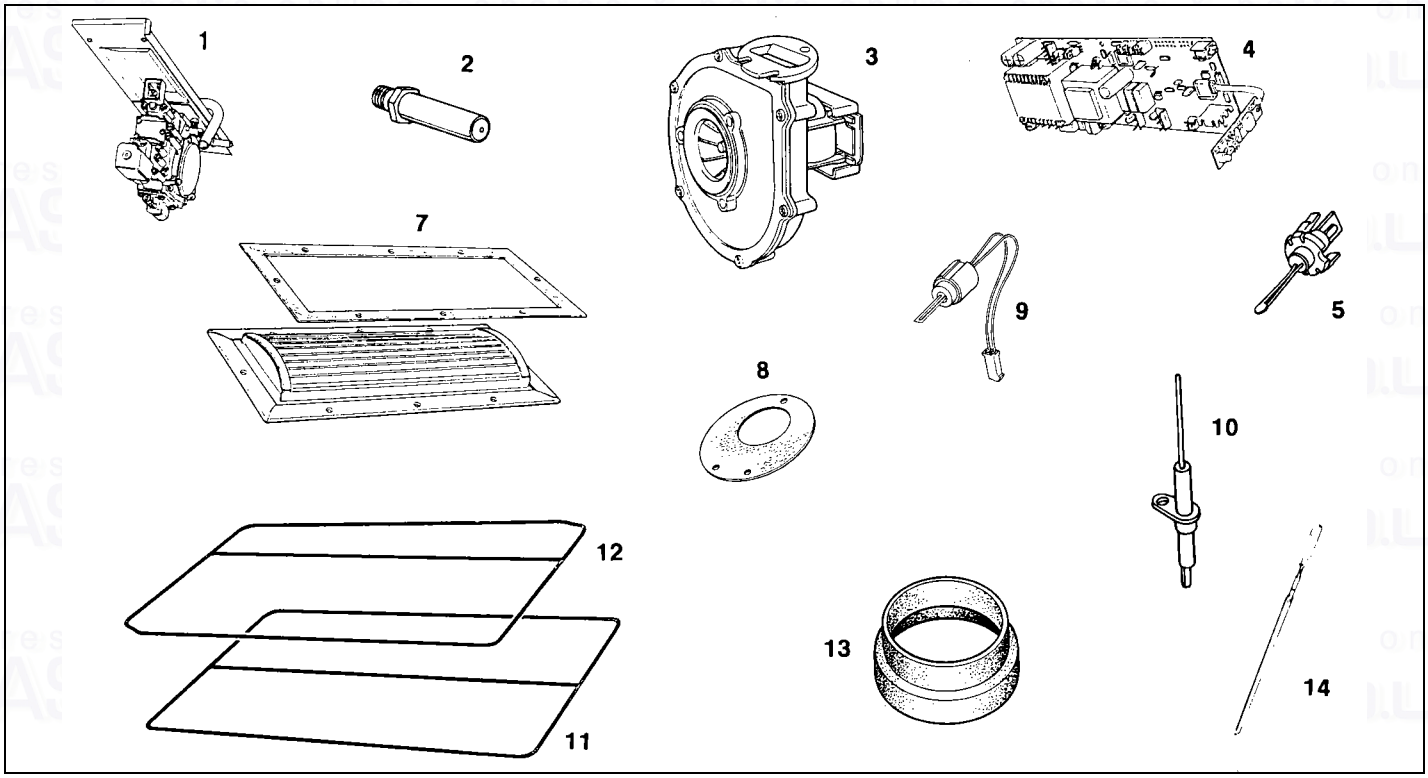

HEALTH AND SAFETY INFORMATION FOR THE INSTALLER AND SERVICE ENGINEER – Page 35

Health and Safety for the Installer and Service Engineer.

Under the Consumer Protection Act 1987 and Section 6 of the Health and Safety at Work Act 1974, we are required to provide information on substances hazardous to health. Small quantities of adhesives and sealants used in the product are cured and present no known hazards. The following substances are also present.

Insulation and Seals

Material - Ceramic Fibre, Alumino - Silicone Fibre.

Description - Boards, Ropes, Gaskets.

Known Hazards - Some people can suffer reddening and itching of the skin. Fibre entry into the eye will cause foreign body irritation. Irritation to respiratory tract.

Precautions - People with a history of skin complaints may be particularly susceptible to irritation. High dust levels are only likely to arise following harsh abrasion. In general, normal handling and use will not present discomfort, follow good hygiene practices, wash hands before consuming food, drinking or using toilet.

First Aid - Medical attention must be sought following eye contact or prolonged reddening of the skin.

Back Page

spares & parts online IBASIS.CO.UK©