POTTERTON

Potterton Housewarmer 45 - G.C. No. 44 590 18
Potterton Housewarmer 55 - G.C. No. 44 590 19

Installation & Service Instructions

Housewarmer 45 & 55

Gas Fired Electronic Back Boilers

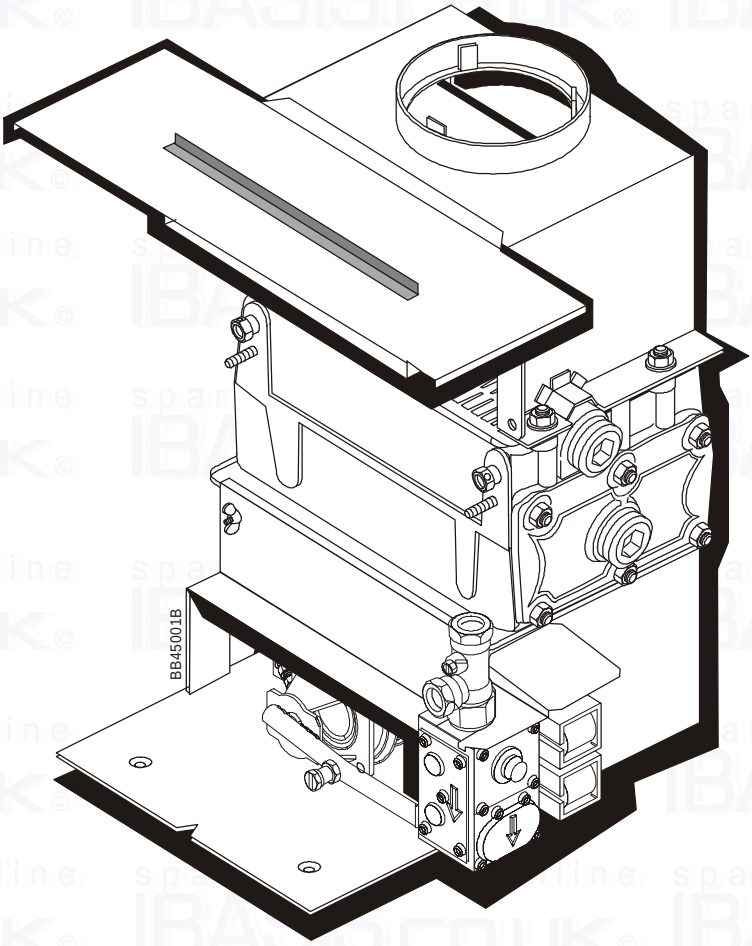

THE GAS SAFETY (INSTALLATION AND USE) REGULATIONS 1994 (as amended).

‘‘ In your own interest, and that of safety, it is law that all gas appliances are installed by competent persons, in accordance with the above regulations. Failure to install appliances correctly could lead to prosecution.’’

Installation must be in accordance with these installation & Service Instructions and the rules in force.

The polythene bags used for packaging are a potential hazard to babies and young children and MUST BE DISPOSED OF IMMEDIATELY.

LEAVE THESE INSTRUCTIONS WITH THE USER FOR USE ON FUTURE CALLS

For Use With Natural Gas
(G20) Only At 20mbar
For Use in GB & IE

IMPORTANT
PLEASE READ THIS BOOK BEFORE INSTALLING, OPERATING OR SERVICING THIS APPLIANCE.

IBASIS.CO.UK spares & parts online

Contents – Page 2

1. Technical Data.....3

2. General.....4

3. Installation Requirements 6

3.1 TheSystem 6
3.2 Fireplace Opening & Hearth.....10
3.3 Chimneys & Flues 11
3.4 Electricity Supply 12
3.5 Gas Supply.....12
3.6 Air Supply & Ventilation.....12

4. Installation 12

4.1 Pre-Installation Checks.....12
4.2 Install the Boiler.....12
4.3 Electrical Connections.....16

5. Commissioning 18

5.1 Commission the Boiler.....18
5.2 Final Adjustments.....18
5.3 Final Checks.....19
5.4 Re-check Flue Efficiency.....19
5.5 Install the Fire Front.....19
5.6 Instruct the User 19

6. Servicing & Replacement Of Parts... 20

6.1 Preparation.....20
6.2 Burner/Gas Valve Assembly.....20
6.3 Main Burner Injector 20
6.4 Lint Guard.....21
6.5 OxyPilot/Electrode Assembly.....21
6.6 Burner.....21
6.7 Gas Valve 22
6.8 Overheat Thermostat.....22
6.9 Control Thermostat.....22
6.10 Electronic Control Box 22
6.11 User Control Box 22
6.12 Heat Exchanger.....22

7. Fault Finding 24

8. Electrical Diagrams 25

9. Flow Diagrams 26

10. Short List Of Spares 27

Gas Fires

The Potterton Housewarmer 45 & 55 Back Boiler Units can be fitted with a variety of approved Potterton Housewarmer Gas Fires. The range comprises of Radiant, Live Fuel Effect and Inset Decorative Models.

Accessories

The following Potterton Myson controls are recommended for use with your boiler:-

Electronic Programmer EP2002, EP3002 or EP6002
Cylinder Thermostat PTT2 or PTT100
Room Thermostat PRT2 or PRT100
Frost Thermostat PRT100 FR
Motorised Zone Valve MSV222 or MSV228
Motorised Diverter Valve MSV322
Thermostatic Radiator Valve

Data sheets describing these products are available on request.

---

1. Technical Data – Page 3

	Potterton Housewarmer 45		Potterton Housewarmer 55	
Heat Input	16.8kW	(57,300Btu/h)	20.4kW	(69,620Btu/h)
Heat Output	13.2kW	(45,000Btu/h)	16.1kW	(55,000Btu/h)
Gas Rate	1.6m³/h	(56.5ft³/h)	1.95m³/h	(68.78ft³/h)
Inlet Pressure	20mbar		20mbar	
Burner Pressure	13.4mbar	(5.36in wg)	15.5mbar	(6.20in wg)
Classifications	I_{2H} & B11 AS		I_{2H} & B11 AS	
Burner	Aeromatic 7 Blade		Aeromatic 8 Blade	
Burner Injector	Multihole 1 off - 7 x 1.25mm		Multihole 1 off - 6 x 1.45mm	
Pilot Burner	SIT OxyPilot		SIT OxyPilot	
Spark Gap	3 to 6mm		3 to 6mm	
Ignition	Intermittent Pilot		Intermittent Pilot	
Electrical Supply	230-240v ~ 50HZ		230-240v ~ 50HZ	
Fuse Rating - External	3A		3A	
Packed Weight	41kg	(90.5lbs)	41kg	(90.5lbs)
Water Capacity	4 litres	(0.9 gal)	4 litres	(0.9 gal)
Gas Supply Connection	15mm Compression		15mm Compression	
Flow Connection	Rc1		Rc1	
Return Connection	Rc1		Rc1	
Injector Tee	28/22mm		28/22mm	
Maximum Flow Temperature	82°C		82°C	
Design Temperature Rise	11°C		11°C	
Maximum Static Head	30.5m	(100ft)	30.5m	(100ft)
Minimum Static Head	0.9m	(3ft)	0.9m	(3ft)
Head Loss at 11°C Temp. Rise:-				
without Injector Tee	0.05m	(1.9in)	0.06m	(2.7in)
with Injector Tee	0.28m	(11.0in)	0.40m	(16.0in)
Recommended Flow through Boiler	17.3 litres/min	(3.8 gals/min)	20.9 litres/min	(4.6 gals/min)
Flue Size	125mm	(5in)	125mm	(5in)

2. General – Page 4

Please read these Installation & Service Instructions and the one supplied with the Gas Fire before installing the boiler.

This Potterton boiler is part of a combined back boiler and gas fire unit, which should be fitted in a fireplace or standard builder's opening, at the base of a chimney.

This appliance is for use on Natural Gas (G20) only and MUST NOT be used on any other gas.

The combined appliance will be delivered in 2 or 3 packages depending on the chosen gas fire. One pack contains the boiler, the other contains the gas fire. If the fire chosen is an inset decorative then the facia will be the third pack.

Samples of the Potterton Housewarmer back boiler have been examined by British Gas Plc, a United Kingdom Notified Body, and the range is certified to comply with the essential requirements of the G.A.D. and is permitted to carry the CE Mark.

The installation must be in accordance with the following:-
Local Building Regulations
Latest edition of I.E.E. Regulations
By-Laws of the Local Water Undertaking and the Current Edition of the following standards:-

BS 5440:1	Flues (for gas appliances of rated input not exceeding 60kW)
BS 5440:2	Air Supply (for gas appliances of rated input not exceeding 60kW)
BS 5449:1	Forced Circulation Hot Water Systems
BS 5546	Installation of Gas Hot Water Supplies for Domestic Purposes
BS 5871	Installation of Gas Fires, Convectors and Fire/Backboilers
BS 6400	Specifications for Installation of Domestic Gas Meters (2nd family gases)
BS 6644	Boilers of Rated Input not exceeding 60kW
BS 6798	Specification for Installation of Gas fired Hot Water Boilers
BS 6891	Low Pressure Installation Pipes

British Gas Specifications for Wet Domestic Central Heating Systems.

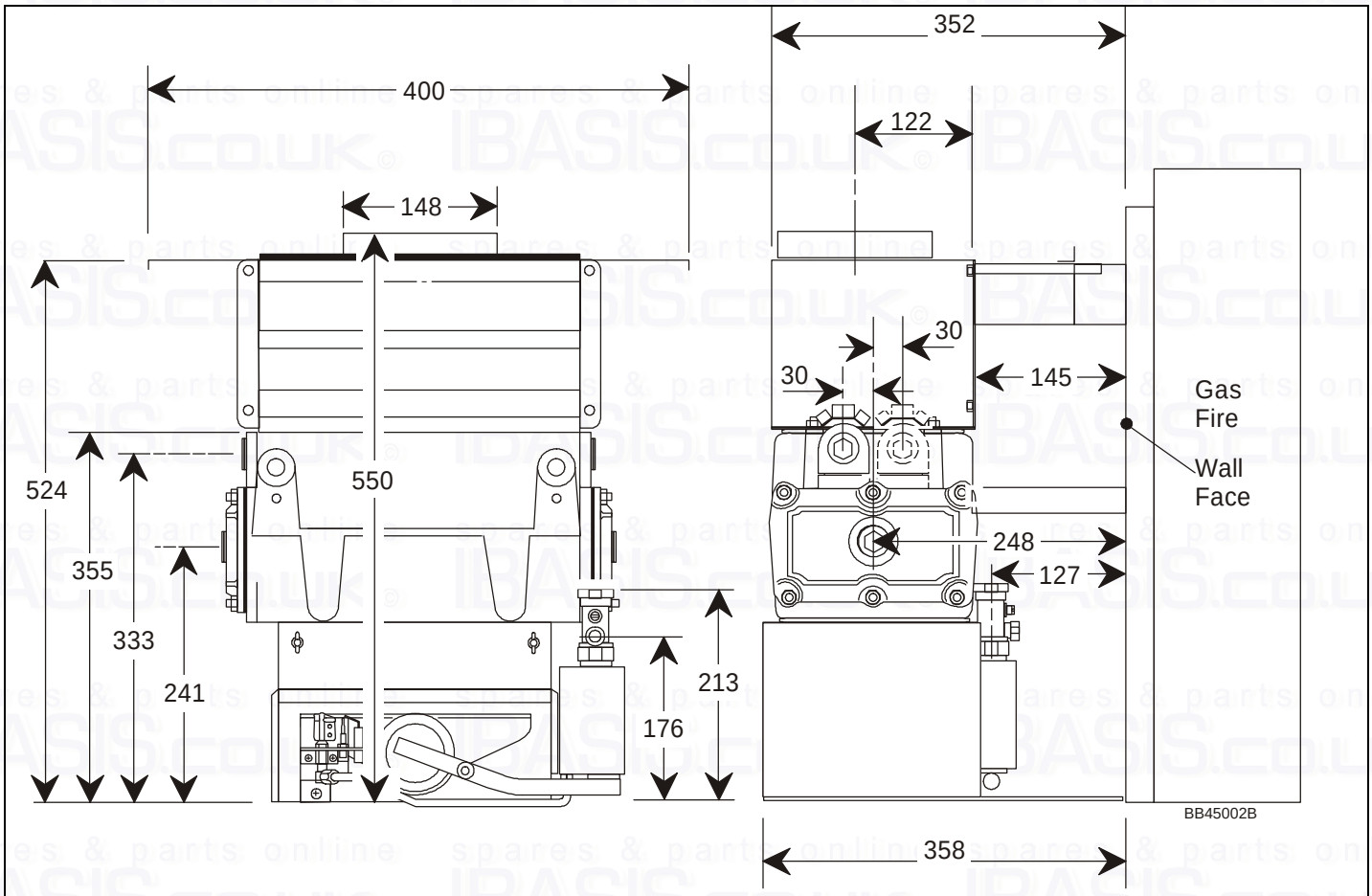

Fig. 1

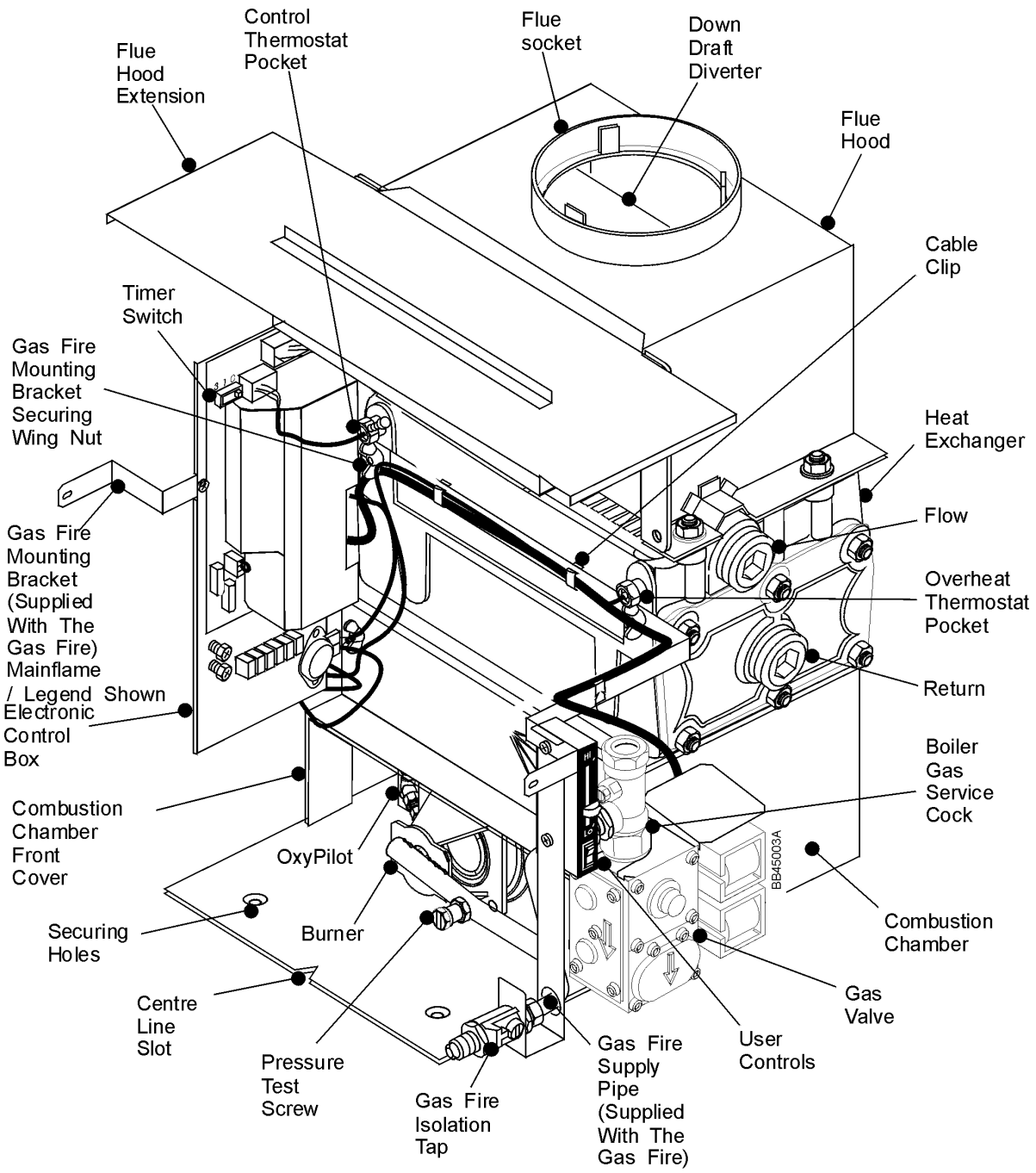

fig 2

IMPORTANT

This appliance has been certified for safety. It is therefore important that no external control device (e.g. flue dampers, economisers, etc.) be directly connected to the appliance unless covered by these Installation & Service Instructions or otherwise recommended in writing.

Any direct connection of a control device not approved by Potterton Myson Ltd, could invalidate the CE Certification and normal appliance warranty.

3. Installation Requirements – Page 6

3.1 The System

The boiler must be used on INDIRECT hot water systems only. It is suitable for use on open vented gravity domestic hot water/pumped central heating systems or, fully pumped systems which may be sealed or open vented.

The system should be designed so that the maximum static head does not exceed 30.5m (100ft) and a minimum on fully pumped systems of 0.9m (3ft). See Fig. 5.

Gravity domestic hot water circuits should have a minimum circulating head of 1.2m (4ft). See Fig. 4.

To prevent reverse circulation in the gravity circuit when the pump is running an injector tee is provided - See Fig.14. The orientation of the tee is not important.

The pump should preferably be fitted in the flow, though installation in the return is acceptable providing care is taken to ensure air is not drawn into the system due to the negative pressure effects of the pump. Isolating valves must be fitted as close as possible to allow replacement without system draining.

Drain off taps should be fitted in the pipework close to the boiler and in the low points of the system.

Combined Gravity Hot Water Pumped Central Heating Systems.

Where a cylinder thermostat and zone valve is used to control the temperature of the hot water it is recommended that a by-pass be installed in the gravity circuit. A suggested method of doing this is shown in Fig. 4. where the bathroom radiator is connected into the gravity circuit and is fitted with two lockshield valves. Mechanically operated thermostatic domestic hot water temperature control valves which allow the boiler to operate when the valve is closed or partially closed MUST NOT BE FITTED.

Note: Flow connections can be fitted to either upper tappings, return connections to either of the lower tappings. When not using the Injector Tee, the flow and return connections must be fitted on the same side.

Fully Pumped Systems

We recommend that if possible the pump be wired directly to the terminal block (See Fig. 17) as it will allow the pump to be controlled by the over-run device. This will ensure that the pump will continue to run after boiler shut down thus preventing nuisance operation of the overheat thermostat.

If the pump is not wired directly to the terminal block, then a by-pass circuit is not necessary.

If a three port diverter valve is used as shown in Figs.5 & 6, a by-pass is not necessary since one circuit is always open. Where a pair of two port valves are used, a by-pass is necessary. It should be fitted with a lockshield valve and be adjusted to maintain a minimum flow through the boiler of 4.5 litres/min (1 gal/min) see Figs. 5 & 6.
Systems fitted with controls which allow the boiler to operate when both the hot water and central heating circuits are closed i.e. mechanically operated thermostatic control valves, must be fitted with a by-pass circuit capable of:-

1. Dissipating a minimum of 1kW (3,400 Btu/h)
2. Maintaining a minimum water flow through the boiler of 9 litres/min (2 gal/min).

A suggested method of meeting these requirements by using a bathroom radiator fitted with two lockshield valves is shown in Figs. 5 & 6.

Diagrammatic layouts of a fully pumped system and a combined pumped central heating/gravity hot water system are shown in Figs. 4 & 5.

Sealed Systems (Fully Pumped)

Installation
The installation must comply with the requirements of BS 6798; 1987 and BS5449: Pt 1. The British Gas publication "British Gas Specification for Domestic Wet Central Heating Systems" should also be consulted.

Safety Valve
A non-adjustable spring-loaded safety valve, preset to operate at 3 bar (45lbf/in²) shall be used. It must comply with BS 6759: Pt 1. and include a manual testing device. It shall be positioned in the flow pipe either horizontally or vertically upwards and close to the boiler. No shut-off valves are to be placed between the boiler and the safety valve. The valve should be installed into a discharge pipe which permits the safe discharge of steam and hot water such that no hazard to persons or damage to electrical components is caused.

Pressure Gauge
A pressure gauge incorporating a fill pressure indicator, covering the range 0 - 4 bar (60 lbf/in²) shall be fitted to the system. It should be connected to the system, preferably at the same point as the expansion vessel. Its location should be visible from the filling point.

Expansion Vessel
A diaphragm type expansion vessel to BS4814: Pt 1. shall be fitted close to the inlet side of the pump. The connecting pipework should not be less than 15mm. Pipework connecting the expansion vessel should not incorporate valves of any sort. Methods of supporting the vessel are supplied by the vessel manufacturer. The nitrogen or air charge pressure of the expansion vessel shall not be less than the hydrostatic head, (height of the top point of the system above the expansion vessel).

3. Installation Requirements – Page 7

To size the expansion vessel it is first necessary to calculate the volume of water in the system in litres. The following volumes may be used as a conservative guide to calculating the system volume.

Boiler Heat Exchanger:	4 litres
Small Bore Pipework:	1 litre per kW of system output
Micro Bore Pipework:	7 litres
Steel Panel Radiators:	8 litres per kW of system output
Low Water Capacity Radiators:	2 litres per kW of system output
Hot Water Cylinder:	2 litres

If the system is extended, the expansion vessel volume may have to be increased unless provision has been made for extension. Where a vessel of the calculated size is not available, the next available larger size should be used. The boiler flow temperature is controlled at approximately 82°C.

The vessel size can now be determined from the information in Table 1 where V = System volume in litres.

Vessel Charge Pressure (bar)	0.5	1.5
Initial System Pressure (bar)	1.0	1.0
Expansion Vessel Volume (litres)	V x 0.11	V x 0.087

Table 1.

Cylinder
The hot water cylinder must be an indirect coil type or a direct cylinder fitted with an immersion calorifier suitable for operating at a gauge pressure of 0.3 bar (5 lbf/in^2) in excess of safety valve setting. Single feed indirect cylinders are not suitable for sealed systems.

Method of Make-up
Provision shall be made for replacing water loss from the system either:

i) from a make-up vessel or tank mounted in a position higher than the top point of the system, and connected through a non-return valve to the system on the return side of the hot water cylinder or the return side of all heat emitters. or

ii) where access to a make-up vessel would be difficult by using the mains top up method or a remote automatic pressurisation and make-up unit as shown in Figs. 7 & 8.

Mains Connection
There shall be no connection to the mains water supply or to the water storage tank which supplies domestic hot water even though a non-return valve, without the approval of the Local Water Authority.

Filling Point
The system shall be fitted with a filling point at low level which incorporates a stop valve to BS 1010 and a double check valve (approved by the National Water Council) to be fitted in this order from the system mains, see Fig. 7.

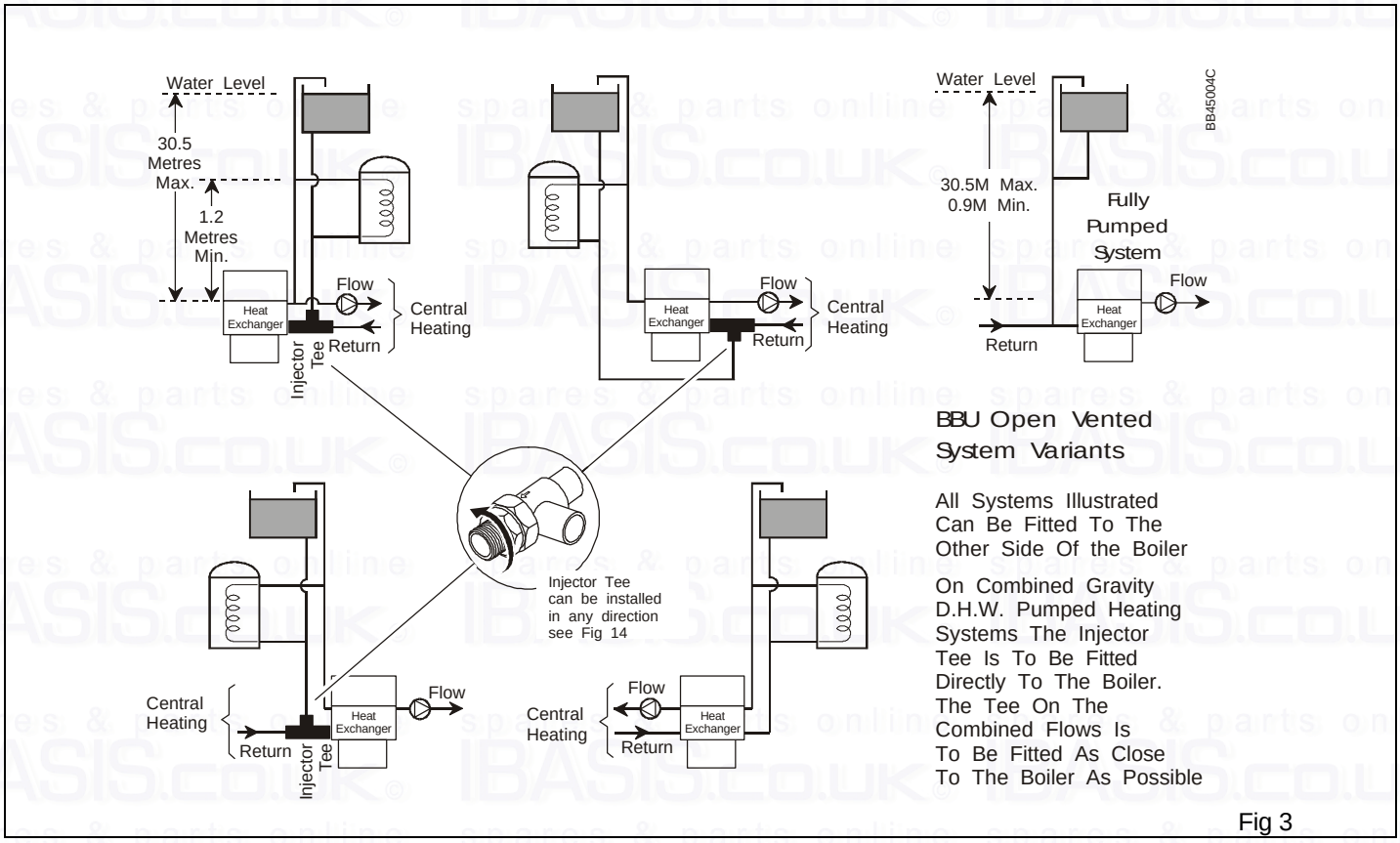

Fig 3

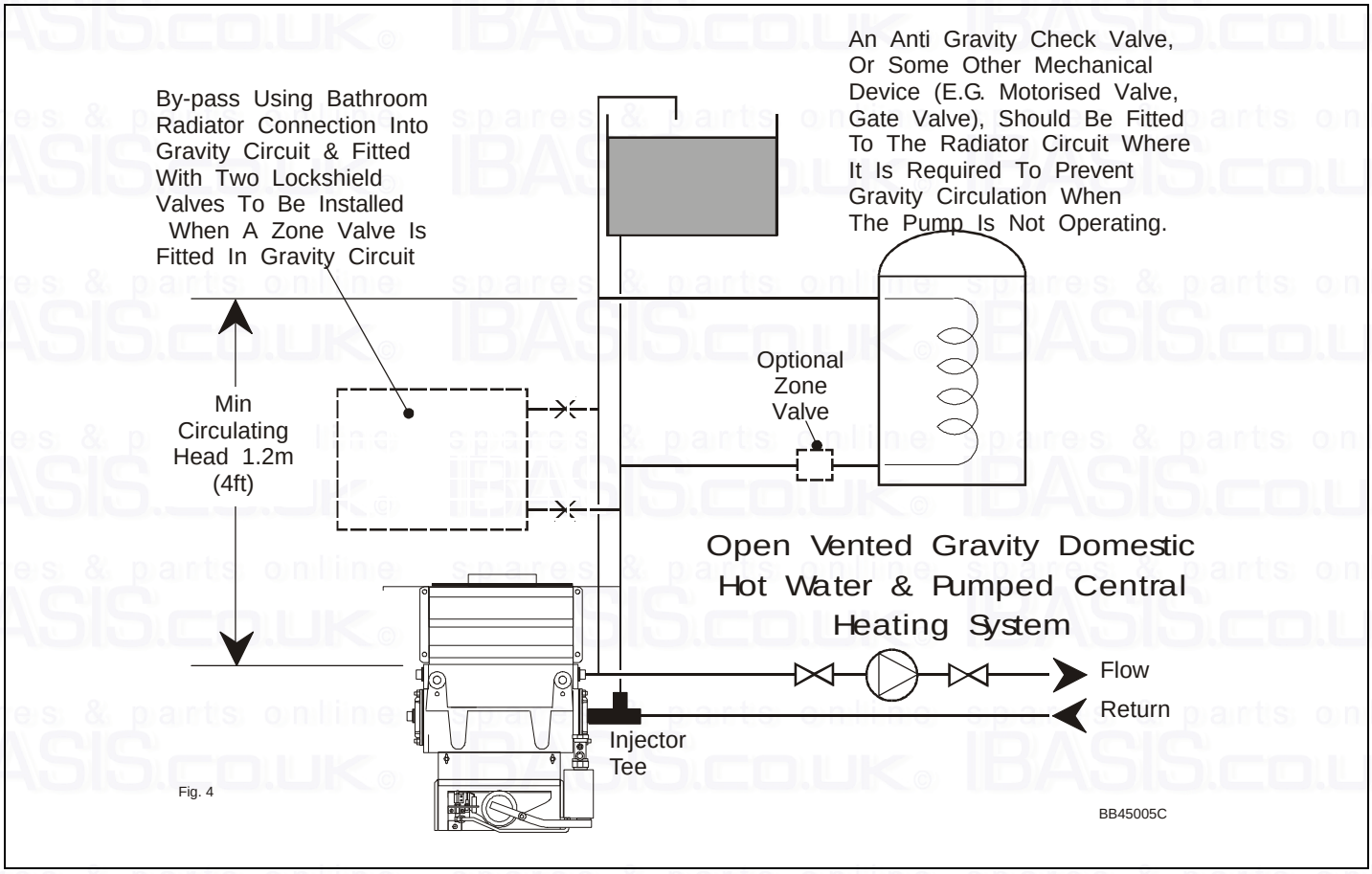
An Anti Gravity Check Valve, Or Some Other Mechanical Device (E.G. Motorised Valve, Gate Valve), Should Be Fitted To The Radiator Circuit Where It Is Required To Prevent Gravity Circulation When The Pump Is Not Operating.
By-pass Using Bathroom Radiator Connection Into Gravity Circuit & Fitted With Two Lockshield Valves To Be Installed When A Zone Valve Is Fitted In Gravity Circuit
Min Circulating Head 1.2m (4ft)
Optional Zone Valve
Open Vented Gravity Domestic Hot Water & Pumped Central Heating System
Flow
Return
Injector Tee
BB45005C

Fig. 4

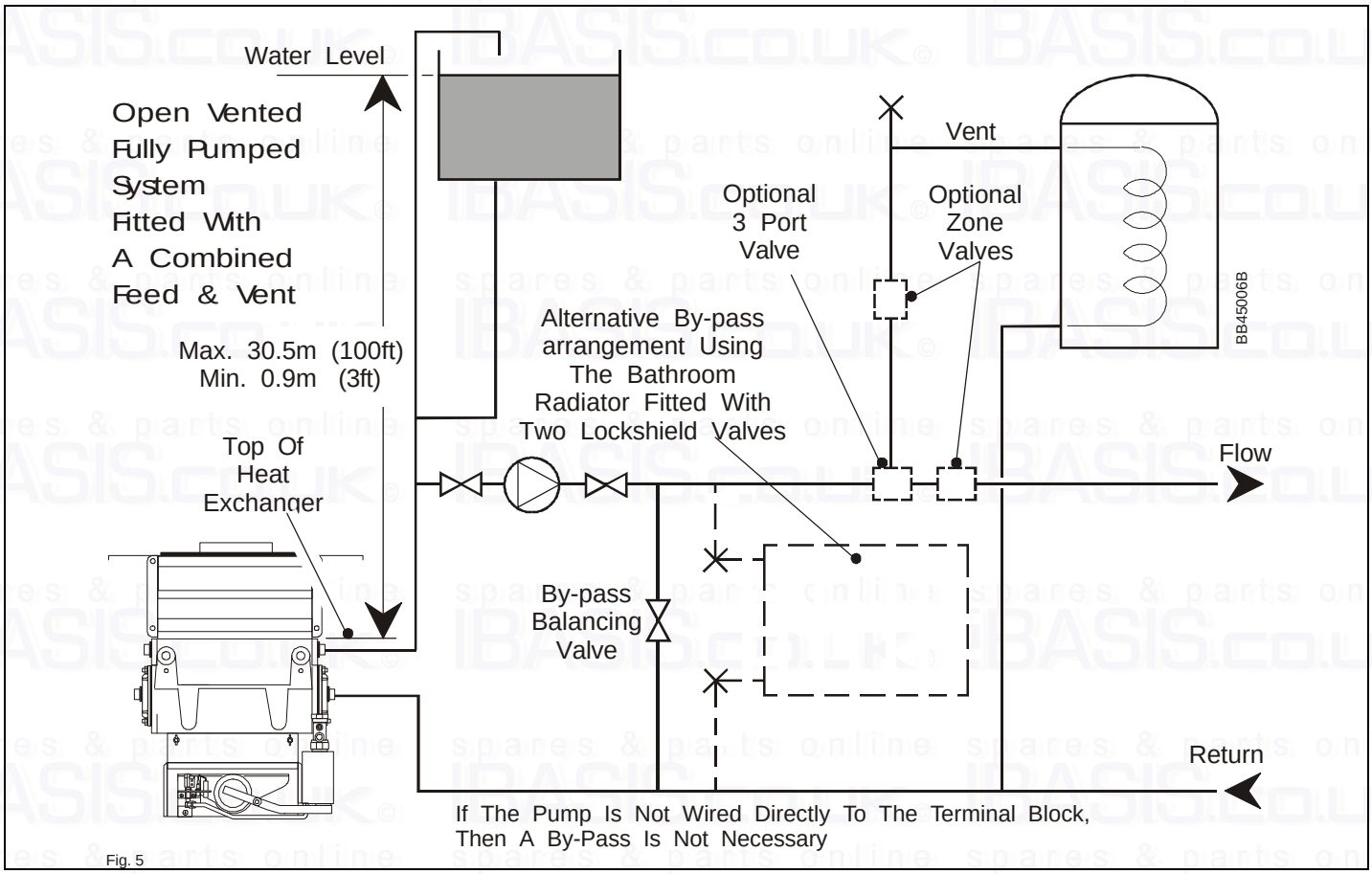
Water Level
Open Vented Fully Pumped System Fitted With A Combined Feed & Vent
Max. 30.5m (100ft)
Min. 0.9m (3ft)
Top Of Heat Exchanger
Vent
Optional 3 Port Valve
Optional Zone Valves
Alternative By-pass arrangement Using The Bathroom Radiator Fitted With Two Lockshield Valves
Flow
By-pass Balancing Valve
Return
If The Pump Is Not Wired Directly To The Terminal Block, Then A By-Pass Is Not Necessary
BB45006B

Fig. 5

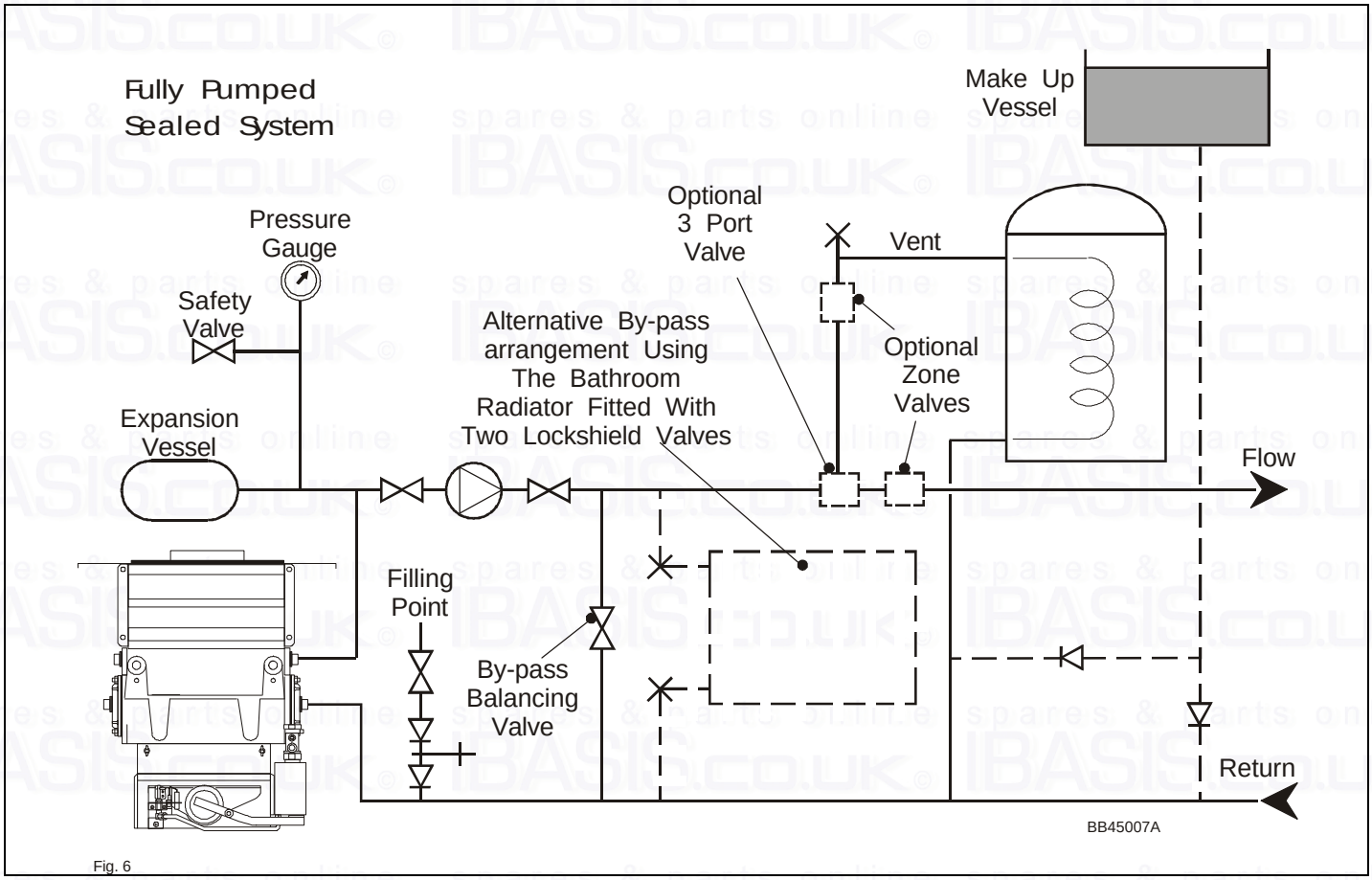

Fig. 6

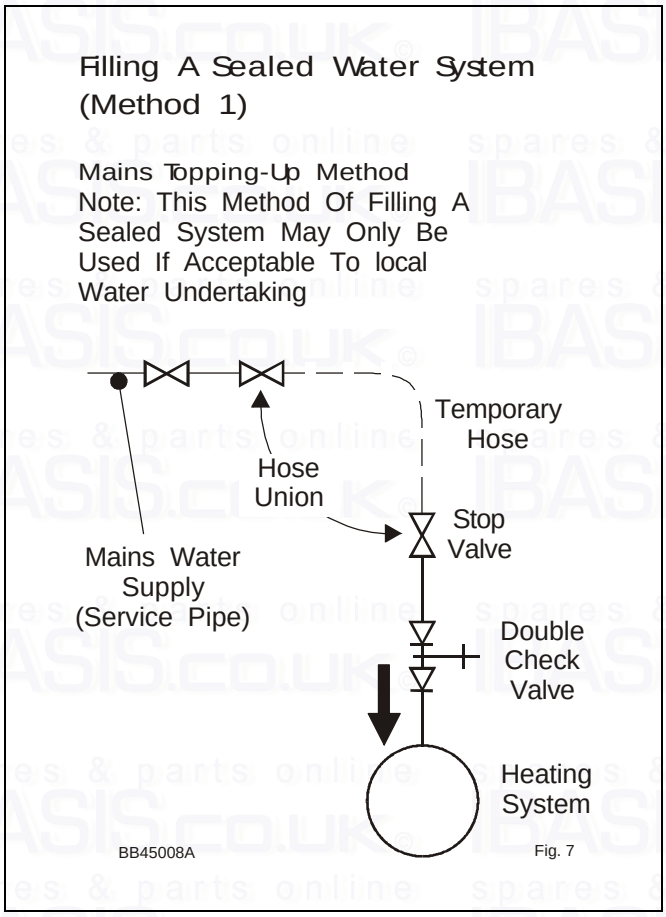

Fig. 7

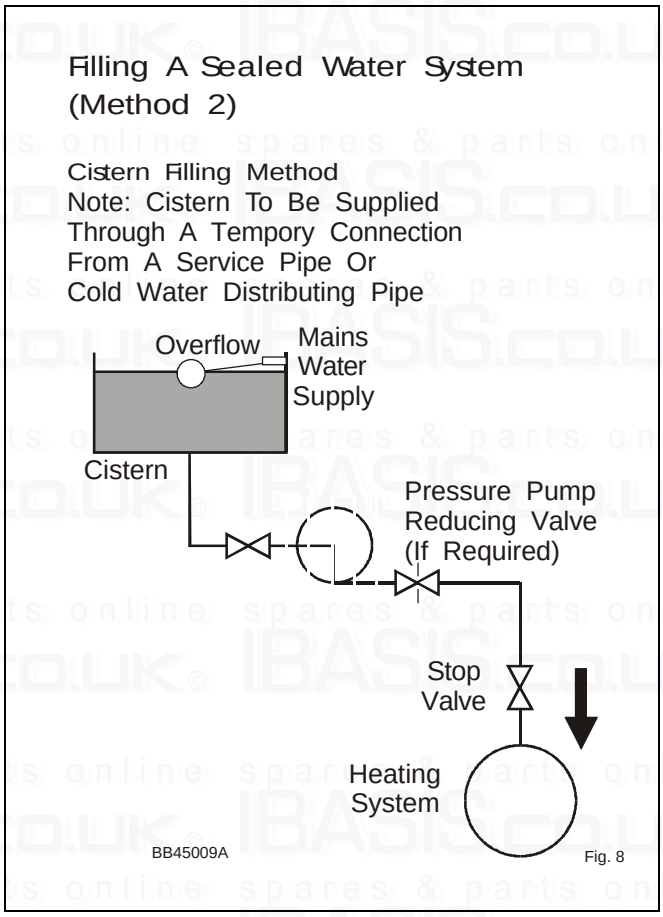

Fig. 8

3.2 Fireplace Opening & Hearth

For all installations the boiler requires a standard builder's brickwork opening (fireplace recess) irrespective of the fire model fitted. The builders opening must measure a minimum of 406mm wide x 560mm high x 362mm deep having a front opening (which may be a fire surround) to the same minimum width and height dimensions. The base of the opening and the top of the hearth must be flat and level.

Allowance for the pipework in the opening should be taken into account before installation.

For the maximum width and height dimensions refer to the Installation & Service Instructions supplied with the fire.

If the surround depth is too deep care must be taken to ensure that the flue connection can be made. See Fig. 1 for relevant dimensions.

The flat surface area and hearth requirements are shown in the Installation & Service Instructions supplied with the fire.

Note: If the fireplace opening is to be newly constructed, it is advisable to use the maximum dimensions shown in the gas fire Installation & service Instructions.

On certain installations it may be convenient to run the gas or electricity supply through from the inside of the fireplace.

Using the dimensions given in Fig. 1., ascertain the best position for the pipework to enter the fireplace and make the appropriate openings.

Gas Fire Name	Min. Dimension
Mainflame/Legend/ Harmony/Pageant	350mm
Allure/Brava/ Brava 2/Charm/Decor	300mm
Illusion/Stratton/Presence/ Illusion 2/Presence 2/Firestar/ Knightsbridge	350mm

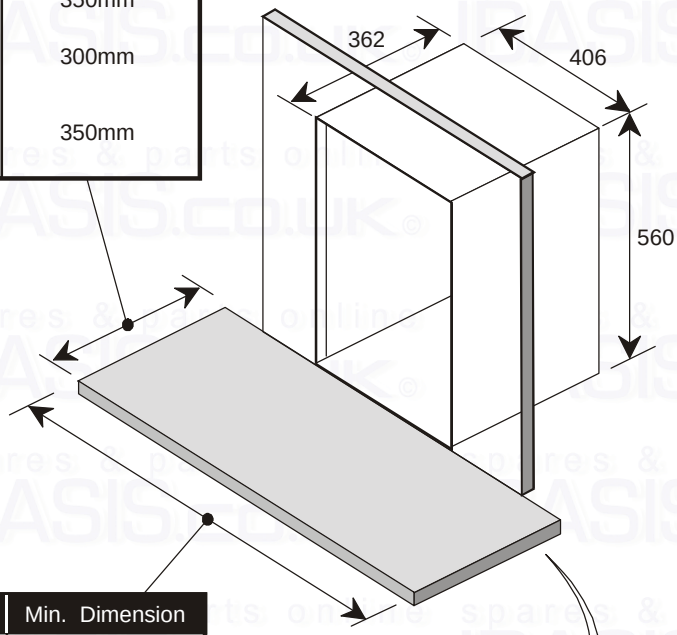

Gas Fire Name	Min. Dimension
Mainflame/Legend/ Harmony/Pageant	700mm
Allure/Brava/ Brava 2/Charm/Decor	700mm
Illusion/Stratton/Presence/ Illusion 2/Presence 2/Firestar/ Knightsbridge	650mm

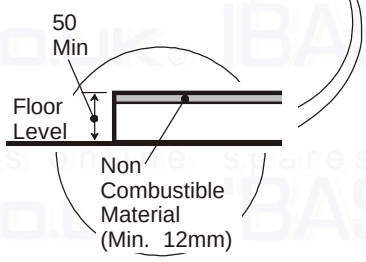

Fig. 9

All Dimensions Quoted In This Diagram Are In mm And Are Of Minimum Dimension

BB45010d

3.3 Chimneys & Flues

1) A flue system (lined throughout its length) must be provided to evacuate the flue products of combustion from the boiler. Reference should be made to the building regulations and BS 5440:1. and the flue system efficiency should be checked in accordance with BS5440.

2) Ideally a flue should rise vertically and any terminal or termination point shall be positioned so that combustion products can disperse safely at all times. Therefore for practical purposes, the flue should have the shortest possible run to external atmosphere, with as near vertical rise as possible, 90° bends should be avoided. The terminal must be at least above roof level and of a type approved by British Gas.

3) There must be at least 2.5m equivalent of vertical flue from the boiler flue socket.

4) Horizontal runs should be avoided, however if a near horizontal flue run is unavoidable, the total vertical height necessary should be calculated in accordance with BS 5440:1.

5) If an existing chimney is used, ensure that it is thoroughly swept before lining or connecting the boiler. The liner must have an internal diameter of 125mm and be acceptable by British Gas.

6) Care should be taken to avoid condensation in the flue.

7) Where a flue liner is necessary (use a non-porous acid resistant type) slide the liner into the chimney to finish at a height of 547mm above the hearth level on which the boiler will stand. Fit an approved outlet terminal to the top of the liner, seal and clamp as shown. A sealing plate should also be fitted and sealed to close off the base of the chimney.

8) In the case of a pre-lined chimney, it must be connected to the socket of the boiler flue hood with a length of liner.

9) Where a chimney lined with a vitreous enamelled flue liner is used, connect and seal a short length of flexible liner into the base of the flue, to finish at the correct height above the hearth level.

10) A precast concrete flue block system may be used provided the cross sectional area is at least 129cm sq. and the precautions outlined in BS 5440:1 are observed.

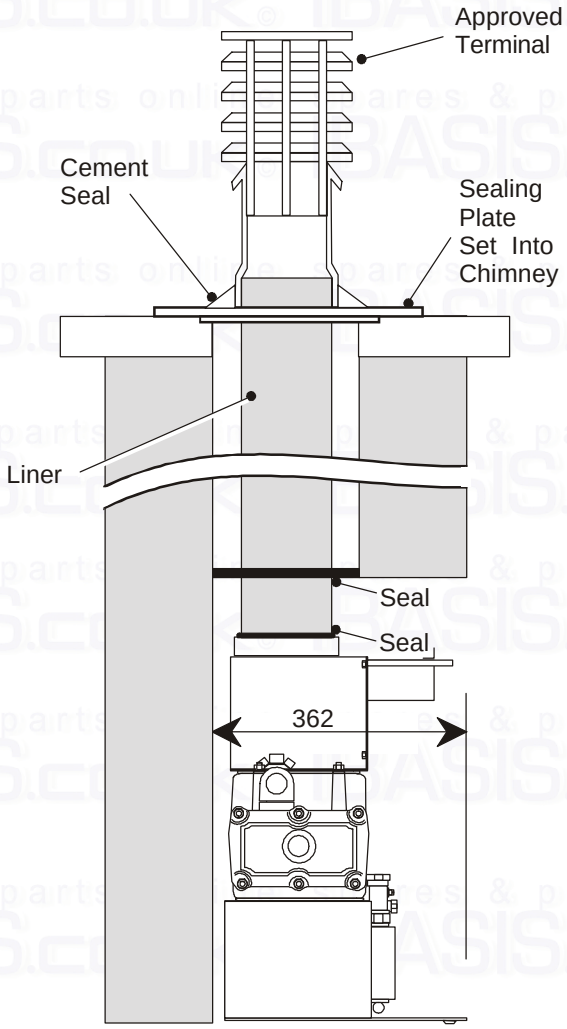

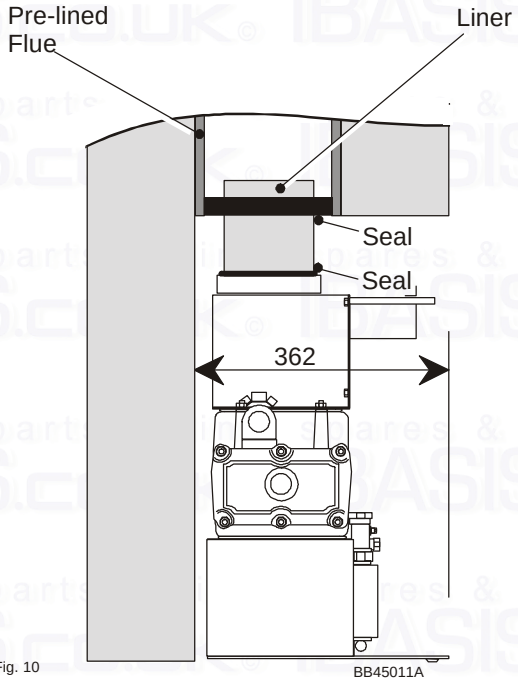

Fig. 10 BB45011A

3. Installation Requirements – Page 12

3.4 Electricity Supply

A 230-240v ~ 50 Hz, single phase electricity supply fused to 3A, must be provided in accordance with the latest edition of the I.E.E. Wiring Regulations and any other local regulations which may apply.

The current rating of the wiring to the boiler must be at least 3A in accordance with BS6500, Table 16, and have a cross-sectional area of at least 0.75mm sq. (24/0.20mm). Heat resistant cable should be used to wire the boiler.

The method of connection to the mains electricity supply must facilitate complete isolation of the boiler together with any external controls fitted in the system preferably by the use of a fused 'three pin' plug and shuttered socket outlet; both complying with the requirements of BS1363. Alternatively, a fused double pole switch, having a 3mm contact separation in both poles and serving only the boiler and external controls may be used.

3.5 Gas Supply

The gas meter and supply pipe should be checked to ensure that they are adequate for the boiler and any other appliance already fitted; your Local Gas Region will assist in this matter.

The recommendations of BS 6891 & BS 6400 must be observed. Any part of the gas supply pipe running within the chimney recess, should be suitably protected, (e.g. coated or wrapped with PVC tape).

3.6 Air Supply & Ventilation

The ventilation of the room containing the boiler shall include air for combustion and draught diverter dilution.
A permanent air vent must be fitted either directly to the outside of the building or into a room or space containing a permanent air vent of the same effective area. The air vent must not enter the room through the builders opening.

The minimum effective area of the air vent required is as follows:-

45 Back Boiler and Gas Fire: 73cm²
55 Back Boiler and Gas Fire: 89cm²

Any air grille and/or duct should be so sited and of a type not to become easily blocked or flooded and should offer low resistance to air flow.

If an extraction fan is fitted in any position which could affect the air supply to the boiler, then a spillage test with the fan running as detailed in BS5440:1 must be carried out.

4. Installation – Page 12

4.1 Pre-Installation Checks

Before installing the boiler check that:-

1) All register or restrictor plates and dampers from the flue system have been removed.
2) That the chimney has been swept.
3) That all rubble has been removed from the fireplace opening.
4) That if one is to be used the fire surround and hearth have been fitted and sealed to the wall.
5) That the base of the opening is horizontal and level.
6) That all necessary openings have been made in the fireplace for pipework and gas or electricity supplies.
7) That the flue has been lined (if required).

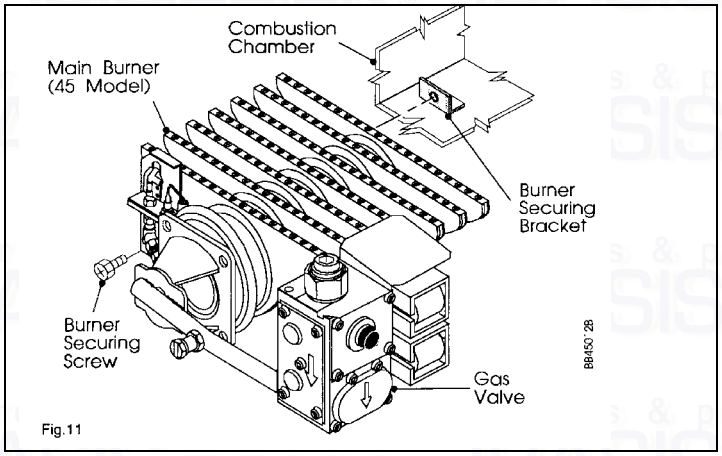

Fig.11

4.2 Install the Boiler

Important
If the gas supply is to come in on the left hand side, read paragraph 7 now.

1) Make the required fittings to the boiler.

2) Undo the two wing nuts and remove the combustion chamber front cover.

3) Remove the burner/gas valve assembly - 1 screw and put safely to one side.

4) Locate the boiler in the fireplace opening ensuring that the 'V' in the front plate is about the centreline of the opening and horizontally aligned with the front opening.

5) Offer the spigot hood up to the flue hood to ensure it will fit inside the front opening.

6) Mark the position of the fixing holes, move the boiler clear of the marked points then drill and plug the holes.

7) Position the boiler back over the holes and secure to the floor with the 2 No. 8 x 1" Pozi Woodscrews provided.

8) Run the gas supply preferably from the right hand side of the opening. If the gas supply comes in from the left it must cross to the right, behind the boiler if possible. If crossing the front of the boiler, ensure that it will not obstruct removal of the burner tray (when fitted).The gas supply pipe in the opening should be protected by wrapping in PVC tape.

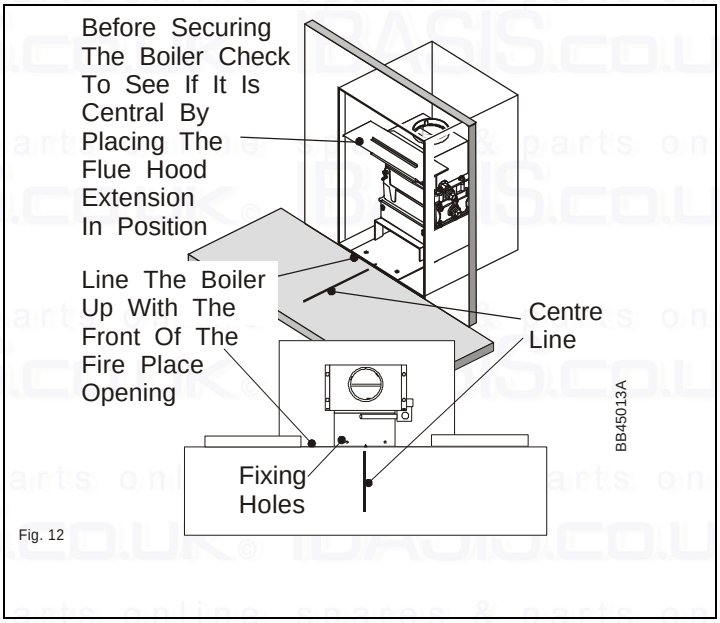

Fig. 12

Note: The flue hood can be removed (4 nuts) to improve access when connecting the system pipework. Ensure the rope seal is correctly aligned on re-assembly.

Remember ! The burner/gas valve assembly will be fitted later, ensure the system pipework will not pass through this area.

9) Connect the system pipework to the boiler. A drain off tap should be installed close to the boiler if it is in a low point of the system.

Note: On combined Gravity DHW Pumped Heating Systems the injector tee must be fitted directly to the boiler. The tee on the combined flows is to be fitted as close to the boiler as possible.

10) Effectively seal all openings around the system pipework

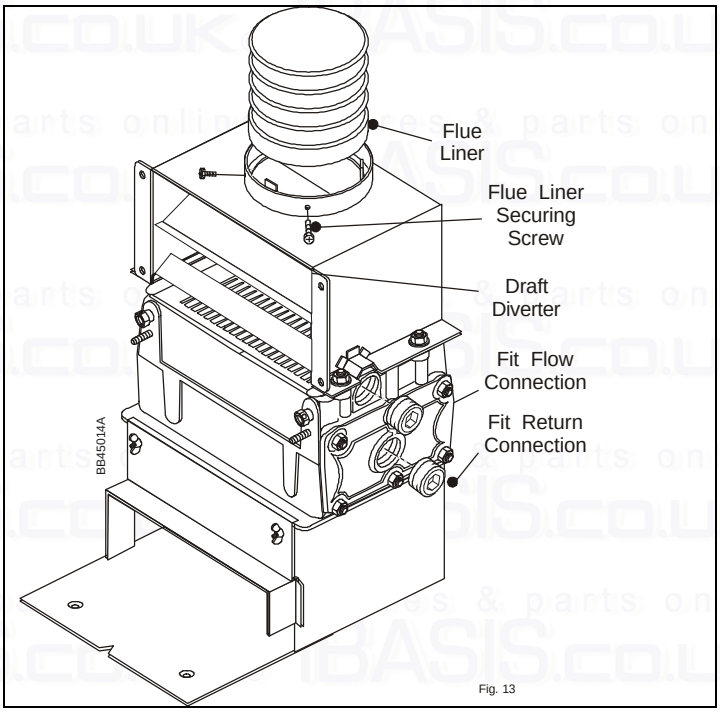

Fig. 13

11) Connect the flue liner to the socket on the flue hood using the 2 screws fitted to the socket. Seal the joint with a suitable material.

12) Remove the top two screws from the draft diverter, locate the flue hood extension and secure using the screws removed.

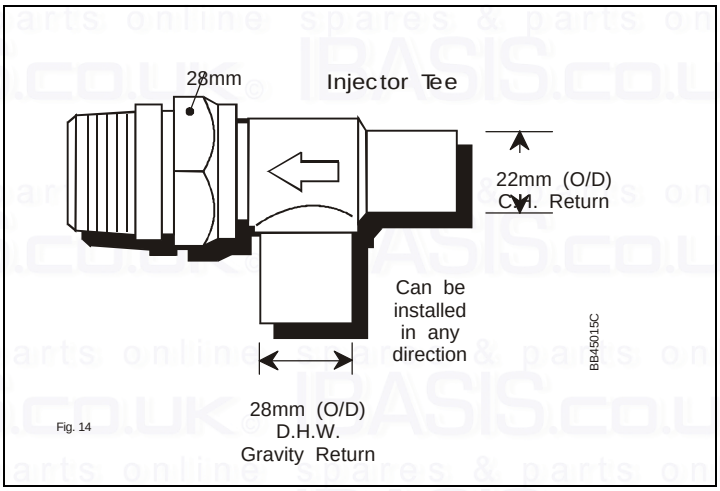

Fig. 14

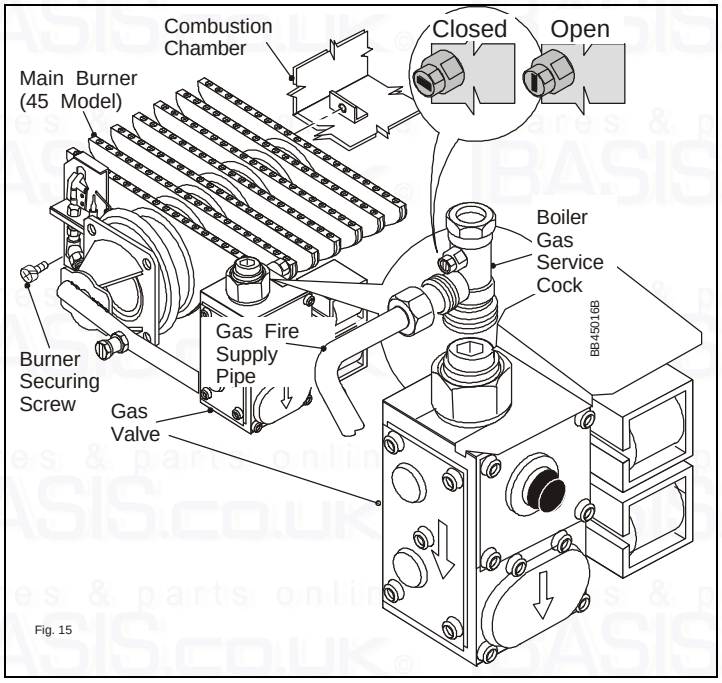

Fig. 15

13) Loosely fit the gas service cock to the gas valve.

14) Re-fit the burner/gas valve assembly and secure with the screw previously removed.

15) Re-fit the combustion chamber front cover and secure using the wing nuts previously removed.

16) Connect the mains gas supply to the gas service cock.

17) Connect the gas fire supply pipe to the gas valve. *This is supplied with the fire.*

18) Fully tighten all gas joints.

Refer to Fig. 16.

19) Attach the gas fire mounting bracket to the boiler using the wing nuts supplied on the boiler. *The bracket is supplied with the fire.*

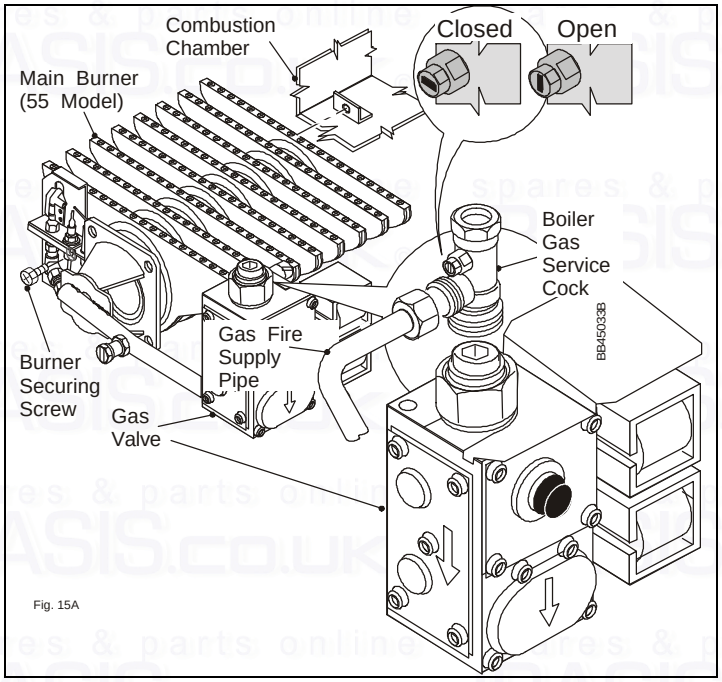

Fig. 15A

20) Insert the gas fire isolation tap through the hexagonal opening in the gas fire mounting bracket and secure using the locknut. Connect the gas fire supply pipe to the isolation tap. *The gas fire isolation tap complete with locknut is supplied with the boiler.*

Important

Ensure the isolation points on both the boiler gas servicecock and the gas fire isolation tap are in the OFF position.

21) Secure the electronic control box to the gas fire mounting bracket using the screws provided.

22) Secure the user controls to the gas fire mounting bracket using the screws provided.

23) Push the coiled overheat stat sensor into the right hand socket. Secure using the plastic screw. If the boiler is to be used on a **Gravity DHW** system the overheat sensor must be repositioned as shown.

24) Connect the electrics as shown in section 4.3.

.

Important:

Do not switch on the electric supply

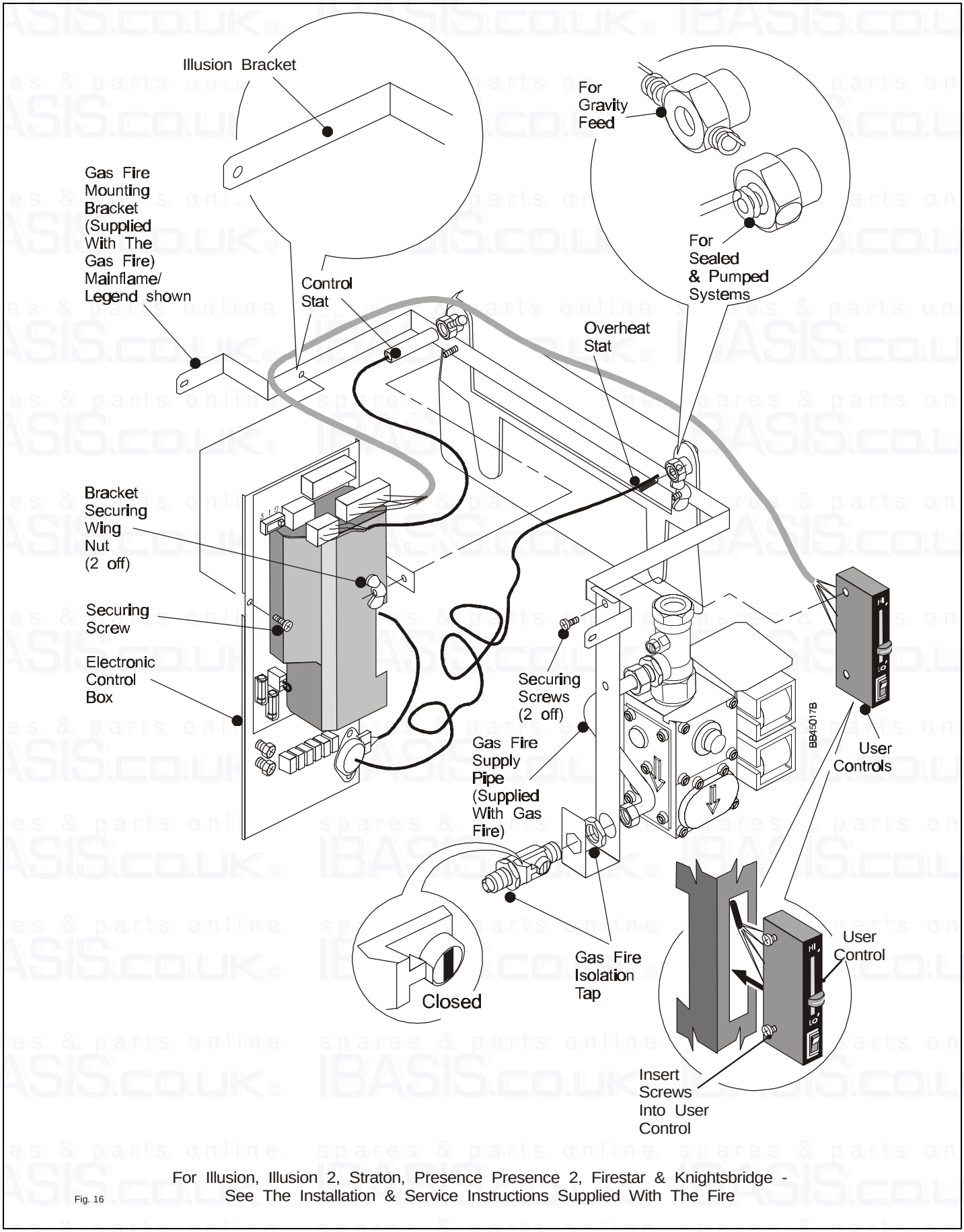

For Illusion, Illusion 2, Straton, Presence Presence 2, Firestar & Knightsbridge - See The Installation & Service Instructions Supplied With The Fire

Fig. 16

4.3 Electrical Connections

The boiler and all external control circuit wiring must be supplied from the same single isolating switch or plug and socket, and should be fused at 3A.

Care must be taken to ensure that all wiring to the boiler will not contact any sharp edges or hot surfaces.

We recommend that the supply be routed within the opening and clipped to the side of the recess.

Use Fig. 17. as a reference for connecting the following components:-

1) Connect the user controls plug onto its socket on the electronic control box and secure the harness using the cable clips.

2) Connect the electrode lead plug onto its socket on the electronic control box.

3) Connect the gas valve plug onto its socket on the electronic control box and secure the harness using the cable clips.

4) Connect the control stat plug onto its socket on the electronic control box.

5) Route a 4 core cable under the cable clamp and connect to the 6 way terminal block as follows:-

Systems Using Pump Overrun Facility

Re-position link LK1 on the electronic control box so the link wires are to the top of the board **(Gravity Link Broken).**

Permanent live to terminal marked MAINS 'L'.
Neutral to terminal marked MAINS 'N'.
Earth to terminal marked '⏚'.
Switched live from external controls to terminal marked MAINS 'SwL'.

Following the pump manufacturers instructions, connect the pump supply wires to the terminals marked 'Pump' L, N &' ⏚ 'on the terminal block and secure using the cable clamp.

Note: Ensure that the earth connector is longer than the L, N & SwL from the point of anchorage, so that the current carrying conductors become taut before the earth conductor.

Systems NOT Using Pump Overrun Facility

Switched live from external controls to terminal marked MAINS 'SwL'.
Neutral to terminal marked MAINS 'N'.
Earth to terminal marked '⏚'.

The link LK1 should be left with the link wires to the bottom of the board **(Gravity Link Connected).**

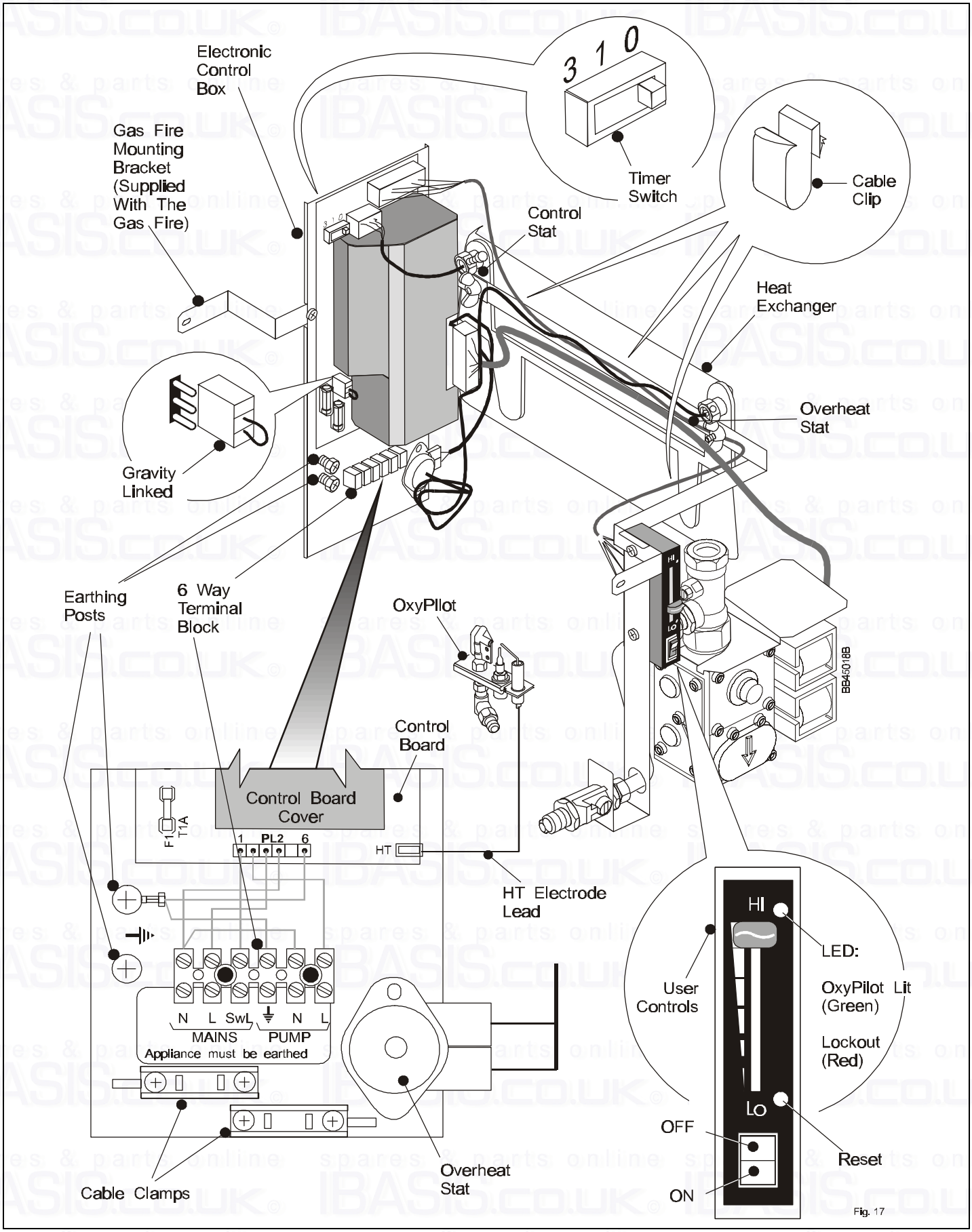
Electronic Control Box
Gas Fire Mounting Bracket (Supplied With The Gas Fire)
3 1 0
Timer Switch
Cable Clip
Control Stat
Heat Exchanger
Overheat Stat
Gravity Linked
Earthing Posts
6 Way Terminal Block
OxyPilot
Control Board
Control Board Cover
F1 T1A
1 PL2 6
HT
HT Electrode Lead
N L SwL N L
MAINS PUMP
Appliance must be earthed
Cable Clamps
Overheat Stat
HI
LO
User Controls
LED:
OxyPilot Lit (Green)
Lockout (Red)
OFF
ON
Reset
BB45018B

Fig. 17

5. Commissioning – Page 18

5.1 Commission the Boiler

Important
The commissioning and boiler adjustment must only be carried out by a suitably qualified personnel. Potterton Myson offer this service on a chargeable basis.

Important
When checking for gas soundness open all windows and doors in the room. Extinguish all naked lights, cigarettes, pipes, etc.

Open Vented Systems - Remove the pump and flush the system thoroughly with cold water. Re-fit the pump. Fill and vent the system then check for leaks.

Sealed Systems - Note: The system can be filled using a sealed system filler pump with a break tank or by any other method approved by the Local Water Authority. Refer to Section 3.1, 'The System' on Page 6 of these instructions. Remove the pump and flush the system thoroughly with cold water. Re-fit the pump. Fill and vent the system until the pressure gauge registers 1.5 bar (21.5 lbf/in²) and check for leaks. Raise the pressure until the safety valve lifts, this should occur within ± 0.3 bar of the preset lift pressure of 3 bar. Release water to attain the correct cold fill pressure.

All Systems

1) The whole of the gas installation must be checked for soundness and purged in accordance with BS 6891.
2) Set the timer switch on the electronic control box to position '0'
3) Set the boiler switch on the user controls to 'Off'
4) Turn the boiler gas service cock to the 'On' position and then turn On the main gas supply.
5) Ensure the system is full of water and that the pump and radiator isolating valves are open.
6) Switch On the main electricity supply at the isolating switch or plug and socket.
7) Ensure that the time control, if fitted, is in an ON condition and that the room and cylinder. thermostat, where fitted are set to high temperatures
8) Set the slider control on the user controls to 'Hi' and the boiler switch to 'On'.

First time lighting: The pilot will attempt to light, if the pilot does not light within 60 seconds (due to air in the system) the boiler controls will go to 'Lockout' and the LED on the user controls will go Red. To re-start the lighting sequence press the reset button on the user controls. There will be a short delay before the lighting sequence starts.

When the pilot flame has established and the burner lights the LED on the user controls will go Green.

9) With the main burner running, check for gas soundness around the boiler using leak detection fluid.
10) Allow the system to reach maximum working temperature and examine for leaks. Set the boiler switch to 'Off' and drain the system whilst still hot.

Note: Should the boiler fail to operate correctly refer to the Fault Finding Guide on Page 24, and the boiler wiring diagram on Page 25 for further information.

11) Re-fill and vent the system making a final check for leaks.

On sealed systems adjust to the correct cold fill pressure. Set the pressure gauge pointer to the system design pressure.
If a by-pass circuit is fitted the by-pass valve should be adjusted with the boiler operating under minimum load conditions to maintain sufficient water flow through the boiler to ensure that the overheat thermostat does not operate under normal conditions.

Preliminary electrical system checks must be carried out. They are:- Earth Continuity, Short Circuit, Polarity & Resistance to Earth.

5.2 Final Adjustments

1) Remove the screw and fit a pressure gauge to the burner pressure test point on the burner feed pipe.
2) Turn the boiler on and allow to run for 10 minutes.
3) Check that the burner pressure is in accordance with the information on the boiler data badge.
4) If burner pressure adjustment is required, remove the cap on the side of the gas valve and turn the screw underneath - clockwise to increase pressure.
5) Check at the Gas Meter that the heat input is correct.
6) Shut down the boiler, remove the pressure gauge, re-fit the screw and check for gas soundness. Re-fit the cap (snaps on) onto the side of the gas valve.
7) Set the timer switch to suit system reqirements. See 5.3, Timer Switch.

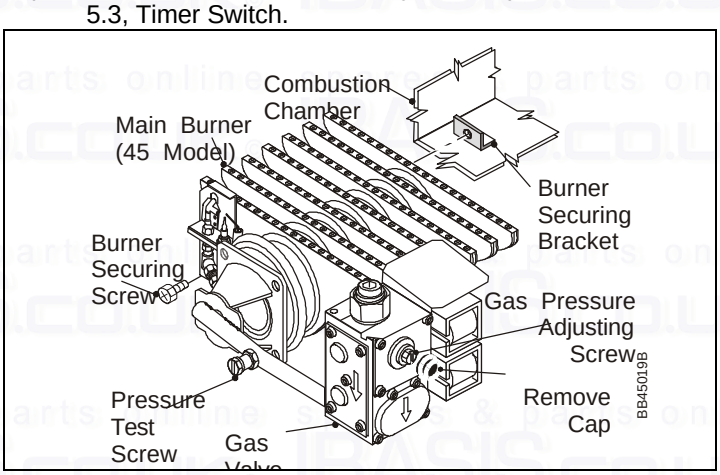

5.3 Final Checks

OxyPilot Burner

The pilot is pre-set and no adjustment is required. When lit the pilot flame envelope should just cover the electrode tip and spark earthing post.

If the pilot flame is not as described, replace the OxyPilot as covered in Section 6 - Servicing & Replacement of Parts.

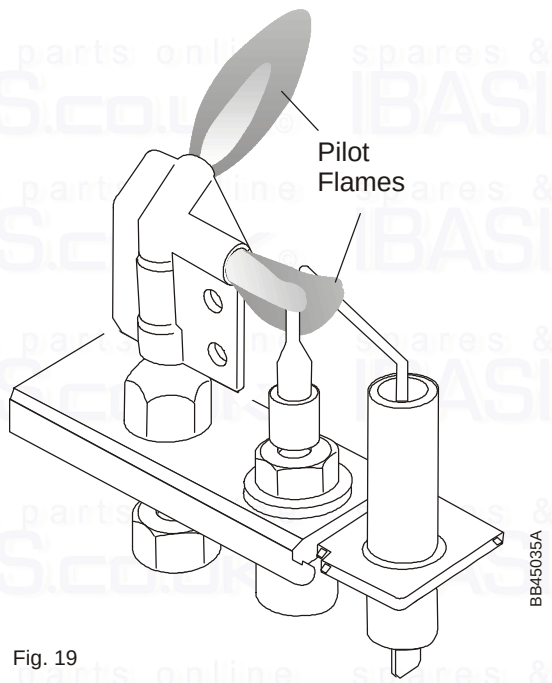

Fig. 19

Control Thermostat

At its minimum and maximum settings, the thermostat should control the water flow temperature at approximately 57°C - 82°C.

Set the boiler switch to 'Off' and check that the main burner shuts down.

Overheat Thermostat

The overheat thermostat is pre-set and no adjustment is possible. It will require manual re-setting if an overheat condition occurs (the LED will go Red).

The re-set button is located at the bottom right of the user control box.

Timer Switch

This switch is internally connected to the gas control valve circuit and a timed pump over-run circuit.

At switch position '3' the main burner will remain off for approximately 3 minutes following operation of the control thermostat thereby preventing rapid cycling. Also, on fully pumped systems where the pump is wired to the boiler control board, the pump will operate for approximately 3 minutes following shut down of any system controls.

Switch position '1' provides timings of approximately 1 minute.

Switch position '0' eliminates timing delay and should only be used during commissioning.

It is suggested that switch position '3' is used wherever possible. However, if the time delay adversely affects hot water recovery times on gravity systems, position '1' should be used.

Other Boiler Controls

No further setting or checking is necessary as all boiler mounted controls are designed so that if a fault should occur they will fail safe.

External Controls

Check that any other external controls connected in the system, such as clocks or thermostats, control the boiler as required.

5.4 Re-check Flue Efficiency

Before installing the fire front perform the following:-

Re-check the flue system efficiency in accordance with BS 5440 whilst the boiler is operating.

5.5 Install the Fire Front

Install the gas fire and check for spillage as detailed in the Installation & Service Instructions supplied with the gas fire.

5.6 Instruct the User

On completion of the installation, the installer should demonstrate the operation of the boiler and its associated controls. Also hand over all the instructions.

6. Servicing & Replacement of Parts – page 20

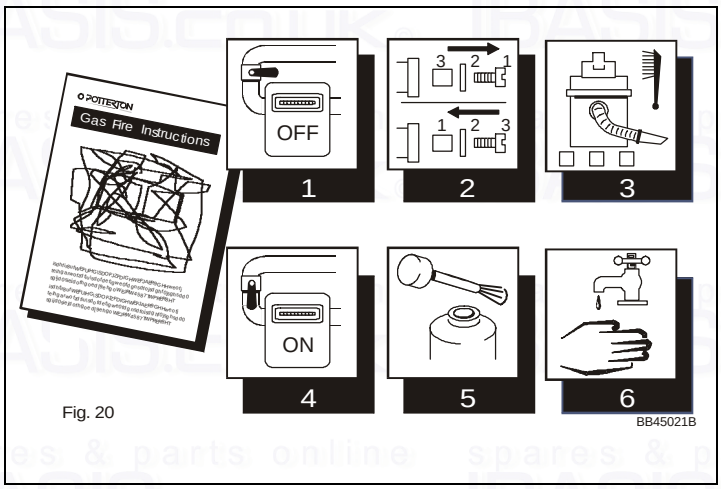

Fig. 20

WARNING:
Before commencing work turn the fire off, turn the boiler switch to 'OFF" and Isolate the electricity supply to the boiler. Allow the fire and boiler to cool.

IMPORTANT:
Always test for gas soundness after completing any replacement of gas carrying components and carry out functional checks of controls.

In the interests of hygiene, please wash your hands after working on this appliance.
Re-assemble in reverse order unless otherwise stated.
If cleaning the heat exchanger at any time, proceed as follows:-
Perform sections 6.1 and 6.2. Remove the spigot hood and down draught diverter - 2 screws The heat exchanger. can now be brushed clean and any deposits falling through can be swept out from the base of the boiler.

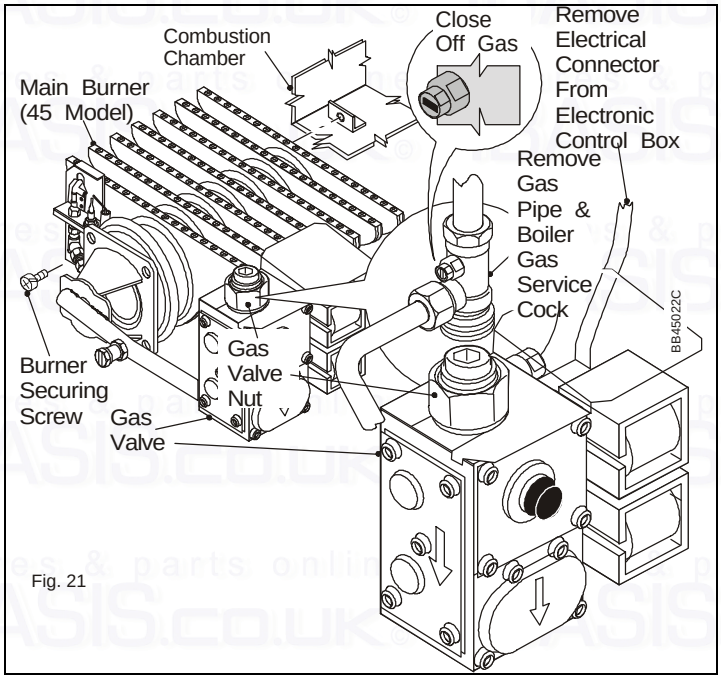

Fig. 21

6.1 Preparation

1) Isolate the electrical supply to the boiler.
2) Isolate and remove the gas fire as shown in the gas fire Installation & Service Instructions.

6.2 Burner/Gas Valve Assembly

1) Turn the gas supply Off at the boiler gas service cock isolation point.
2) Disconnect the gas valve electrical connector from the electronic control box and release the lead from the clips.
3) Release the nut securing the gas service cock to the gas valve.
4) Remove the two wing nuts and remove the combustion chamber front.
5) Remove the screw securing the burner/gas valve assembly to the base of the boiler.
6) Carefully withdraw the complete assembly away from the boiler
7) Re-assemble in reverse order. Ensure that the flange on the burner end cap (See Fig. 24) locates under the top hat bracket at the rear of the combustion chamber.

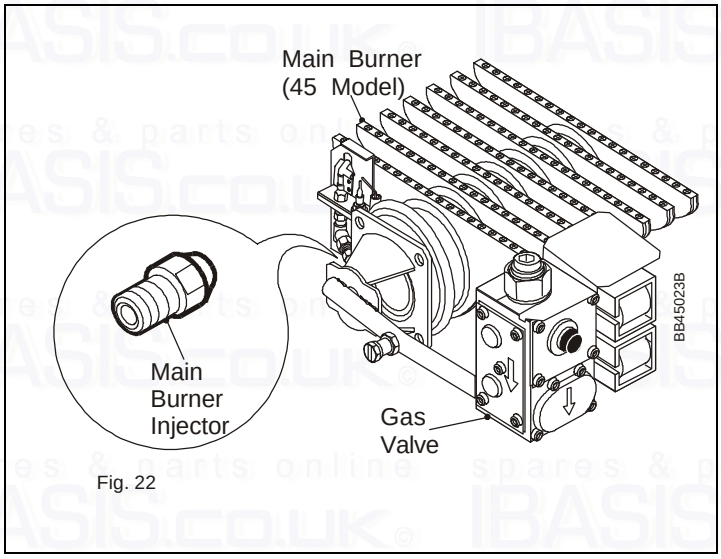

Fig. 22

6.3 Main Burner Injector

1) Perform section 6.2
2) Unscrew the injector.
3) Re-assemble in reverse order.

Note: On re-assembly use a suitable sealing compound on the threads. Take care not to block the injector holes.

6.4 Lint Guard

1) Pull the guard backwards horizontally.
2) Clean the gauze using a brush or vacuum cleaner.
3) Re-assemble in reverse order.

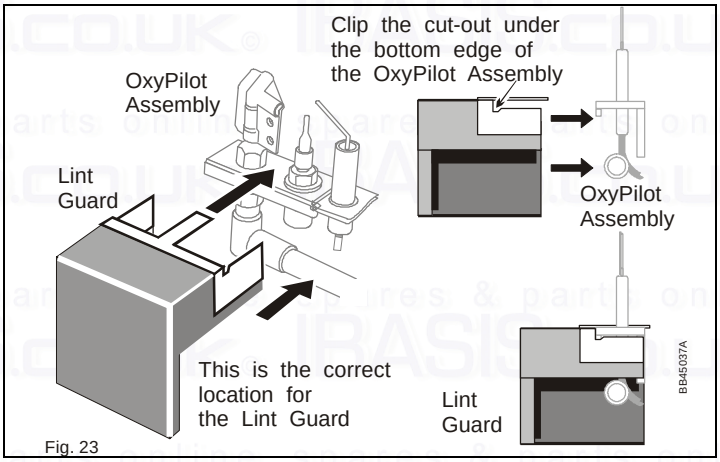

Fig. 23

6.5 OxyPilot/Electrode Assembly

1) Perform section 6.2
2) Firmly grip the OxyPilot body and disconnect the nut securing the pilot pipe to the elbow.
3) Disconnect the electrode lead from the electrode.
4) Remove the 2 screws securing the assembly to the burner. Note how the pilot shield fits.
5) On re-assembly check the electrode gap, it should be 3 to 6mm.
   If necessary, adjustment can be made by gripping the base of the tip with one pair of pliers whilst gently bending the end of the tip with another pair. Take care not to crack the ceramic liner.
6) Re-assemble in reverse order.

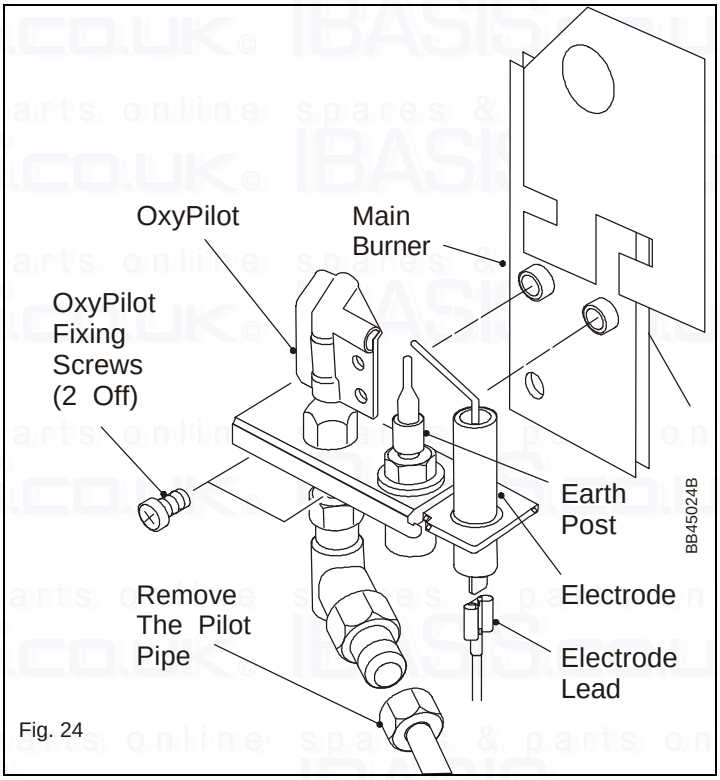

Fig. 24

6.6 Burner

Servicing the Burner

1) Perform section 6.2.
2) Unscrew the M5 nut securing the burner cap and remove the cap. Withdraw the internal baffle and gauze from inside the burner. Thoroughly clean the gauze using a brush or vacuum cleaner. Clean all deposits from the surface of the burner flame strip with a soft brush or vacuum cleaner and ensure that there is no fluff in the entry of the burner venturi.
3) Re-assemble in reverse order.

Fitting a new burner

1) Perform section 6.2.
2) Perform section 6.3.
3) Perform sections 6.4 and 6.5.
4) Remove the 4 bolts securing the burner feed pipe to the base of the gas valve.
5) Re-assemble in reverse order.

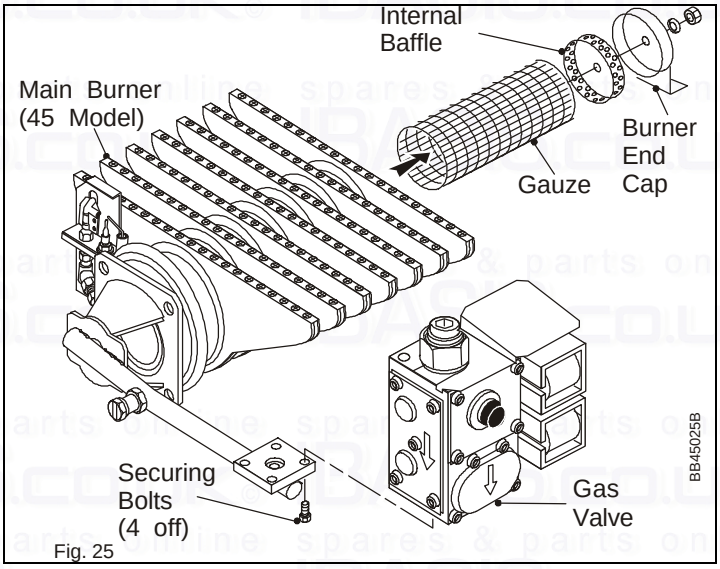

Fig. 25

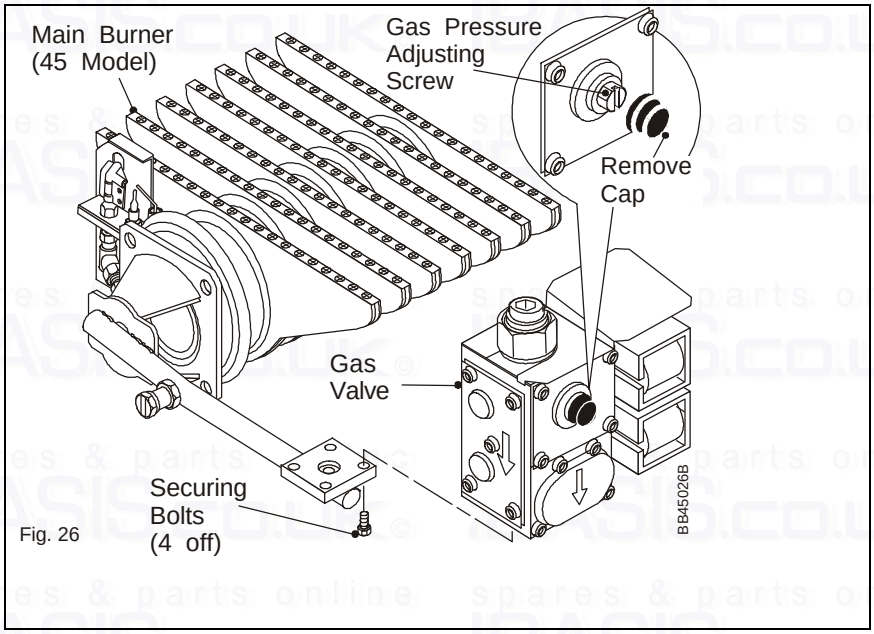

Fig. 26

6.7 Gas Valve

1) Perform section 6.2.
2) Remove the screw securing the gas valve electrical plug to the valve. Pull off the plug and remove the gasket.
3) Remove the 4 bolts securing the burner feed pipe to the base of the gas valve.
4) Re-assemble in reverse order. Fit the gasket into the gas valve socket before connecting the plug.
5) Light the boiler and allow to run for 10 minutes, and if necessary adjust the burner setting pressure to give the heat input required.

   The adjusting screw will be accessible after removal of the plastic cap on the side of the valve. Snap the cap back into place after adjusting.

6) Re-assemble in reverse order.

6.8 Overheat Thermostat (See Fig. 27.)

1) Loosen the plastic screw and withdraw the overheat sensor.
2) Disconnect the 2 electrical connectors at the thermostat Note which way they fit.
3) Remove the locknut securing the thermostat to the control box.
4) Re-assemble in reverse order.

6.9 Control Thermostat (See Fig. 27.)

1) Loosen the plastic screw and withdraw the control sensor.
2) Disconnect the electrical connector at the control box.
3) Re-assemble in reverse order.

6.10 Electronic Control Box (See Fig. 27.)

1) Disconnect all electrical connectors from the control box.
2) Detach the control box from the gas fire mounting bracket - 1 screw & 1 wingnut.
3) Set the timer switch on the new box to the same position as the old one.

Note: Fig. 17 on Page 17 shows where all the electrical connectors connect onto the box.

4) Re-assemble in reverse order.

6.11 User Control Box

See Fig. 27.

Important
This is a non-serviceable part and must be replaced complete.

1) Disconnect the electrical connector at the control box.
2) Detach the user control box to the gas fire mounting bracket - 2 screws.
3) Re-assemble in reverse order.

6.12 Heat Exchanger (See Fig. 28.)

Servicing the Heat Exchanger.

1) Perform sections 6.1 & 6.2.
2) Remove the 2 screws securing the flue hood extension and down draft diverter to the flue hood and remove them both.
3) Using a short steel blade or 6" ruler clean between the fins of the heat exchanger, removing any heavy deposits.
4) Clean out the base of the fins and the combustion chamber with a vacuum cleaner or brush.
5) Once the combustion chamber has been completely cleaned then re-assembly can begin.
6) Re-assemble in reverse order.

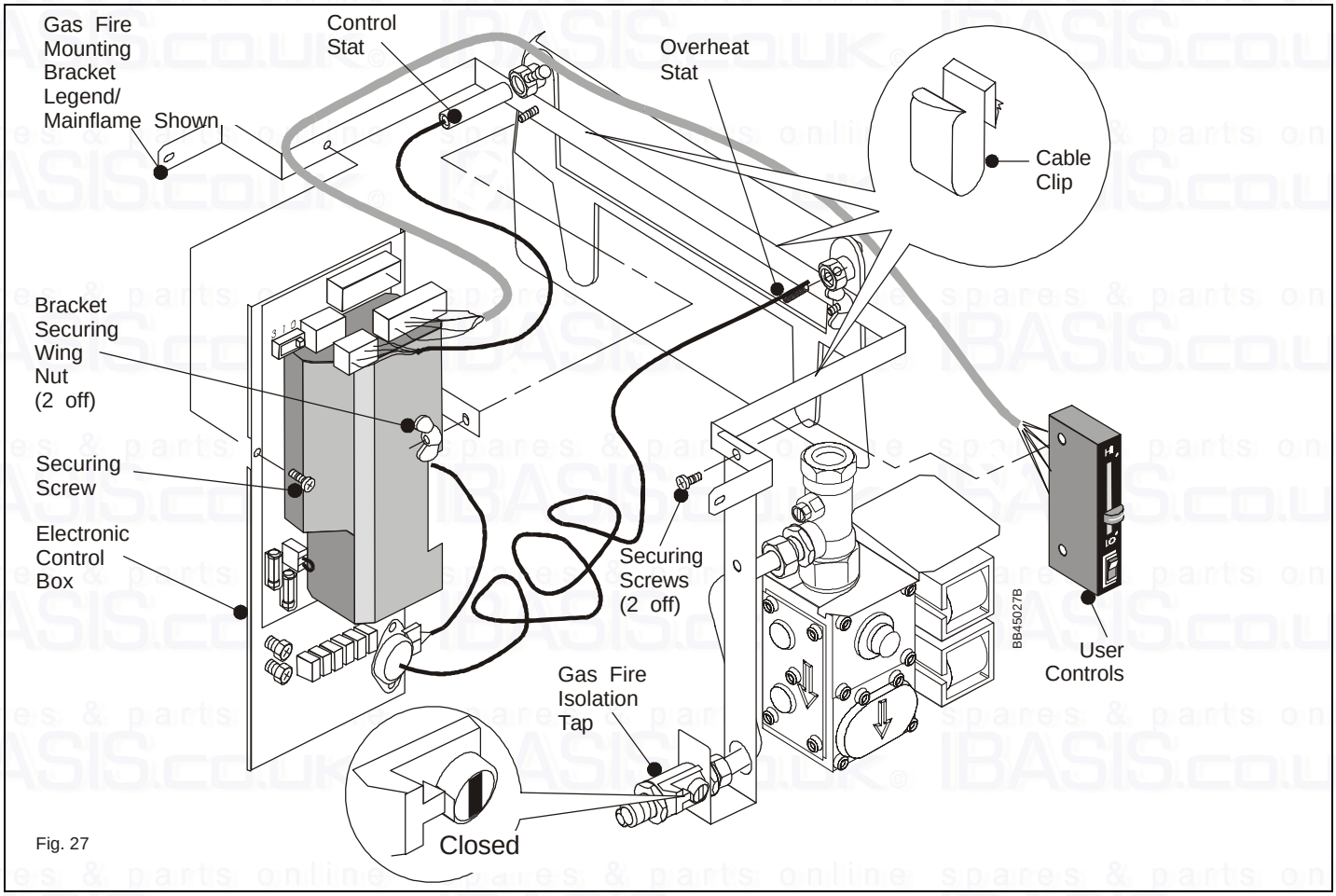

Fig. 27

Fitting a new Heat Exchanger.

1) Perform sections 6.1 & 6.2.

2) Drain the water from the system.

3) Disconnect the flow and return connections on the boiler.

4) Remove the 2 screws securing the flue liner and move it away from the top of the flue hood.

5) Remove the 2 screws securing the boiler to the base of the opening.

6) Carefully pull the complete boiler out of the fireplace.

7) Remove the top 4 nuts and lift the flue hood off.

8) Remove the bottom 4 nuts and lift the heat exchanger off the combustion chamber.

9) Check the condition of the rope seals and fit new ones if required.

10) On re-assembly it will be necessary to re-commission the boiler. See Section 5, Page 18.

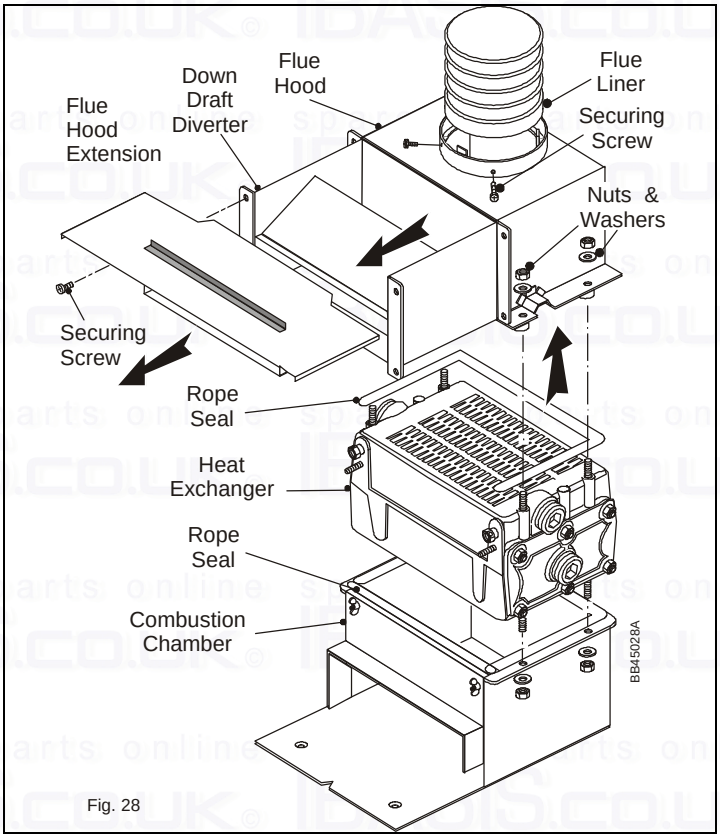

Fig. 28

7. Fault Finding – Page 24

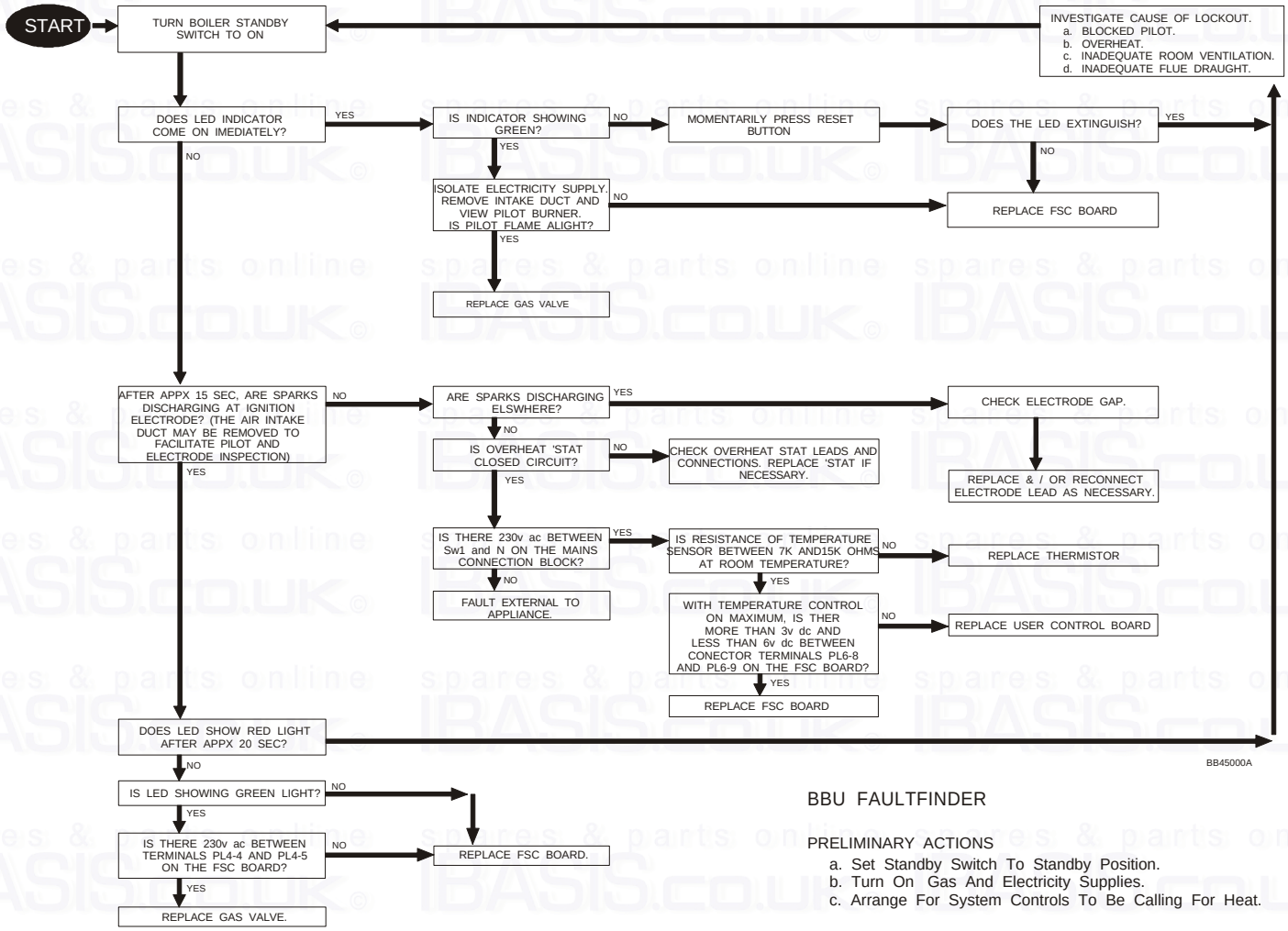

BBU FAULTFINDER

PRELIMINARY ACTIONS

a. Set Standby Switch To Standby Position.
b. Turn On Gas And Electricity Supplies.
c. Arrange For System Controls To Be Calling For Heat.

spares & parts online IBASIS.CO.UK ©

8. Electrical Diagrams – Page 25

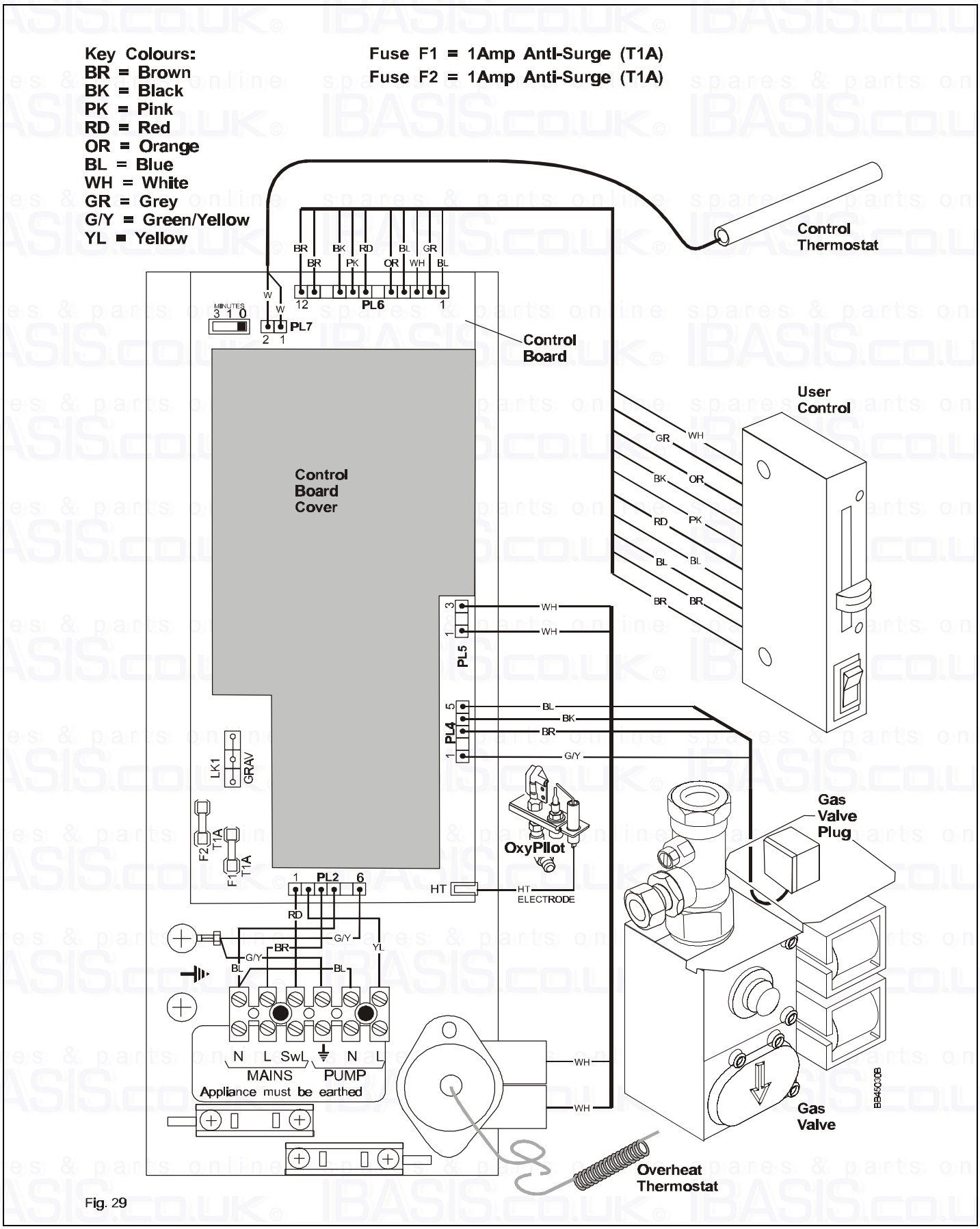

Fig. 29

9. Flow Diagrams – Page 26

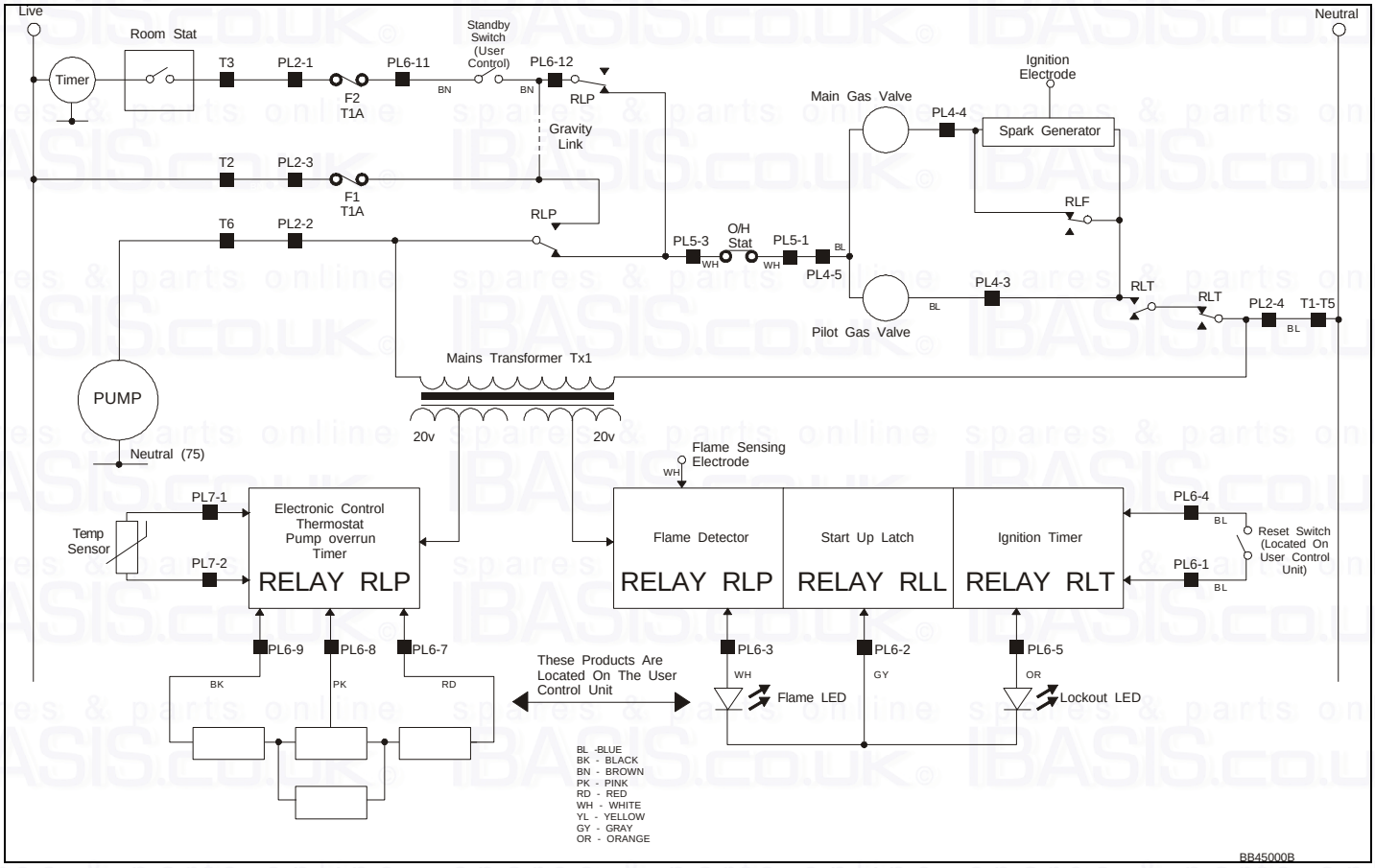

10. Short List Of Spares – Page 27

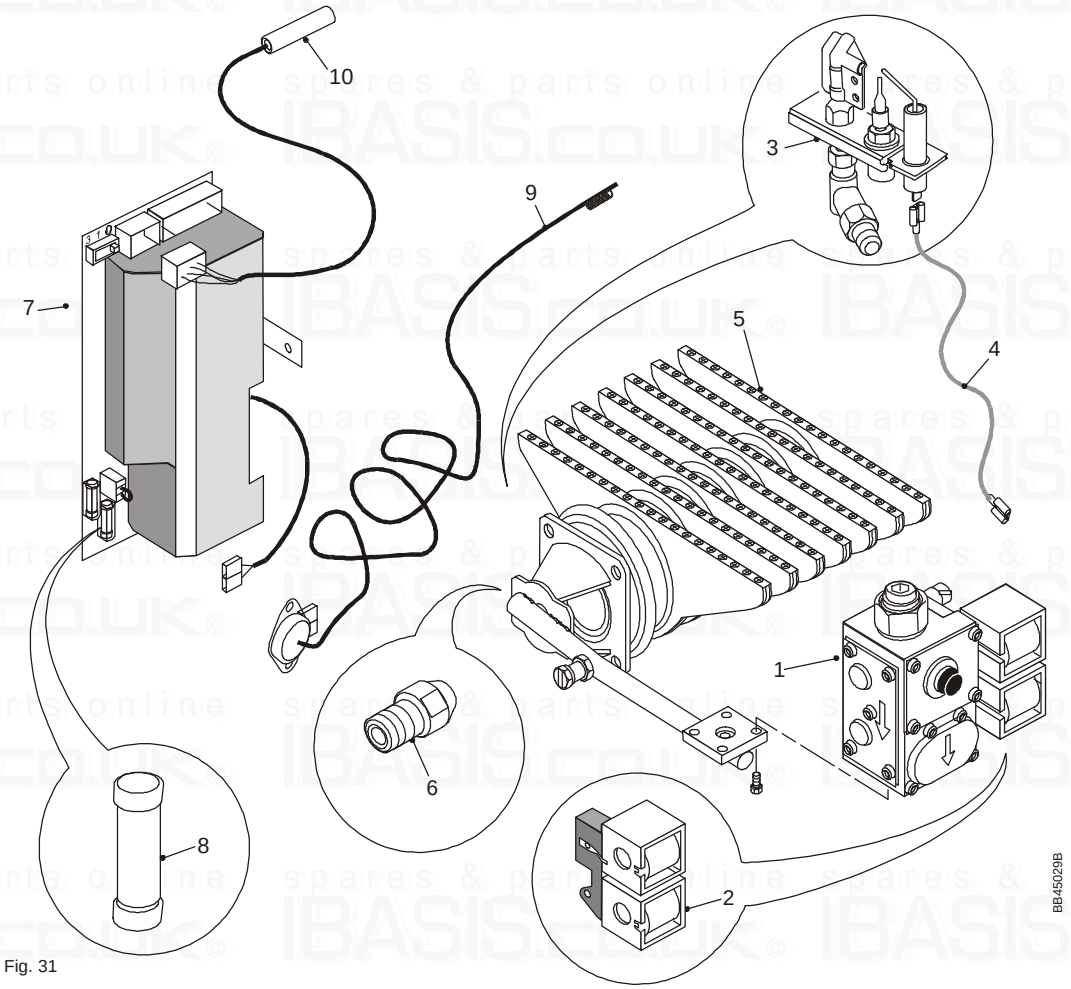

Fig. 31

Item	Description	Qty	Potterton Part No.	G.C. Part No.
1	Gas Control Valve Kit - Incl. Item 2	1	930003	289 865
2	Double Solenoid Actuator - SIT 0.007.412	1	929097	397 764
3	OxyPilot Assembly - SIT	1	402989	379 564
4	Electrode Lead Assembly	1	407738	114 608
5	Burner Assembly (45 Model)	1	414718	289 810
	Burner Assembly (55 Model)	1	414719	289 811
6	Burner Injector (45 Model)	1	625965	289 384
	Burner Injector (55 Model)	1	631334	
7	PCB - Flame Monitor & Ignition Control Incl. Item 8	1	407725	289 835
8	Fuse (F1) 1A Anti-surge (T1AH)	1	907609	289 841
	Fuse (F2) 1A Anti-surge (T1AH)	1	907609	289 841
9	Overheat Thermostat	1	404512	379 563
10	Control Thermostat	1	430048	289 833