Combi 80 Installation & Service Instructions

About the Boiler

See inside cover for models covered by these instructions.
This is a wall mounted, fanned, room sealed combination boiler.
This boiler is for use with Natural Gas (G20) Only at 20 mbar and for use in GB & IE.

About Safety

The Gas Safety (Installation and Use) Regulations 1998.

"In your own interest, and that of safety, it is law that all gas appliances are installed by competent persons, in accordance with the above regulations. Failure to install appliances correctly could lead to prosecution."

Installation must be in accordance with the User, Installation & Servicing Instructions and the rules in force.

Polythene bags used for packaging are a potential hazard to babies and young children and MUST BE CAREFULLY DISPOSED OF IMMEDIATELY.

Leave these instructions with the user for use on future calls.

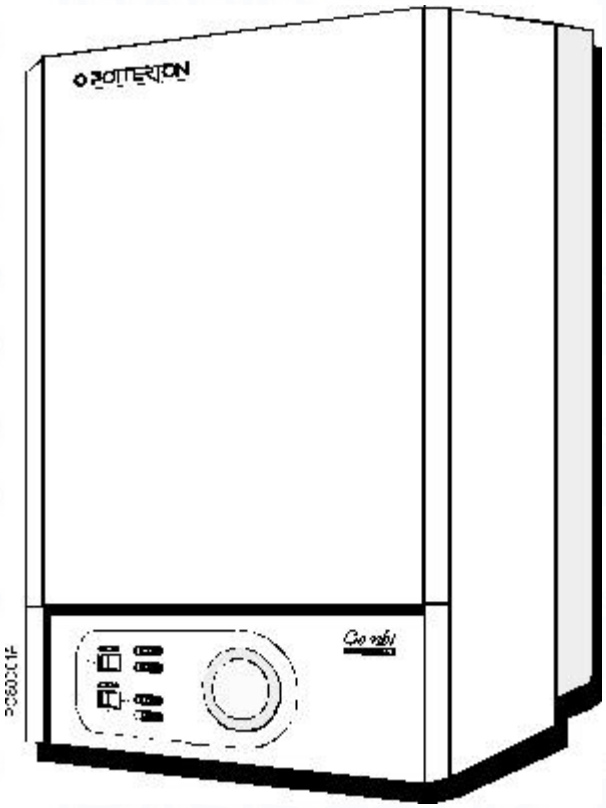

spares & parts online IBASIS.CO.UK

Contents - Page 2

Introduction **3**

1. Installation Requirements **5**
General Information 5
1.1 Gas Supply 5
1.2 Electrical Supply 5
1.3 Location of Boiler 7
1.4 Air Supply 7
1.5 Flue Systems & Termibal Location 7
1.6 Installation to an Existing System 9
1.7 Hard Water Areas 9
1.8 System Requirements 9

2. Boiler Installation **13**
2.1 Unpacking 13
2.2 Gas Connection 13
2.3 D.H.W Supply 13
2.4 C.H. Supply 14
2.5 Pressure Relief Valve 14
2.6 Wiring the Appliance 15

3. Commissioning **16**
3.1 Electrical Installation 16
3.2 Gas Installation 16
3.3 Initial Lighting 17
3.4 Gas Pressure Adjustment 18
3.5 Products of Combustion Measurement 18
3.6 D.H.W Flow Rate 19
3.7 Central Heating 19
3.8 Appliance Protection Devices 19
3.9 Complete the Installation 20

4. Servicing & Routine Maintenance **21**
4.1 Remove the White Front Case 22
4.2 Remove Base Panel 22
4.3 Remove the Air Box Covers 22
4.4 Remove the Fan Assembly 22
4.5 Remove the Flue Hood 22
4.6 Remove the Combust. Cham. Front Panel 22
4.7 To Inspect and Clean the Boiler 22
4.8 To Remove the Burner 24
4.9 Gas Pressure Adjustment 24
4.10 The Central Heating Sealed System 24
4.11 Other Components 24

5. Replacement of Parts **26**
5.1 Central Heating Overheat Thermostat 27
5.2 Dom. H/Water Limit & Frost Thermostat 27
5.3 Sensor and Ignition Electrode 27
5.4 Sensor and Ignition Leads 27
5.5 Burner 27
5.6 Injectors 27
5.7 Gas Valve 28
5.8 Modulating Valve 28
5.9 First Solenoid Valve 28
5.1 Second Solenoid Valve 28
5.11 Case Seals 28
5.12 Central Heating and Boiler Switch 30
5.13 Electronic Control Boards 30
5.14 Air Pressure Switch 31
5.15 Fan 31
5.16 Fan Seals 31
5.17 Temperature Sensor D.H.W and C.H 31
5.18 Pressure Gauge 31
5.19 Water Flow Switch D.H.W 32
5.20 Microswitch (D.H.W Flow Switch) 32
5.21 Pump 32
5.22 Diverter Valve 33
5.23 Expansion Vessel C.H 34
5.24 Expansion Vessel D.H.W 35
5.25 Heat Exchanger 35
5.26 Automatic Air Vent 36
5.27 Pressure Relief Valve 36
5.28 Transformer Assembly 37
5.29 Sight Glass with Securing Frame 37

6. Fault Finding **38**
7. Electrical Layouts **39**
Control Flow Sequence 40
Functional Flow 40
Electrical Diagram 41
8. Product Specification **42**
9. Optional Extras **43**
10. Short List of Spares **46**

The model covered by these instructions is:-

Combi 80 G.C. No. 47-393-03

SAFETY, PERFORMANCE & QUALITY

This appliance has been assessed by a Government appointed Notified Body and shown to meet the "ssential Requirements' of the European Gas Appliance Directive

The Directive lays down requirements for the safety and efficiency of the appliance, together with its design, construction, and use of materials.
It also requires the production process to be covered by an approved and monitored system of quality assurance.

IMPORTANT

This appliance has been certified for safety. It is therefore important that no external control device (e.g. flue dampers, economisers, etc.) be directly connected to the appliance unless covered by these Installation & Service Instructions or otherwise recommended in writing.

Any direct conenction of a control device not approved by Potterton Limited, could invalidate the CE Certification and normal appliance warranty.

Codes of Practice

- The boiler must be installed in accordance with: The Gas Safety (Installation & Use) Regulations 1998 and the current issue of:-

  The Building Regulations, Building Standards (Scotland) Regulations, Local Building Regulations, Model & Local Water Undertaking Bye Laws. I.E.E Regulations, Health and Safety Document No.635. (The Electricity at Work Regulations 1989), BS. 6891, BS. 6798, BS. 5449, BS. 5546, BS. 5440:1, BS. 5440:2, BS 7593 & BG. DM2.

- Samples of the Combi 80 combination boiler have been examined by Gastec, a Netherlands Notified Body. The range is certified to comply with the essential requirements of the Efficiency Directive 92/42/EEC, the Gas Appliance Directive 90/396/EEC, the Low Voltage Directive 72/23/EEC and shows compliance with the Electro Magnetic Compatibility Directive 89/336/EEC and are therefore permitted to carry the CE Mark.

- The appliance has been tested and approved by the WRc as meeting the requirements of G3 and L of the Building regulations and water Bylaws Scheme - Approved Products.

About the Boiler

- The Combi 80 adjusts automatically to provide central heating outputs between 24 kW (81,880 Btu/h) and 10.4 kW (35,480 Btu/h) to suit the system requirements.

- The boiler is designed for use with fully pumped sealed system only.

- It is supplied fully tested and assembled with a circulating pump, diverter valve, pressure gauge, pressure relief valve, and expansion vessels.

- The appliance has two completely separate heating systems embedded into a copper heat exchanger. Both systems are completely independent.

  Central Heating: A central heating switch controls the choice of service between central heating and hot water only. The boiler water flow system is shown in Fig. 1.

  With the central heating switch set to 'Off' and the boiler switch set to 'On', the combination boiler fires only when hot water is drawn off.

  With the central heating switch set to 'Timed' the boiler will operate the central heating for the time periods set on the optional internal or externally mounted timeclocks. If 'Constant' is selected the boiler will operate continuously.

  The central heating is supplied at a pre-set temperature determined by the central heating thermostat setting.

  If domestic hot water is drawn off while the central heating is running the combination boiler will automatically transfer the boiler heat output to the domestic hot water supply.

  Domestic Hot Water: Domestic hot water has priority over the central heating system and is generated instantaneously within the appliance.

  At the minimum hot water draw-off rate the maximum temperature is limited to 70 °C by the modulating gas control.

- Data plates are positioned on the front of the air box door and a boiler serial badge is on the underside of the air box. A duplicate serial badge is positioned on the underside of the case base for customer reference.

Delivery

- The boiler is delivered in two packages (1) the boiler and (2) the flue assembly.

Health and Safety Information for the Installer and Service Engineer

- Under the Consumer Protection Act 1987 and Section 6 of the Health and Safety at Work Act 1974, we are required to provide information on substances hazardous to health.

- Small quantities of adhesives and sealants used in the product are cured and present no known hazards.

- The following substances are also present.

Insulation and Seals

Material - Man Made Mineral Fibre.
Description - Boards, Ropes, Gaskets.
Known Hazards - Some people can suffer reddening and itching of the skin. Fibre entry into the eye will cause foreign body irritation which can cause severe irritation to people wearing contact lenses. Irritation to respiratory tract.
Precautions - Dust goggles will protect eyes. People with a history of skin complaints may be particularly susceptible to irritation. High dust levels are only likely to arise following **harsh** abrasion. In general, normal handling and use will not present high risk, follow good hygiene practices, wash hands before, touching eyes, consuming food, drinking or using the toilet.
First Aid - Medical attention must be sought following eye contact or prolonged reddening of the skin.

Heat Exchanger

Material - Copper with lead/tin coating.
Description - Finned copper tube.
Known Hazards - Inhalation or ingestion of lead dust or fumes may cause headache and nausea.
Precautions - Unused heat exchangers present minimal risk to health other than normal hygiene practices would demand regarding washing before eating etc. Deposits found on or below a heat exchanger that has been in use could contain lead oxide. Avoid inhalation by using a vacuum cleaner in conjunction with other cleaning tools when servicing the appliance.

Central Heating Waterways

Material - Water corrosion inhibitor
Description - Low concentration of inhibitor in residual water.
Known Hazards - Irritant to eyes.
Precautions - Avoid contact with eyes.
First Aid - Eye contact, flush with plenty of running water immediately. Seek medical attention.

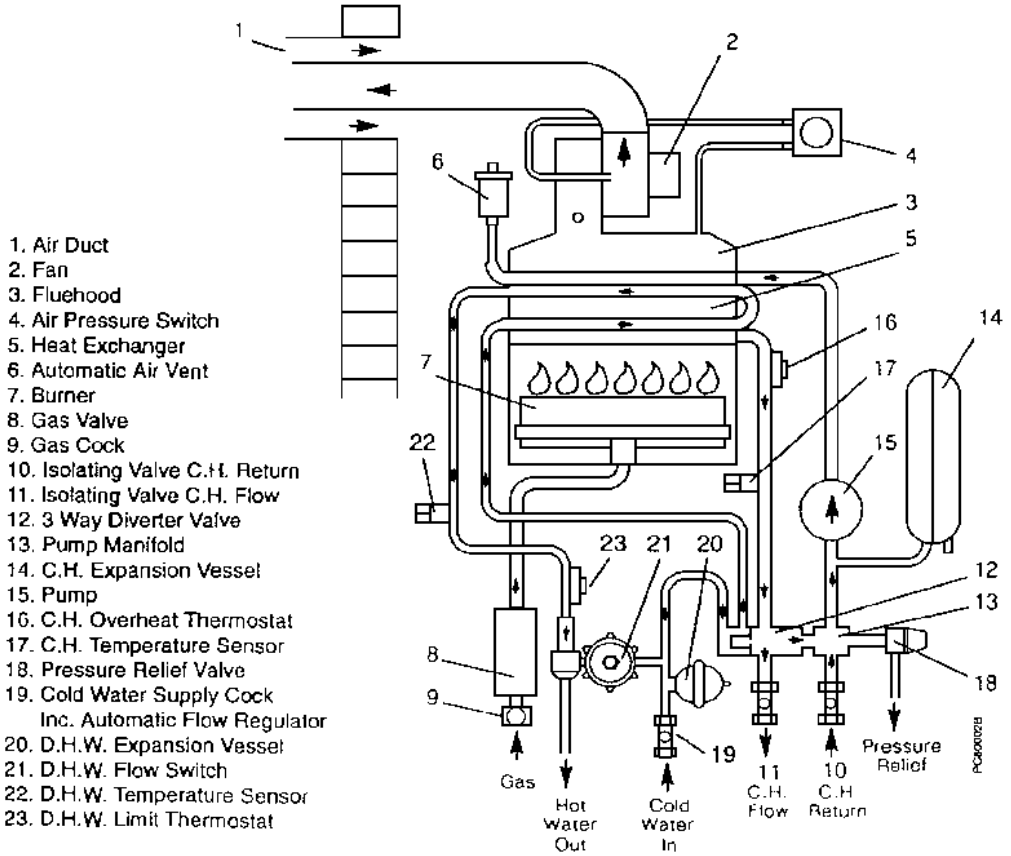

Fig. 1

1. Installation Requirements - Page 5

General Information

- Both the user and the manufacturer rely heavily on the installer, whose job it is to install the combination boiler, and connect it to a correctly designed heating system. Acquaint yourself with the British Standards concerning installation requirements.

  It is recommended that tools suitable for brass fittings are used, and have a capability to accommodate hexagon sizes up to 50 mm.

  Please read the information on Inhibitors - Page 12.

  Manufacturers instructions must not be taken in any way as over-riding statutory obligations.

1.1 Gas Supply

- The local Gas Region should be consulted, at the installation planning stage, in order to establish the availability of an adequate supply of gas.
- An existing service pipe must NOT be used without prior consultation with the Local Gas Region.
- A gas meter can only be connected by the Local Gas Region, or by a Local Gas Region Contractor.
- An existing meter should be checked, preferably by the Gas Region, to ensure the meter is adequate to deal with the rate of gas supply required.
- Installation pipes should be fitted in accordance with BS 6891.
- Pipework from the meter to the combination boiler must be of an adequate size.
- Do NOT use pipes of a smaller size than the combination boiler inlet gas connection (15mm).
- The complete installation must be tested for gas soundness and purged as described in BS 6891.

1.2 Electrical Supply

- Wiring external to the appliance MUST be in accordance with the current I.E.E. Regulations for Electrical Installations, and any Local Regulations which apply. The combination boiler is supplied for 230 Volts ~ 50 Hz, Single Phase. To protect the appliance it is essential that the electrical supply is fused at 3 A rating.
- **THIS APPLIANCE MUST BE EARTHED.**
- The method of connection to the mains electricity supply must provide means of completely isolating the electrical supply to the combination boiler and its ancillary controls.
- The appliance is designed to be the wiring centre for the installation, therefore no additional live supplies are required from either timers or room thermostats.
- Isolation is preferably by the use of a fused three-pin plug and unswitched shuttered socket-outlet, both complying with the requirements of BS 1363. OR a **3 A fused** double-pole switch, having a 3mm contact separation on both poles can be used. It is important that the point of connection to the mains should be readily accessible and adjacent to the combination boiler.

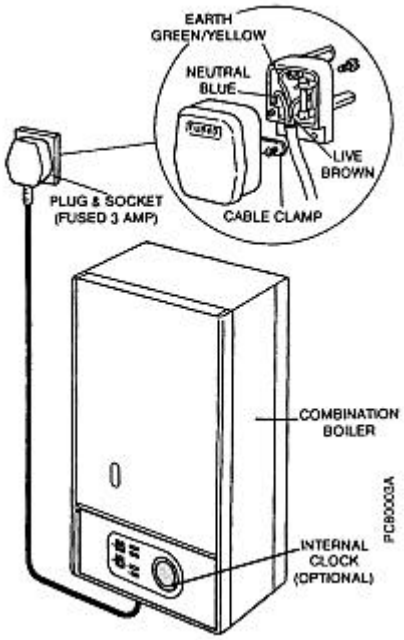

Fig 3

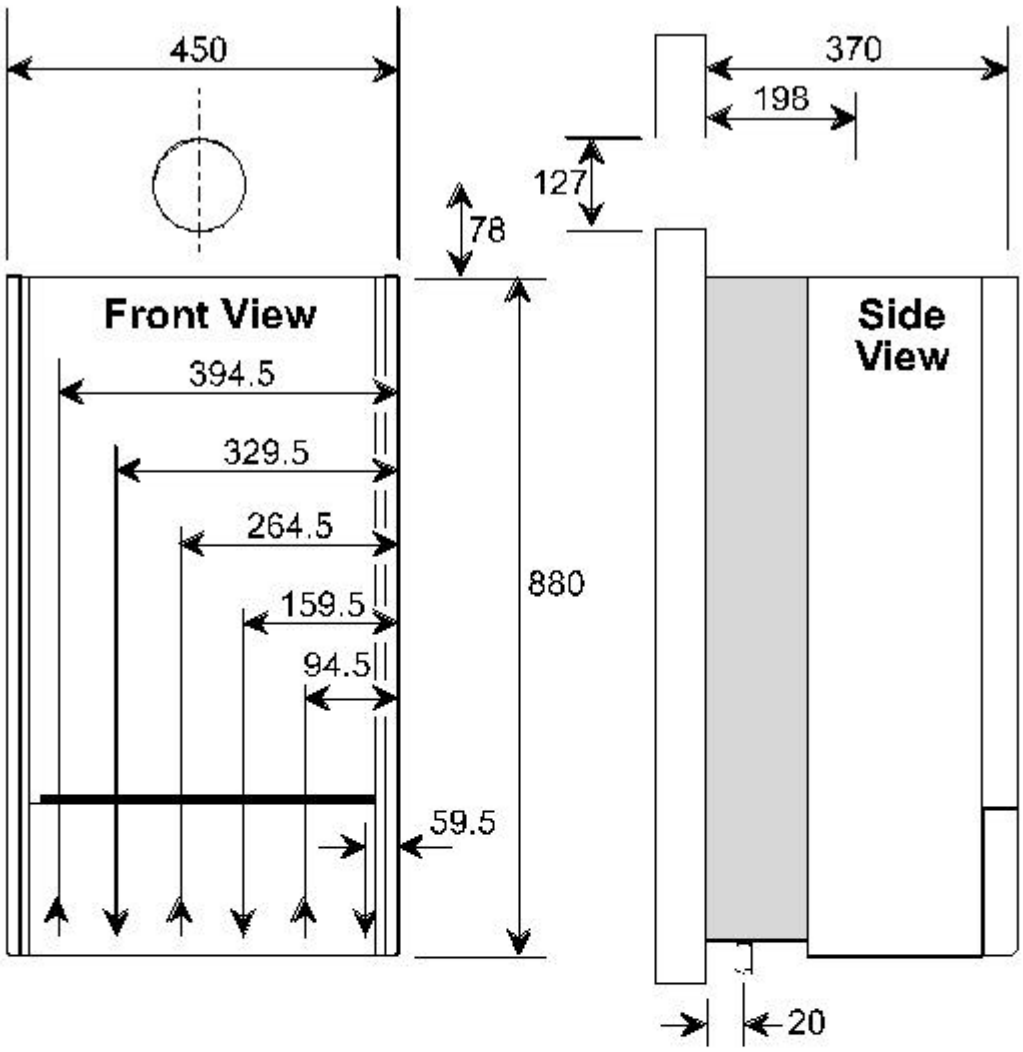
450
370
198
127
78
Front View
Side View
394.5
329.5
264.5
159.5
94.5
880
59.5
20

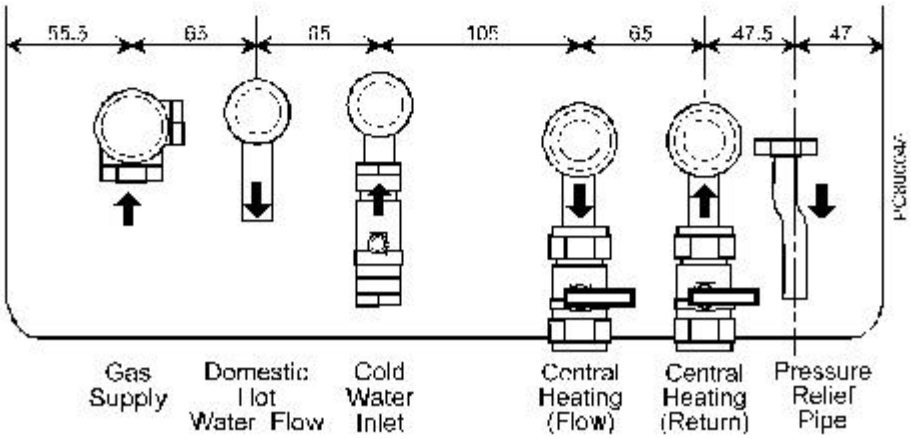
55.5
65
65
105
65
47.5
47
Gas Supply
Domestic Hot Water Flow
Cold Water Inlet
Central Heating (Flow)
Central Heating (Return)
Pressure Relief Pipe

1.3 Location Of Boiler

- In siting the combination boiler, the following limitations, MUST be observed:

  a) The position selected for installation should be within the building, unless otherwise protected by a suitable enclosure. It must allow adequate space for installation, servicing and air circulation around the appliance.

  b) This position MUST also allow the chosen flue termination to be made correctly. The boiler must be installed on a flat vertical wall which is capable of supporting the weight of the appliance and any ancillary equipment.

- The appliance may be installed on a combustible wall, subject to the requirements of the Local Authorities and Building Regulations.

- **IMPORTANT NOTICE:** If the combination boiler is to be fitted in a timber framed building it should be fitted in accordance with the British Gas publication 'Guide for Gas Installations in Timber Frame Housing'. (Reference DM2). If in doubt advice must be sought from the Local Gas Region.

- The combination boiler may be installed in any room or internal space, although particular attention is drawn to the requirements of the current I.E.E. Wiring Regulations, and in Scotland, the electrical provisions of the Building Regulations applicable in Scotland, with respect to the installation of the combination boiler in a room or internal space containing a bath or shower.

- Where a room-sealed appliance is installed in a room containing a bath or shower, any electrical switch or appliance control, utilising mains electricity should be so situated that it cannot be touched by a person using the bath or shower.

- A compartment used to enclose the combination boiler MUST be designed and constructed specifically for this purpose. An existing cupboard, or compartment, may be used provided it is modified accordingly. See Section 1.4 'Air Supply'.

- Where installation will be in an unusual location, special procedures may be necessary. BS 6798 gives detailed guidance on this aspect.

- **Clearances around the Appliance** - Fig. 4.

  Side Clearance: For operation and servicing, 25 mm each side.

  Top Clearance: A minimum of 160 mm, but 300 mm is preferred to allow removal of the central heating expansion vessel, without removing the appliance from the wall, if replacement is required.

  Bottom Clearance: A bottom clearance of 220 mm is required between the appliance and any surface.

  Frontal Clearance: A minimum of 500 mm is required in front of the appliance for access during servicing, the front clearance can be reduced providing the door/cover can be removed to expose the entire case front.

1.4 Air Supply

- Detailed recommendations for air supply are given in BS 5440:2. The following notes are intended for general guidance: It is not necessary to have a purpose provided air vent in the room or internal space in which the combination boiler is installed. If the combination boiler is to be installed in a cupboard or compartment, permanent air vents are required (for cooling purposes) in the cupboard/compartment, at both high and low levels. The air vents must either communicate with a room/or be direct to outside air.

Position of Air Vent	Air from Room/ Internal Space	Air Direct from Outside
High Level	270 cm^2 42 in^2	135 cm^2 21 in^2
Low Level	270 cm^2 42 in^2	135 cm^2 21 in^2

Table 1. Air Supply

1.5 Flue Systems & Terminal Location

- The **standard horizontal** flue system is suitable for installations up to 1092 mm, measured from the centre line of the boiler outlet to the outside face of the wall. The wall liner enclosed will accommodate thicknesses of 400 mm and can be cut to a minimum length of 76 mm.

- **One metre flue extension** kits are available to extend horizontal flues to a maximum length of 3078 mm.

- **90° In-line** elbow kits and **135° In-line Bend** kits are also available for more flexible siting. Horizontal flues can be set at 45° angles to the combination boiler, through 360°, to the miniature terminal on the outside of the building.

- **A Concentric Vertical flue** system is available which when used in conjunction **with One metre flue extension** kits is suitable flue heights up to 3 metres to terminate through a roof.

- **A Twin tube Vertical flue** system is also available for flue heights up to 8025 mm when used in conjunction with **one metre twin tube extension** kits.

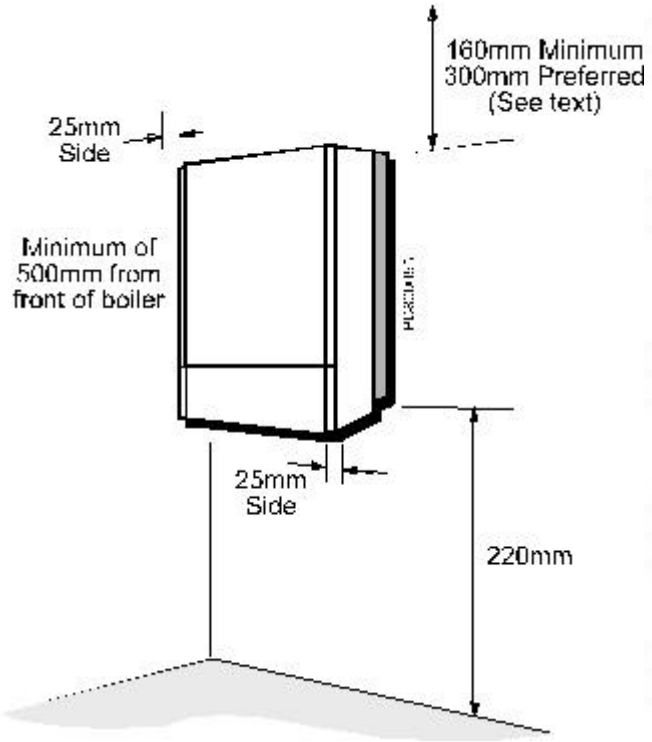

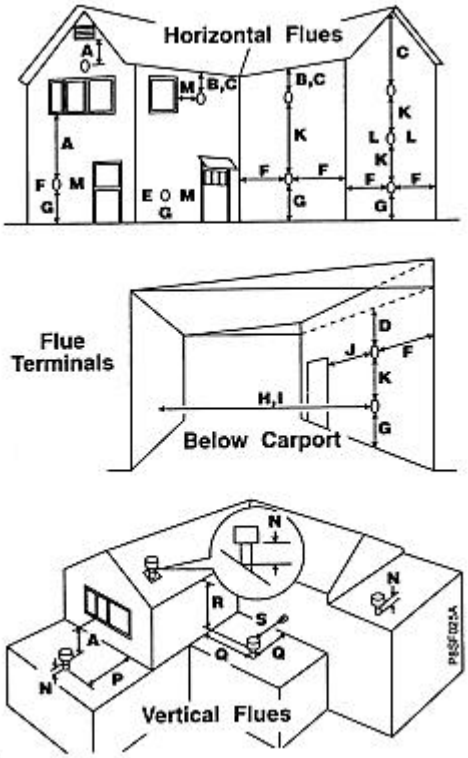

Fig. 5

- **135° Off-set** kits are available for both concentric and twin tube.
- A **Pitched Roof Flashing** kit and **Flat Roof Flashing** kit are available for use with the vertical flue systems.
- If a horizontal flue is sited less than 2 metres above a balcony, above ground, or above a flat roof to which people have access, a suitable terminal guard must be fitted. This serves two purposes, to protect the terminal against damage or interference and to protect passers-by.

Note: Where a flue terminal is installed less than 1 metre from a plastic, or painted gutter, or 500 mm from painted eaves, an aluminium shield 1 metre long, should be fitted to the underside of the gutter or painted surface. A suitable wall plate should be fitted to the painted wall surface of a mobile home.

IMPORTANT: It is absolutely ESSENTIAL, to ensure that products of combustion discharging from the terminal cannot re-enter the building, or any other adjacent building, through ventilators, windows, doors, natural air infiltration, or forced ventilation/air conditioning. If products of combustion are found to be re-entering any building, the appliance MUST be turned OFF IMMEDIATELY.

POSITION		MIN. DISTANCE mm
A	DIRECTLY BELOW AN OPENABLE WINDOW, AIR VENT, OR ANY OTHER VENTILATION OPENING	300
B	BELOW GUTTER, DRAIN/SOIL PIPE	75
C	BELOW EAVES	200
D	BELOW A BALCONY/CARPORT ROOF	200
E	FROM VERTICAL DRAIN PIPES AND SOIL PIPES	75
F	FROM INTERNAL OR EXTERNAL CORNERS	25
G	ABOVE ADJACENT GROUND OR BALCONY LEVEL	300
H	FROM A SURFACE FACING THE TERMINAL	600
I	FACING TERMINALS	1200
J	FROM OPENING (DOOR/WINDOW) IN CARPORT INTO DWELLING	1200
K	VERTICALLY FROM A TERMINAL ON THE SAME WALL	1500
L	HORIZONTALLY FROM A TERMINAL ON THE SAME WALL	300
M	ADJACENT TO OPENING	300
N	ABOVE ROOF LEVEL (TO BASE OF TERMINAL)	300
P	FROM ADJACENT WALL TO FLUE	210
Q	FROM INTERNAL CORNER TO FLUE	230
R	BELOW EAVES OR BALCONY	600
S	FROM FACING TERMINAL	1200

1.6 Installation to an Existing Central Heating System

- The appliance is designed to operate on a sealed system only, therefore if the existing system is of the open type it will have to be modified to comply with BS 6798.

- Before installing a new combination boiler to an existing system flush out the old system with a recommended descaling/flushing agent at least twice, see Inhibitors on Page 12.

- Also check pipework and renew any corroded pipework or fittings. Valve glands must be re-packed or replaced wherever necessary and any defective controls replaced.

1.7 Hard Water Areas

- If the area of installation is recognised as a hard water area, (above 200 p.p.m.) it is essential that a suitable water treatment device of an electronic, magnetic or galvanic type be installed in the mains water supply. Consult with the Local Water Company.

1.8 System Requirements

Before installing the boiler onto the system read the section on Page 12 about Inhibitors.

Domestic Hot Water

- The domestic hot water system must be in accordance with the relevant recommendations of BS 5546. Copper tubing to BS 2871:1 is recommended for water carrying pipework and MUST be used for pipework carrying potable water. All capillary joints in the D.H.W pipework must be joined with a lead free solder.

Central Heating

- This appliance has been specifically designed for **sealed systems** only. Therefore the central heating system should be in accordance with the relevant recommendations given in BS 6798 and also, smallbore and microbore systems BS 5449 Part 1.

- **For correct operation the boilers require a by-pass.** A valved by-pass should be fitted and the flow reduced to balance the system correctly. The length of the by-pass pipework is not important.

  Note: If the by-pass flow is reduced too much this will cause the appliances to overheat and go to lockout.

- The installation should be designed to work with flow temperatures of up to 90 °C. All components of the system must be suitable for a maximum pressure of 3 bar (45 psi) and a temperature of 110 °C.

- The following components are incorporated within the appliance.

  a. Circulating pump.
  b. Diverter valve.
  c. Pressure Relief valve with a non-adjustable pre-set lift pressure of 3 bar (45 psi).
  d. Pressure gauge covering the range 0-4 bar (0-60 psi).
  e. 10 litre expansion vessel with initial charge pressure of 1.0 bar (14 psi).
  f. Domestic Hot Water flow switch.

- The central heating output from the boiler can easily be downrated if a lower temperature drop across the system is prefered.

- Ancillary pipework, not forming part of the useful heating surface, should be lagged to prevent heat loss and any possible freezing, particularly where pipes run through roof spaces and ventilated under-floor spaces.

- If the capacity of the central heating system should exceed 100 litres, an additional vessel should be installed on the return to the combination boiler from the heating system. Guidance on vessel sizing is given in Table 2 - Page 10.

- To allow the maximum central heating expansion capacity in the boiler the pre-charge pressure in the central heating expansion vessel must be marginally greater than the initial (cold) system pressure at the appliance (as shown on the appliance pressure gauge).

- Draining taps should be at least 1/2 in BSP nominal size and be in accordance with BS 2879.

- **External Controls**

  To obtain economical use of the appliance it is advisable to fit external controls. The controls can take the form of:-

  a. Time clock (two internal options are available)
  b. Room thermostat
  c. Thermostatic radiator valves (TRV's)
  c. Zone valves

  A combination of these controls will produce economical and effective use of the heat generated by the boiler. It is advisable to control the temperature of the main living area with a room thermostat and other areas by TRV's.

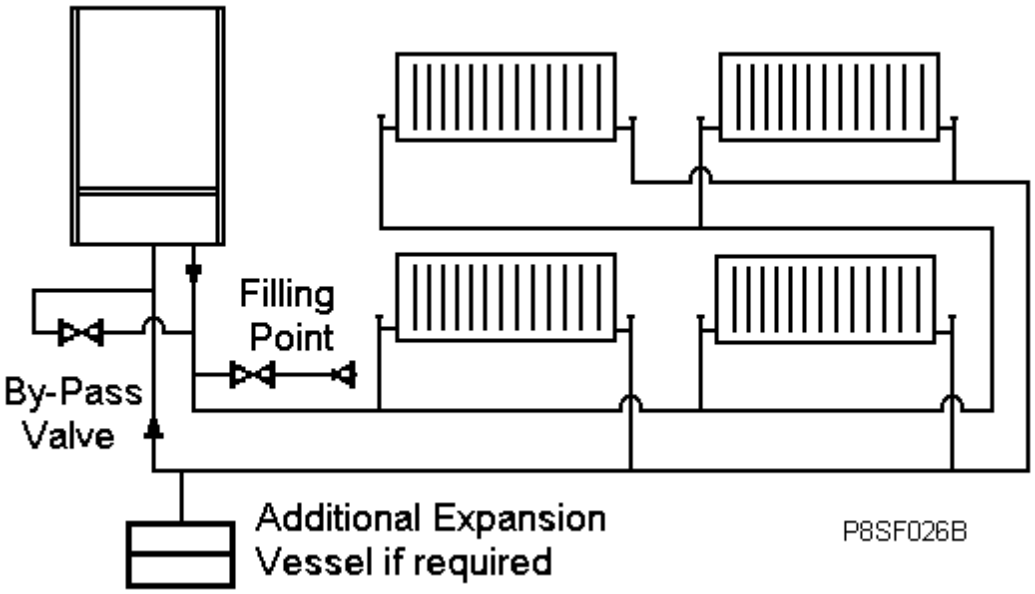

Fig 6

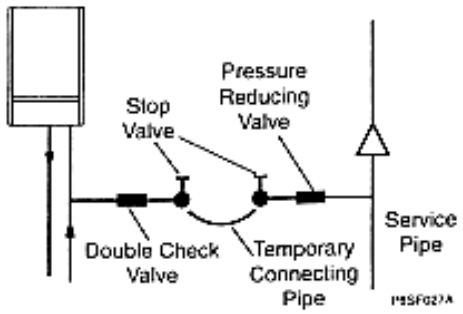

Safety Valve Setting (bar)	3.0	
Initial System Pressure (bar)	1.0	1.5
Total Water Content of System	VESSEL VOLUME (L)	
litres	litres	litres
25	2.7	3.9
50	5.4	7.8
75	8.2	11.7
100	10.9	15.6
125	13.6	19.5
150	16.3	23.4
175	19.1	27.3
200	21.8	31.2
225	24.5	35.1
250	27.2	39.0
275	30.0	42.9
300	32.7	46.8
325	35.7	50.7
350	38.1	54.6
375	40.9	58.5
400	43.6	62.4
425	46.3	66.3
450	49.0	70.2
475	51.8	74.1
500	54.5	78.0
For system volumes other than those given above, multiply the system volume by the factor across	0.109	0.156

Table 2. Expansion Vessel Requirements

Deduct from the value given in the table
the10 litre expansion vessel supplied.

- ## Frost Protection

The appliance is fitted with an internal frost thermostat, however this device is purely for the protection of the appliance. If any other part of the central heating system requires frost protection, an external frost thermostat should be fitted.

- ## Mains Water Feed: Central Heating

A connection must be incorporated into the central heating system to facilitate filling. There must be no direct connection to the mains water supply, even through a non-return valve, without the approval of the Local Water Authority.

Permissible methods of filling

(1) Direct Method - Fig. 6

A detachable flexible hose is connected to a stop valve fitted to an outlet on the service main. The other end of the hose is connected to a second stop valve and a double check valve. The double check valve is fitted to an inlet connection on the central heating return pipe under the appliance. The hose should be disconnected after filling. Where the mains pressure is excessive a pressure reducing valve shall be used to make filling easier. The following fittings shall form a permanent part of the system and shall be fitted in the order stated.

a. A stop valve complying with the requirements of BS 1010 Part 2, (the temporary hose from the draw off tap shall be connected to this fitting).
b. Double check valve of an accepted type.

(2) Booster Pump Method

The system may be filled through a self contained unit comprising a cistern, pressure booster pump and if necessary, an automatic pressure-reducing valve or flow restrictor.

The pressure booster pump must be capable of pressurising the system to a minimum of 1.0 bar (14 p.s.i.) measured at the appliance.

The cistern should be supplied through a temporary connection from a service pipe or cold water distributing pipe. The unit may remain permanently connected to the heating system to provide limited water make-up.

Provisions for make up water

Provision should be made for replacing water loss from the system by re-pressurisation of the system.
Reference should be made to British Gas Publications "Material and Installation Specifications for Domestic Central Heating and Hot Water".

- ## Pump Performance Curve

The circulating pump fitted within the appliance should be capable of satisfying most system requirements. For central heating systems greater than 15 kW it may be necessary to use a higher "design temperature drop across system" to meet the system pump head requirement. The design temperature drop should not exceed 20 °C (36 °F). Fig. 7 indicates the amount of pump head available for the system. The boiler resistance is already taken into account in this curve.

How to Use Fig. 7.

Starting with the required SYSTEM HEATING LOAD, draw a vertical line downwards so that it intersects the chosen SYSTEM DESIGN TEMPERATURE DROP line, normally this would be 11 °C (20 °F) although up to 17 °C (30 °F) can be used without increasing radiator sizes. From this intersection point draw a horizontal line so that it intersects the PUMP CURVE. From this intersection draw a vertical line upwards.

The AVAILABLE PUMP HEAD can now be read from the horizontal scale, and the corresponding FLOW RATE from the vertical scale in the centre of the chart.

The system must be designed so that its hydraulic resistance does not exceed the available head unless an additional circulating pump is fitted.

If the designed flow rate through the boiler is less than 11.5 l/min, the boiler could be noisy and ultimately overheat. See note on system by-pass in Section 1.8.

- ## Central Heating Range Rate

For most installations the boiler will automatically adjust the central heating output to match your heating system requirement.

Systems which have very low water content and a low heating requirement may benefit by reducing the maximum boiler output. This is achieved by rotation of the adjustment knob, located on the electronic modulation control board. (Fig. 19, Page 30).

The boiler central heating output can be adjusted between the maximum and minimum values stated on the data badge. Operation of this adjuster will not affect the maximum boiler output when domestic hot water is being drawn off.

- **Inhibitors**

When the heating system has been completed, it should be cleaned thoroughly in accordance with BS 7593 (code of practice for Treatment of Water in Domestic Hot Water Central Heating Systems) to prevent foreign matter from entering the boiler.

Ideally, it should be flushed before the boiler is connected, and again after the system has been heated and is still warm. BetzDearborn Sentinel X300 or Fernox Superfloc are our recommended cleansers for new systems.

Where a boiler is being fitted as a replacement to an existing system, it is best practice to clean the system prior to fitting the new boiler. In this case BetzDearborn Sentinel X400 or Fernox Superfloc should be used.

In order to minimise corrosion in the system, inhibit scale formation and microbiological growth, we recommend that an inhibitor is added to the system when it is refilled following the final (hot) flushing. BetzDearborn Sentinel X100 or Fernox MB-1 are suitable products.

For more information regarding cleansers and inhibitors, contact:

BetzDearborn Ltd.
Widnes, Cheshire.
WA8 8UD.
Telephone 0151 420 9563.

Fernox Alpha Fry Ltd.
Tandem House, Marlowe Way,
Beddington Farm Road,
Croydon. CR0 4XS.
Telephone 01799 550811.

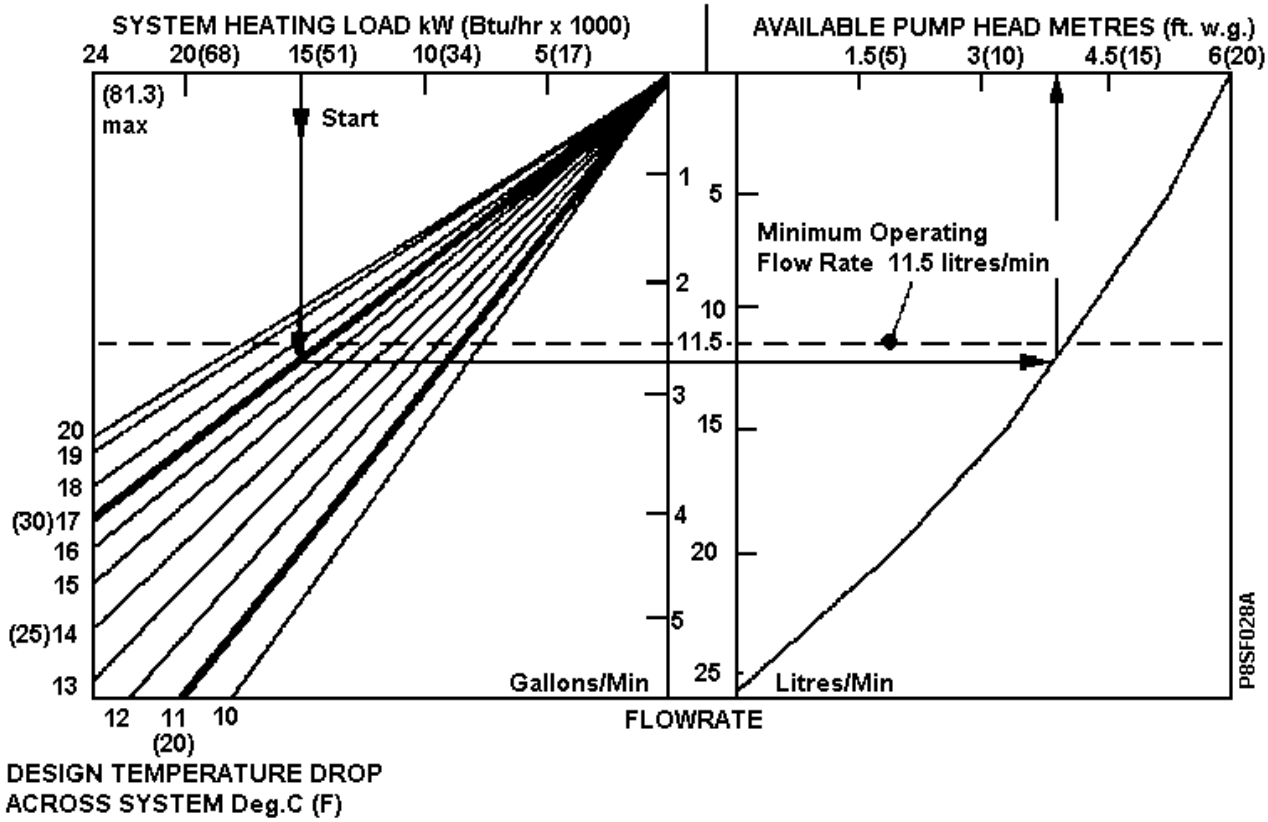

Fig 7

2. Installation - Page 13

- It is **MOST IMPORTANT** that the appliance is installed in a **VERTICAL POSITION**, with the flue system passing through the wall or ceiling in a **Horizontal** or **Vertical** plane. A minor deviation from the horizontal is acceptable, provided that this results in a downward slope of the flue system away from the combination boiler.

2.1 Unpacking

1. Unpack the cartons and check the contents.
2. Remove the white front case as follows; undo the two securing screws at the base of the panel, pull the base of the panel forward approx. 50 mm and lift off the supporting top hooks. (Fig. 8)
3. Remove the base cover by removing the two fixing screws and push the cover towards the rear to release
4. Each side panel can now be individually removed by removing the two front fixing screws, loosening the lower rear fixing screw and sliding the panel upwards to unhook from the upper rear fixing. Place each panel safely to one side.
5. Position the appliance onto its side and remove the four screws retaining the lowest rear cross brace. This brace is for transit purposes only and should be discarded. Remove all plastic plugs from the pipes, a small quantity of water may be present.
6. *At this point follow the Installation Instructions supplied with the Flue System, then proceed as follows:-*
7. Boiler Connections: All connections to the appliance are supplied unassembled in the boiler carton on a vacuum formed card. Remove all fittings and assemble to the appliance.

   Note: When fitted, the Red levered central heating tail (C.H.flow) should be to the left of the Blue.

2.2 Gas Connection

A minimum gas pressure of 20 mbar (8" w.g.) must be available at the combination boiler inlet at full flow rate.

Install a gas supply pipe not less than 15mm diameter copper to the combination boiler and connect to the gas service cock. 15 mm diameter pipe will be adequate if the length of pipe from the boiler to the gas meter is less than 3 m, longer lengths will require 22 mm pipe.

2.3 D.H.W. Supply

1. The domestic hot water circuit does not need a pressure relief valve, but it is essential to ensure that the pressure of the cold water supply does not exceed 10 bar (145 lb/in), if in doubt it is advisable to install a pressure reducing valve. The minimum pressure needed to operate the domestic hot water system is 1 bar with a flow of approximately 2.5 litres per minute.
2. Flush out all foreign matter from the supply pipe before connecting to the appliance.

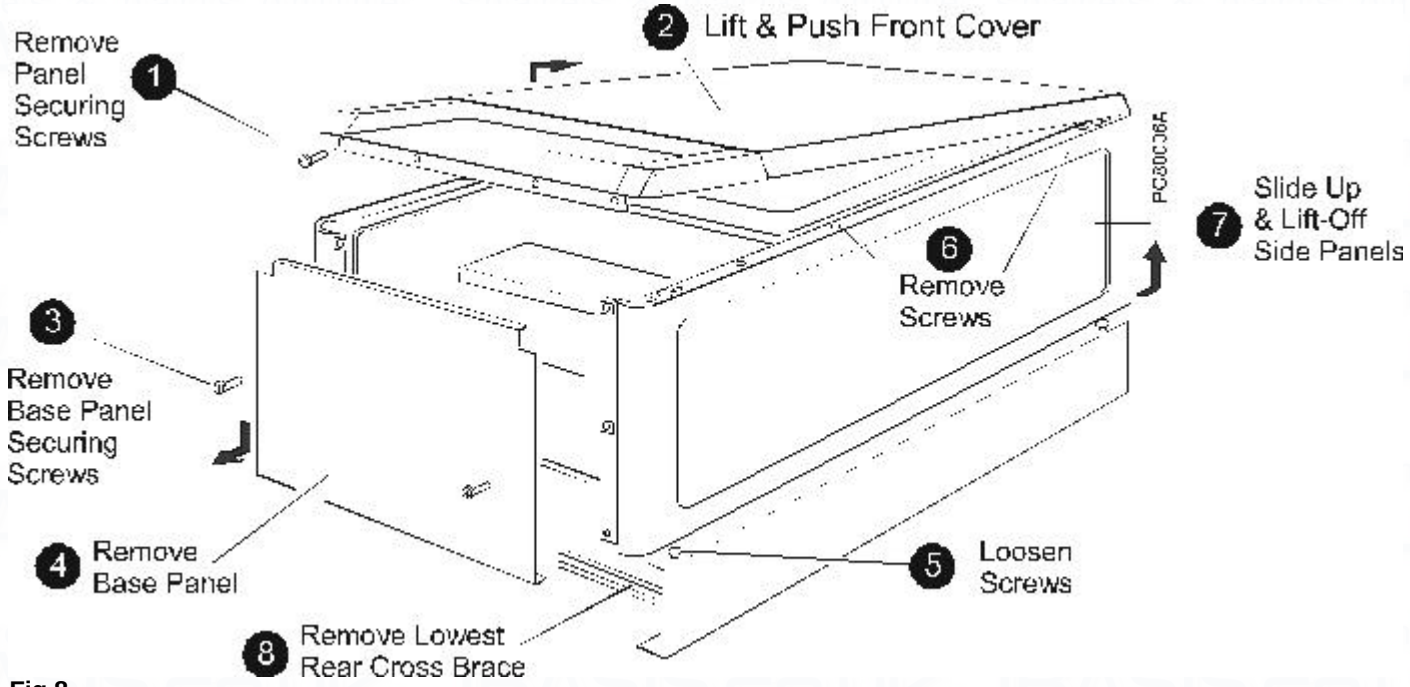

Fig 8

3. Connect the cold water supply to the 15 mm isolating cock.

4. Connect the hot water outlet pipe using a 15 mm compression fitting.

   Note: The cold water supply isolating cock incorporates a water strainer. There is an automatic flow limiting device in the inlet fitting - see Fig. 13.

   Showers

   If a shower control is to be supplied from the Combination unit it should be of the type which incorporates a pressure balancing valve (i.e. MIRA 415 EQUAMATIC).
   If the shower control is existing and is of a mechanical type, it may be necessary to fit a drop tight pressure reducing valve to the mains supply. Refer to the Shower Manufacturers instructions.

   Note: Showers with a loose flexible hose may require the fitting of a double check valve, to comply with water Bye-law 17. This should be fitted down stream of the appliance.

2.4 C.H. Water Connections

1. Before any central heating connections are made to the combination boiler, all system valves should be opened and the system thoroughly flushed out with cold water.

2. Connect the central heating return pipe to the isolating cock identified by a Blue lever. (right hand of the two pipes)

3. Connect the central heating flow pipe to the isolating cock identified by a Red lever. (left hand of the two pipes)

2.5 Pressure Relief Valve

The pressure relief valve is pre-set at 3 bar.

Install a pressure relief valve discharge pipe, not less than 15 mm diameter and connect to the pressure relief outlet.

The position of the discharge pipe should be such that any discharge of water or steam cannot create a hazard to persons in or about the premises, or damage to electrical components or wiring, and the point of discharge should be clearly visible.

It is recommended that the discharge point be over an outside drain.

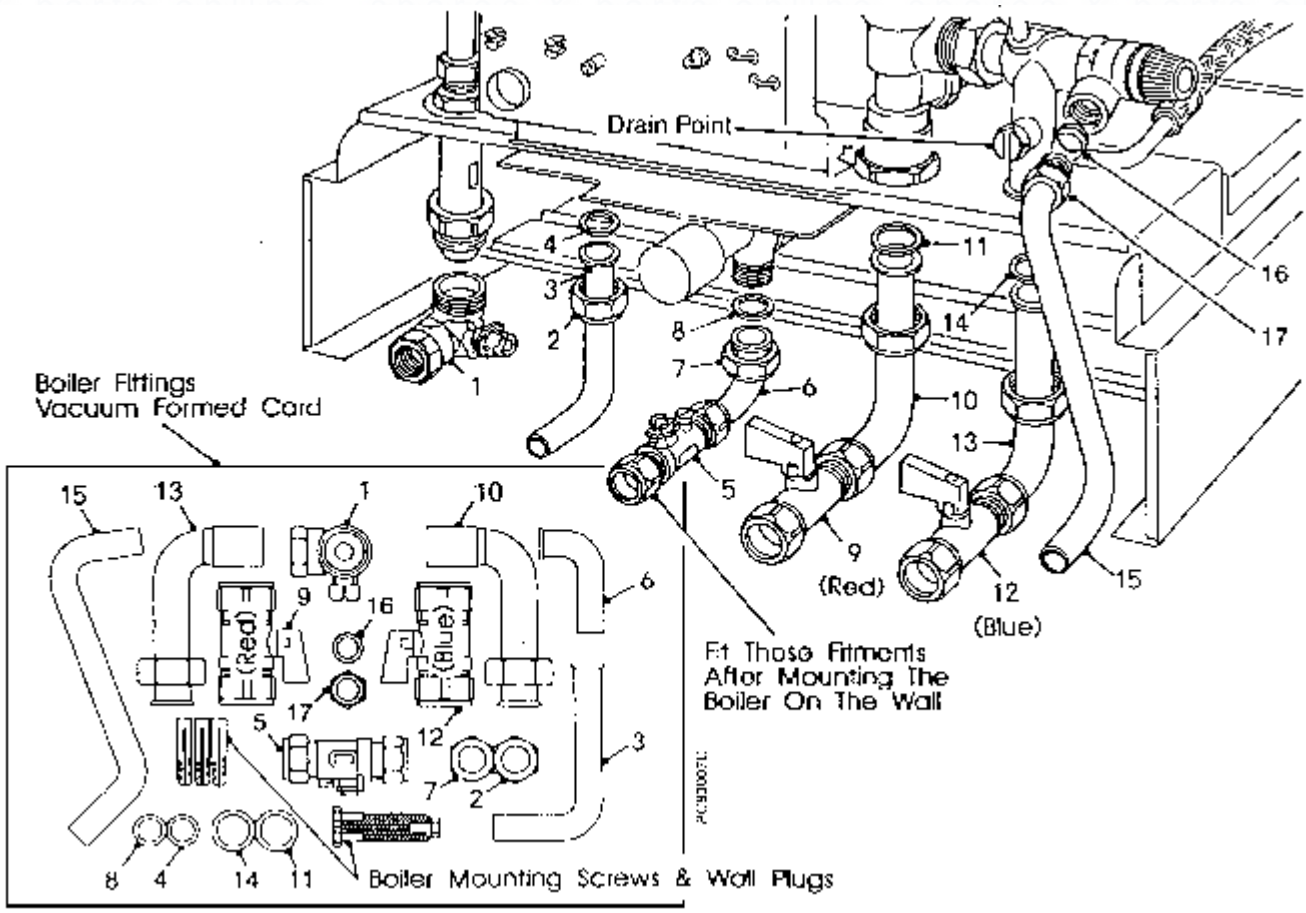

Fig. 9

2.6 Wiring the Appliance

The wiring diagram is located on the inside of the front casing panel.

1. Undo the single retaining screw on the top of the controls panel and allow the panel to swing down.
2. Using PVC insulated cable of not less than 0.75 mm². (24/0.2 mm to BS 6500 Table 16), wire up the panel referring to the termination label. (Fig. 10).

Note: Ensure cables pass through the bushes and are securely fixed by the cable clamps.

If a room thermostat is to be fitted, remove the Red link wire between terminals 3 and 4 and discard prior to wiring in the thermostat. If no room thermostat is to be fitted retain link wire.

If a programmable room thermostat is to be used it must be fitted in place of the external timer and the link between 3 & 4 retained.

If the installation does not have an internal or external timer the central heating switch on the front of the appliance must be set to Constant during periods when central heating is required.

If using an internal timer connect the timers lead to PL11 on the modulation control board - See Electrical Diagram, Page 41.

If an external frost thermostat is required it should be connected to terminals 3 and 8 on the boiler terminal block. For the frost thermostat to function the boiler switch must be set to 'On'.

Fig 10

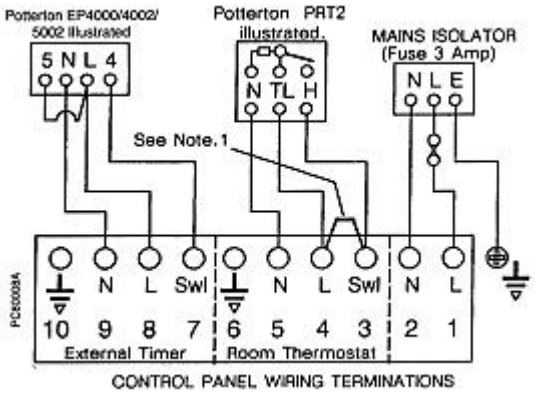

3. Check all wiring and reposition the control panel.
4. Secure with screw provided.

Note: The electrical mains supply must be fused at 3 A, and the connection must be made to the wiring panel in such a way that should the lead disengage from the cable clamp, the current carrying conductors become taut before the earth conductor.

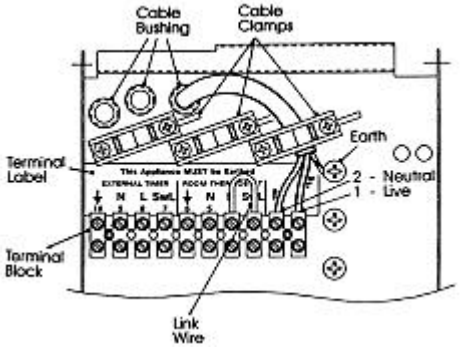

Notes:

1. If a Room Thermostat is to be fitted the link wire between 3 & 4 on the wiring panel must be removed.
2. If an External timer is not required, two internal timers are available.
3. If using an internal timer, connect it to plug 11 on the PCB. If a timer is not being installed, the central heating switch on the front of the appliance must be set to 'Constant' for the heating to operate.

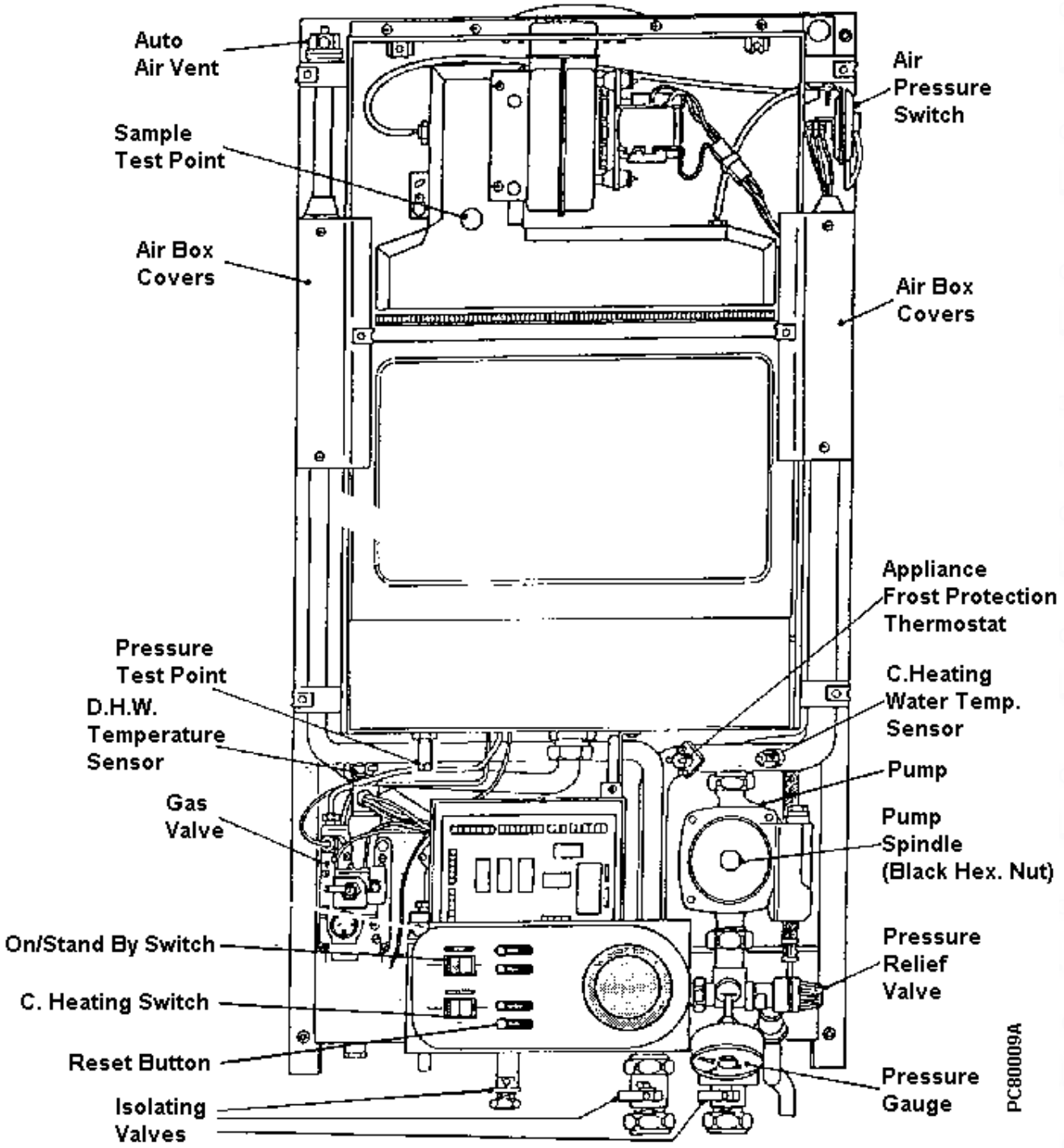

Fig. 11

3.1 Electrical Installation

Conduct a preliminary electrical test by checking: for short circuits, fuse failure, incorrect polarity, earth continuity and resistance to earth.

3.2 Gas Installation

The whole of the gas installation including the meter, should be inspected and tested for soundness and purged in accordance with the recommendations of BS 6891. Purging air from the gas line may be carried out by loosening the union on the gas service cock and purging. Re-tighten the union when completed and check for gas soundness.

N.B. Open all doors and windows, extinguish naked lights and DO NOT SMOKE when carrying out the gas soundness tests and purging.

3.3 Initial Lighting

WARNING:
Before operating the appliance, check that the air box covers are correctly fitted. The outer white front case should be left off for the time being.

WARNING:
When the appliance is operating, wiring in the area around the gas valve and printed circuit boards will be live. When it is necessary in the following sections to work in this area temporarily isolate the electrical supply. However this can not be done when adjusting the gas pressure therefore extra care must taken during this operation. Where it is necessary to disconnect a modulator coil wire disconnection should be made with the use of electrically insulated pliers and the connection should be taped.

IMPORTANT

The pressure relief valve is factory tested and does not need testing during the commissioning of the boiler.

It must not be used to reduce system pressure as it may cause debris in the system to foul the valve

Carry out the following procedure in the order listed.

1. Thoroughly flush out the whole of the heating system with cold water.

2. Fill and vent the system until the pressure gauge registers 1.5 bar (21.5 psi), examine for leaks and rectify. Do not overtighten joints. During filling ensure that the plastic screw on top of the automatic air vent is not tight and air can escape. **Do not tighten the air vent screw after filling.**

3. Release water from the system using an external drain tap until the minimum system design pressure is reached. (Generally 1.0 bar). To allow maximum central heating expansion capacity the pre-charge pressure in the central heating expansion vessel must be marginally greater than the initial (cold) system pressure at the appliance. If the position of the appliance in the system will cause the pressure at the appliance to be greater than 1 bar (14.5 lb/in) increase the pre-charge pressure in the central heating expansion vessel to a marginally greater value prior to filling the system.

   Set the red pressure gauge indicator to coincide with this pressure, grip and turn the outer casing of the gauge clockwise.

   Check the pump spindle is free to rotate by unscrewing the black octagonal nut, withdraw to engage the motor spindle. The knob should rotate freely. The pump will normally self vent the air from the rotor chamber within a short while of switching on, however should manual venting of the bearings be required, sideways pressure should be applied and maintained to the knob until a small amount of water becomes visible. The manual restart knob should now be screwed back to its original position, finger tight.

4. Check that the boiler switch is set to Stand-by and the central heating switch is set to the Off position. (Mid position)

5. Check the Gas service cock is On.

6. Check that the boiler isolating valves and radiator valves are open.

7. Check that any time controls are in an On condition, and any room thermostats are calling for heat.

8. Switch On the main electricity supply to the combination boiler at the wall isolating switch. The Mains light will now illuminate.

9. Loosen or remove the outlet (burner) pressure test point screw in the gas valve body (Fig. 18), and connect via a flexible tube to the + or Hi side of pressure gauge. Then connect the - or Lo side of pressure gauge via another flexible tube to the pressure test point in the base of the inner casing. (Fig. 11)

10. Switch the Boiler switch to On.

IMPORTANT

Commission the boiler in Central Heating Mode before Domestic Hot Water Mode but do not isolate the D.H.W.

11. Adjusting the Central Heating Range Rate Pressure.

    This pressure can only be measured in the central heating mode.
    i. Ensure all D.H.W outlets are turned off.
    ii. Ensure all radiator control valves are fully open and any room thermostats are calling for heat.
    iii. Set central heating switch to Constant. The burner will light but remain at low burner pressure for around 2 minutes, after which it will go to maximum pressure. Allow the central heating to run for 5 or 10 minutes.
    iv. Using the range rate adjustment knob on the electronic control board adjust to the values for Range Rate in Table 3.

12. Fully open a hot water tap. (After a short delay the main burner will light and the flame light will illuminate).

13. Turn off the hot tap.

WARNING: The pipes under the appliance could be hot, avoid contact with bare skin.

14. Fully open all domestic hot water outlets, vent flexible hose connections to the washing machine and dishwasher. Remove air from the domestic hot water distribution system. If this is not done the internal water flow switch will not function properly. Test for gas soundness around the gas components using leak detector fluid.

15. Check the minimum burner pressure (Table 3) by disconnecting one of the Modulating Coil electrical connections (wire colours Red or Black).

    Note: The modulating coil connections are 24V only. Fig. 18.

16. Reconnect and check maximum burner pressure against Table 3. If any adjustment is necessary see Section 3.4, 'Gas Pressure Adjustment'.

    Note: The boiler is so designed that if required the central heating output can be down rated to the lowest setting stated on the data plate without affecting the D.H.W output. If adjustment is required see Section 3.4 'Gas Pressure Adjustment'.

3.4 Gas Pressure Adjustment

Note: The gas pressures are set at the factory (with central heating output set at maximum) and should not require further adjustment. If gas pressure readings are being obtained which differ from that stated in Table 3, check the inlet pressure using the inlet pressure test point on the gas valve (Fig. 18). The inlet pressure should be checked with the appliance at full gas rate, to ensure this occurs put a high water flow through the domestic hot water side of the system.

Note: Full rate will be achieved with cold water supply temperatures below 15 °C.

Note: When checking gas inlet pressure only connect one tube from the measuring manometer's +ve side (positive). Do not connect the -ve (negative) tube as with minimum and maximum pressure readings.

Adjustment of the Modulating Valve

Pressures are measured by connecting the +ve connection to the gas outlet and -ve connection to the base of the inner casing as described in Section 3.3 . Set the pressures to the values in Table 3 by adjusting the gas valve in the following manner.

Note: It is important to note the order in which the maximum and minimum pressures are set.

The maximum pressure must always be set before adjustment of the minimum pressure.

Adjusting the Maximum Pressure - Fig. 12.

i. Cut off cable tie retaining modulator Cover.
ii. Remove Cover (C) by twisting it anticlockwise 90° and levering off with a small screwdriver.
iii. With a 10 mm spanner turn nut (B), (Clockwise to increase pressure). Adjust to the value for maximum pressure stated in Table 3.

Adjusting the Minimum Pressure - Fig. 12.

This adjustment is only to be made after the maximum setting has been completed.

i. Disconnect one of the electrical connections of the modulating coil and tape. (24V only)
ii. Using a 10 mm spanner hold nut (B) and adjust screw (A) with a screwdriver (clockwise rotation will increase the pressure). Set to the value for minimum pressure stated in Table 3.
iii. Reconnect the electrical connection to the modulator.
iv. Check maximum and minimum settings. Repeat adjustment if required.
v. Refit cover (C), snap into place and turn.

After the setting operation remove the pressure gauge tubes from the gas valve body and inner casing. Refit the pressure test point screws.

3.5 Products Of Combustion Measurement

The combustion performance can be assessed by placing a suitable sampling probe through the access hole in the inner casing door whilst the appliance is running. Typical figures based on a 500 mm flue length with the boiler operating at maximum output are:-

CO. 0.002 - 0.005%
CO_2 4.5 - 5.0%

Re-fit the screw in access hole after test.

	Setting Pressure	Tolerance	Gas Rate
Maximum Pressure	15.0 mbar	15.2 mbar 14.8 mbar	2.79 m³/hr 98.1 ft³/hr
Range Rate	8.3 mbar	8.4 mbar 8.2 mbar	2.10 m³/hr 73.7 ft³/hr
Minimum (Ignition) Pressure	3.5 mbar	3.6 mbar 3.4 mbar	1.34 m³/hr 47.1ft³/hr
Inlet Pressure 20 mbar (8" w.g.)			

Table 3. Gas Pressures

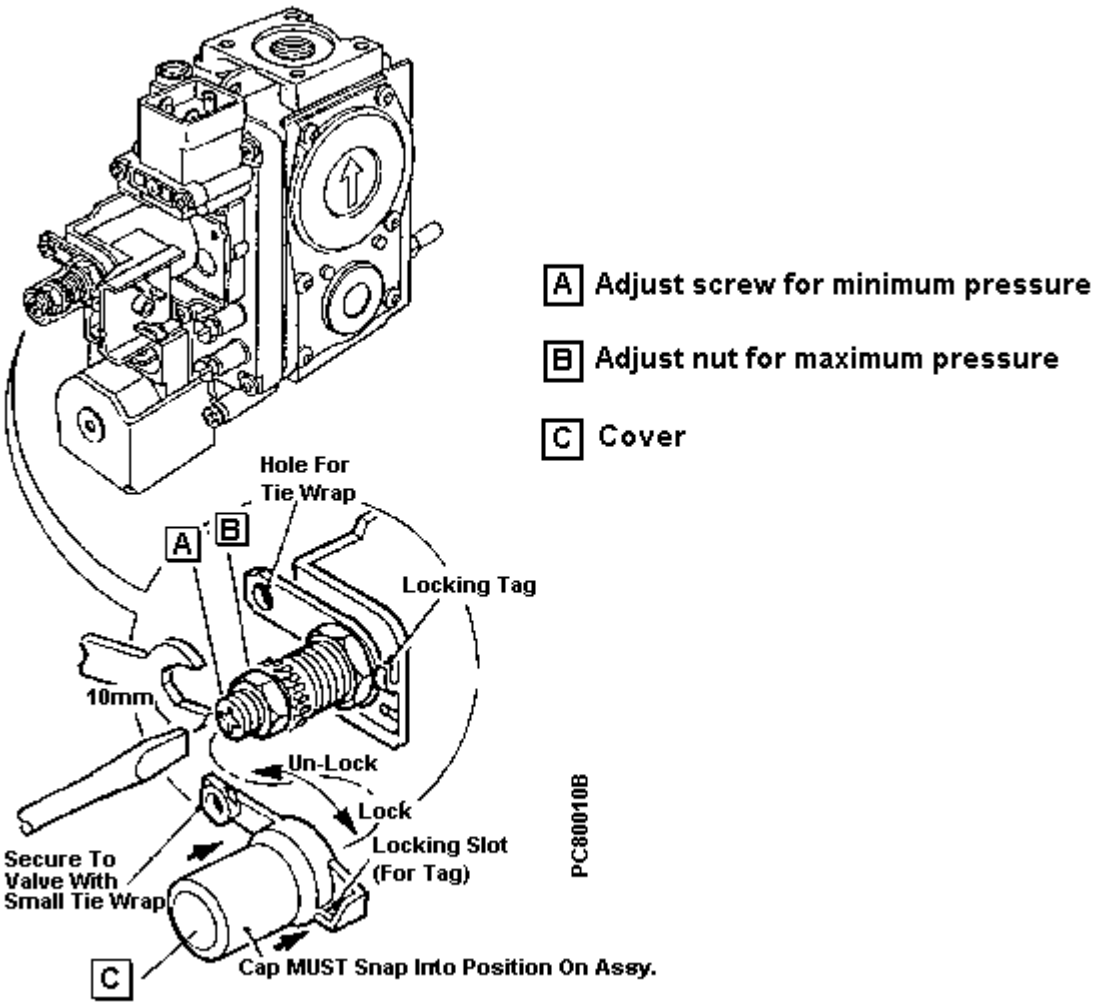

Fig. 12

3.6 D.H.W Flow Rate

The appliance contains an automatic flow regulator supplying a nominal flow rate of 7.6 litres/minute. This flow rate will give a nominal temperature rise of 45°C.

3.7 Central Heating

1. Ensure that all external controls such as a timers are switched On and that room thermostat/s are calling for heat.

2. Set the Central Heating switch to Timed (if system fitted with Timer) or Constant. The appliance will control the flow temperature between 79 °C & 87 °C dependent on system load.

3.8 Appliance Protection Devices

- Loss of gas supply, flame failure, or over-heating of the central heating water will cause the appliance to shut down or Lockout. This will be indicated by the lockout light being illuminated. To Reset the appliance press the RESET button on the front panel and hold in that position for 10 seconds and release. The appliance should now operate normally.

  If this is not the case refer to the Fault Finding guide either on the rear of the white front case or in these instructions.

- If the central heating system loses pressure for any reason the system and the appliance should be checked for leaks (including discharge from the pressure relief pipe). Correct any faults and re-pressurise the system with reference to Section 1.6. Mains Water Feed Central Heating.

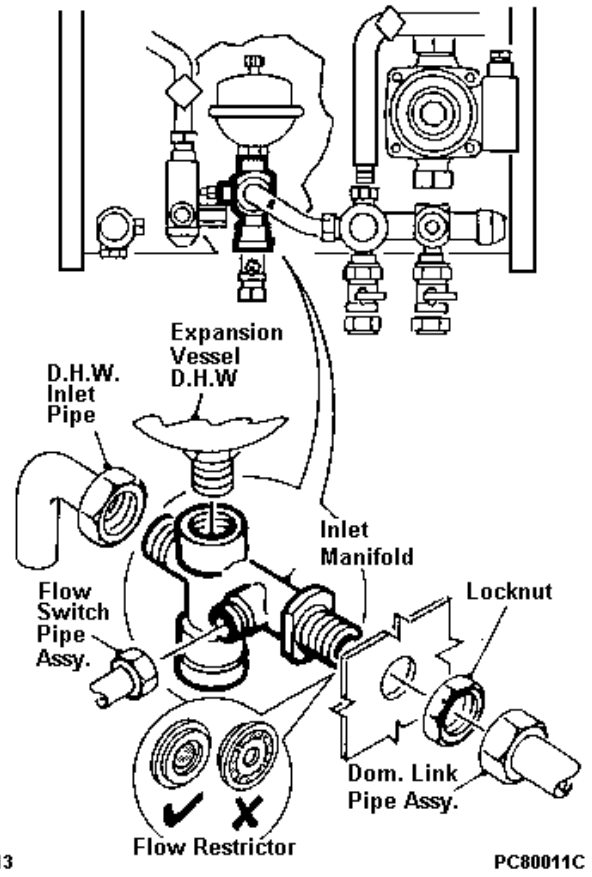

Fig. 13

- A Frost thermostat is fitted which will bring the appliance on when the local temperature around the appliance falls below 5 °C The appliance will shut down when the temperature of the system water has been raised by approximately 10 °C

- The appliance is protected provided the mains light is illuminated and the boiler switch is set to On, irrespective of the settings of any external controls.

  Note: the Frost thermostat will operate with the central heating switch in any position therefore when leaving the property in cold weather for extended periods, the boiler will be protected even when the switch is set to Off (Mid position).

  Note: While the appliance is being used to provide hot water at any draw off point, the central heating will not operate. When hot water is no longer required the appliance will automatically revert to central heating.

3.9 Complete the Installation

- After completion of installation and commissioning of the system re-fit the white front case.

- The installer should hand over to the User by the following actions:

1. Explain to the Householder where to find the User's Guide and his/her responsibilities under the 'Gas Safety (Installation and Use) Regulations 1994. (As Amended)'.

2. Explain and demonstrate the lighting and shutting down procedures.

3. Demonstrate the operation of the boiler including the use and adjustment of all system controls. This then ensures the greatest possible fuel economy consistent with household requirements of both heating and hot water consumption. Advise the User of the precautions necessary to prevent damage to the system, and to the building, in the event of the system remaining inoperative during frost conditions.

4. Explain the function and the use of the boiler switch, central heating switch and Reset button.

5. Explain and demonstrate the function of time and temperature controls, external frost thermostat (if fitted) and radiator valves, etc. for the economic use of the system.

6. If a Time Control is fitted (internal or external), then draw attention to the timer 'User Instructions' and hand them to the householder.

7. Stress the importance of regular servicing by a qualified Heating Engineer and that a comprehensive service should be carried out AT LEAST ONCE A YEAR.

8. An internal frost thermostat is fitted to the appliance, it must be explained that the Boiler switch must be in the On position (with the mains light illuminated) to provide protection of the appliance, if it is not to be used during winter periods.

Note: the Frost thermostat will operate with the central heating switch in any position therefore when leaving the property in cold weather for extended periods, the boiler will be protected even when the switch is set to Off (Mid position).

4. Servicing & Routine Maintenance - Page 21

- To ensure the continued safe and efficient operation of the appliance it is recommended that it is checked and serviced as necessary at regular intervals.

  The frequency of servicing will depend upon the particular installation conditions and usage but in general, once per year should be adequate. It is the law that all servicing work is carried out by competent persons such as CORGI registered personnel.

- **WARNING**: Before the start of any maintenance work, disconnect the mains electricity supply to the appliance by removing the plug from the socket or by switching off at the external isolating switch. The gas distribution pipework and all associated appliances (including the boiler) must be checked for gas soundness. The appliance gas supply should be isolated at the gas service cock, (one quarter turn of square spindle) if dismantling gas carrying components.

- The following notes apply to the appliance but it should be remembered that attention must also be paid to the heating and hot water systems in the property with special attention to radiator valves, thermostats, clocks, leaking hot water taps etc.

  Where it is necessary to replace a gasket that relies on adhesive for securing - this adhesive will be supplied with the gasket in the spares kit.

  Prior to servicing, Remove the white front case (see Section 4.1 on Page 22). Operate the appliance by turning On a hot water tap to a high water flow and observe the main burner.

  Look through the sight glass and check that the flame covers all the flame ports and is of a light blue colour. Yellow flames and excessive lifting of flames indicate poor combustion.

- It is preferable to measure the CO% and CO2% content of the flue products. This is achieved by placing a suitable sampling probe into the fluehood via the sample test point on the air box door.

  Typical figures based on a 500mm flue length with the boiler operating at maximum output are:-

CO	0.002 - 0.005%
CO_2	4.5 - 5.0 %

- **IMPORTANT:** After completing any servicing or replacement of a gas carrying component, it is essential that a test for gas soundness is made and functional checks of controls operation carried out.

4.1 Remove the White Front Case

1. Remove the two securing screws located at the base of the white front case assembly.

2. Ease the base of the case forward approximately 50mm and lift to release the panel from the securing hooks at the top of the appliance.

3. Remove the case and place in a safe position away from the immediate working area.

4.2 Remove Base Panel

1. Remove the two securing screws retaining the base panel to the case sides.
2. Lower the front edge and push backwards to release cover

4.3 Remove the Air Box Covers

1. Take out the six securing screws and remove the main air box cover.

2. Remove the two screws securing the front edge of each white case side panels. This will allow the side panels to be sprung outwards to improve access for the following operation.

3. Remove the four screws securing the two remaining air box side covers and remove.

4.4 Remove the Fan Assembly

1. Disconnect the fan wiring by separating the in-line connector.

2. Support the fan and remove the two fixing screws from the front edge of the fan mounting plate. Lower the fan and carefully withdraw it from the appliance. Put in a safe place until required.

4.5 Remove the Flue Hood

1. Remove the two flexible tubes connected to the left and right hand sides of the fluehood.

2. Slacken the screw on the left-hand rear of the flue hood (but do not remove) and fully remove the remaining right hand screw.

3. Lift and remove the fluehood to expose the top surface of the heat exchanger.

4.6 Remove the Combustion Chamber Front Panel

1. Remove the two screws securing the combustion chamber front panel.

2. Remove the panel by pulling the top edge forwards and lifting the panel clear of the two lower retaining flanges. Ensure the insulation remains in position. The underside of the heat exchanger is now exposed.

4.7 To Inspect and Clean the Boiler - Fig. 14

1. Inspect the heat exchanger for any blockage. Deposits of any material should be brushed away using a soft brush.
   Note: Do not use brushes with metallic bristles.

2. Examine internal pipe work connections and automatic air vent for any water leaks. Rectify if necessary.

3. Examine the combustion chamber insulating material and renew if damaged. To remove the combustion chamber side panels undo the single screw from each side and pull panel forward. The insulation can now be removed from the panel. To remove the insulation from the rear of the combustion chamber remove the two hexagonal burner location supports and take out the two screws from the insulation support bracket.
   Remove the support and slide the insulation downwards from behind the heat exchanger.

4. Inspect the main burner and remove any deposits with a soft brush.

   Check the electrodes for damage or deterioration. Ensure that the spark gaps are correct to dimensions specified in Fig. 14. Clean or renew as necessary. Do not bend the electrodes as the insulating material may crack.

5. Examine the fan for any mechanical damage (including seals), check to ensure free running of the fan wheel. Clean the wheel if necessary with a soft brush.

   Note: It is essential that a good seal is made at the fan, renew the sealing collar or fluehood sealing ring if there are any signs of damage or deterioration.

6. Examine flue ducts and flue hood and ensure that there is no obstruction. Re-assemble all components in reverse order, (ensure all seals are replaced correctly). See note above re-spare main burner seals.

   During re-assembly check the air box door and side cover seals for damage or deterioration and renew if necessary.

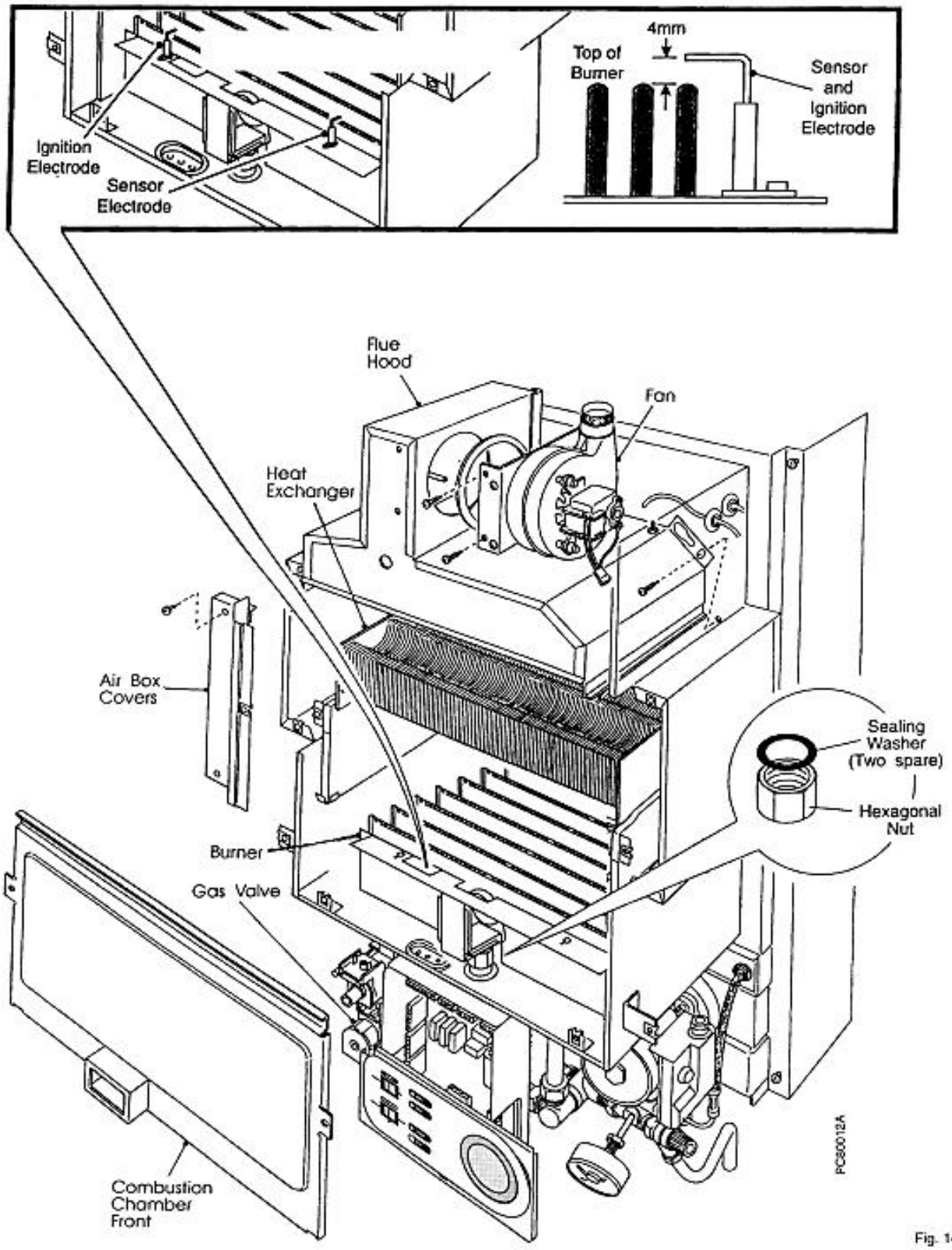
4mm
Top of Burner
Sensor and Ignition Electrode
Ignition Electrode
Sensor Electrode
Flue Hood
Fan
Heat Exchanger
Air Box Covers
Sealing Washer (Two spare)
Hexagonal Nut
Burner
Gas Valve
Combustion Chamber Front
PC80012A

Fig. 14

4.8 Remove the Burner - Fig. 15

1. Disconnect the two leads to the electrodes. (Do not pull on the cable).

2. Undo the hexagonal union nut under the burner, taking care not to lose the seal *. Carefully pull the burner forward approximately 3 mm to disengage the rear burner supports, then lift the rear of the burner to an angle greater than 45°. Continue to roll the burner out of the appliance.

3. Remove the burner injectors separately to examine their status, clean or renew as necessary.

   * If, during removal of the burner the burner sealing washer becomes damaged, the appliance is supplied as standard with two spare sealing washers. They are in a polythene bag located on the inside face of the base panel. Further washers can be purchased from Potterton, Part No.13-18693. If the boiler has been operating, care must be taken to avoid contact with any hot pipework on the underside of the appliance, during inspection and cleaning.

4.9 Gas Pressures - Adjustment

See Section 3 'Commissioning'.

4.10 The Central Heating Sealed System

1. Check that the pressure in the system is being maintained. The red indicator will have been set (outer case of gauge turns clockwise) to show the system pressure. If the black indicator shows a lower pressure than the red indicator, the system has lost pressure and should be re-pressurised. The correct procedures are shown in the installation section. See 'permissible methods of filling' Page 11.

4.11 Other Components

No further servicing is required on any other appliance components.

It may occasionally be necessary to replenish the pre-charge in the expansion vessel. This can be readily achieved by use of a portable air pump.

Note: The water side of either expansion vessel must be depressurised prior to re-pressurising the air side.

Access can be made to the charging point on the vessels, as follows:

1. Central heating expansion vessel - access is made to the vessel charging point from above on the right hand side of the appliance. Re-pressurise to a minimum of 1 bar (14.5 lb/in) or marginally greater than the designed system pressure at the appliance when cold, which ever is higher.

2. Domestic hot water expansion vessel - access is made by lowering the controls panel and removing the access cover on the rear panel, also temporarily remove the transformer. The vessel charge point can now be connected. Re-pressurise the vessel to 3.5 bar (51 p.s.i) or higher if mains water pressure is higher.

   Note: If the portable pump can not easily be connected, the vessel can be removed and re-pressurised off the appliance.

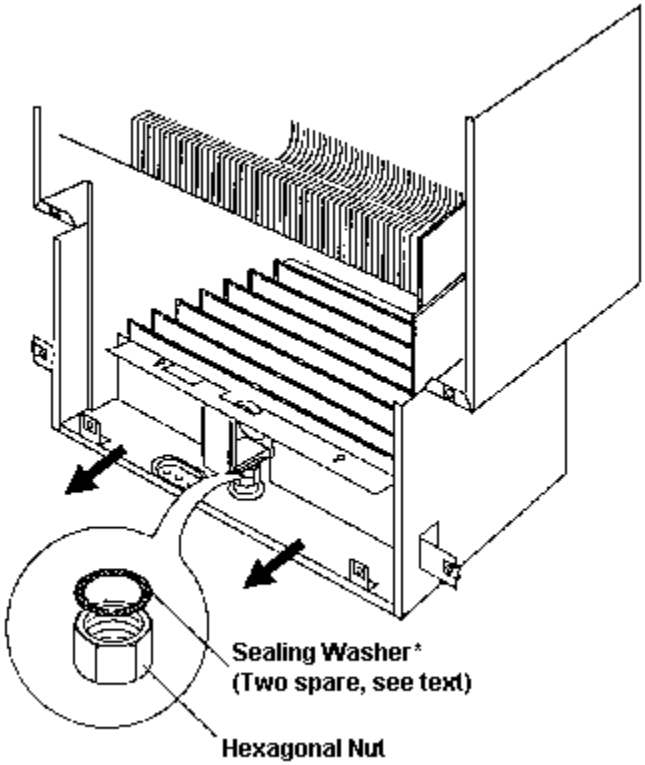
Sealing Washer*
(Two spare, see text)
Hexagonal Nut

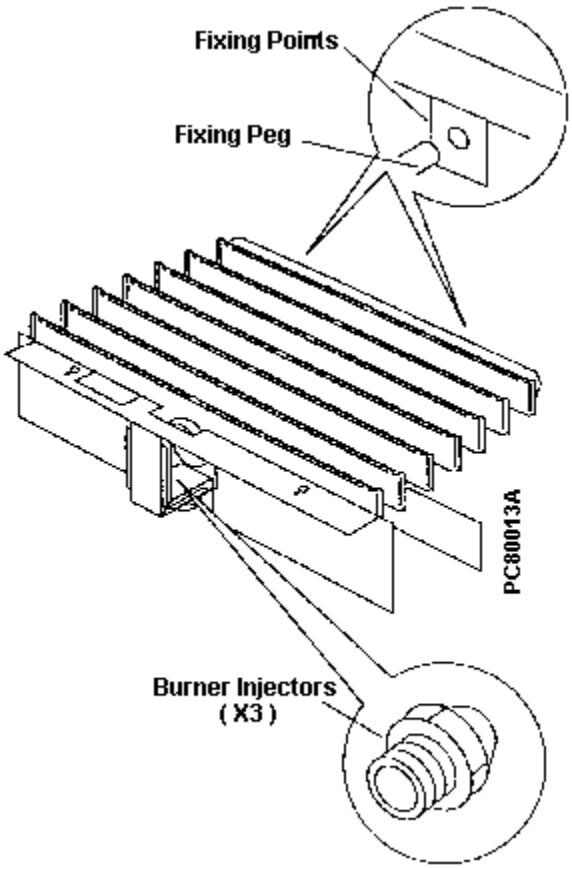
Fixing Points
Fixing Peg
PC80013A
Burner Injectors
(X3)

Fig 15

5. Replacement of Parts - Page 26

WARNING: Before attempting to remove any component from this appliance, first disconnect the mains electricity supply by removing the plug from the wall socket or by switching off the appliance at the external isolating switch. Note: The appliance stand-by switch must not be used as the means of isolating, as this switch does leave parts of the appliance electrically live.

IMPORTANT: After removal or replacement of any gas carrying components a test for gas soundness must be made.

Isolate the Gas The supply should be isolated at the boiler gas service cock (one quarter turn of square spindle).

Isolate/Drain the Water When draining and removing water carrying components ensure that the control box is suitably protected from accidental damage.

Central Heating: Reduce system pressure at an external drain tap then close the isolating valves at the boiler. Remove the drain screw from under the pump manifold and drain the system into a suitable recepticle.

Domestic Hot Water: Close the isolating valves at the boiler and open the hot water taps to reduce the water pressure in the boiler. Remove the drain screw in the cold water isolating valve and drain into a suitable recepticle.

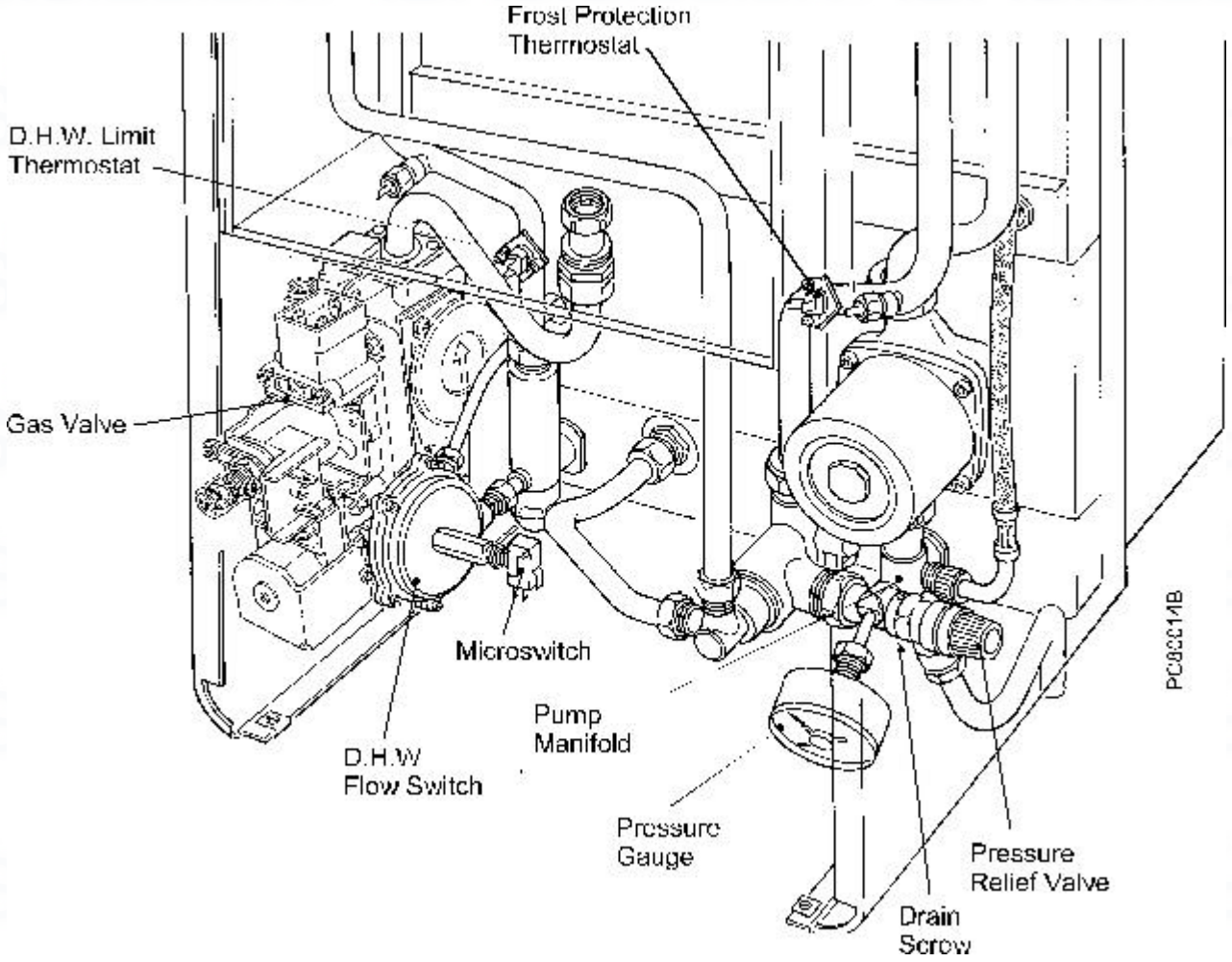

5.1 Central Heating Overheat Thermostat
Fig. 17

1. Remove the white front case and three air box covers. See 4.1 & 4.3 in 'Routine Maintenance'.

2. The thermostat is located on the outlet tail on the right hand side of the heat exchanger. Disconnect the two electrical leads.

3. Undo the two long fixing nuts and remove the thermostat from the heat exchanger.

4. Fit the new overheat thermostat taking care not to touch the exposed disc on the thermostat face. Do Not use heat sink compound. Re-assemble in reverse order.

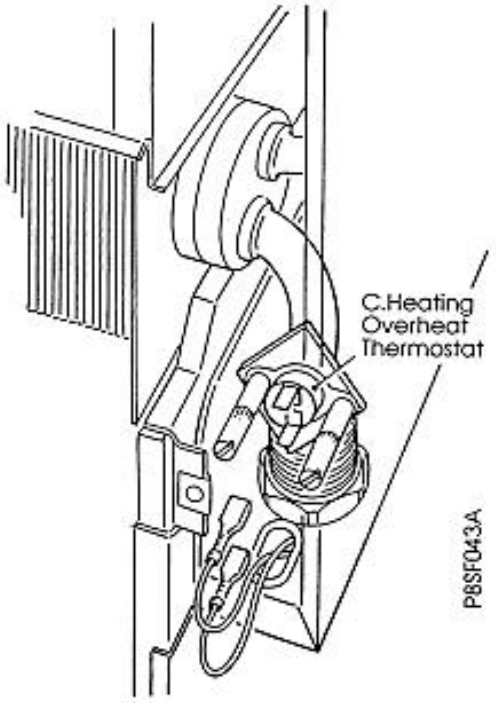

Fig. 17

5.2 Domestic Hot Water Limit & Frost Thermostats

1. Remove the white front case and base panel. See 4.1 & 4.2 in 'Routine Maintenance'. Lower the control panel, (one screw).

2. Disconnect the electrical leads from the thermostat.

3. Remove the two securing screws and pull the thermostat clear of the pipe.

4. Fit the new thermostat and re-assemble in reverse order.

5.3 Sensor and Ignition Electrode

1. Remove the white front case, base panel, air box covers and combustion chamber front panel. See 4.1 to 4.3 & 4.6 in 'Routine Maintenance'.

2. Disconnect the lead from the base of the electrode to be changed.
Remove the electrode retaining screw and remove the electrode from the burner.

3. Fit new electrode and re-assemble in reverse order, checking the gap measures 4mm ± 0.5mm (Fig. 14).

5.4 Sensor and Ignition Leads

1. Remove the white front case, base panel and main air box cover. See 4.1 to 4.3 in 'Routine Maintenance'.

2. Lower control panel (one screw)

3. Note run of lead.
Remove lead ends from electrode and Full Sequence Control Board. Pass lead through the silicone grommet.

4. Fit new lead in correct position.

5. Re-assemble in reverse order. Ensure the silicone grommet is correctly fitted and not damaged. Replace if necessary.

5.5 Burner - Fig. 15

1. Remove the white front case, air box covers, combustion chamber, front panel and burner assembly. See 4.1, 4.3, 4.6 & 4.8 in 'Routine Maintenance'.

2. Remove the electrodes from the main burner and re-assemble onto the new main burner, check electrode gap is 4mm ± 0.5 Fig. 14).

3. Re-assemble in reverse order.

5.6 Injectors - Fig. 15

1. Remove the white front case and main air box cover. See 4.1 and 4.3 in 'Routine Maintenance'.

2. Replace the relevant injector/s.

3. Re-assemble in reverse order.

5.7 Gas Valve - Fig. 18

1. Remove the white front case, base panel & white left hand side panel.
   See 4.1, 4.2 & 4.3 in ’Routine Maintenance’.
2. Isolate the gas supply at the gas cock (1/4 turn).
3. Remove the electrical connectors from the modulating valve, the plug from the first solenoid valve and gas valve compensation tube.
4. Undo the nut on the lower gas supply tube.
5. Support the gas valve assembly and undo the nut on the burner supply pipe under the air box. Remove the gas valve assembly from the appliance.
6. Remove the second solenoid valve (2 screws).
7. Remove the screw and disconnect the electrical connector to the second solenoid valve and remove the rubber gasket.
8. Before the new gas control valve is fitted, fit the rubber gasket to the second solenoid valve and secure the electrical connector to the second solenoid valve (1 screw), transfer the burner feed pipe and lower gas supply tube to the new valve. Replace the 'O' rings if necessary.
9. Re-assemble in reverse order ensuring that the black and red wires (low voltage) are connected to the modulator valve, polarity is not important.

5.8 Modulating Valve

1. Remove the white front case.
   See 4.1 in ’Routine Maintenance’.
2. Disconnect the electrical connections to the modulating valve. (Red and Black).
3. Remove the clear plastic cover by cutting off the nylon tie, twisting the cover anti-clockwise 90° and levering off with a small screwdriver.
4. Using a 14 mm spanner unscrew the complete inner cartridge and remove with niting plate.
5. Lift off the solenoid coil and remove from metal bracket,
6. Replace in reverse order ensuring the notch in the niting plate is located over the raised pip on the new solenoid coil.
7. Reconnect the red and black wires to the terminations on the modulation coil. Polarity is not important.
8. Reset the gas pressure - see Section 3 'Commissioning'.
9. Refit the clear plastic cover, snap into place and turn.

5.9 First Solenoid Valve Coil - Fig. 18

1. Remove the white front case.
   See 4.1 in 'Routine Maintenance'.
2. Disconnect the electrical connecter to the first solenoid valve.
3. Remove the first solenoid valve (2 screws).
4. Replace the solenoid valve in reverse order.
5. Re-commission the appliance as described in Section 3.

5.10 Second Solenoid Valve

1. Remove the white front case.
   See 4.1 in 'Routine Maintenance'.
2. Remove the second solenoid valve (2 screws).
3. Remove the screw and disconnect the electrical connecter to the second solenoid valve.
4. Transfer the rubber gasket to the new solenoid valve.
5. Replace the solenoid valve in reverse order.
6. Re-commission the appliance as described in Section 3.

5.11 Case Seals

1. Remove the white front case, base cover and air box covers.
   See 4.1, 4.2 & 4.3in ’Routine Maintenance’.
2. Peel off the existing case seal(s).
3. Fit new seal(s) and re-assemble, in reverse order.

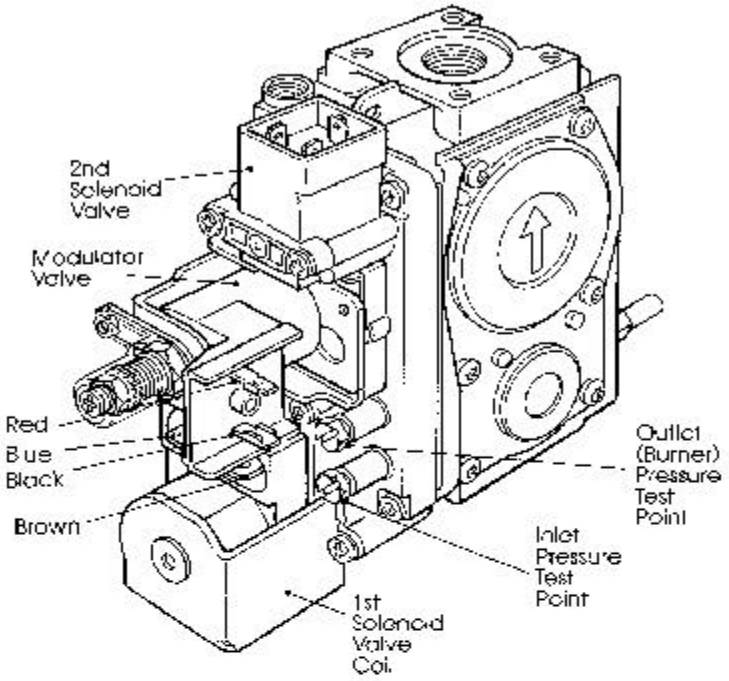
2nd
Solenoid
Valve
Modulator
Valve
Red
Blue
Black
Brown
Outlet
(Burner)
Pressure
Test
Point
Inlet
Pressure
Test
Point
1st
Solenoid
Valve
Coil

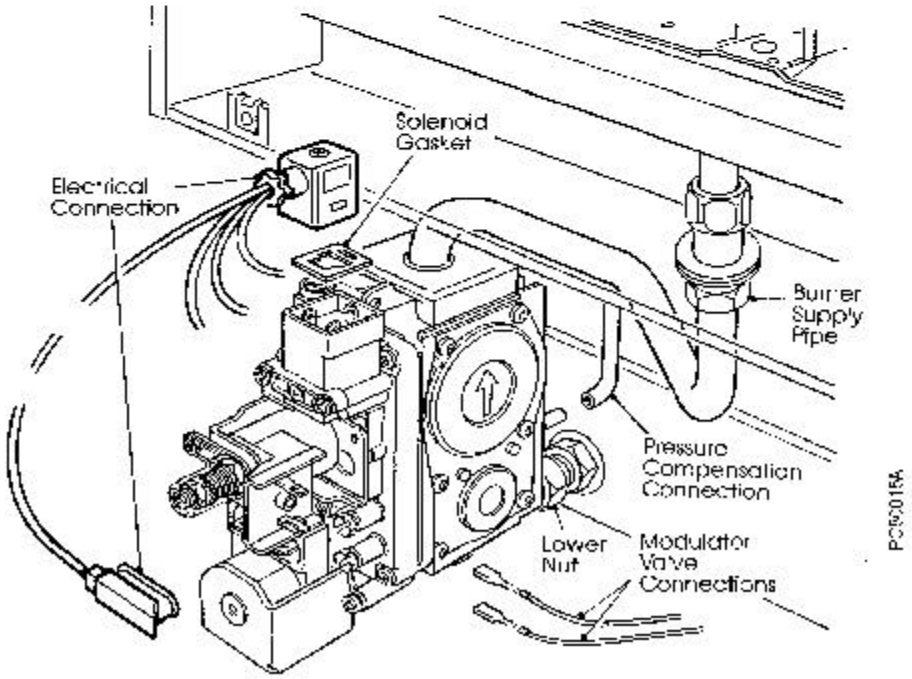
Solenoid
Gasket
Electrical
Connection
Burner
Supply
Pipe
Pressure
Compensation
Connection
Lower
Nut
Modulator
Valve
Connections
P050015A

Fig 19

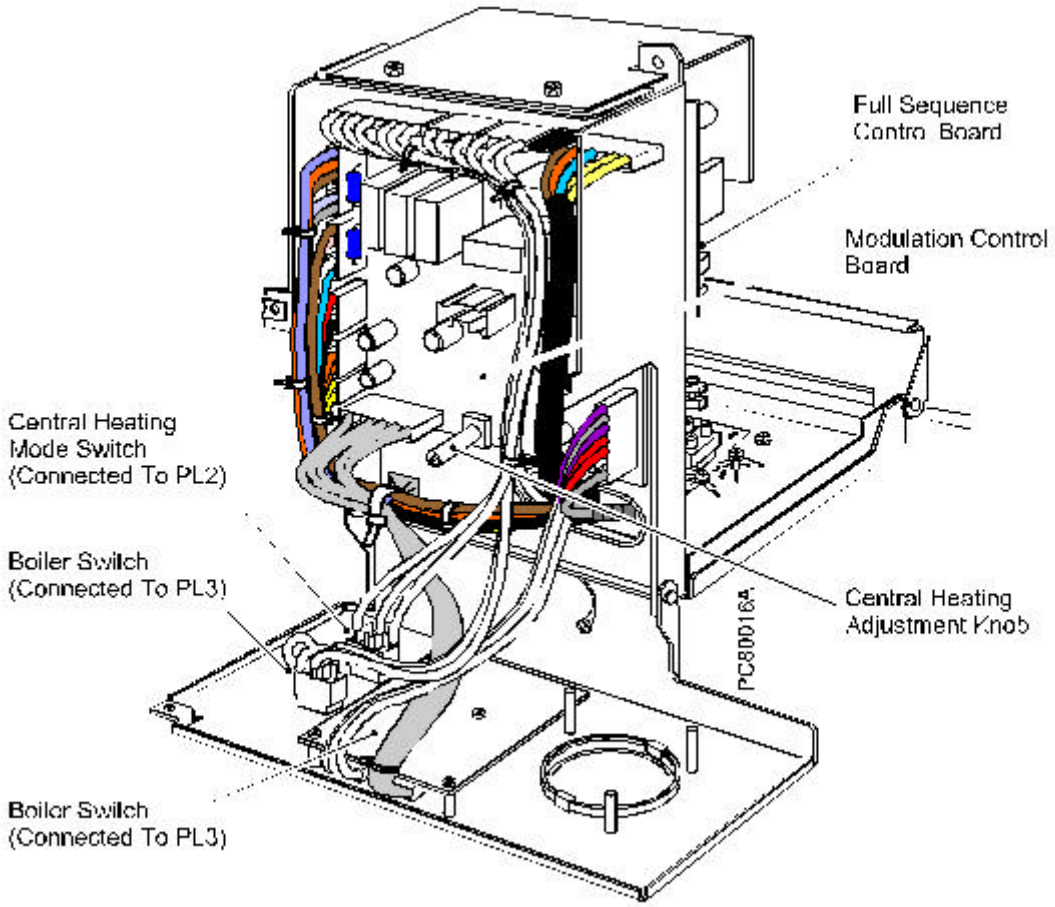

5.12 Central Heating and Boiler Switches

1. Remove the white front case and base panel.
   See 4.1 & 4.2 in 'Routine Maintenance'.
   Lower the facia panel, (1 screw).
2. Make note of the wire routing and switch orientation and disconnect the molex plug from the electronic control board.
3. Using a small screwdriver press the retaining lugs on the switch body sides inwards and remove the switch from the control panel. Withdraw the switch and leads and feed the molex plug through the cut out in the panel
4. Fit new switch assembly and re-assemble in reverse order. Ensure that the switch is the correct way round in the panel i.e. when the Stand-by/On switch is On, the red indicator line on the switch can be seen.
5. Re-fit the molex plug to the correct plug position on the electronic control board.

5.13 Control Boards

The electronic control assembly is in three parts:

- The User Display Board.
- The Control Board.
- The Full Sequence Control Board.

1. Remove the white front case and base panel.
   See 4.1 & 4.2 in 'Routine Maintenance'.

(i) USER DISPLAY BOARD

1. Undo the fixing screw retaining the facia panel and swing the panel downwards.
2. Remove the plug connector/s from the rear of the board and undo the four securing screws.
3. Replace board and re-assemble in reverse order.

(ii) MODULATION CONTROL BOARD

Note: The board has a replaceable fuse rated at 2A.

1. Undo the fixing screw retaining the facia panel and swing the panel downwards.
2. Remove the plug connectors on the larger control board and undo the four securing screws.
3. Replace the board and re-assemble in reverse order.
4. Reset the C.H. range rate - see Section 3.3.(11).

(iii) FULL SEQUENCE CONTROL BOARD

1. Undo the fixing screw retaining the control panel assembly (top right hand side of control box) and swing the control assembly downwards.
2. Remove the cover over the full sequence control (two screws).
3. Slide the electrode and flame sensors wire connections out of their respective slots on the board. Disconnect all plug connections and carefully remove the earth tab.
4. At each of the four standoff pillars, push the small barb inwards and lift the board free.
5. Replace the board and re-assemble in reverse order.

5.14 Air Pressure Switch - Fig. 11 & 20

1. Remove the white front case, base panel and white right hand side panel. See 4.1, 4.2 & 4.3 in 'Routine Maintenance'.
2. From the top right hand side of the boiler undo the securing screw retaining the pressure switch /bracket assembly
3. Lift the pressure switch / bracket assembly clear of the top of the boiler. Note positions and disconnect pressure tubes and electrical connectors.
4. Replace pressure switch and re-assemble in reverse order.

Note: The Red pressure tube must be connected to the High side of the switch, indicated by (H) and a Red Paint Spot. The electrical connections must be as follows.-

Orange	Common	(C)
Violet	Normally Closed	(NC)
Grey	Normally Open	(NO)

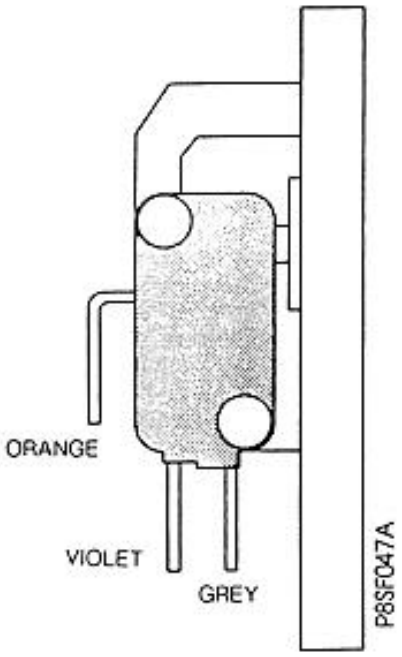

Fig. 20

5.15 Fan

1. Remove the fan. See 4.1, 4.2 & 4.3in 'Routine Maintenance'.
2. Transfer the fan outlet seal to the new fan and fit the fan into the appliance. Ensure a good seal is made between the fan inlet and the fluehood.
3. Re-assemble in reverse order. Ensure the seal is not trapped on the turned down edge.

5.16 Fan Seals

1. Remove the fan. See 4.1, 4.2, 4.3 & 4.4 in 'Routine Maintenance'.
2. Remove the fan outlet seal by sliding the seal off the fan. Remove the fan inlet seal by pulling the seal away from the fluehood and disconnecting the pop in locaters.
3. Fix the new seals in position.
4. Re-assemble in reverse order. Ensure the seal is not trapped on the turned down edge.

5.17 Temperature Sensor D.H.W. & C.H. - Fig. 11

1. Remove the white front case and base panel. See 4.1 & 4.2 in 'Routine Maintenance'.
2. For D.H.W sensor lower the control panel assembly by undoing the securing screw at the top right hand side of the control panel.
3. Before removing the hot water or central heating sensor, first close the isolating valves for the circuit involved and drain the appliance as described on Page 26.
4. Disconnect the electrical connection from the sensor(s) and unscrew from its housing.
5. Refit the new sensor(s) and 'O' Ring seal if required. Re-assemble in reverse order. If necessary (C.H. sensor only) re-charge the central heating system as described in Section 1.8 and check for leaks.

5.18 Pressure Gauge - Fig. 11

1. Remove the white front case and base panel. See 4.1 & 4.2 in 'Routine Maintenance'.
2. Drain the central heating circuit as described on Page 26.
3. Use a spanner to prevent the pressure gauge from rotating and undo the 1/4" BSP nut behind the pressure gauge and remove the gauge.
4. Fit the new pressure gauge and sealing washer. Re-assemble other parts in reverse order. Re-charge the central heating system as described in Section 1.8 and check for leaks.

5.19 Water Flow Switch (D.H.W.)

1. Remove the white front case and base panel. See 4.1 & 4.2in 'Routine Maintenance'.
2. Lower the control panel assembly by undoing the securing screw at the top right hand side of the control panel.
3. Close the 15mm cold water isolating valve, open the lowest hot water tap then remove the drain screw from the isolating valve to drain the system.
4. Note the position of the electrical connections and remove the two wires from the micro switch.
5. Undo the two nuts holding the flow switch in place and remove the pressure switch.
6. Transfer the micro switch assembly by loosening the locknut and unscrew the switch, refit the micro switch to the new flow switch and position the switch as dimensioned in Fig. 21.
7. Re-assemble in reverse order. Ensure the wires are connected correctly as shown in Fig. 21.

5.20 Microswitch (D.H.W FLOW SWITCH)

1. Remove the white front case and base panel. See 4.1 & 4.2 in 'Routine Maintenance'.
2. Lower the control panel assembly by undoing the securing screw at the top right hand of the control panel.
3. Note the position of the electrical connections and remove the two wires from the micro switch.
4. Loosen the locknut and remove the switch, fit the new micro switch (with locknut) to the flow switch and position the switch as dimensioned in Fig. 21.
5. Re-assemble in reverse order. Ensure the wires are connected correctly as shown in Fig. 21.

5.21 Pump - Fig. 16

For ease of replacement it is advisable to fit a new motor (head) assembly to the existing pump housing. This will prevent excess dismantling and save time as the motor assembly may well need to be removed from the new pump to correctly position the electrical control box.

1. Remove the white front case and base panel. See 4.1 & 4.2in 'Routine Maintenance'.
2. Lower the control panel assembly by undoing the securing screw at the top right hand side of the control panel.
3. Unplug the pump wiring at the in-line connector.
4. Drain the central heating circuit as described on Page 26.
5. Remove the motor head assembly from the pump body by removing the four retaining screws.
6. Transfer the wiring harness from the old pump to the new, note the following wiring terminations.

Live (L)	Pink
Neutral (N)	White
Earth	Green/Yellow

7. Fit the new pump head assembly using the new sealing ring, ensure that the pump terminal block is to the right hand side with the wires running out of the top. Secure tightly and re-assemble in reverse order.
   Re-charge the system as described in Section 1.8 and check for leaks. When applicable, ensure that the pump is set to the highest speed.

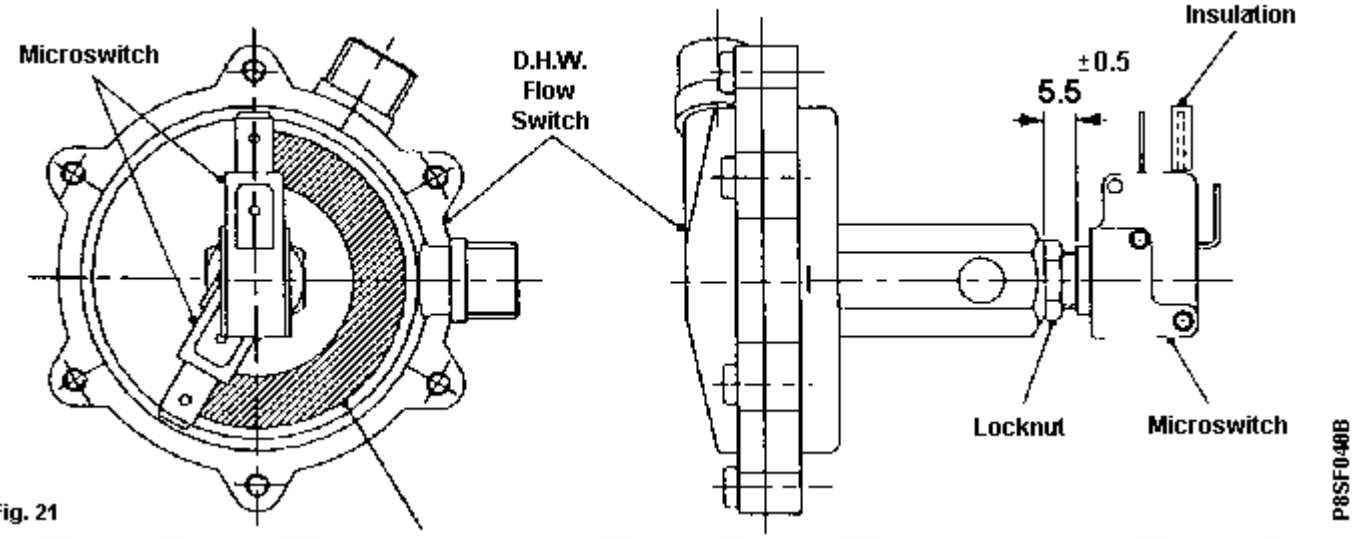

Fig. 21

The Microswitch Position Should Be Limited To The Shaded Area. (When Adjusting To Obtain The 5.5mm Gap).

NOTE: "The Dimension of 5.5mm will give an approximate initial setting. The final setting is made by checking the water flow rate at which the switch turns OFF, when the boiler is hot. Run the D.H.W. with the boiler in 'Summer' mode, until the water is hot. Gradually decrease the water flow rate until the flow switch turns OFF. The water flow rate, just before the switch turns OFF, should be between 3 & 3½ litres, this will take between 9 and 11 seconds to fill a pint bottle. If the switch turn OFF at an incorrect rate, adjust the position of the microswitch. It may be necessary to move the microswitch by a complete turn, but always keep it in the shaded area".

5.22 Diverter Valve - Fig. 22

The diverter valve is made up in two parts. The wax capsule head forms one part and provides the motive power to open the valve. The second part, the valve consists of the change over mechanism and the valve seating. It is likely that only replacement of the head will be necessary, if the complete valve requires replacement proceed to (ii).

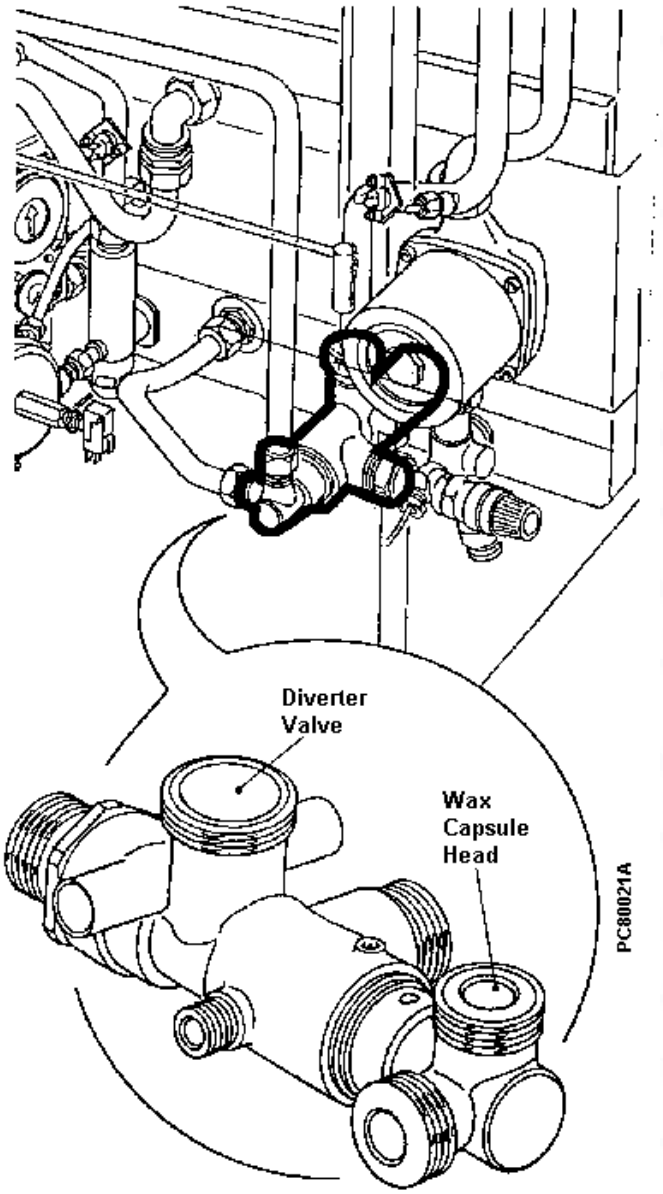

(i) Wax Capsule Head

1. Remove the white front case and base panel. See 4.1 & 4.2in 'Routine Maintenance'.
2. Lower the control panel assembly by undoing the securing screw at the top right hand side of the control panel.
3. Close the 15mm cold water isolating valve, open the lowest hot water tap and remove the D.H.W drain screw in the isolating valve to drain the system.
4. Drain the central heating circuit as described on Page 26.
5. Undo the two D.H.W pipe connections to the valve head. Retain the two pipe seals.
6. Unscrew the two grub screws (2 mm hexagon key) which hold the head to the main body. Pull the head forwards using a twisting action and carefully remove the head. Note the position of the loose brass cylinder on the wax capsule push rod and transfer onto new head assembly.
7. Fit new wax capsule head, re-assemble in reverse order. Replace pipe seals is necessary.

(ii). Complete valve replacement

1. Perform steps 1. to 5. in (i) above.
2. Undo the Central heating pipe connections to the diverter valve body and loosen the two nuts retaining the C.H. Flow and Return pipe tails.
3. Remove the locknut at the rear of the diverter valve holding the valve to the front cross brace.
4. Undo connection to the pump manifold and withdraw the diverter valve from the boiler.

5.23 Expansion Vessel C.H.

In the unlikely event of a failure of the C.H. expansion vessel it is recommended that a new vessel be fitted exterior to the boiler. It should be positioned on the C.H. Return pipe (see Fig. 6) as close to the boiler as possible. If however, the vessel must be replaced then the following procedures may by used. Installations with vertical flue systems must be fitted with exterior expansion vessels if the flue system can not easily be raised a minimum of 50mm.

Note: It will simplify fitment of the vessel if a length of string or flexible wire is attached to the end of the flexible pipe and passed down the rear of the appliance through the back panel hole and used as a guide to thread the pipe during installation.

Procedure 1. Horizontal flues only.

If the clearance above the boiler is **greater than 300 mm** proceed as follows:

1. Remove the white front case.
   See 4.1 in 'Routine Maintenance'.
2. Lower the control panel assembly by undoing the securing screw at the top right hand side of the control panel.
3. Drain the central heating circuit as described on Page 26.
4. Undo the flexible pipe connection on the side of the pump manifold and remove the grommet. Push the flexible pipe through the hole in the back panel.
5. For rear outlet flues remove the flue elbow (4 screws) and withdraw the complete flue assembly from the wall. Short side outlet flues may also require removal of the flue system.
6. Remove the top expansion vessel securing bracket assembly (four screws) and slide the vessel (complete with flexible pipe) upwards out of the appliance.
7. Remove the flexible pipe from the old vessel and refit (using a new sealing washer) to the new expansion vessel (at this stage the pre-charge pressure can be easily checked and corrected if necessary. The pressure should be at least equal to the system pressure at the appliance).
8. Fit the new expansion vessel and re-assemble in reverse order. Ensure that the vessel is located correctly in the lower support bracket. Route the flexible pipe through the hole in the back panel and refit grommet.

Procedure 2

If the clearance above the appliance is **less than 300 mm** the appliance must be removed from the wall.

1. Remove the complete casing assembly (front, base and sides)
2. Drain the appliance as described on Page 26.
3. Lower the control panel assembly by undoing the securing screw at the top right hand side of the control panel.
4. Disconnect the input wiring noting positions of wires and thread wiring out of control panel grommet/s.
5. Check the gas supply is isolated at the gas service cock, (1/4 turn of square head), undo the gas cock union nut and position nut clear of thread.
6. Undo the upper isolator valve connections on the C.H. flow, return and Cold water inlet valves. Similarly disconnect hot flow pipe, and pressure relief pipes.
7. Disconnect the flue elbow from the top of the appliance, (4 screws), lift the flue elbow off the boiler connection and rotate the elbow 180° to position the flue clear of the appliance. If a vertical flue system is fitted it will require raising approximately 50 mm (2") to allow the boiler to be lifted off its hanging screws.
8. Remove the bottom boiler securing screw then loosen the appliance upper securing screws and lift the boiler off the wall. Place unit face downwards on the floor. Care should be taken not to damage the pressure gauge or electronics.
9. Access can now be made to the expansion vessel. Undo the flexible pipe connection to the vessel and remove the screws retaining the upper expansion vessel bracket to release the vessel from the appliance.
10. Fit a new expansion vessel and re-assemble in reverse order, using a new sealing washer. At this stage it is advisable to check the pre-charge.

5.24 Expansion Vessel D.H.W. - Fig. 23

Isolate the electrical supply prior to this operation.

1. Remove the white front case and base panel. See 4.1 & 4.2in 'Routine Maintenance'.
2. Lower the control panel assembly by undoing the securing screw at the top right hand side of the control panel. Close the isolating valve on the cold water inlet and open the lowest hot water tap. Remove the drain screw on the isolating valve to completely drain the appliance. Replace drain screw in isolator valve.
3. Remove the access panel to the left of the transformer. Temporarily remove the transformer - See 5.28.

   Note: It is not necessary to fully remove the top right hand screw.

4. Release the vessel by unscrewing it from the inlet manifold.
5. Carefully withdraw the vessel through the access hole. Refit new component.
6. Re-assemble in reverse order, using a new sealing washer. Open the isolating valve, and check for leaks.

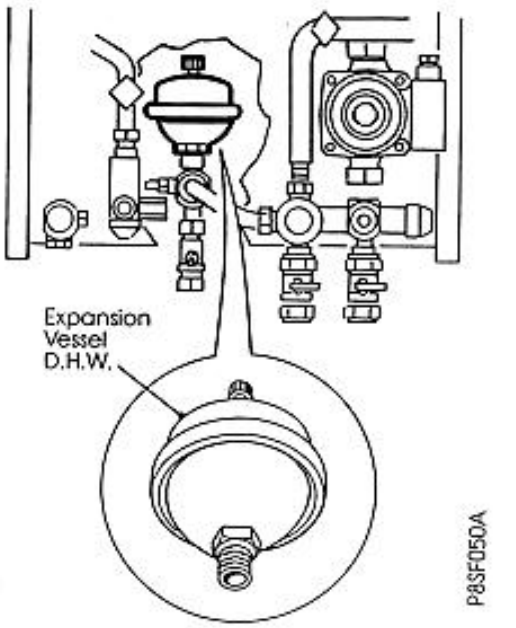

Fig. 23

5.25 Heat Exchanger - Fig. 14

1. Perform 4.1 to 4.6 & 4.8 in 'Routine Maintenance'. Remove the combustion chamber insulation by removing each side panel retaining screw and pulling the complete side panel /insulation assembly forwards. The rear insulation can remain in situ.
2. Drain the appliance as described on Page 26. Undo the heat exchanger connection to the auto air vent pipe.
3. Disconnect the electrical connections from the C.H. overheat thermostat. The control box should be protected from water spillage.
4. Release the four spring clips retaining the heat exchanger tails by pulling the clip forwards and towards the centre of the appliance and ease the heat exchanger up, out of the housings.
5. The heat exchanger waterways can now be descaled or a replacement heat exchanger can be fitted, in which case the overheat thermostat must be transferred to the new heat exchanger.
6. Re-assemble in reverse order. Use a soap solution to lubricate the new 'O' rings when fitting the new heat exchanger, also, ensure the heat exchanger is pushed fully down. Re-charge the system as described in Section 1.8 and check the joints for leaks.

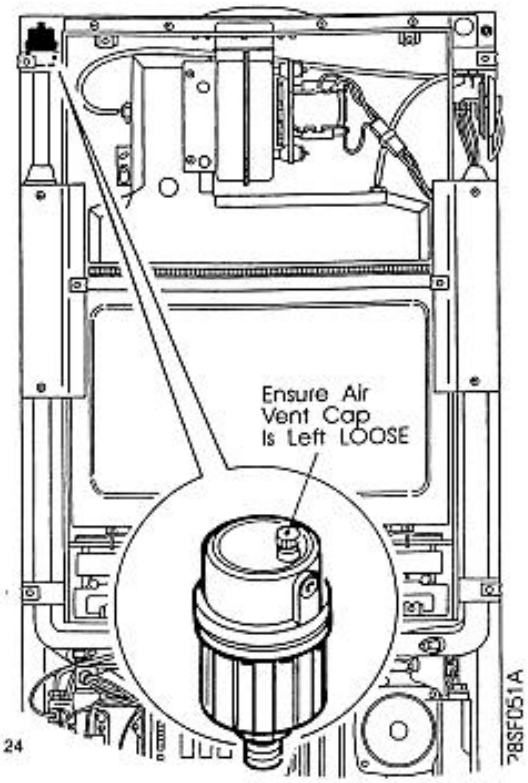

Fig. 24

5.26 Automatic Air Vent - Fig. 24

1. Remove the white front case, base panel and white left hand side panel. See 4.1, 4.2 & 4.3 in 'Routine Maintenance'.
2. Drain the central heating circuit as described on Page 26.
3. Using a spanner to prevent the retaining nut from rotating unscrew the auto air vent and remove from the appliance. If there is insufficient space, removal will be eased if the complete auto air vent and pipe assembly is disconnected from the heat exchanger and then raised above the top of the air box. To do this the fan and fluehood will need to be removed, see 4.4 & 4.5 in 'Routine Maintenance'.
4. Fit new air vent and sealing washer **ensuring the air vent cap is left loose.**
   Re-assemble in reverse order, ensure that the grommet is correctly positioned. Re-charge the system as described in Section 1.8 and check for leaks.

5.27 Pressure Relief Valve - Fig. 25

1. Remove the white front case and base panel. See 4.1 & 4.2 in 'Routine Maintenance'.
2. Drain the central heating circuit as described on Page 26.
3. Undo the outlet tube nut and fully remove the two grub screws holding the pressure relief valve to the pump manifold, undo the top compression joint on the pressure relief valve discharge pipe then remove the valve.

   Note: The outlet of the pressure relief valve is an olive connection.

4. Fit the new pressure relief valve using a new 'O' ring seal and soap solution as a lubricant. Re-assemble in reverse order.
5. Recharge the system as described in Section 1.8 and check for leaks.

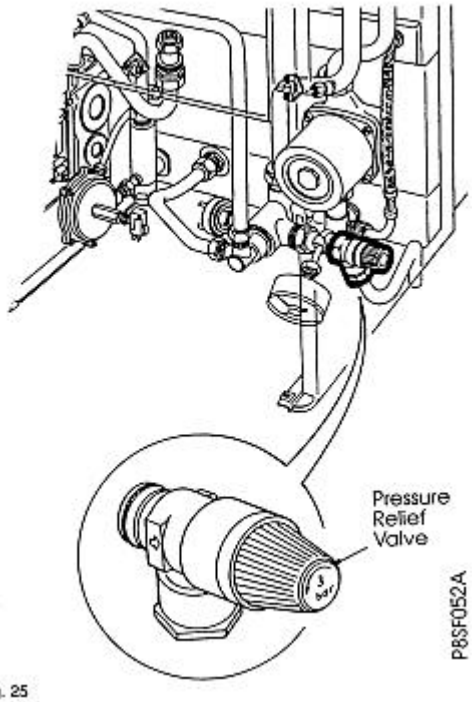

Fig. 25

5.28 Transformer Assembly - Fig. 26

1. Remove the white front case and base panel. See 4.1 & 4.2 in 'Routine Maintenance'.
2. Lower the control panel assembly by undoing the securing screw at the top right hand side of the control panel.
3. Remove the transformer wiring loom from the retaining cable ties and unplug the connector to the electronic control board PL 6 (top right hand side of control board). Thread the wiring out of the control panel.
4. Remove the two screws retaining the transformer to the back panel and remove transformer from appliance.
5. Fit the new transformer assembly in reverse order.

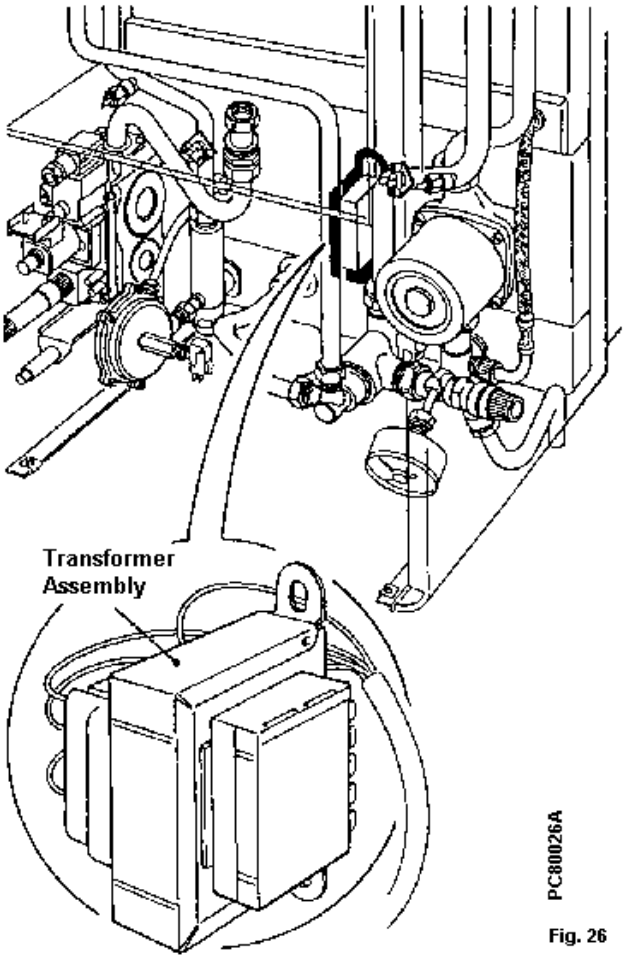

Fig. 26

5.29 Sight Glass With Securing Frame

1. Remove the white front case, base panel and air box main cover. See 4.1, 4.2 & 4.3 in 'Routine Maintenance'.
2. On the inside of the inner door straighten the four retaining tags. Remove sight glass.
3. Renew the sight glass and use a new gasket to seal.
4. Re-assemble in reverse order.

6. Fault Finding - Page 38

Preliminary Actions: a. Set Boiler Switch to Standby. - b. Set Heating switch to 'OFF' (Centre) -
c. Turn OFF all Hot Water Taps - d. Ensure all Isolating Valves at base of appliance are OPEN
e. Turn ON EXTERNAL GAS and ELECTRICAL Supplies - f. Arrange for system controls to be calling for heat

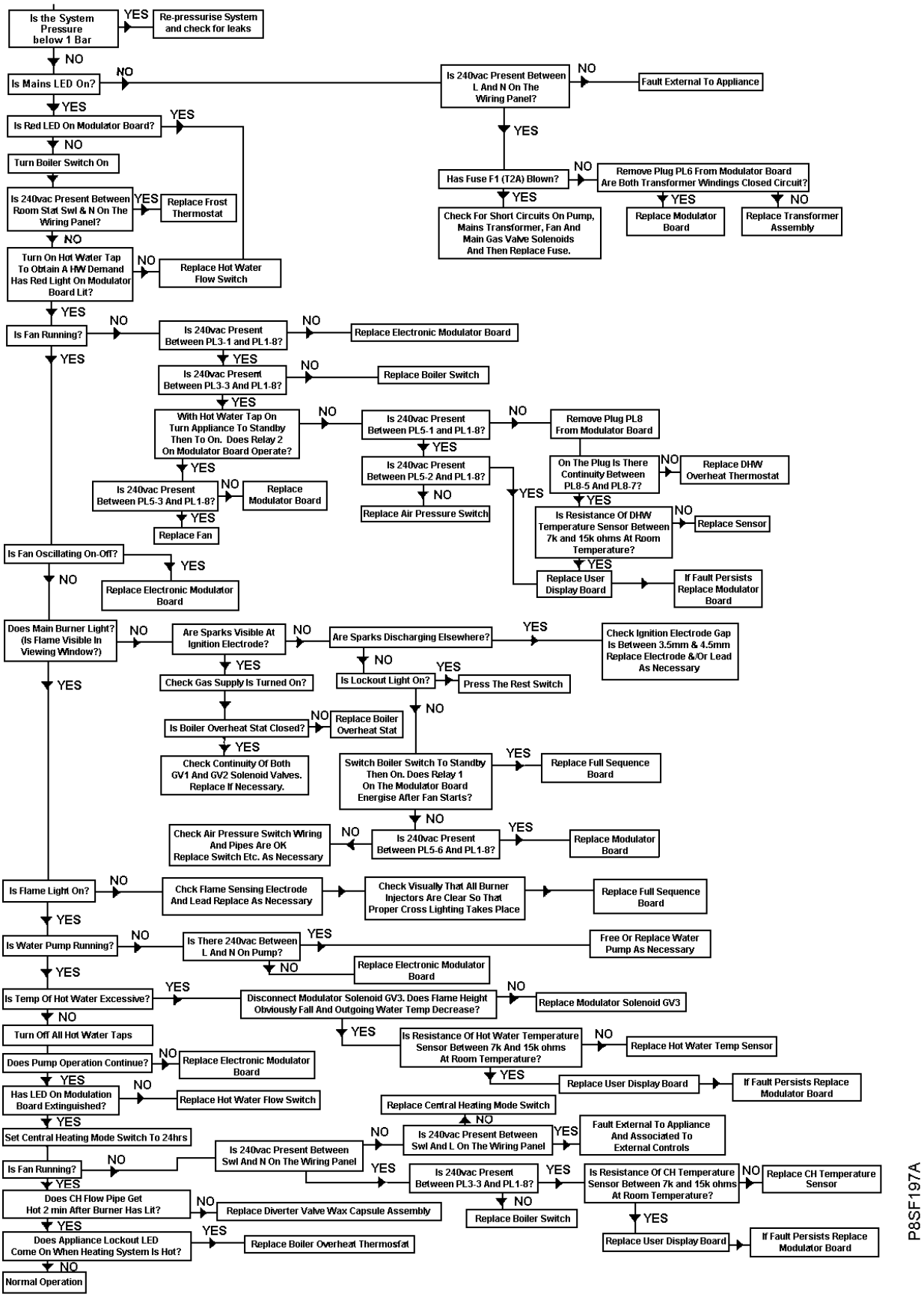

7. Electrical Layouts - Page 39

Control Flow Sequence

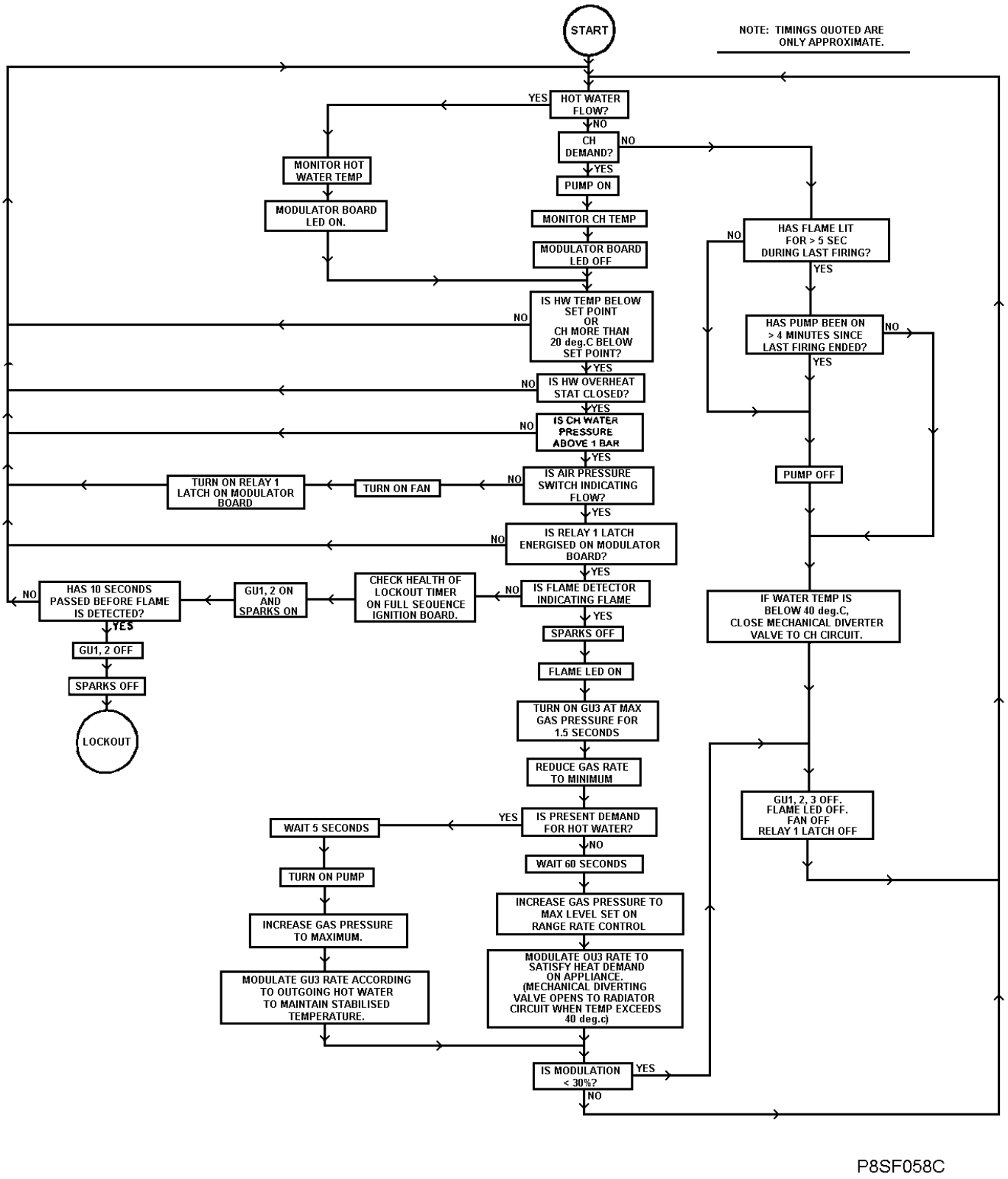

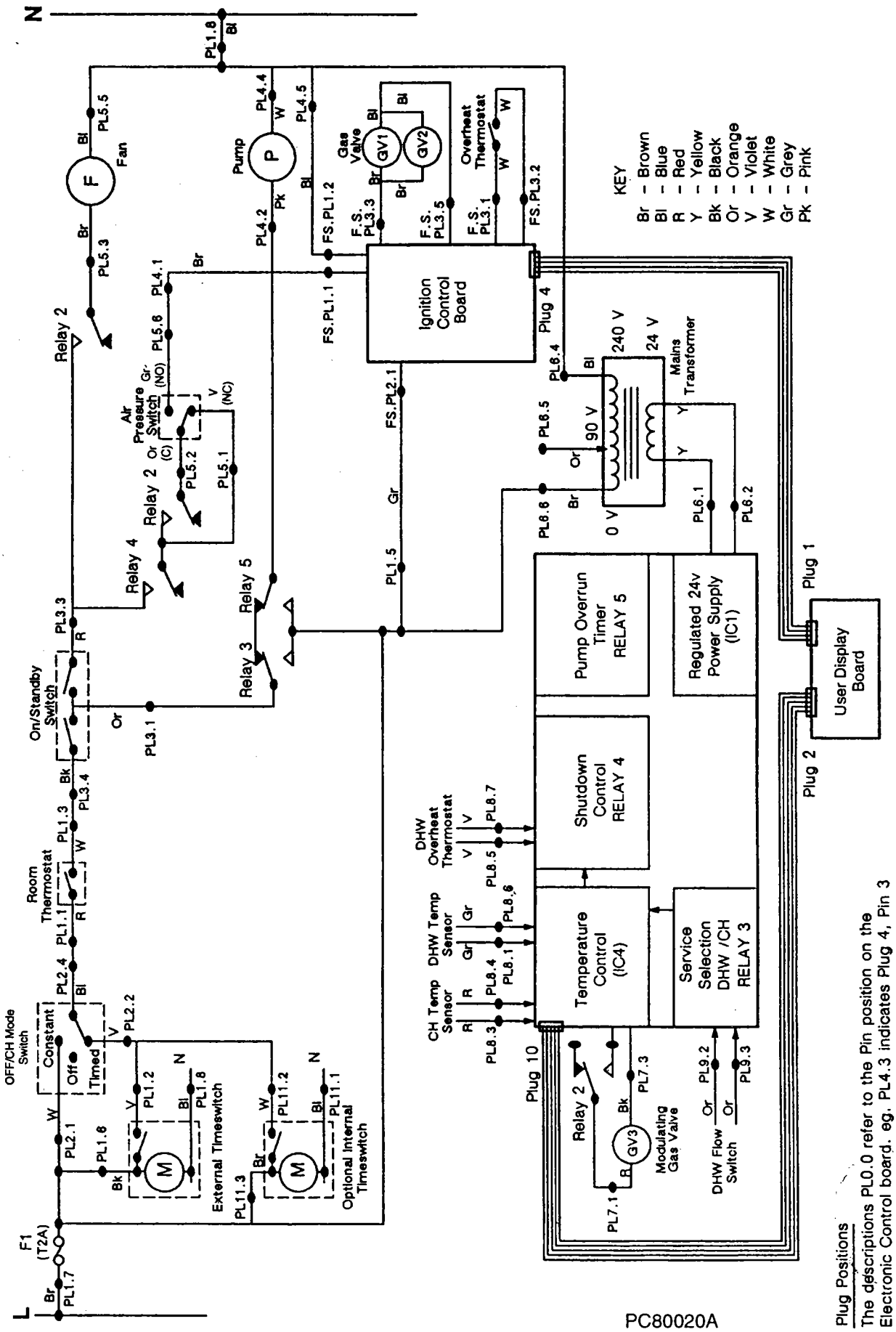

PC80020A

Plug Positions

The descriptions PL0.0 refer to the Pin position on the Electronic Control board. eg. PL4.3 indicates Plug 4, Pin 3 as marked on the control board.

Electrical Diagram - Page 41

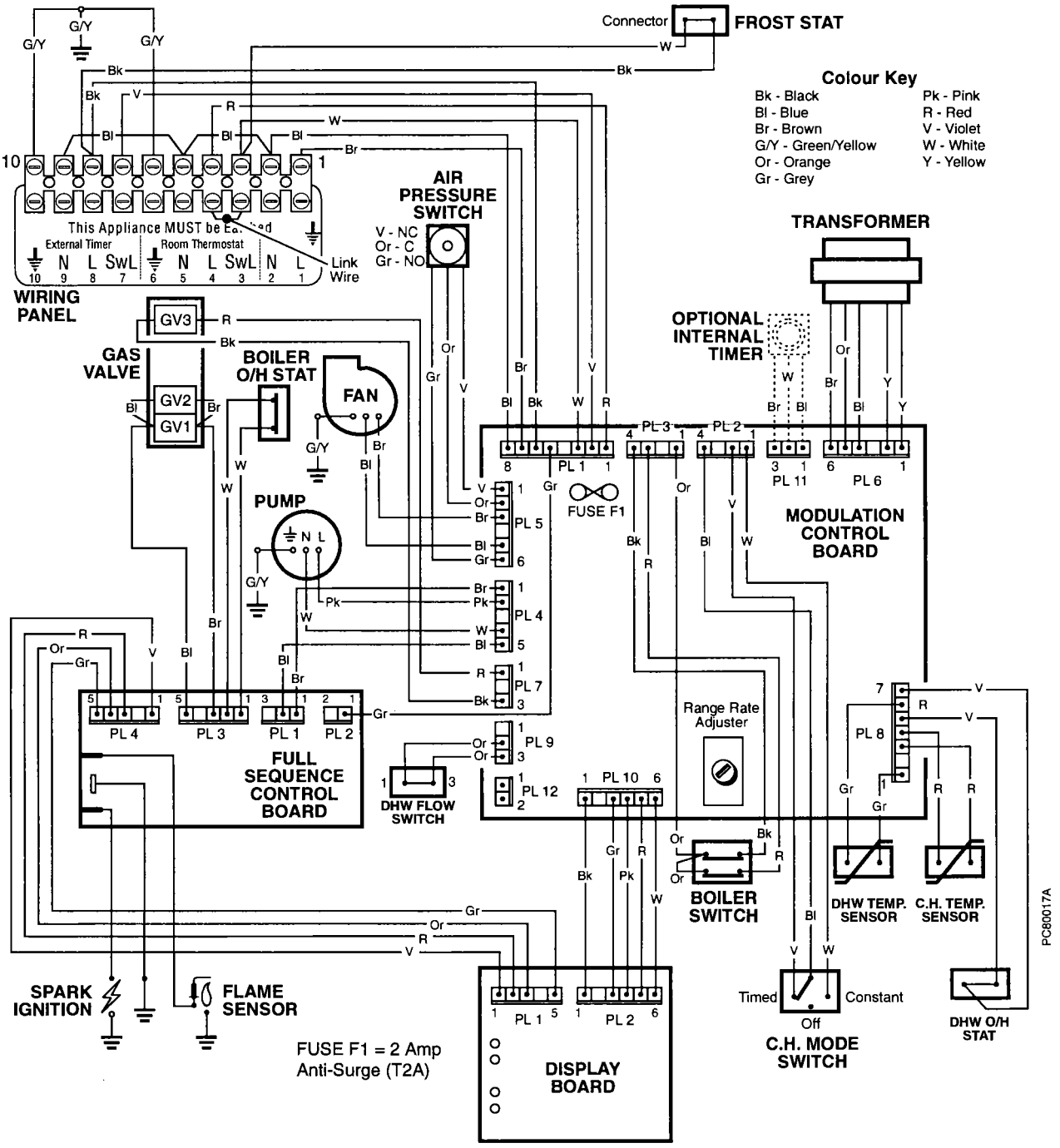

8. Product Specification - Page 42

Heat Input:	Max.	30.0 kW	(102,350 Btu/h)
	Range Rate (C.H. Only)	22.5 kW	(76,760 Btu/h)
	Min.	14.4 kW	(49,130 Btu/h)
Heat Output:	Max.	24.0 kW	(81,880 Btu/h)
	Range Rate (C.H. Only)	17.2 kW	(58,680 Btu/h)
	Min.	10.4 kW	(35,480 Btu/h)
Gas Rate	Full	2.86 m³/hr	101 ft³/hr

Inlet Pressure	20 mbar	(18 - 25 mbar)
Burner Pressure		
Max. (Max. Setting on Gas Valve)	15.0 mbar	(6.0 " w.g.)
Range Rate (C.H. Only)	8.3 mbar	(3.3 " w.g.)
Minimum (Electronically Set)	3.5 mbar	(1.4 " w.g.)

Classifications	I_2H, C12 & C32, IP20
Main Burner	Bray AB 24085M
Gas Control Valve: SIT Controls	Nova 827 (0.827.127) Inc. 1st Solenoid Valve (0.007.424) Inc. 2nd Solenoid Valve (0.007.406) Inc. Modulator - 28V. DC. (0.007.413)
Burner Injector	3 off, Size 700
Electrical Supply	230V ~ 50Hz
Fuse Rating - External	3A
Packed Weight	56.5 kg (125 lbs)
Water Content C.H.	1.85 litres
Gas Supply Connection	1/2 " B.S.P.F. Gas Cock
Inlet Connection D.H.W	15 mm Compression Isolating Valve
Outlet Connection D.H.W	15 mm Copper Pipe
Flow Connection C.H.	22 mm Compression Isolating Valve
Return Connection C.H.	22 mm Compression Isolating Valve
Safety Discharge Pipe	15 mm Copper Pipe
C.H. Sealed System	
Maximum Operating Pressure	2.5 bar36.3 lb/in²
Minimum Operating Pressure	0.5 bar7.25 lb/in²
10 Litre Expansion Vessel. Pre-charge Pressure	1.0 bar14.5 lb/in²
Maximum Temperature Rise across the Boiler	30 °C
Central Heating Flow Temperature	Max. Load 79 °C Min. Load 87 °C
Central Heating Return Temperature	68 °C (Nominal)

D.H.W Flow Rate 35 °C Rise (for reference only)	9.8 litres/minute	2.16 gals/min
D.H.W Flow Rate 45 °C Rise	7.6 litres/minute	1.67 gals/min
D.H.W Temperature: Max.	65 °C	
D.H.W Max. Pressure	10.0 bar	145.0 lb/in²
D.H.W Min. Operating Pressure (Dynamic)	1.0 bar	14.5 lb/in²
D.H.W Expansion Vessel Pre-charge Pressure	3.5 bar	50.8 lb/in²

Installation instructions included as necessary with each kit.

Standard Horizontal Flue Kit Sales Code: 1PUMAFLUE (approx. 1m)

A) Flue Elbow

B) Air Seal Clamp (Including screws & captive nuts)

C) Air Tube Seal

D) Flue Terminal/Seal Assembly

E) Inner Wall Seal

F) Wall Liner

G) Centralizing Spring

Polybag Pack consisting of:

H) Elbow Gasket

J) Product Tube 'O' Ring (one spare)

K) 2 off 38mm Woodscrews & Wall Plugs

L) 4 off 10mm long M5 Screws

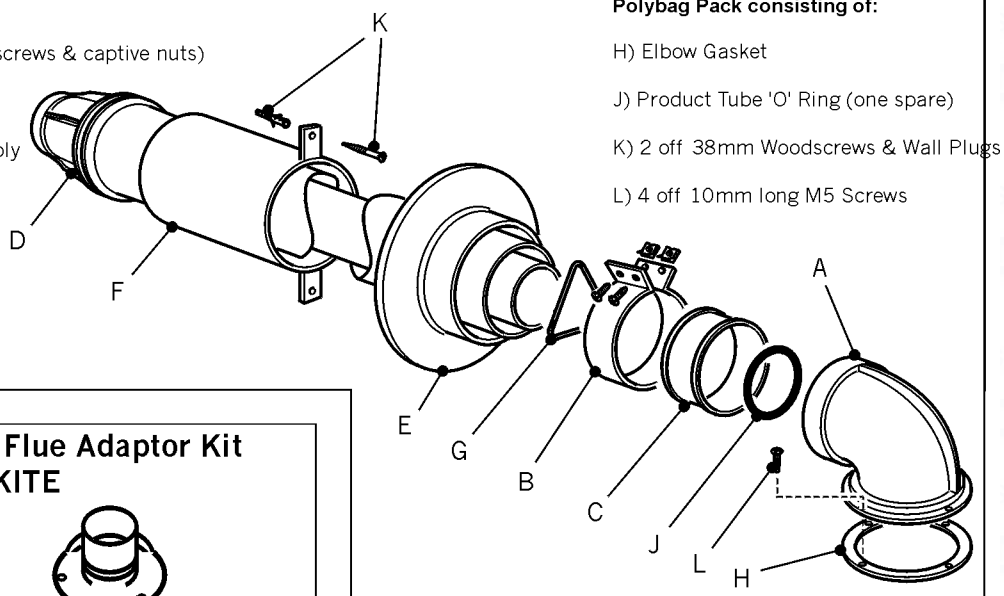

Concentric Vertical Flue Adaptor Kit Sales Code: PUMAKITE

Concentric Vertical Flue Kit Sales Code: PUMAKITD

A) Terminal Assy.

B) Terminal Clamp Bracket

C) Air Tube Adaptor

D) Product Tube Adaptor

E) Boiler Adaptor

F) Air Tube Seal

G) Air Tube Clamp (Including Screws Nuts)

H) Ceiling Seal

J) Flange Assy. Gasket

K) Poly Bag Assey.: 4off 10mm long M5 Screws

L) Ceiling Template

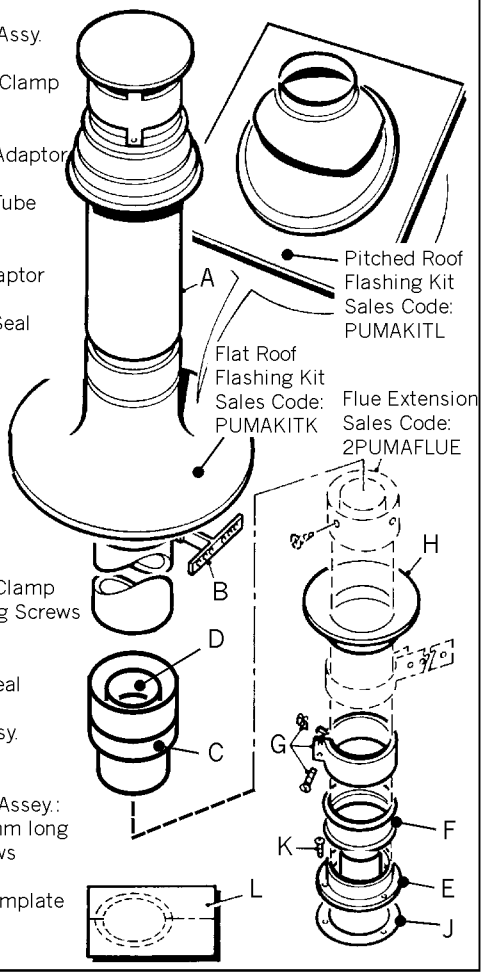

Twin Tube Vertical Flue Kit Sales Code: PUMAKITF

A) Terminal Assy.

B) Terminal Clamp

C) Branch Piece

D) Adaptor Assy. Gasket

E) Boiler Adaptor

F) 80mm Dia. Female/Female Connector

G) Poly Bag Assy. 4 off 40mm long M5 Screws

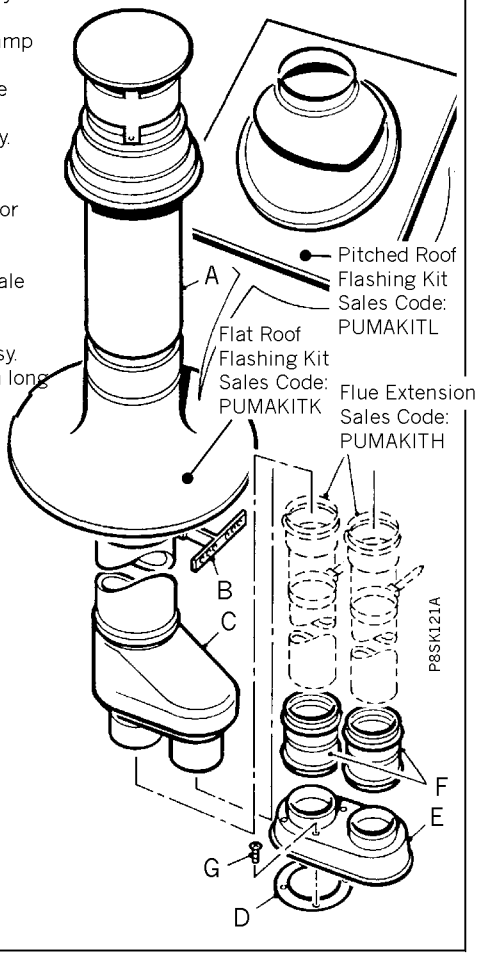

1m Flue Extension Kit
Sales Code: 2PUMAFLUE

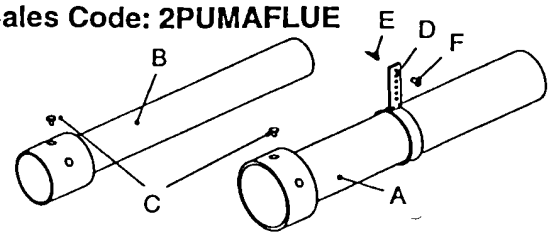

A) Extension Air Tube (Outer)
B) Extension Flue Tube (Inner)
C) S/T Screws (6 off)
D) Fixing Bracket
E) Woodscrews (2off)
F) Wall Plugs (2 off)

Flat Roof Flashing Sales Code: PUMAKITK

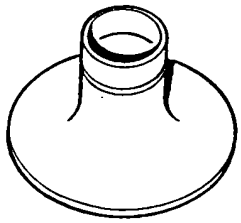

Pitched Roof Flashing Sales Code: PUMAKITL

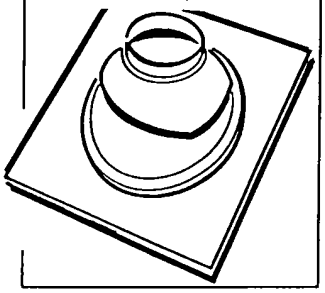

90° In-Line Bend Kit
Sales Code: PUMAKITB

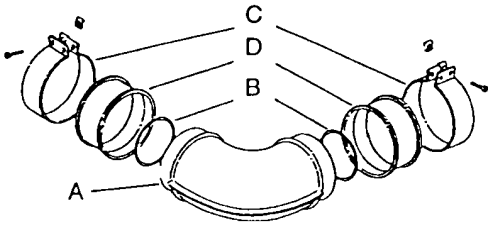

A) 90° In-Line Elbow
B) Product Tube 'O' Ring (2 off)
C) Air Tube Clamp (Including Nuts/Screws)
D) Air Tube Seal (2 off)

135° In-Line Elbow Kit
Sales code: PUMAKITC

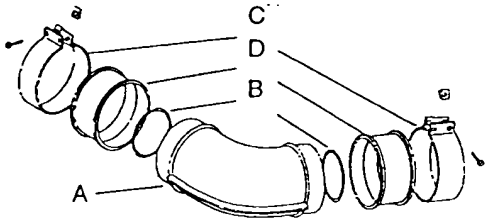

A) 135° In-Line Elbow
B) Product Tube 'O' Ring (2 off)
C) Air Tube Clamp (Including Nuts/Screws)
D) Air Tube Seal (2 off)

1m Twin Tube Flue Extension Kit
Sales Code: PUMAKITH

A) Extension Tubes (2 off)

B) Fixing Brackets (Incl. Screws & Clips)

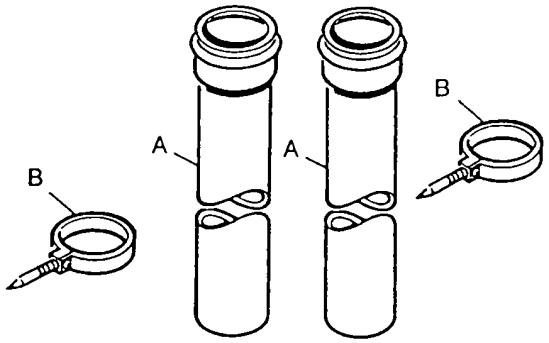

Twin Tube 90° In-Line Bend Kit
Sales code: PUMAKITI

A) 2 off - 90° In-Line Elbow

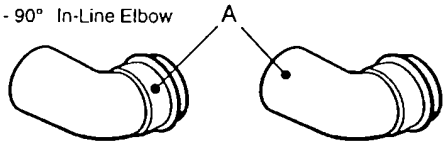

Twin Tube 135° In-Line Bend Kit
Sales Code: PUMAKITJ

A) 4 off - 135° In-Line Bend

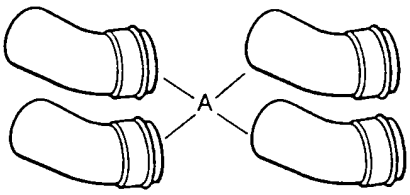

Terminal Guard Sales Code: PTERMGUARDEF

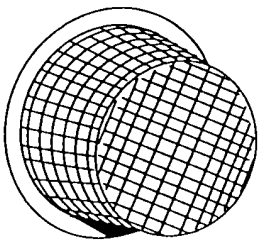

Flue Elbow Kit Sales Code: PUMAKITA

A) Flue Elbow
B) 'O' Ring
C) Air Tube Clamp Assy.
D) Clamp Seal
E) Elbow Gasket
F) Screws M5 x 10mm (4 off)

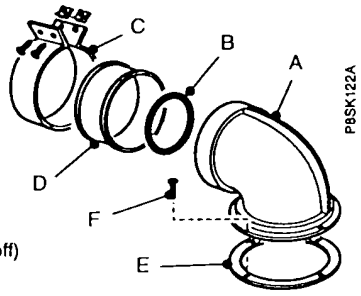

Installation instructions included as necessary with each kit.

Fig. 2

10. Short List of Spares - Page 46

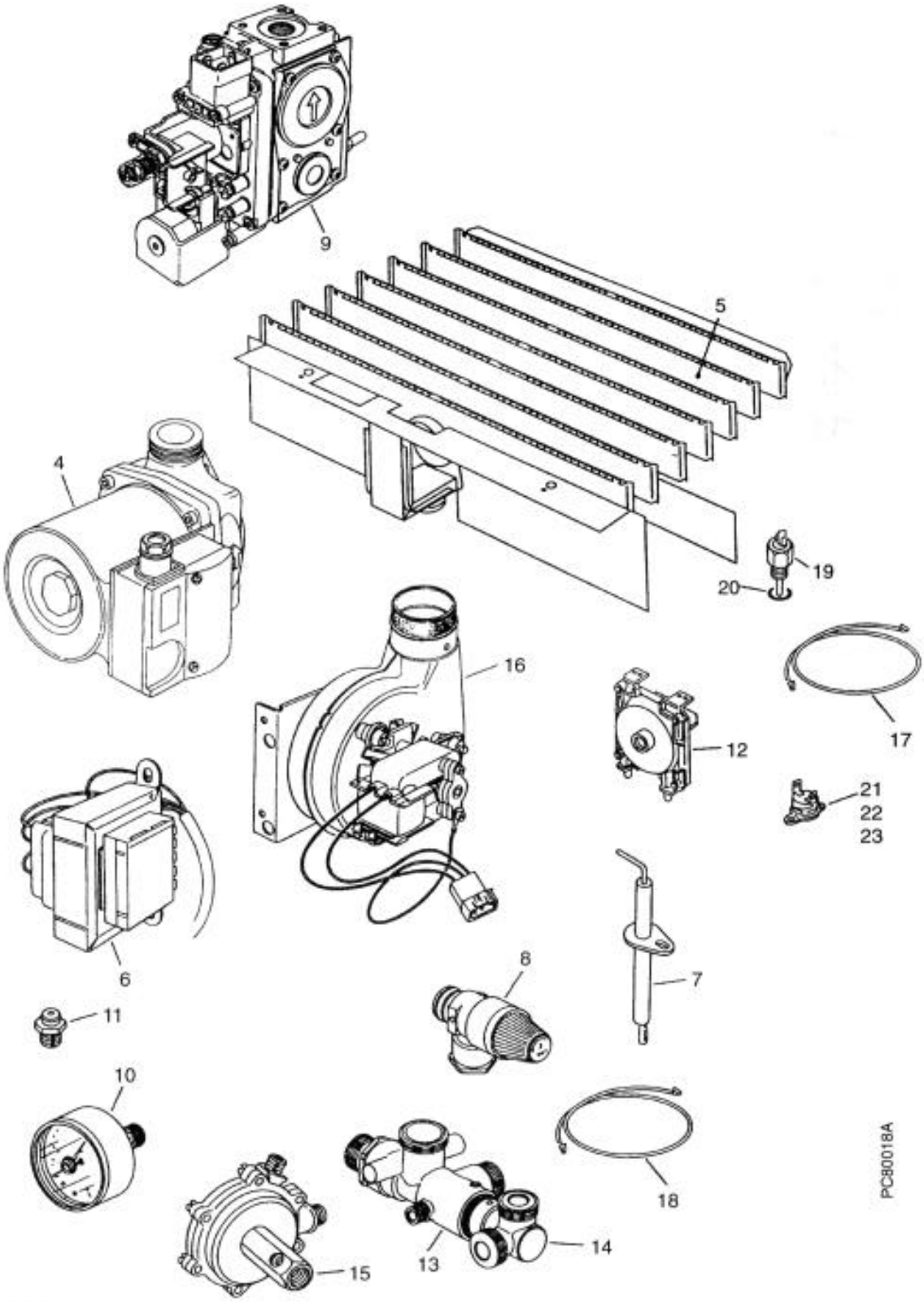

Fig. 30

Short List of Spares - Page 47

Item	Description	Qty	Potterton Part No.	G.C. Part No.
1	Modulation Control Board	1	929686	289 551
2	Display Board	1	21/20761	
3	Full Sequence Control Board	1	929689	289 555
4	Pump Kit (Myson Compact)	1	929636	289 730
5	Main Burner Assembly	1	10/22271	
6	Transformer c/w Wiring	1	929681	289 547
7	Electrode Kit	2	929550	289 478
8	Pressure Relief Valve - 3 bar c/w 'O' Ring	1	929647	379 398
9	Gas Valve - SIT	1	402988	379 349
10	Pressure Gauge	1	929644	289 531
11	Burner Injector, Bray 2.46mm	3	22/20207	
12	Air Flow Switch - Honeywell C6065A1093	1	642212	379 350
13	Diverter Valve Assembly Complete	1	929651	289 718
14	Wax Capsule Assembly	1	929803	289 741
15	D.H.W. Flow Switch	1	929673	289 724
16	Fan Assembly	1	929501	379 342
17	Electrode Lead Assembly	1	929551	289 479
18	Detection Lead Assembly	1	929552	289 480
19	D.H.W/C.H. Temperature Sensors	2	430011	289 528
20	'O' Rings	2	929632	285 572
21	C.H. Limit Thermostat (36TE21-12785)	1	929562	379 348
22	D.H.W. Overheat Thermostat (36TE21-12786)	1	929634	379 397
23	Frost Protection Thermostat (36TE21-12784)	1	929635	379 396

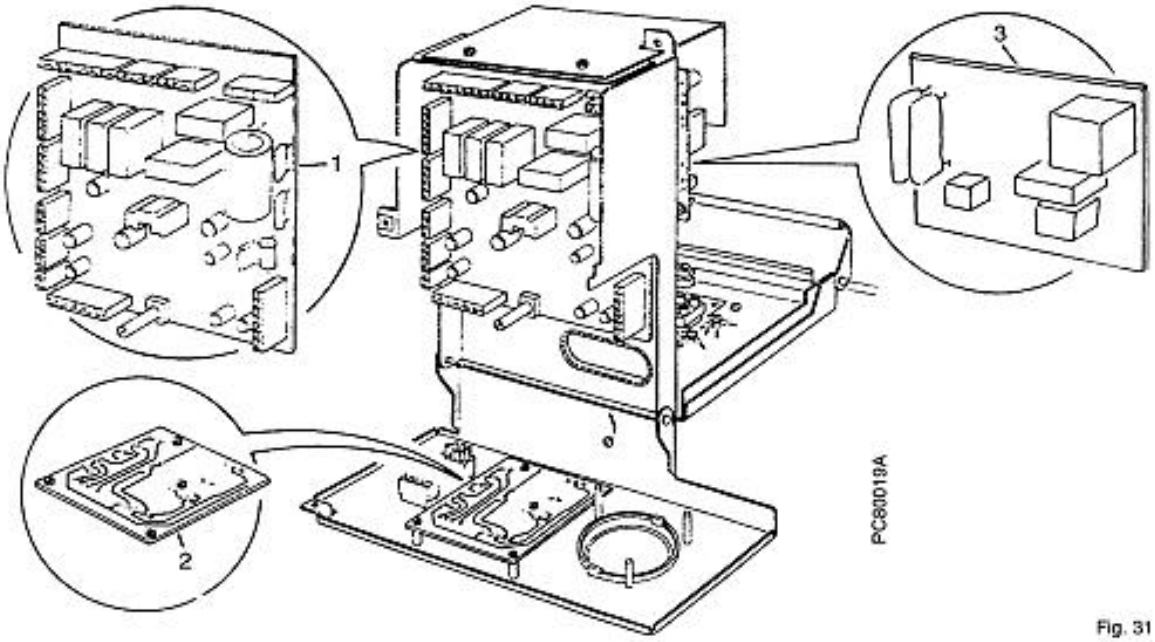

Fig. 31

Back page