POTTERTON

Installation & Service Instructions Kingfisher Mf 40 – 100

About the Boiler

See inside cover for models covered by these instructions.
This Floor Mounted Fan Assisted Gas Boiler is available as Conventional or Balanced Flue.
This boiler is for use with Natural Gas (G20) Only at 20mbar and for use in GB & IE.

About Safety

The Gas Safety (Installation and Use) Regulations 1994 (As Amended) & The Gas Safety (Installation and Use) (Amendment) Regulations 1996.

‘‘ In your own interest, and that of safety, it is law that all gas appliances are installed by competent persons, in accordance with the above regulations. Failure to install appliances correctly could lead to prosecution.’’

Installation must be in accordance with the Installation & Service Instructions and the rules in force.

Leave these instructions with the user for use on future calls.

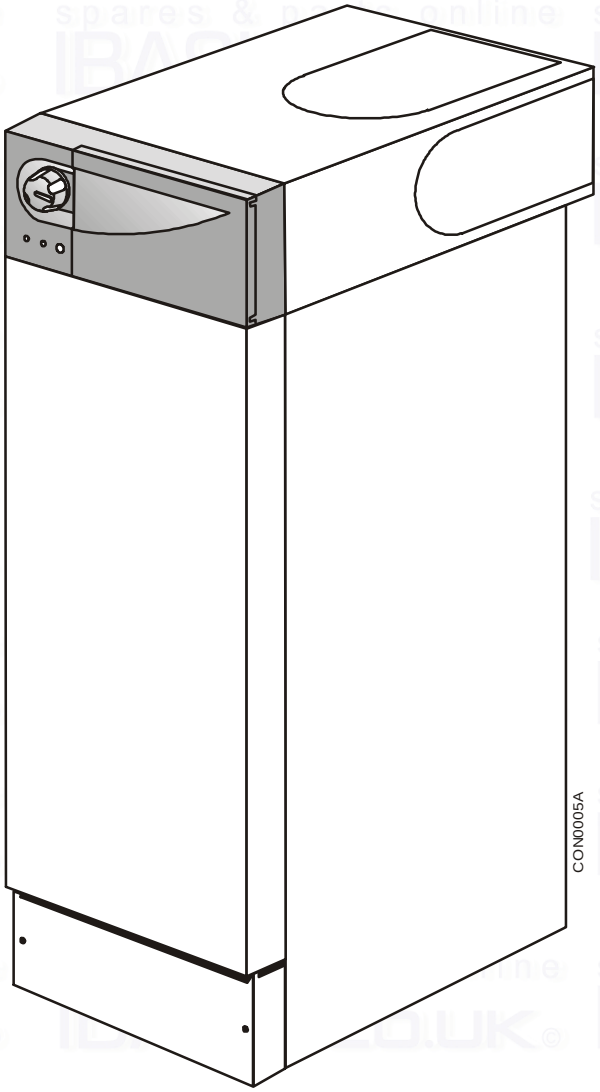

CE

spares & parts online IBASIS.CO.UK

Contents - Page 2

Technical Data. 3

Introduction..... 5
Health & Safety Information..... 5
Codes of Practice 5

1. Installation Requirements..... 6
1.1 Gas Supply 6
1.2 Electricity Supply..... 6
1.3 Location of Boiler 6
1.4 Air Supply - CF/RS..... 7/9
1.5 Flue Systems - CF/RS 8/9
1.6 The System..... 11

2. Installation..... 15
2.1 Install the Boiler 15
2.2 Install the Flue..... 19
2.3 Connect the Gas Supply 16
2.4 Connect the Water Supply 16
2.5 Connect the Power Supply Cable 17
2.6 Install the Optional Programmer 18

3. Commissioning..... 21
3.1 Commission the Boiler..... 22
3.2 Final Adjustments 22
3.3 Instruct the User..... 23
3.4 Advise the User..... 23

4. Service & Replacement of Parts..... 24
4.1 General Access..... 25
4.2 Electronic Control Board 26
4.3 Air Pressure Switch..... 26
4.4 Temperature Sensor 26
4.5 Overheat Thermostat 26
4.6 Burner, Gas Valve, Injector & Electrode..... 27
4.7 Combustion Chamber Insulation..... 27
4.8 Fan & Flue Hood..... 28
4.9 Products Discharge Safety Device - TTB (CF Models Only)..... 28

5. Wiring Diagrams 30

6. Fault Finding 32

7. Short List of Spares..... 36

8. Optional Extras 38

The models covered by these instructions are:-

Kingfisher Mf CF40 - G.C. No. 41 589 02
Kingfisher Mf CF50 - G.C. No. 41 589 03
Kingfisher Mf CF60 - G.C. No. 41 589 04
Kingfisher Mf CF70 - G.C. No. 41 589 09
Kingfisher Mf CF80 - G.C. No. 41 589 10
Kingfisher Mf CF90 - G.C. No. 41 589 11
Kingfisher Mf CF100 - G.C. No. 41 589 12

Kingfisher Mf RS40 - G.C. No. 41 393 88
Kingfisher Mf RS50 - G.C. No. 41 393 95
Kingfisher Mf RS60 - G.C. No. 41 393 96
Kingfisher Mf RS70 - G.C. No. 41 393 97
Kingfisher Mf RS80 - G.C. No. 41 393 98
Kingfisher Mf RS90 - G.C. No. 41 393 99
Kingfisher Mf RS100 - G.C. No. 41 589 01

The boiler model and serial number are given on the boiler data label which is located on the heat exchanger cover plate.

SAFETY, PERFORMANCE & QUALITY

Kingfisher Mf boilers have been assessed by a Government appointed Notified Body and shown to meet the 'Essential Requirements' of the European Gas Appliance Directive.

The Directive lays down requirements for the safety and efficiency of the appliance, together with its design, construction, and use of materials.
It also requires the production process to be covered by an approved and monitored system of quality assurance.

Technical Data - Page 3

Heat Input & Efficiency figures are quoted as gross		Boiler models 40	50	60	70	80	90	100
Maximum Rate								
Output	kW	11.72	14.65	17.58	20.52	23.45	26.38	29.31
	Btu/h	40,000	50,000	60,000	70,000	80,000	90,000	100,000
Input	kW	14.65	18.31	22.00	25.60	29.30	32.98	36.76
	Btu/h	49,986	62,474	75,064	87,347	99,972	112,528	125,425
Gas rate	m^3/h	1.40	1.75	2.10	2.44	2.79	3.14	3.50
	ft^3/h	49.32	61.65	73.98	86.31	98.64	110.97	123.75
Efficiency	%	80.0	80.0	80.0	80.0	80.0	80.0	79.7
Burner Pressure	mbar	14.2	14.8	11.9	13.2	13.2	13.1	13.0
	in wg	5.68	5.92	4.76	5.28	5.28	5.24	5.20
Minimum Rate								
Output	kW	8.8	11.72	14.65	17.58	20.52	23.45	26.38
	Btu/h	30,000	40,000	50,000	60,000	70,000	80,000	90,000
Input	kW	11.25	14.87	18.61	22.12	25.83	29.64	33.43
	Btu/h	38,385	50,736	63,497	75,473	88,132	101,149	114,063
Gas rate	m^3/h	1.07	1.42	1.77	2.11	2.46	2.83	3.19
	ft^3/h	37.89	50.07	62.66	74.47	86.95	99.80	112.22
Efficiency	%	78.2	78.8	78.7	79.5	79.4	79.1	78.9
Burner Pressure	mbar	8.4	9.8	8.4	9.8	10.0	10.6	10.6
	in wg	3.36	3.92	3.36	3.92	4.00	4.24	4.24
Injector Size	mm	2.9	3.2	3.7	3.9	4.1	4.4	4.7

Maximum Working Head	30.5m (3 bar)
Minimum Working Head	300mm
Minimum Circulating Head - Gravity	1.2m
Gas Supply Pressure	20mbar
Gas Supply Connection	Rc. ½ (½ in BSP Female)
Maximum Flow Temperature	82°C
Flow Connection	28mm Copper
Return Connections - Gravity	28mm Copper
Return Connections - Pumped	28mm Copper
Water Content	6.5 litres
Appliance Weight Installed - Dry	65.0 kg RS Model / 69.0 kg CF Model
Electricity Supply	230v ~ 50Hz Fused at 3A
Internal Fuse	Type 2 AT (2 off)
Power Consumption	80 Watts (excluding pump)
Classifications	CAT 1 $_2$H B_{12BS}, C_{12}, C_{32} (40 - 70) IP20 NOx Class 1 - 40, 50, 60, 80, 90 & 100 models NOx Class 2 - 70 model

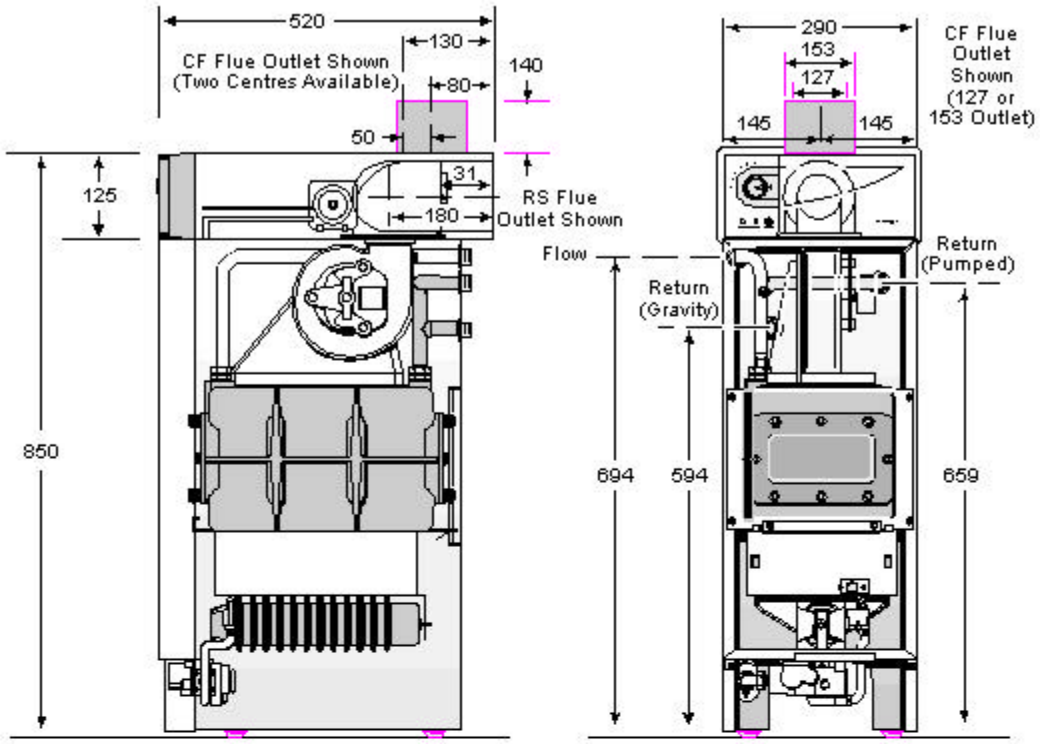

Side View

Front View

All dimensions are in mm

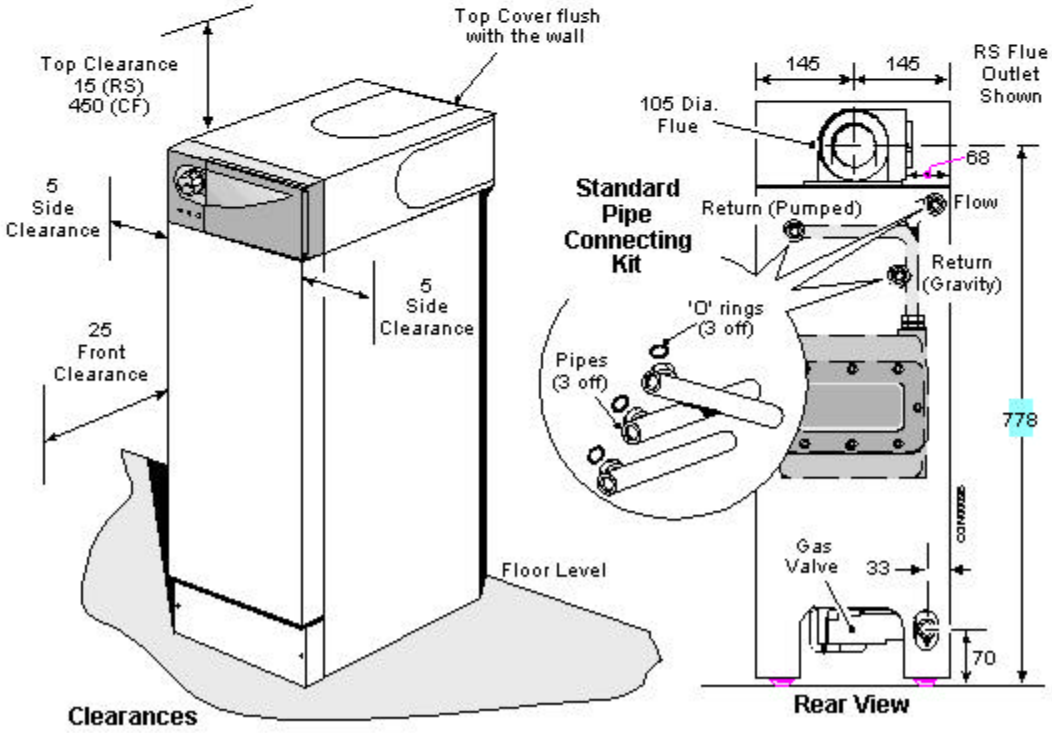

Clearances

Rear View

Fig 2

The Gas Safety (Installation and Use) Regulations 1994 (As Amended) & The Gas Safety (Installation and Use)

This appliance must be installed and serviced by a competent person, in accordance with the above regulations.

In the UK 'Corgi' Registered Installers (including the regions of British Gas Plc) undertake to work to a safe and satisfactory standard.

Failure to install appliances correctly could lead to prosecution.

It is in your own interest, and that of safety, to ensure that the regulations are complied with.

Kingfisher Mf boilers are fully automatically controlled, floor standing, fan powered, balanced or conventional flued appliances using a cast iron heat exchanger and are available in outputs ranging from 8.8 - 29.31 kW (40,000 - 100,000 Btu/h)

The boilers are designed for use on fully pumped open vented or sealed water systems with an indirect hot water cylinder or open vented gravity systems. THEY MUST NOT BE CONNECTED TO A DIRECT CYLINDER.

The boilers are for use on Natural Gas (G20) only.

Samples of the Potterton Kingfisher MF gas boilers have been examined by British Gas Plc, a United Kingdom Notified Body. The range is certified to comply with the essential requirements of the Gas Appliance Directive 90/396/EEC, the Low Voltage Directive 72/23/EEC and shows compliance with the Electro Magnetic Compatibility Directive 89/336/EEC and are therefore permitted to carry the CE Mark.

Delivery & Kits Available

RS Model is delivered in two packages (1) the boiler with fittings and (2) the flue assembly.
CF Model is delivered in one package.

Health and Safety Information for the Installer and Service Engineer

Under the Consumer Protection Act 1987 and Section 6 of the Health and Safety at Work Act 1974, we are required to provide information on substances hazardous to health.

Small quantities of adhesives and sealants used in the product are cured and present no known hazards.

The following substances are also present.

Insulation and Seals

Material - Man Made Mineral Fibre.

Description - Boards, Ropes, Gaskets.

Known Hazards - Some people can suffer reddening and itching of the skin. Fibre entry into the eye will cause foreign body irritation which can cause severe irritation to people wearing contact lenses. Irritation to respiratory tract.

Precautions - Dust goggles will protect eyes. People with a history of skin complaints may be particularly susceptible to irritation. High dust levels are only likely to arise following **harsh** abrasion.In general, normal handling and use will not present high risk, follow good hygiene practices, wash hands before, touching eyes, consuming food, drinking or using the toilet.

First Aid - Medical attention must be sought following eye contact or prolonged reddening of the skin.

Codes of Practice

The boiler must be installed in accordance with: The Gas Safety (Installation and Use) Regulations 1994 (As Amended) & The Gas Safety (Installation and Use) (Amendment) Regulations 1996. and the current issue of:-

The Building Regulations, Building Standards (Scotland) Regulations, Local Building Regulations, Model and local Water Undertaking Bye-laws, IEE Wiring Regulations and Health & Safety Document No. 635 "The Electricity at Work Regulations 1989".

IMPORTANT

This appliance has been certified for safety. It is therefore important that no external control device (e.g. flue dampers, economisers, etc.) be directly connected to the appliance unless covered by these Installation & Service Instructions or otherwise recommended in writing. Any direct connection of a control device not approved by Potterton Myson Ltd, could invalidate the CE Certification and normal appliance warranty.

1.1 Gas Supply

The meter and supply pipes must be capable of delivering this quantity of gas in addition to the demand from any other appliances in the house and must be governed at the meter.

On 90 & 100 models, due to the gas flow rate required, 22mm gas supply pipe should be used up to the inlet connection of the gas cock on the boiler.

The complete installation must be tested for gas soundness and purged as described in BS6891.

1.2 Electricity Supply

230V ~ 50Hz via a fused double pole switch with a contact separation of at least 3 mm in both poles adjacent to the boiler. Power consumption is approximately 80W. There must be only one common isolator for the boiler and its control system and it must provide complete electrical isolation. A plug (if fitted) must be accessible to the user after installation of the appliance.

Fuse the supply at 3 A. The minimum requirement for the power supply cable is that it should be a PVC sheathed cord at least 0.75 mm² (24 x 0.2 mm) (code designation HO5 VV-F or HO5 VVH2-F) as specified in table 16 of BS6500:1984.

All wiring external to the boiler shall comply with the latest IEE Wiring Regulations, and any local regulations which apply.

WARNING: THIS APPLIANCE MUST BE EARTHED.

In the event of an electrical fault after installation of the boiler, preliminary electrical systems checks must be carried out i.e. Earth Continuity, Short Circuit, Polarity and Resistance to Earth.

1.3 Location of Boiler

The boiler is not suitable for external installation. The boiler must stand firm and level. No special floor protection is needed, but finishes which soften when warm e.g. linoleum and plastic floor tiles should be removed or may be protected by an insulating sheet at least 10mm thick.

The boiler must be installed so that the flue terminal is exposed to the external air. It is important that the position of the terminal allows the free passage of air across it at all times.

The boiler is suitable for installation against a combustible wall e.g. wood cladding, provided that the flue duct is not closer than 25 mm to combustible material. A metal sleeve should be installed to surround the flue duct to provide a 25mm annular space. Further guidance is given in BS5440:1:1990, sub-clauses 3.3 and 4.2.5.

If the boiler is to be installed in a timber framed building it should be fitted in accordance with the British Gas publication- Part 19 - Building and Kitchen Work. If in doubt advice must be sought from Potterton Myson.

The boiler may be installed in any room, although particular attention is drawn to the requirements of the current IEE Wiring Regulations and, in Scotland, the electrical provisions of the Building Standards applicable in Scotland with respect to the installation of the boiler in a room containing a bath or shower.

RS Models: Where a room-sealed appliance is installed in a room containing a bath or shower, any electrical switch or appliance control, utilising mains electricity should be so situated that it cannot be touched by a person using the bath or shower.

CF Models: Conventional flue boilers can be installed either in a kitchen or utility room or inside a suitably ventilated, purpose designed or modified compartment.

Where the installation of the boiler will be in an unusual position, special procedures may be necessary and BS6798 and BS5546 give detailed guidance on this aspect.

A compartment used to enclose the boiler must be designed and constructed specifically for this purpose. An existing compartment may be used provided that it is modified for the purpose. Details of essential features of compartment design including airing cupboard installations are given in BS6798 and BS5546 and should be complied with.

RS Models: If the boiler is fitted under a worksurface it may be located next to or between kitchen cabinets or fittings providing that the front of the boiler case is visible and unobstructed, the special requirements for an enclosed compartment will not apply

If the boiler is to be fitted under a worksurface, the worksurface may need to be removed to install the boiler. It is advisable that the worksurface be removable to allow access for servicing if required.

If the boiler is to be fitted in a run of kitchen units it is recommended that the boiler is fitted first or the adjacent units removed.

The boiler requires the clearances shown in Fig. 2.

Conventional Flue Models - See Page 7 & 8.
Balanced Flue Models - See Pages 9 & 10.

Conventional Flue Models

1.4 Air Supply

The air requirements must meet BS 5440 Part 2.

The room in which the boiler is installed must be ventilated. Ventilation of the room containing the boiler shall include air for combustion and correct operation of the flue (ie Draught Diverter dilution).

A permanent air vent shall be provided in an outside wall of the building either at high or low level in accordance with Table 1.

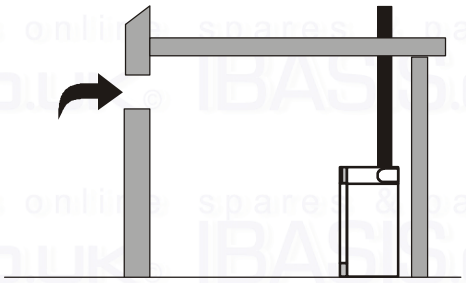

Open Flue
Boiler In Room

Table 1

Combustion Air	
Free Area cm sq.	
CF40	35
CF50	51
CF60	68
CF70	84
CF80	101
CF90	117
CF100	134

The opening may be:

a) Directly into the room or space containing the boiler or indirectly via an opening of at least the same area.

b) Via a duct either directly into the room or space or indirectly via an opening of at least the same free area.

Where air is drawn indirectly from outside through more than two air vents refer to BS 5440 Part 2.

Where an extraction fan is fitted in the room containing the boiler, special ventilation requirements must be implemented. Refer to BS 5440 Part 2.

Any grille and/or duct should be so sited and of a type not to become easily blocked or flooded and should offer low resistance to airflow.

If the boiler is installed in a compartment, permanent air vents are required in the compartment, one at high level and one at low level (Table 2), either direct to the outside air or to a room.

Both high level and low level air vents must communicate with the same room or must be on the same wall to outside air.

If the boiler is installed in a compartment with a door, allow at least 25 mm clearance between the front of the boiler and door for air movement.

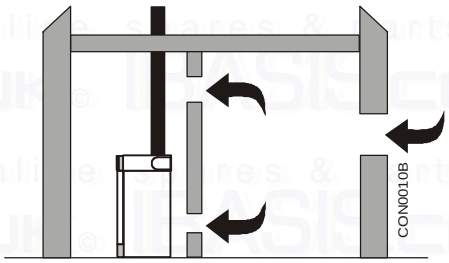

Open Flue Boiler Compartment
Ventilated From Inside

Table 2

Compartment Ventilation		
Free Area cm sq.	High Level	Low Level
CF40	132	264
CF50	165	330
CF60	198	396
CF70	231	462
CF80	264	528
CF90	297	594
CF100	331	662

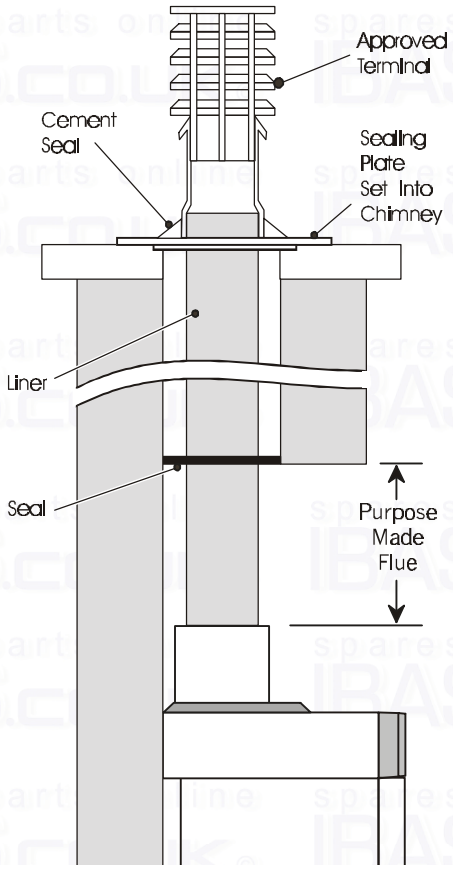

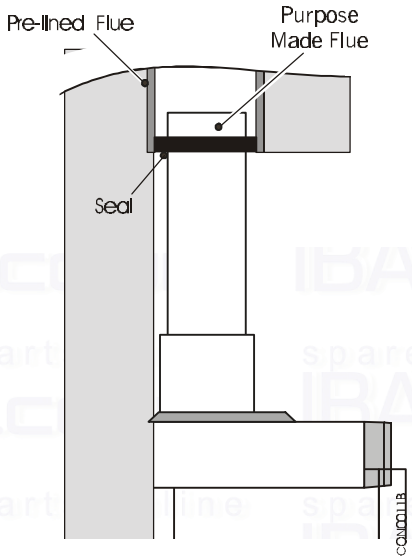

1.5 Flue Systems

A flue system (lined throughout its length) must be provided to evacuate the flue products of combustion from the boiler. Reference should be made to the building regulations and BS 5440:1. and the flue system efficiency should be checked in accordance with BS 5440.

Ideally a flue should rise vertically and any terminal or termination point shall be positioned so that combustion products can disperse safely at all times. Therefore for practical purposes, the flue should have the shortest possible run to external atmosphere, with as near vertical rise as possible, 90° bends should be avoided. The terminal must be at least above roof level and of a type approved by British Gas.

There should be at least 600mm of vertical flue from the boiler flue socket.

Horizontal runs should be avoided, however if a near horizontal flue run is unavoidable, the total vertical height necessary should be calculated in accordance with BS 5440:1.

If an existing chimney is used, ensure that it is thoroughly swept before lining or connecting the boiler. The liner must have an internal diameter of 100mm for the 40 to 60 models and 125mm for the 70 to 100 models.

Care should be taken to avoid condensation in the flue.

In the case of a pre-lined chimney, it must be connected to the socket of the boiler flue hood with a length of purpose made flue.

Where flue size is to be determined by calculation, the following information should be used

Model Size	Mass Rate of Combustion Products (g/sec)	Average Temp. (ºC)
40	20.91	71
50	23.92	83
60	27.11	91
70	32.46	92
80	36.19	94
90	37.97	98
100	41.43	103

Next Section is 1.6 The System.

Balanced Flue Models

1.4 Air Supply

The air requirements must meet BS 5440 Part 2.

The room in which the boiler is installed does not require a purpose provided air vent.

If the boiler is installed in a compartment, permanent air vents are required in the compartment, one at high level and one at low level, either direct to the outside air or to a room. Both high level and low level air vents must communicate with the same room or must be on the same wall to outside air. Both the high level and low level vent must each have a combined free area in accordance with Table 3.

If the boiler is installed in a compartment with a door, allow at least 25mm clearance between the front of the boiler and the door for air movement.

Boiler In Room

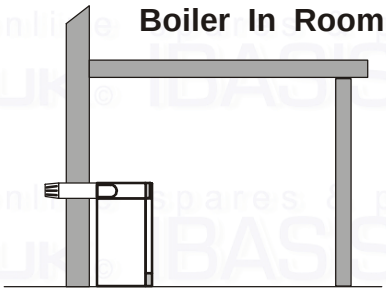

Balanced Flue No Combustion Air Inlet Required To Room

Boiler In Compartment

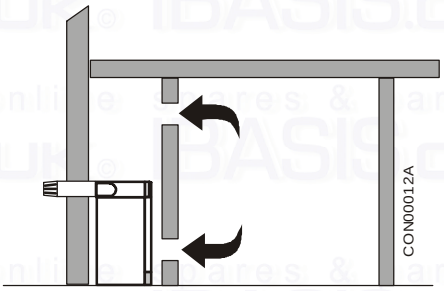

Balanced Flue Compartment Ventilated From Inside

1.5 Flue Systems & Terminal Location

Horizontal - Concentric (Left, Right or Rear).

The flue/terminal assembly supplied is suitable for a wall thickness of between 150mm and 400mm.

A flue/terminal assembly suitable for a wall thickness of up to 600mm is also available.

Both the flue/terminal assemblies are telescopic and the minimum lengths (150 mm/6 in) are achieved by cutting.

A 1m flue extension is available. Under no circumstances should the total flue length exceed:-

3.4m	40 to 70 models
2.4m	80 model
1.4m	90 model
1.0m	100 model

Vertical - Concentric.

3.4m	40 - 70 models Only

Where bends may be being used, the total flue length will be reduced, see Page 17 Item 11 for more details.

See separate Installation Instructions supplied with the flue.

Table 3

Compartment Ventilation		
Free Area cm sq.	High Level	Low Level
RS40	132	132
RS50	165	165
RS60	198	198
RS70	231	231
RS80	264	264
RS90	297	297
RS100	331	331

Note: If ventilating directly to outside, the figures shown in Table 3 can be halved.

Where a horizontal flue is sited less than 2m above a balcony, above ground, or above a flat roof to which people have access, a suitable terminal guard must be fitted. This serves two purposes, to protect the terminal against damage or interference and to protect passers-by. A terminal guard is available (Sales Code: PTERMGUARDEF), this should be fitted centrally about the terminal.

Note: Where a flue terminal is installed less than 1 metre from a plastic, or painted gutter, or 500mm from painted eaves, an aluminium shield 1 metre long, should be fitted to the underside of the gutter or painted surface. A suitable wall plate should be fitted to the painted wall surface of a mobile home.

IMPORTANT: It is absolutely ESSENTIAL, to ensure that products of combustion discharging from the terminal cannot re-enter the building, or any other adjacent building, through ventilators, windows, doors, natural air infiltration, or forced ventilation/air conditioning. If products of combustion are found to be re-entering any building, the appliance MUST be turned OFF IMMEDIATELY.

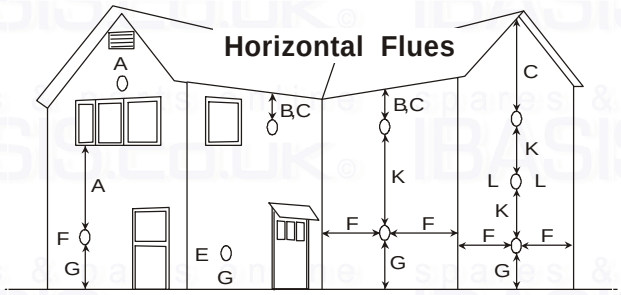

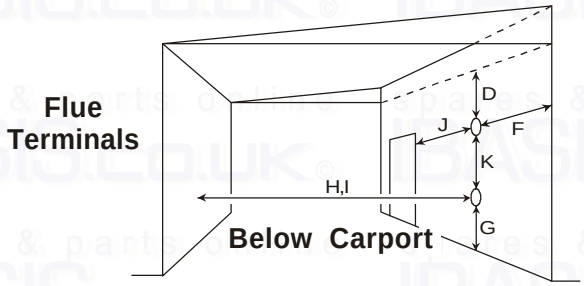

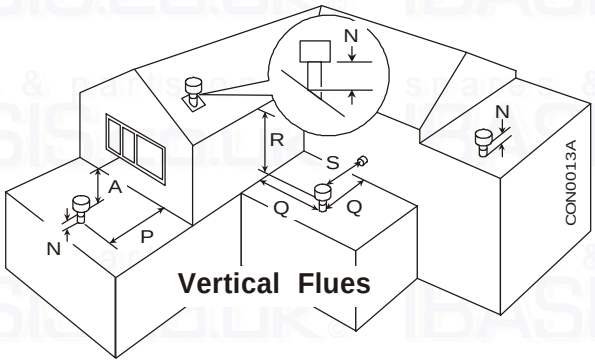

POSITION		MIN. DISTANCE mm TO EDGE OF TERMINAL
HORIZONTAL FLUES		
A	DIRECTLY BELOW AN OPENABLE WINDOW, AIR VENT, OR ANY OTHER VENTILATION OPENING	300
B	BELOW GUTTER, DRAIN/SOIL PIPE	75
C	BELOW EAVES	200
D	BELOW A BALCONY/CARPORT ROOF	200
E	FROM VERTICAL DRAIN PIPES AND SOIL PIPES	25
F	FROM INTERNAL OR EXTERNAL CORNERS	25
G	ABOVE ADJACENT GROUND OR BALCONY LEVEL	300
H	FROM A SURFACE FACING THE TERMINAL	600
I	FACING TERMINALS	1,200
J	FROM OPENING (DOOR/WINDOW) IN CARPORT INTO DWELLING	1,200
K	VERTICALLY FROM A TERMINAL ON THE SAME WALL	1,500
L	HORIZONTALLY FROM A TERMINAL ON THE SAME WALL	300
VERTICAL FLUES		
N	ABOVE ROOF LEVEL (TO BASE OF TERMINAL)	300
P	FROM ADJACENT WALL TO FLUE	210
Q	FROM INTERNAL CORNER TO FLUE	230
R	BELOW EAVES OR BALCONY	600
S	FROM FACING TERMINAL	1,200

1.6 The System

The boiler must be used on INDIRECT hot water systems only. It is suitable for use on open vented gravity domestic hot water/pumped central heating systems or, fully pumped systems which may be sealed or open vented.

Existing systems should be thoroughly cleansed prior to boiler installation.

The system should be designed so that the maximum static head does not exceed 30.5m and a minimum on fully pumped systems of 300mm. See Fig. 8.

Gravity domestic hot water circuits should have a minimum circulating head of 1.2m. See Fig. 7. Horizontal pipe runs should be kept to a minimum.

To prevent reverse circulation in the gravity circuit when the pump is running an injector tee is incorporated.

The pump should preferably be fitted in the flow, though installation in the return is acceptable providing care is taken to ensure air is not drawn into the system due to the negative pressure effects of the pump. Isolating valves must be fitted as close as possible to allow replacement without system draining.

Drain off taps should be fitted in the pipework close to the boiler and in the low points of the system. A drain point is also provided on the heat exchanger should the boiler need draining - see Fig. 17.

Combined Gravity Hot Water Pumped Central Heating Systems.

Where a cylinder thermostat and zone valve are used to control the temperature of the hot water it is recommended that a by-pass be installed in the gravity circuit. A suggested method of doing this is shown in Fig. 7. where the bathroom radiator is connected into the gravity circuit and is fitted with two lockshield valves. Mechanically operated thermostatic domestic hot water temperature control valves which allow the boiler to operate when the valve is closed or partially closed MUST NOT BE FITTED unless a bypass radiator is fitted.

Note: The boiler has one flow and two return connections. On combined gravity DHW/Pumped central heating a Tee will be needed in the flow which must be fitted directly to the connecting pipe provided.

Fully Pumped Systems

The pump must be wired directly to the terminal block (See Fig. 15) as it will allow the pump to be controlled by the over-run device. This will ensure that the pump will continue to run after boiler shut down thus preventing nuisance operation of the overheat thermostat.

If a three port diverter valve is used as shown in Figs.8 & 9, a by-pass is not necessary since one circuit is always open. Where a pair of two port valves are used, a by-pass is necessary. It should be fitted with a lockshield valve and be adjusted to maintain a minimum flow through the boiler of 4.5 litres/min (1 gal/min) see Figs. 8 & 9.
Systems fitted with controls which allow the boiler to operate when both the hot water and central heating circuits are closed i.e. mechanically operated thermostatic control valves, must be fitted with a by-pass circuit capable of:-

1. Dissipating a minimum of 1kW (3,400 Btu/h)
2. Maintaining a minimum water flow through the boiler of 9 litres/min (2 gal/min).

A suggested method of meeting these requirements by using a bathroom radiator fitted with two lockshield valves is shown in Figs. 8 & 9.

Diagrammatic layouts of a fully pumped system and a combined pumped central heating/gravity hot water system are shown in Figs. 7 & 8.

Sealed Systems (Fully Pumped)

Installation
The installation must comply with the requirements of BS 6798: 1987 and BS 5449: Pt 1. The British Gas publication "British Gas Specification for Domestic Wet Central Heating Systems" should also be consulted.

Safety Valve
A non-adjustable spring-loaded safety valve, preset to operate at 3 bar (45lbf/in²) shall be used. It must comply with BS 6759: Pt 1. and include a manual testing device. It shall be positioned in the flow pipe either horizontally or vertically upwards and close to the boiler. No shut-off valves are to be placed between the boiler and the safety valve. The valve should be installed into a discharge pipe which permits the safe discharge of steam and hot water such that no hazard to persons or damage to electrical components is caused.

Pressure Gauge
A pressure gauge incorporating a fill pressure indicator, covering the range 0 - 4 bar (60 lbf/in²) shall be fitted to the system. It should be connected to the system, preferably at the same point as the expansion vessel. Its location should be visible from the filling point.

Expansion Vessel
A diaphragm type expansion vessel to BS 4814: Pt 1. shall be fitted close to the inlet side of the pump. The connecting pipework should not be less than 15mm. Pipework connecting the expansion vessel should not incorporate valves of any sort. Methods of supporting the vessel are supplied by the vessel manufacturer. The nitrogen or air charge pressure of the expansion vessel shall not be less than the hydrostatic head, (height of the top point of the system above the expansion vessel).

To size the expansion vessel it is first necessary to calculate the volume of water in the system in litres. The following volumes may be used as a conservative guide to calculating the system volume.

Boiler Heat Exchanger:	6.5 litres
Small Bore Pipework:	1 litre per kW of system output
Micro Bore Pipework:	7 litres
Steel Panel Radiators:	8 litres per kW of system output
Low Water Capacity Radiators:	2 litres per kW of system output
Hot Water Cylinder:	2 litres

If the system is extended, the expansion vessel volume may have to be increased unless provision has been made for extension. Where a vessel of the calculated size is not available, the next available larger size should be used. The boiler flow temperature is controlled at approximately 82°C.

The vessel size can now be determined from the information in Table 4 where V = System volume in litres.

Vessel Charge Pressure (bar)	0.5	1.0
Initial System Pressure (bar)	1.0	1.0
Expansion Vessel Volume (litres)	V x 0.11	V x 0.087

Table 4.

Cylinder

The hot water cylinder must be an indirect coil type or a direct cylinder fitted with an immersion calorifier suitable for operating at a gauge pressure of 0.3 bar (5 lbf/in²) in excess of safety valve setting. Single feed indirect cylinders are not suitable for sealed systems.

Method of Make-up

Provision shall be made for replacing water loss from the system either:-

i) from a make-up vessel or tank mounted in a position higher than the top point of the system, and connected through a non-return valve to the system on the return side of the hot water cylinder or the return side of all heat emitters.
or

ii) where access to a make-up vessel would be difficult by using the mains top up method or a remote automatic pressurisation and make-up unit as shown in Fig. 10.

Mains Connection

There shall be no connection to the mains water supply or to the water storage tank which supplies domestic hot water even through a non-return valve, without the approval of the Local Water Authority.

Filling Point

The system shall be fitted with a filling point at low level which incorporates a stop valve to BS 1010 and a double check valve (approved by the National Water Council) to be fitted in this order from the system mains, see Fig. 10.

Circulation Pump Selection

The resistance through the heat exchanger when operating with a water flow rate producing an 11°C temperature rise at maximum boiler output are shown in Table 5. If other controls such as 3 position valves are used in the system, the resistance through them, quoted in their manufacturers literature must be taken into account. The pump may be fitted on either flow or return. It must be fitted with two isolating valves which are positioned as close to the pump as possible. Closing of any valve must always leave the open vent unobstructed. On fully pumped systems either return connection may be used.

Hydraulic Resistance Through KIngfisher Mf Range

Table 5 **Appliance Resistance**

Appliance Output BTU	Water Flow Rate L/Min.	Gravity Return mbar	Gravity Return m	Pumped Return mbar	Pumped Return m
40	15.2	20	0.2	30	0.31
50	19.1	32	0.33	50	0.51
60	23	48	0.49	73	0.74
70	26.8	63	0.64	98	1.00
80	30.5	80	0.82	132	1.35
90	34.4	100	1.02	162	1.65
100	38.2	128	1.3	215	2.19

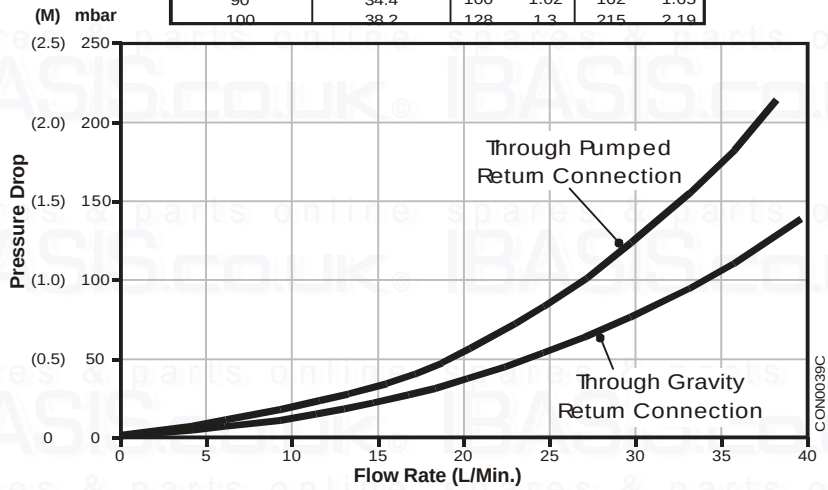

Fig. 7 & 8

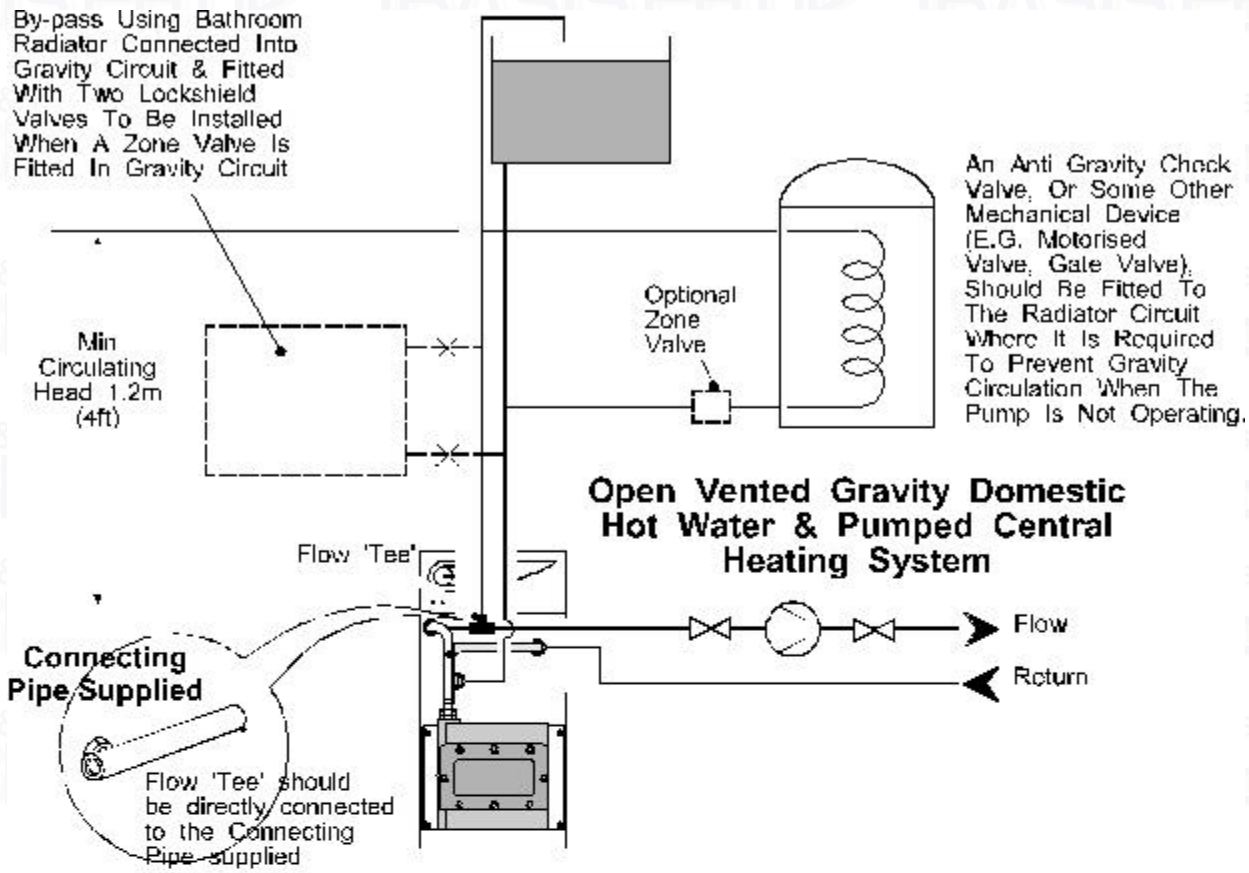
By-pass Using Bathroom Radiator Connected Into Gravity Circuit & Fitted With Two Lockshield Valves To Be Installed When A Zone Valve Is Fitted In Gravity Circuit
An Anti Gravity Check Valve, Or Some Other Mechanical Device (E.G. Motorised Valve, Gate Valve), Should Be Fitted To The Radiator Circuit Where It Is Required To Prevent Gravity Circulation When The Pump Is Not Operating.
Optional Zone Valve
Min Circulating Head 1.2m (4ft)
Open Vented Gravity Domestic Hot Water & Pumped Central Heating System
Flow 'Tee'
Flow
Return
Connecting Pipe Supplied
Flow 'Tee' should be directly connected to the Connecting Pipe supplied

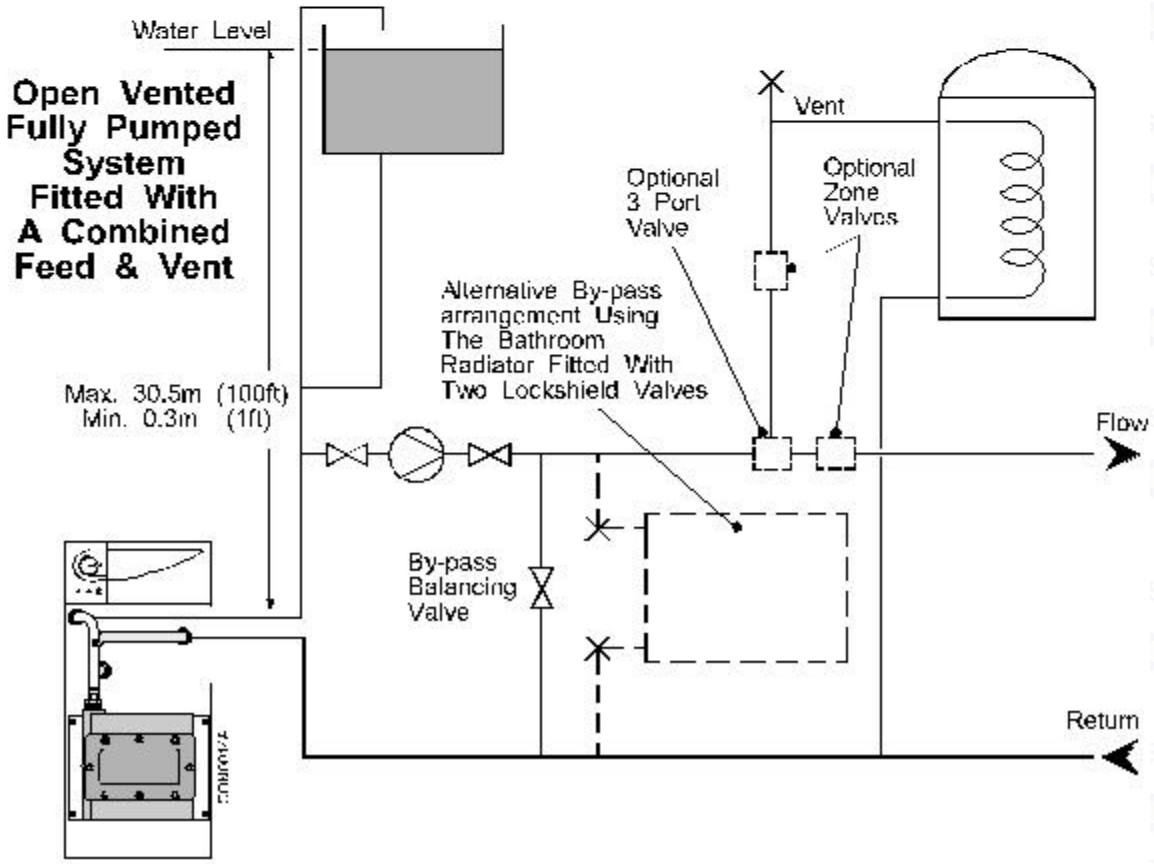
Water Level
Open Vented Fully Pumped System Fitted With A Combined Feed & Vent
Vent
Optional 3 Port Valve
Optional Zone Valves
Alternative By-pass arrangement Using The Bathroom Radiator Fitted With Two Lockshield Valves
Max. 30.5m (100ft)
Min. 0.3m (1ft)
Flow
By-pass Balancing Valve
Return

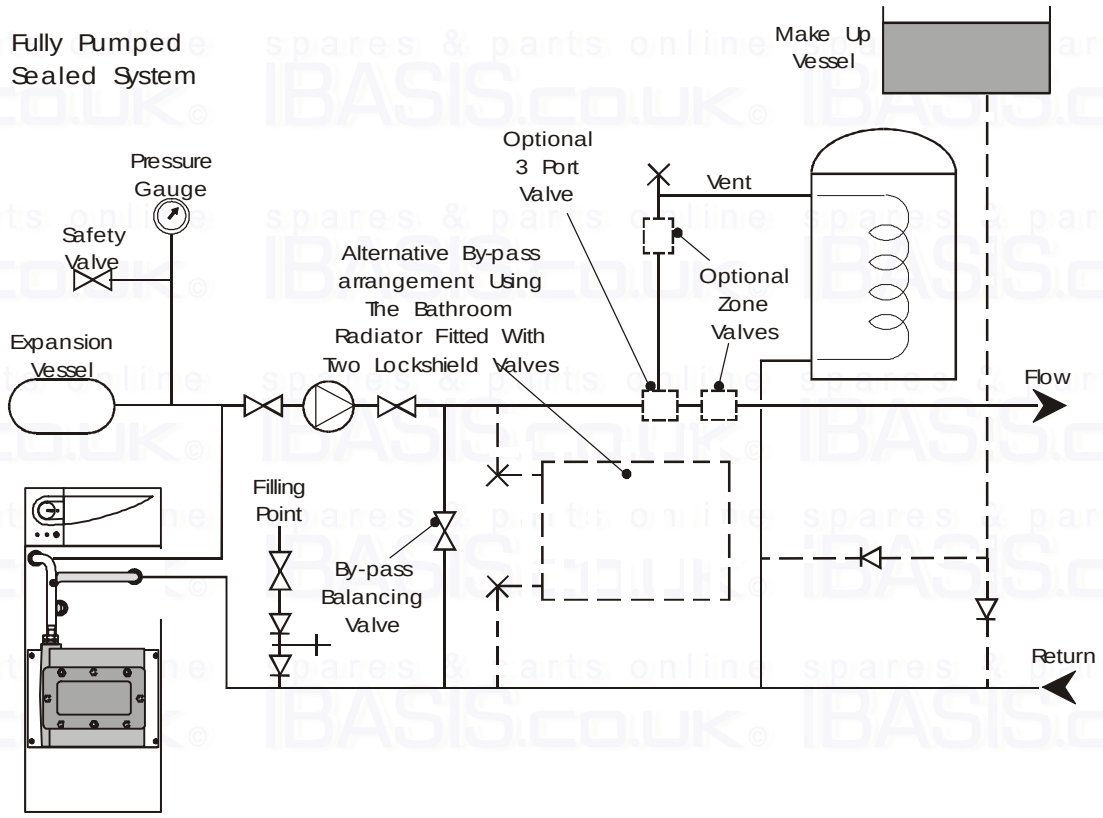
Fully Pumped
Sealed System
Make Up
Vessel
Optional
3 Port
Valve
Vent
Pressure
Gauge
Safety
Valve
Alternative By-pass
arrangement Using
The Bathroom
Radiator Fitted With
Two Lockshield Valves
Optional
Zone
Valves
Expansion
Vessel
Flow
Filling
Point
By-pass
Balancing
Valve
Return

Fig. 9

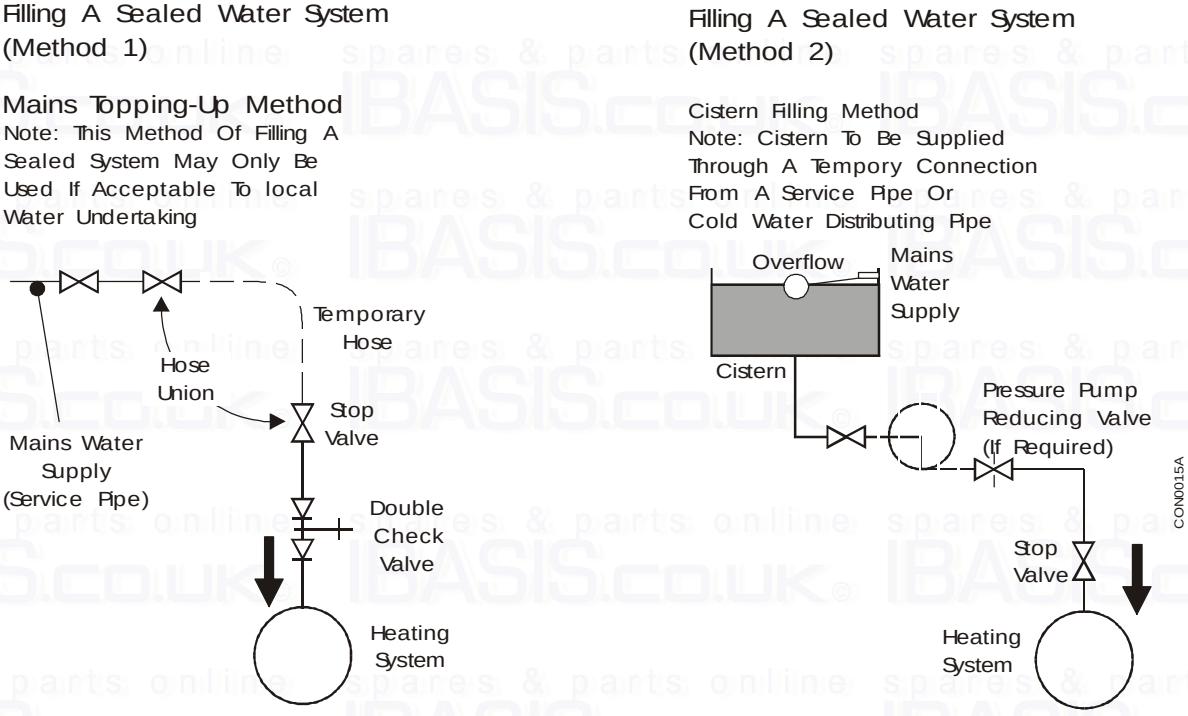
Filling A Sealed Water System
(Method 1)
Mains Topping-Up Method
Note: This Method Of Filling A
Sealed System May Only Be
Used If Acceptable To local
Water Undertaking
Temporary
Hose
Hose
Union
Stop
Valve
Mains Water
Supply
(Service Pipe)
Double
Check
Valve
Heating
System
Filling A Sealed Water System
(Method 2)
Cistern Filling Method
Note: Cistern To Be Supplied
Through A Tempory Connection
From A Service Pipe Or
Cold Water Distributing Pipe
Overflow
Mains
Water
Supply
Cistern
Pressure Pump
Reducing Valve
(If Required)
CON0015A
Stop
Valve
Heating
System

Fig. 10

2. Installation - Page 15

2.1 Install the boiler

These instructions assume you have decided on where the boiler will be located and the type of flue system to be used.

1. Carefully unpack the boiler. Remove and place aside the tailpipe/gravity stat kit and on CF boilers, the ancillary bag containing the top and rear blanking plates with seal.
2. Do not discard any packaging until all the items are accounted for.
3. Temporarily position the boiler to ensure where required, the top cover touches the wall. This sets the minimum rear clearance for the pipework. Mark the position on the floor.
4. Remove the plinth - 2 screws.
5. Remove the front door - 2 screws, unhook and lift off.
6. Remove the controls panel - open flap, 1 screw unhook and lift away.
7. Remove the top cover - 2 screws, pull forward and lift off.

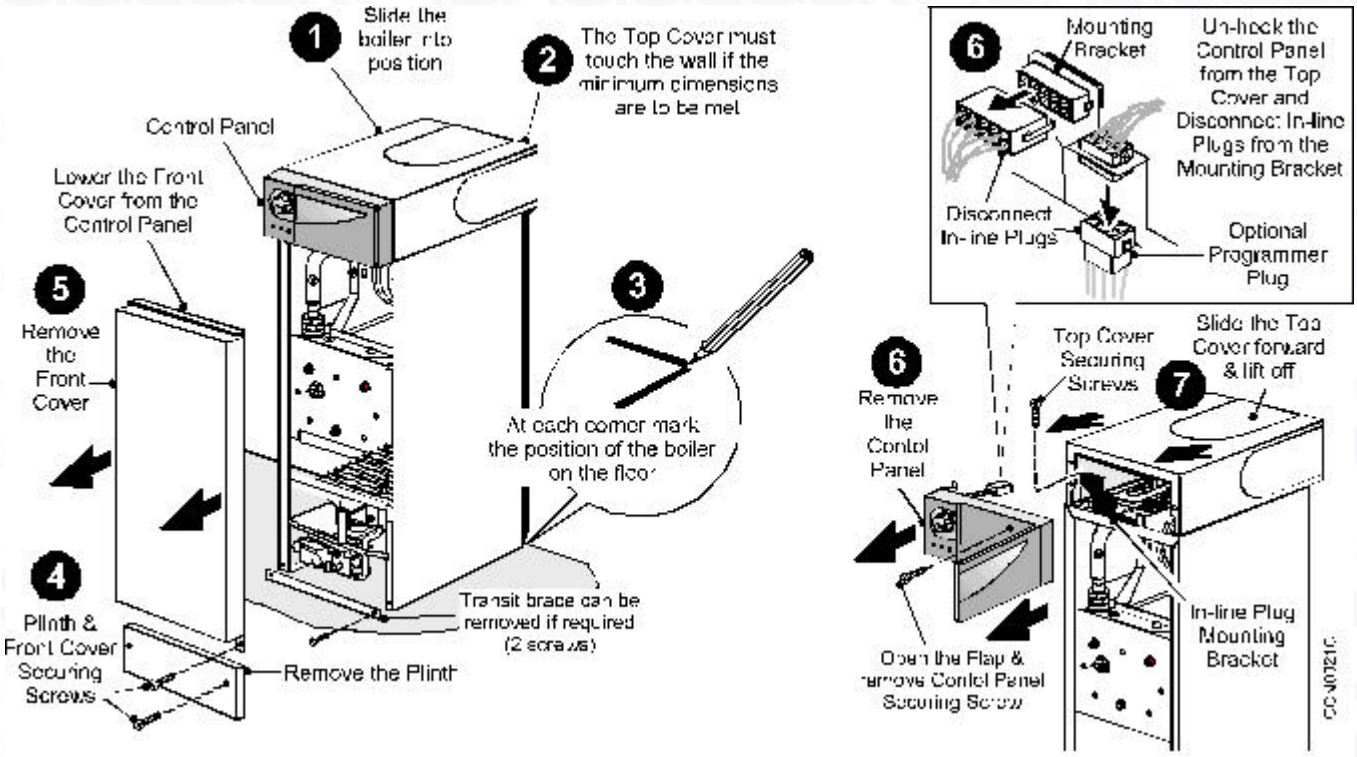

2.2 Install the flue

Install the flue type as required.

Conventional Flue:

1. Loosen the 4 screws securing the down draught diverter to the boiler, line the diverter up with the flue and fully tighten the screws.

   Note: From its fully rearward position the diverter will move forward 50mm.

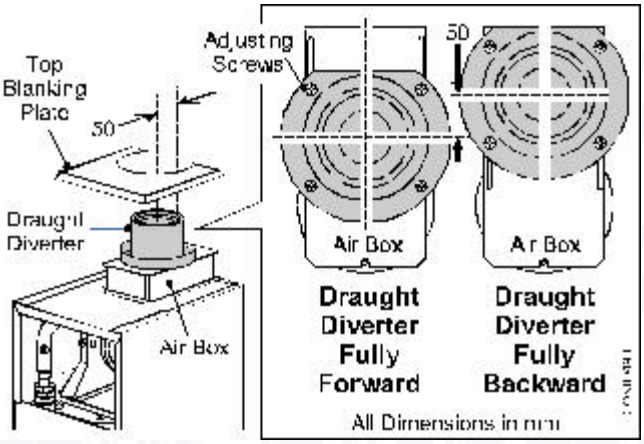

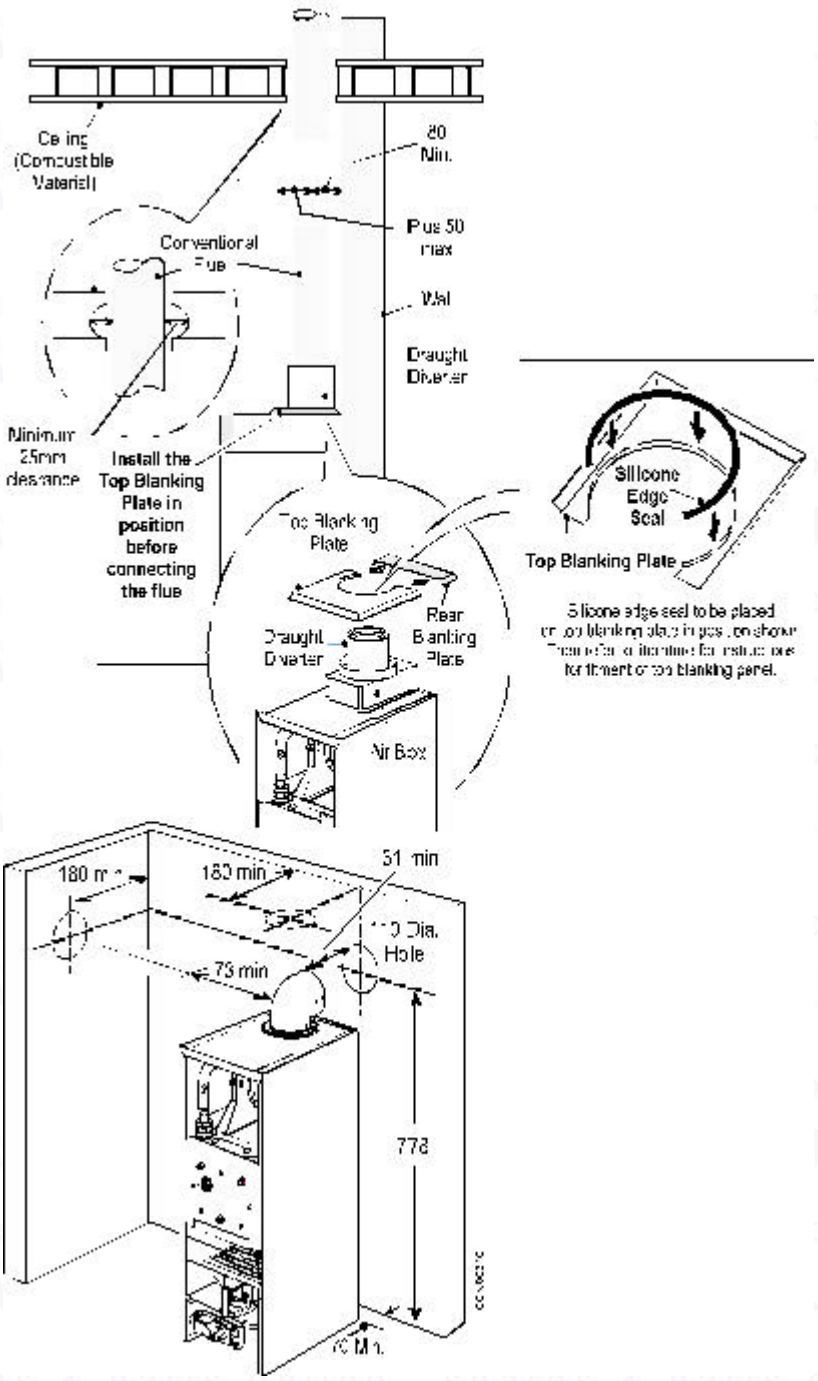

2. Attach the flue to the draught diverter. Attach the seal as shown and re-fit the top blanking plate.

   If the diverter is in the fully forward position fit the rear blanking plate supplied.

   This product is fitted with a products discharge safety device (TTB) which must not be taken out of operation at any time. The component is fitted to ensure that any blockage or partial blockage of the flue does not result in combustion products discharging into the room.

Balanced Flue:

1. Mark the flue outlet hole position on the wall as illustrated.

   Note: Ensure that the correct allowance is made for side outlet when the boiler is not being pushed fully back.

2. Carefully cut hole through wall.

Maximum flue lengths are as follows:

40 - 70 models - 3.4m
80 model - 2.4m
90 model - 1.4m
100 model - 1.0m

These are for rear or side flue applications see Page 17 Fig. 13.

3. Determine dimension X +20mm See Fig.13.
4. Extend telescopic flue to the required length, minimum 20mm overlap.
5. Drill through the pilot hole and secure with a self tapping screw.
6. Wrap tape around the joint on the outer duct to seal the flue, slide drip ring into position to coincide with the air gap in the wall cavity.
7. Slide the flue through the hole until it stops on the pin.

8. The boiler is supplied with the flue elbow set for the rear. For side outlet slacken the screws, turn the elbow as required and retighten screws.
   Note: Ensure that the seals are still correctly located.
9. Slide the flue back until it engages in the elbow bayonet connection, twist clockwise to lock.
10. Drill through pilot hole and lock flue in position using the self tapping screw provided.
11. Make good the wall around the flue, both inside and outside.

For optional extras refer to Page 38 & 39. If a Horizontal Extension is required this MUST be combined with a Standard Flue as shown in the Maximum Flue Length Guide.

If an in-line bend is required in the flue the following rules apply:-
A 90° in-line bend is equivalent to a 1m length of flue.
A 135° in-line bend is equivalent to a ½m length of flue.

The maximum equivalent flue resistance allowed when using bends is:-
40 - 70 models = 3.4m.
80 model = 2.4m.
90 - 100 models - No bends allowed.

Note: For flue lengths less than the minimum telescopic length, the tubes can be cut to suit. Ensure that the same length is removed from the inner and outer tubes to maintain a minimum 20mm overlap.

For further information see Publication No. 560096 - 'Combination Flues'.

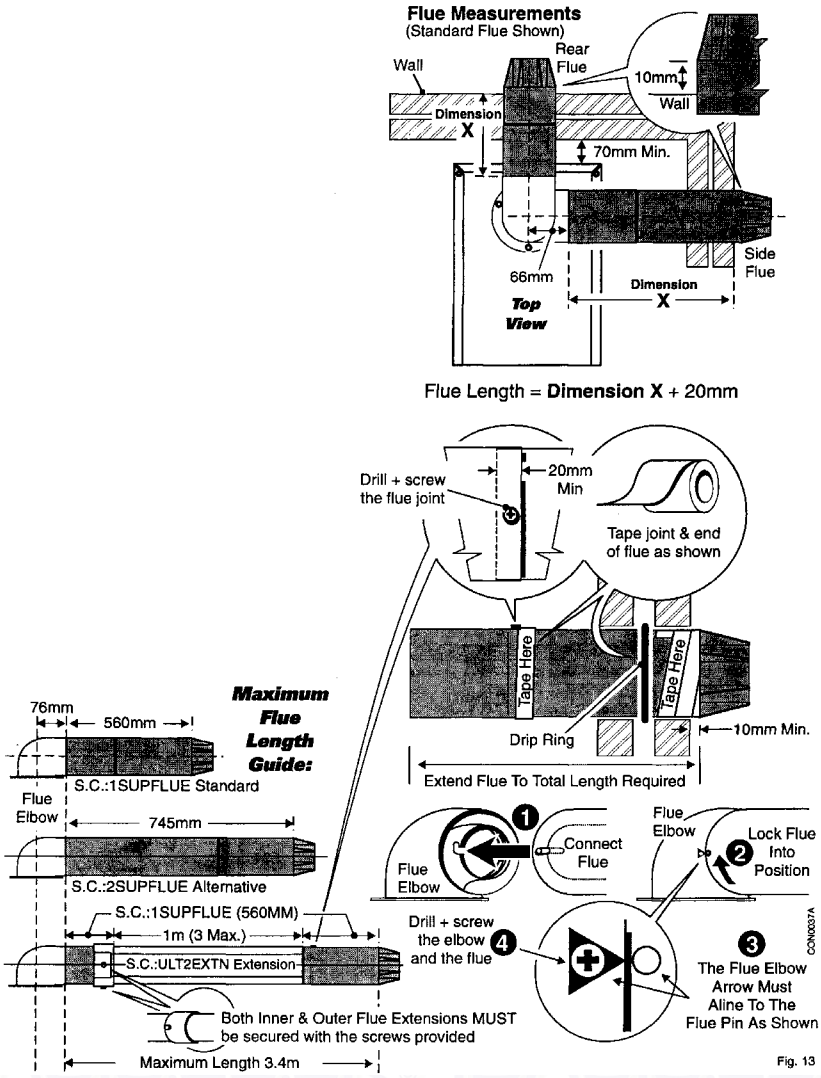

Fig. 13

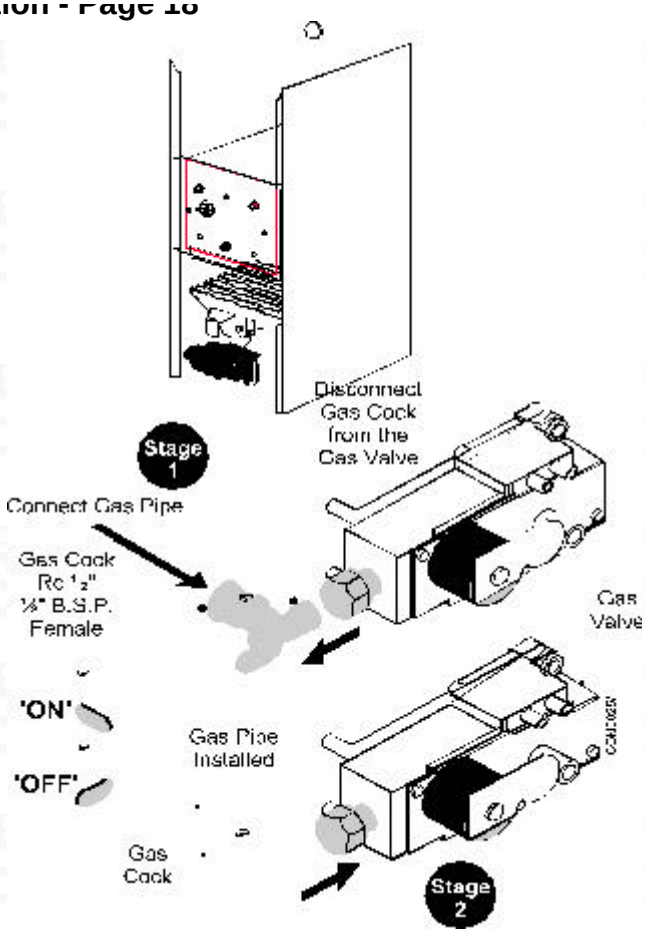

2.3 Connect the Gas Supply

1. Ensure that the gas supply is isolated.
2. Disconnect the gas cock from the gas valve.
3. Connect the gas supply to the gas cock using a suitable adaptor.

Important:
Do not solder the fitting whilst assembled to the gas cock.

The pipe diameter required will depend on the boiler model and the pipe length from the gas meter. Ensure that the gas supply pipe is selected in accordance with BS 6891 so that an adequate gas supply to the boiler is provided.

4. Connect the gas cock to the gas valve.

Do not turn the gas supply on at this stage.

2.4 Connect the Water System

When attaching the standard pipe connecting kit to the boiler please note that the seal is made by use of an 'O' ring, therefore some pipe movement will be evident even though a water tight seal has been achieved. Excessive force is not necessary and could result in damage to the appliance.

1. Connect system pipework to the boiler, compression fittings should be used. Arrange pipework to ensure correct venting of pipes and boiler. On gravity systems a tee is required in the flow which must be fitted directly to the connecting pipe supplied. **Note:** Drain off taps should be installed at the lowest points in the system.
2. If on a Gravity DHW system position the overheat thermostat as shown.
3. To do this - unscrew the overheat thermostat from the flow pipe and re-attach as shown using the bracket and screw found in the tail pipe/gravity stat kit.

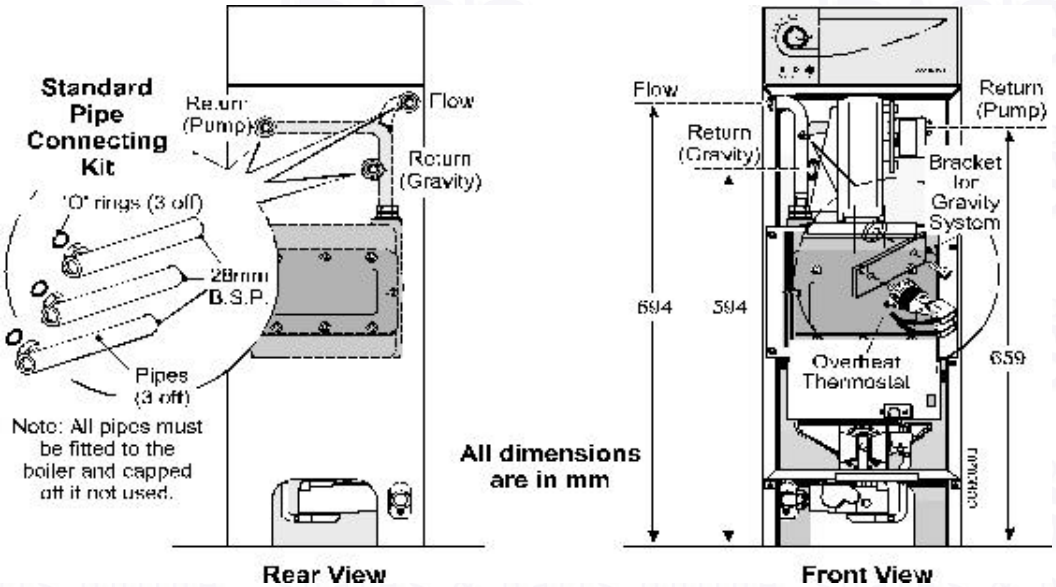

Fig. 14

2.5 Connect the Power Supply Cable

1. Cable clamping is provided on the front of the controls panel. Feed the cables up and over the back of the chassis, through the clamp and into the terminal connection.

   Note: When connecting the power supply cable, ensure that the length of the earth wire is such, that if the power supply cable pulls out of the cable clamp the live and neutral wires become taut before the earth wire.

   If fitting the optional programmer, see Page 20 for wiring details.

2. Connect the wires as follows;

   Gravity DHW/Pumped CH Systems

   a. Fit a link between terminals MAINS 'SwL' and MAINS 'L'.
   b. Switched live from external gravity DHW control circuit to MAINS 'SwL'.
   c. Neutral to MAINS 'N'.
   d. Earth to MAINS 'E'.
   e. The pump should be wired externally.

   Fully Pumped Systems

   a. Permanent live to terminal MAINS 'L'
   b. Switched live from external controls to MAINS 'SwL'.
   c. Neutral to MAINS 'N'.
   d. Earth to MAINS 'E'.
   e. Pump to PUMP 'L, N, E'.

   Open Vented Fully Pumped Systems

   The boiler is fitted as standard with an overheat thermostat and pump overrun device which requires a permanent live to the boiler. This is the recommended installation method. However, in replacement situations where a permanent live is not available, it is possible to wire the boiler with
   3 core cable as follows, providing the system has a separate cold feed and vent pipes (close coupling is acceptable) see BS 5449 for further details.

   a. Re-position the overheat thermostat to Gravity DHW position as explained under 2.4, page 18.
   b. Switched live from external control circuit to MAINS 'SwL'.
   c. Fit a link between terminals MAINS 'SwL' and MAINS 'L'
   d. Neutral to MAINS 'N'.
   e. Earth to MAINS 'E'.
   f. The pump should be wired externally.

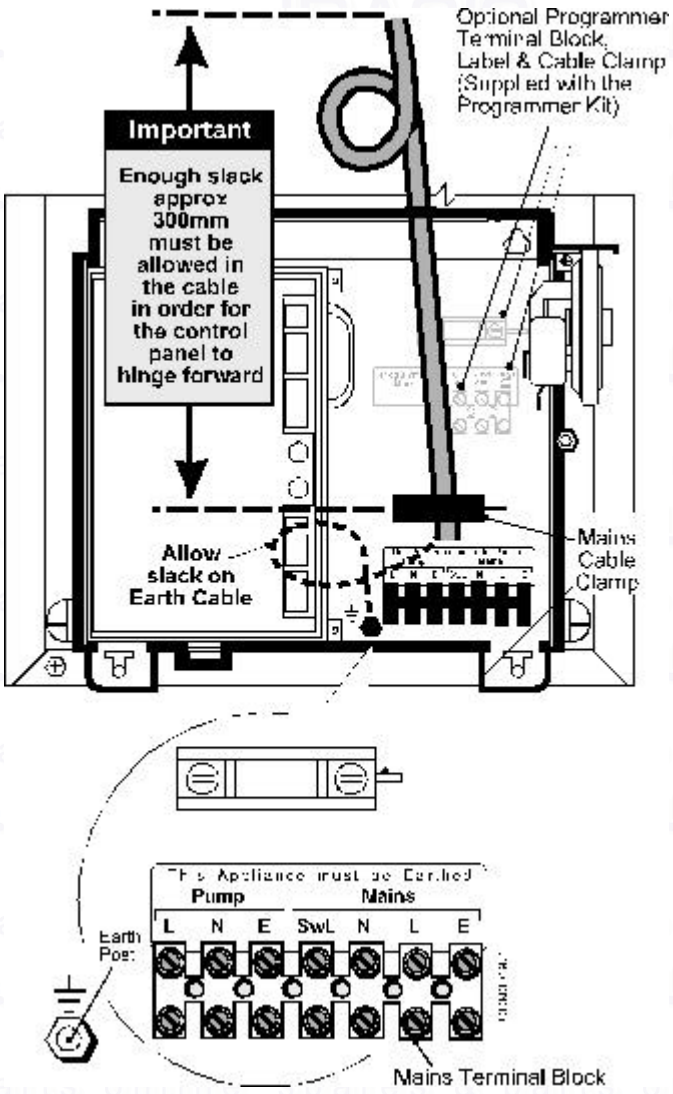

Fig. 15

3. Take up excess slack in the cables between the terminal block and the cable clamp, then tighten the cable clamp screws.
   Ensure sufficient slack is available to the cable clamps to allow the control panel to hinge freely. Check by opening the control panel.
   If fitting the optional Potterton timer go to section 2.6 before performing steps 4 and 5 below.
4. Secure the controls assembly to the chassis using the screw previously removed.
5. Carry out preliminary electrical system checks i.e. Earth Continuity, Short Circuit, Polarity and Resistance to Earth.

   Frost Thermostat:
   If a Frost Thermostat is to be fitted, the connections should be made in the wiring external to the boiler. Refer to the wiring instructions with the thermostat.

   Do not switch on the electricity supply at this stage.

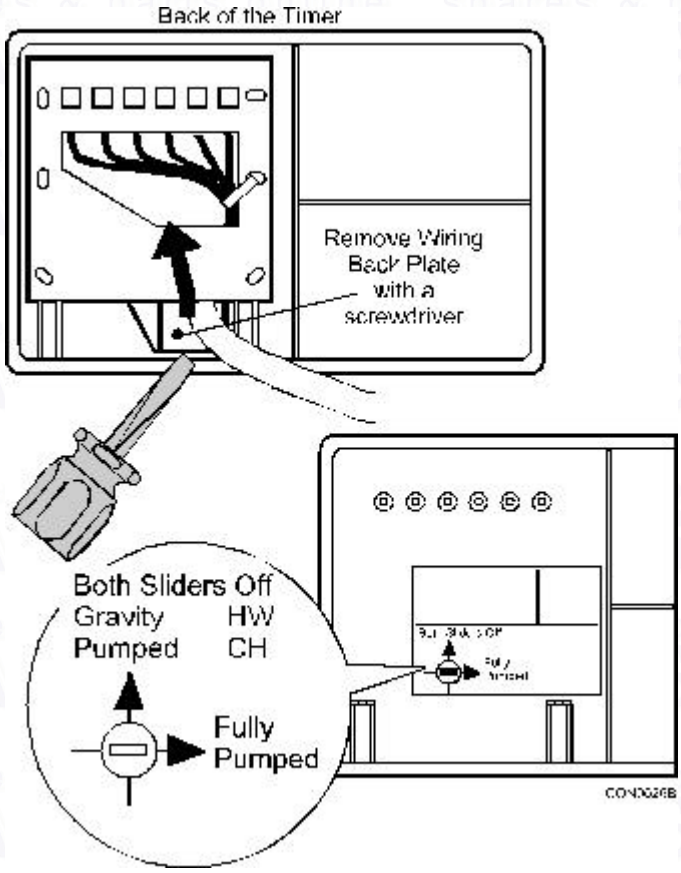

2.6 Install the Optional Programmer

Read this First
The programmer is supplied with the selector set to operate for fully pumped systems.

The wiring backplate must be removed before the selector can be adjusted.

If a gravity hot water/pumped central heating system incorporates full control by means of a cylinder thermostat and motorised valve, the selector should be set to the fully pumped position.

For systems incorporating gravity hot water/pumped central heating, the selector should be adjusted as follows:

1. Set both sliders to the OFF position.
2. On the reverse of the control use a small flat screwdriver to turn the selector anti-clockwise through 90°.

To Install the Programmer
1. Carefully remove the blanking panel from the facia.
2. Connect permanent live, neutral and earth to boiler terminals - Mains 'L', 'N' & 'E'.
3. Connect the programmer harness to the terminal block as shown.
4. From the terminals marked 'CH out', 'DHW out' & 'DHW off out' connect wiring to secondary controls as appropriate. Ensure that a switched live returns to the boiler and is connected to the boiler terminal block marked Mains 'SwL'.
5. Locate the programmer into the cut out and secure using the screws provided.
6. Connect the programmer wiring harness to the terminal block as shown.

Important

If the batteries in the programmer are to be replaced they should be safely disposed of as they contain hazardous materials.

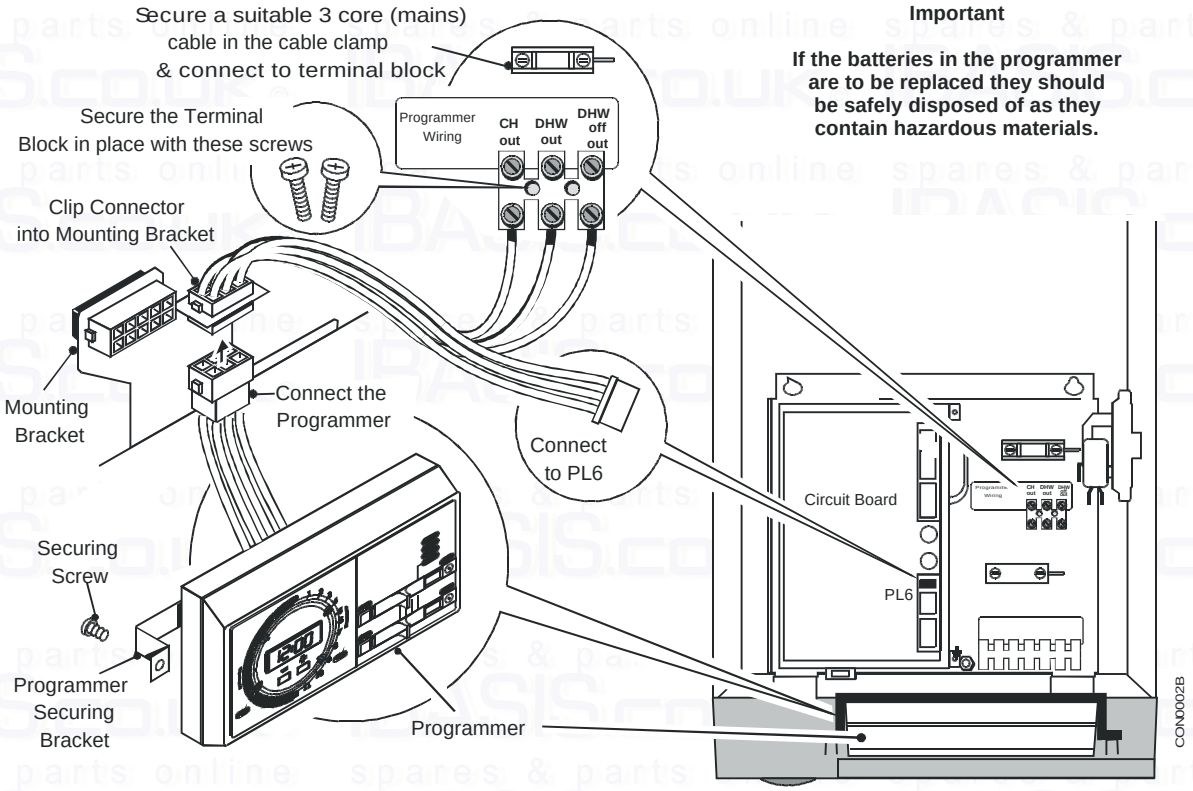

Fi8g. 16

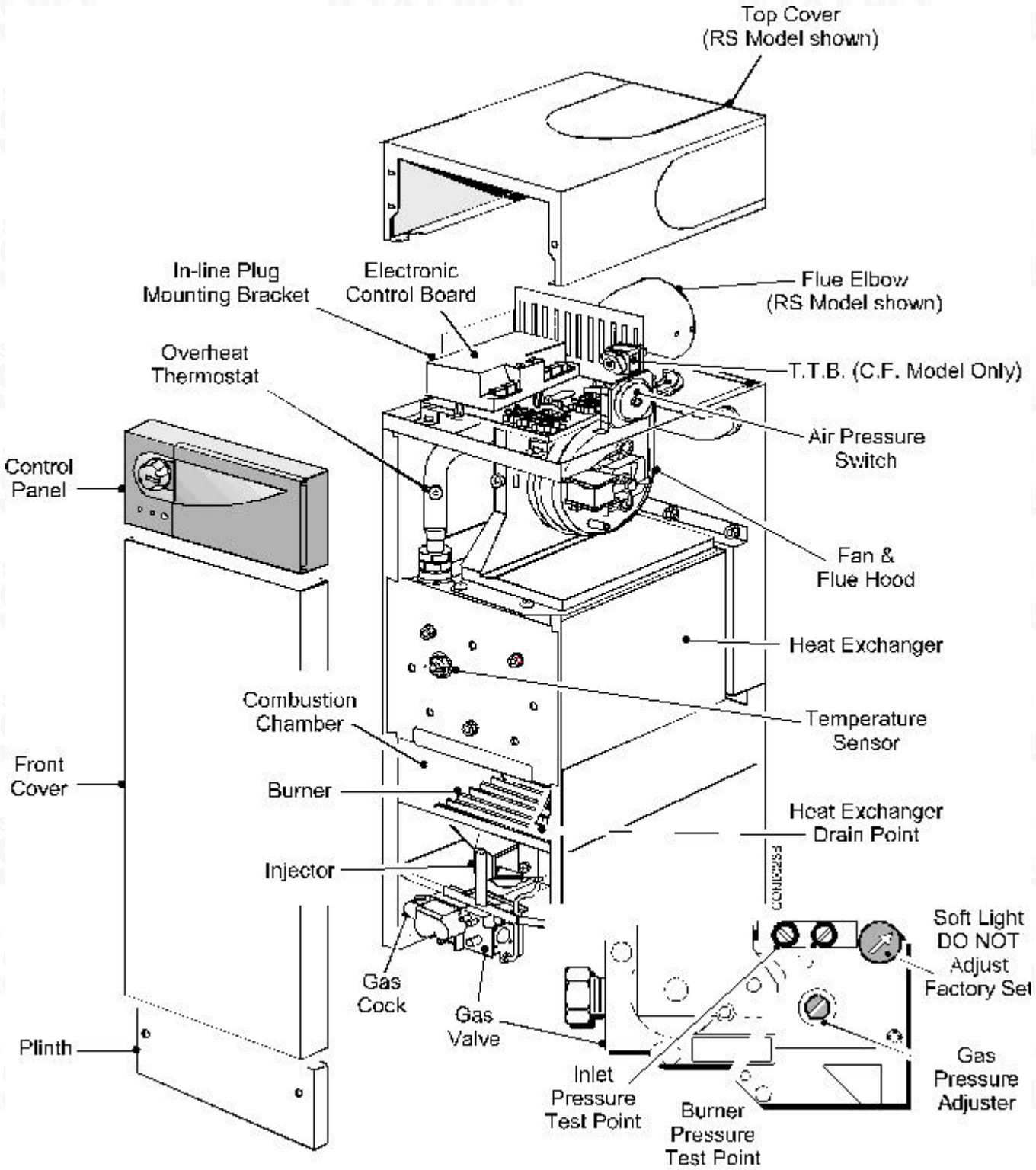

Fig. 17

Important
The commissioning and boiler adjustment must only be carried out by a suitably qualified person. Potterton Myson Ltd. offer this service on a chargeable basis.

Important
When checking for gas soundness open all windows and doors in the room.
Extinguish all naked lights, cigarettes, pipes, etc.

3.1 Commission the Boiler (tick box when done)

Open Vented Systems - Remove the pump and flush the system thoroughly with cold water. Re-fit the pump. Fill and vent the system then check for leaks. ☐

Sealed Systems - The system can be filled using a sealed system filler pump with a break tank or by any other method approved by the Local Water Authority. Refer to Section 1.6, 'The System' on Page 11 of these instructions.

Remove the pump and flush the system thoroughly with cold water. Re-fit the pump. Fill and vent the system until the pressure gauge registers 1.5 bar (21.5 lbf/in²) and check for leaks. Raise the pressure until the safety valve lifts, this should occur within ± 0.3 bar of the preset lift pressure of 3 bar. Release water to attain the correct cold fill pressure. ☐

Step by Step Commissioning

1 The whole of the gas installation must be checked for soundness and purged in accordance with BS 6891. ☐

2 Ensure the system has been flushed, is full of water and that the pump, radiator and any other isolating valves are open. ☐

3 On Gravity DHW systems check that the overheat thermostat is fitted correctly. See Fig. 14 on Page 18. ☐

4 Check the water system for leaks and rectify as necessary. ☐

5 Re-fit the front cover, plinth, top cover and controls panel. ☐

6 Set the rotary boiler switch on the user controls to 'O' Stand-by. ☐

7 If a programmer is fitted, set to the 'Off' position. ☐

8 Turn the boiler gas service cock to the 'On' position and then turn On the main gas supply. ☐

9 Preliminary electrical system checks must be carried out. They are:- Earth Continuity, Short Circuit, Polarity & Resistance to Earth. ☐

10 Switch On the main electricity supply at the isolating switch or plug and socket. ☐

11 If a programmer is fitted set it to the 'On' position and check that the room and cylinder thermostats, where fitted are set to high temperatures. ☐

12 The fan will be energised and after a short period the automatic spark will light the pilot. When the pilot flame is established the main burner will ignite and the Green 'Flame' led on the control panel will illuminate. ☐

Note: On initial lighting, pilot ignition may be delayed due to the presence of air in the gas supply.

13 With the main burner running, check for gas soundness around the boiler using leak detection fluid. ☐

14 Allow the system to reach maximum working temperature and examine for leaks. Set the boiler switch to 'O' and drain the system whilst still hot. ☐

Note: Should the boiler fail to operate correctly refer to the Fault Finding Guide on Page 32, and the boiler wiring diagram on Page 30 for further information.

15 Re-fill and vent the system making a final check for leaks. ☐

On sealed systems adjust to the correct cold fill pressure. Set the pressure gauge pointer to the system design pressure. ☐

If a by-pass circuit is fitted the by-pass valve should be adjusted with the boiler operating under minimum load conditions to maintain sufficient water flow through the boiler to ensure that the overheat thermostat does not operate under normal conditions. ☐

3.2 Final Adjustments

1 Use a pressure gauge to check the inlet and burner pressures. See the Data Badge for figures. ☐

2 Turn the boiler on and allow to run for 10 minutes. ☐

3 Check that the inlet pressure is 20mbar with the boiler running. ☐

4 Check that the burner pressure is in accordance with the information on the boiler data badge. ☐

5 If burner pressure adjustment is required turn the pressure adjusting screw anti - clockwise to increase pressure or clockwise to decrease. ☐

6 Check at the gas meter that the gas rate is correct. ☐

7 Shut down the boiler, remove the pressure gauges, re-fit the screws and check for gas soundness. ☐

8 Stick the self adhesive arrow (from the literature pack) onto the data badge to indicate the appropriate burner setting pressure. ☐

Control Thermostat
At its minimum and maximum settings, the thermostat should control the water flow temperature at approximately 55°C - 82°C. ☐

Set the temperature control knob to 'O' Standby and check that the main burner shuts down.

Pilot Burner
The pilot is pre-set and no adjustment is required. When lit the pilot flame envelope should just cover the electrode tip. If the pilot flame is not as described, replace as covered in Section 4.6 - Servicing & Replacement of Parts. ☐ ☐

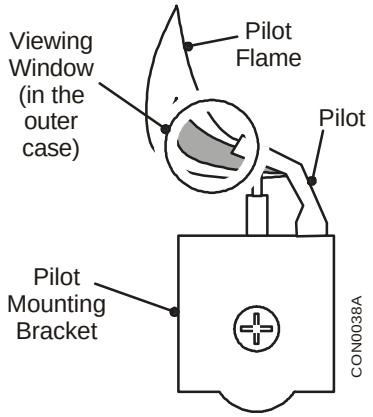

Fig. 18

Overheat Thermostat
The overheat thermostat is pre-set and no adjustment is possible. It will require manual re-setting if an overheat condition occurs (the Red LED will be illuminated). The re-set button is located on the controls assembly - repeated shutdown by this device should be investigated further and the fault eliminated. ☐

Products Discharge Safety Device (TTB) CF Only
This component is pre-set - no adjustment is possible. In the case of flue blockage this device will operate and the boiler will go to lockout (The red LED will be illuminated). The reset button is located on the controls assembly - repeated shutdown by this device should be investigated further and fault eliminated. ☐

Other Boiler Controls
No further setting or checking is necessary as all boiler mounted controls are designed so that if a fault should occur they will fail safe. ☐

External Controls
Check that any other external controls connected in the system, such as clocks or thermostats are correctly set and control the boiler as required. ☐

3.3 Instruct the User

On completion of the installation, the installer should demonstrate the operation of the boiler and its associated controls. Also hand over all the instructions. ☐

3.4 Advise the User

1 If a programmer is fitted set the time and programme the required settings. Refer to the programmer instructions. ☐

2 Hand the Instructions for Use, these Installation & Service Instructions (and the programmer instructions) to the User and instruct in the safe operation of the boiler and controls. ☐

3 Advise the User of the precautions necessary to prevent damage to the system and to the building in the event of the system remaining inoperative during frost conditions. Refer to the User's Instructions for further details ☐

4 Advise the User that for continued efficient and safe operation of the boiler it is important that adequate servicing is carried out at least once a year by a Potterton Service Engineer or a C.O.R.G.I. Registered Installer. ☐

5 Leave a permanent card attached to the boiler giving: ☐
   a. Name and address of installer.
   b. Date of installation.
   c. A wiring diagram of the external control circuit.

Read these: To ensure continued efficient operation of the appliance, it is recommended that it is checked and cleaned as necessary at regular intervals.

The frequency of servicing will depend upon the particular installation conditions and usage but in general once per year should be adequate.

It is the law that any service work must be carried out by a competent person who is C.O.R.G.I. Registered.

Before servicing, fire the appliance and check that the flames are blue. Yellow flame and excessive lifting indicate poor combustion.

WARNING: Before commencing work turn the temperature control knob to 'O' Stand-by and allow the appliance to cool, isolate the electricity supply.

If the gas valve is to be removed turn off the gas supply at the appliance service cock.

IMPORTANT: Always test for gas soundness after completing any servicing of gas carrying components and carry out functional checks of controls.

IMPORTANT: Ensure that the outer white case is correctly fitted and that the sealing strip fitted to the door is forming a tight seal with the boiler casing.

Flue gas analysis points are provided as follows:- RS Models: Either side of the flue elbow.
CF Models: On the Draught Diverter.

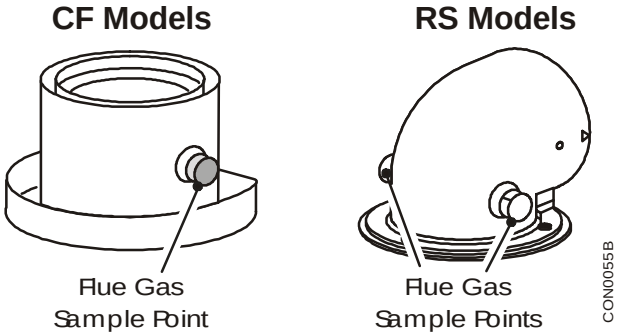

Notes on Cleaning Boiler Components

Heat Exchanger
After performing operations 4.1, 4.6 & 4.8 place a sheet of paper under the heat exchanger then using a flat blade tool (Part No. 907736), scrape the flueway fin surfaces in a downward movement. This will ensure that most of the deposits will be collected on the paper.

Burner
Brush the burner top and check that the flame ports are clear. Any blockage may be removed with a fine wire brush. Turn the burner upside down and tap gently to remove any debris (Protect the electrode).

Electrode
If the electrode requires cleaning wipe the surface using a solvent such as methylated spirits.

Main Injector
Omit this operation if the gas rate is correct, otherwise clean by blowing through. Do NOT clear the injector with a pin or wire.

Fan Assembly
Examine the fan impellor and carefully clean if necessary using a soft brush.

Flue
Inspect the flue terminal and flue/air tube for blockage and integrity, rectify if necessary.

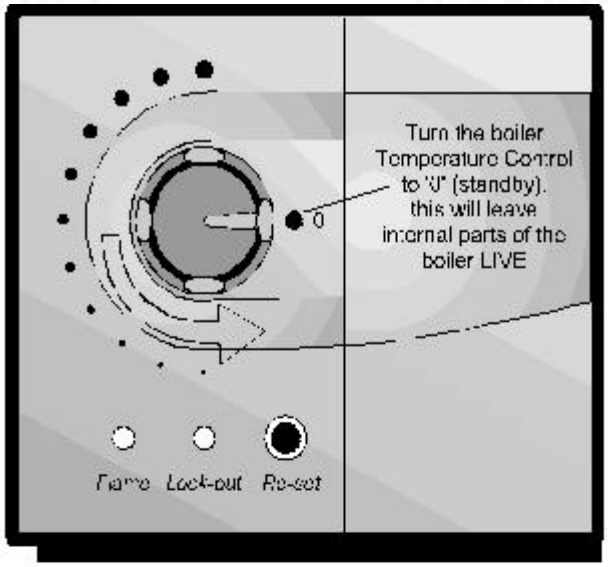

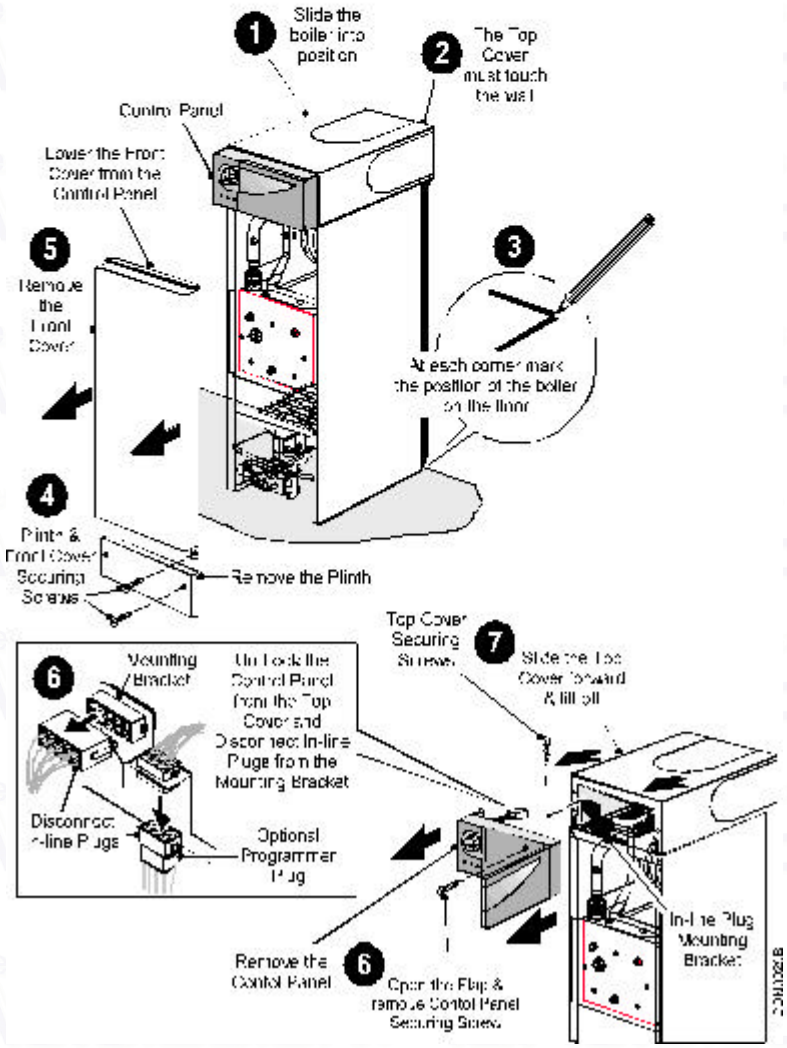

4.1 General Access

Warning: Before attempting to remove any component from the appliance first disconnect the mains electricity supply by removing the plug from the wall socket or by switching off the appliance at the external isolating switch.

Notes: The 'O' (stand-by) position on the boiler temperature control will leave parts of the boiler Live.

If the appliance gas valve is to be removed it will be necessary to isolate the gas supply at the appliance isolating valve.

Important: After removal or replacement of any gas carrying component a test for gas soundness must be made and functional check of the controls carried out.

Re-assemble all parts in reverse order.

1. Remove the plinth - 2 screws.
2. Remove the front cover - 2 screws, lower and lift away.
3. Remove the controls panel - open flap, remove screw, unhook, disconnect the in-line connector and lift away.
4. Remove the top cover - 2 screws, pull forward and lift off. (Top blanking plate should be removed - CF only).
5. For better access, the controls tray can slide forward.
   a. Loosen 2 screws at front of tray.
   b. Slide tray forward until rear of tray reaches front.
   c. Tilt tray up and pull out.
   d. Carefully slide wires to either side of tray.
   e. Place rear hole slots into screws loosened in a.

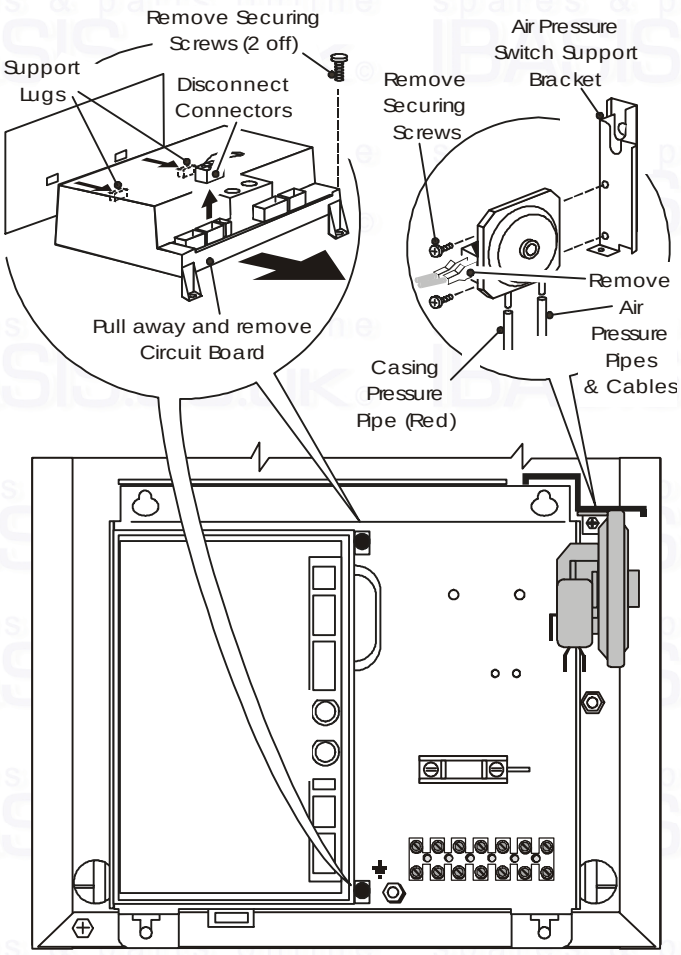

4.2 Electronic Control Board

- Gain General Access - See 4.1
  For better access of controls tray See 4.1 Note 5.

1. Disconnect all connectors and wires, unscrew the two securing screws and remove the board.
2. On re-assembly refer to the wiring diagram when re-connecting wires and connectors.

4.3 Air Pressure Switch

- Gain General Access - See 4.1

1. Remove the securing screws and allow the control panel to pivot forwards - see 4.1 Note 5.
2. Note the wire connections and disconnect the wires to the air pressure switch.
3. Remove the screws securing the air pressure switch to the bracket.
4. Note the tube connections and remove the tubes from the switch.
5. Re-assemble in reverse order.

4.4 Temperature Sensor

- Gain General Access - See 4.1

1. Disconnect the wires from the sensor.
2. Depress the clips on the outside of the sensor and pull it clear of the heat exchanger.
3. Re-assemble in reverse order, use fresh conducting paste.

4.5 Overheat Thermostat

- Gain General Access - See 4.1

1. Disconnect the wires from the thermostat.
2. Unscrew the thermostat from the pipe.
3. Re-assemble in reverse order.

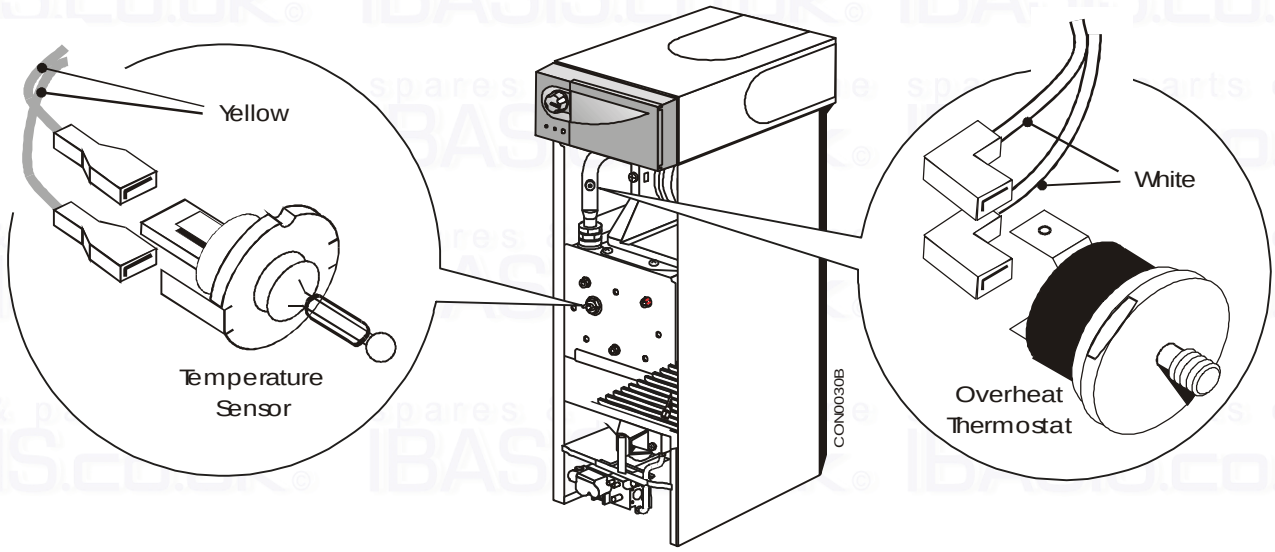

4.6 Burner, Gas Valve, Injector & Electrode

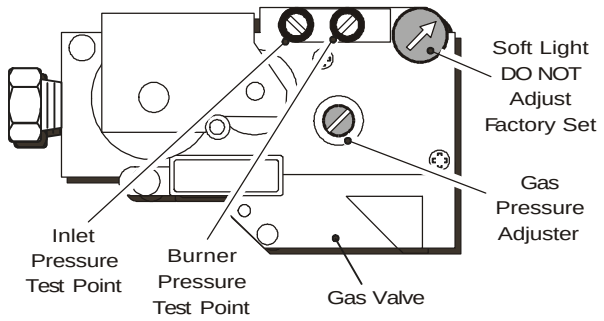

- Gain General Access - See 4.1

1. Disconnect the gas cock from the gas valve.
2. Disconnect the wiring from the gas valve.
3. Remove the combustion chamber cover - 2 screws.
4. Remove the gas valve/burner assembly - 2 screws.
5. Pull the assembly forwards and remove the electrode as follows:-
   Hold the electrode wire, push in and pull down at the same time and the electrode will disconnect itself.
6. Remove pilot tube from valve and pilot.
7. Disconnect the gas valve from the burner - 3 screws. Use a new 'O' ring on re-assembly.
8. Re-assemble in reverse order. When refitting the electrode ensure that it has clicked into position.

Injector: Use a 13mm (A/F) or ½" (A/F) socket spanner to remove the injector, use a new sealing washer on re-assembly.

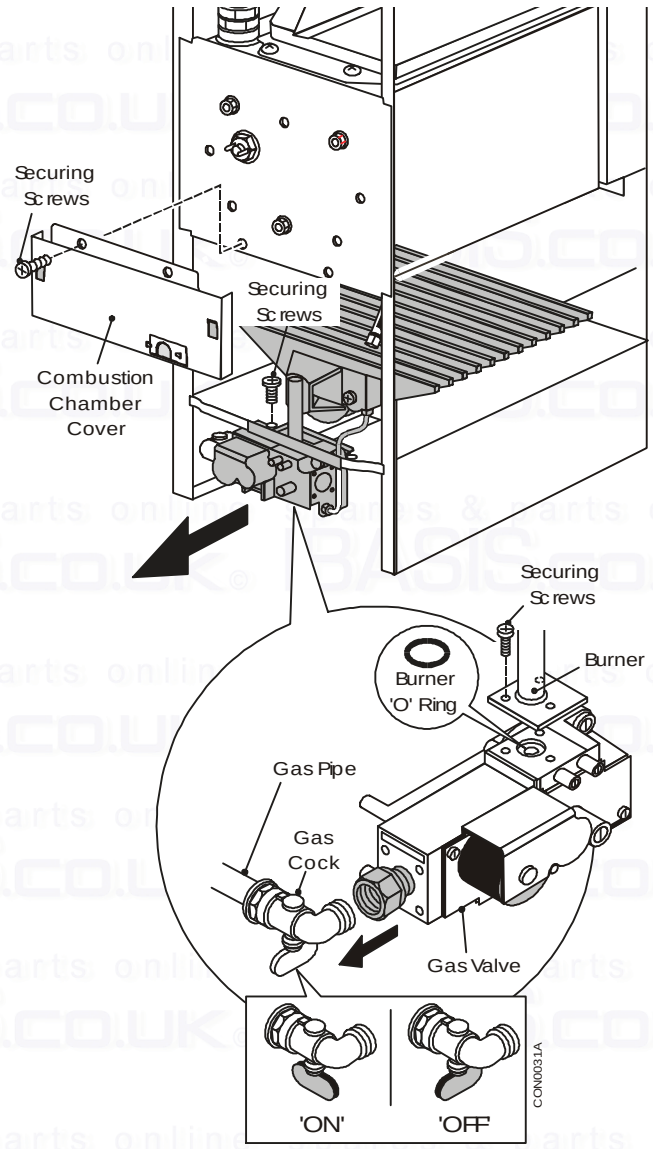

4.7 Combustion Chamber Insulation

- Gain General Access - See 4.1

1. Remove the burner/gas valve assembly - See 4.6.
2. Remove combustion chamber front cover - 2 screws
   Note: To avoid release of dust and fibrous material the insulation material should be dampend before removal.
3. Pull both sides of the combustion chamber inwards to unclip and pull forwards out from he boiler. Replace insulation pieces as required, replace any securing clip if damaged.
4. Re-assemble in reverse order.

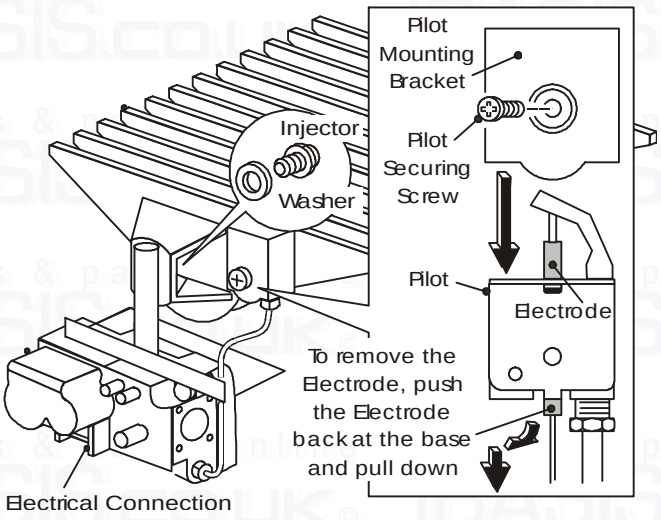

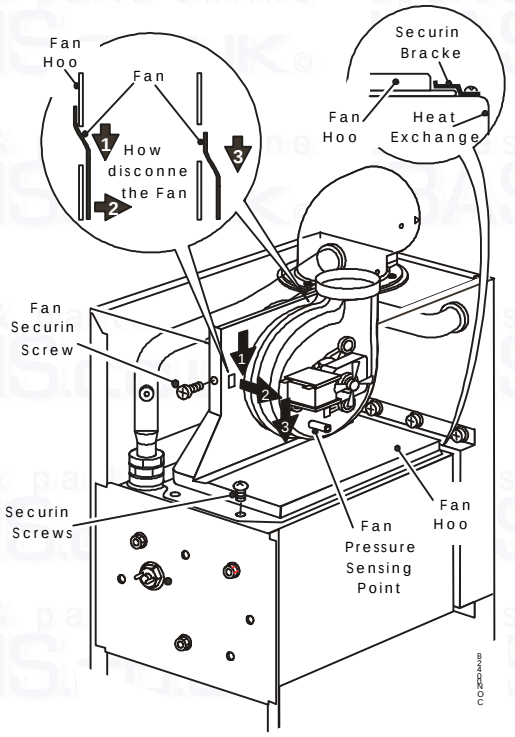

4.8 Fan & Fluehood

- Gain General Access - See 4.1

1. Disconnect the tube from the fan pressure sensing point on the front of the fan housing - note how it fits.
2. Disconnect the three wires from the fan motor.
3. Remove the securing screw and carefully pull the fan down and away from the boiler.
4. Remove the fluehood - 2 screws and withdraw it from the boiler.
5. *Fluehood:* On re-assembly check the seal on the fluehood and replace if damaged and ensure that the fluehood locates under the bracket at the rear of the chassis. .
6. *Fan:* On re-assembly ensure that the rubber seal around the fan opening is located correctly into the base of the flue elbow.
7. Re-assemble in reverse order.

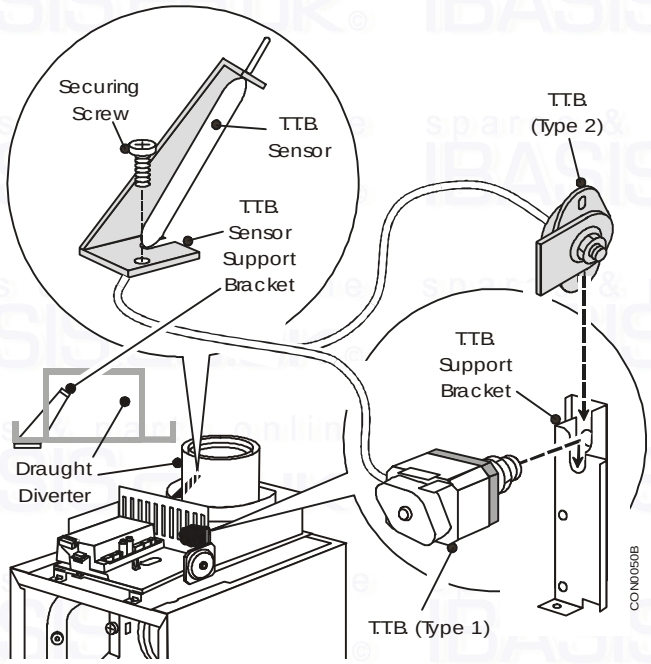

4.9 Products Discharge Safety Device - **TTB** (CF Models Only)

- Gain General Access - See 4.1

1. Note how it fits then remove the sensor. re-fit in reverse order.
2. If the device is disturbed during routine servicing an operational check should be carried out.
3. This component should only be replaced by the manufacturers original part.

spares & parts online IBASIS.CO.UK©

5. Wiring Diagrams - Page 30

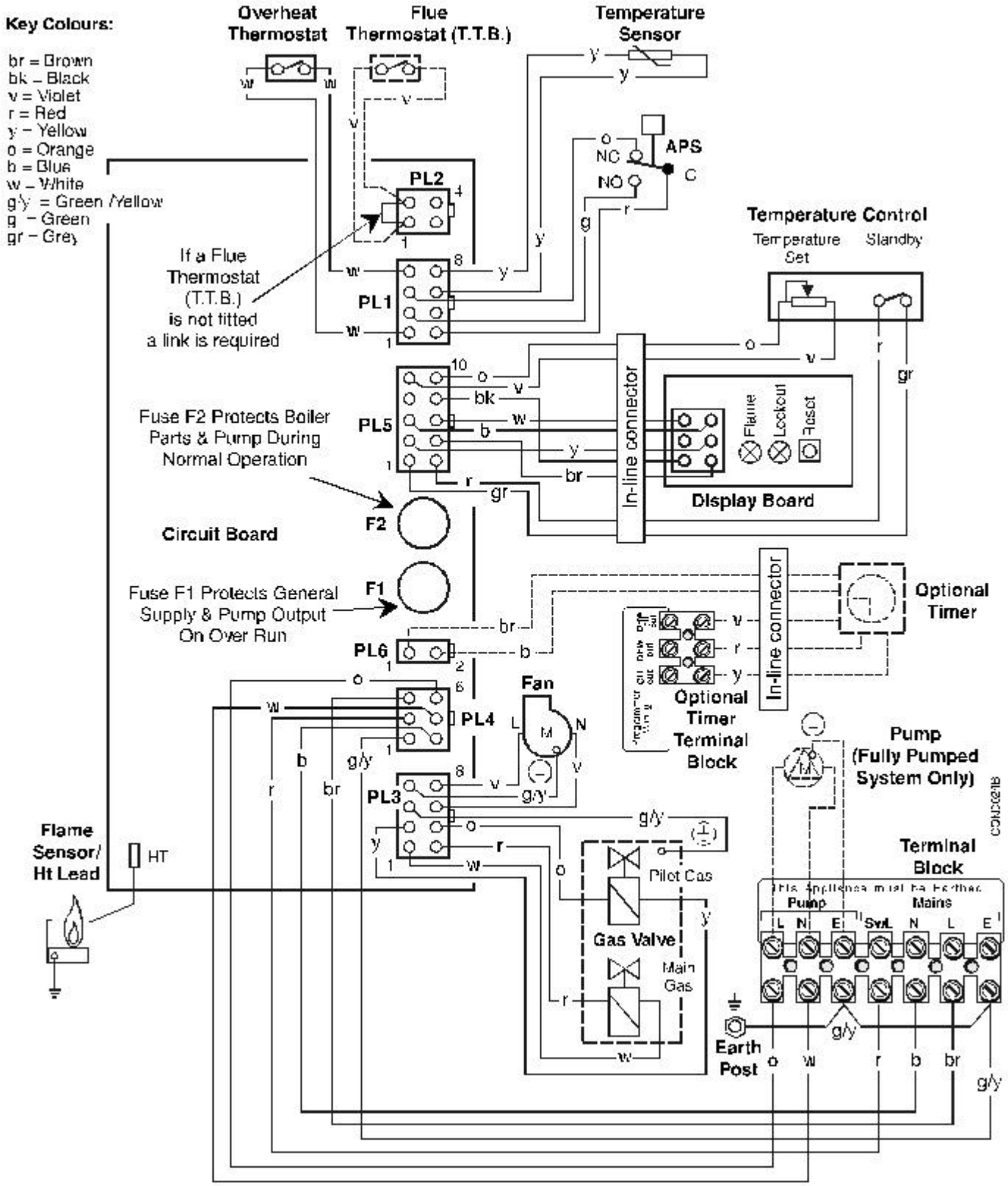

Pictorial Wiring Diagram - Page 31

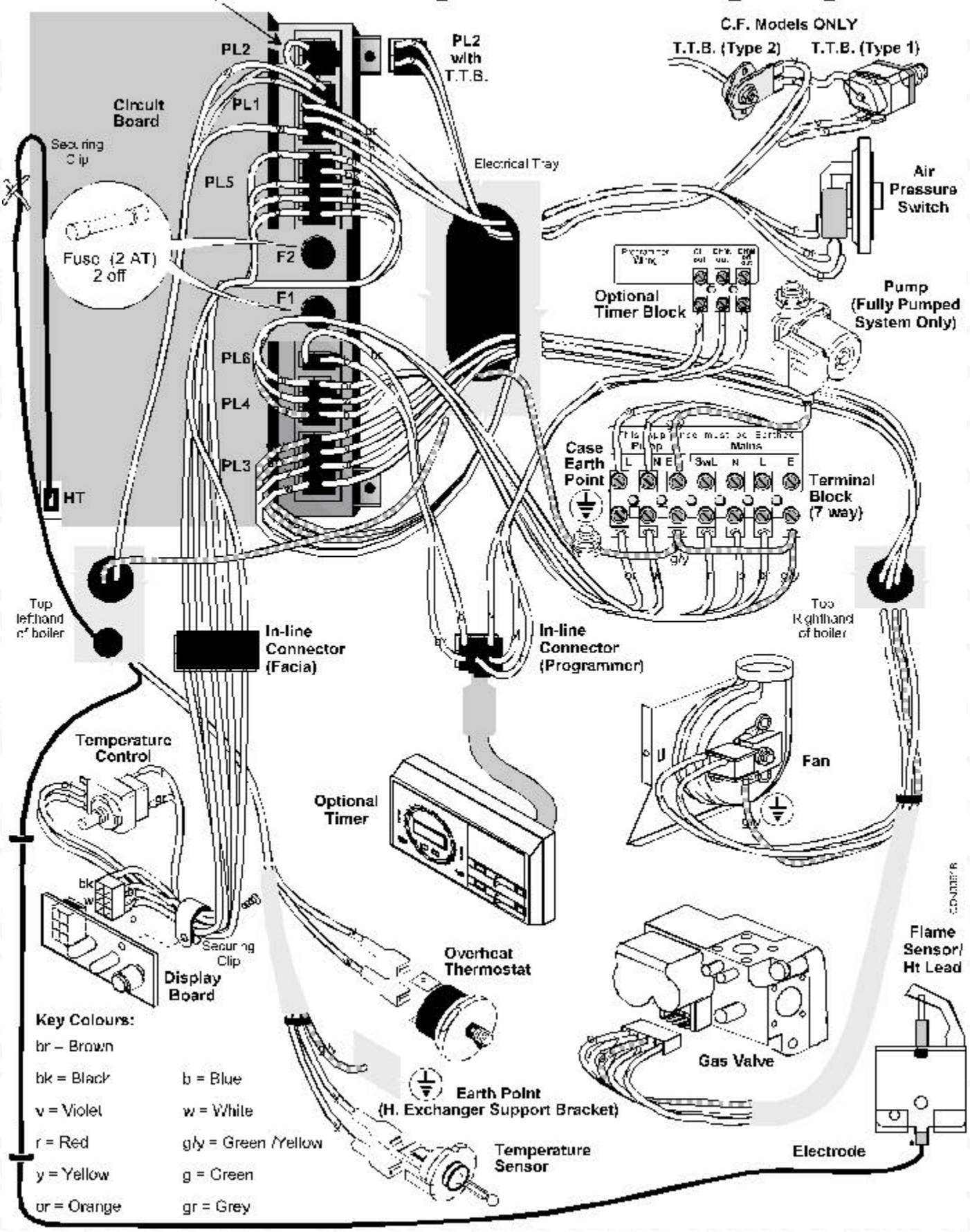

6. Fault Finding Guide - Page 32

If Red LED is 'ON' and the Boiler fails to work check the following:
Electrical Plugs (PL1 to PL6) are to remain connected to the Circuit Board for Fault Finding checks

Initial Conditions

ALL Electrical Power to the Heating System OFF - NO External Call for Heat (Thermostat & Programmer OFF)
Boiler Temperature Knob Set to 'i' (fully anti-clockwise 'click' OFF) - Gas & Water Connections Turned ON
Mains Supply Voltage is between 180Vac & 265Vac

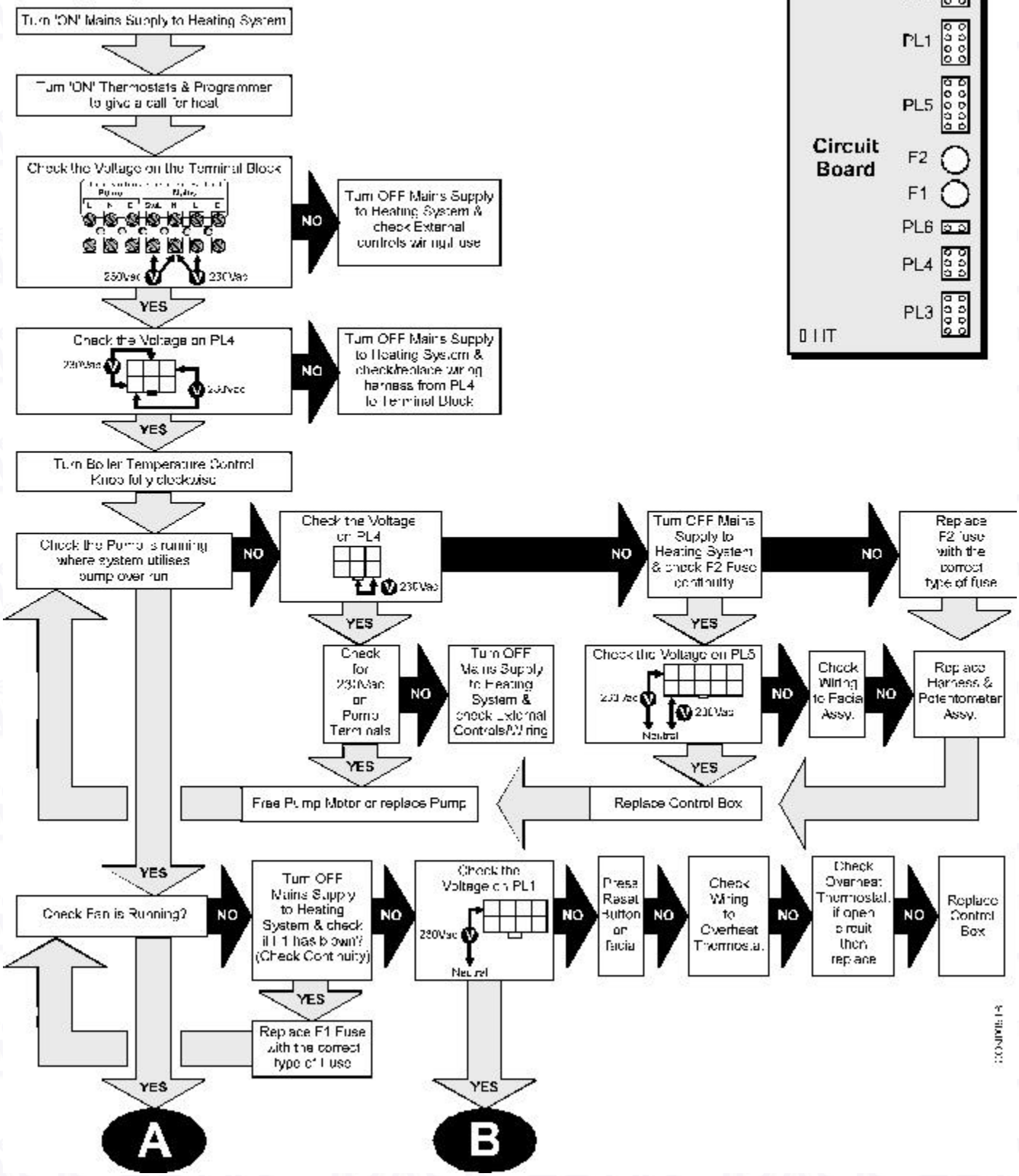

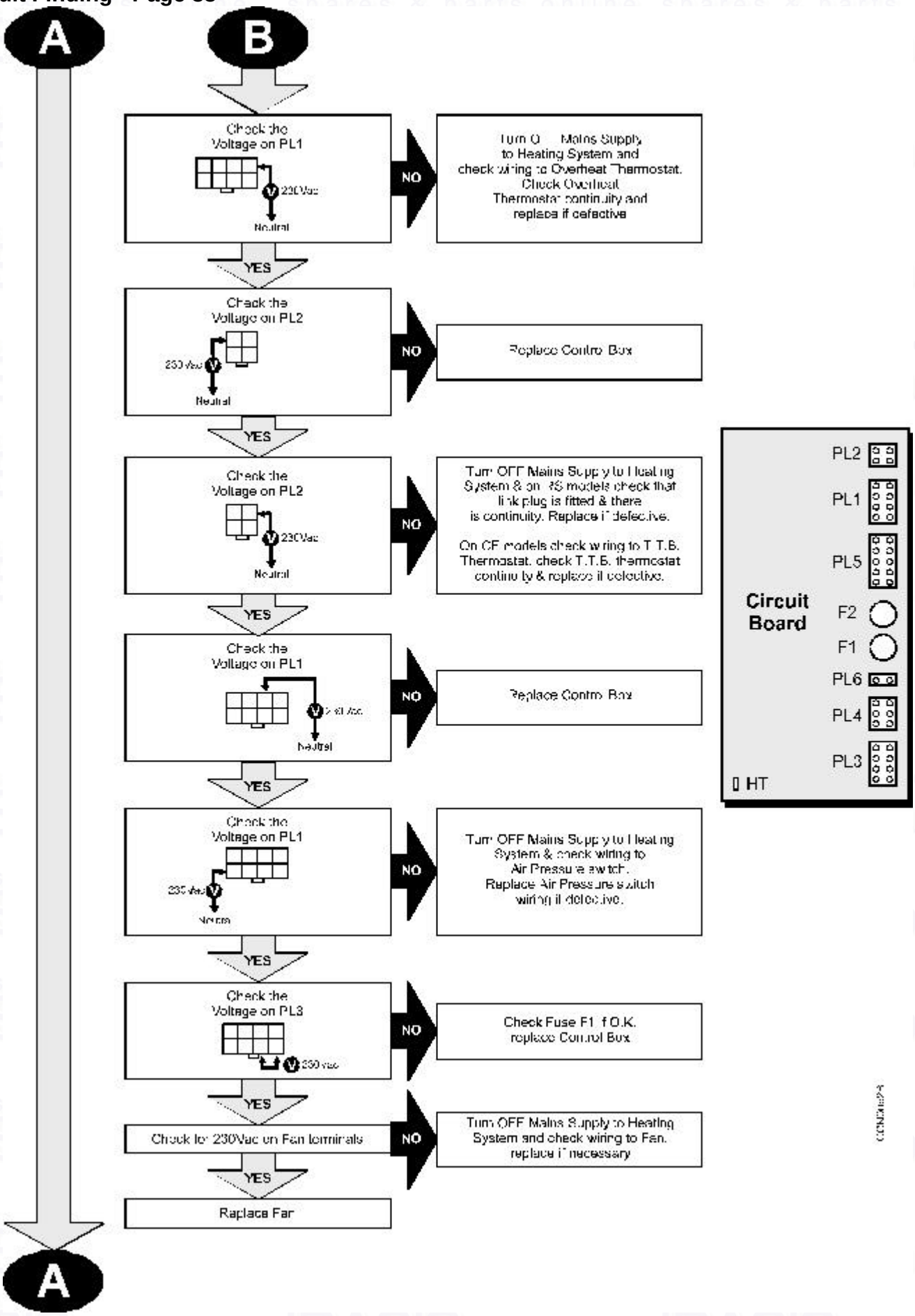
A
B
Check the Voltage on PL1
230Vac
Neutral
NO
Turn OFF Mains Supply to Heating System and check wiring to Overheat Thermostat. Check Overheat Thermostat continuity and replace if defective
YES
Check the Voltage on PL2
230Vac
Neutral
NO
Replace Control Box
YES
Check the Voltage on PL2
230Vac
Neutral
NO
Turn OFF Mains Supply to Heating System & on RS models check that link plug is fitted & there is continuity. Replace if defective.
On CF models check wiring to T.T.B. Thermostat. check T.T.B. thermostat continuity & replace if defective.
YES
Check the Voltage on PL1
Neutral
NO
Replace Control Box
YES
Check the Voltage on PL1
230Vac
NO
Turn OFF Mains Supply to Heating System & check wiring to Air Pressure switch. Replace Air Pressure switch wiring if defective.
YES
Check the Voltage on PL3
230Vac
NO
Check Fuse F1 if O.K. replace Control Box
YES
Check for 230Vac on Fan terminals
NO
Turn OFF Mains Supply to Heating System and check wiring to Fan. replace if necessary
YES
Replace Fan
A
Circuit Board
PL2
PL1
PL5
F2
F1
PL6
PL4
PL3
HT

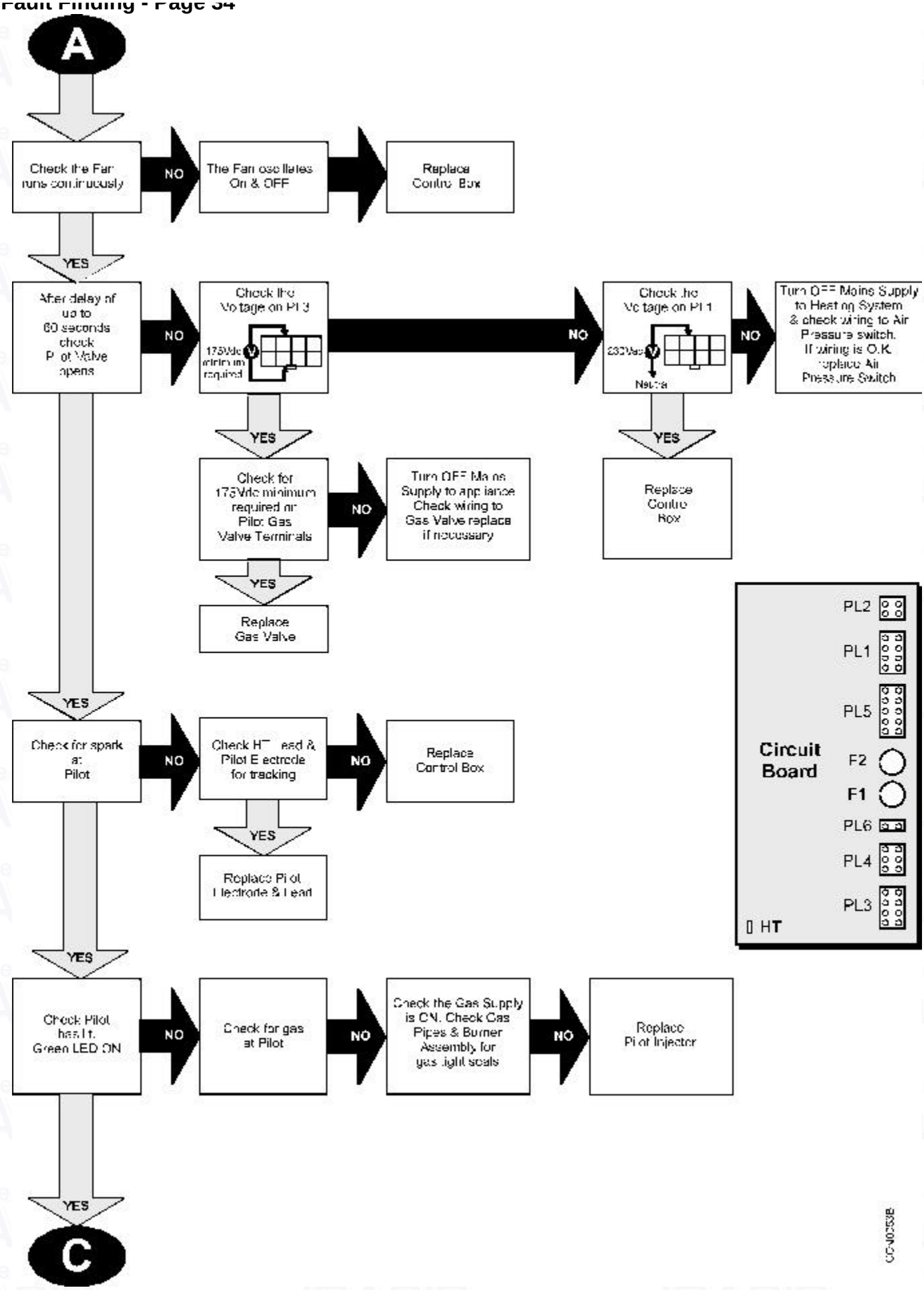
A
Check the Fan runs continuously
NO
The Fan oscillates On & OFF
Replace Control Box
YES
After delay of up to 60 seconds check Pilot Valve opens
NO
Check the Voltage on PL3
175Vdc minimum required
NO
Check the Voltage on PL1
230Vac
Neutral
NO
Turn OFF Mains Supply to Heating System & check wiring to Air Pressure switch. If wiring is O.K. replace Air Pressure Switch
YES
Check for 175Vdc minimum required on Pilot Gas Valve Terminals
NO
Turn OFF Mains Supply to appliance Check wiring to Gas Valve replace if necessary
YES
Replace Gas Valve
YES
Replace Control Box
YES
Check for spark at Pilot
NO
Check HT Lead & Pilot Electrode for tracking
NO
Replace Control Box
YES
Replace Pilot Electrode & Lead
YES
Check Pilot has lit. Green LED ON
NO
Check for gas at Pilot
NO
Check the Gas Supply is ON. Check Gas Pipes & Burner Assembly for gas tight seals
NO
Replace Pilot Injector
YES
C
Circuit Board
PL2
PL1
PL5
F2
F1
PL6
PL4
PL3
HT

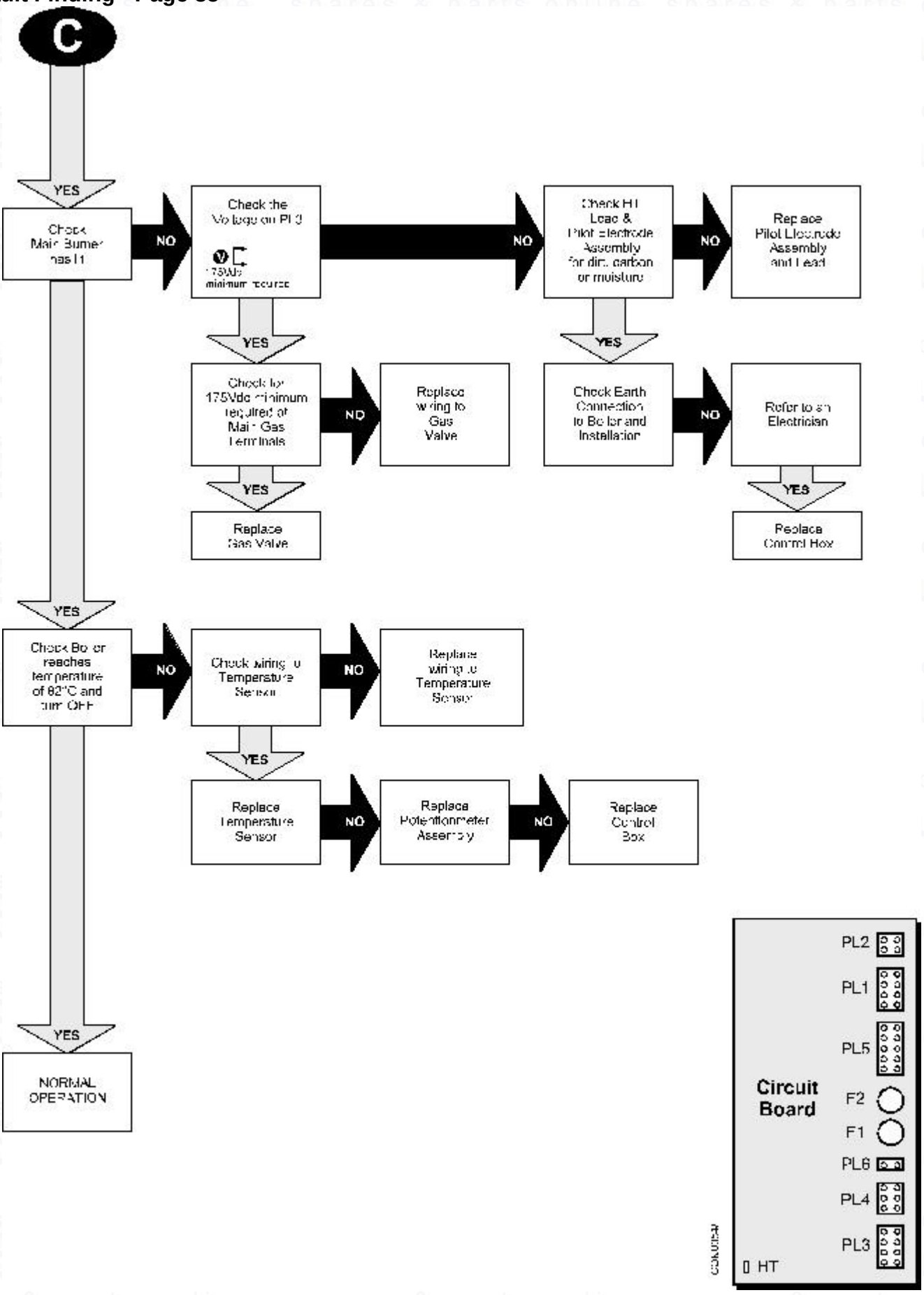
C
YES
Check Main Burner has H
NO
Check the Voltage on PL3
175Vdc minimum required
NO
Check HT Lead & Pilot Electrode Assembly for dirt, carbon or moisture
NO
Replace Pilot Electrode Assembly and Lead
YES
Check for 175Vdc minimum required at Main Gas Terminals
NO
Replace wiring to Gas Valve
YES
Replace Gas Valve
YES
Check Earth Connection to Boiler and Installation
NO
Refer to an Electrician
YES
Replace Control Box
YES
Check Boiler reaches temperature of 82°C and turn OFF
NO
Check wiring to Temperature Sensor
NO
Replace wiring to Temperature Sensor
YES
Replace Temperature Sensor
NO
Replace Potentiometer Assembly
NO
Replace Control Box
YES
NORMAL OPERATION
Circuit Board
PL2
PL1
PL5
F2
F1
PL6
PL4
PL3
HT

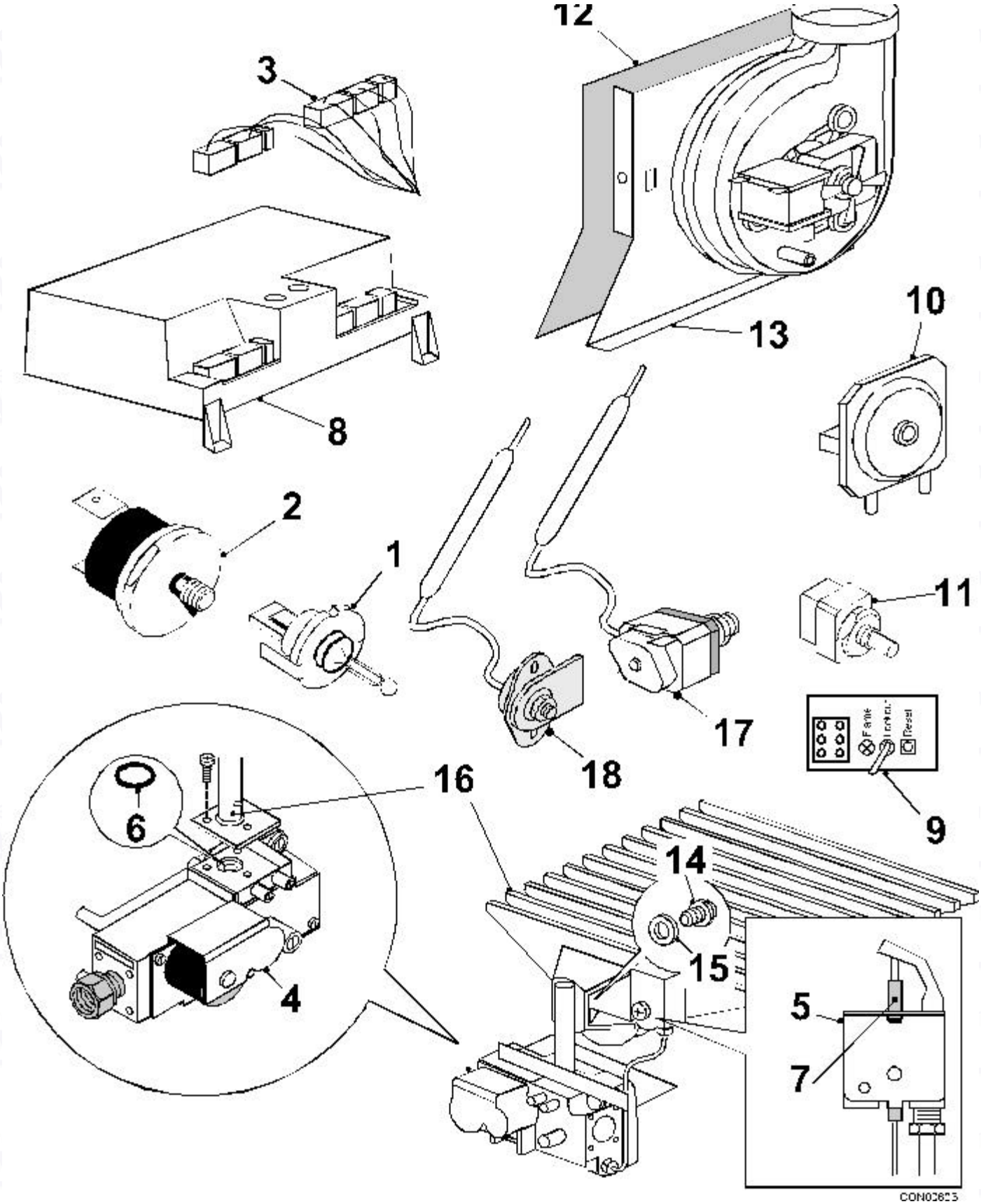

7. Short List Of Spare Parts - Page 36

Short List Spare Parts - Page 37

Item No.	Catalogue No.	Description	Qty.	G.C. No.
1	8404524	Thermistor	1	E02-325
2	8404517	Overheat Thermostat	1	173-130
3	8242110	Main Wiring Harness	1	E02-367
4	8402556	Gas Valve - Honeywell CF/RS 40 - 100	1	E02-352
5	8402559	Pilot Burner - Honeywell	1	379-672
6	8401656	'O' Ring	1	114-963
7	8402561	Electrode - Honeywell	1	E02-372
8	8840073	Main PCB	1	E02-365
9	8650451	User Control Board	1	E02-379
10	8642481	Pressure Switch Assembly - RS 50/60/70/80. CF 50/70/90	1	E02-374
	8642482	Pressure Switch Assembly - RS 40. CF 40/60	1	E02-376
	8642483	Pressure Switch Assembly - RS 90/100. CF90/100	1	E02-448
11	8840072	Potentiometer/Wiring Harness Assy	1	E02-380
12	8242045	Fan Gasket	1	E02-313
13	8242083	Fan Assy c/w Gasket - CF/RS 40 - 80	1	E03-826
	8242084	Fan Assy c/w Gasket - CF/RS 90 - 100	1	E03-827
14	8411041	Injector 2.9 - CF/RS 40	1	E02-348
	8411028	Injector 3.2 - CF/RS 50	1	173-139
	8411024	Injector 3.7 - CF/RS 60	1	173-136
	8411025	Injector 3.9 - CF/RS 70	1	173-137
	8411026	Injector 4.1 - CF/RS 80	1	173-138
	8411039	Injector 4.4 - CF/RS 90	1	E02-349
	8411040	Injector 4.7 - CF/RS 100	1	E02-350
15	8400984	Injector Washer	1	405-562
16	8414822	Burner - Aeromatic - CF/RS 40	1	E02-344
	8414823	Burner - Aeromatic - CF/RS 50	1	E02-345
	8414820	Burner - Aeromatic - CF/RS 60 - 80	1	E02-346
	8414821	Burner - Aeromatic - CF/RS 90 - 100	1	E02-347
17	8404525	Products Discharge Safety Device - TTB - CF 40 & 70 Only	1	E02-407
18	8404528	Products Discharge Safety Device - TTB - CF 50, 60, 80, 90, 100 Only	1	E02-408

spares & parts online IBASIS.CO.UK

Internal Fitment Kit
Sales Code:
SUPKITA

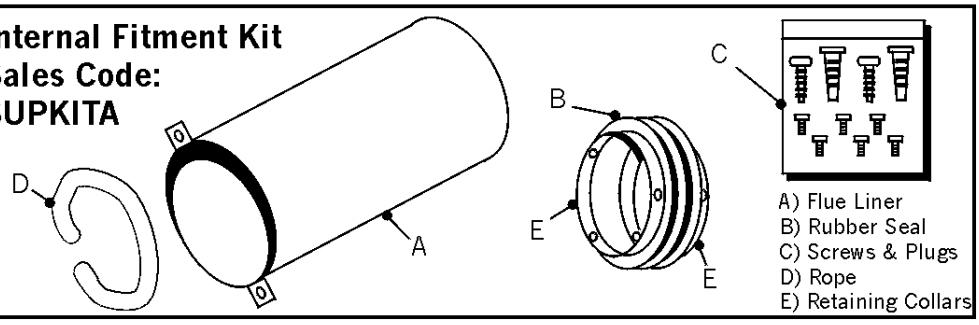

Side Cover Kit
Sales Code:
KMFKITE

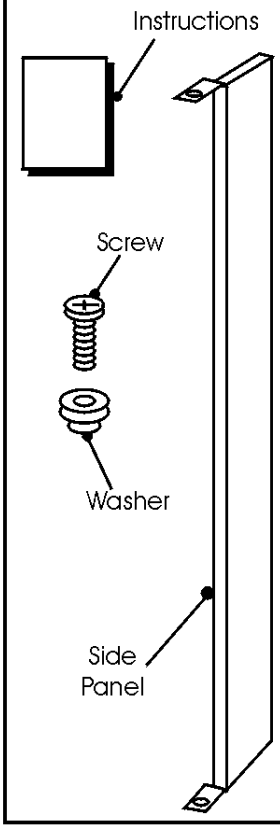

Programmer Kit
Sales Code:KMFKITA

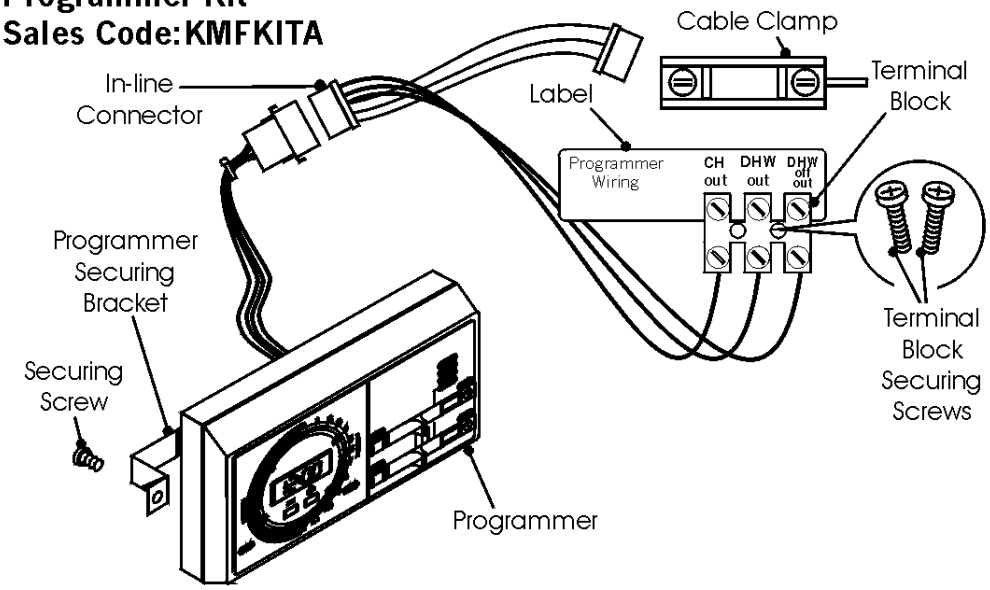

Terminal Wall Plate Kit
Sales Code:KMFKITC

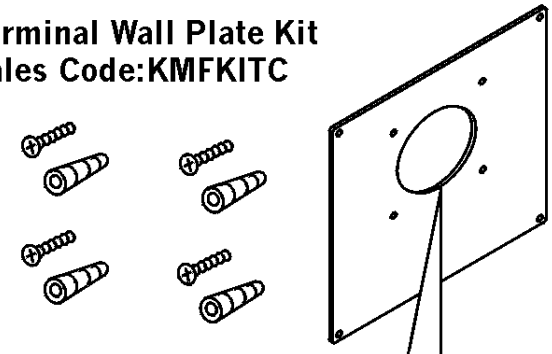

Telescopic In-Line Bend Adaptor
Sales Code:
SUPKITR

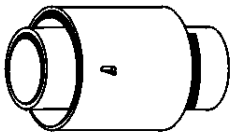

Wall Plate Pack
Sales Code:SUPKITB

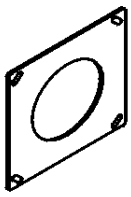

Terminal Guard
Sales Code:
PTERMGUARDEF

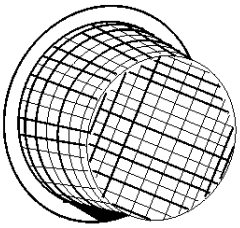

CON0017B

spares & parts online IBASIS.CO.UK

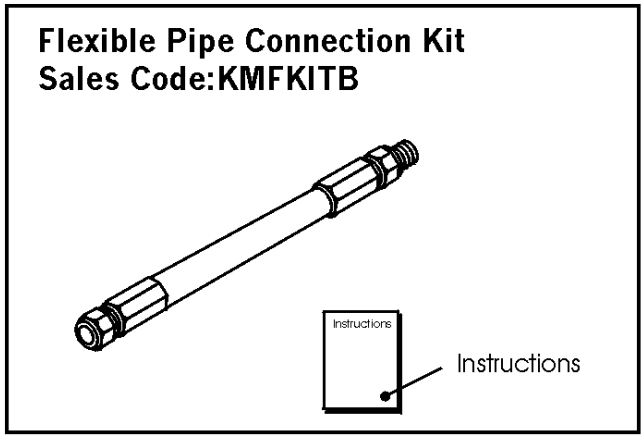

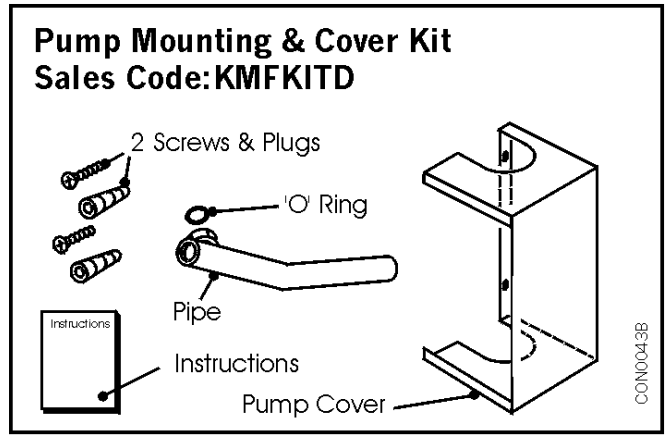

Installation instructions included as necessary with each kit.

Back Page

spares & parts online IBASIS.co.uk