Part No. 27/13310 - 03
Puma 80 - G.C. No. 47 590 10
Puma 80e - G.C. No. 47 590 11
Puma Saver - G.C. No. 47 393 01

Installation & Service Instructions

Puma 80, 80e & Saver

Wall Mounted, Fanned, Room Sealed Combination Boiler

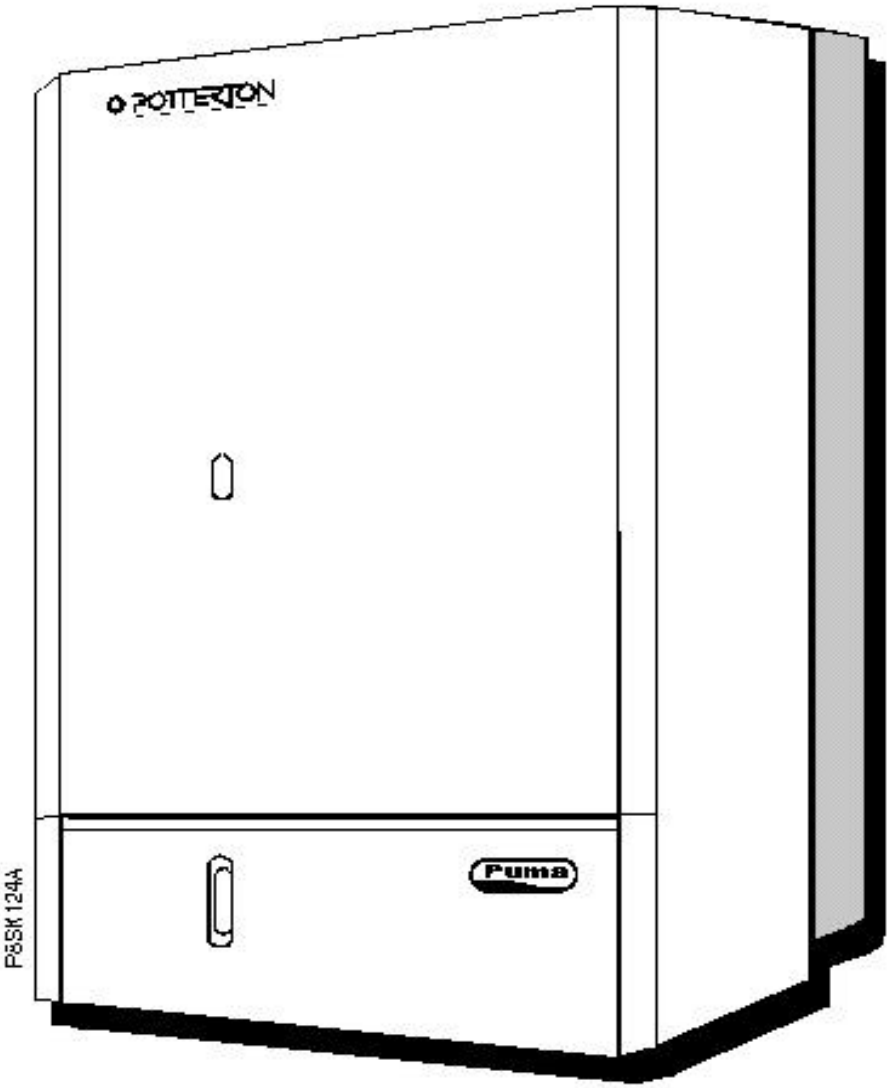

THE GAS SAFETY (INSTALLATION AND USE) REGULATIONS 1994 (as amended).

‘‘ In your own interest, and that of safety, it is law that all gas appliances are installed by competent persons, in accordance with the above regulations. Failure to install appliances correctly could lead to prosecution.’’

The polythene bags used for packaging are a potential hazard to babies and young children and MUST BE DISPOSED OF IMMEDIATELY.

LEAVE THESE INSTRUCTIONS WITH THE USER FOR USE ON FUTURE CALLS

For Use With Natural Gas (G20) Only At 20mbar
For Use in GB & IE

IMPORTANT
PLEASE READ THIS BOOK BEFORE INSTALLING, OPERATING OR SERVICING THIS APPLIANCE

Contents - Page 2

Technical Data 3
Introduction 4
Optional Extras 5

1. Installation Requirements 8
1.1 General Information 8
1.2 Location of Boiler 7
1.3 Flue Terminal and Ducting 10
1.4 Air Supply 10
1.5 Guide to System Requirements 11
1.6 Mains Water Feed C.H. 12
1.7 Installation to an Existing System 12
1.8 Hard Water Areas 12
1.9 Pump Performance Curve 13
1.10 Electrical Supply 14
1.11 Clearance Around the Appliance 15

2. Boiler Installation 16
2.1 Unpacking 16
2.2 Gas Connection 17
2.3 D.H.W Supply 17
2.4 C.H. Supply 17
2.5 Pressure Relief Valve 18
2.6 Wiring the Appliance 18

3. Commissioning 19
3.1 Electrical Installation 19
3.2 Gas Installation 19
3.3 Initial Lighting 20
3.4 Gas Pressure Adjustment 21
3.5 Products of Combustion Measurement 22
3.6 D.H.W Flow Rate 23
3.7 Central Heating 23
3.8 Temperature Controls 23
3.9 Appliance Protection Devices 23
3.10 Re-fit Outer Case 24
3.11 Handing Over to the User 24

4. Servicing 25

5. Routine Maintenance 26
5.1 Remove the White Front Case 26
5.2 Remove Base Panel 26
5.3 Remove the Air Box Covers 26
5.4 Remove the Fan Assembly 26
5.5 Remove the Flue Hood 26
5.6 Remove the Combust. Cham. Front Panel 26
5.7 To Inspect and Clean the Boiler 26
5.8 To Remove the Burner 28
5.9 Gas Pressure Adjustment 28
5.10 The Central Heating Sealed System 28
5.11 Other Components 28

6. Component Replacement 30
6.1 Central Heating Overheat Thermostat 31
6.2 Dom. H/Water Limit & Frost Thermostat 31
6.3 Sensor and Ignition Electrode 31
6.4 Sensor and Ignition Leads 31
6.5 Spark Ignition Lead 31
6.6 Thermocouple 31
6.7 Burner 32
6.8 Injectors 32
6.9 Gas Valve 32
6.10 Modulating Valve 32
6.11 First Solenoid Valve 32
6.12 Second Solenoid Valve 32
6.13 Case Seal 32
6.14 Central Heating and Boiler Switch 35
6.15 Electronic Control Boards 35
6.16 Air Pressure Switch 36
6.17 Fan 36
6.18 Fan Seals 36
6.19 Temperature Sensor D.H.W and C.H 36
6.20 Pressure Gauge 36
6.21 Water Flow Switch D.H.W 37
6.22 Microswitch (D.H.W Flow Switch) 37
6.23 Pump 37
6.24 Diverter Valve 38
6.25 Expansion Vessel D.H.W 39
6.26 Expansion Vessel C.H 39
6.27 Heat Exchanger 40
6.28 Automatic Air Vent 40
6.29 Pressure Relief Valve 40
6.30 Water Pressure Switch 41
6.31 Transformer Assembly 41
6.32 Sight Glass with Securing Frame 41

7. Schematic Diagrams - Permanent Pilot 42/45
8. Schematic Diagrams - Electronic 46/49
9. Short List of Spares 50/51

GAS SAFETY (INSTALLATION AND USE) REGULATIONS 1994. (As Amended)

The appliance must be installed and serviced by a competent person, in accordance with the above Regulations.

In the UK 'Corgi' Registered Installers (including the Regions of British Gas) undertake the work to a safe and satisfactory standard.

Failure to install appliances correctly could lead to prosecution.

It is in your own interest, and that of safety, to ensure that the Regulations are complied with.

Technical Data - Page 3

Heat Input:	Max.	30.0kW	(102,350Btu/h)
	Range Rate (C.H. Only)	22.5kW	(76,760Btu/h)
	Min.	14.4kW	(49,130Btu/h)
Heat Output:	Max	24.0kW	(81,880Btu/h)
	Range Rate (C.H. Only)	17.2kW	(58,680Btu/h)
	Min.	10.4kW	(35,480Btu/h)
Gas Rate	Full	2.86m³/hr	101ft³/hr
Inlet Pressure		20mbar	(18 - 25mbar)
Burner Pressure			
Max. (Max. Setting on Gas Valve)		15.0mbar	(6.0" w.g.)
Range Rate (C.H. Only)		8.3mbar	(3.3" w.g.)
Minimum (Electronically Set)		3.5mbar	(1.4" w.g.)
Classifications		I_2H, C12 & C32, IP20	
Pilot Burner		Bray AB 1920	
Main Burner		Bray AB 24081M	
Gas Control Valve:	SIT Controls (80)	Nova 825 (0.825.013) Inc. 2nd Solenoid Valve (0.007.406) Inc. Modulator - 28V. DC. (0.007.413)	
	SIT Controls (80e/Saver)	Nova 827 (0.827.127) Inc. 1st Solenoid Valve (0.007.424) Inc. 2nd Solenoid Valve (0.007.406) Inc. Modulator - 28V. DC. (0.007.413)	
Burner Injector		3 off	
Electrical Supply		230V ~ 50Hz	
Fuse Rating - External		3A	
Packed Weight		58.5kg (129lbs)	
Water Content C.H.		1.85 litres	
Gas Supply Connection		1/2" B.S.P.F. Gas Cock	
Inlet Connection D.H.W		15mm Compression Isolating Valve	
Outlet Connection D.H.W		15mm Copper Pipe	
Flow Connection C.H.		22mm Compression Isolating Valve	
Return Connection C.H.		22mm Compression Isolating Valve	
Safety Discharge Pipe		15mm Copper Pipe	
C.H. Sealed System			
Maximum Operating Pressure		2.5bar	36.3lb/in²
Minimum Operating Pressure		0.5bar	7.25lb/in²
10 Litre Expansion Vessel. Pre-charge Pressure		1.0bar	14.5lb/in²
Maximum Temperature Rise across the Boiler		30°C	
Central Heating Flow Temperature		Max. Load 79°C Min. Load 85°C	
Central Heating Return Temperature		68°C (Nominal)	
D.H.W Flow Rate 35°C Rise		9.8litres/minute	2.16gals/min
D.H.W Flow Rate 45°C Rise		7.6litres/minute	1.67gals/min
D.H.W Temperature:	Max	65°C	
	Min	45°C	
D.H.W Max. Pressure		10.0bar	145.0lb/in²
D.H.W Min. Operating Pressure (Dynamic)		1.0bar	14.5lb/in²
D.H.W Expansion Vessel. Pre-charge Pressure		3.5bar	50.8lb/in²

Samples of the Puma combination boiler have been examined by Gastec, a Netherlands Notified Body. The range is certified to comply with the essential requirements of the Gas Appliance Directive 90/396/EEC, the Low Voltage Directive 72/23/EEC and shows compliance with the Electro Magnetic Compatibility Directive 89/336/EEC and are therefore permitted to carry the CE Mark.

The appliance has been tested and approved by the WRc as meeting the requirements of G3 and L of the Building regulations and water Bylaws Scheme - Approved Products.

The Potterton Puma range of boilers are fully automatic, wall mounted, fan assisted, room sealed combination boilers, designed to operate on Natural Gas only. The range of consists of permanent pilot and electronic versions in both 24 kW and 29 kW (100,000Btu/h) outputs.

The 80, 80e and Saver models adjust automatically to provide central heating outputs between 24 kW (81,880 Btu/h) and 10.4 kW (35,480 Btu/h) to suit the system requirements.

Domestic hot water has priority over the central heating system and is generated instantaneously within the appliance.

The combination boilers are designed for use with fully pumped sealed system only. This has the advantage that header tanks and hot water storage cylinders are not required.

The range of horizontal and vertical flue systems with small terminals simplify siting and installation.

They are supplied fully tested and assembled with a circulating pump, diverter valve, pressure gauge, pressure relief valve, and expansion vessels.

The appliances have two completely separate heating systems embedded into a copper heat exchanger. Both systems are completely independent.

A central heating switch controls the choice of service between central heating and hot water only. The boiler water flow system is shown in Fig. 5.

With the central heating switch set to 'Off' and the boiler switch set to 'On', the combination boiler fires only when hot water is drawn off.

With the central heating switch set to 'Timed' the boiler will operate the central heating for the time periods set on the optional internal or externally mounted timeclocks. If 'Constant' is selected the boiler will operate continuously.

The central heating is supplied at a pre-set temperature determined by the central heating thermostat setting.

If domestic hot water is drawn off while the central heating is running the combination boiler will automatically transfer the boiler heat output to the domestic hot water supply.

At the minimum hot water draw-off rate the maximum temperature is limited to 65°C by the modulating gas control.

The combination boiler has a white front case which can be removed for servicing.

Data plates are positioned on the front of the air box door and a boiler serial badge is on the underside of the air box. A duplicate serial badge is positioned on the underside of the case base for customer reference.

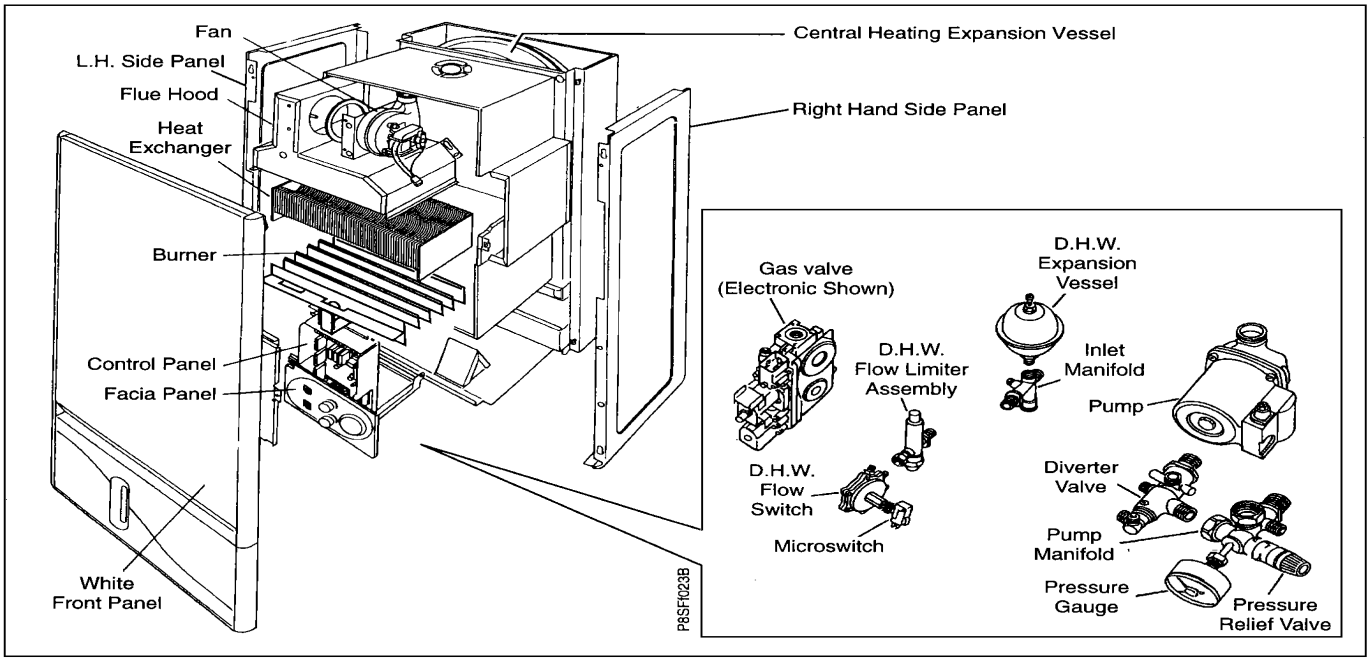

Fig 1

Optional Extras - Page 5

Installation instructions included as necessary with each kit.

Electro-mechanical Timer Pack
Sales Code: PUMAPROGM

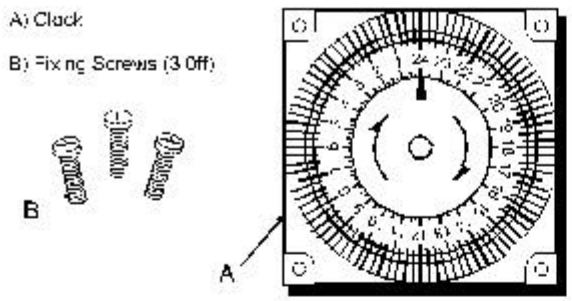

Electronic Timer Pack
Sales Code: PUMAPROGE

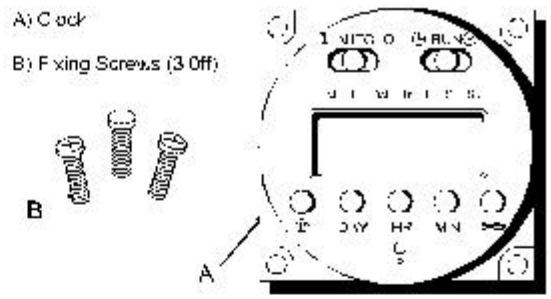

Case Extension Kit
Sales Codes:
PUMACASE80

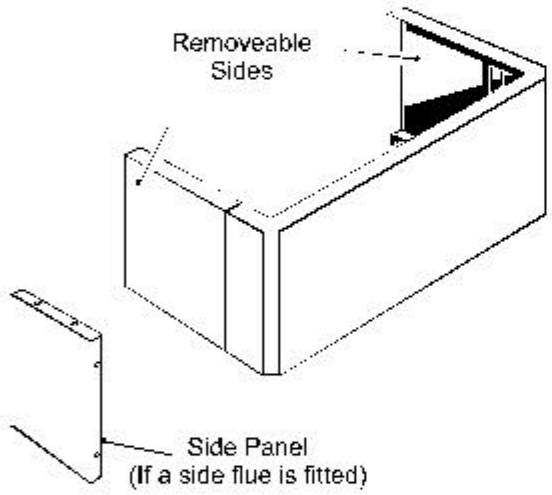

Feed Pipe Cover Kit
Sales Codes: PUMAKITM

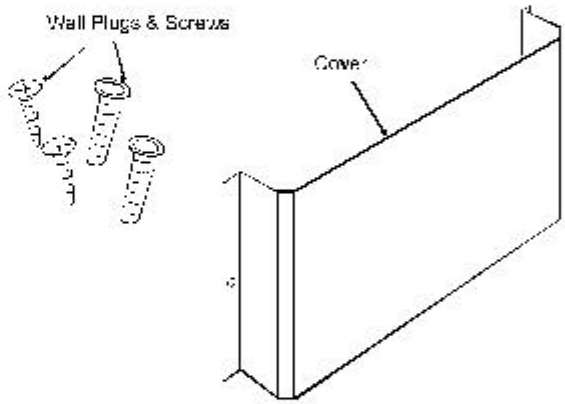

Pipework Positioning Jig
Sales Code: PUMAKITN

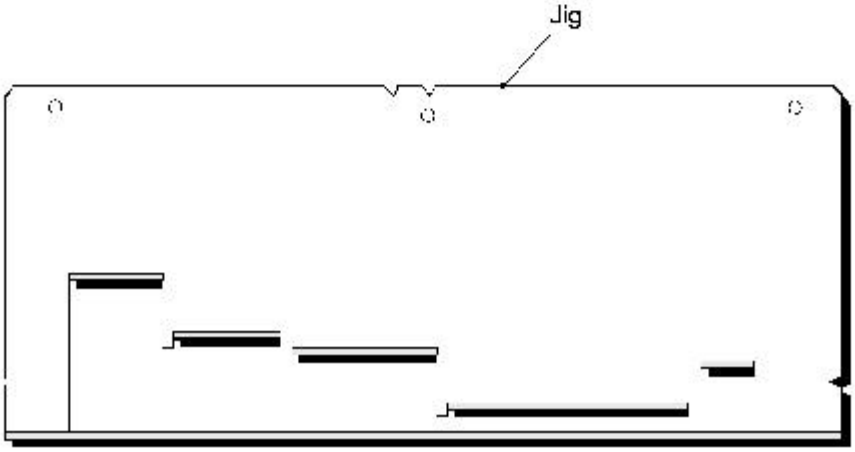

spares & parts online IBASIS.CO.UK

Installation instructions included as necessary with each kit.

Standard Horizontal Flue Kit Sales Code: 1PUMAFLUE (approx. 1m)

A) Flue Elbow

B) Air Seal Clamp (Including screws & captive nuts)

C) Air Tube Seal

D) Flue Terminal/Seal Assembly

E) Inner Wall Seal

F) Wall Liner

G) Centralizing Spring

Polybag Pack consisting of:

H) Elbow Gasket

J) Product Tube 'O' Ring (one spare)

K) 2 off 38mm Woodscrews & Wall Plugs

L) 4 off 10mm long M5 Screws

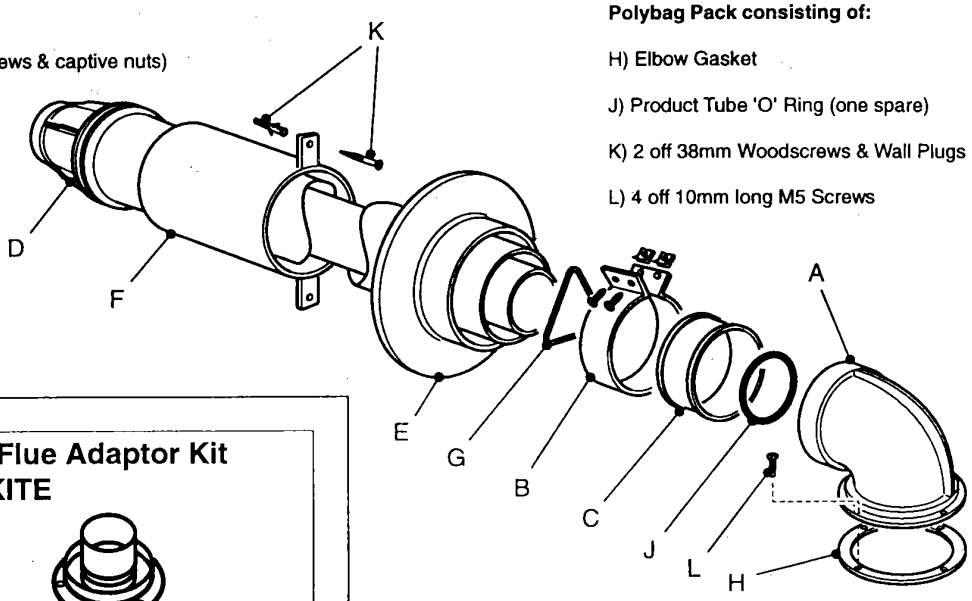

Concentric Vertical Flue Adaptor Kit Sales Code: PUMAKITE

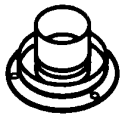

Concentric Vertical Flue Kit Sales Code: PUMAKITD

A) Terminal Assy.

B) Terminal Clamp Bracket

C) Air Tube Adaptor

D) Product Tube Adaptor

E) Boiler Adaptor

F) Air Tube Seal

G) Air Tube Clamp (Including Screws Nuts)

H) Ceiling Seal

J) Flange Assy. Gasket

K) Poly Bag Assey.: 4off 10mm long M5 Screws

L) Ceiling Template

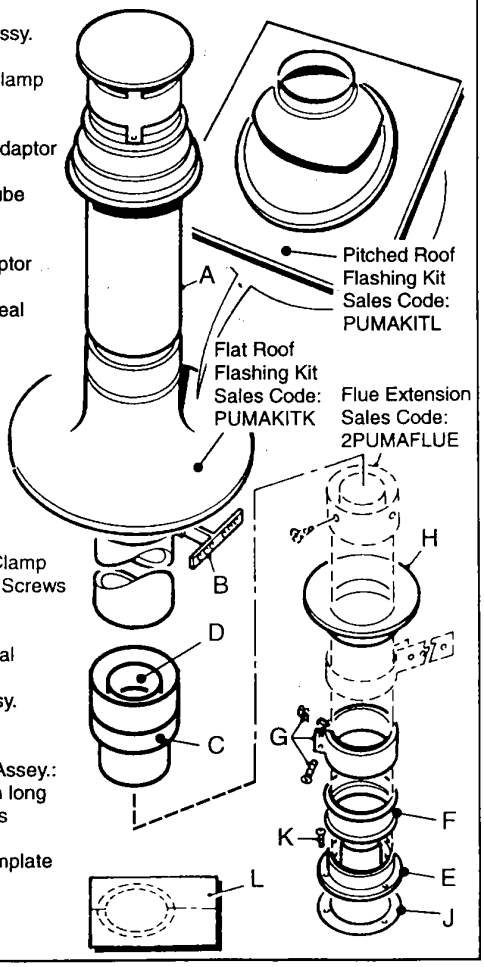

Fig. 3

Twin Tube Vertical Flue Kit Sales Code: PUMAKITF

A) Terminal Assy.

B) Terminal Clamp

C) Branch Piece

D) Adaptor Assy. Gasket

E) Boiler Adaptor

F) 80mm Dia. Female/Female Connector

G) Poly Bag Assy. 4 off 40mm long M5 Screws

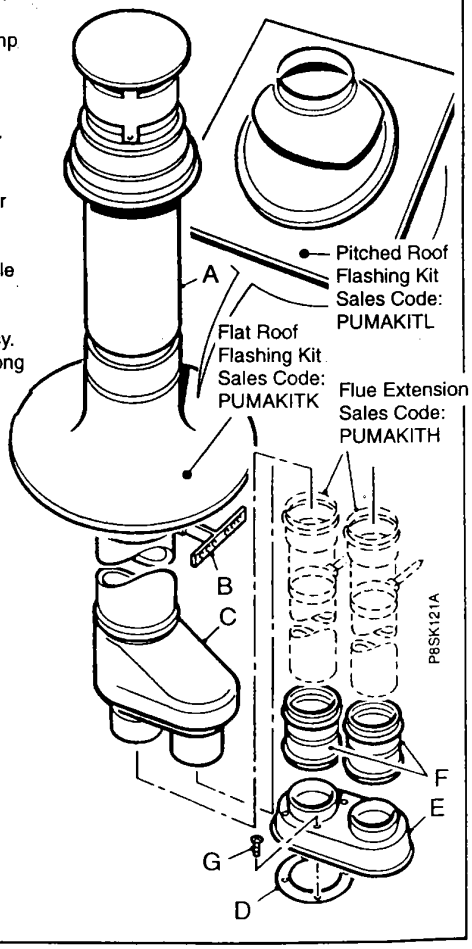

1m Flue Extension Kit
Sales Code: 2PUMAFLUE

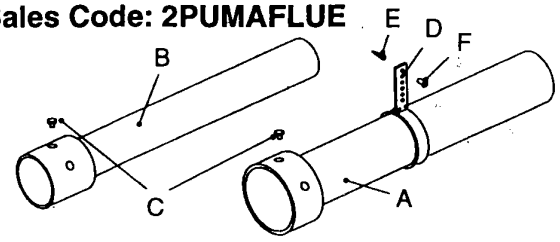

A) Extension Air Tube (Outer)
B) Extension Flue Tube (Inner)
C) S/T Screws (6 off)
D) Fixing Bracket
E) Woodscrews (2off)
F) Wall Plugs (2 off)

Flat Roof Flashing Sales Code: PUMAKITK

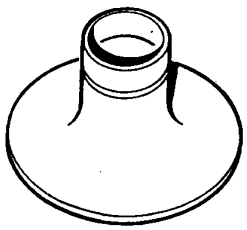

Pitched Roof Flashing Sales Code: PUMAKITL

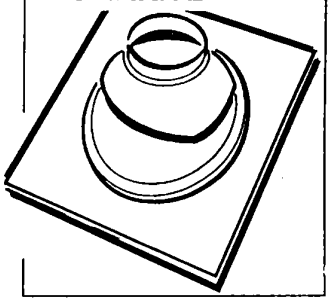

90° In-Line Bend Kit
Sales Code: PUMAKITB

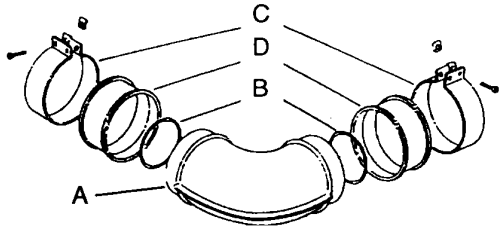

A) 90° In-Line Elbow
B) Product Tube 'O' Ring (2 off)
C) Air Tube Clamp (Including Nuts/Screws)
D) Air Tube Seal (2 off)

135° In-Line Elbow Kit
Sales code: PUMAKITC

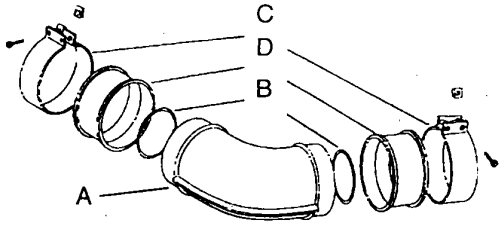

A) 135° In-Line Elbow
B) Product Tube 'O' Ring (2 off)
C) Air Tube Clamp (Including Nuts/Screws)
D) Air Tube Seal (2 off)

1m Twin Tube Flue Extension Kit
Sales Code: PUMAKITH

A) Extension Tubes (2 off)

B) Fixing Brackets (Incl. Screws & Clips)

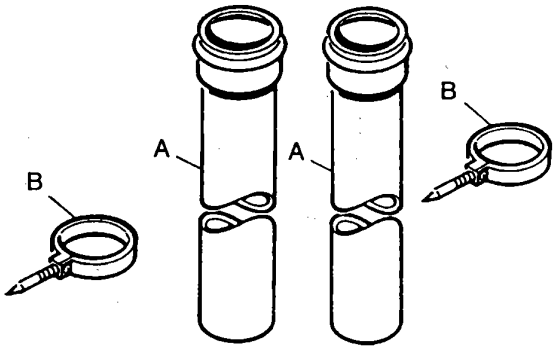

Twin Tube 90° In-Line Bend Kit
Sales code: PUMAKITI

A) 2 off - 90° In-Line Elbow

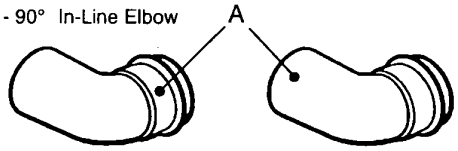

Twin Tube 135° In-Line Bend Kit
Sales Code: PUMAKITJ

A) 4 off - 135° In-Line Bend

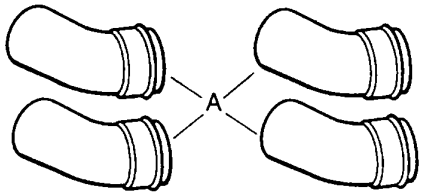

Terminal Guard Sales Code: PTERMGUARDEF

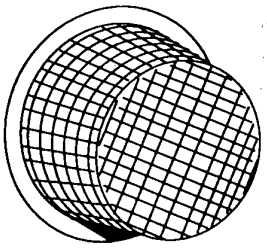

Flue Elbow Kit Sales Code: PUMAKITA

A) Flue Elbow
B) 'O' Ring
C) Air Tube Clamp Assy.
D) Clamp Seal
E) Elbow Gasket
F) Screws M5 x 10mm (4 off)

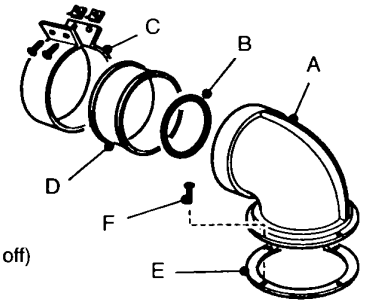

Fig. 4

Installation instructions included as necessary with each kit.

1.1 General Information

Both the user and the manufacturer rely heavily on the installer, whose job it is to install the combination boiler, and connect it to a correctly designed heating system. Acquaint yourself with the British Standards concerning installation requirements. If you need advice on any points, Potterton's Service Operations will be pleased to help (see back page). It is recommended that tools suitable for brass fittings are used, and have a capability to accommodate hexagon sizes up to 50mm.

Codes Of Practice

I.E.E Regulations
Model Water Bye Laws
Building Regulations/Building Standards for Scotland.
Health and Safety Document No.635. (The Electricity at Work Regulations 1989)

BS. 6891	Installation of low pressure pipes.
BS. 6798	Installation of gas boilers of rated input not exceeding 60kW.
BS. 5449	Forced circulation hot water C.H. systems. Including smallbore and microbore domestic central heating systems.
BS. 5546	Installation of gas hot water supplies for domestic purposes.
BS. 5440:1	Flues (for gas appliances of rated input not exceeding 60 kW).
BS. 5440:2	Air supply (for gas appliances of rated input not exceeding 60 kW).
BG. DM2	Guide for gas installation in timber framed buildings.

It is important that no external control devices e.g. flue dampers, economisers etc., be directly connected to this appliance unless covered by these Installation and Service instructions or otherwise recommended by Potterton in writing. If in doubt please enquire.

Any direct connection of a control device not recommended by Potterton could invalidate the certificate and the normal appliance warranty and could also infringe the Gas Safety Regulations.

Manufacturers instructions must not be taken in any way as over-riding statutory obligations.

Gas Supply

The local Gas Region should be consulted, at the installation planning stage, in order to establish the availability of an adequate supply of gas.

An existing service pipe must NOT be used without prior consultation with the Local Gas Region.

A gas meter can only be connected by the Local Gas Region, or by a Local Gas Region Contractor.

An existing meter should be checked, preferably by the Gas Region, to ensure the meter is adequate to deal with the rate of gas supply required.

Installation pipes should be fitted in accordance with BS 6891.

Pipework from the meter to the combination boiler must be of an adequate size.

Do NOT use pipes of a smaller size than the combination boiler inlet gas connection (15mm).

The complete installation must be tested for gas soundness and purged as described in BS 6891.

Health and Safety Information for the Installer and Service Engineer

Under the Consumer Protection Act 1987 and Section 6 of the Health and Safety at Work Act 1974, we are required to provide information on substances hazardous to health. Small quantities of adhesives and sealants used in the product are cured and present no known hazards. The following substances are also present.

Insulation and Seals

Material - Ceramic Fibre. Alumino - Silicone Fibre.
Description - Boards, Ropes, Gaskets.

Known Hazards - Some people can suffer reddening and itching of the skin. Fibre entry into the eye will cause foreign body irritation. Irritation to respiratory tract.
Precautions - People with a history of skin complaints may be particularly susceptible to irritation. High dust levels are only likely to arise following **harsh** abrasion.
In general, normal handling and use will not present discomfort, follow good hygiene practices, wash hands before consuming food, drinking or using the toilet.
First Aid - Medical attention must be sought following eye contact or prolonged reddening of the skin.

Heat Exchanger

Material - Copper with lead/tin coating.
Description - Finned copper tube.

Known Hazards - Inhalation or ingestion of lead dust or fumes may cause headache and nausea.
Precautions - Unused heat exchangers present minimal risk to health other than normal hygiene practices would demand regarding washing before eating etc. Deposits found on or below a heat exchanger that has been in use could contain lead oxide. Avoid inhalation by using a vacuum cleaner in conjunction with other cleaning tools when servicing the appliance.

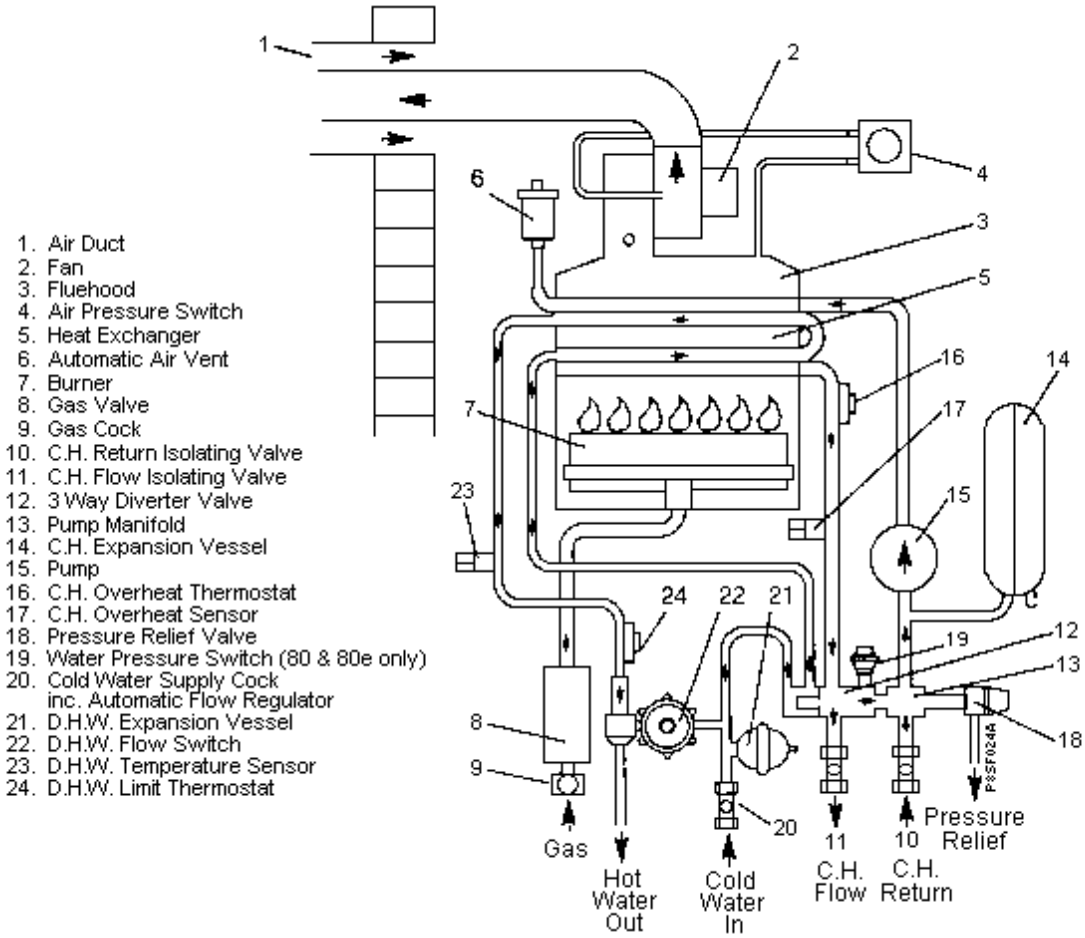

Fig 5

1.2 Location Of Boiler

In siting the combination boiler, the following limitations, MUST be observed:

a) The position selected for installation should be within the building, unless otherwise protected by a suitable enclosure. It must allow adequate space for installation, servicing and air circulation around the appliance.

b) This position MUST also allow the chosen flue termination to be made correctly. The boiler must be installed on a flat vertical wall which is capable of supporting the weight of the appliance and any ancillary equipment.

The appliance may be installed on a combustible wall, subject to the requirements of the Local Authorities and Building Regulations.

IMPORTANT NOTICE

If the combination boiler is to be fitted in a timber framed building it should be fitted in accordance with the British Gas publication 'Guide for Gas Installations in Timber Frame Housing'. (Reference DM2).

If in doubt advice must be sought from the Local Gas Region of British Gas.

The combination boiler may be installed in any room or internal space, although particular attention is drawn to the requirements of the current I.E.E. Wiring Regulations, and in Scotland, the electrical provisions of the Building Regulations applicable in Scotland, with respect to the installation of the combination boiler in a room or internal space containing a bath or shower.

Where a room-sealed appliance is installed in a room containing a bath or shower, any electrical switch or appliance control, utilising mains electricity should be so situated that it cannot be touched by a person using the bath or shower.

A compartment used to enclose the combination boiler MUST be designed and constructed specifically for this purpose. An existing cupboard, or compartment, may be used provided it is modified accordingly. See Section 1.4 Air Supply.

Where installation will be in an unusual location, special procedures may be necessary. BS 6798 gives detailed guidance on this aspect.

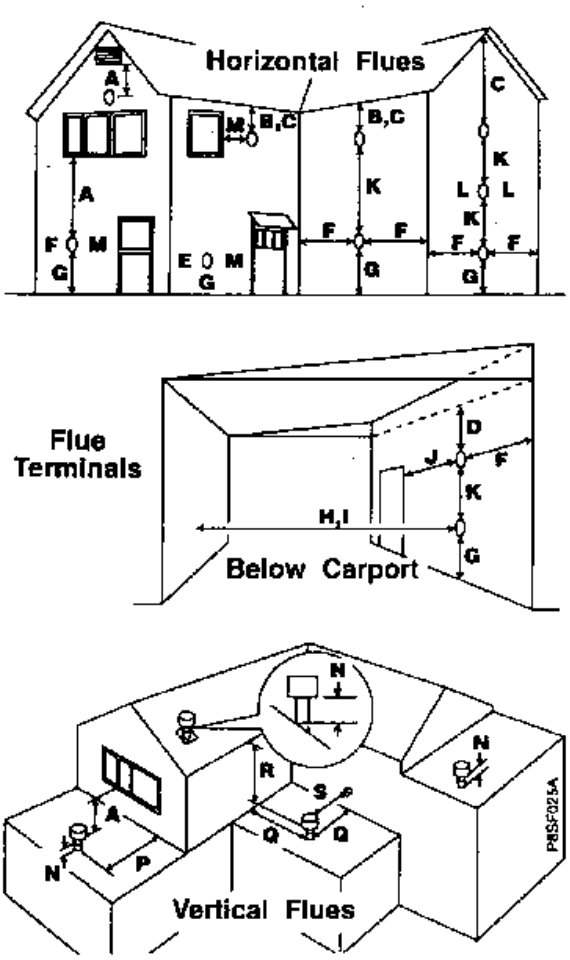

Fig 6

POSITION		MIN. DISTANCE mm
A	DIRECTLY BELOW AN OPENABLE WINDOW, AIR VENT, OR ANY OTHER VENTILATION OPENING	300
B	BELOW GUTTER, DRAIN/SOIL PIPE	75
C	BELOW EAVES	200
D	BELOW A BALCONY/CARPORT ROOF	200
E	FROM VERTICAL DRAIN PIPES AND SOIL PIPES	75
F	FROM INTERNAL OR EXTERNAL CORNERS	75
G	ABOVE ADJACENT GROUND OR BALCONY LEVEL	300
H	FROM A SURFACE FACING THE TERMINAL	600
I	FACING TERMINALS	1,200
J	FROM OPENING (DOOR/WINDOW) IN CARPORT INTO DWELLING	1,200
K	VERTICALLY FROM A TERMINAL ON THE SAME WALL	1,500
L	HORIZONTALLY FROM A TERMINAL ON THE SAME WALL	300
M	ADJACENT TO OPENING	300
N	ABOVE ROOF LEVEL (TO BASE OF TERMINAL)	300
P	FROM ADJACENT WALL TO FLUE	210
Q	FROM INTERNAL CORNER TO FLUE	230
R	BELOW EAVES OR BALCONY	600
S	FROM FACING TERMINAL	1,200

1.3 Flue Terminal and Ducting (Fig: 6 - a, b & c)

The **standard horizontal** flue system is suitable for installations up to 1092mm, measured from the centre line of the boiler outlet to the outside face of the wall. The wall liner enclosed will accommodate thicknesses of 400mm and can be cut to a minimum length of 76mm.

One metre flue extension kits are available to extend horizontal flues to a maximum length of 3078mm.

90° In-line elbow kits and **135° In-line Bend** kits are also available for more flexible siting. Horizontal flues can be set at 45 °angles to the combination boiler, through 360 °, to the miniature terminal on the outside of the building. The siting positions for horizontal flue terminals are shown in Figs. 6. - a) & b).

A **Concentric Vertical flue** system is available which when used in conjunction with **One metre flue extension** kits is suitable flue heights up to 3 metres to terminate through a roof.

A **Twin tube Vertical flue** system is also available for flue heights up to 8025mm when used in conjunction with **one metre twin tube extension** kits.

A **Pitched Roof Flashing** kit and **Flat Roof Flashing** kit are available for use with the vertical flue systems.

135° Off-set kits are available for both concentric and twin tube. The siting of the flue terminal through a roof is shown in Fig 6. - c).

Only the above flue systems should be used with Puma combination boilers.

If a horizontal flue is sited less than 2m above a balcony, above ground, or above a flat roof to which people have access, a suitable terminal guard must be fitted. This serves two purposes, to protect the terminal against damage or interference and to protect passers-by.

Note: Where a flue terminal is installed less than 1 metre from a plastic, or painted gutter, or 500mm from painted eaves, an aluminium shield 1 metre long, should be fitted to the underside of the gutter or painted surface. A suitable wall plate should be fitted to the painted wall surface of a mobile home.

IMPORTANT: It is absolutely ESSENTIAL, to ensure that products of combustion discharging from the terminal cannot re-enter the building, or any other adjacent building, through ventilators, windows, doors, natural air infiltration, or forced ventilation/air conditioning. If products of combustion are found to be re-entering any building, the appliance MUST be turned OFF IMMEDIATELY.

1.4 Air Supply (See Table 2)

Detailed recommendations for air supply are given in BS 5440:2. The following notes are intended for general guidance: It is not necessary to have a purpose provided air vent in the room or internal space in which the combination boiler is installed. If the combination boiler is to be installed in a cupboard or compartment, permanent air vents are required (for cooling purposes) in the cupboard/compartment, at both high and low levels. The air vents must either communicate with a room/or be direct to outside air.

Position of Air Vent	Air from Room/ Internal Space	Air Direct from Outside
High Level	264 cm 40 in	132 cm 20 in
Low Level	264 cm 40 in	132 cm 20 in

Table 2. Air Supply

1.5 Guide to System Requirements (Figs. 7 & 9)

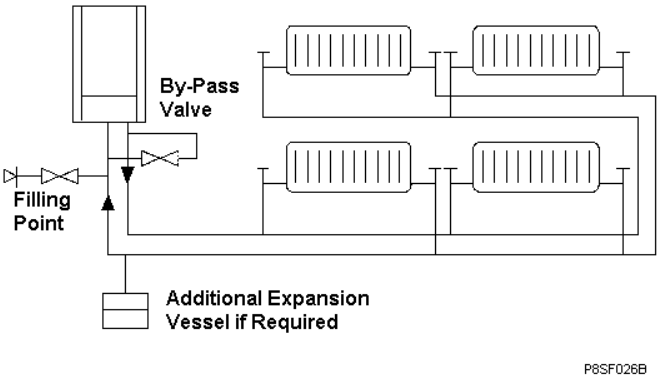

These combination boilers are specifically designed for **sealed systems** only. Therefore the central heating system should be in accordance with the relevant recommendations given in BS 6798 and also, smallbore and microbore systems BS 5449 Part 1.

For correct operation the boilers require a by-pass. A valved by-pass should be fitted and the flow reduced to balance the system correctly. The length of the by-pass pipework is not important.

Note: If the by-pass flow is reduced too much this will cause the appliances to overheat and go to lockout.

The installation should be designed to work with flow temperatures of up to 90°C. All components of the system must be suitable for a maximum pressure of 3 bar (45 psi) and a temperature of 110°C.

The following components are incorporated within the appliance.

a) Circulating pump*.
b) Diverter valve.
c) Pressure Relief valve with a non-adjustable pre-set lift pressure of 3 bar (45 psi).
d) Pressure gauge covering the range 0-4 bar (0-60 psi).
e) 10 litre expansion vessel with initial charge pressure of 1.0 bar (14 psi).
f) Domestic Hot Water flow switch.

* The pump supplied is sufficiently powerful for heating requirements upto 24kW providing the designed temperature drop across the heating system is above 17°C (see pump performance curve).

The central heating output from the boiler can easily be downrated if a lower temperature drop across the system is preferred.

If the central heating system requires an increased pump head a second circulating pump should be installed. The pump must be sited on the return to the boiler and electrically connected using a propriety relay i.e. Drayton RB1 - see Section 2.6.

The domestic hot water system must be in accordance with the relevant recommendations of BS 5546. Copper tubing to BS 2871:1 is recommended for water carrying pipework and MUST be used for pipework carrying potable water. All capillary joints in the D.H.W pipework must be joined with a lead free solder.

Ancillary pipework, not forming part of the useful heating surface, should be lagged to prevent heat loss and any possible freezing, particularly where pipes run through roof spaces and ventilated under-floor spaces.

If the capacity of the central heating system should exceed 100 litres, an additional vessel should be installed on the return to the combination boiler from the heating system (Fig. 7). Guidance on vessel sizing is given in Table 3.

To allow the maximum central heating expansion capacity in the boiler the pre-charge pressure in the central heating expansion vessel must be marginally greater than the initial (cold) system pressure at the appliance (as shown on the appliance pressure gauge).

Draining taps should be at least 1/2 in BSP nominal size and be in accordance with BS 2879.

Safety Valve Setting (bar)	3.0	
Initial System Pressure (bar)	1.0	1.5
Total Water Content of System	VESSEL VOLUME (L)	
litres	litres	litres
25	2.7	3.9
50	5.4	7.8
75	8.2	11.7
100	10.9	15.6
125	13.6	19.5
150	16.3	23.4
175	19.1	27.3
200	21.8	31.2
225	24.5	35.1
250	27.2	39.0
275	30.0	42.9
300	32.7	46.8
325	35.7	50.7
350	38.1	54.6
375	40.9	58.5
400	43.6	62.4
425	46.3	66.3
450	49.0	70.2
475	51.8	74.1
500	54.5	78.0
For system volumes other than those given above, multiply the system volume by the factor across	0.109	0.156

Table 3. Expansion Vessel Requirements
Deduct from the value given in the table the 10 litre expansion vessel supplied.

To obtain economical use of the appliance it is advisable to fit external controls. The controls can take the form of:-

Time clock (two internal options are available
Part No. 31-19053 - Electro-mechanical)

b) Room thermostat
Thermostatic radiator valves (TRV's)
Zone valves

A combination of these controls will produce economical and

advisable to control the temperature of the main living area with a room thermostat and other areas by

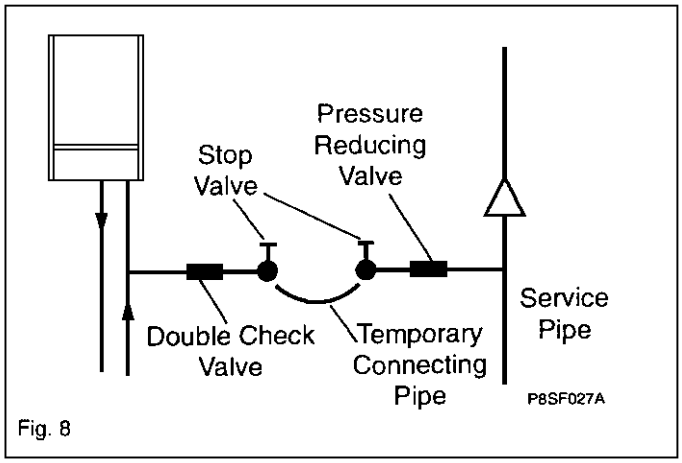

Fig. 8

Frost Protection

The appliance is fitted with an internal Frost Thermostat,

appliance. If any other part of the central heating system requires frost protection, an external frost thermostat must

1.6 Mains Water Feed: Central Heating

system to facilitate filling. There must be no direct connection to the
return valve, without the approval of the Local Water Authority.

Note: The Puma combination boiler range is fitted with a design which does not have a manual operation lever to aid filling. Therefore to ease filling of the

diverter and must be opened during filling until water flows out. The valve should then be closed. ( ).

(1) DIRECT METHOD

A detachable flexible hose is connected to a stop valve fitted to an outlet on the service main. The other end of the hose

valve. The double check valve is fitted to an inlet connection on the central heating return pipe under the appliance. The mains pressure is excessive a pressure reducing valve shall be

permanent part of the system and shall be fitted in the order stated.

A stop valve complying with the requirements of BS1010 Part 2, (the temporary hose from the draw off tap shall

b) Double check valve of an accepted type.

The system may be filled through a self contained unit

necessary, an automatic pressure-reducing valve or flow restrictor.

the system to a minimum of 1.0 bar (14 p.s.i.) measured at

The cistern should be supplied through a temporary connection from a service pipe or cold water distributing

heating system to provide limited water make-up.

Provisions for make up water

system by re-pressurisation of the system. See section on Methods of Filling.

"Material and Installation Specifications for Domestic Central Heating and Hot Water".

Installation to an Existing Central Heating System

only, therefore if the existing system is of the open type it will

Before installing a new combination boiler to an existing system flush out the old system with a recommended

Also check pipework and renew any corroded pipework or fittings. Valve glands must be re-packed or replaced

1.8 Hard Water Areas

(above 200 p.p.m.) it is essential that a suitable water

be installed in the mains water supply.

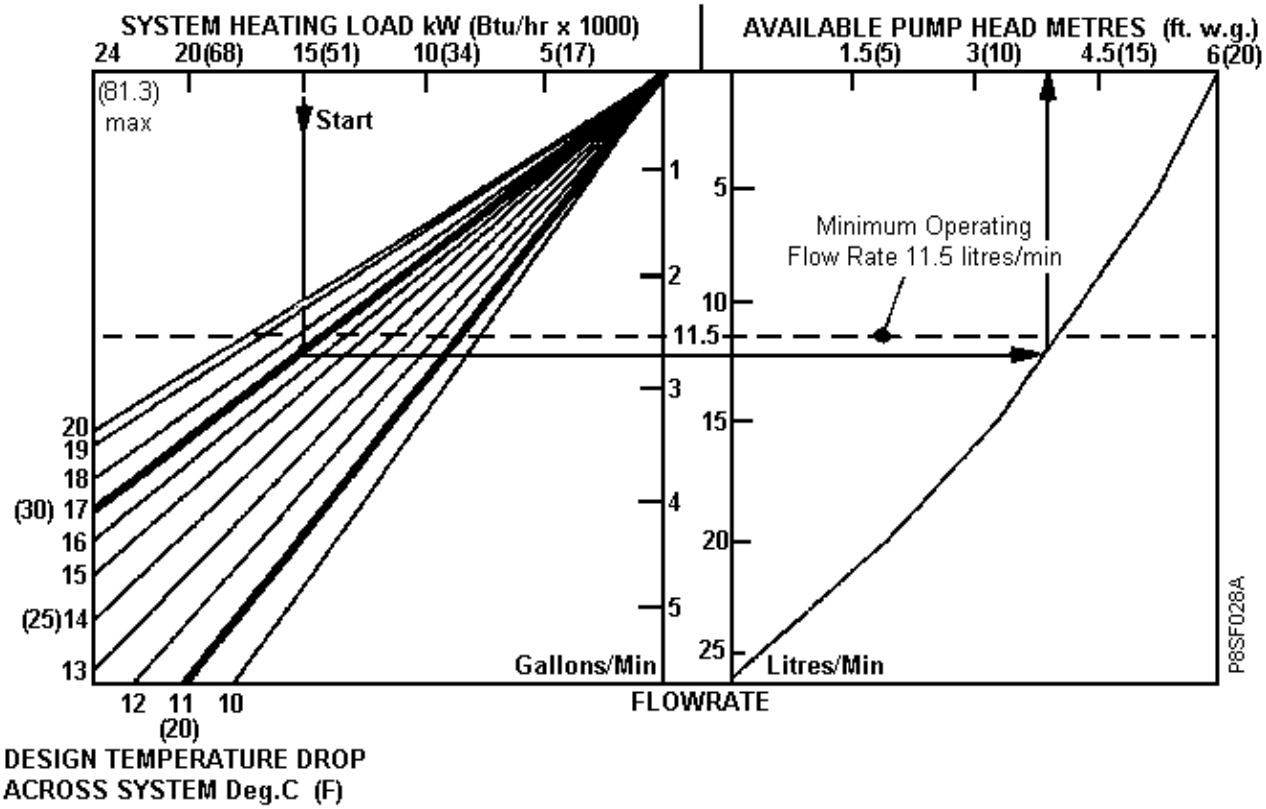

Fig 9

To assess water hardness, immerse a test strip for about one second in a water sample (NOT IN RUNNING WATER) so as to moisten all the zones.

Inspect the strip after 1-2 minutes, check the zones, if two or more zones have changed colour the hardness of the water is above 200 p.p.m. and a water treatment device will be required.

1.9 Pump Performance Curve

The circulating pump fitted within the appliance should be capable of satisfying most system requirements. For central heating systems greater than 15kW it may be necessary to use a higher "design temperature drop across system" to meet the system pump head requirement. The design temperature drop should not exceed 20°C (36°F). Fig. 9 indicates the amount of pump head available for the system. The boiler resistance is already taken into account in this curve.

HOW TO USE FIG. 9.

Starting with the required SYSTEM HEATING LOAD, draw a vertical line downwards so that it intersects the chosen SYSTEM DESIGN TEMPERATURE DROP line, normally this would be 11°C (20°F) although up to 17°C (30°F) can be used without increasing radiator sizes. From this intersection point draw a horizontal line so that it intersects the PUMP CURVE. From this intersection draw a vertical line upwards.

The AVAILABLE PUMP HEAD can now be read from the horizontal scale, and the corresponding FLOW RATE from the vertical scale in the centre of the chart.

The system must be designed so that its hydraulic resistance does not exceed the available head unless an additional circulating pump is fitted.

If the designed flow rate through the boiler is less than 11.5 l/min, the boiler could be noisy and ultimately overheat. See note on system by-pass in Section 1.5.

Central Heating Range Rate

For most installations the boiler will automatically adjust the central heating output to match your heating system requirement.

Systems which have very low water content and a low heating requirement may benefit by reducing the maximum boiler output. This is achieved by rotation of the adjustment knob, located on the electronic modulation control board. (Fig. 30).

The boiler central heating output can be adjusted between the maximum and minimum values stated on the data badge. Operation of this adjuster will not affect the maximum boiler output when domestic hot water is being drawn off.

1.10 Electrical Supply

Wiring external to the appliance MUST be in accordance with the current I.E.E. Regulations for Electrical Installations, and any Local Regulations which apply. The combination boiler is supplied for 230 Volts ~ 50 Hz, Single Phase. **To protect the appliance it is essential that the electrical supply is fused at 3 A rating.**

THIS APPLIANCE MUST BE EARTHED The method of connection to the mains electricity supply must provide means of completely isolating the electrical supply to the combination boiler and its ancillary controls. The appliance is designed to be the wiring centre for the installation, therefore no additional live supplies are required from either timers or room thermostats.

Isolation is preferably by the use of a fused three-pin plug and unswitched shuttered socket-outlet, both complying with the requirements of BS 1363. OR a **3 A fused** double-pole switch, having a 3mm contact separation on both poles can be used. It is important that the point of connection to the mains should be readily accessible and adjacent to the combination boiler.

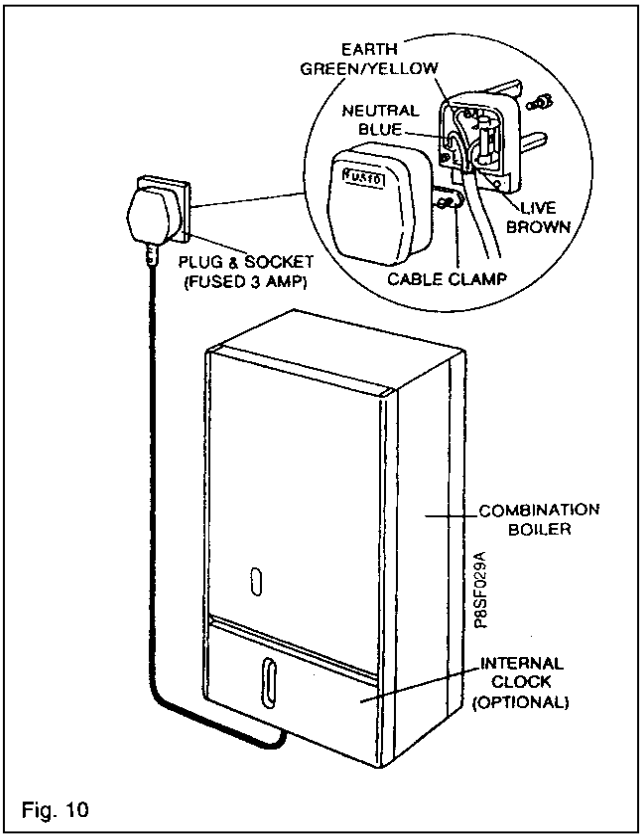

Fig. 10

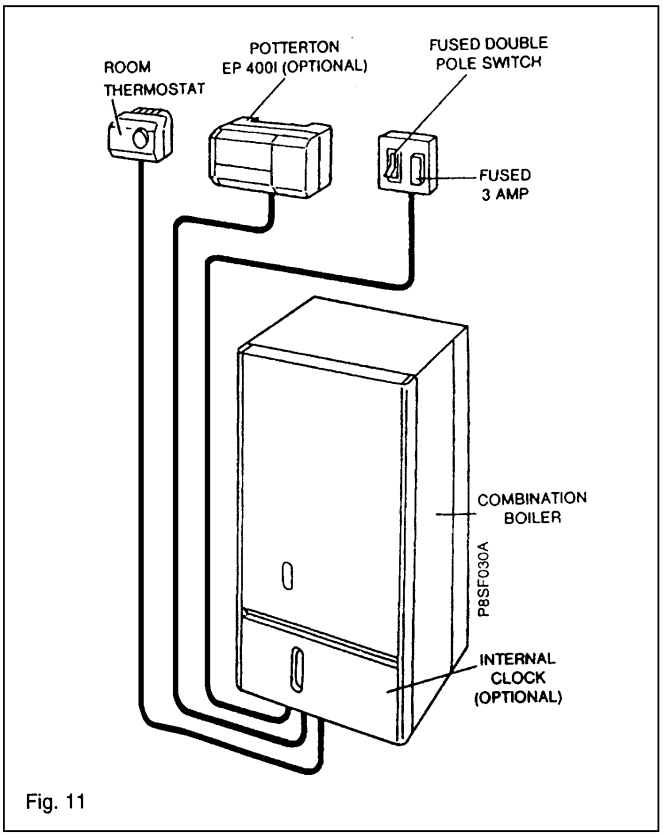

Fig. 11

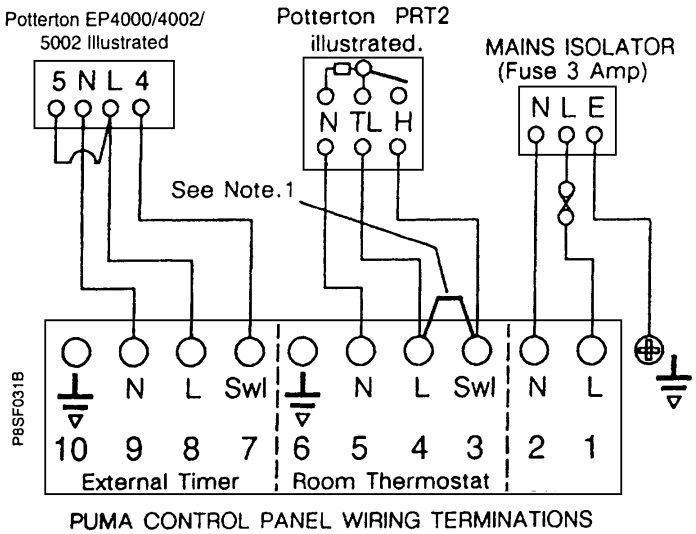

Notes:

1. If a Room Thermostat is to be fitted the Link Wire between 3 & 4 on the Wiring Panel must be removed. (See Fig.15).

2. If an External Timer is not required, two Optional Internal Timers Kits are available for fitment to the Puma range.
(Part No. 31-19053 Electro-mechanical).
(Part No. 31-19054 Electronic).

3. If using an Integral Timer, connect to Plug 11 on the main P.C.B.
If an Internal (or External Timer) is not to be installed, the Central heating Switch on the front of the appliance must be set to the 'Constant' position.

4. If a Frost Protection Thermostat is to be fitted. (See sections 2.6 & 11).

Fig. 12

1.11 Clearances around the Appliance.

Side Clearance:

The position selected for the appliance must provide the following minimum clearance which is necessary for operation and servicing, 25mm each side (side clearances have been incorporated into template).

Top Clearance:

The top clearance should be a minimum of 160mm, but 300mm is preferred to allow removal of the central heating expansion vessel, without removing the appliance from the wall, if replacement is required.

Bottom Clearance:

A bottom clearance of 220mm is required between the appliance and any surface.

Frontal Clearance:

A minimum of 500mm is required in front of the appliance for access during servicing, the front clearance can be reduced providing the door/cover can be removed to expose the entire case front.

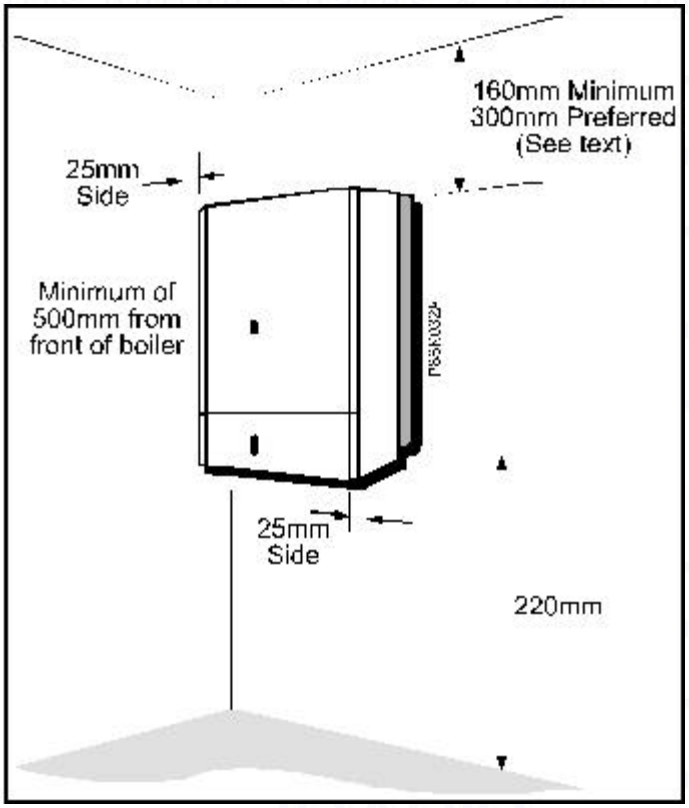

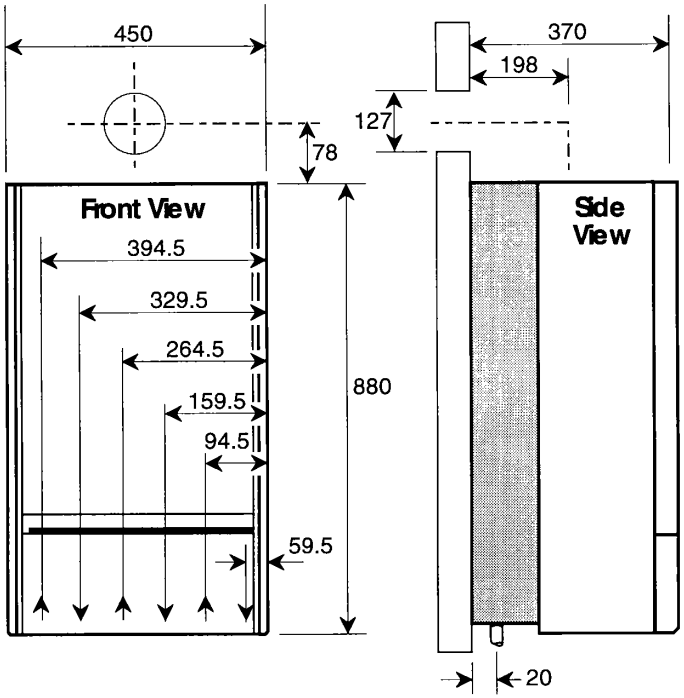

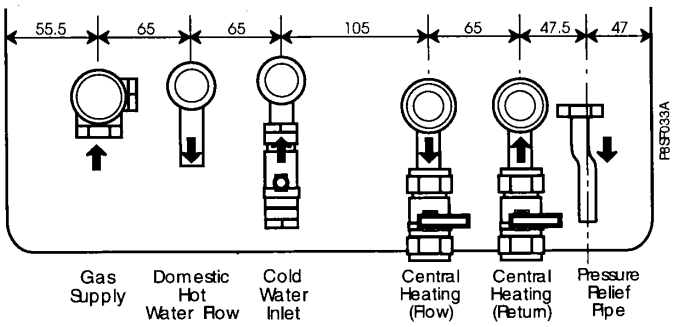

It is **MOST IMPORTANT** that the appliance is installed in a **VERTICAL POSITION**, with the flue system passing through the wall or ceiling in a **Horizontal** or **Vertical** plane. A minor deviation from the horizontal is acceptable, provided that this results in a downward slope of the flue system away from the combination boiler.

2.1 Unpacking

The appliance will arrive on site in two separate cardboard cartons.

(1). The Large Carton. The Boiler - Containing:-

i) The Combination appliance c/w User Instructions (**Note:** Pipe tails and valves supplied on a vacuum formed card).
ii) These Installation and Service Instructions.
iii) The wall fixing template.

(2). The Small Carton. The Flue System.

There is a range of horizontal and vertical flue systems and optional packs (i.e. extensions / in-line bends etc.) to suit your requirements which are supplied separately from the boiler.

Installation instructions are included with each main pack. Make sure you have the flue you require.

a) Unpack the cartons and check the contents.

b) Remove the white front case as follows; undo the two securing screws at the base of the panel, pull the base of the panel forward approx. 50mm and lift off the supporting top hooks. (Fig. 15)

c) Remove the base cover by removing the two fixing screws and push the cover towards the rear to release

d) Each side panel can now be individually removed by removing the two front fixing screws, loosening the lower rear fixing screw and sliding the panel upwards to unhook from the upper rear fixing. Place each panel safely to one side.

e) Position the appliance onto its side and remove the four screws retaining the lowest rear cross brace. This brace is for transit purposes only and should be discarded. Remove all plastic plugs from the pipes.

f) At this point follow the Installation Instructions supplied with the Flue System, then proceed as follows:-

g) Boiler Connections.
All connections to the appliance are supplied unassembled in the boiler carton on a vacuum formed card. Remove all fittings and assemble to the appliance. (Fig. 16).

Note: When fitted, the Red levered central heating tail (C.H.flow) should be to the left of the Blue.

2.2 Gas Connection
(Fig. 16)

A minimum gas pressure of 20 mbar (8" w.g.) must be available at the combination boiler inlet at full flow rate, (see Technical Data).

Install a gas supply pipe not less than 15mm diameter copper to the combination boiler and connect to the gas service cock.

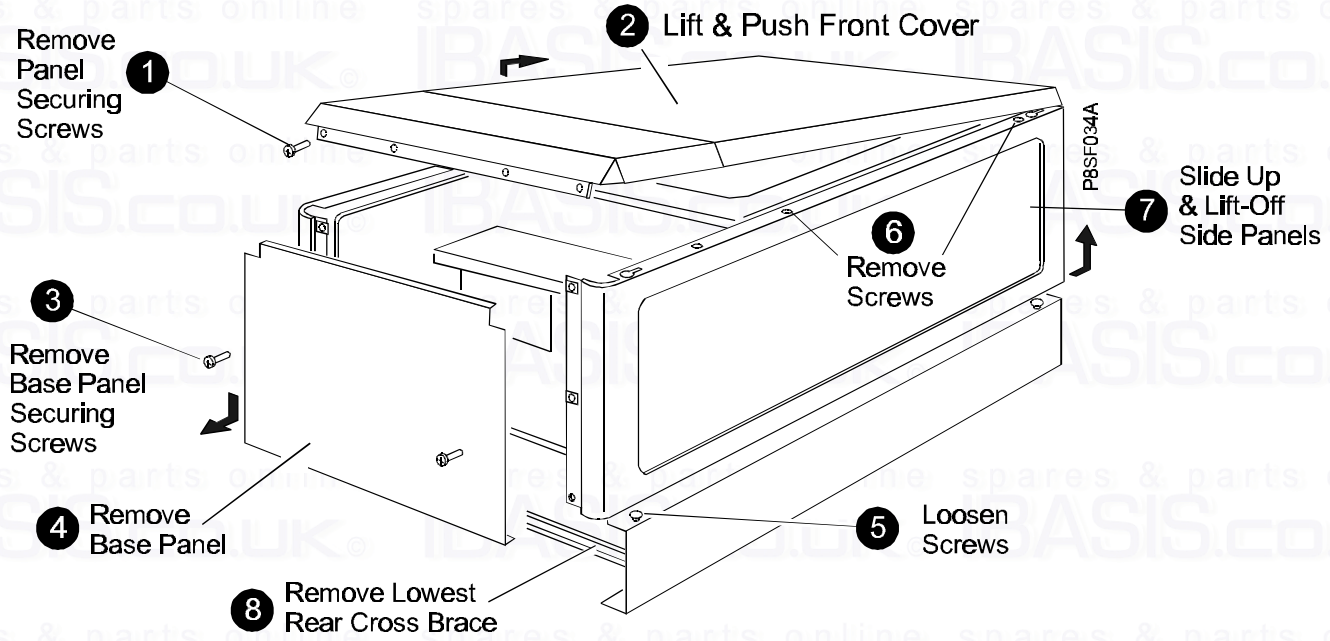

Fig 15

2.3 D.H.W. Supply

a) The domestic hot water circuit does not need a pressure relief valve, but it is essential to ensure that the pressure of the cold water supply does not exceed 10 bar (145 lb/in), if in doubt it is advisable to install a pressure reducing valve. The minimum pressure needed to operate the domestic hot water system is 1 bar with a flow of approximately 2.5 litres per minute.

b) Flush out all foreign matter from the supply pipe before connecting to the appliance.

c) Connect the cold water supply to the 15mm isolating cock.
Connect the hot water outlet pipe using a 15mm compression fitting.

Note: 80 & 80e only, until hot water is available, the flow will be restricted.

Note: The Cold Water Supply Isolating Cock incorporates an automatic flow limiting device and water strainer. If a lower flow is required there is a throttle valve located below the D.H.W mini expansion vessel.

SHOWERS

If a shower control is to be supplied from the Combination unit it should be of the type which incorporates a pressure balancing valve (i.e. MIRA 415 EQUAMATIC).

If the shower control is existing and is of a mechanical type, it may be necessary to fit a drop tight pressure reducing valve to the mains supply. Refer to the Shower Manufacturers instructions.

Note: Showers with a loose flexible hose may require the fitting of a double check valve, to comply with water Bye-law 17.

2.4 C.H. Water Connections

(Fig. 16)

a) Before any central heating connections are made to the combination boiler, all system valves should be opened and the system thoroughly flushed out with cold water.

b) Connect the central heating return pipe to the isolating cock identified by a Blue lever. (right hand of the two pipes)

c) Connect the central heating flow pipe to the isolating cock identified by a Red lever. (left hand of the two pipes)

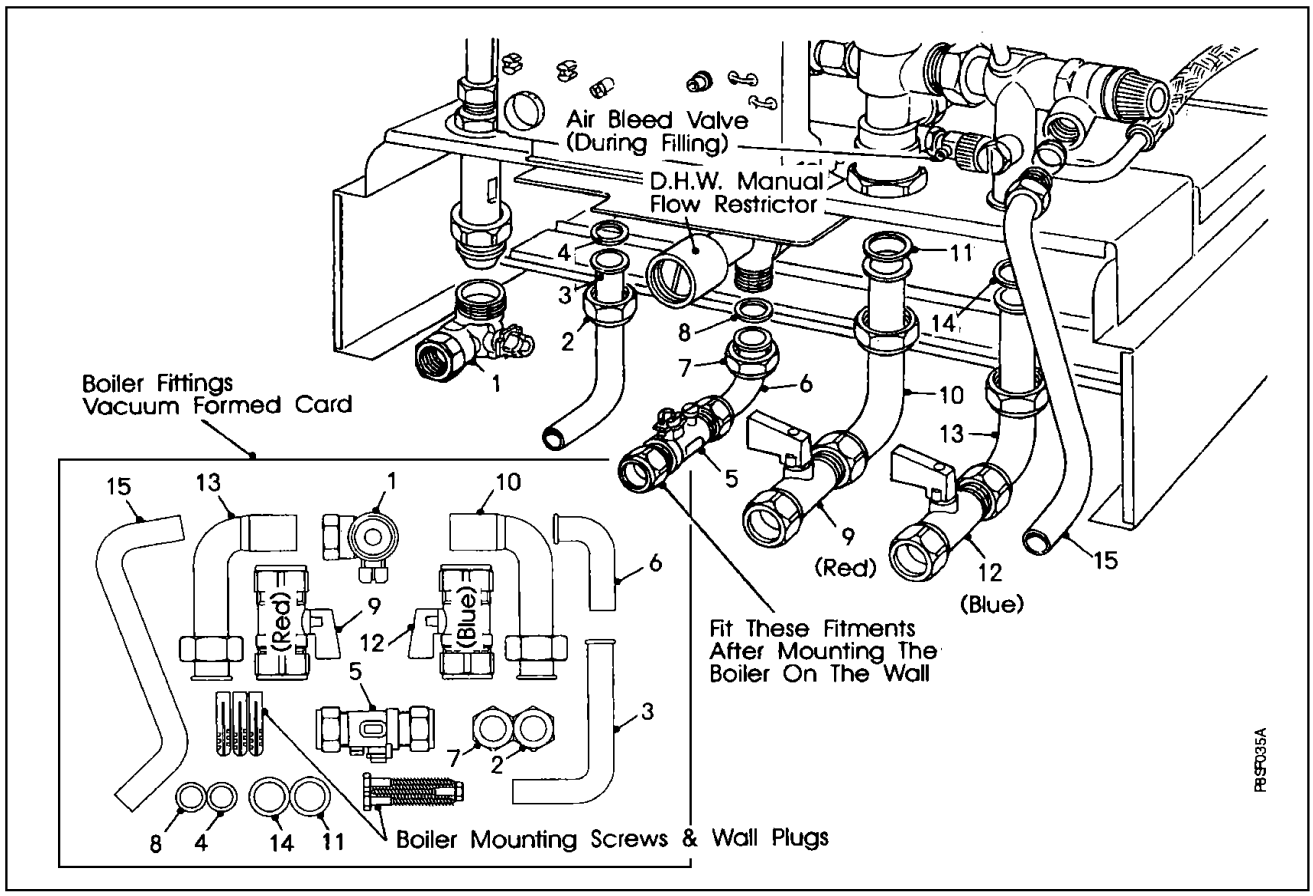

Fig 16

2.5 Pressure Relief Valve

The pressure relief valve is pre-set at 3 bar.

Install a pressure relief valve discharge pipe, not less than 15 mm diameter and connect to the pressure relief outlet connection using a 15mm Compression fitting. The pipe run should be as short as possible, run continuously downwards and discharge to the outside of the building, where possible over a drain. The pipe end should be directed towards the wall. (Fig. 17) The discharge point must be such that it will not be hazardous to occupants or cause damage to external electrical components or wiring.

IT MUST NOT DISCHARGE ABOVE AN ENTRANCE, OR WINDOW, OR ANY TYPE OF PUBLIC ACCESS. THE INSTALLER MUST CONSIDER THAT THE OVERFLOW COULD DISCHARGE BOILING WATER.

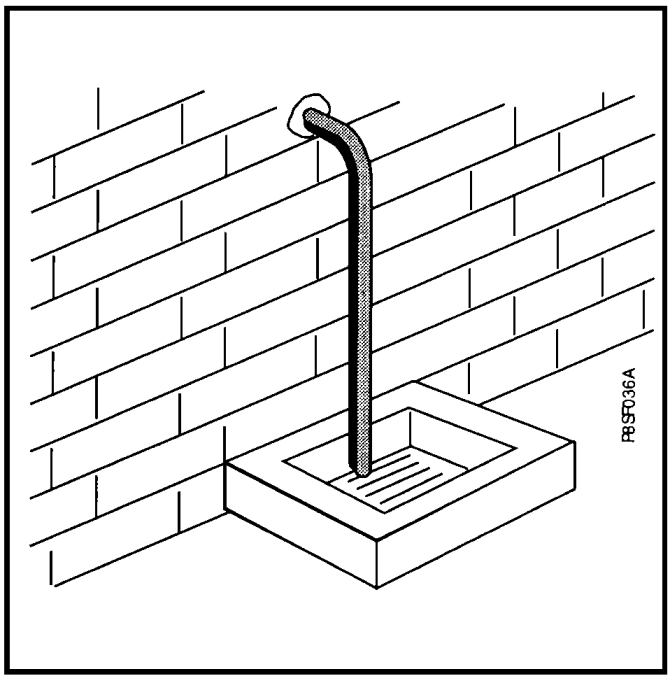

Fig 17

2.6 Wiring the Appliance

The internal wiring of the appliance is shown in Figs. 42 & 46. The wiring diagram is also on the inside of the front casing panel.

a) Undo the single retaining screw on the top of the controls panel and allow the panel to swing down.
b) Using PVC insulated cable of not less than 0.75 mm² (24/0.2mm to BS 6500 Table 16), wire up the panel referring to the termination label. (Fig. 18).

Note: Ensure that all cables pass through the wiring panel bush/s and are securely fixed by the cable clamp/s.

If a room thermostat is to be fitted, remove the Red link wire between terminals 3 and 4 and discard prior to wiring in the thermostat. If no room thermostat is to be fitted retain link wire.
If a programmable room thermostat is to be used it must be fitted in place of the external timer and the link between 3 & 4 retained.
If the installation does not have an internal or external timer the central heating switch on the front of the appliance must be set to Constant during periods when central heating is required.
If using an internal timer connect the timers lead to PL11 on the modulation control board. (Fig. 30).
If an external frost thermostat is required it should be connected to terminals 3 and 8. For the frost thermostat to function the boiler switch must be set to 'On'.

Secondary Pump. If a second pump is to be fitted to the central heating system it should be sited on the return to the boiler and electrically connected using a proprietary relay as shown in Fig. 19.

c) Check all wiring and reposition the control panel.
d) Secure with screw provided.

Note: The electrical mains supply must be fused at 3 A, and the connection must be made to the wiring panel in such a way that should the lead disengage from the cable clamp, the current carrying conductors become taut before the earth conductor.

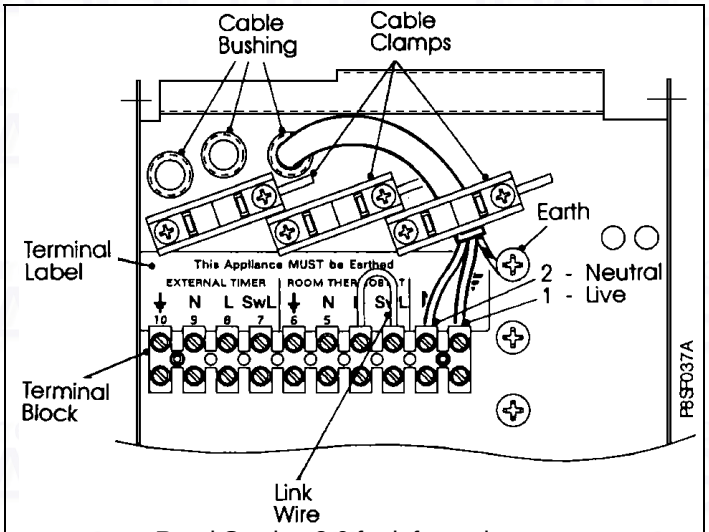

Read Section 2.6 for information on Thermostats and Timers

Fig 18

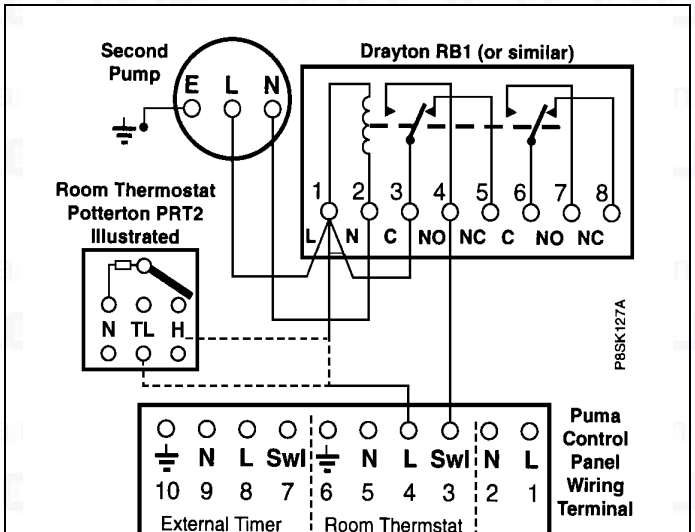

Fig 19

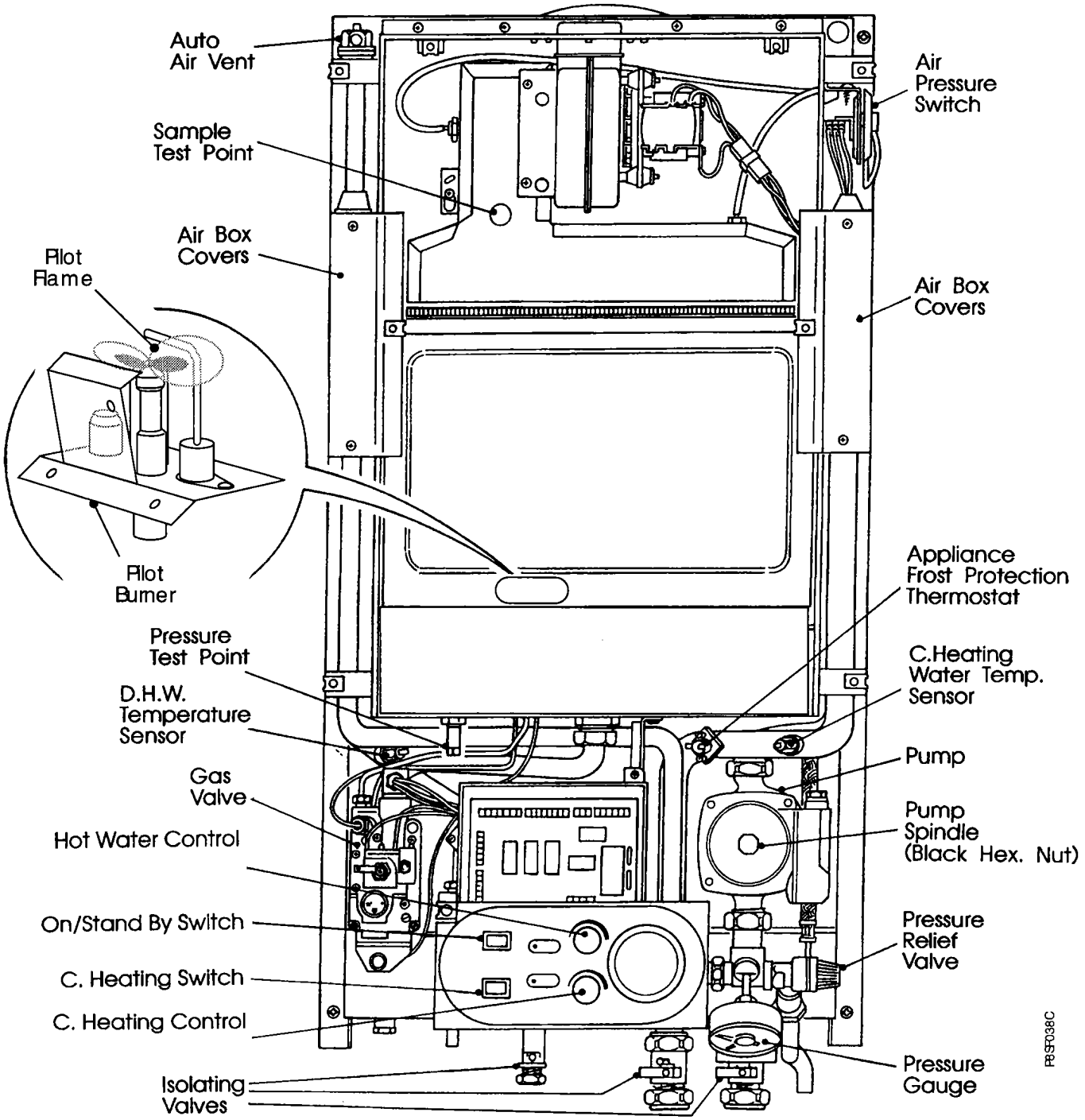

Fig 20

The Puma combination boiler has been through a rigorous test procedure after manufacture and should not require any further adjustment. If in the unlikely event of the appliance not operating correctly please turn to the Control Flow, Functional Flow and Fault Finding charts that start on page 42.

3.1 Electrical Installation

Conduct a preliminary electrical test by checking: for short circuits, fuse failure, incorrect polarity, earth continuity and resistance to earth. If a fault has occurred on the appliance, the fault finding procedure should be followed. See pages 39 & 48.

3.2 Gas Installation

The whole of the gas installation including the meter, should be inspected and tested for soundness and purged in accordance with the recommendations of BS 6891. Purging air from the gas line may be carried out by loosening the union on the gas service cock and purging. Re-tighten the union when completed and check for gas soundness.

N.B. Open all doors and windows, extinguish naked lights and DO NOT SMOKE when carrying out the gas soundness tests and purging.

3.3 Initial Lighting
(Fig. 20)

WARNING: Before operating the appliance, check that the air box covers are correctly fitted. The outer white front case should be left off for the time being. Carry out the following procedure in the order listed.

a) Thoroughly flush out the whole of the heating system with cold water.

b) Fill and vent the system until the pressure gauge registers 1.5 bar (21.5 psi), examine for leaks and rectify. Do not overtighten joints. During filling ensure that the plastic screw on top of the automatic air vent is not tight and air can escape. **Do not tighten the air vent screw after filling**. To ease filling an air bleed valve (Fig. 16, Page 17) is fitted to the diverter valve which must be opened until water flows out. The valve should then be closed.

c) Check the operation of the pressure relief valve by further raising the water pressure until the valve lifts. This should occur at approx. 3 bar, indicated on the appliance pressure gauge. If installing in a low pressure area (below 3 bar) fill to the maximum pressure possible.

d) Release water from the system using the pressure relief valve until the minimum system design pressure is reached. (Generally 1.0 bar). To allow maximum central heating expansion capacity the pre-charge pressure in the central heating expansion vessel must be marginally greater than the initial (cold) system pressure at the appliance. If the position of the appliance in the system will cause the pressure at the appliance to be greater than 1 bar (14.5 lb/in) increase the pre-charge pressure in the central heating expansion vessel to a marginally greater value prior to filling the system. Set the red pressure gauge indicator to coincide with this pressure. Check the pump spindle is free to rotate by unscrewing the black octagonal nut, withdraw to engage the motor spindle. The knob should rotate freely. The pump will normally self vent the air from the rotor chamber and bearings within a short while of switching on, however should manual venting be required, sideways pressure should be applied and maintained to the knob until a small amount of water becomes visible. The manual restart knob should now be screwed back to its original position, finger tight.

e) Check that the boiler switch is set to Stand-by and the central heating switch is set to the Off position. (Mid position)

f) 80 & 80e. Check that the Hot Water and Central Heating temperature controls on the control panel are set to their lowest setting.

g) Check the Gas service cock is On.

h) Check that the boiler isolating valves and radiator valves are open.

i) Check that any time controls are in an On condition, and any room thermostats are calling for heat.

j) Switch On the main electricity supply to the combination boiler at the wall isolating switch. The Mains light will now illuminate.

k) Loosen or remove the outlet (burner) pressure test point screw in the gas valve body (Fig. 29), and connect via a flexible tube to the + or Hi side of pressure gauge. Then connect the - or Lo side of pressure gauge via another flexible tube to the pressure test point in the base of the inner casing. (Fig. 20)

On Permanent Pilot version only, light the pilot:

i. Press control knob in lightly and turn. Align Off position with marker .
ii. Press control knob in lightly and turn. Align ignition position with marker .
iii. Press control knob in firmly and hold, at the same time press the ignition button. The pilot flame should be visible at the pilot window. If not press the ignition button until the flame is established.
iv. When the flame is established hold the control knob in for approximately 20 seconds before releasing. The pilot flame should remain alight.
v. Press control knob in lightly and turn, align full flame position with marker .

l) Switch the Boiler switch to On.

IMPORTANT
Commission the boiler in Central Heating Mode before Domestic Hot Water Mode

Adjusting the Central Heating Range Rate Pressure. See boxed Warning on page 21.

This pressure can only be measured in the central heating mode.
(i) Ensure all D.H.W outlets are turned off.
(ii) Ensure all radiator control valves are fully open and any room thermostats are calling for heat.
(iii) 80 & 80e. Set central heating temperature control knob to maximum.
(iv) Set central heating switch to Constant. The burner will now light but remain at low burner pressure for approximately 2 minutes. After this time it will go to maximum pressure. Allow the central heating to run for 5 or 10 minutes.
(v) Using the range rate adjustment knob on the electronic control board (Fig. 30) adjust to the values for Range Rate in Table 4 on page 22.

m) 80 & 80e. Turn the Hot Water temperature control clockwise to its maximum setting.

n) Fully open a hot water tap. (After a short delay the main burner will light (on electronic versions the flame light will illuminate.

WARNING:

When the appliance is operating, wiring in the area around the gas valve and printed circuit boards will be live. When it is necessary in the following sections to work in this area temporarily isolate the electrical supply. However this can not be done when adjusting the gas pressure therefore extra care must be taken during this operation. Where it is necessary to disconnect a modulator coil wire (section 3.3 (q).) disconnection should be made with the use of electrically insulated pliers and the connection should be taped.

WARNING: The pipes under the appliance could be hot, avoid contact with bare skin.

p) Fully open all domestic hot water outlets, vent flexible hose connections to the washing machine and dishwasher. Remove air from the domestic hot water distribution system. If this is not done the internal water flow switch will not function properly. Test for gas soundness around the gas components using leak detector fluid.

q) Check the minimum burner pressure (see Table 4) by disconnecting one of the Modulating Coil electrical connections (wire colours Red or Black).

Note: The modulating coil connections are 24V only. Figs. 28 & 29.

r) Reconnect and check maximum burner pressure against Table 4. If any adjustment is necessary see Section 3.4, Gas Pressure Adjustment.

Note: The boiler is so designed that if required the central heating output can be down rated to the lowest setting stated on the data plate without affecting the D.H.W output. If adjustment is required see Section 3.4 Gas Pressure Adjustment.

3.4 Gas Pressure Adjustment

Note: The gas pressures are set at the factory (with central heating output set at maximum) and should not require further adjustment. If gas pressure readings are being obtained which differ from that stated in Table 4, check the inlet pressure using the inlet pressure test point on the gas valve (Fig. 29). The inlet pressure should be checked with the appliance at full gas rate, to ensure this occurs put a high water flow through the domestic hot water side of the system.

Note: When checking gas inlet pressure only connect one tube from the measuring manometer's +ve side. Do not connect the -ve tube as with minimum and maximum pressure readings.

Adjustment of the Modulating Valve

Pressures are measured by connecting the +ve connection to the gas outlet and -ve connection to the base of the inner casing as described in Section 3.3 (k).
Set the pressures to the values in Table 4 by adjusting the gas valve in the following manner.

Note: It is important to note the order in which the maximum and minimum pressures are set.

The maximum pressure must always be set before adjustment of the minimum pressure.

Adjusting the Maximum Pressure (Fig. 21)
See boxed Warning on this page.

(i) Cut off cable tie retaining modulator Cover.
(ii) Remove Cover (C) by twisting it anticlockwise 90° and levering off with a small screwdriver.
(iii) With a 10mm spanner turn nut (B), (Clockwise to increase pressure). Adjust to the value for maximum pressure stated in Table 4.

Adjusting the Minimum Pressure (Fig. 21)
See boxed Warning on this page.

This adjustment is only to be made after the maximum setting has been completed.

(i) Disconnect one of the electrical connections of the modulating coil and tape. (24V only)
(ii) Using a 10mm spanner hold nut (B) and adjust screw (A) with a screwdriver (clockwise rotation will increase the pressure). Set to the value for minimum pressure stated in Table 4.
(iii) Reconnect the electrical connection to the modulator.
(iv) Check maximum and minimum settings. Repeat adjustment if required.
(v) Refit cover (C), snap into place and turn.

After the setting operation remove the pressure gauge tubes from the gas valve body and inner casing. Refit the pressure test point screws.

Gas Valve - Electronic

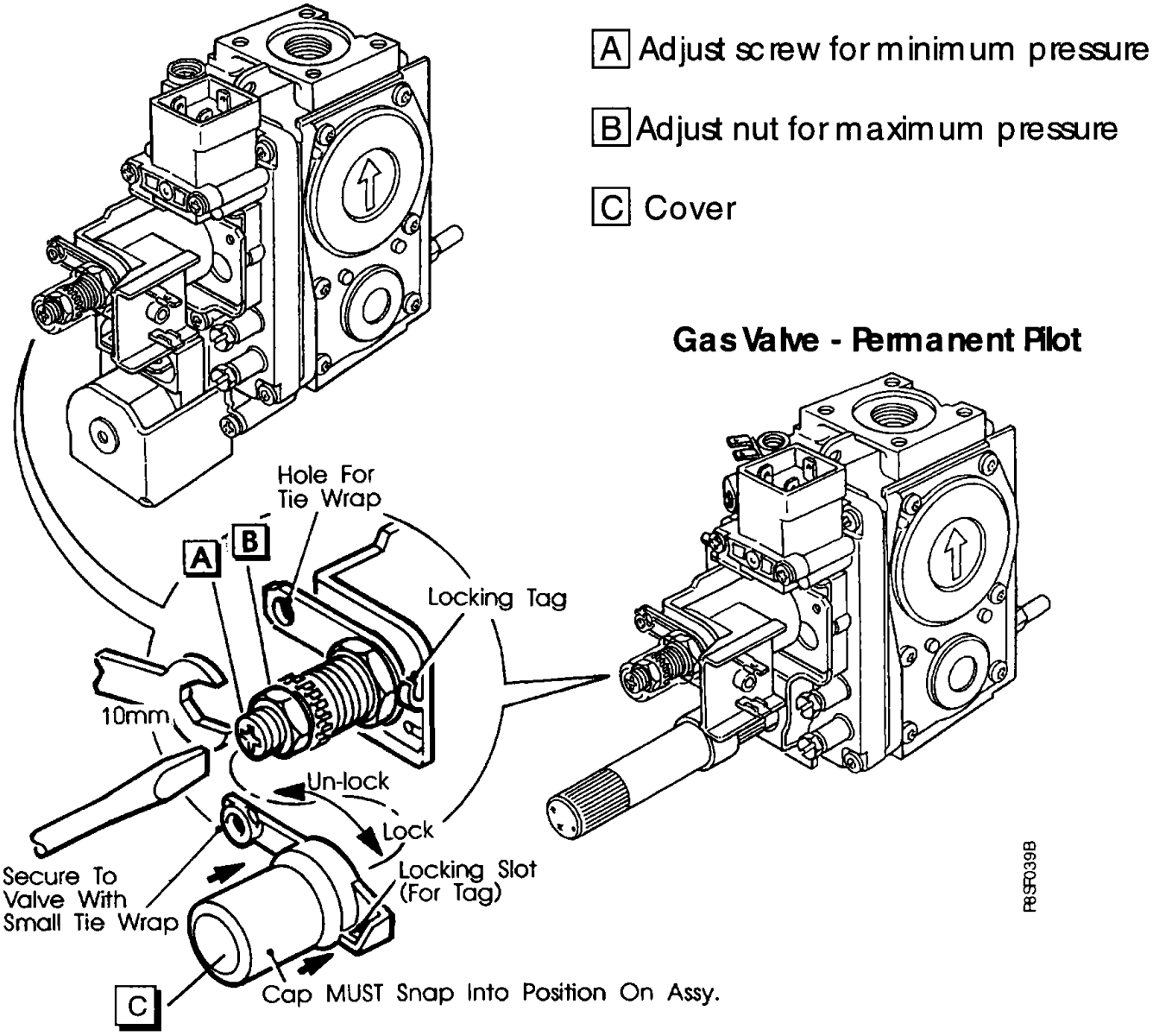

	Setting Pressure	Tolerance	Gas Rate
Maximum Pressure	15.0 mbar	15.2 mbar 14.8 mbar	2.79 m^3/hr 98.1 ft^3/hr
Range Rate	8.3 mbar	8.4 mbar 8.2 mbar	2.10 m^3/hr 73.7 ft^3/hr
Minimum (Ignition) Pressure	3.5 mbar	3.6 mbar 3.4 mbar	1.34 m^3/hr 47.2 ft^3/hr
Inlet Pressure 20 mbar (8" w.g.)			

Table 4. Gas Pressures

3.5 Products Of Combustion Measurement

The combustion performance can be assessed by placing a suitable sampling probe through the access hole in the inner casing door whilst the appliance is running. Typical figures based on a 500mm flue length with the boiler operating at maximum output are:-

CO. 0.002 - 0.005%
CO_2. 4.5 - 5.0%

Replace the screw in access hole after test.

3.6 D.H.W Flow Rate

The appliance contains an automatic flow regulator supplying a nominal flow rate of 10 litres/minute (80 & 80e) and 7.6 litres/minute (Saver). These flow rates will give a nominal temperature rise of 35 ℃ & 45 ℃ respectively. Should it be desired to set the appliance to give a higher temperature rise, the flow rate can be further reduced by using the manual flow restrictor (clockwise to reduce) located in the manifold below the mini expansion vessel - Fig. 22.

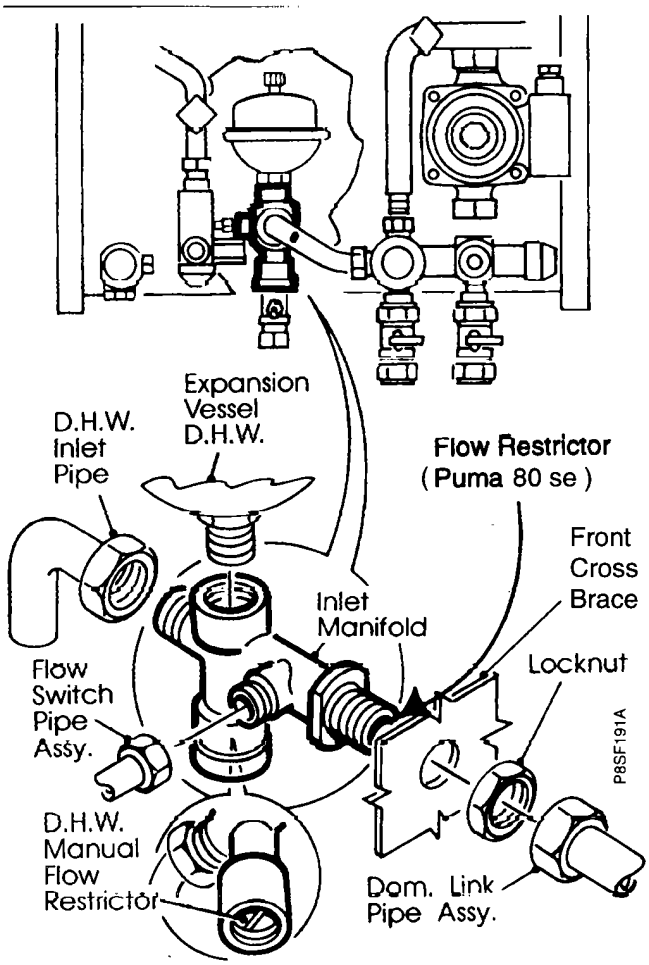

3.7 Central Heating

a) Ensure that all external controls such as a timers are switched On and that room thermostat/s are calling for heat.

b) Set the Central Heating switch to Timed (if system fitted with Timer) or Constant. The appliance will operate in accordance with the pre-selected temperature set on the lower temperature control knob. (Fixed on Saver at 80 ℃).

3.8 Temperature Controls - 80/80e

a) Central Heating

The lower control knob enables you to control the temperature of the central heating flow as it leaves the appliance. This knob can be set between the - and + setting. The graduations correspond approximately to a temperature of 60 ℃ to 79 ℃. Under a minimum load condition the flow temperature can rise to 87 ℃ at maximum setting. The appliance is fitted with a Central Heating switch which will allow you to switch Off the central heating during the summer months (mid position).

b) Hot Water

The upper control knob enables you to control the temperature of the domestic hot water as it leaves the appliance. The knob can be set between the - and + setting. The graduations - to + correspond approximately to a temperature of 45 ℃ to 65 ℃.

3.9 Appliance Protection Devices

Loss of gas supply, flame failure, or over-heating of the central heating water will cause the appliance to shut down or Lockout.

On the 80 model (with permanent pilot) this will be indicated by the pilot being extinguished. To restart the appliance follow the lighting instructions on the boiler facia label or as shown in Section 3.3.

On the 80e/Saver models (electronic) this will be indicated by the lockout light being illuminated. To Reset the appliance press the RESET button on the front panel and hold in that position for 10 seconds and release. The appliance should now operate normally.

If this is not the case refer to the Fault Finding guide either on the rear of the white front case or pages 39 & 48 of these instructions.

80 & 80e. If the central heating system looses pressure for any reason the appliance will cease to function and the Low System Pressure light will illuminate. The system and the appliance should be checked for leaks (including discharge from the pressure relief pipe). Correct any faults and re-pressurise the system with reference to Section 1.6. Mains Water Feed Central Heating.

All models are fitted with a Frost thermostat which will bring the appliance On when the local temperature around the appliance falls below 5 ℃ The appliance will shut down when the temperature of the system water has been raised by approximately 10 ℃

The appliance is protected provided the Mains light is illuminated and the Boiler switch is set to On (and on permanent pilot models the pilot is alight), irrespective of the settings of any external controls.

Note: the Frost thermostat will operate with the central heating switch in any position therefore when leaving the property in cold weather for extended periods, the boiler will be protected even when the switch is set to Off (Mid position).

Note: While the appliance is being used to provide hot water at any draw off point, the central heating will not operate. When hot water is no longer required the appliance will automatically revert to central heating.

3.10 Refit the White Front Case.

3.11 Handing Over to the User

After completion of installation and commissioning of the system, the installer should hand over to the Householder by the following actions:

a) Explain to the Householder where to find the User's Guide and his/her responsibilities under the 'Gas Safety (Installation and Use) Regulations 1994. (As Amended)'.

b) Explain and demonstrate the lighting and shutting down procedures.

c) Demonstrate the operation of the boiler including the use and adjustment of all system controls. This then ensures the greatest possible fuel economy consistent with household requirements of both heating and hot water consumption. Advise the User of the precautions necessary to prevent damage to the system, and to the building, in the event of the system remaining inoperative during frost conditions.

d) Explain the function and the use of the boiler switch, central heating switch and Reset button ('e' models only).

e) Explain and demonstrate the function of time and temperature controls, external frost thermostat (if fitted) and radiator valves, etc. for the economic use of the system.

f) If a Time Control is fitted (internal or external), then draw attention to the timer 'User Instructions' and hand them to the householder.

g) Stress the importance of regular servicing by a qualified Heating Engineer and that a comprehensive service should be carried out AT LEAST ONCE A YEAR.

h) Explain the function of the Low System Pressure indicator light.

i) An internal frost thermostat is fitted to the appliance, it must be explained that the Boiler switch must be in the On position (with the mains light illuminated) to provide protection of the appliance, if it is not to be used during winter periods.

Note: the Frost thermostat will operate with the central heating switch in any position therefore when leaving the property in cold weather for extended periods, the boiler will be protected even when the switch is set to Off (Mid position).

4. Servicing - Page 25

To ensure the continued safe and efficient operation of the appliance it is recommended that it is checked and serviced as necessary at regular intervals.

The frequency of servicing will depend upon the particular installation conditions and usage but in general, once per year should be adequate. It is the law that all servicing work is carried out by competent person such as British Gas or other CORGI registered personnel.

WARNING: Before the start of any maintenance work, disconnect the mains electricity supply to the appliance by removing the plug from the socket or by switching off at the external isolating switch. The gas distribution pipework and all associated appliances (including the boiler) must be checked for gas soundness. The appliance gas supply should be isolated at the gas service cock, (one quarter turn of square spindle) if dismantling gas carrying components.

The following notes apply to the appliance but it should be remembered that attention must also be paid to the heating and hot water systems in the property with special attention to radiator valves, thermostats, clocks, leaking hot water taps etc.

Where it is necessary to replace a gasket that relies on adhesive for securing - this adhesive will be supplied with the gasket in the spares kit.

Prior to servicing, Remove the white front case (see 5.1 in `Routine Maintenance'). Operate the appliance by turning On a hot water tap to a high water flow and observe the main burner.

Look through the sight glass and check that the flame covers all the flame ports and is of a light blue colour. Yellow flames and excessive lifting of flames indicate poor combustion.

Inspect the pilot flame for size and colour. The pilot burner pressure is non-adjustable. The pilot flame should heat the thermocouple so that the pilot safety device is "held in" but must not cause the thermocouple to glow red. Figure 23 illustrates the approximate size of the correct flame. If there is excessive flame replace the pilot injector.

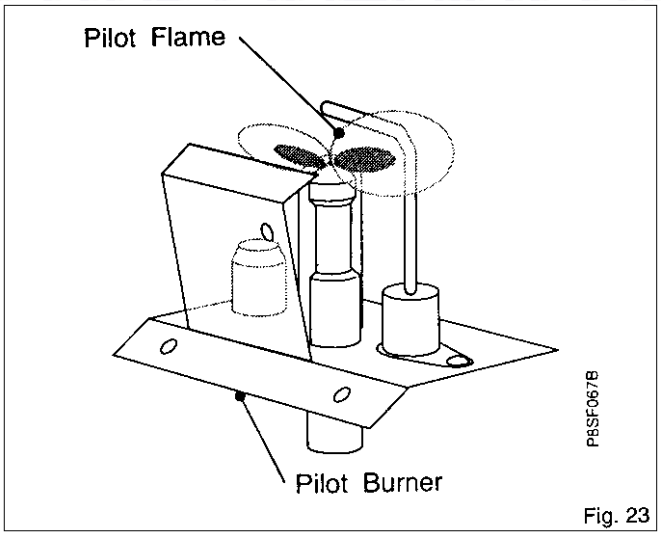

Fig. 23

It is preferable to measure the CO% and CO2% content of the flue products. This is achieved by placing a suitable sampling probe into the fluehood via the sample test point on the air box door.
Typical figures based on a 500mm flue length with the boiler operating at maximum output are:-

CO	0.002 - 0.005%
CO_2	4.5 - 5.0 %

IMPORTANT: After completing any servicing or replacement of a gas carrying component, it is essential that a test for gas soundness is made and functional checks of controls operation carried out.

Routine Maintenance (Carry out the following sequence 5.1 - 5.10)

5.1 Remove the White Front Case

(Fig. 15 in the Boiler Installation Section).

a. Remove the two securing screws located at the base of the white front case assembly.
b. Ease the base of the case forward approximately 50mm and lift to release the panel from the securing hooks at the top of the appliance.
c. Remove the case and place in a safe position away from the immediate working area.

5.2 Remove Base Panel

a. Remove the two securing screws retaining the base panel to the case sides.
b. Lower the front edge and push backwards to release cover

5.3 Remove the Air Box Covers

a. Take out the six securing screws and remove the main air box cover.
b. Remove the two screws securing the front edge of each white case side panels. This will allow the side panels to be sprung outwards to improve access for the following operation.
c. Remove the four screws securing the two remaining air box side covers and remove.

5.4 Remove the Fan Assembly

a. Disconnect the fan wiring by separating the in-line connector.
b. Support the fan and remove the two fixing screws from the front edge of the fan mounting plate. Lower the fan and carefully withdraw it from the appliance. Put in a safe place until required.

5.5 Remove the Flue Hood

a. Remove the two flexible tubes connected to the left and right hand sides of the fluehood.
b. Slacken the screw on the left-hand rear of the flue hood (but do not remove) and fully remove the remaining right hand screw.
c. Lift and remove the fluehood to expose the top surface of the heat exchanger.

5.6 Remove the Combustion Chamber Front Panel

a. Remove the two screws securing the combustion chamber front panel.
b. Remove the panel by pulling the top edge forwards and lifting the panel clear of the two lower retaining flanges. Ensure the insulation remains in position. The underside of the heat exchanger is now exposed.

5.7 To Inspect and Clean the Boiler

(Fig. 24)

a. Inspect the heat exchanger for any blockage. Deposits of any material should be brushed away using a soft brush.
Note: Do not use brushes with metallic bristles.
b. Examine internal pipe work connections and automatic air vent for any water leaks. Rectify if necessary.
c. Examine the combustion chamber insulating material and renew if damaged. To remove the combustion chamber side panels undo the single screw from each side and pull panel forward. The insulation can now be removed from the panel. To remove the insulation from the rear of the combustion chamber remove the two hexagonal burner location supports and take out the two screws from the insulation support bracket.
Remove the support and slide the insulation downwards from behind the heat exchanger.

Permanent pilot versions only.
Inspect the pilot injector for any obstruction and clear or renew as necessary.

d. Inspect the main burner and remove any deposits with a soft brush.

Electronic & Saver.
Check the electrodes for damage or deterioration. Ensure that the spark gaps are correct to dimensions specified in Fig. 24. Clean or renew as necessary. Do not bend the electrodes as the insulating material may crack.

e. Examine the fan for any mechanical damage (including seals), check to ensure free running of the fan wheel. Clean the wheel if necessary with a soft brush.

Note: It is essential that a good seal is made at the fan, renew the sealing collar or fluehood sealing ring if there are any signs of damage or deterioration. See section 6.17 of Component Replacement.

f. Examine flue ducts and flue hood and ensure that there is no obstruction. Re-assemble all components in reverse order, (ensure all seals are replaced correctly). See note above re-spare main burner seals.

Permanent pilot versions only.
During re-assembly of the pilot injector, pilot tube thermocouple and spark electrode lead ensure all components are clean and all joints are tight.

All Types
During re-assembly check the air box door and side cover seals for damage or deterioration and renew if necessary.

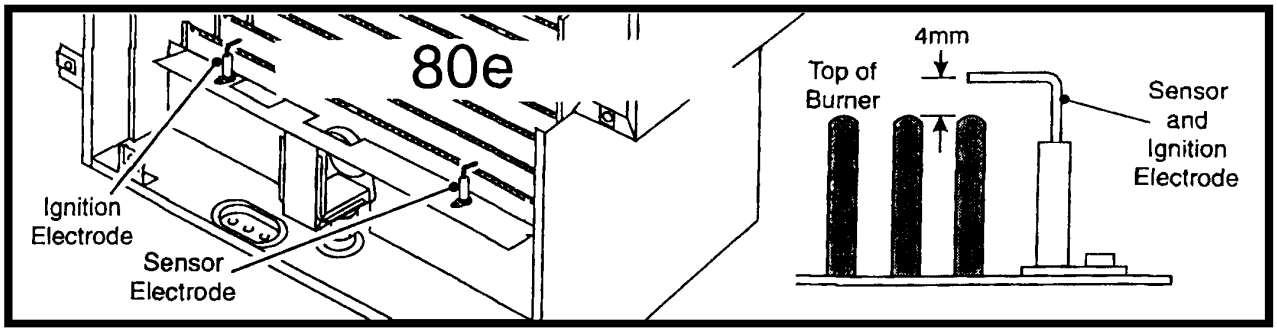
80e
Ignition Electrode
Sensor Electrode
4mm
Top of Burner
Sensor and Ignition Electrode

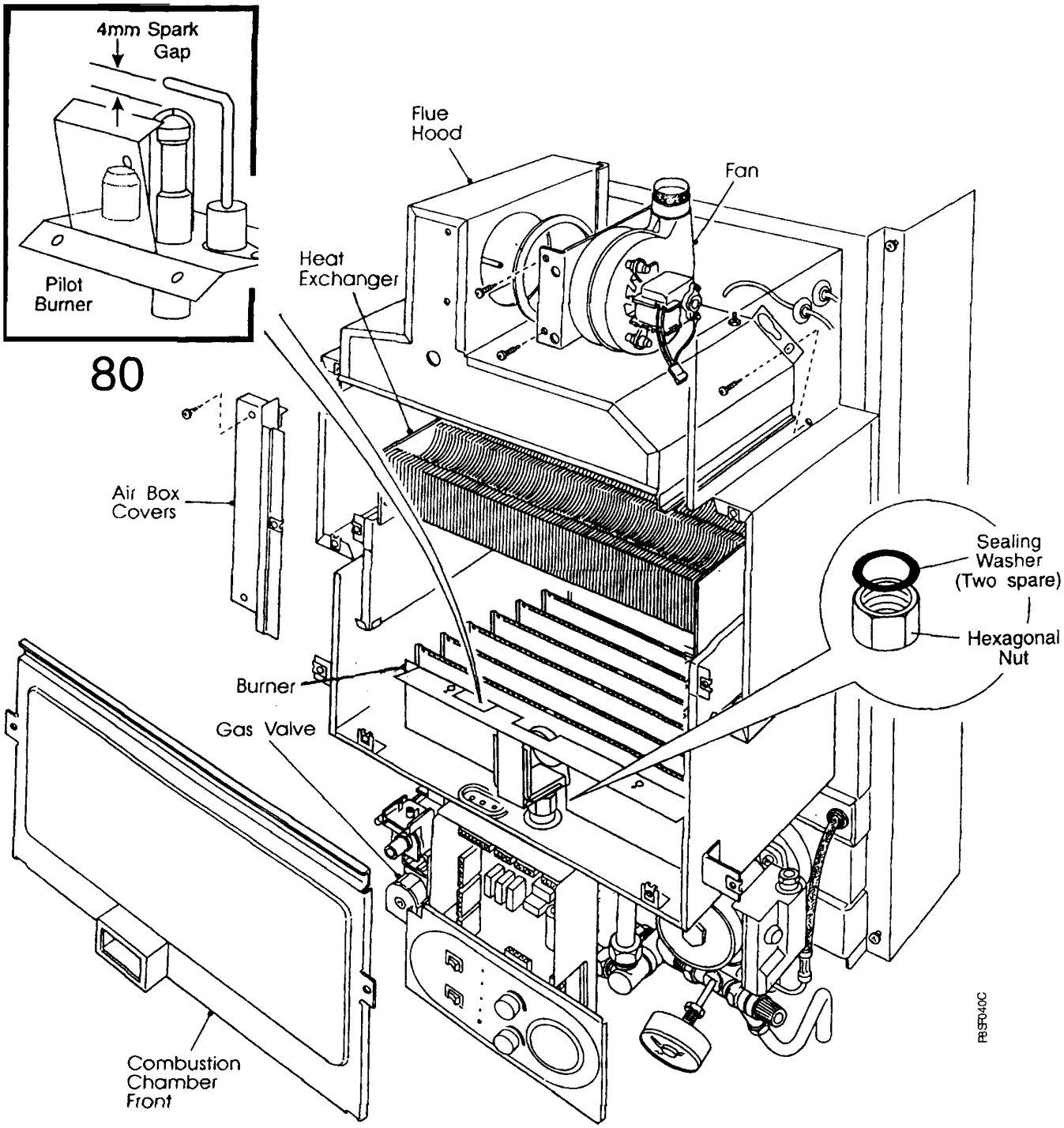
4mm Spark Gap
Pilot Burner
80
Flue Hood
Fan
Heat Exchanger
Air Box Covers
Sealing Washer (Two spare)
Hexagonal Nut
Burner
Gas Valve
Combustion Chamber Front
FBSP040C

5.8 Remove the Burner
(Fig. 25)

Electronic & Saver versions

a. Disconnect the two leads to the electrodes. (Do not pull on the cable).

Permanent Pilot versions

a. Disconnect the pilot tube, thermocouple and spark electrode lead and pull all three away from the pilot burner. **Note:** The pilot injector will be loose. Do not remove the two screws holding the pilot burner to the main burner.

All types

b. Undo the hexagonal union nut under the burner, taking care not to loose the seal *. Carefully pull the burner forward approximately 3 mm to disengage the rear burner supports, then lift the rear of the burner to an angle greater than 45°. Continue to roll the burner out of the appliance.

c. Remove the burner injectors separately to examine their status, clean or renew as necessary.

* If, during removal of the burner the burner sealing washer becomes damaged, the appliance is supplied as standard with two spare sealing washers. They are in a polythene bag located on the inside face of the base panel. Further washers can be purchased from Potterton, Part No.13-18693. If the boiler has been operating, care must be taken to avoid contact with any hot pipework on the underside of the appliance, during inspection and cleaning.

5.9 Gas Pressures - Adjustment
See Section 3.4. Page 21.

5.10 The Central Heating Sealed System

Check that the pressure in the system is being maintained. The pressure gauge is fitted with a moveable red marker which indicates the initial filling pressure of the system when cold. If the pressure gauge needle indicates a lower pressure than the red marker (or the Low System Pressure light is illuminated - 80/80e only), the system has lost pressure and should be re-pressurised. The correct procedures are shown in the installations section. See `permissible methods of filling' Page 12.

5.11 Other Components

No further servicing is required on any other appliance components. It is advisable to operate the three water isolating taps to maintain free operation. It is recommended that the pressure relief valve is operated during servicing. It may occasionally be necessary to replenish the pre-charge in the expansion vessels. This can be readily achieved by use of a portable air pump.

Note: The water side of either expansion vessel must be depressurised prior to re-pressurising the air side.
Access can be made to the charging points on the respective vessels, as follows:

a. Central Heating expansion vessel - access is made to the vessel charging point from above on the right hand side of the appliance. Re-pressurise to a minimum of 1 bar (14.5 lb/in) or marginally greater than the designed system pressure at the appliance when cold, which ever is higher.

b. Domestic Hot Water expansion vessel - access is made by lowering the controls panel and removing the access cover on the rear panel, also temporarily remove the transformer - See 6.31. The vessel charge point can now be connected. Re-pressurise the vessel to 3.5 bar (51 p.s.i) or higher if mains water pressure is higher.

Note: If the portable pump can not easily be connected, the vessel can be removed and re-pressurised off the appliance. (see section 6.25, Expansion vessel D.H.W.).

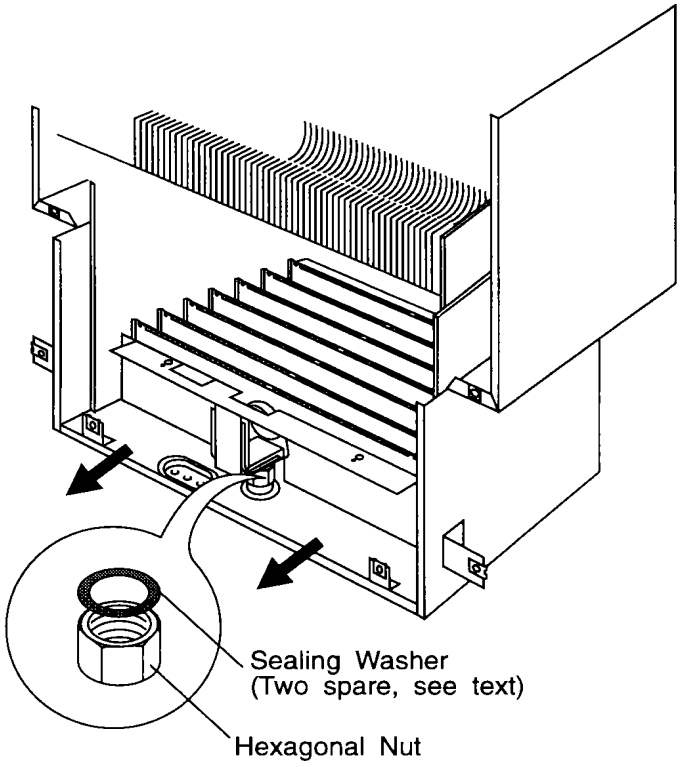
Sealing Washer
(Two spare, see text)
Hexagonal Nut

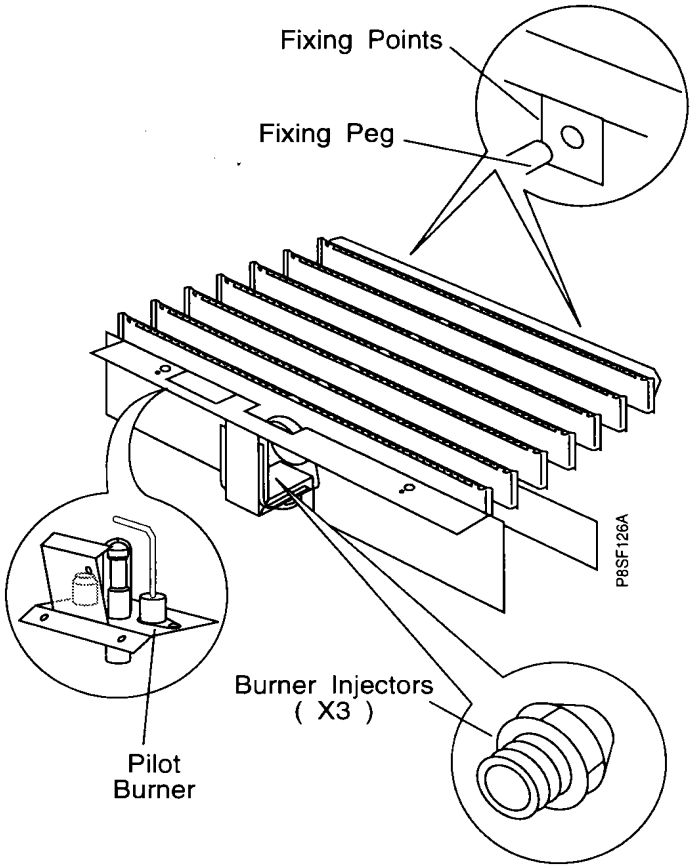
Fixing Points
Fixing Peg
P8SF126A
Burner Injectors
(X3)
Pilot
Burner

6. Component Replacement - Page 30

WARNING: Before attempting to remove any component from this appliance, first disconnect the mains electricity supply by removing the plug from the wall socket or by switching off the appliance at the external isolating switch. **Note:** The appliance stand-by switch must not be used as the means of isolating, as this switch does leave parts of the appliance electrically live.

IMPORTANT: After removal or replacement of any gas carrying components a test for gas soundness must be made.

Notes: The appliance gas supply should be isolated at the boiler gas service cock (one quarter turn of square spindle).

The Central Heating and Domestic Hot Water circuits can similarly be isolated at their respective valves. A drain point is provided in the appliance heating circuit under the pump manifold and the cold water inlet isolating valve also incorporates a drain screw. Use a suitable tube when draining to direct water away from the appliance.

When removing any water carrying components suitably protect the control box from accidental spillage.

Before removing any component from the central heating circuit on the appliance, reduce the pressure by closing the isolating valves and opening the pressure relief valve.

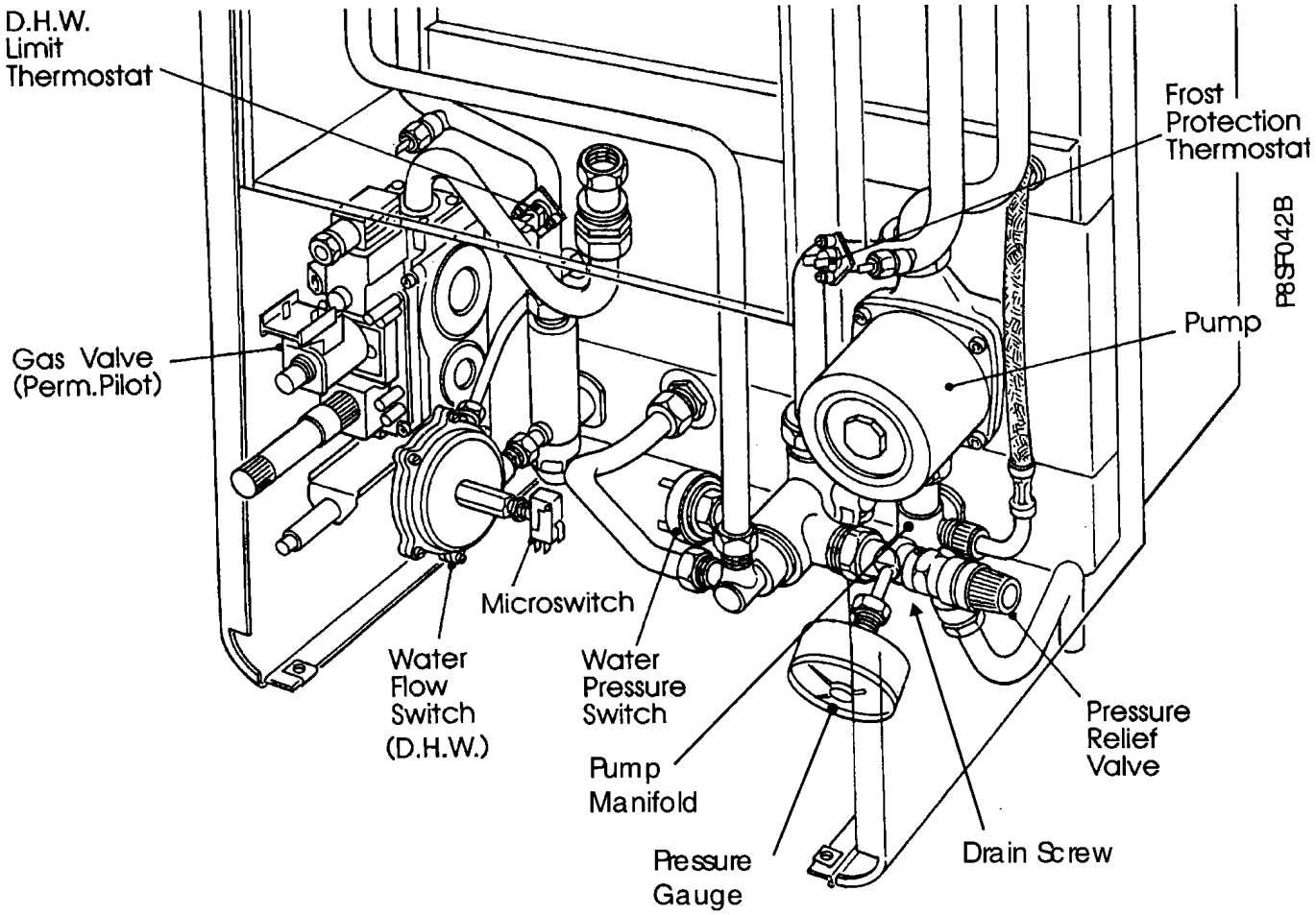

6.1 Central Heating Overheat Thermostat

Fig. 27

a. Remove the white front case and three air box covers. See 5.1 & 5.3 in 'Routine Maintenance'.
b. The thermostat is located on the outlet tail on the right hand side of the heat exchanger. Disconnect the two electrical leads.
c. Undo the two long fixing nuts and remove the thermostat from the heat exchanger.
d. Fit the new overheat thermostat taking care not to touch the exposed disc on the thermostat face. **Do Not use heat sink compound**. Re-assemble in reverse order.

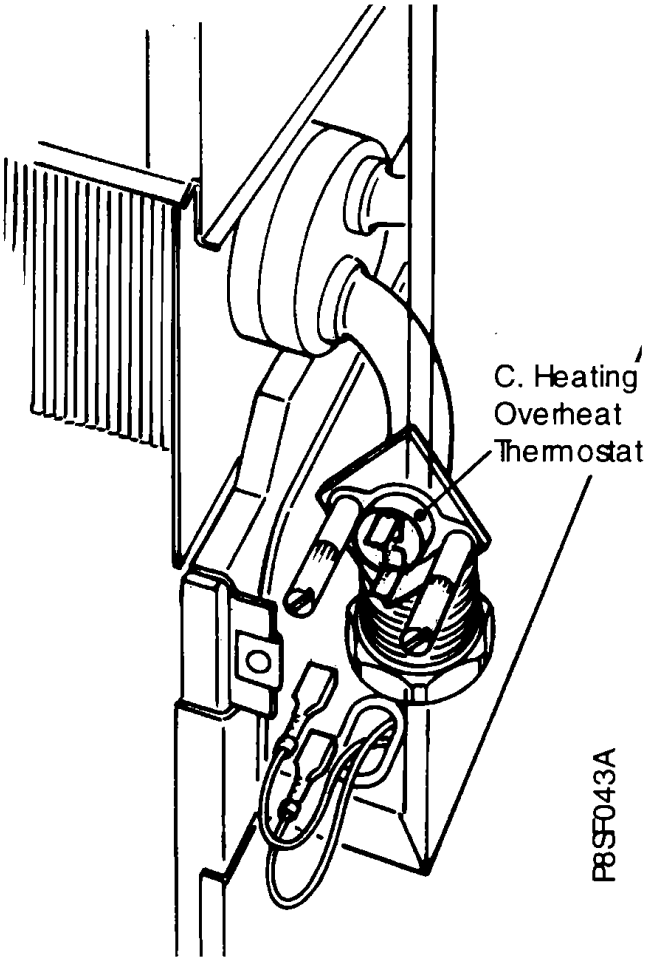

Fig 27

6.2 Domestic Hot Water Limit & Frost Thermostats

a. Remove the white front case and base panel. See 5.1 to 5.3 in 'Routine Maintenance'. Lower the control panel, (one screw).
b. Disconnect the electrical leads from the thermostat.
c. Remove the two securing screws and pull the thermostat clear of the pipe.
d. Fit the new thermostat and re-assemble in reverse order.

6.3 Sensor and Ignition Electrode

(Electronic & Saver versions only)

a. Remove the white front case, base panel, air box covers and combustion chamber front panel. See 5.1 & 5.3 & 5.6 in 'Routine Maintenance'.
b. Disconnect the lead from the base of the electrode to be changed.
   Remove the electrode retaining screw and remove the electrode from the burner.
c. Fit new electrode and re-assemble in reverse order, checking the gap measures 4mm ± 0.5mm (Fig. 24).

6.4 Sensor and Ignition Leads

(Electronic & Saver versions only)

a. Remove the white front case, base panel and main air box cover. See 5.1 to 5.3 in 'Routine Maintenance'.
b. Lower control panel (one screw)
c. Note run of lead.
   Remove lead ends from electrode and Full Sequence Control Board. Pass lead through the silicone grommet.
d. Fit new lead in correct position.
e. Re-assemble in reverse order. Ensure the silicone grommet is correctly fitted and not damaged. Replace if necessary.

6.5 Spark Ignition Lead

(Permanent Pilot versions only)

a. Remove the white front case, base panel and main air box cover. See 5.1 to 5.3 in 'Routine Maintenance'.
b. Lower control panel (one screw)
c. Note run of lead.
   Remove lead ends from electrode and ignitor button. Pass lead through the silicone grommet.
d. Fit new lead in correct position.
e. Re-assemble in reverse order. Ensure the silicone grommet is correctly fitted and not damaged. Replace if necessary.

6.6 Thermocouple

(Permanent Pilot versions only)

a. Remove the white front case, base panel and main air box cover. See 5.1 to 5.3 in 'Routine Maintenance'.
b. Lower control panel (one screw)
c. Loosen the nuts at both ends of the thermocouple and partly withdraw each connection.
d. Cut through the defective thermocouple where it passes through the silicone grommet and remove both halves from the boiler.
e. Fit a new thermocouple retaining nut to the pilot.
f. Carefully feed the new thermocouple through the silicone grommet and push fully into the retaining nut until it hits its stop. Tighten thermocouple nut.
g. Position thermocouple along route, avoid sharp bends which may kink copper sleeve. Connect to gas valve.
h. Re-assemble in reverse order. Ensure the silicone grommet is correctly fitted and not damaged. Replace if necessary.

6.7 Burner
(Fig. 25)

a. Remove the white front case, air box covers, combustion chamber, front panel and burner assembly. See 5.1, 5.3, 5.6 & 5.8 in 'Routine Maintenance'.
b. Remove the electrodes or pilot burner from the main burner and re-assemble onto the new main burner. (On electronic only, check electrode gap is 4mm ± 0.5 Fig. 24).
c. Re-assemble in reverse order.

6.8 Injectors
(Fig. 25)

a. Remove the white front case, air box covers, combustion chamber front panel and burner assembly. See 5.1, 5.3, 5.6 & 5.8 in 'Routine Maintenance'.
b. With the main burner removed, release the burner manifold by removing the 4 screws to give access to the injectors.
c. Replace the relevant injector/s ensuring that the brass washer is fitted under each injector.
d. Re-assemble in reverse order.

6.9 Gas Valve
(Fig. 28)

a. Remove the white front case, base panel & white left hand side panel.
See 5.1, 5.2 & 5.3 in 'Routine Maintenance'.
b. Isolate the gas supply at the gas cock (1/4 turn).
c. On either valve remove the electrical connectors from the modulating valve, the plug from the first solenoid valve (Electronic & Saver only) and gas valve compensation tube. On the permanent pilot version remove the connections on the interrupter, spark igniter and thermocouple. Disconnect the pilot tube.
d. Undo the nut on the lower gas supply tube.
e. Support the gas valve assembly and undo the nut on the burner supply pipe under the air box. Remove the gas valve assembly from the appliance.
f. Remove the second solenoid valve (2 screws).
g. Remove the screw and disconnect the electrical connector to the second solenoid valve and remove the rubber gasket.
h. Before the new gas control valve is fitted, fit the rubber gasket to the second solenoid valve and secure the electrical connector to the second solenoid valve (1 screw), transfer the burner feed pipe and lower gas supply tube to the new valve. Replace the 'O' rings if necessary. On Permanent pilot versions refit the interrupter and the valve knob extension.
i. Re-assemble in reverse order ensuring that the black and red wires (low voltage) are connected to the modulator valve (Fig. 28 or 29) Polarity is not important.

6.10 Modulating Valve

a. Remove the white front case.
See 5.1 in 'Routine Maintenance'.
b. Disconnect the electrical connections to the modulating valve. (Red and Black).
c. Remove the clear plastic cover by cutting off the nylon tie, twisting the cover anti-clockwise 90° and levering off with a small screwdriver.
d. Using a 14mm spanner unscrew the complete inner cartridge and remove with niting plate.
e. Lift off the solenoid coil and remove from metal bracket,
f. Replace in reverse order ensuring the notch in the niting plate is located over the raised pip on the new solenoid coil.
g. Reconnect the red and black wires to the terminations on the modulation coil. Polarity is not important.
h. Reset the gas pressure - see 3.4 'Commissioning', Page 21.
i. Refit the clear plastic cover, snap into place and turn.

6.11 First Solenoid Valve Coil
(Fig. 29)

(Electronic versions only)

a. Remove the white front case.
See 5.1 in 'Routine Maintenance'.
b. Disconnect the electrical connecter to the first solenoid valve.
c. Remove the first solenoid valve (2 screws).
d. Replace the solenoid valve in reverse order.
e. Re-commission the appliance as described in section 3.

6.12 Second Solenoid Valve

(All versions)

a. Remove the white front case.
See 5.1 in 'Routine Maintenance'.
b. Remove the second solenoid valve (2 screws).
c. Remove the screw and disconnect the electrical connecter to the second solenoid valve.
d. Transfer the rubber gasket to the new solenoid valve.
e. Replace the solenoid valve in reverse order.
f. Re-commission the appliance as described in section 3.

6.13 Case Seals

a. Remove the white front case, base cover and air box covers.
See 5.1, 5.2 & 5.3 in 'Routine Maintenance'.
b. Peel off the existing case seal(s).
c. Fit new seal(s) and re-assemble, in reverse order.

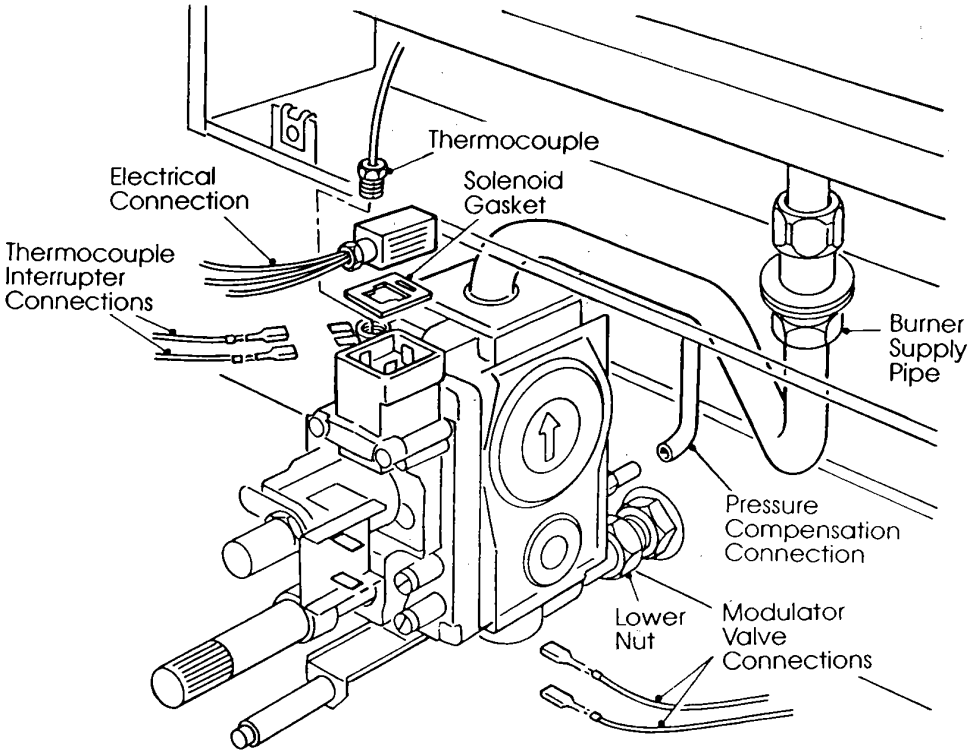

Remove Gas Valve (80)

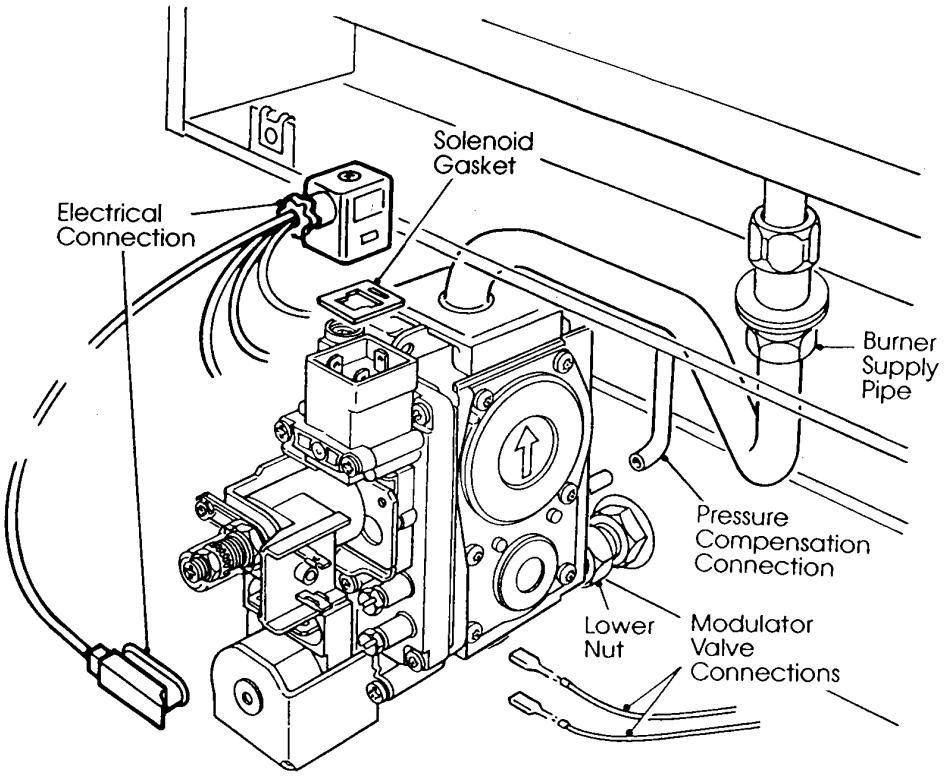

Remove Gas Valve (80e & 80se)

P8SF044A

Fig. 28

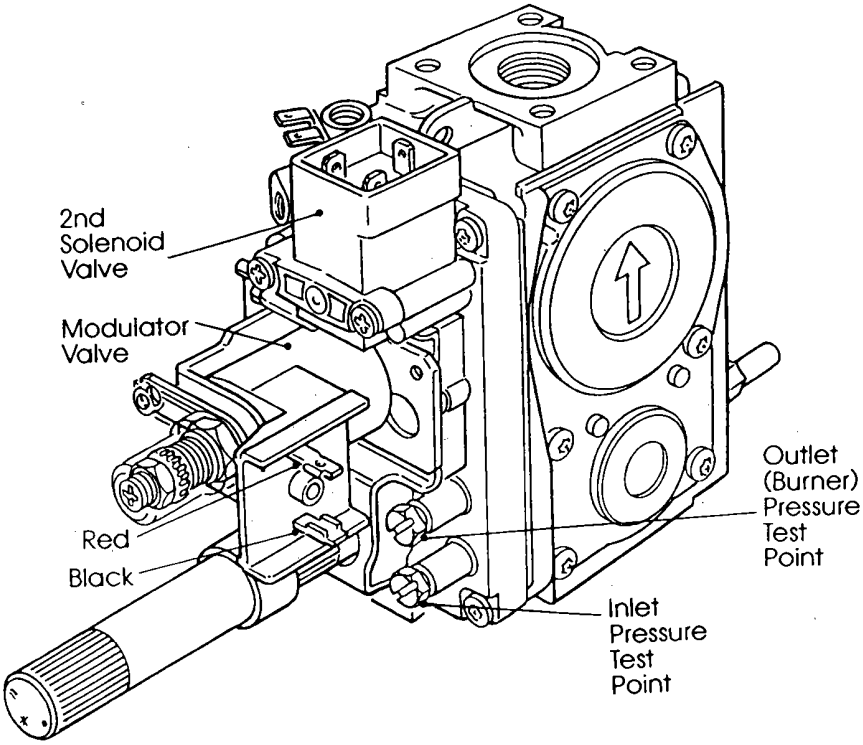

Gas Valve (80)

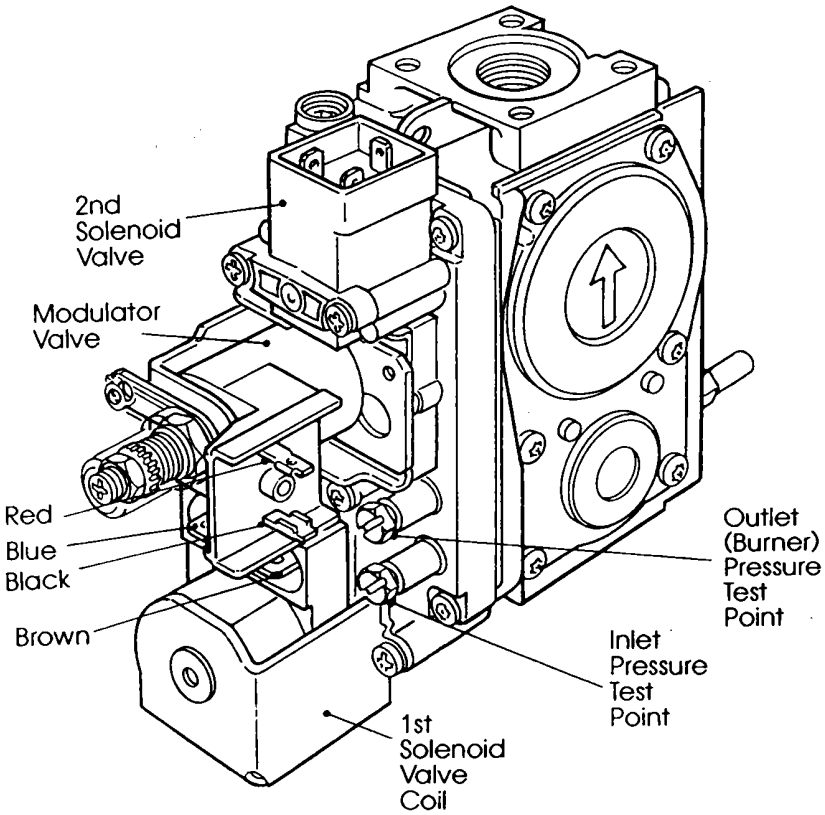

P8SF045A

Gas Valve (80e & 80se)

Fig. 29

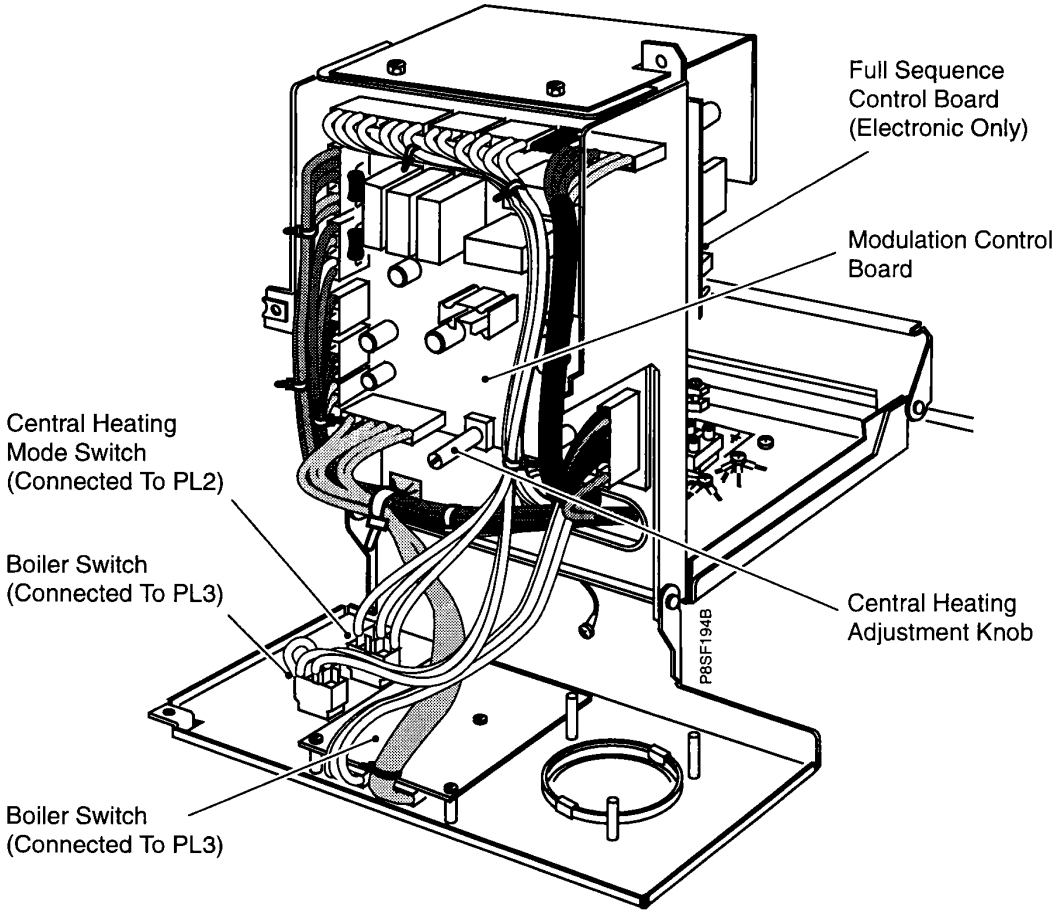

Fig 30

6.14 Central Heating and Boiler Switches

a. Remove the white front case and base panel. See 5.1 & 5.2 in 'Routine Maintenance'. Lower the facia panel, (1 screw).
b. Make note of the wire routing and switch orientation and disconnect the molex plug from the electronic control board.
c. Using a small screwdriver press the retaining lugs on the switch body sides inwards and remove the switch from the control panel. Withdraw the switch and leads and feed the molex plug through the cut out in the panel
d. Fit new switch assembly and re-assemble in reverse order. Ensure that the switch is the correct way round in the panel i.e. when the Stand-by/On switch is On, the red indicator line on the switch can be seen.
e. Re-fit the molex plug to the correct plug position on the electronic control board.

6.15 Electronic & Saver Control Boards

(Fig. 30)

The electronic control assembly is in three parts:
i. The User Display Board.
ii. The Control Board.
iii. The Full Sequence Control Board, (not fitted to permanent pilot version).
a. Remove the white front case and base panel. See 5.1 & 5.2 in 'Routine Maintenance'.

(i) USER DISPLAY BOARD
a. Remove the thermostat knobs (80 & 80e only) and reset button.
b. Undo the fixing screw retaining the facia panel and swing the panel downwards.
c. Remove the plug connector/s from the rear of the board and undo the four securing screws.
d. Replace board and re-assemble in reverse order.

(ii) MODULATION CONTROL BOARD
Note: The board has a replaceable fuse rated at 2A.
a. Undo the fixing screw retaining the facia panel and swing the panel downwards.
b. Remove the plug connectors on the larger control board and undo the four securing screws.
c. Replace the board and re-assemble in reverse order.

(iii) FULL SEQUENCE CONTROL BOARD
(not on permanent pilot versions)
a. Undo the fixing screw retaining the control panel assembly (top right hand side of control box) and swing the control assembly downwards.
b. Remove the cover over the full sequence control (two screws).
c. Slide the electrode and flame sensors wire connections out of their respective slots on the board. Disconnect all plug connections and carefully remove the earth tab.
d. At each of the four standoff pillars, push the small barb inwards and lift the board free.
e. Replace the board and re-assemble in reverse order.

6.16 Air Pressure Switch
(Fig. 20 & 31)

a. Remove the white front case, base panel and white right hand side panel. See 5.1, 5.2 & 5.3 in 'Routine Maintenance'.
b. From the top right hand side of the boiler undo the securing screw retaining the pressure switch /bracket assembly
c. Lift the pressure switch / bracket assembly clear of the top of the boiler. Note positions and disconnect pressure tubes and electrical connectors.
d. Replace pressure switch and re-assemble in reverse order.

Note: The Red pressure tube must be connected to the High side of the switch, indicated by (H) and a Red Paint Spot. The electrical connections must be as follows.-

Orange	Common	(C)
Violet	Normally Closed	(NC)
Grey	Normally Open	(NO)

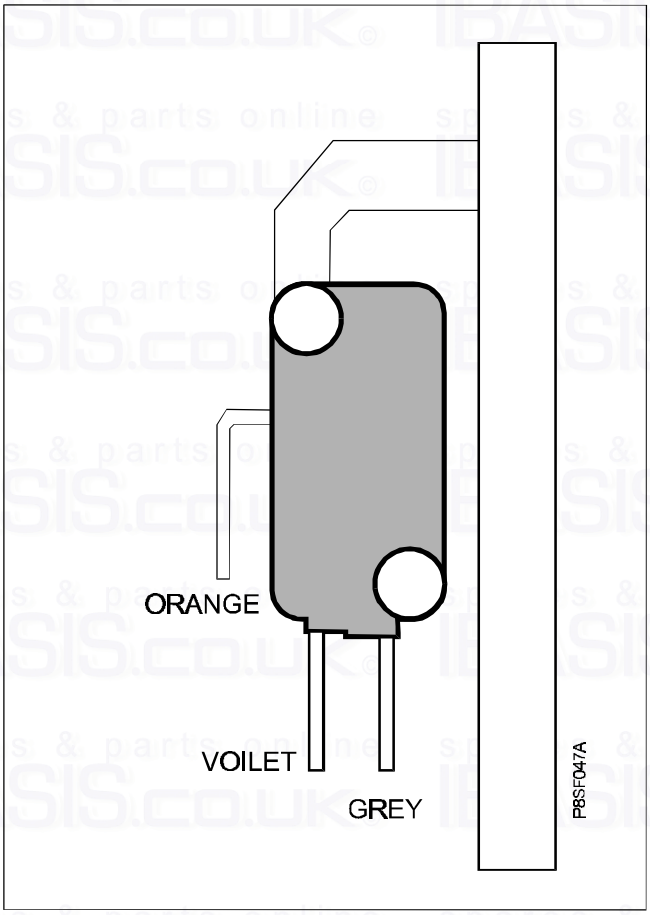

6.17 Fan

a. Remove the fan. See 5.1, 5.2, 5.3 & 5.4 in 'Routine Maintenance'.
b. Transfer the fan outlet seal to the new fan and fit the fan into the appliance. Ensure a good seal is made between the fan inlet and the fluehood.
c. Re-assemble in reverse order. Ensure the seal is not trapped on the turned down edge.

6.18 Fan Seals

a. Remove the fan. See 5.1, 5.2, 5.3 & 5.4 in 'Routine Maintenance'.
b. Remove the fan outlet seal by sliding the seal off the fan. Remove the fan inlet seal by pulling the seal away from the fluehood and disconnecting the pop in locaters.
c. Fix the new seals in position.
d. Re-assemble in reverse order. Ensure the seal is not trapped on the turned down edge.

6.19 Temperature Sensor D.H.W. & C.H.
(Fig. 20)

a. Remove the white front case and base panel. See 5.1 & 5.2 in 'Routine Maintenance'.
b. For D.H.W sensor lower the control panel assembly by undoing the securing screw at the top right hand side of the control panel.
c. Before removing the hot water or central heating sensor, first close the isolating valves for the circuit involved and drain the appliance.

   For C.H, with both 22mm isolating valves closed, reduce the system pressure by opening the pressure relief valve and drain the water from the heating circuit by removing the drain plug from the underside of the pump manifold.

   For D.H.W, close the 15mm cold water isolating valve, open the lowest hot water tap, then remove the D.H.W drain screw on the isolation valve to fully drain the appliance (Fig. 16).

d. Disconnect the electrical connection from the sensor(s) and unscrew from its housing.
e. Refit the new sensor(s) and 'O' Ring seal if required. Re-assemble in reverse order. If necessary (C.H. sensor only) re-charge the central heating system as described in section 1.6 and check for leaks.

6.20 Pressure Gauge
(Fig. 20)

a. Remove the white front case and base panel. See 5.1 & 5.2 in 'Routine Maintenance'.
b. Close the central heating isolating valves, reduce the system pressure by opening the pressure relief valve, then drain the water from the appliance by removing the drain plug located under the pump manifold.
c. Use a spanner to prevent the pressure gauge from rotating and undo the 1/4" BSP nut behind the pressure gauge and remove the gauge.
d. Fit the new pressure gauge, in its correct position. Re-assemble in reverse order. Use the new washer to seal. Re-charge the central heating system as described in section 1.6 and check for leaks.

6.21 Water Flow Switch (D.H.W.)

a. Remove the white front case and base panel. See 5.1 & 5.2 in 'Routine Maintenance'.
b. Lower the control panel assembly by undoing the securing screw at the top right hand side of the control panel.
c. Close the 15mm cold water isolating valve, open the lowest hot water tap then remove the drain screw from the isolating valve to drain the system.
d. Note the position of the electrical connections and remove the two wires from the micro switch.
e. Undo the two nuts holding the flow switch in place and remove the pressure switch.
f. Transfer the micro switch assembly by loosening the locknut and unscrew the switch, refit the micro switch to the new flow switch and position the switch as dimensioned in Fig. 32.
g. Re-assemble in reverse order. Ensure the wires are connected correctly as shown in Fig. 32.

6.22 Microswitch (D.H.W FLOW SWITCH)

a. Remove the white front case and base panel. See 5.1 & 5.2 in 'Routine Maintenance'.
b. Lower the control panel assembly by undoing the securing screw at the top right hand of the control panel.
c. Note the position of the electrical connections and remove the two wires from the micro switch.
d. Loosen the locknut and remove the switch, fit the new micro switch (with locknut) to the flow switch and position the switch as dimensioned in Fig. 32.
e. Re-assemble in reverse order. Ensure the wires are connected correctly as shown in Fig. 32.

6.23 Pump

(Fig. 26)

For ease of replacement it is advisable to fit a new motor (head) assembly to the existing pump housing. This will prevent excess dismantling and save time as the motor assembly may well need to be removed from the new pump to correctly position the electrical control box.

a. Remove the white front case and base panel. See 5.1 & 5.2 in 'Routine Maintenance'.
b. Lower the control panel assembly by undoing the securing screw at the top right hand side of the control panel.
c. Unplug the pump wiring at the in-line connector.
d. Close the two central heating isolating valves, reduce the system pressure by opening the pressure relief valve, and drain the water from the central heating system by removing the drain plug on the underside of the pump manifold.
e. Remove the motor head assembly from the pump body by removing the four retaining screws.
f. Transfer the wiring harness from the old pump to the new, note the following wiring terminations.

Live (L)	Pink
Neutral (N)	White
Earth	Green/Yellow

g. Fit the new pump head assembly using the new sealing ring, ensure that the pump terminal block is to the right hand side with the wires running out of the top. Secure tightly and re-assemble in reverse order. Re-charge the system as described in section 1.6 and check for leaks. When applicable, ensure that the pump is set to the highest speed.

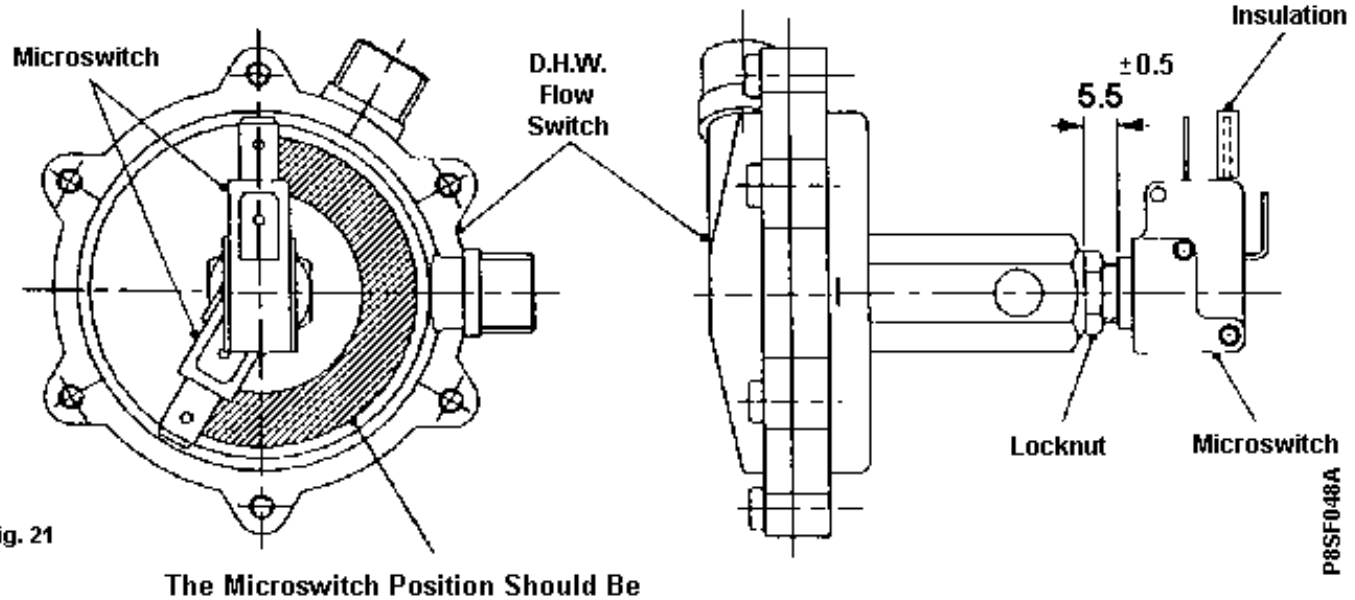

Fig. 21

The Microswitch Position Should Be Limited To The Shaded Area, (When Adjusting To Obtain The 5.5mm Gap).

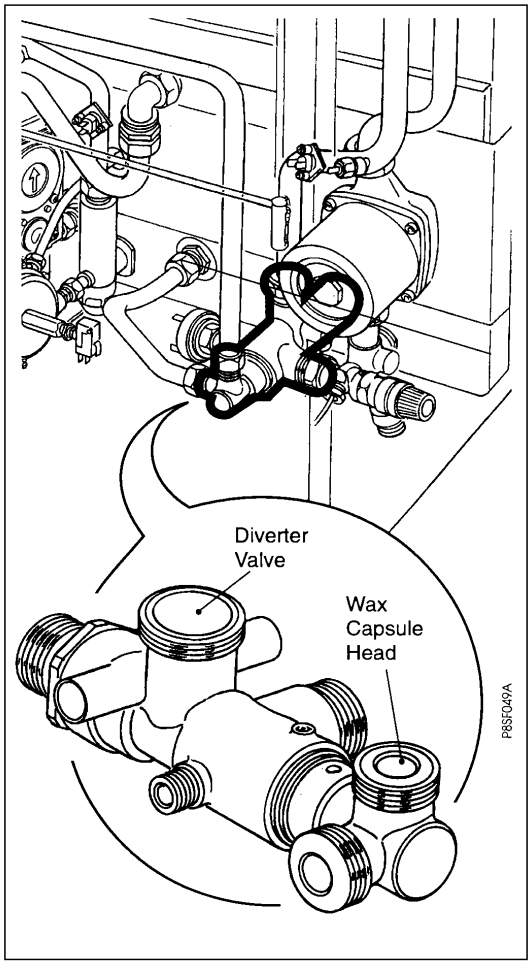

Fig 33

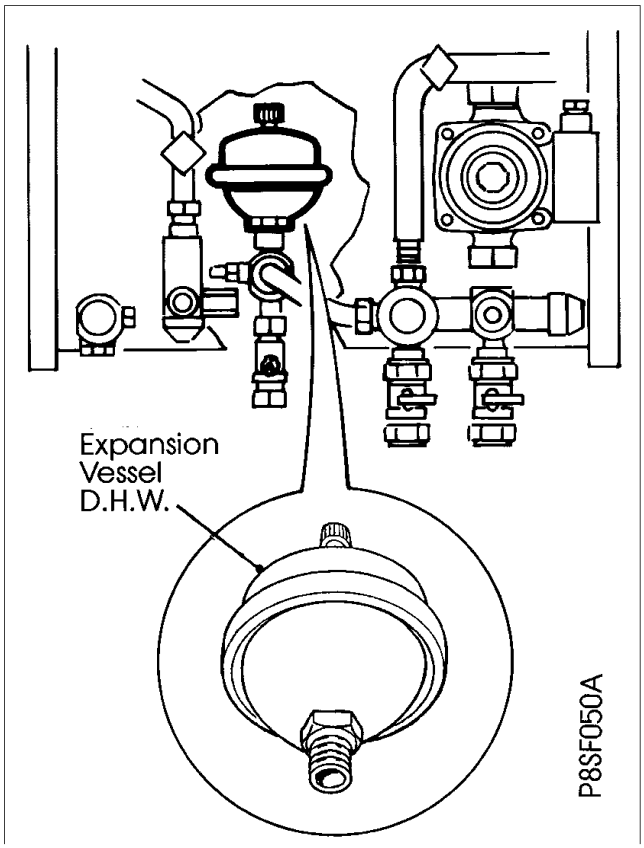

Fig 34

6.24 Diverter Valve

(Fig. 33)

The diverter valve is made up in two parts. The wax capsule head forms one part and provides the motive power to open the valve. The second part, the valve consists of the change over mechanism and the valve seating. It is likely that only replacement of the head will be necessary, if the complete valve requires replacement proceed to (ii).

(i) Wax Capsule Head

a. Remove the white front case and base panel. See 5.1 & 5.2 in 'Routine Maintenance'.
b. Lower the control panel assembly by undoing the securing screw at the top right hand side of the control panel.
c. Close the 15mm cold water isolating valve, open the lowest hot water tap and remove the D.H.W drain screw in the isolating valve to drain the system.
d. Close the central heating isolating valves, reduce the system pressure by opening the pressure relief valve and drain the water from the heating system by removing the drain plug from the underside of the pump manifold.
e. Undo the two D.H.W pipe connections to the valve head. Retain the two pipe seals.
f. Unscrew the two grub screws (2mm hexagon key) which hold the head to the main body. Pull the head forwards using a twisting action and carefully remove the head. Note the position of the loose brass cylinder on the wax capsule push rod and transfer onto new head assembly.
g. Fit new wax capsule head, re-assemble in reverse order. Replace pipe seals is necessary.

(ii) Complete valve replacement

a. Remove the white front case and base panel. See 5.1 & 5.2 in 'Routine Maintenance'.
b. Lower the control panel assembly by undoing the securing screw at the top right hand side of the control panel.
c. Close the 15mm cold water isolating valve, open the lowest hot water tap and remove the D.H.W drain screw on the isolating valve to drain the system.
d. Close the central heating isolating valves, reduce the system pressure by opening the pressure relief valve and drain the water from the heating system by removing the drain plug from the underside of the pump manifold.
e. Undo the two D.H.W pipe connections from the head of the diverter valve. Retain the pipe seals.
f. Undo the Central heating pipe connections to the diverter valve body and loosen the two nuts retaining the C.H. Flow and Return pipe tails.
g. Remove the locknut at the rear of the diverter valve holding the valve to the front cross brace.
h. Undo connection to the pump manifold and withdraw the diverter valve from the boiler. Transfer the water pressure switch and drain cock to the new valve and re-assemble in reverse order.

6.25 Expansion Vessel D.H.W.

(Fig. 34)

Isolate the electrical supply prior to this operation.

a. Remove the white front case and base panel. See 5.1 & 5.2 in 'Routine Maintenance'.
b. Lower the control panel assembly by undoing the securing screw at the top right hand side of the control panel. Close the isolating valve on the cold water inlet and open the lowest hot water tap. Remove the drain screw on the isolating valve to completely drain the appliance. Replace drain screw in isolator valve.
c. Remove the access panel to the left of the transformer. Temporarily remove the transformer - See 6.31.

Note: It is not necessary to fully remove the top right hand screw.

d. Release the vessel by unscrewing it from the inlet manifold.
e. Carefully withdraw the vessel through the access hole. Refit new component.
f. Re-assemble in reverse order, using a new sealing washer. Open the isolating valve, and check for leaks.

6.26 Expansion Vessel C.H.

In the unlikely event of a failure of the C.H. expansion vessel it is recommended that a new vessel be fitted exterior to the boiler. It should be positioned on the C.H. Return pipe (see Fig. 7) as close to the boiler as possible. If however, the vessel must be replaced then the following procedures may by used. Installations with vertical flue systems must be fitted with exterior expansion vessels if the flue system can not easily be raised a minimum of 50mm.

Note: It will simplify fitment of the vessel if a length of string or flexible wire is attached to the end of the flexible pipe and passed down the rear of the appliance through the back panel hole and used as a guide to thread the pipe during installation.

PROCEDURE 1. Horizontal flues only.

If the clearance above the boiler is **greater than 300mm** proceed as follows:

a. Remove the white front case. See 5.1 in 'Routine Maintenance'.
b. Lower the control panel assembly by undoing the securing screw at the top right hand side of the control panel.
c. Close the central heating flow and return isolating valves, release the system pressure by operating the pressure relief valve drain the appliance by removing the drain plug on the underside of the pump manifold.
d. Undo the flexible pipe connection on the side of the pump manifold and remove the grommet. Push the flexible pipe through the hole in the back panel.
e. For rear outlet flues remove the flue elbow (4 screws)
f. Remove the top expansion vessel securing bracket assembly (four screws) and slide the vessel (complete with flexible pipe) upwards out of the appliance.
g. Remove the flexible pipe from the old vessel and refit (using a new sealing washer) to the new expansion vessel (at this stage the pre-charge pressure can be easily checked and corrected if necessary. The pressure should be at least equal to the system pressure at the appliance).
h. Fit the new expansion vessel and re-assemble in reverse order. Ensure that the vessel is located correctly in the lower support bracket. Route the flexible pipe through the hole in the back panel and refit grommet.

PROCEDURE 2

If the clearance above the appliance is **less than 300mm** the appliance must be removed from the wall.

a. Remove the complete casing assembly (front, base and sides)
b. Close all the isolating valves, reduce the pressures in the appliance by operating the pressure relief valve and opening the lowest hot water tap. Drain the remaining water in the boiler by removing the drain screw under the pump manifold (C.H.) and on the 15mm isolating valve (D.H.W).
c. Lower the control panel assembly by undoing the securing screw at the top right hand side of the control panel.
d. Disconnect the input wiring noting positions of wires and thread wiring out of control panel grommet/s.
e. Check the gas supply is isolated at the gas service cock, (1/4 turn of square head), undo the gas cock union nut and position nut clear of thread.
f. Undo the upper isolator valve connections on the C.H. flow, return and Cold water inlet valves. Similarly disconnect hot flow pipe, and pressure relief pipes.
g. Disconnect the flue elbow from the top of the appliance, (4 screws), lift the flue elbow off the boiler connection and rotate the elbow 180° to position the flue clear of the appliance. If a vertical flue system is fitted it will require raising approximately 50mm (2") to allow the boiler to be lifted off its hanging screws.
h. Remove the bottom boiler securing screw then loosen the appliance upper securing screws and lift the boiler off the wall. Place unit face downwards on the floor. Care should be taken not to damage the pressure gauge or electronics.
j. Access can now be made to the expansion vessel. Undo the flexible pipe connection to the vessel and remove the screws retaining the upper expansion vessel bracket to release the vessel from the appliance.
k. Fit a new expansion vessel and re-assemble in reverse order, using a new sealing washer. At this stage it is advisable to check the pre-charge.

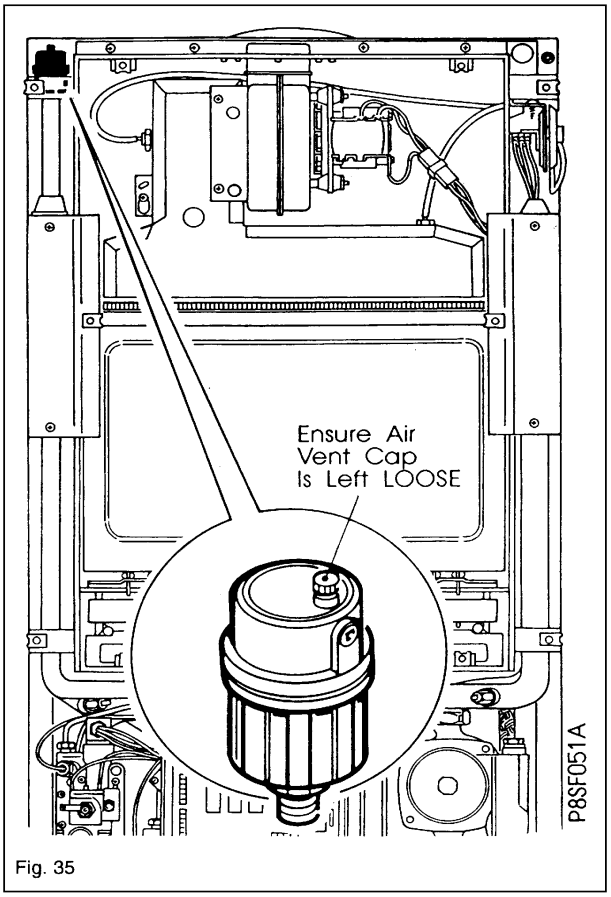

Fig. 35

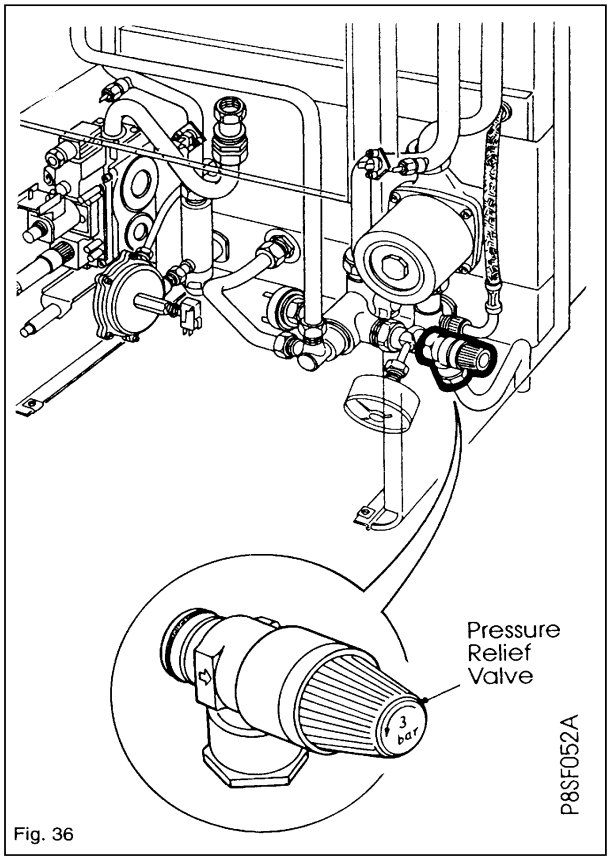

Fig. 36

6.26 Heat Exchanger (Fig. 24).

a. Perform 5.1 to 5.6 & 5.8 in 'Routine Maintenance'. Remove the combustion chamber insulation by removing each side panel retaining screw and pulling the complete side panel /insulation assembly forwards. The rear insulation can remain in situ.
b. Close all the isolating valves, reduce the pressures in the appliance by operating the pressure relief valve and opening the lowest hot water tap. Drain the remaining water in the boiler by removing the drain screws under the pump manifold (C.H.) and on the 15mm isolating valve (D.H.W). Undo the heat exchanger connection to the auto air vent pipe.
c. Disconnect the electrical connections from the C.H. overheat thermostat. The control box should be protected from water spillage.
d. Release the four spring clips retaining the heat exchanger tails by pulling the clip forwards and towards the centre of the appliance and ease the heat exchanger up, out of the housings.
e. The heat exchanger waterways can now be descaled or a replacement heat exchanger can be fitted, in which case the overheat thermostat must be transferred to the new heat exchanger.
f. Re-assemble in reverse order. Use a soap solution to lubricate the new 'O' rings when fitting the new heat exchanger, also, ensure the heat exchanger is pushed fully down. Re-charge the system as described in section 1.6 and check the joints for leaks.

6.28 Automatic Air Vent (Fig. 35)

a. Remove the white front case, base panel and white left hand side panel. See 5.1, 5.2 & 5.3 in 'Routine Maintenance'.
b. Close the central heating isolating valves, reduce the system pressure by opening the pressure relief valve, then part drain the water from the boiler by opening the bleed valve on the right hand side of the diverter valve.
c. Using a spanner to prevent the retaining nut from rotating unscrew the auto air vent and remove from the appliance. If there is insufficient space, removal will be eased if the complete auto air vent and pipe assembly is disconnected from the heat exchanger and then raised above the top of the air box. To do this the fan and fluehood will need to be removed, see 5.4 & 5.5 in 'Routine Maintenance'
d. Fit new air vent and sealing washer **ensuring the air vent cap is left loose.**
Re-assemble in reverse order, ensure that the grommet is correctly positioned. Re-charge the system as described in section 1.6 and check for leaks.

6.29 Pressure Relief Valve (Fig. 36)

a. Remove the white front case and base panel. See 5.1 & 5.2 in 'Routine Maintenance'.
b. Close the central heating isolating valves, reduce the system pressure by opening the pressure relief valve, then drain the water from the appliance by removing the drain off screw on the underside of the pump manifold.
c. Undo the outlet tube nut and fully remove the two grub screws holding the pressure relief valve to the pump manifold, undo the top compression joint on the pressure relief valve discharge pipe then remove the valve.

Note: The outlet of the pressure relief valve is an olive connection.

d. Fit the new pressure relief valve using a new 'O' ring seal and soap solution as a lubricant. Re-assemble in reverse order.
e. Recharge the system as described in section 1.6 and check for leaks.

6.30 Water Pressure Switch - 80/80e Only

(Fig. 37)

a. Remove the white front case and base panel. See 5.1 & 5.2 in 'Routine Maintenance'.
b. Close the central heating isolating valves, reduce the system pressure by opening the pressure relief valve, then drain the water from the appliance by removing the drain off screw on the underside of the pump manifold.
c. Lower the control panel assembly by undoing the securing screw at the top right hand side of this control panel.
d. Remove the two wire connections and unscrew the switch from the diverter valve.
e. Fit the new switch using a new sealing washer.
f. Re-assemble in reverse order. Electrical polarity is not important. If there are three terminals, do not use the terminal insulated by sleeving.
The wires must be connected to the terminals on the switch body marked 1 & 2. (Normally Closed)
g. Open the isolating valves. Re-charge the system as described in section 1.6 and check for leaks.

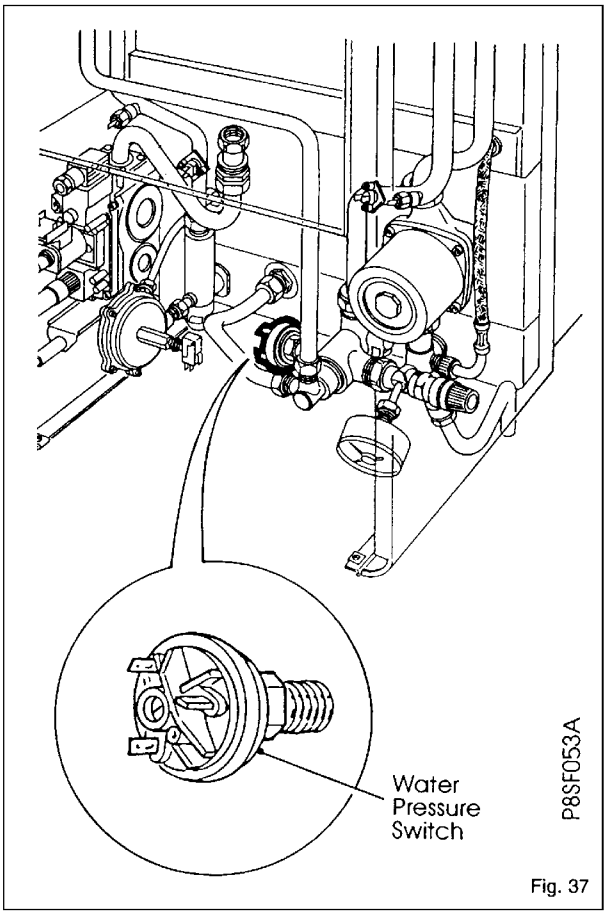

Fig. 37

6.31 Transformer Assembly

(Fig. 38)

a. Remove the white front case and base panel. See 5.1 & 5.2 in 'Routine Maintenance'.
b. Lower the control panel assembly by undoing the securing screw at the top right hand side of the control panel.
c. Remove the transformer wiring loom from the retaining cable ties and unplug the connector to the electronic control board PL 6 (top right hand side of control board). Thread the wiring out of the control panel.
d. Remove the two screws retaining the transformer to the back panel and remove transformer from appliance.
e. Fit the new transformer assembly in reverse order.

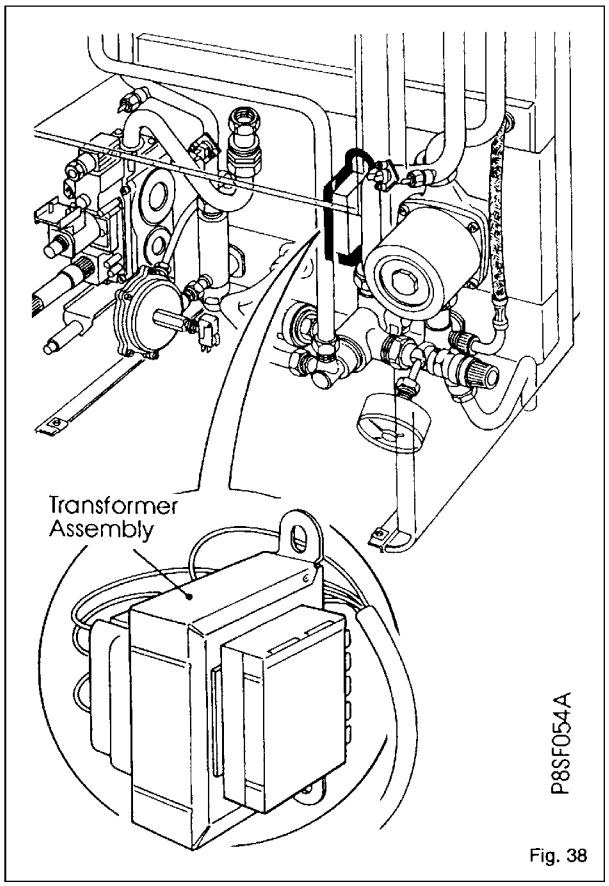

Fig. 38

6.32 Sight Glass With Securing Frame

a. Remove the white front case, base panel and air box main cover. See 5.1, 5.2 & 5.3 in 'Routine Maintenance'.
b. On the inside of the inner door straighten the four retaining tags. Remove sight glass.
c. Renew the sight glass and use a new gasket to seal.
d. Re-assemble in reverse order.

7.1 Control Flow Sequence - Permanent Pilot - Page 41

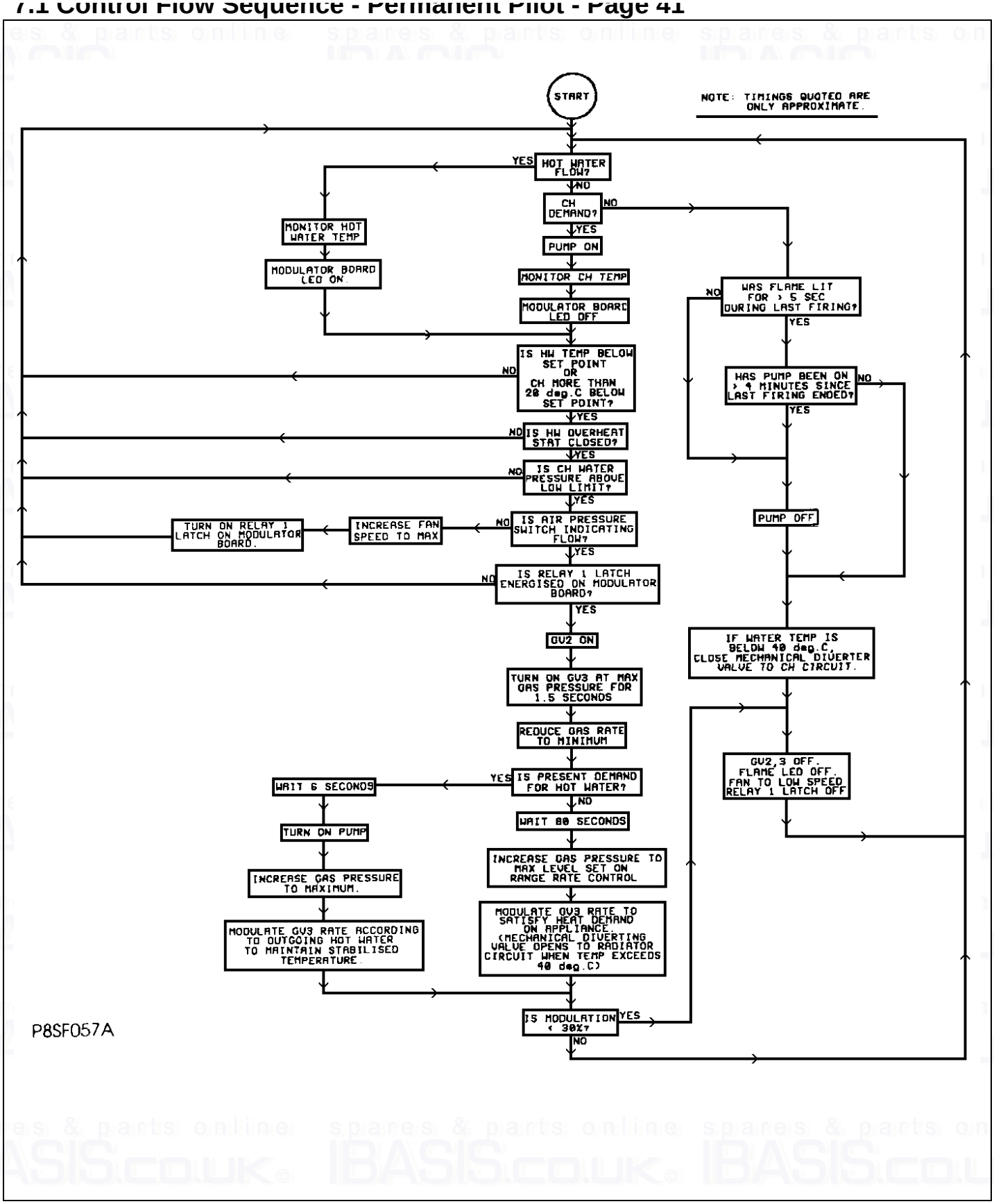

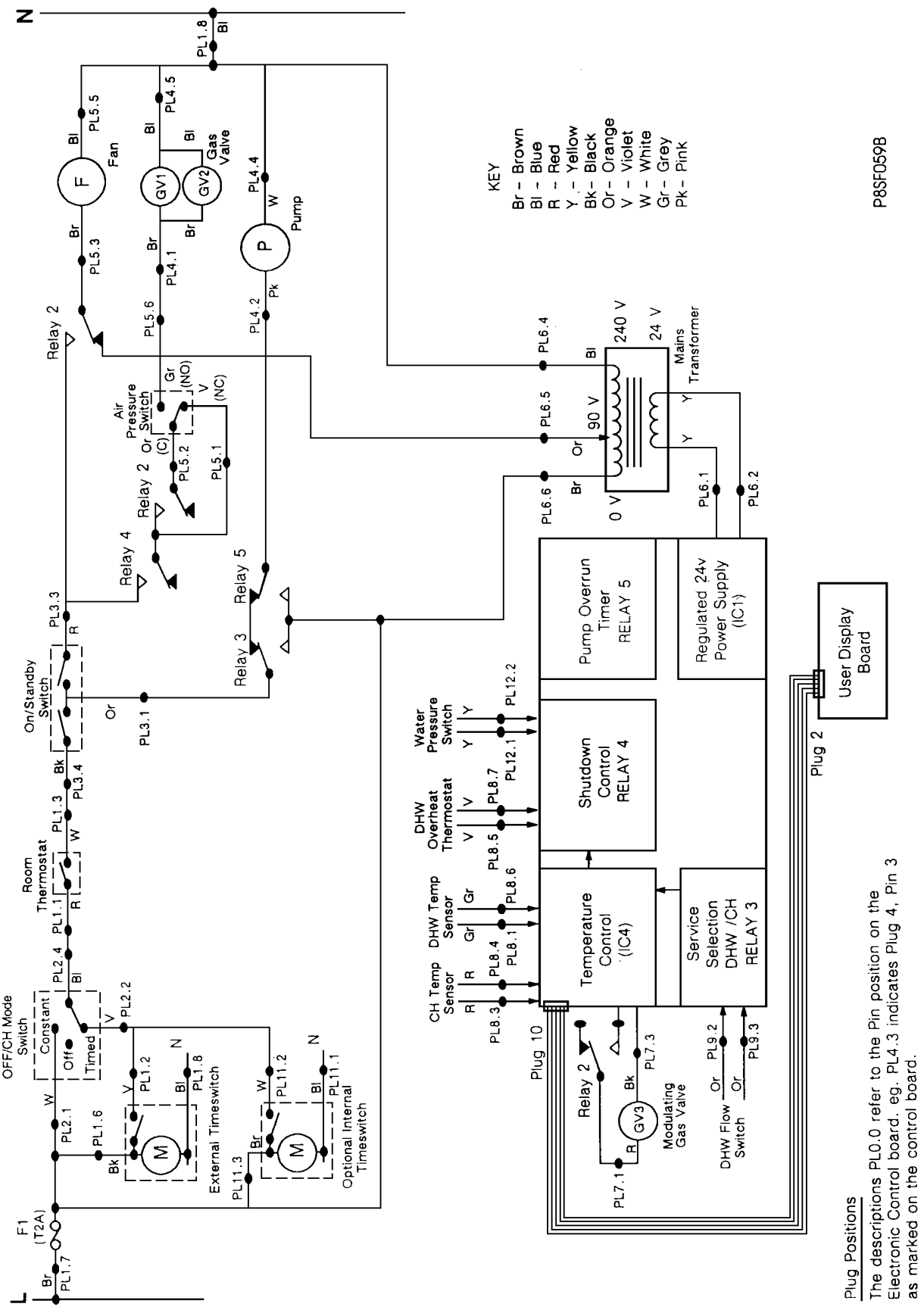

Plug Positions

The descriptions PL0.0 refer to the Pin position on the Electronic Control board. eg. PL4.3 indicates Plug 4, Pin 3 as marked on the control board.

Fig. 40

7.3 Fault Finding - Permanent Pilot - Page 43

Before attempting any electrical fault finding, carry out a preliminary electrical test by checking: for short circuits, fuse failure, incorrect polarity, earth continuity and resistance to earth. For replacement of fault component, (see Section - Component Replacement). To assist in fault-finding, the logic sequence of the electronics control circuit precedes the fault-finding charts.

Preliminary Actions:

A) Set Boiler Switch to Stand-by.
B) Set Heating Switch to 'OFF' (centre).
C) Set H.W. & C.H. Temp. Controls to MAX.
D) Turn OFF all Hot Water Taps.
E) Ensure all isolating valves at the base of the appliance are OPEN.
F) Turn ON EXTERNAL GAS & ELECTRICAL supplies.
G) Arrange for system controls to be calling for heat.

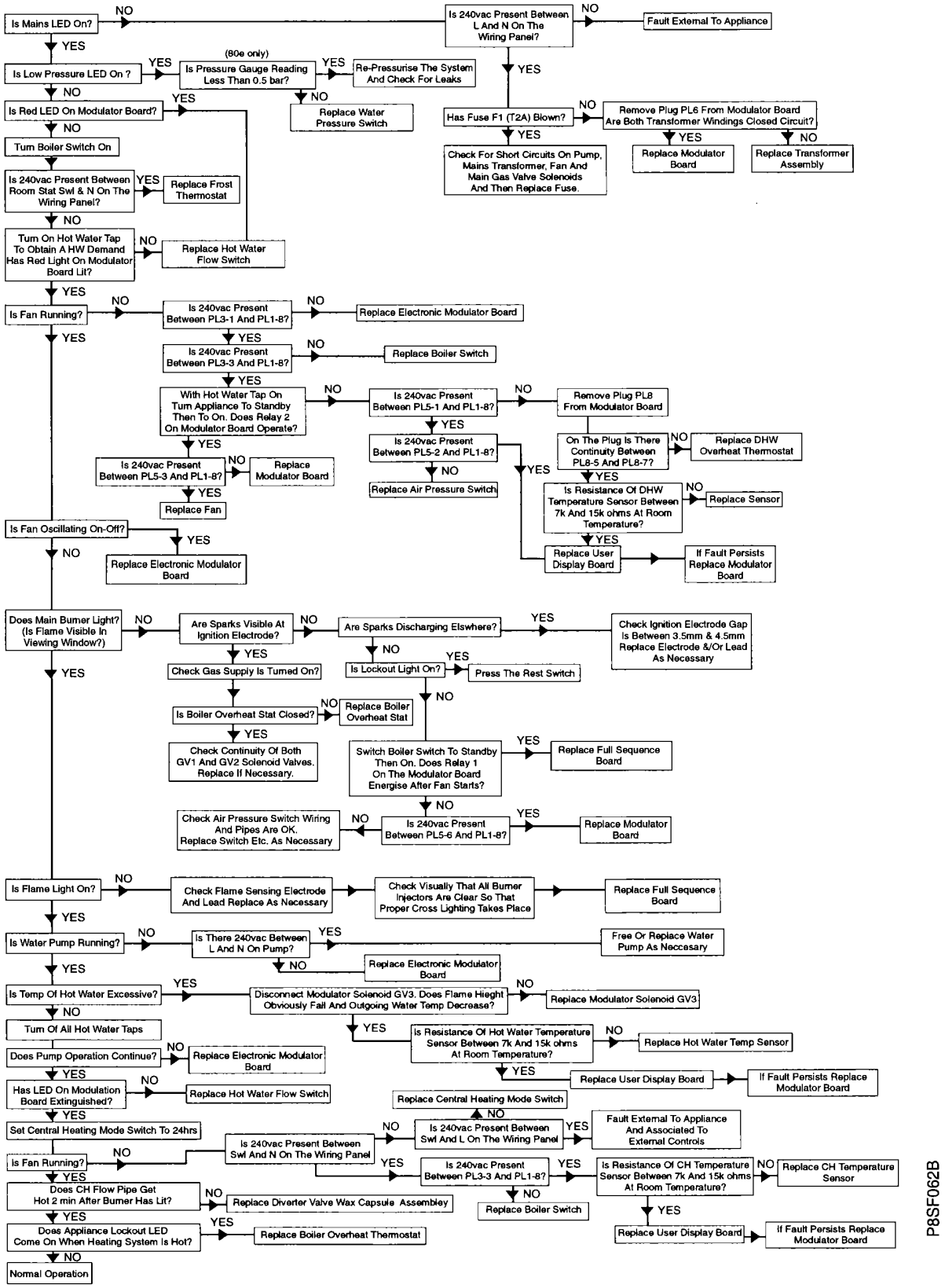

Fig.41

7.4 Electrical Diagram - Permanent Pilot - Page 44

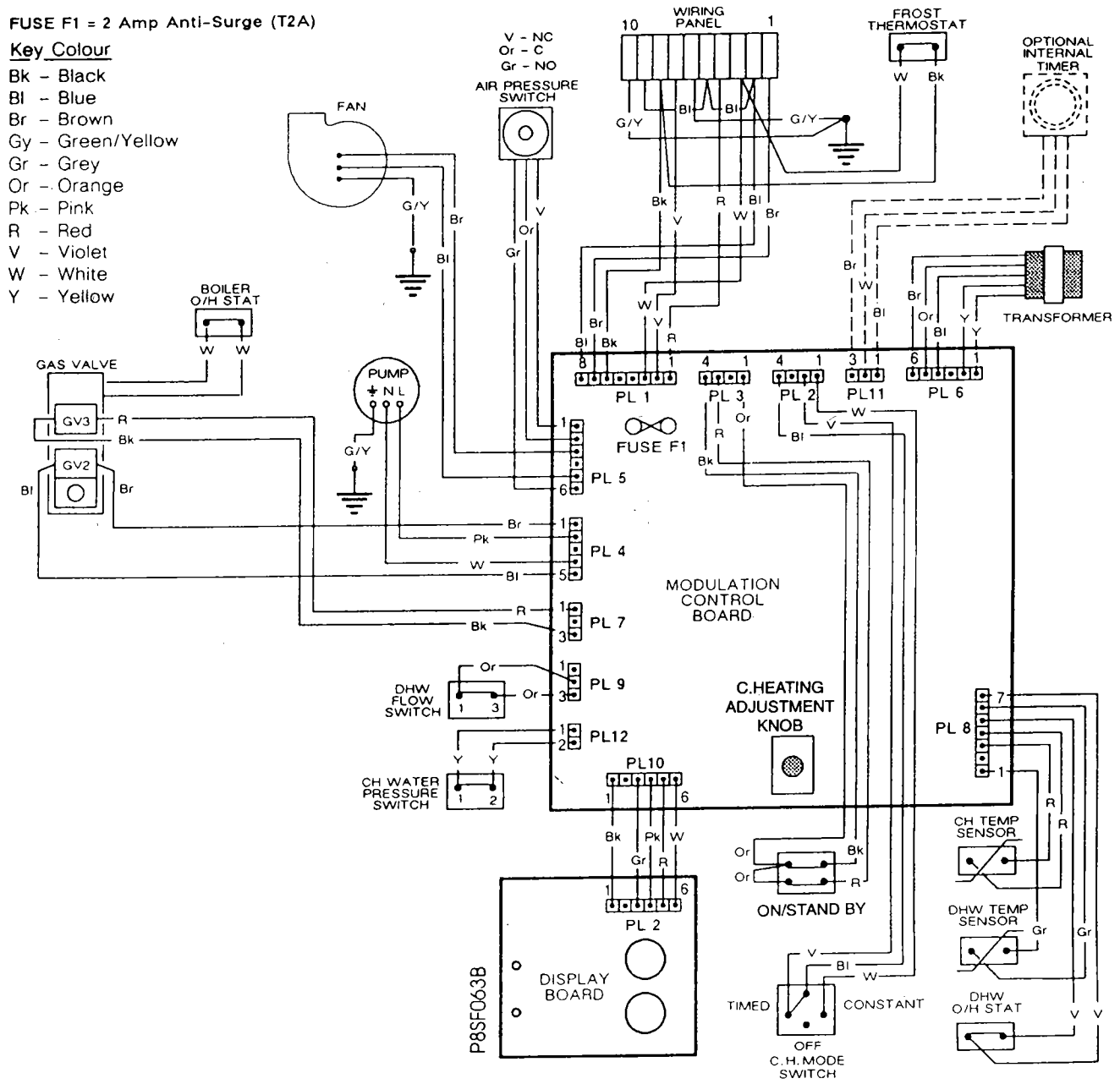

Fig. 42

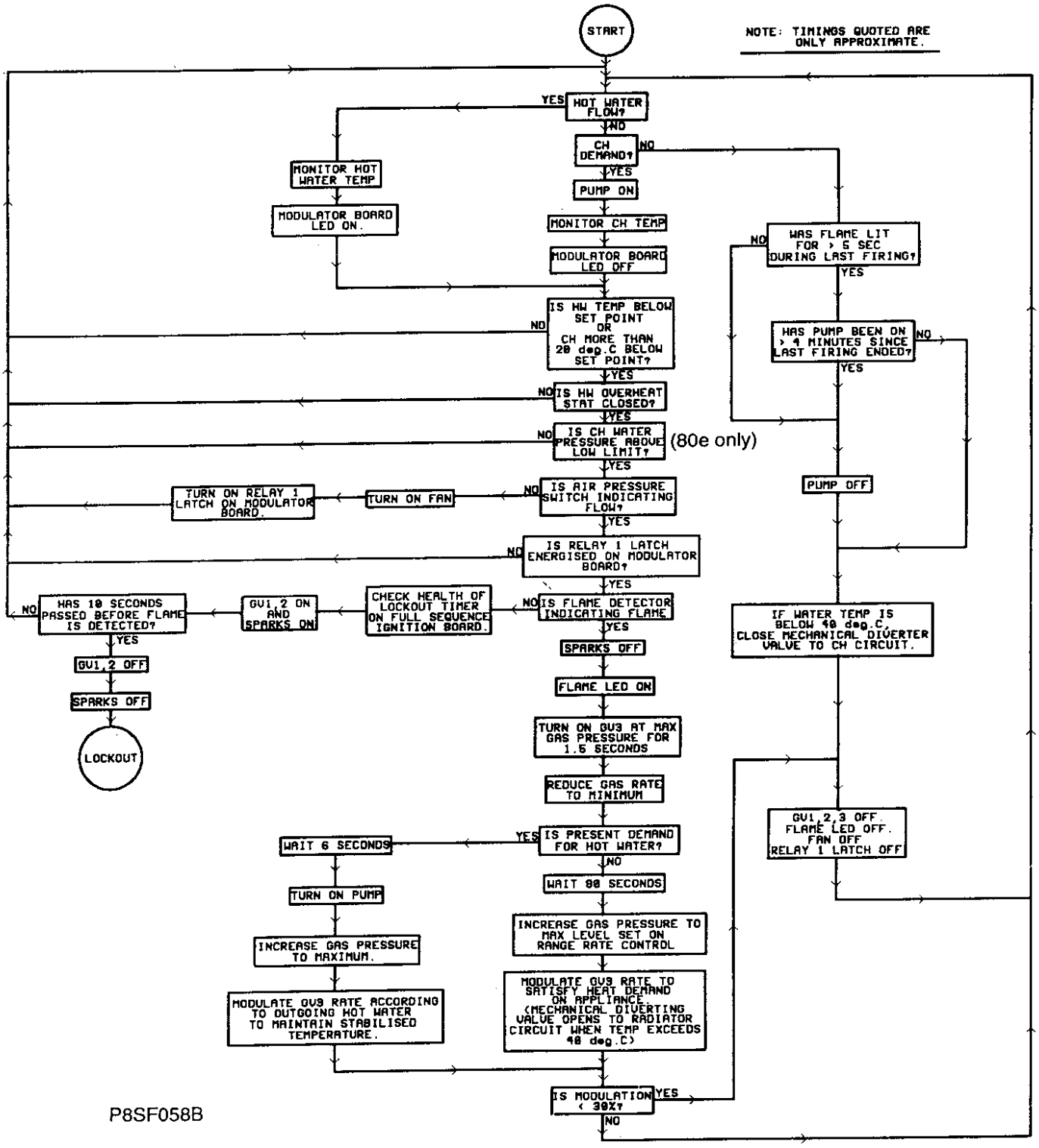
START
NOTE: TIMINGS QUOTED ARE ONLY APPROXIMATE.
HOT WATER FLOW?
YES
NO
CH DEMAND?
NO
YES
MONITOR HOT WATER TEMP
MODULATOR BOARD LED ON.
PUMP ON
MONITOR CH TEMP
MODULATOR BOARD LED OFF
WAS FLAME LIT FOR > 5 SEC DURING LAST FIRING?
NO
YES
IS HW TEMP BELOW SET POINT OR CH MORE THAN 20 deg.C BELOW SET POINT?
NO
YES
HAS PUMP BEEN ON > 4 MINUTES SINCE LAST FIRING ENDED?
NO
YES
IS HW OVERHEAT STAT CLOSED?
NO
YES
IS CH WATER PRESSURE ABOVE LOW LIMIT?
NO
YES
(80e only)
TURN ON RELAY 1 LATCH ON MODULATOR BOARD.
TURN ON FAN
IS AIR PRESSURE SWITCH INDICATING FLOW?
NO
YES
PUMP OFF
IS RELAY 1 LATCH ENERGISED ON MODULATOR BOARD?
NO
YES
HAS 10 SECONDS PASSED BEFORE FLAME IS DETECTED?
NO
YES
GV1,2 ON AND SPARKS ON
CHECK HEALTH OF LOCKOUT TIMER ON FULL SEQUENCE IGNITION BOARD.
IS FLAME DETECTOR INDICATING FLAME
NO
YES
IF WATER TEMP IS BELOW 40 deg.C, CLOSE MECHANICAL DIVERTER VALVE TO CH CIRCUIT.
GV1,2 OFF
SPARKS OFF
LOCKOUT
SPARKS OFF
FLAME LED ON
TURN ON GV3 AT MAX GAS PRESSURE FOR 1.5 SECONDS
REDUCE GAS RATE TO MINIMUM
GV1,2,3 OFF. FLAME LED OFF. FAN OFF RELAY 1 LATCH OFF
WAIT 6 SECONDS
YES
IS PRESENT DEMAND FOR HOT WATER?
NO
WAIT 80 SECONDS
TURN ON PUMP
INCREASE GAS PRESSURE TO MAXIMUM.
INCREASE GAS PRESSURE TO MAX LEVEL SET ON RANGE RATE CONTROL
MODULATE GV3 RATE ACCORDING TO OUTGOING HOT WATER TO MAINTAIN STABILISED TEMPERATURE.
MODULATE GV3 RATE TO SATISFY HEAT DEMAND ON APPLIANCE (MECHANICAL DIVERTING VALVE OPENS TO RADIATOR CIRCUIT WHEN TEMP EXCEEDS 40 deg.C)
IS MODULATION < 30%?
YES
NO
P8SF058B

Fig. 43

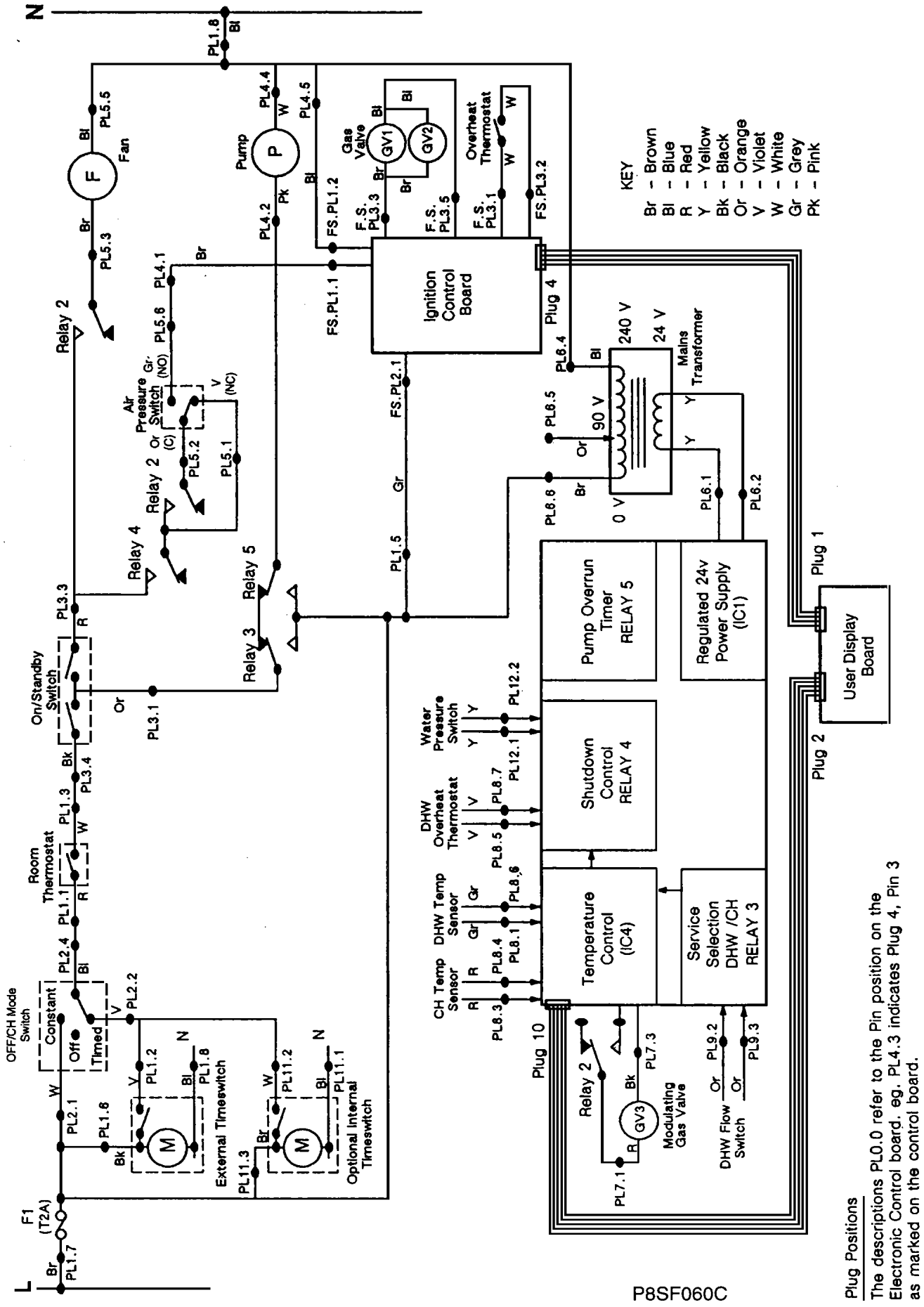

P8SF060C

Plug Positions

The descriptions PL0.0 refer to the Pin position on the Electronic Control board. eg. PL4.3 indicates Plug 4, Pin 3 as marked on the control board.

8.3 Fault Finding - Electronic & Saver - Page 47

Before attempting any electrical fault finding, carry out a preliminary electrical test by checking: for short circuits, fuse failure, incorrect polarity, earth continuity and resistance to earth. For replacement of fault component, (see Section - Component Replacement). To assist in fault-finding, the logic sequence of the electronics control circuit precedes the fault-finding charts.

Preliminary Actions: **A)** Set Boiler Switch to Stand-by. **B)** Set Heating Switch to 'OFF' (centre). **C)** Set H.W. & CH Temp. Controls to MAX. **D)** Turn OFF all Hot Water Taps. **E)** Ensure all isolating valves at the base of the appliance are OPEN.**F)** Turn ON EXTERNAL GAS & ELECTRICAL supplies. **G)** Arrange for system controls to be calling for heat

8.4 Electrical Diagram - Electronic & Saver - Page 48

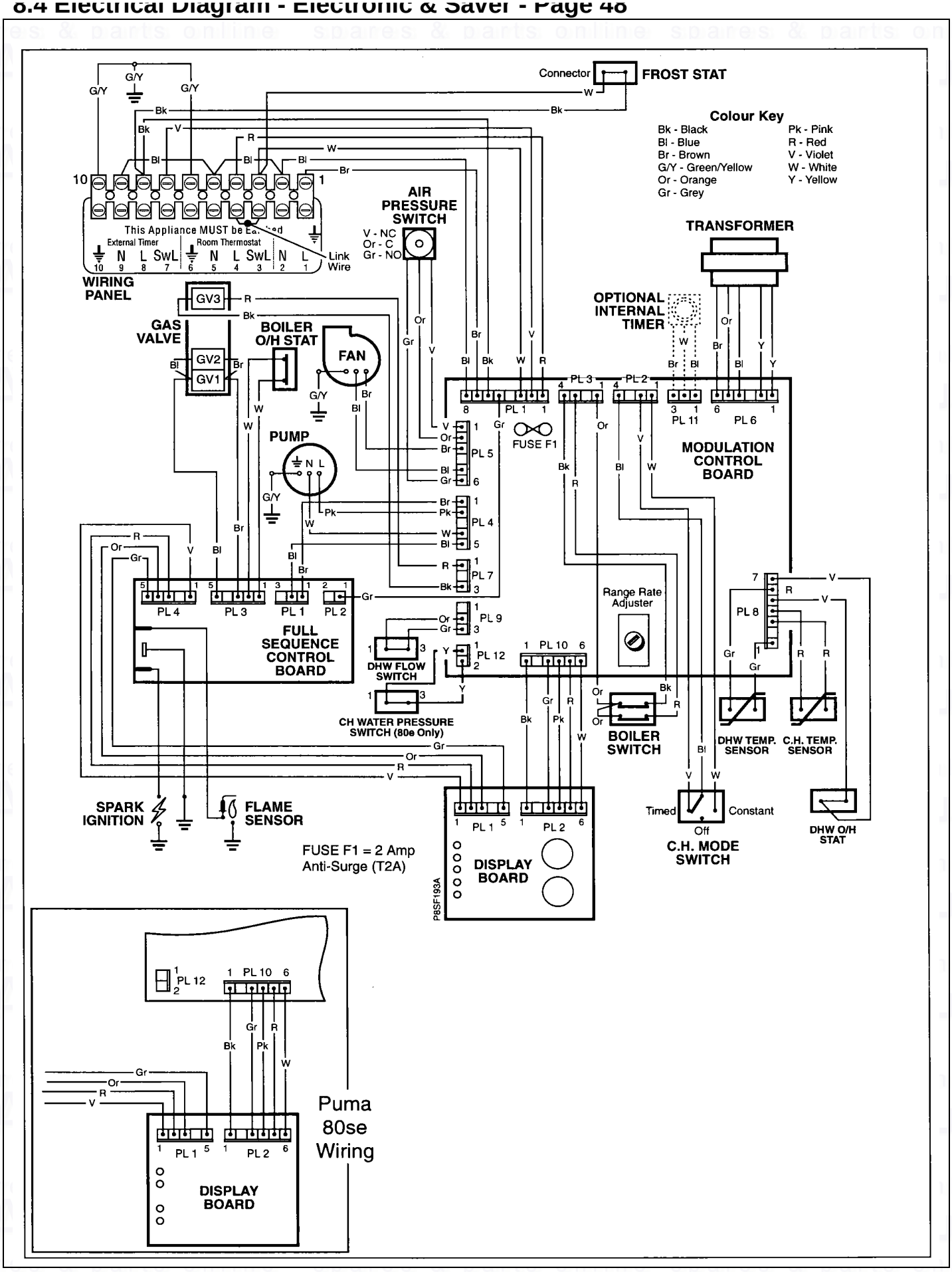

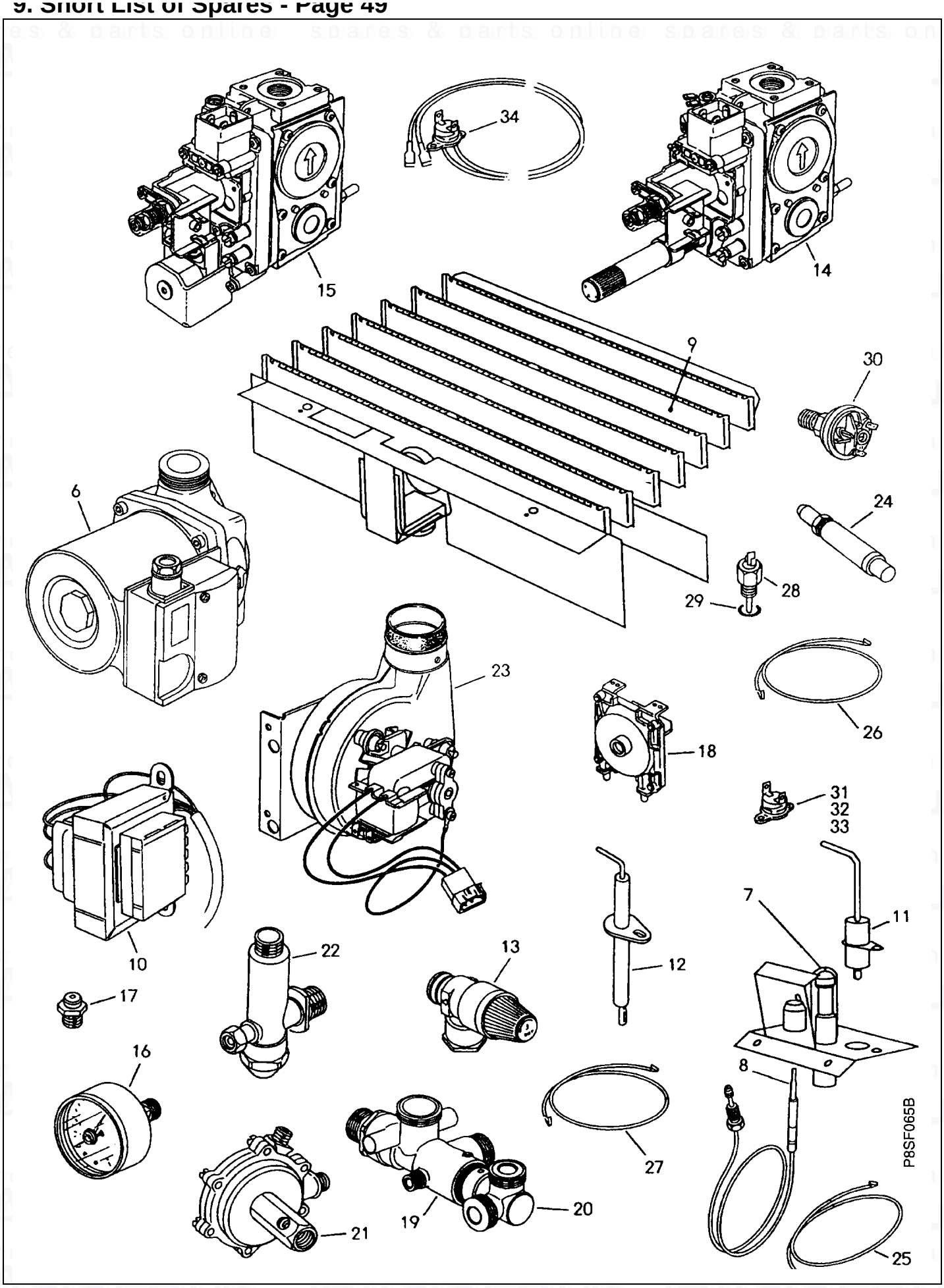
34
15
14
9
30
6
24
28
29
23
26
18
31
32
33
10
22
13
12
7
11
17
16
8
27
P8SF065B
21
19
20
25

Item	Description	Qty	Potterton Part No.	Gas Council Part No.
1	Modulation Control Board - 80	1	929685	289 550
2	Modulation Control Board - 80e	1	929686	289 551
2	Modulation Control Board - Saver	1	21/20760	
3	Display Board - 80	1	929687	289 552
4	Display Board - 80e	1	929688	289 553
4	Display Board - Saver	1	21/20761	
5	Full Sequence Control Board - 80e/Saver	1	929689	289 555
6	Pump Kit (Myson Compact)	1	929636	289 730
7	Pilot Burner Assembly Kit - 80	1	10/20175	
8	Thermocouple c/w Locknut - 80	1	10/20370	
9	Main Burner Assembly	1	10/20162	
10	Transformer c/w Wiring	1	929681	289 547
11	Spark Electrode - 80	1	22/20182	
12	Electrode Kit - 80e/Saver	2	929550	289 478
13	Pressure Relief Valve - 3 bar c/w 'O' Ring	1	929647	379 398
14	Gas Valve - SIT - 80	1	929578	379 467
15	Gas Valve - SIT - 80e/Saver	1	402988	379 349
16	Pressure Gauge	1	929644	289 531
17	Burner Injector, Polidoro 1.15mm	3	22/20207	
18	Air Flow Switch - Honeywell C6065A1093	1	642212	379 350
19	Diverter Valve Assembly Complete	1	929651	289 718
20	Wax Capsule Assembly	1	929803	289 741
21	D.H.W. Flow Switch	1	929673	289 724
22	D.H.W. Thermostat/Flow Limiter Assembly - 80/80e	1	929670	289 737
22	D.H.W. Housing Assembly - Saver	1	10/19717	
23	Fan Assembly	1	929501	379 342
24	Piezo Igniter Assembly	1	929583	289 717
25	Electrode Lead Assembly - 80	1	929544	289 475
26	Electrode Lead Assembly - 80e/Saver	1	929551	289 479
27	Detection Lead Assembly - 80e/Saver	1	929552	289 480
28	D.H.W/C.H. Temperature Sensors	2	430011	289 528
29	'O' Rings	2	929632	285 572
30	Water Pressure Switch	1	642215	379 615
31	C.H. Limit Thermostat (36TE21-12785) - 80e/Saver	1	929562	379 348
32	D.H.W. Overheat Thermostat (36TE21-12786)	1	929634	379 397
33	Frost Protection Thermostat (36TE21-12784)	1	929635	379 396
34	Overheat Thermostat c/w Leads - 80	1	929839	289 735

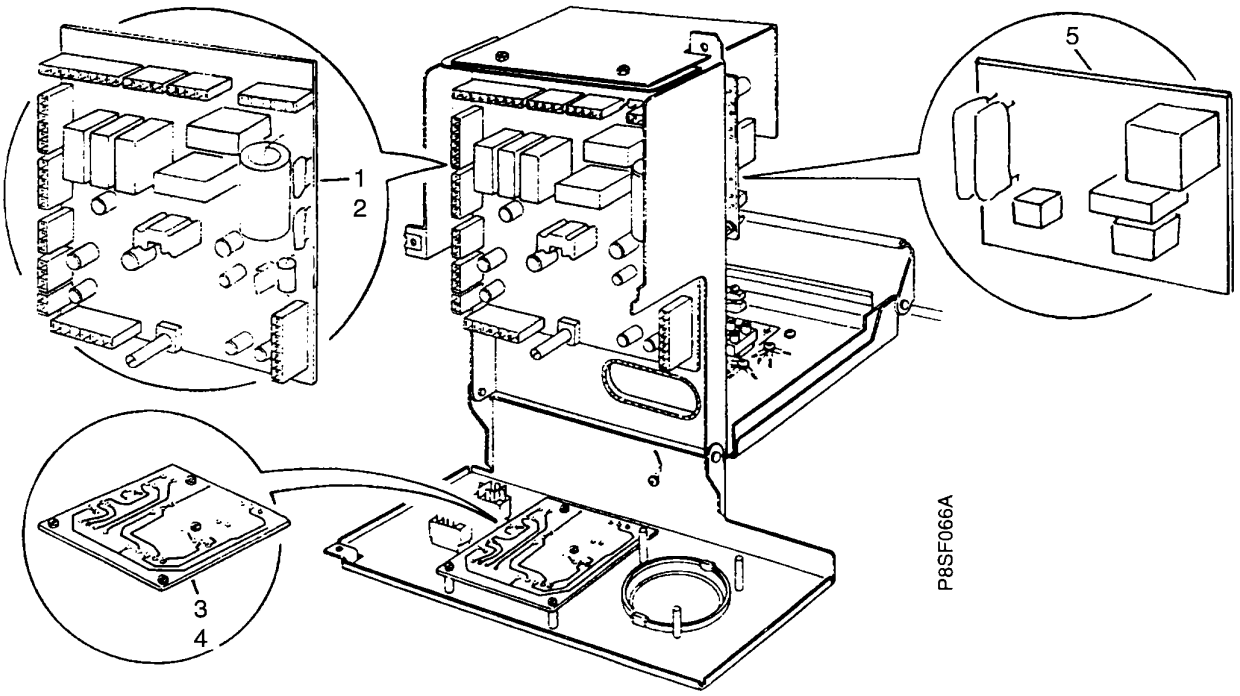

back page

spares & parts online IBASIS.co.uk©