# Installation & Service Instructions

## Puma Flowsure+

### Wall Mounted, Fanned, Room Sealed, Storage Combination Boiler

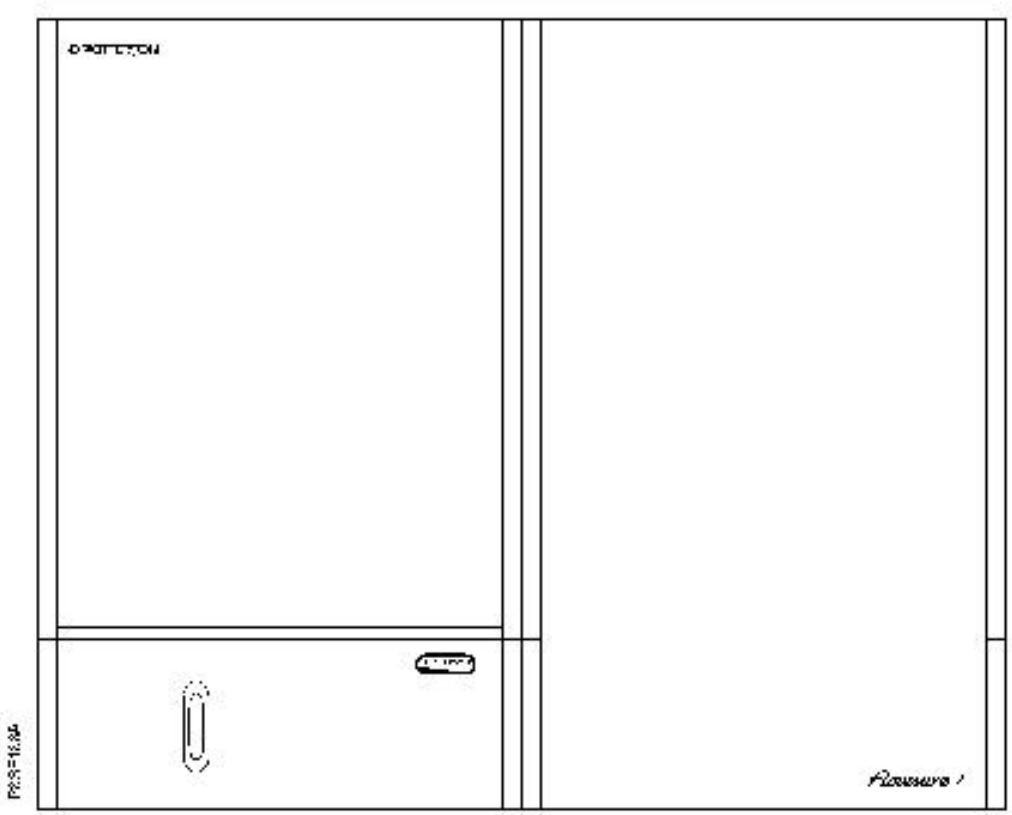

**THE GAS SAFETY (INSTALLATION AND USE) REGULATIONS 1994.**

‘‘ In your own interest, and that of safety, it is law that all gas appliances are installed by competent persons, in accordance with the above regulations. Failure to install appliances correctly could lead to prosecution.’’

The polythene bags used for packaging are a potential hazard to babies and young children and MUST BE DISPOSED OF IMMEDIATELY.

**LEAVE THESE INSTRUCTIONS WITH THE USER FOR USE ON FUTURE CALLS**

**For Use With Natural Gas (G20) Only At 20mbar**
**For Use in GB & IE**

**IMPORTANT**
PLEASE READ THIS BOOK BEFORE INSTALLING, OPERATING OR SERVICING THIS APPLIANCE.

# Contents - Page 2


**Technical Data** ..... **3**

**Introduction** ..... **4**

**1. Installation Requirements** ..... **6**
- 1.1 General Information ..... 6
- 1.2 Location of Boiler ..... 7
- 1.3 Flue Terminal and Ducting ..... 8
- 1.4 Air Supply ..... 9
- 1.5 Guide to System Requirements ..... 9
- 1.6 Mains Water Feed C.H ..... 10
- 1.7 Installation to an Existing System ..... 10
- 1.8 Hard Water Areas ..... 10
- 1.9 Pump Performance Curve ..... 10
- 1.10 Domestic Hot Water - 50 Litre Tank ..... 11
- 1.11 Electrical Supply ..... 13
- 1.12 Clearance Around the Appliance ..... 14

**2. Installation** ..... **15**
- 2.1 Unpacking ..... 16
- 2.2 Installation - Boiler ..... 16
- 2.3 Installation - Storage Tank ..... 17
- 2.4 Gas Connection ..... 18
- 2.5 D.H.W Supply ..... 18
- 2.6 C.H. Supply ..... 18
- 2.7 Pressure Relief Valve ..... 19
- 2.8 Wiring the Appliance ..... 19

**3. Commissioning** ..... **20**
- 3.1 Electrical Installation ..... 20
- 3.2 Gas Installation ..... 20
- 3.3 Initial Lighting ..... 21
- 3.4 Gas Pressure Adjustment ..... 22
- 3.5 Products of Combustion Measurement ..... 23
- 3.6 D.H.W Flow Rate ..... 24
- 3.7 Central Heating ..... 24
- 3.8 Temperature Controls ..... 24
- 3.9 Appliance Protection Devices ..... 24
- 3.10 Re-fit Outer Case ..... 25
- 3.11 Handing Over to the User ..... 25

**4. Servicing** ..... **26**

**5. Routine Maintenance** ..... **27**
- 5.1 Remove the White Front Case ..... 27
- 5.2 Remove Base Panel ..... 27
- 5.3 Remove the Air Box Covers ..... 27
- 5.4 Remove the Fan Assembly ..... 27
- 5.5 Remove the Flue Hood ..... 27
- 5.6 Remove the Combust. Cham. Front Panel ..... 27
- 5.7 To Inspect and Clean the Boiler ..... 27
- 5.8 To Remove the Burner ..... 29
- 5.9 Gas Pressure Adjustment ..... 29
- 5.10 The Central Heating Sealed System ..... 29
- 5.11 Other Components ..... 29

**6. Component Replacement** ..... **31**
- 6.1 Central Heating Overheat Thermostat ..... 32
- 6.2 Sensor and Ignition Electrode ..... 32
- 6.3 Sensor and Ignition Leads ..... 32
- 6.4 Burner ..... 32
- 6.5 Injectors ..... 32
- 6.6 Gas Valve ..... 32
- 6.7 Modulating Valve ..... 33
- 6.8 First Solenoid Valve ..... 33
- 6.9 Second Solenoid Valve ..... 33
- 6.10 Case Seal ..... 33
- 6.11 Central Heating and Boiler Switch ..... 33
- 6.12 Electronic Control Boards ..... 35
- 6.13 Air Pressure Switch ..... 36
- 6.14 Fan ..... 36
- 6.15 Fan Seals ..... 36
- 6.16 Flow Temperature Sensor ..... 36
- 6.17 Pressure Gauge ..... 36
- 6.18 Pump ..... 37
- 6.19 Expansion Vessel C.H ..... 37
- 6.20 Heat Exchanger ..... 38
- 6.21 Automatic Air Vent ..... 39
- 6.22 Pressure Relief Valve ..... 39
- 6.23 Transformer Assembly ..... 40

**7. Fault Finding** ..... **41**

**8. Control Flow Sequence** ..... **42**

**9. Functional Flow** ..... **43**

**10. Schematic Wiring Diagram** ..... **44**

**11. Electrical Diagrams** ..... **45**

**12. Short List of Spares** ..... **46**


spares & parts online IBASIS.CO.UK

# Technical Data - Page 3

***Boiler Details***

| | | |
|---|---|---|
| Heat Input: | kW | 30.00 - Max. |
| | Btu/hr | 102,350 |
| | kW | 22.5 - Range Rate |
| | Btu/hr | 76,760 |
| | kW | 14.4 - Min |
| | Btu/hr | 49,130 |
| Heat Output: | kW | 24.00 - Max. |
| | Btu/hr | 81,880 |
| | kW | 17.2 - Range Rate |
| | Btu/hr | 58,680 |
| | kW | 10.4 - Min |
| | Btu/hr | 35,480 |
| Gas Rate | m³/hr | 2.86 |
| | ft³/hr | 101 |
| Inlet Pressure | mbar | 20 (18 - 25mbar) |
| Burner Pressure | | |
| | mbar | 15.0 - Max |
| | in/wg | 6.0 |
| | mbar | 8.3 - Range Rate |
| | in/wg | 3.3 |
| | mbar | 3.5 - Min |
| | in/wg | 1.4 |

| | |
|---|---|
| Classifications | I2H, C12 & C32 IP20 |
| Pilot Burner | Bray AB 1920 |
| Main Burner | Bray AB 24081M |
| Gas Control Valve: | SIT Controls Nova 827 (0.827.127)<br>Inc. 1st Solenoid Valve (0.007.424)<br>Inc. 2nd Solenoid Valve (0.007.406)<br>Inc. Modulator - 28V. DC. (0.007.413) |
| Burner Injector | 3 off |
| Electrical Supply | 230V ~ 50Hz |
| Fuse Rating | External 3A |
| Packed Weight | 58.5kg (129lbs) |
| Water Content | 1.85 litres - C.H. |

*Connections - Gas*

| | |
|---|---|
| Gas | ½" B.S.P.F. Gas Cock |

*Connections - Water*

| | |
|---|---|
| Inlet DHW | 15mm Compression Isolating Valve |
| Outlet DHW | 15mm Copper Pipe |
| Flow CH | 22mm Compression Isolating Valve |
| Return CH | 22mm Compression Isolating Valve |
| Safety Discharge | 15mm Copper Pipe |

*C.H. Sealed System*

| | |
|---|---|
| Operating Pressure | 2.5bar (36.3lb/in²) Max |
| Operating Pressure | 0.5bar (7.25lb/in²) Min |
| Expansion Vessel | 10 litre<br>(Pre-charge Pressure 1.0bar) |
| Temperature Rise across the Boiler | 30°C - Max |
| Central Heating Flow Temperature | 85°C - Max. Load<br>90°C - Min. Load |
| Central Heating Return Temperature | 74°C (Nominal) |

***Storage Tank Details - 50 Litre***

| | |
|---|---|
| Packed Weight | 20kg |
| Full Weight | 65kg |
| Max. Cold Water Supply Pressure | 10 bar |
| Normal Secondary Operating Pressure | 3.5 bar |
| Secondary Expansion Vessel Charge Pressure | 3.5 bar |
| Water Capacity | 2.9 litres primary<br>41.8 litres secondary |
| T & P Valve | 90°C / 7 bar |
| Pressure Relief Valve | 6 bar |

# Introduction - Page 4

**GAS SAFETY (INSTALLATION AND USE) REGULATIONS 1994.**

The appliance must be installed and serviced by a competent person, in accordance with the above Regulations.

In the UK 'Corgi' Registered Installers (including the Regions of British Gas) undertake the work to a safe and satisfactory standard.

Failure to install appliances correctly could lead to prosecution.

It is in your own interest, and that of safety, to ensure that the Regulations are complied with.

Samples of the Puma Flowsure+ gas boilers have been examined by Gastec, a Netherlands Notified Body. The range is certified to comply with the essential requirements of the Gas Appliance Directive 90/396/EEC, the Low Voltage Directive 72/23/EEC and shows compliance with the Electro Magnetic Compatibility Directive 89/336/EEC and are therefore permitted to carry the CE Mark.

The appliance has been tested and approved by the WRc as meeting the requirements of G3 and L of the Building regulations and water Bylaws Scheme - Approved Products.

The Puma Flowsure+ boilers are fully automatic, wall mounted, fan assisted, room sealed storage combination boilers, designed to operate on Natural Gas only.

The Puma Flowsure+ adjusts automatically to provide central heating outputs between 24 kW (81,880 Btu/h) and 10.4 kW (35,480 Btu/h) to suit the system requirements.

Domestic hot water has priority over the central heating system and is generated within the tank.

The range of horizontal and vertical flue systems with small terminals simplify siting and installation.

The combination boilers are designed for use with fully pumped sealed system only.

They are supplied fully tested and assembled with a circulating pump, diverter valve, pressure gauge, pressure relief valve, and expansion vessels.

Fig. 1 shows the main components of the boiler assembly.

A central heating switch controls the choice of service between central heating/hot water and hot water only.

The boiler water flow system is shown in Fig. 2.

With the central heating switch set to 'Off' and the boiler switch set to 'On', the combination boiler fires only when hot water is drawn off and occasionally to maintain the temperature of the stored hot water.

With the central heating switch set to 'Timed' the boiler will operate the central heating for the time periods set on the optional internal or externally mounted timeclocks.

If 'Constant' is selected the boiler will operate continuously.

The temperature of the central heating can be changed by adjusting the knob on the front of the appliance.

The domestic hot water is supplied at a pre-set temperature determined by the d.h.w mixing valve setting.

If domestic hot water is drawn off while the central heating is running the combination boiler will automatically transfer the boiler heat output to the domestic hot water supply.

At the minimum hot water draw-off rate the maximum temperature is limited to 60°C by the mixing valve in the tank. This temperature can be changed by adjusting the mixing valve knob.

The combination boiler has a white front case which can be removed for servicing.

Data plates are positioned on the front of the air box door and a boiler serial badge is on the underside of the air box.

A duplicate serial badge is positioned on the underside of the case base for customer reference.

A data badge is also located on the tank.

spares & parts online IBASIS.co.uk

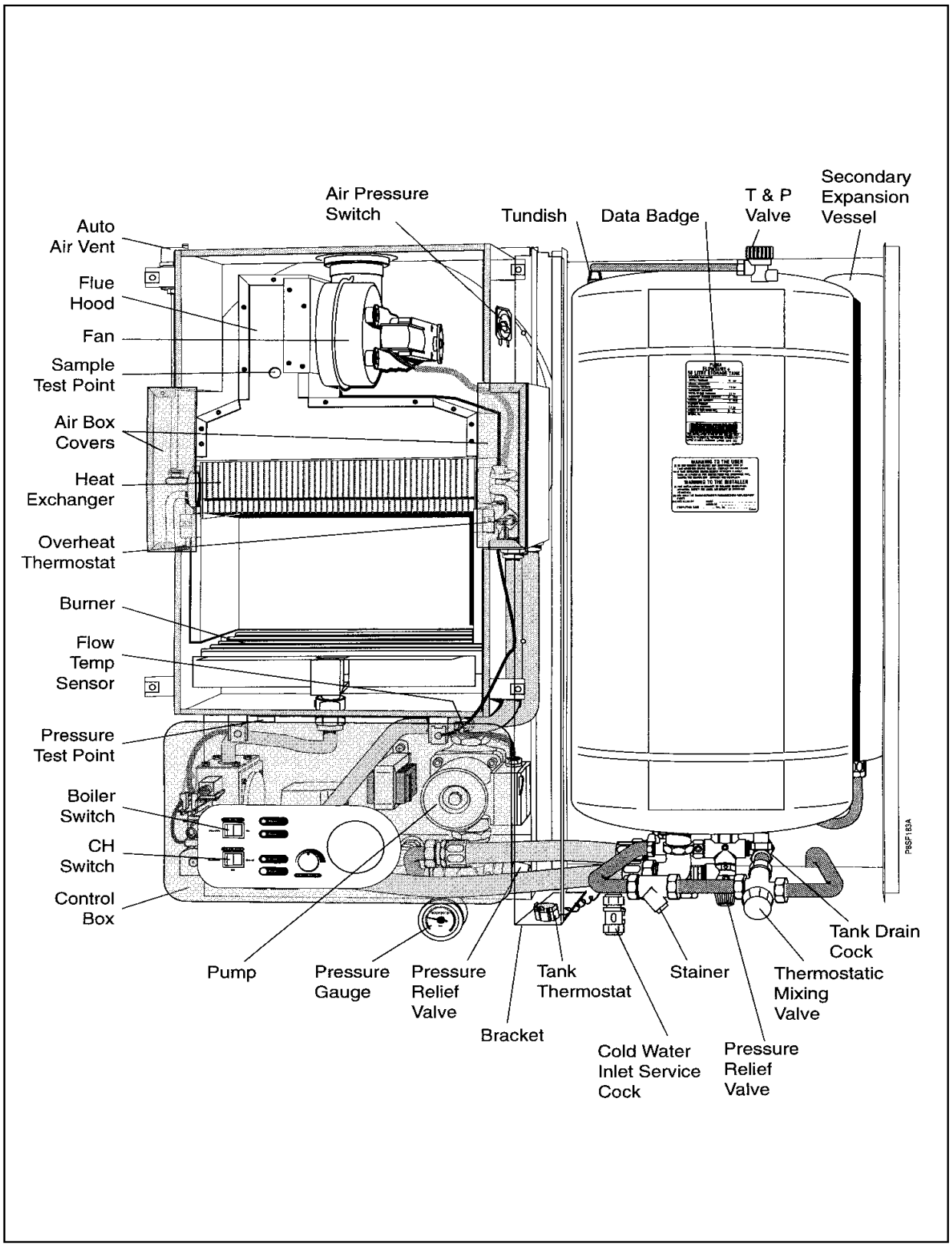
Auto Air Vent
Flue Hood
Fan
Sample Test Point
Air Box Covers
Heat Exchanger
Overheat Thermostat
Burner
Flow Temp Sensor
Pressure Test Point
Boiler Switch
CH Switch
Control Box
Air Pressure Switch
Tundish
Data Badge
T & P Valve
Secondary Expansion Vessel
Pump
Pressure Gauge
Pressure Relief Valve
Bracket
Tank Thermostat
Cold Water Inlet Service Cock
Stainer
Pressure Relief Valve
Thermostatic Mixing Valve
Tank Drain Cock
P8SF183A

# 1. Installation Requirements - Page 6

## 1.1 General Information

Prior to installation the boiler should be stored as directed on the carton and in a dry place. Both the user and the manufacturer rely heavily on the installer, whose job it is to install the combination boiler, and connect it to a correctly designed heating system. Acquaint yourself with the British Standards concerning installation requirements. If you need advice on any points, Potterton's Service Operations will be pleased to help (see back page). It is recommended that tools suitable for brass fittings are used, and have a capability to accommodate hexagon sizes up to 50mm.

## Codes Of Practice

I.E.E Regulations
Model Water Bye Laws
Building Regulations/Building Standards for Scotland.
Health and Safety Document No.635. (The Electricity at Work Regulations 1989)

| | |
|---|---|
| BS. 6891 | Installation of low pressure pipes. |
| BS. 6798 | Installation of gas boilers of rated input not exceeding 60kW. |
| BS. 5449 | Forced circulation hot water C.H. systems. Including smallbore and microbore domestic central heating systems. |
| BS. 5546 | Installation of gas hot water supplies for domestic purposes. |
| BS. 5440:1 | Flues (for gas appliances of rated input not exceeding 60 kW). |
| BS. 5440:2 | Air supply (for gas appliances of rated input not exceeding 60 kW). |
| BG. DM2 | Guide for gas installation in timber framed buildings. |

It is important that no external control devices e.g. flue dampers, economisers etc., be directly connected to this appliance unless covered by these Installation and Service instructions or otherwise recommended by Potterton in writing. If in doubt please enquire.

Any direct connection of a control device not recommended by Potterton could invalidate the certificate and the normal appliance warranty and could also infringe the Gas Safety Regulations.

Manufacturers instructions must not be taken in any way as over-riding statutory obligations.

## Gas Supply

The local Gas Region should be consulted, at the installation planning stage, in order to establish the availability of an adequate supply of gas.

An existing service pipe must NOT be used without prior consultation with the Local Gas Region.

A gas meter can only be connected by the Local Gas Region, or by a Local Gas Region Contractor.
An existing meter should be checked, preferably by the Gas Region, to ensure the meter is adequate to deal with the rate of gas supply required.

Installation pipes should be fitted in accordance with BS 6891.
Pipework from the meter to the combination boiler must be of an adequate size.

Do NOT use pipes of a smaller size than the combination boiler inlet gas connection (15mm).

The complete installation must be tested for gas soundness and purged as described in BS 6891.

## Health and Safety Information for the Installer and Service Engineer

Under the Consumer Protection Act 1987 and Section 6 of the Health and Safety at Work Act 1974, we are required to provide information on substances hazardous to health. Small quantities of adhesives and sealants used in the product are cured and present no known hazards.
The following substances are also present.

**Insulation and Seals**

**Material** - Ceramic Fibre. Alumino - Silicone Fibre.
**Description** - Boards, Ropes, Gaskets.

**Known Hazards** - Some people can suffer reddening and itching of the skin. Fibre entry into the eye will cause foreign body irritation. Irritation to respiratory tract.
**Precautions** - People with a history of skin complaints may be particularly susceptible to irritation. High dust levels are only likely to arise following **harsh** abrasion.
In general, normal handling and use will not present discomfort, follow good hygiene practices, wash hands before consuming food, drinking or using the toilet.
**First Aid** - Medical attention must be sought following eye contact or prolonged reddening of the skin.

**Heat Exchanger**

**Material** - Copper with lead/tin coating.
**Description** - Finned copper tube.

**Known Hazards** - Inhalation or ingestion of lead dust or fumes may cause headache and nausea.
**Precautions** - Unused heat exchangers present minimal risk to health other than normal hygiene practices would demand regarding washing before eating etc. Deposits found on or below a heat exchanger that has been in use could contain lead oxide. Avoid inhalation by using a vacuum cleaner in conjunction with other cleaning tools when servicing the appliance.

spares & parts online IBASIS.CO.UK©

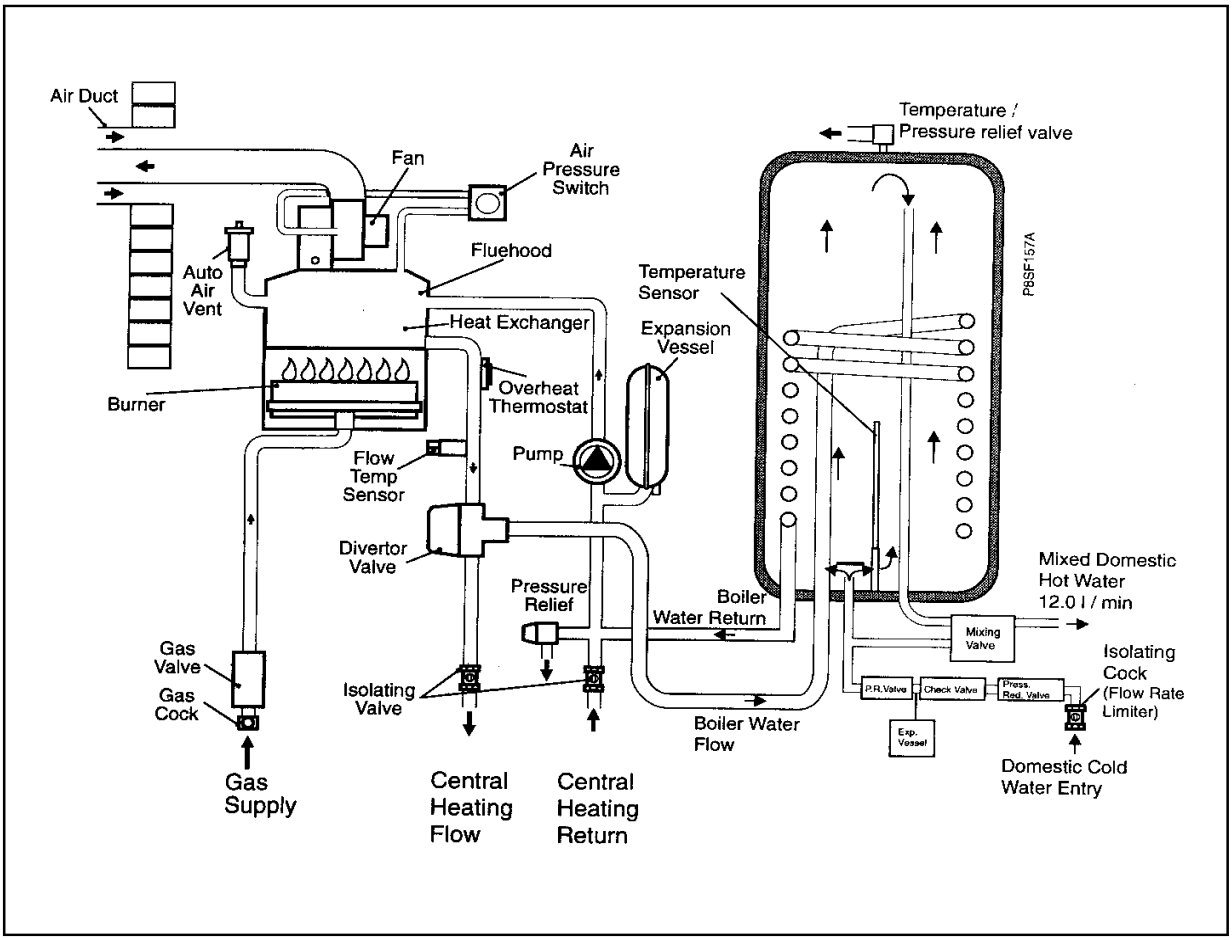


Fig 2

## 1.2 Location Of Boiler

In siting the combination boiler, the following limitations MUST be observed:

a) The position selected for installation should be within the building, unless otherwise protected by a suitable enclosure. It must allow adequate space for installation, servicing and air circulation around the appliance.

b) This position MUST also allow the chosen flue termination to be made correctly. The boiler must be installed on a flat vertical wall which is capable of supporting the weight of the appliance and any ancillary equipment.

The appliance may be installed on a combustible wall, subject to the requirements of the Local Authorities and Building Regulations.

### IMPORTANT NOTICE

If the combination boiler is to be fitted in a timber framed building it should be fitted in accordance with the British Gas publication 'Guide for Gas Installations in Timber Frame Housing'. (Reference DM2).

If in doubt advice must be sought from the Local Gas Region of British Gas.

The combination boiler may be installed in any room or internal space, although particular attention is drawn to the requirements of the current I.E.E. Wiring Regulations, and in Scotland, the electrical provisions of the Building Regulations applicable in Scotland, with respect to the installation of the combination boiler in a room or internal space containing a bath or shower.

Where a room-sealed appliance is installed in a room containing a bath or shower, any electrical switch or appliance control, utilising mains electricity should be so situated that it cannot be touched by a person using the bath or shower.

A compartment used to enclose the combination boiler MUST be designed and constructed specifically for this purpose. An existing cupboard, or compartment, may be used provided it is modified accordingly. See Section 1.4 Air Supply.

Where installation will be in an unusual location, special procedures may be necessary. BS 6798 gives detailed guidance on this aspect.

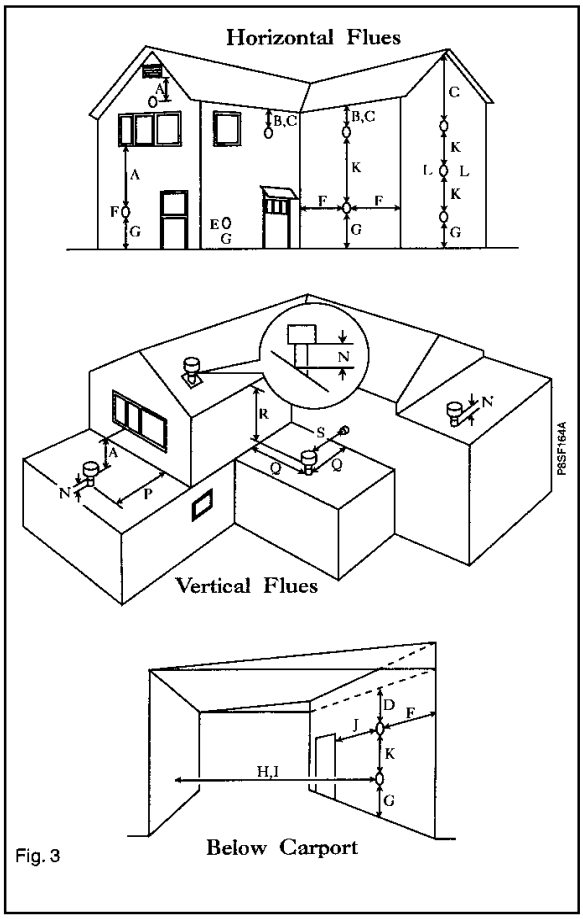


Fig. 3

| POSITION | MIN. DISTANCE mm | |
|---|---|---|
| A | DIRECTLY BELOW AN OPENABLE WINDOW, AIR VENT, OR ANY OTHER VENTILATION OPENING | 300 |
| B | BELOW GUTTER, DRAIN/SOIL PIPE | 75 |
| C | BELOW EAVES | 200 |
| D | BELOW A BALCONY/CARPORT ROOF | 200 |
| E | FROM VERTICAL DRAIN PIPES AND SOIL PIPES | 75 |
| F | FROM INTERNAL OR EXTERNAL CORNERS | 300 |
| G | ABOVE ADJACENT GROUND OR BALCONY LEVEL | 300 |
| H | FROM A SURFACE FACING THE TERMINAL | 600 |
| I | FACING TERMINALS | 1,200 |
| J | FROM OPENING (DOOR/WINDOW) IN CARPORT INTO DWELLING | 1,200 |
| K | VERTICALLY FROM A TERMINAL ON THE SAME WALL | 1,500 |
| L | HORIZONTALLY FROM A TERMINAL ON THE SAME WALL | 300 |
| M | ADJACENT TO OPENING | 300 |
| N | ABOVE ROOF LEVEL (TO BASE OF TERMINAL) | 300 |
| P | FROM ADJACENT WALL TO FLUE | 210 |
| Q | FROM INTERNAL CORNER TO FLUE | 230 |
| R | BELOW EAVES OR BALCONY | 600 |
| S | FROM FACING TERMINAL | 1,200 |

## 1.3 Flue Terminal and Ducting (Fig: 3 - a, b & c)

The **standard horizontal** flue system (Potterton Part No.31-19619) is suitable for installations up to 1092mm, measured from the centre line of the boiler outlet to the outside face of the wall. The wall liner enclosed will accommodate thicknesses of 400mm and can be cut to a minimum length of 76mm.

**One metre flue extension** kits (Part No. B4286 or 31-19033) are available to extend horizontal flues to a maximum length of 3078mm.

**90° In-line** elbow kits (Part No. 31-19034) and **135° In-line Bend** kits (Part No. 31-19035) are also available for more flexible siting. Horizontal flues can be set at 45° angles to the combination boiler, through 360°, to the miniature terminal on the outside of the building. The siting positions for horizontal flue terminals are shown in Figs. 3. - a) & b).

A **Concentric Vertical flue** system is available (Part No.31-19036) which when used in conjunction with **One metre flue extension** kits (Part No. 31-19033) is suitable flue heights up to 3 metres to terminate through a roof.

A **Twin tube Vertical flue** system is also available for flue heights up to 8025 mm (Part No. 31-19037) when used in conjunction with **one metre twin tube extension** kits (Part No. 31-19038).

A **Pitched Roof Flashing** kit (Part No. 31/19041) and **Flat Roof Flashing** kit (Part No. 31/19040) are available for use with the vertical flue systems.

**135° Off-set** kits are available for both types (Part No.31-19035 concentric) and (Part No.31-19039 twin tube). The siting of the flue terminal through a roof is shown in Fig 3. - c). Only the above flue systems should be used with Puma Flowsure+ storage combination boilers.

If a horizontal flue is sited less than 2m above a balcony, above ground, or above a flat roof to which people have access, a suitable terminal guard must be fitted. This serves two purposes, to protect the terminal against damage or interference and to protect passers-by. A terminal guard is available (Part No. 929729).

**Note**: Where a flue terminal is installed less than 1 metre from a plastic, or painted gutter, or 500mm from painted eaves, an aluminium shield 1 metre long, should be fitted to the underside of the gutter or painted surface. A suitable wall plate should be fitted to the painted wall surface of a mobile home.

**IMPORTANT:** It is absolutely ESSENTIAL, to ensure that products of combustion discharging from the terminal cannot re-enter the building, or any other adjacent building, through ventilators, windows, doors, natural air infiltration, or forced ventilation/air conditioning. If products of combustion are found to be re-entering any building, the appliance MUST be turned OFF IMMEDIATELY.

## 1.4 Air Supply (See Table 2)

Detailed recommendations for air supply are given in BS 5440:2. The following notes are intended for general guidance: It is not necessary to have a purpose provided air vent in the room or internal space in which the combination boiler is installed. If the combination boiler is to be installed in a cupboard or compartment, permanent air vents are required (for cooling purposes) in the cupboard/compartment, at both high and low levels. The air vents must either communicate with a room/or be direct to outside air.

| Position of Air Vent | Air from Room/ Internal Space | Air Direct from Outside |
|---|---|---|
| High Level | 264 $cm^2$ 40 $in^2$ | 132 $cm^2$ 20 $in^2$ |
| Low Level | 264 $cm^2$ 40 $in^2$ | 132 $cm^2$ 20 $in^2$ |

Table 2. Air Supply

## 1.5 Guide to System Requirements (Figs. 4 & 6)

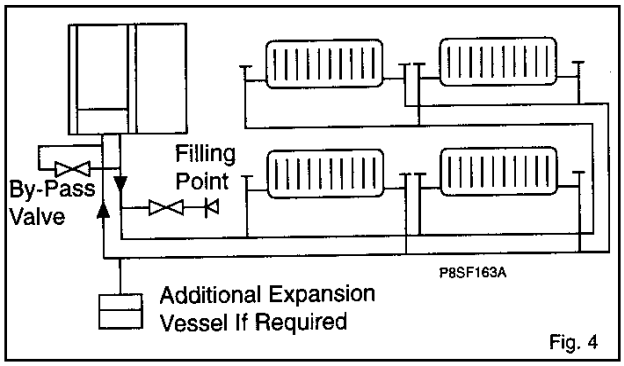


Fig. 4

These combination boilers are specifically designed for **sealed systems** only. Therefore the central heating system should be in accordance with the relevant recommendations given in BS 6798 and also, smallbore and microbore systems BS 5449 Part 1.

**For correct operation the boilers require a by-pass.** A valved by-pass should be fitted and the flow reduced to balance the system correctly. The length of the by-pass pipework is not important.

**Note:** If the by-pass flow is reduced too much this will cause the appliances to overheat and go to lockout.

The installation should be designed to work with flow temperatures of up to 90° C. All components of the system must be suitable for a maximum pressure of 3 bar (45 psi) and a temperature of 110° C.

The following components are incorporated within the boiler.

a) Circulating pump.
b) Diverter valve.
c) Pressure Relief valve with a non-adjustable pre-set lift pressure of 3 bar (45 psi).
d) Pressure gauge covering the range 0-4 bar (0-60 psi).
e) 10 litre expansion vessel with initial charge pressure of 1.0 bar (14 psi).

The domestic hot water system must be in accordance with the relevant recommendations of BS 5546. Copper tubing to BS 2871:1 is recommended for water carrying pipework and MUST be used for pipework carrying potable water. All capillary joints in the D.H.W pipework must be joined with a lead free solder.

Ancillary pipework, not forming part of the useful heating surface, should be lagged to prevent heat loss and any possible freezing, particularly where pipes run through roof spaces and ventilated under-floor spaces.

If the capacity of the central heating system should exceed 100 litres, an additional vessel should be installed on the return to the combination boiler from the heating system (Fig. 4). Guidance on vessel sizing is given in Table 3.

To allow the maximum central heating expansion capacity in the boiler the pre-charge pressure in the central heating expansion vessel must be marginally greater than the initial (cold) system pressure at the appliance (as shown on the appliance pressure gauge).

Draining taps should be at least 1/2 in BSP nominal size and be in accordance with BS 2879.

| Safety Valve Setting (bar) | 3.0 | |
|---|---|---|
| Initial System Pressure (bar) | 1.0 | 1.5 |
| Total Water Content of System | **VESSEL VOLUME (L)** | |
| litres | litres | litres |
| 25 | 2.7 | 3.9 |
| 50 | 5.4 | 7.8 |
| 75 | 8.2 | 11.7 |
| 100 | 10.9 | 15.6 |
| 125 | 13.6 | 19.5 |
| 150 | 16.3 | 23.4 |
| 175 | 19.1 | 27.3 |
| 200 | 21.8 | 31.2 |
| 225 | 24.5 | 35.1 |
| 250 | 27.2 | 39.0 |
| 275 | 30.0 | 42.9 |
| 300 | 32.7 | 46.8 |
| 325 | 35.7 | 50.7 |
| 350 | 38.1 | 54.6 |
| 375 | 40.9 | 58.5 |
| 400 | 43.6 | 62.4 |
| 425 | 46.3 | 66.3 |
| 450 | 49.0 | 70.2 |
| 475 | 51.8 | 74.1 |
| 500 | 54.5 | 78.0 |
| For system volumes other than those given above, multiply the system volume by the factor across | 0.109 | 0.156 |

Table 3. Expansion Vessel Requirements

Deduct from the value given in the table the 10 litre expansion vessel supplied.

### External Controls

To obtain economical use of the appliance it is advisable to fit external controls. The controls can take the form of:-

a) Time clock (two internal options are available
Part No. 31-19053 - Electro-mechanical)
Part No. 31-19054 - Electronic).
b) Room thermostat
c) Thermostatic radiator valves (TRV's)
d) Zone valves

A combination of these controls will produce economical and effective use of the heat generated by the boiler. It is advisable to control the temperature of the main living area with a room thermostat and other areas by TRV's.

**Frost Protection**

The tank of hot water will provide frost protection. This is purely for the protection of the appliance. If any other part of the central heating system requires frost protection, an external frost thermostat must be fitted in the usual manner, refer to Fig. 9 for wiring.

## 1.6 Mains Water Feed: Central Heating

A connection must be incorporated into the central heating system to facilitate filling. There must be no direct connection to the mains water supply, even through a non-return valve, without the approval of the Local Water Authority.

**PERMISSIBLE METHODS OF FILLING**

**Note:** The Puma combination boiler range is fitted with a diverter valve design which has a manual operation lever to aid filling. To ease filling of the pump manifold an air bleed valve is fitted to the diverter and must be opened during filling until water flows out. The valve should then be closed. See Fig.13.

**(1) DIRECT METHOD** (Fig. 5)

A detachable flexible hose is connected to a stop valve fitted to an outlet on the service main. The other end of the hose is connected to a second stop valve and a double check valve. The double check valve is fitted to an inlet connection on the central heating return pipe under the appliance. The hose should be disconnected after filling. Where the mains pressure is excessive a pressure reducing

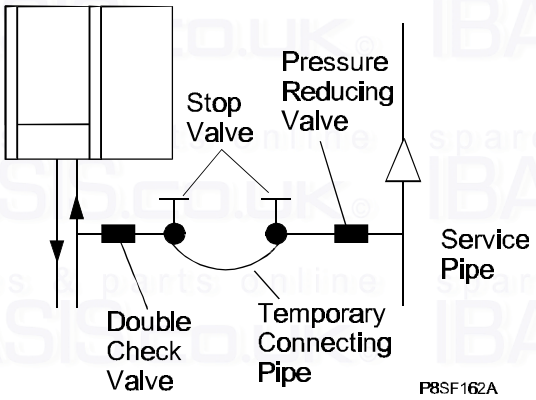


valve shall be used to make filling easier. The following fittings shall form a permanent part of the system and shall be fitted in the order stated.

a) A stop valve complying with the requirements of BS 1010 Part 2, (the temporary hose from the draw off tap shall be connected to this fitting).
b) Double check valve of an accepted type.

**(2) BOOSTER PUMP METHOD**

The system may be filled through a self contained unit comprising a cistern, pressure booster pump and if necessary, an automatic pressure-reducing valve or flow restrictor.

The pressure booster pump must be capable of pressurising the system to a minimum of 1.0 bar (14 p.s.i.) measured at the appliance.

The cistern should be supplied through a temporary connection from a service pipe or cold water distributing pipe. The unit may remain permanently connected to the heating system to provide limited water make-up.

**Provisions for make up water**

Provision should be made for replacing water loss from the system by re-pressurisation of the system. See section on Permissible Methods of Filling.

Reference should be made to British Gas Publications "Material and Installation Specifications for Domestic Central Heating and Hot Water".

## 1.7 Installation to an Existing Central Heating System

The boilers are designed to operate on a sealed system only, therefore if the existing system is of the open type it will have to be modified to comply with BS 6798.

Before installing a new combination boiler to an existing system flush out the old system with a recommended descaling/flushing agent at least twice.

Also check pipework and renew any corroded pipework or fittings. Valve glands must be re-packed or replaced wherever necessary and any defective controls replaced.

## 1.8 Hard Water Areas

If the area of installation is recognised as a hard water area, (above 200 p.p.m.) it is essential that a suitable water treatment device of an electronic, magnetic or galvanic type be installed in the mains water supply.

To assess water hardness, immerse the test strip supplied, for about one second in a water sample (NOT IN RUNNING WATER) so as to moisten all the zones.

Inspect the strip after 1-2 minutes, check the zones, if two or more zones have changed colour the hardness of the water is above 200 p.p.m. and a water treatment device will be required.

## 1.9 Pump Performance Curve

The circulating pump fitted within the appliance should be capable of satisfying most system requirements. Fig. 6 indicates the amount of pump head available for the system. The boiler resistance is already taken into account in this curve.

spares & parts online IBASIS.co.uk

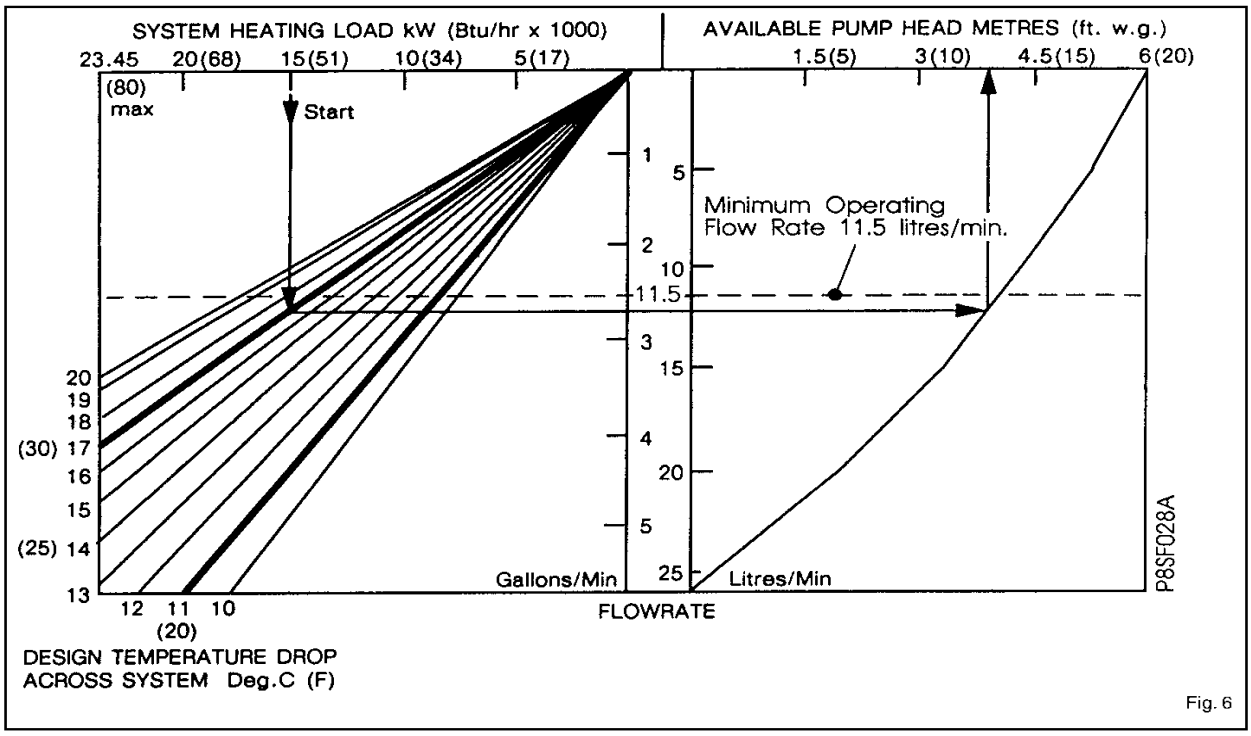

Fig. 6

**HOW TO USE FIG. 6.**

Starting with the required SYSTEM HEATING LOAD, draw a vertical line downwards so that it intersects the chosen SYSTEM DESIGN TEMPERATURE DROP line, normally this would be 11°C (20°F) although up to 17°C (30°F) can be used without increasing radiator sizes. From this intersection point draw a horizontal line so that it intersects the PUMP CURVE. From this intersection draw a vertical line upwards.

The AVAILABLE PUMP HEAD can now be read from the horizontal scale, and the corresponding FLOW RATE from the vertical scale in the centre of the chart.

The system must be designed so that its hydraulic resistance does not exceed the available head unless an additional circulating pump is fitted. More available head can be achieved by choosing a greater temperature difference.

If the designed flow rate through the boiler is less than 11.5 l/min, the boiler could be noisy and ultimately overheat. See note on system by-pass in Section 1.5.

**Central Heating Range Rate.**

For most installations the boiler will automatically adjust the central heating output to match your heating system requirement.

Systems which have very low water content and a low heating requirement may benefit by reducing the maximum boiler output. This is achieved by rotation of the range rate adjuster, located on the electronic modulation control board (see Fig. 26).

The boiler central heating output can be adjusted between the maximum and minimum values stated on the data badge. Operation of this adjuster will not affect the maximum boiler output when domestic hot water is being drawn off.

## 1.10 Domestic Hot Water - 50 Litre Tank

The 50 litre tank is a secondary store which is designed to be kept heated to meet instantaneous hot water demands that require intermittently higher flow rates.

At a flow rate of approximately 12 litres/min, hot water will be delivered for around 4 minutes at a 50°C rise reducing thereafter. The tank will fully recover after a few minutes to again deliver 12 litres/min at a 50°C rise.

Domestic hot water always takes priority over central heating.

If domestic hot water is drawn off while the central heating is operating the boiler will automatically transfer the boiler output to the domestic hot water supply.

A secondary water expansion vessel is supplied with the tank and must be connected to the appropriate tapping on the controls assembly.

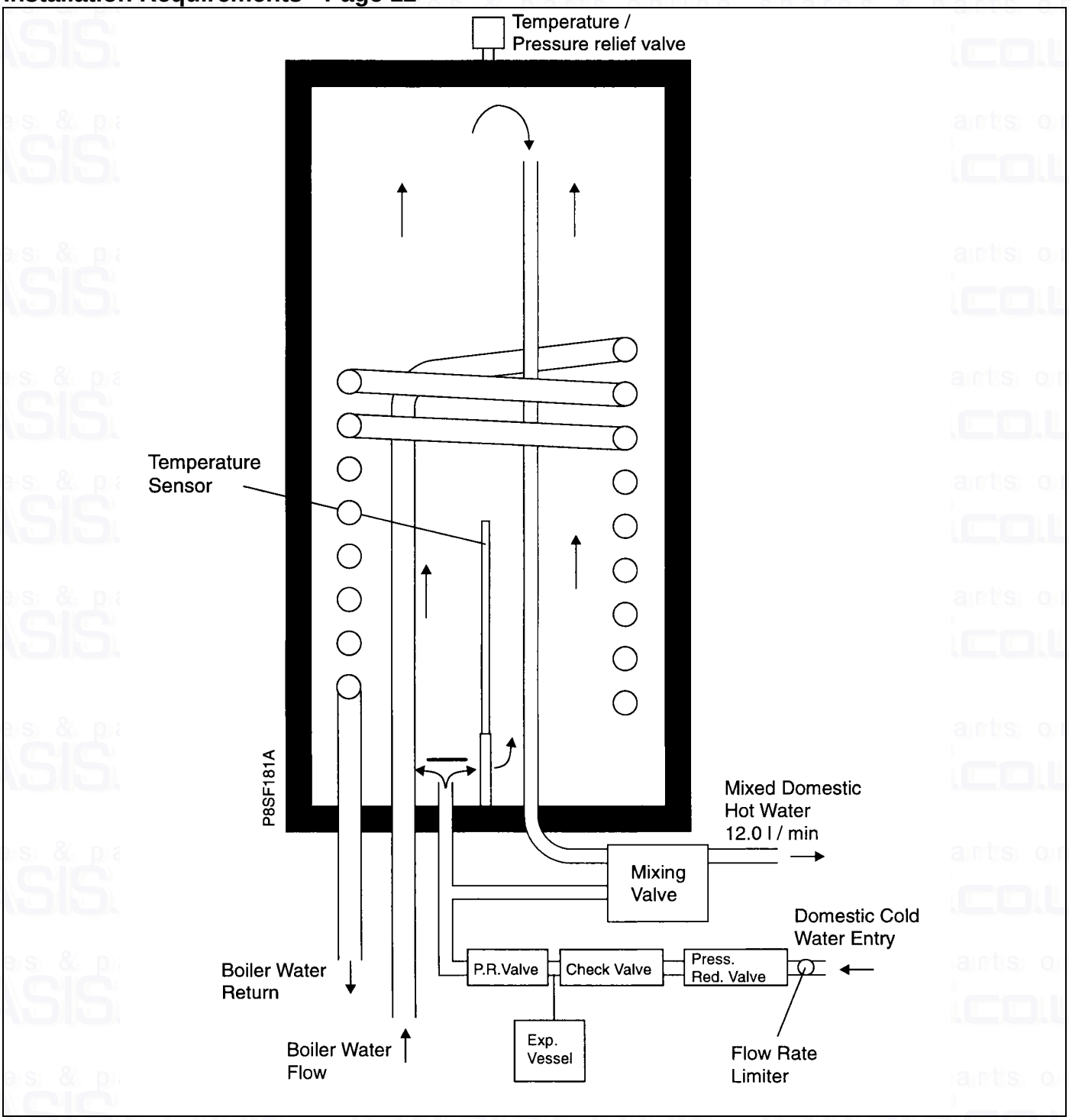


**IMPORTANT**
No Valves should be fitted between the expansion vessel and the storage cylinder.

**DHW Store Temperature**

Water is stored in the tank at approximately 73°C. To ensure a safe delivery temperature a thermostatic mixing valve is fitted in the hot water outlet and should be adjusted to produce a hot water delivery temperature of 60°C.

## 1.11 Electrical Supply

(See Fig. 8 & 9)

Wiring external to the appliance MUST be in accordance with the current I.E.E. Regulations for Electrical Installations, and any Local Regulations which apply. The combination boiler is supplied for 230 Volts ~ 50 Hz, Single Phase. **To protect the appliance it is essential that the electrical supply is fused at 3 A rating.**

THIS APPLIANCE MUST BE EARTHED The method of connection to the mains electricity supply must provide means of completely isolating the electrical supply to the combination boiler and its ancillary controls. The appliance is designed to be the wiring centre for the installation, therefore no additional live supplies are required from either timers or room thermostats.

Isolation is preferably by the use of a fused three-pin plug and unswitched shuttered socket-outlet, both complying with the requirements of BS 1363. (See Fig. 8), OR a **3 A fused** double-pole switch, having a 3mm contact separation on both poles can be used. See Fig. 9. It is important that the point of connection to the mains should be readily accessible and adjacent to the combination boiler.

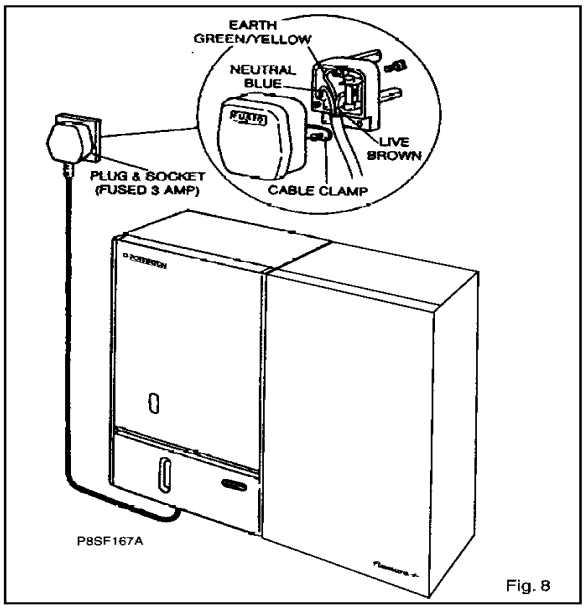

Fig. 8

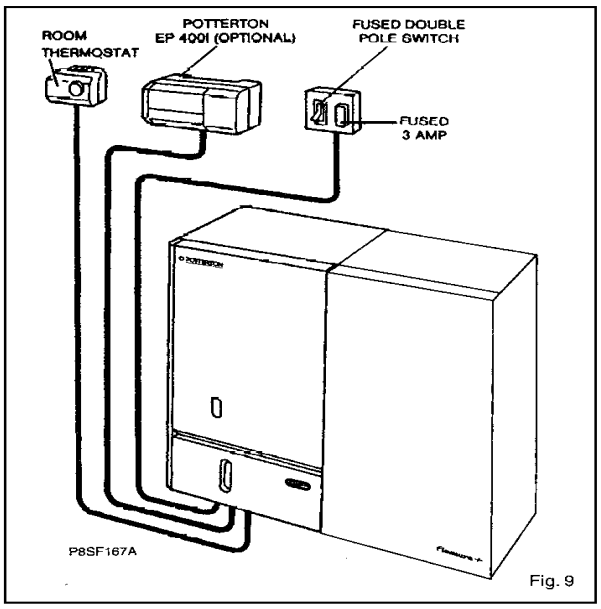

Fig. 9

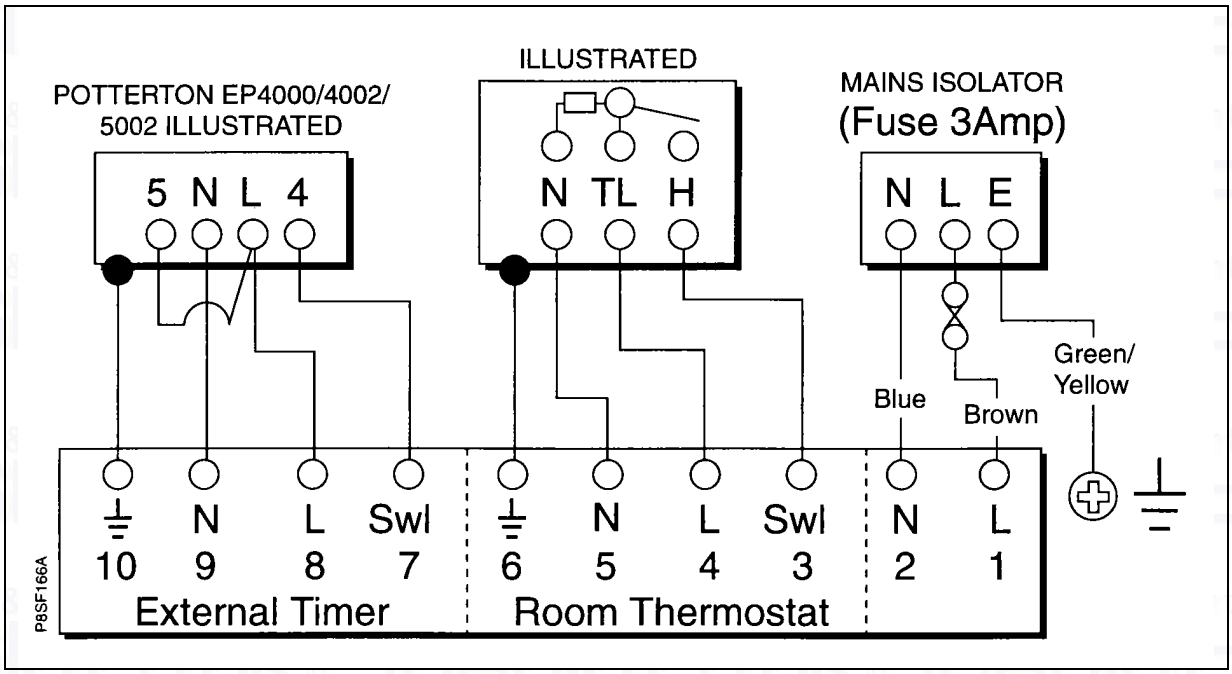

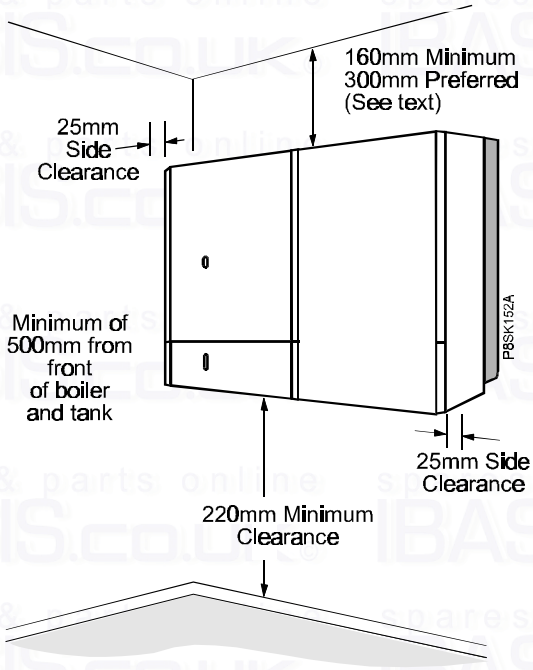


## 1.12 Clearances around the Appliance.

(See Fig.11)

**Side Clearance:**
The position selected for the complete appliance must provide the following minimum clearance which is necessary for operation and servicing, 25mm each side of the unit (left hand side clearance has been incorporated into template).

**Top Clearance:**
The top clearance should be a minimum of 160mm, but 300mm is preferred to allow removal of the central heating expansion vessel, without removing the appliance from the wall, if replacement is required.

**Bottom Clearance:**
A bottom clearance of 220mm is required between the appliance and any surface.

**Frontal Clearance:**
A minimum of 500mm is required in front of the appliance for access during servicing, the front clearance can be reduced providing the door/cover can be removed to expose the entire case front.

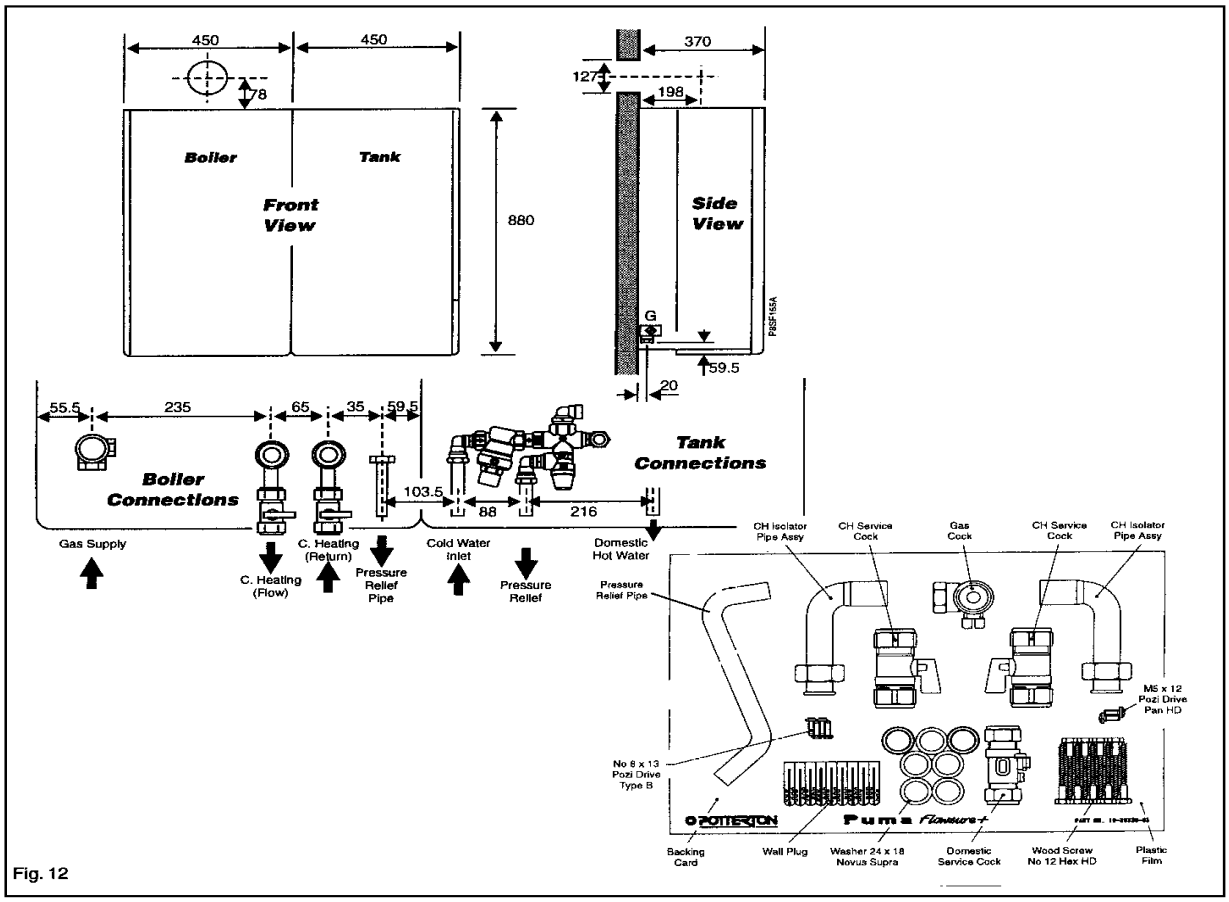

Fig. 12

# 2. Installation - Page 15

It is **MOST IMPORTANT** that the appliance is installed in a **VERTICAL POSITION**, with the flue system passing through the wall or ceiling in a **Horizontal** or **Vertical** plane. A minor deviation from the horizontal is acceptable, provided that this results in a downward slope of the flue system away from the combination boiler.

## 2.1 Unpacking

The appliance will arrive on site in three separate cardboard cartons. Unpack the cartons and check the contents against the contents lists.

**(1) The Boiler**

**(2) The Flue System.**

There is a range of horizontal and vertical flue systems and optional packs (i.e. extensions / in-line bends etc.) to suit your requirements which are supplied separately from the boiler and include Installation Instructions - See Page 8.

**(3) The Tank**

## 2.2 Installation - Boiler

**Caution**
**Some residual water may still be in the heat exchanger and pipework.**

a) Remove the white front case as follows; undo the two securing screws at the base of the panel, pull the base of the panel forward approx. 50mm and lift off the supporting top hooks. (See Fig. 13)

b) Remove the base cover by removing the two fixing screws and push the cover towards the rear to release

c) Each side panel can now be individually removed by removing the two front fixing screws, loosening the lower rear fixing screw and sliding the panel upwards to unhook from the upper rear fixing. Place each panel and screws safely to one side. The lower rear fixing screw from the right hand side will have to be removed completely before the side panel can be removed.

d) Position the appliance onto its side and remove the four screws retaining the lowest rear cross brace. This brace is for transit purposes only and should be discarded. Remove all plastic plugs from the pipes.

e) **Connections:** All connections for the boiler & tank are supplied on the Fittings Card or in the box containing the water inlet controls assembly. Remove the fittings for the boiler and assemble to the appliance. See Fig. 12.

**Note:** When fitted, the Red levered central heating tail (C.H.flow) should be to the left of the Blue.

f) Tape the wall fixing template to the wall in the selected appliance position. Allow an extra 475mm from the right hand edge of the template for the tank (including clearances).

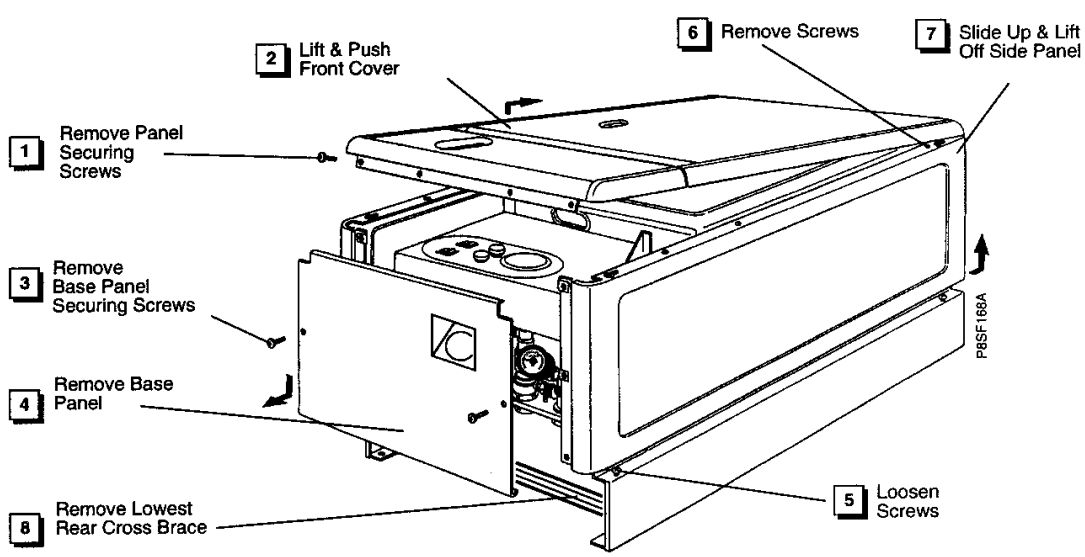


Fig. 13

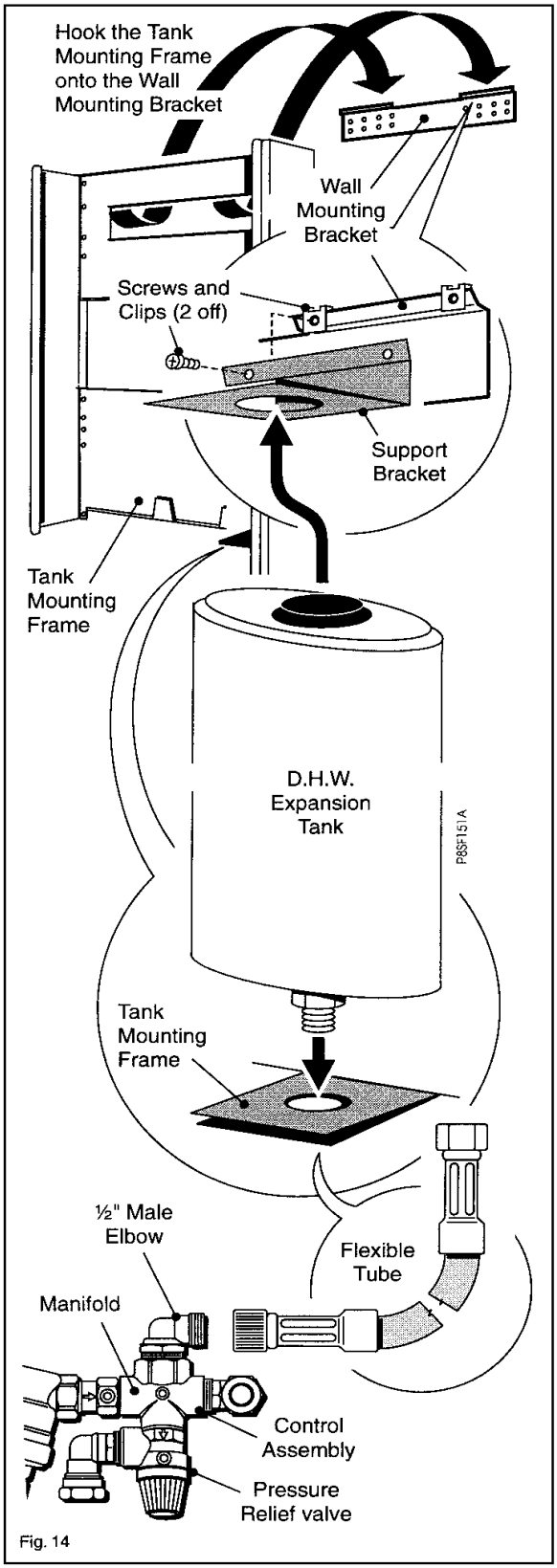

Fig. 14

g) Mark out the position of the flue outlet and the three boiler mounting holes.

h) Offer the mounting bracket assembly up to the template and mark two hole positions for the tank bracket. Remove the assembly and put to one side.

j) At this point follow the Installation Instructions supplied with the Flue System for the installation of the ***flue only***, then proceed as follows:-

k) Drill the five previously marked boiler mounting holes using a 7mm diameter drill to a depth of 50mm. Insert the plastic wall plugs provided on the boiler Fittings Card.

l) Attach both the boiler and tank mounting brackets to the wall using screws from the Fittings Card. The tank bracket is the one with the two clips over the holes on the right hand side.

m) Lift the boiler (with the white casing front, base and side panels removed) into position using a substantial part of the boiler chassis.

**WARNING:** DO NOT lift the boiler by the control panel or other unsubstantial structure as this may result in damage to the appliance. DO NOT pivot the appliance onto its base as damage may occur to the underside.

n) Align the boiler with the bottom fixing hole and secure using a screw from the Fittings Card.

## 2.3 Installation - Storage Tank

a) Connect the water controls inlet assembly to the base of the tank. See Fig. 15.

b) Connect the domestic service cock from the Fittings Card to the cold water inlet (pressure reducing valve) on the tank.

c) Hang the tank mounting frame over the mounting bracket and position centrally. If required, additional fixing holes are provided in the tank mounting frame and an additional four plugs and screws are supplied in the fittings pack.

d) Position the expansion vessel as shown and connect the flexible tube.

e) Put the expansion vessel in place and attach the expansion tank support bracket to the tank mounting frame using two screws from the Fittings Card.

f) Hang the storage tank onto the tank mounting frame.

g) Connect the expansion vessel flexible tube to the storage tank.

h) Attach a ¾ to 22mm compression fitting to the tundish and run a relief pipe down the back of the mounting

frame as shown. See Fig. 15.

j) Connect the tundish assembly to the temperature & pressure valve as shown in Fig. 15. The tundish must be left visible to the consumer once installed and must not come into contact with any electrical components. Connect the pipe supplied to the temperature & pressure relief valve and the tundish.

k) Remove the two top securing screws and lower the control box assembly. Fit the flexible hoses from the boiler to the tank (ensure that the fibre washers supplied on the Fittings Pack are used), run the hoses above the pressure gauge and make them as smooth as possible.

Remove the blanking plate from the diverter valve outlet, retain the 'O' ring.

Remove the blanking plug from the pump inlet manifold, discard the fibre washer.

Fit the flow pipe assembly to the diverter valve outlet using the retained 'O' ring.

Fit the return pipe assembly to the pump inlet manifold. Use a new fibre washer from the fittings card.

l) Take the side casing bracket assembly from the storage kit and fit the thermostat using the two M4 screws provided in the Fittings Pack. Secure the bracket assembly in place using the two self tapping screws (from the boiler side panel) for the upright portion. Remove the two M5 screws from the Fittings Pack and secure the casing bracket to the L-shaped bracket on the lower right hand side of the boiler. See Fig. 23.

## 2.4 Gas Connection

A minimum gas pressure of 20 mbar (8" w.g.) must be available at the combination boiler inlet at full flow rate, (see Technical Data).

Install a gas supply pipe not less than 15mm diameter copper to the combination boiler and connect to the gas service cock.

## 2.5 D.H.W. Supply

a) Flush out all foreign matter from the supply pipe before connecting to the appliance.

b) Connect the cold water supply to the 15mm isolating cock.

Connect the hot water outlet pipe using a 15mm compression fitting.

**Note:** The Cold Water Supply Isolating Cock incorporates an automatic flow limiting device.

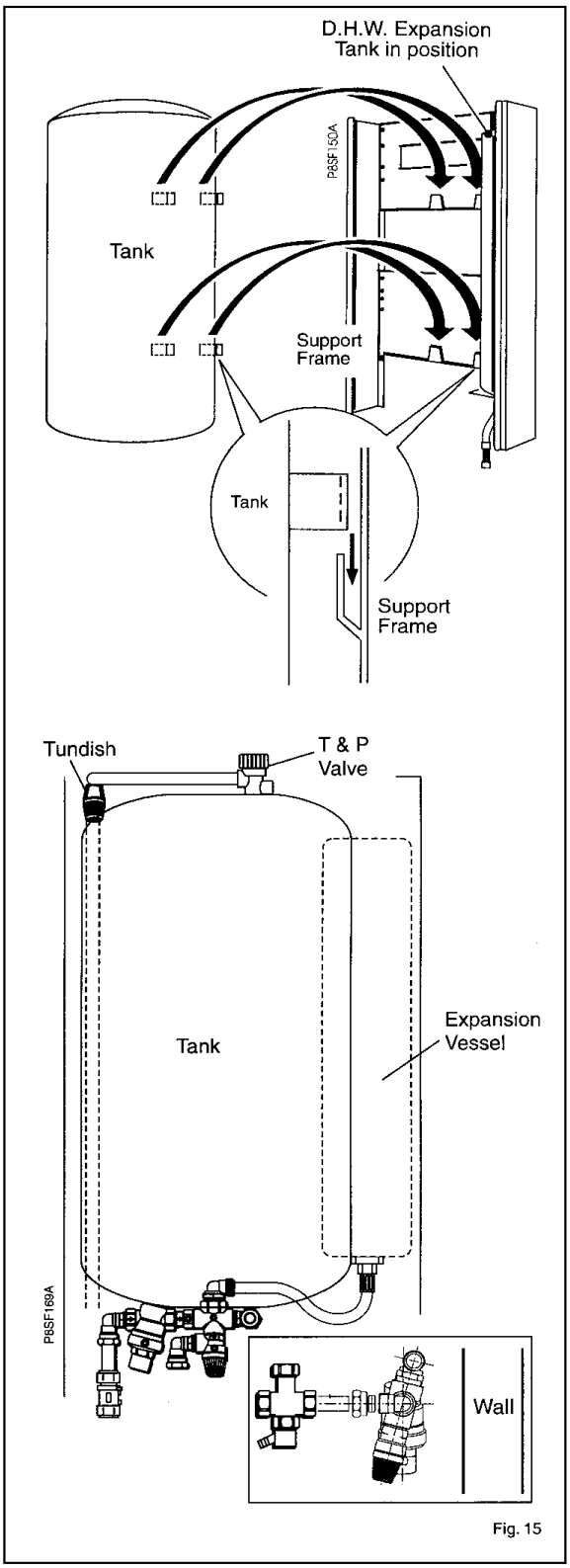

Fig. 15

**Showers**: If a shower control is to be supplied from the Combination unit it should be of the type which incorporates a pressure balancing valve (e.g. MIRA 415 EQUAMATIC).

If the shower control is existing and is of a mechanical type, it may be necessary to fit a drop tight pressure reducing valve to the mains supply. Refer to the Shower Manufacturers instructions.

**Note:** Showers with a loose flexible hose may require the fitting of a double check valve, to comply with water Bye-law 17.

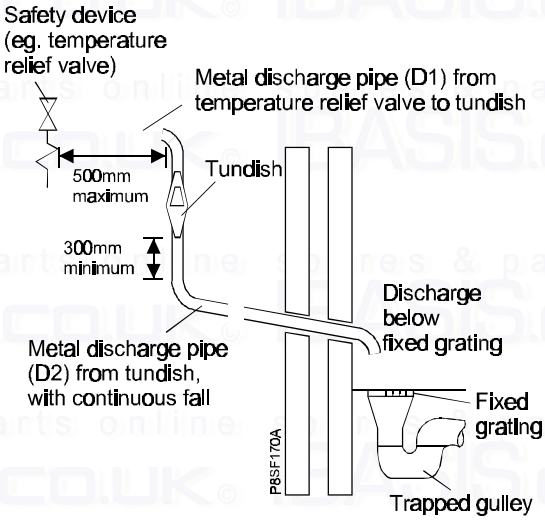


## 2.6 C.H. Water Connections

a) Before any central heating connections are made to the combination boiler, all system valves should be opened and the system thoroughly flushed out with cold water.

b) Connect the central heating return pipe to the isolating cock identified by a Blue lever. (right hand of the two pipes)

c) Connect the central heating flow pipe to the isolating cock identified by a Red lever. (left hand of the two pipes).

## 2.7 Pressure Relief Valves

The pressure relief valve on the boiler is pre-set at 3 bar.

The pressure relief valve on the tank controls is pre-set at 6 bar.

IT MUST NOT DISCHARGE ABOVE AN ENTRANCE, OR WINDOW, OR ANY TYPE OF PUBLIC ACCESS.
THE INSTALLER MUST CONSIDER THAT THE OVERFLOW COULD DISCHARGE BOILING WATER.

**Sizing of Copper Discharge Pipe**

| Min. size of discharge pipe (D1) | Min. size of discharge pipe (D2) from tundish | Max. resistance allowed, expressed as a length of straight pipe no elbows or bends | Resistance created by each elbow or bend |
|---|---|---|---|
| 15mm | 22mm | up to 9m | 0.8m |
| | 28mm | up to 18m | 1.0m |
| | 35mm | up to 27m | 1.4m |

Install a pressure relief valve discharge pipe to the boiler and tank valves, not less than 15 mm diameter and connect to the pressure relief outlet connection using a 15mm Compression fitting.

The pipe run should be as short as possible, run continuously downwards and discharge to the outside of the building, where possible over a drain.

The pipe end should be directed towards the wall. (see Fig. 18) The discharge point must be such that it will not be hazardous to occupants or cause damage to external electrical components or wiring.

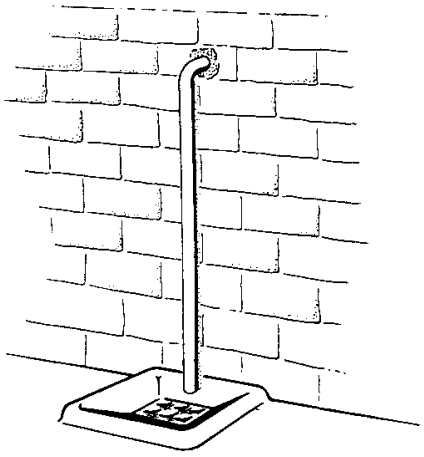

Fig. 17

## 2.8 Wiring the Appliance

The internal wiring of the appliance is shown in Figs. 36 & 37. The wiring diagram is also on the inside of the front casing panel.

a) Undo the two retaining screws securing the controls panel and allow the panel to swing down.

b) Using PVC insulated cable of not less than 0.75 mm² (24/0.2mm to BS 6500 Table 16) thread the cable through the wiring clamps and into the electronics enclosure. Pull up the controls box and re-fit the two screws, remove the other two screws and allow the door of the control box to open. Wire up the panel referring to the termination label - See Fig. 18.

**Note:** Ensure that all cables pass through the wiring panel bush/s and are securely fixed by the cable clamps.

If a room thermostat is to be fitted, remove the White link wire between terminals 3 and 4 and discard prior to wiring in the thermostat. If no room thermostat is to be fitted retain link wire.

If a programmable room thermostat is to be used it must be fitted in place of the external timer and the link between 3 & 4 retained.

If the installation does not have an internal or external timer, the central heating switch on the front of the appliance must be set to Constant during periods when central heating is required.

If using an internal timer, connect the timer's lead to PL11 on the modulation control board. (see Fig. 28)
If an external frost thermostat is required it should be connected to terminals 3 and 8. For the frost thermostat to function the boiler switch must be set to 'On'.

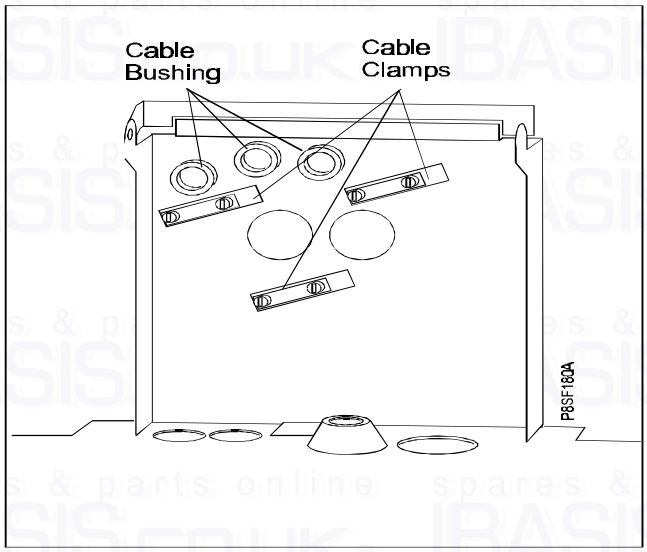


c) Connect the thermostat harness to terminals 1 and 3 of the thermostat. Spread heat sink compound onto the thermostat sensing bulb and insert it into the bottom of the tank.

d) Ensure the link terminal is connected to the wiring harness. This will ensure that the boiler can be commissioned in CH mode. (The boiler should have been despatched from the factory with the link terminal in place).

**Note**: The electrical mains supply must be fused at 3 A, and the connection must be made to the wiring panel in such a way that should the lead disengage from the cable clamp, the current carrying conductors become taut before the earth conductor.

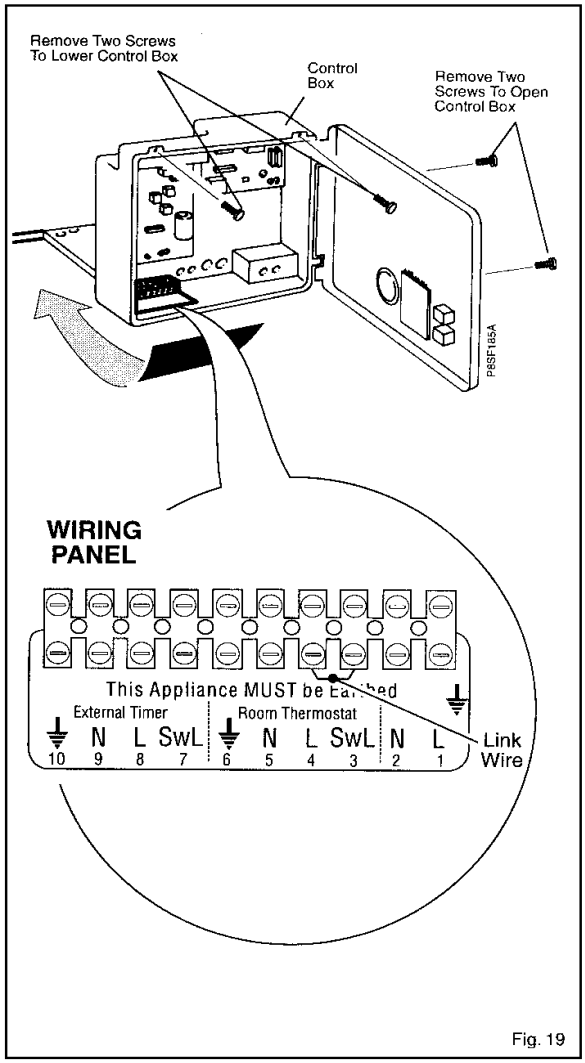


Fig. 19

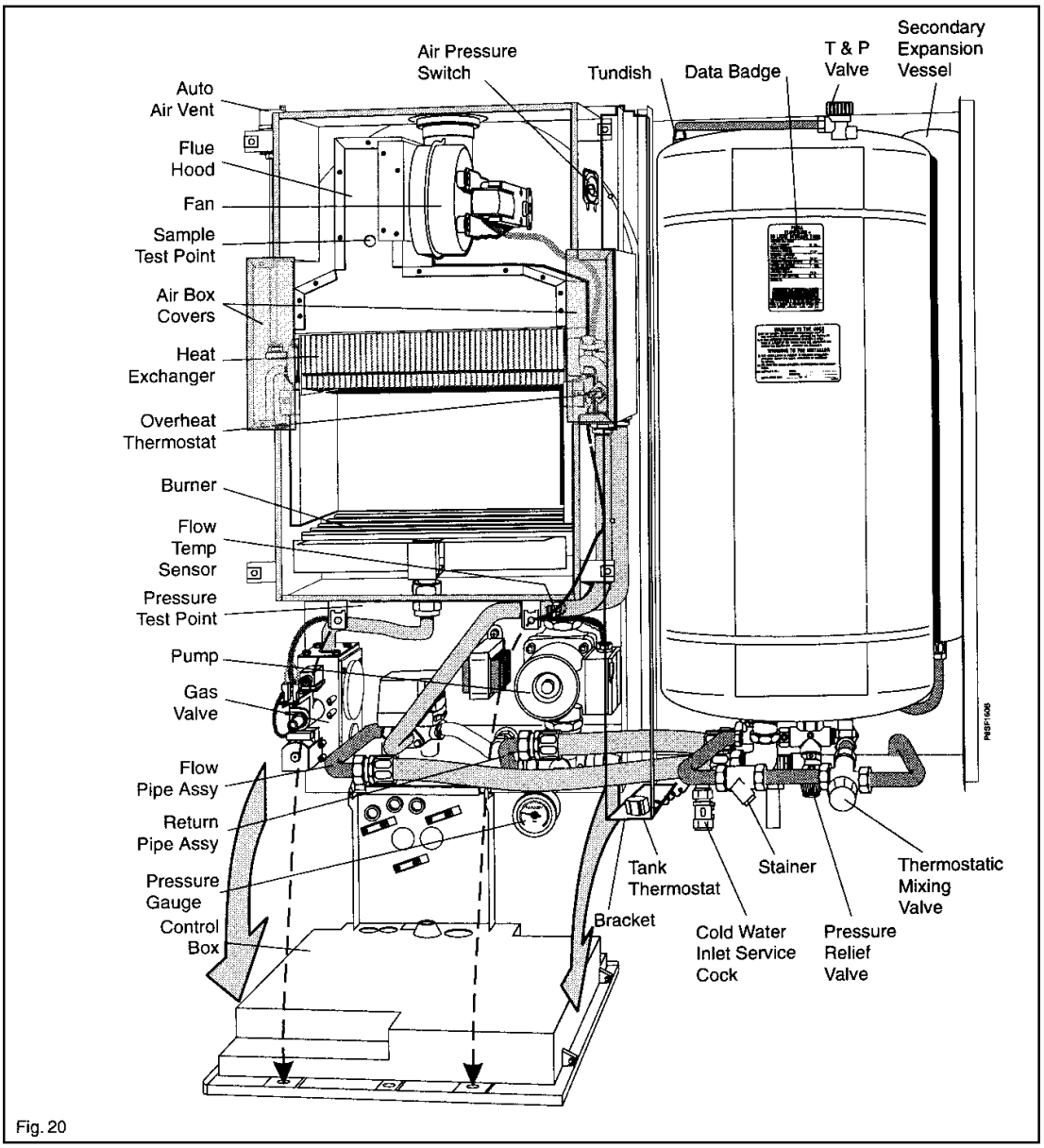


Fig. 20

The Puma Flowsure+ storage combination boiler has been through a rigorous test procedure after manufacture and should not require any further adjustment. If in the unlikely event of the appliance not operating correctly please turn to the Control Flow, Functional Flow and Fault Finding charts that start on Page 41.

## 3.1 Electrical Installation

Conduct a preliminary electrical test by checking: for short circuits, fuse failure, incorrect polarity, earth continuity and resistance to earth. If a fault has occurred on the appliance, the fault finding procedure should be followed. See Page 41.

## 3.2 Gas Installation

The whole of the gas installation including the meter, should be inspected and tested for soundness and purged in accordance with the recommendations of BS 6891. Purging air from the gas line may be carried out by loosening the union on the gas service cock and purging. Re-tighten the union when completed and check for gas soundness.

**N.B.** Open all doors and windows, extinguish naked lights and DO NOT SMOKE when carrying out the gas soundness tests and purging.

## 3.3 Initial Lighting

(See Fig. 20)

**WARNING:** Before operating the appliance, check that the air box covers are correctly fitted. The outer white front case should be left off for the time being. Carry out the following procedure in the order listed.

a) Thoroughly flush out the whole of the heating system with cold water.

b) Fill and vent the system until the pressure gauge registers 1.5 bar (21.5 psi), examine for leaks and rectify. Do not overtighten joints. During filling ensure that the plastic screw on top of the automatic air vent is not tight and air can escape. **Do not tighten the air vent screw after filling**. The temperature and pressure valve on top of the tank can be used to vent air from the tank.

To fill the coil inside the tank, push the lever on the diverter valve to it's mid position. Ensure that the lever is in the C.H position before lighting the appliance.

c) Check the operation of the pressure relief valve by further raising the water pressure until the valve lifts. This should occur at approx. 3 bar, indicated on the appliance pressure gauge. If installing in a low pressure area (below 3 bar) fill to the maximum pressure possible.

d) Release water from the system using the pressure relief valve until the minimum system design pressure is reached. (Generally 1.0 bar). To allow maximum central heating expansion capacity the pre-charge pressure in the central heating expansion vessel must be marginally greater than the initial (cold) system pressure at the appliance.

If the position of the appliance in the system will cause the pressure at the appliance to be greater than 1 bar (14.5 lb/in) increase the pre-charge pressure in the central heating expansion vessel to a marginally greater value prior to filling the system. Set the red pressure gauge indicator to coincide with this pressure.

Check the pump spindle is free to rotate by unscrewing the black octagonal nut, withdraw to engage the motor spindle. The knob should rotate freely. The pump will normally self vent the air from the rotor chamber and bearings within a short while of switching on. If manual venting is required, sideways pressure should be applied and maintained to the knob until a small amount of water becomes visible. The manual restart knob should now be screwed back to its original position, finger tight.

e) Fill the tank with water, venting periodically.

f) Check that the boiler switch is set to Stand-by and the central heating switch is set to the Off position. (Mid position)

g) Check that the Central Heating temperature controls on the control panel are set to minimum.

h) Check the Gas service cock is On.

j) Check that the boiler isolating valves and radiator valves are open.

k) Check that any time controls are in an On condition, and any room thermostats are calling for heat.

l) Ensure the link terminal is connected to the wiring harness.

m) Switch On the main electricity supply to the combination boiler at the wall isolating switch. The Mains light will now illuminate.

n) Loosen or remove the outlet (burner) pressure test point screw in the gas valve body (see Fig. 27), and connect via a flexible tube to the + or Hi side of pressure gauge. Then connect the - or Lo side of pressure gauge via another flexible tube to the pressure test point in the base of the inner casing. (See Fig. 20)

**IMPORTANT**
**Commission the boiler in Central Heating Mode before Domestic Hot Water Mode. To do this, ensure the tank thermostat link wire is connected to the main harness**

Adjusting the Central Heating Range Rate Pressure. See boxed Warning on page 22.

This pressure can only be measured in the central heating mode.

(i) Ensure all D.H.W outlets are turned off.
(ii) Ensure all radiator control valves are fully open and any room thermostats are calling for heat.
(iii) Set central heating temperature control knob to maximum.
(iv) Set central heating switch to Constant. The burner will now light but remain at low burner pressure for approximately 80 seconds. After this time it will go to maximum pressure. Allow the central heating to run for 5 or 10 minutes.
(v) Using the range rate adjustment knob on the electronic control board (see Fig. 28) adjust to the values for Range Rate in Table 4 on page 23.

p) Re-connect the tank thermostat lead.

q) Wait for the tank to heat. This will take approximately 10 minutes.

r) Fully open a hot water tap. After a short delay the main burner will light (the flame light will illuminate on the facia panel).

s) Turn off the hot tap.

**WARNING:**
When the appliance is operating, wiring in the area around the gas valve and printed circuit boards will be live. When it is necessary in the following sections to work in this area temporarily isolate the electrical supply. However this can not be done when adjusting the gas pressure therefore extra care must be taken during this operation. Where it is necessary to disconnect a modular coil wire (section 3.3 (q).) the connection should be taped.

**WARNING:** The pipes under the appliance could be hot, avoid contact with bare skin.

t) Fully open all domestic hot water outlets, vent flexible hose connections to the washing machine and dishwasher. Remove air from the domestic hot water distribution system. Test for gas soundness around the gas components using leak detector fluid.

u) Check the minimum burner pressure (see Table 4) by disconnecting one of the Modulating Coil electrical connections (wire colours Red or Black).

Note: The modulating valve connections are 24V only. See Fig. 27.

v) Reconnect and check maximum burner pressure against Table 4. If any adjustment is necessary see Section 3.4, Gas Pressure Adjustment.

**Note:** The boiler is so designed that if required, the central heating output can be down rated to the lowest setting stated on the data plate, without affecting the D.H.W output. If adjustment is required see Section 3.4 Gas Pressure Adjustment.

## 3.4 Gas Pressure Adjustment

**Note:** The gas pressures are set at the factory (with central heating output set at maximum) and should not require further adjustment. If gas pressure readings are being obtained which differ from that stated in Table 4, check the inlet pressure using the inlet pressure test point on the gas valve (see Fig. 27). The inlet pressure should be checked with the appliance at full gas rate. To ensure this occurs, put a high water flow through the domestic hot water side of the system and wait for the burner to light. Ensure that the range rate adjuster is set to maximum.

**Note:** When checking gas inlet pressure only connect one tube from the measuring manometer's +ve side. Do not connect the -ve tube as with minimum and maximum pressure readings.

**Adjustment of the Modulating Valve**

Pressures are measured by connecting the +ve connection to the gas outlet and -ve connection to the base of the inner casing as described in Section 3.3. Set the pressures to the values in Table 4 by adjusting the gas valve in the following manner.

**Note:** It is important to note the order in which the maximum and minimum pressures are set.

The maximum pressure must always be set before adjustment of the minimum pressure.

**Adjusting the Maximum Pressure (See Fig. 21)**
**See boxed Warning on this page.**

(i) Cut off cable tie retaining modulator Cover.
(ii) Remove Cover (C) by twisting it anticlockwise 90° and levering off with a small screwdriver.
(iii) With a 10mm spanner turn nut (B), (Clockwise to increase pressure). Adjust to the value for maximum pressure stated in Table 4.

**Adjusting the Minimum Pressure (See Fig. 21)**
**See boxed Warning on this page.**

This adjustment is only to be made after the maximum setting has been completed.

(i) Disconnect one of the electrical connections of the modulating coil and tape. (24V only)
(ii) Using a 10mm spanner hold nut (B) and adjust screw (A) with a screwdriver (clockwise rotation will increase the pressure). Set to the value for minimum pressure stated in Table 4.
(iii) Reconnect the electrical connection to the modulator.
(iv) Check maximum and minimum settings. Repeat adjustment if required.
(v) Refit cover (C), snap into place and turn.

After the setting operation remove the pressure gauge tubes from the gas valve body and inner casing. Refit the pressure test point screws.

Check all wiring and reposition the control panel.

Secure the panel with the screws provided.

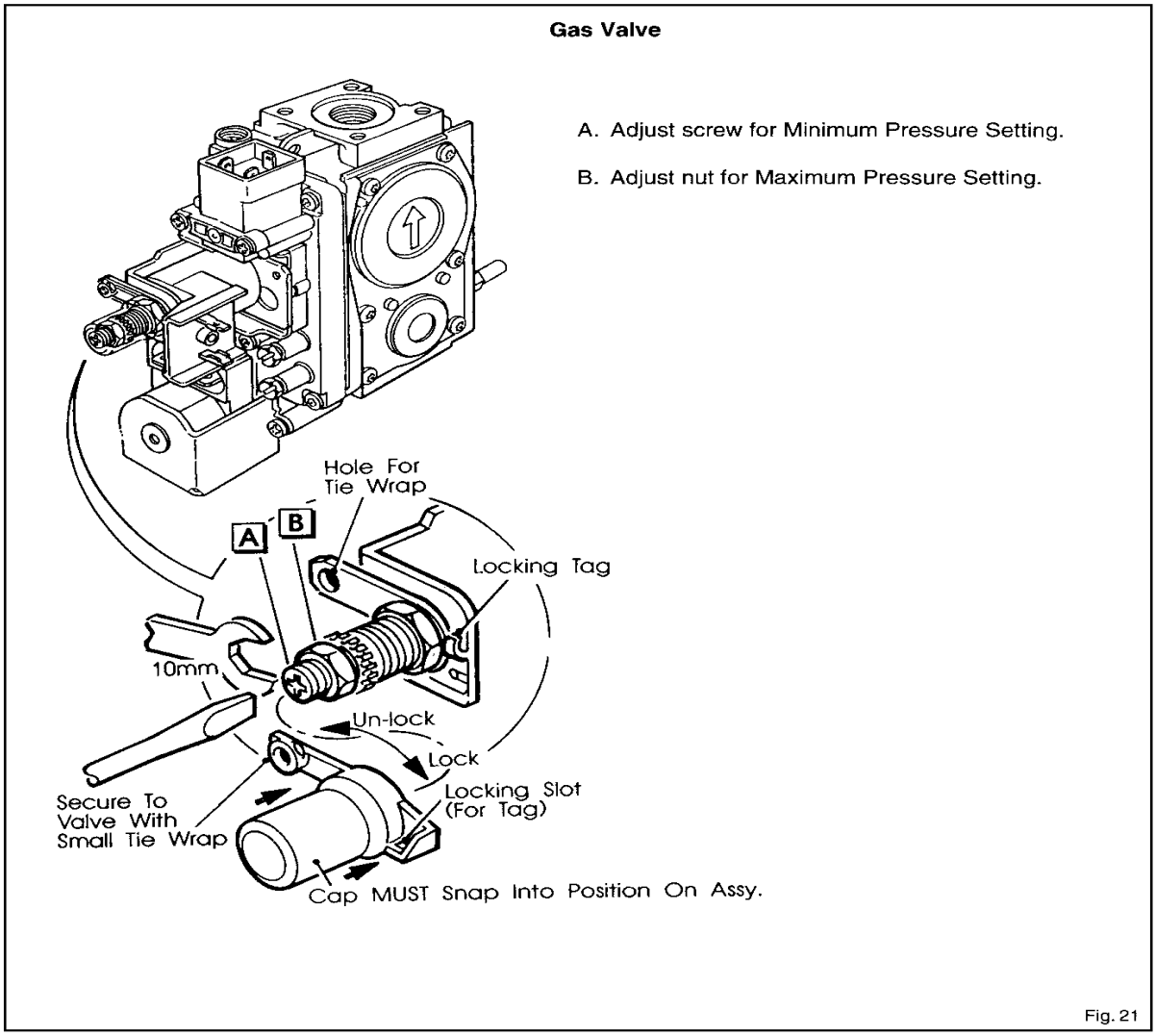

Fig. 21

| | Setting Pressure | Tolerance | Gas Rate |
|---|---|---|---|
| Maximum Pressure | 15.0 mbar | 15.2 mbar<br>14.8 mbar | 2.79 $m^3$/hr<br>98.1 $ft^3$/hr |
| Range Rate | 8.3 mbar | 8.4 mbar<br>8.2 mbar | 2.10 $m^3$/hr<br>73.7 $ft^3$/hr |
| Minimum (Ignition) Pressure | 3.5 mbar | 3.6 mbar<br>3.4 mbar | 1.34 $m^3$/hr<br>47.2 $ft^3$/hr |
| **Inlet Pressure 20 mbar (8" w.g.)** | | | |

Table 4. Gas Pressures

## 3.5 Products Of Combustion Measurement

The combustion performance can be assessed by placing a suitable sampling probe through the access hole in the inner casing door whilst the appliance is running. Typical figures based on a 500mm flue length with the boiler operating at maximum output are:-

CO. 0.002 - 0.005%
$CO_2$. 4.5 - 5.0%

Replace the screw in access hole after test.

## 3.6 D.H.W Flow Rate

The appliance contains an automatic flow regulator supplying a nominal flow rate of 12 litres/minute.

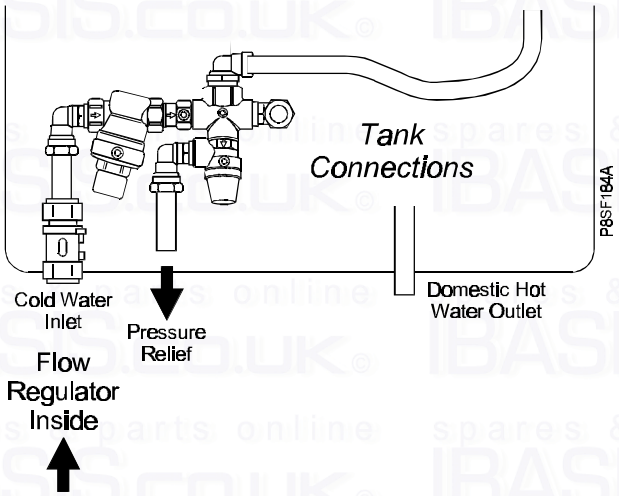


## 3.7 Central Heating

a) Ensure that all external controls such as a timers are switched On and that room thermostat/s are calling for heat.

b) Set the Central Heating switch to Timed (if system fitted with Timer) or Constant. The appliance will operate in accordance with the pre-selected temperature set on the temperature control knob.

## 3.8 Temperature Controls

a) Central Heating

The control knob enables you to control the temperature of the central heating flow as it leaves the appliance. This knob can be set between the - and + setting. The graduations correspond approximately to a temperature of 60°C to 85°C. Under a minimum load condition the flow temperature can rise to 90°C at maximum setting. The appliance is fitted with a Central Heating switch which will allow you to switch Off the central heating during the summer months (mid position).

b) Hot Water

The tank thermostat is factory set for best performance. The mixing valve on the tank outlet is adjustable and should be set to deliver water at approximately 60°C.

Ensure that the tank thermostat lead is connected.

## 3.9 Appliance Protection Devices

Loss of gas supply, flame failure, or over-heating of the central heating water will cause the appliance to shut down or Lockout.

This will be indicated by the lockout light being illuminated. To Reset the appliance press the RESET button on the front panel and hold in that position for 10 seconds and release. The appliance should now operate normally.

If this is not the case refer to the Fault Finding guide either on the rear of the white front case or Page 41 of these instructions.

If the central heating system looses pressure for any reason the appliance will overheat and lockout. The system and the appliance should be checked for leaks (including discharge from the pressure relief pipe). Correct any faults and re-pressurise the system with reference to Section 1.6. Mains Water Feed Central Heating.

The tank protects the boiler against frost as long as the boiler switch is set to 'On'.

**Note:** While the appliance is being used to provide hot water at any draw off point, the central heating will not operate. When hot water is no longer required the appliance will, after a few minutes, revert to central heating.

spares & parts online IBASIS.CO.UK

## 3.10 Refit the White Front Case.

a) Re-fit the right hand side boiler panel to the right hand side of the tank frame.

b) Re-fit the left hand side boiler panel to the left hand side of the boiler.

c) Secure the base plate to the boiler using the two screws provided.

d) Fit the bottom cover to the tank using the two screws provided.

e) The front panels for the boiler can now be fitted.

## 3.11 Handing Over to the User

After completion of installation and commissioning of the system, the installer should hand over to the Householder by the following actions:

a) Explain to the Householder where to find the User's Guide and his/her responsibilities under the 'Gas Safety (Installation and Use) Regulations 1994'.

b) Explain and demonstrate the lighting and shutting down procedures.

c) Demonstrate the operation of the boiler including the use and adjustment of all system controls. This then ensures the greatest possible fuel economy consistent with household requirements of both heating and hot water consumption. Advise the User of the precautions necessary to prevent damage to the system, and to the building, in the event of the system remaining inoperative during frost conditions.

d) Explain the function and the use of the boiler switch, central heating switch and Reset button.

e) Explain and demonstrate the function of time and temperature controls, external frost thermostat (if fitted) and radiator valves, etc. for the economic use of the system. Ensure the user understands, that during the summer when central heating is not required, that the CH switch is set to off.

f) If a Time Control is fitted (internal or external), then draw attention to the timer 'User Instructions' and hand them to the householder.

g) Stress the importance of regular servicing by a qualified Heating Engineer and that a comprehensive service should be carried out AT LEAST ONCE A YEAR.

# 4. Servicing - Page 26

To ensure the continued safe and efficient operation of the appliance it is recommended that it is checked and serviced as necessary at regular intervals.

The frequency of servicing will depend upon the particular installation conditions and usage but in general, once per year should be adequate. It is the law that all servicing work is carried out by competent person such as British Gas or other CORGI registered personnel.

**WARNING**: Before the start of any maintenance work, disconnect the mains electricity supply to the appliance by removing the plug from the socket or by switching off at the external isolating switch. The gas distribution pipework and all associated appliances (including the boiler) must be checked for gas soundness. The appliance gas supply should be isolated at the gas service cock, (one quarter turn of square spindle) if dismantling gas carrying components.

The following notes apply to the appliance but it should be remembered that attention must also be paid to the heating and hot water systems in the property with special attention to radiator valves, thermostats, clocks, leaking hot water taps etc.

Where it is necessary to replace a gasket that relies on adhesive for securing - this adhesive will be supplied with the gasket in the spares kit.

Prior to servicing, Remove the white front case (see 5.1 in `Routine Maintenance'). Operate the appliance by turning On a hot water tap to a high water flow and wait for the main burner to light. This may take a couple of minutes.

Look through the sight glass and check that the flame covers all the flame ports and is of a light blue colour. Yellow flames and excessive lifting of flames indicate poor combustion.

It is preferable to measure the CO% and $CO_2$% content of the flue products. This is achieved by placing a suitable sampling probe into the fluehood via the sample test point on the air box door.
Typical figures based on a 500mm flue length with the boiler operating at maximum output are:-

| | |
|---|---|
| CO | 0.002 - 0.005% |
| $CO_2$ | 4.5 - 5.0 % |

**IMPORTANT:** After completing any servicing or replacement of a gas carrying component, it is essential that a test for gas soundness is made and functional checks of controls operation carried out.

# 5. Routine Maintenance - Page 27

Routine Maintenance (Carry out the following sequence 5.1 - 5.10)

**5.1 Remove the White Front Case**
(See Fig. 13 in the Boiler Installation Section).

a. Remove the two securing screws located at the base of the white front case assembly.
b. Ease the base of the case forward approximately 50mm and lift to release the panel from the securing hooks at the top of the appliance.
c. Remove the case and place in a safe position away from the immediate working area.

**5.2 Remove Base Panel**

a. Remove the two securing screws retaining the base panel to the case sides.
b. Lower the front edge and push backwards to release cover

**5.3 Remove the Air Box Covers**

a. Take out the six securing screws and remove the main air box cover.
b. Remove the two screws securing the front edge of the left hand white case side panel. This will allow the side panel to be sprung outwards to improve access for the following operation.
c. Remove the four screws securing the two remaining air box side covers and remove.

**5.4 Remove the Fan Assembly**

a. Disconnect the fan wiring by separating the in-line connector.
b. Support the fan and remove the two fixing screws from the front edge of the fan mounting plate. Lower the fan and carefully withdraw it from the appliance. Put in a safe place until required.

**5.5 Remove the Flue Hood**

a. Remove the two flexible tubes connected to the left and right hand sides of the fluehood.
b. Slacken the screw on the left-hand rear of the flue hood (but do not remove) and fully remove the remaining right hand screw.
c. Lift and remove the fluehood to expose the top surface of the heat exchanger.

**5.6 Remove the Combustion Chamber Front Panel**

a. Remove the two screws securing the combustion chamber front panel.
b. Remove the panel by pulling the top edge forwards and lifting the panel clear of the two lower retaining flanges. Ensure the insulation remains in position. The underside of the heat exchanger is now exposed.

## 5.7 To Inspect and Clean the Boiler
(See Fig. 23)

a. Inspect the heat exchanger for any blockage. Deposits of any material should be brushed away using a soft brush.

   **Note:** Do not use brushes with metallic bristles.

b. Examine internal pipe work connections and automatic air vent for any water leaks. Rectify if necessary.
c. Examine the combustion chamber insulating material and renew if damaged. To remove the combustion chamber side panels undo the single screw from each side and pull panel forward. The insulation can now be removed from the panel. To remove the insulation from the rear of the combustion chamber remove the burner and two hexagonal burner location supports and take out the two screws from the insulation support bracket. Remove the support and slide the insulation downwards from behind the heat exchanger.
d. Check the electrodes for damage or deterioration. Ensure that the spark gaps are correct to dimensions specified in Fig. 23. Clean or renew as necessary. Do not bend the electrodes as the insulating material may crack.
e. Examine the fan for any mechanical damage (including seals), check to ensure free running of the fan wheel. Clean the wheel if necessary with a soft brush.

   **Note:** It is essential that a good seal is made at the fan, renew the sealing collar or fluehood sealing ring if there are any signs of damage or deterioration.
   See Section 6.17 of Component Replacement.

f. Examine flue ducts and flue hood and ensure that there is no obstruction. Re-assemble all components in reverse order, (ensure all seals are replaced correctly).

During re-assembly check the air box door and side cover seals for damage or deterioration and renew if necessary.

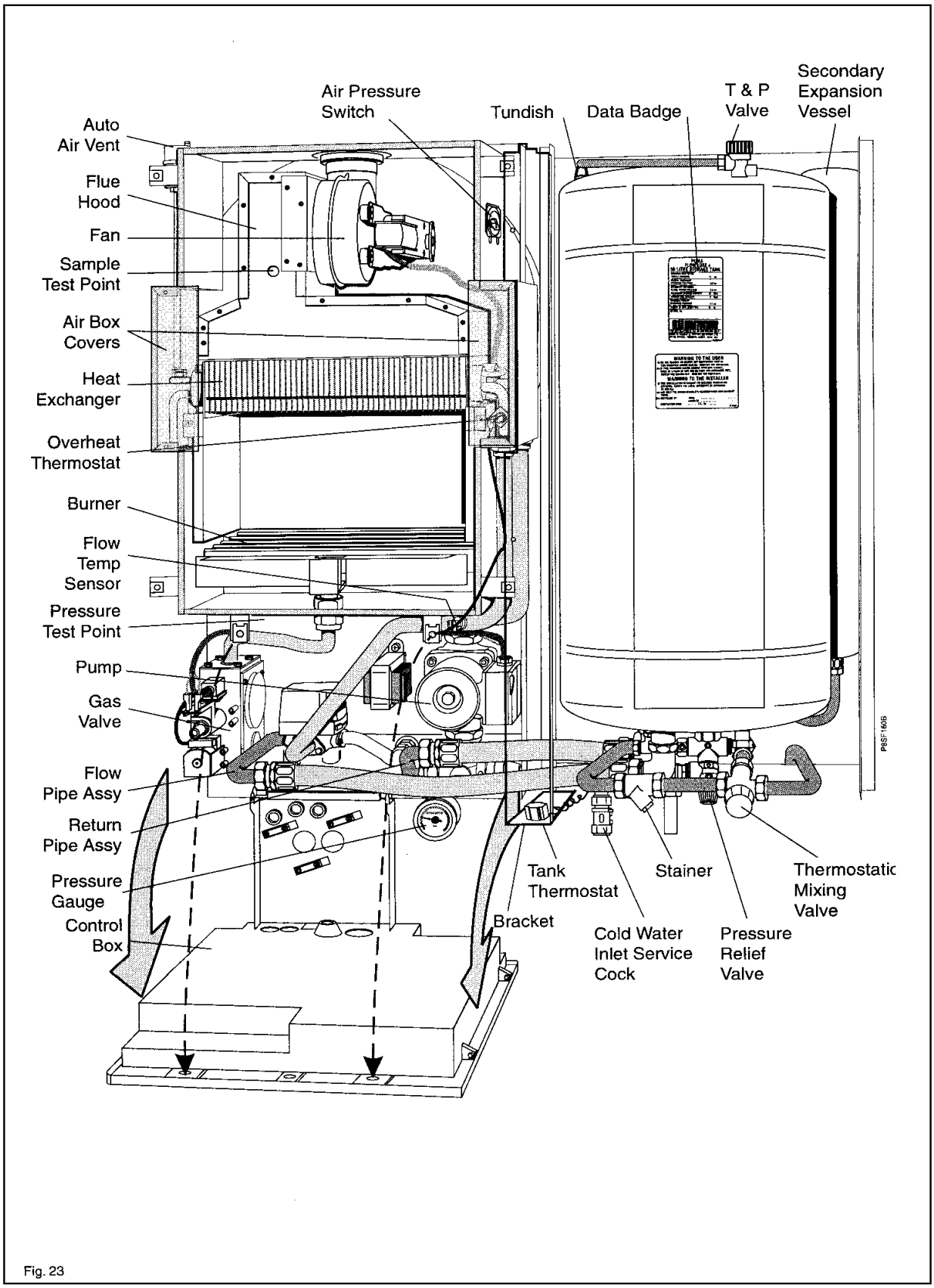
Air Pressure Switch
Tundish
Data Badge
T & P Valve
Secondary Expansion Vessel
Auto Air Vent
Flue Hood
Fan
Sample Test Point
Air Box Covers
Heat Exchanger
Overheat Thermostat
Burner
Flow Temp Sensor
Pressure Test Point
Pump
Gas Valve
Flow Pipe Assy
Return Pipe Assy
Pressure Gauge
Control Box
Tank Thermostat
Bracket
Cold Water Inlet Service Cock
Stainer
Pressure Relief Valve
Thermostatic Mixing Valve
P85F1005

Fig. 23

## 5.8 Remove the Burner

(See Fig. 24)

a. Disconnect the two leads to the electrodes. (Do not pull on the cable).

b. Undo the hexagonal union nut under the burner, taking care not to loose the seal *. Carefully pull the burner forward approximately 3 mm to disengage the rear burner supports, then lift the rear of the burner to an angle greater than 45°. Continue to roll the burner out of the appliance.

c. Remove the burner injectors separately to examine their status, clean or renew as necessary.

* If, during removal of the burner, the burner sealing washer becomes damaged, the appliance is supplied as standard with two spare sealing washers. They are in a polythene bag located on the inside face of the base panel. Further washers can be purchased from Potterton, Part No.13-18693.
If the boiler has been operating, care must be taken to avoid contact with any hot ceramic fibre board or pipework on the underside of the appliance, during inspection and cleaning.

## 5.9 Gas Pressures - Adjustment

See Section 3.4. Page 21.

## 5.10 The Central Heating Sealed System

Check that the pressure in the system is being maintained. The pressure gauge is fitted with a moveable red marker which indicates the initial filling pressure of the system when cold. If the pressure gauge needle indicates a lower pressure than the red marker, the system has lost pressure and should be re-pressurised. The correct procedures are shown in the installations section. See `permissible methods of filling' Page 10.

## 5.11 Other Components

No further servicing is required on any other appliance components. It is advisable to operate the three water isolating taps to maintain free operation. It is recommended that the pressure relief valve is operated during servicing. It may occasionally be necessary to replenish the pre-charge in the expansion vessels. This can be readily achieved by use of a portable air pump.

**Note:** The water side of either expansion vessel must be depressurised prior to re-pressurising the air side.

Access can be made to the charging points on the respective vessels, as follows:

a. Central Heating expansion vessel - access is made to the vessel charging point from above on the right hand side of the appliance. Re-pressurise to a minimum of 1 bar (14.5 lb/in) or marginally greater than the designed system pressure at the appliance when cold, which ever is higher.

b. Domestic Water expansion vessel - access to the vessel charging point is at the top of the vessel underneath the black plastic cap. This can be gently prized off using a screwdriver.

**Storage Tank**

The strainer will need to be checked periodically to ensure that no blockage has occurred. Access is via a cap that unscrews.

Isolate the tank by closing the tank isolation valve and turning on a domestic hot water tap, drain the tank using the drain valve below the tank. This will drain most of the water from the outlet pipework but some may still remain, therefore take care when removing the strainer cap.

spares & parts online IBASIS.CO.UK

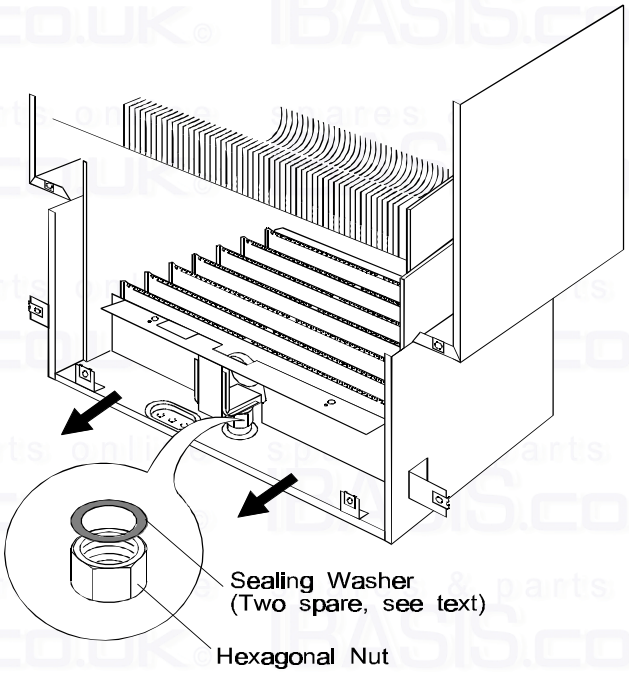


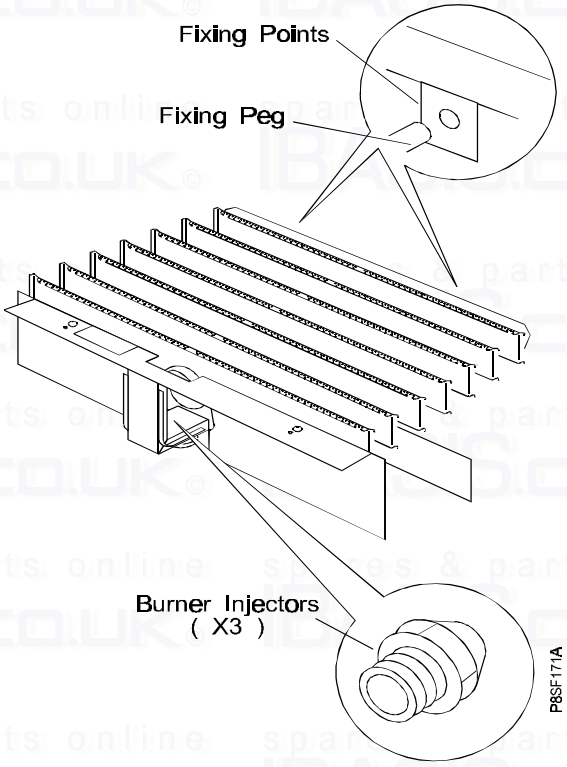


spares & parts online IBASIS.CO.UK

# 6. Component Replacement - Page 31

**WARNING:** Before attempting to remove any component from this appliance, first disconnect the mains electricity supply by removing the plug from the wall socket or by switching off the appliance at the external isolating switch. Note: The appliance stand-by switch must not be used as the means of isolating, as this switch does leave parts of the appliance electrically live.

**IMPORTANT:** After removal or replacement of any gas carrying components a test for gas soundness must be made.

**Notes:** The appliance gas supply should be isolated at the boiler gas service cock (one quarter turn of square spindle).

The Central Heating and Domestic Hot Water circuits can similarly be isolated at their respective valves. A drain point is provided in the appliance heating circuit under the pump manifold and the cold water inlet isolating valve also incorporates a drain screw. Use a suitable tube when draining to direct water away from the appliance.

The storage tank can be drained using the drain valve on the bottom of the tank.

When removing any water carrying components suitably protect the control box from accidental spillage.

Before removing any component from the central heating circuit on the appliance, reduce the pressure by closing the isolating valves and opening the pressure relief valve.

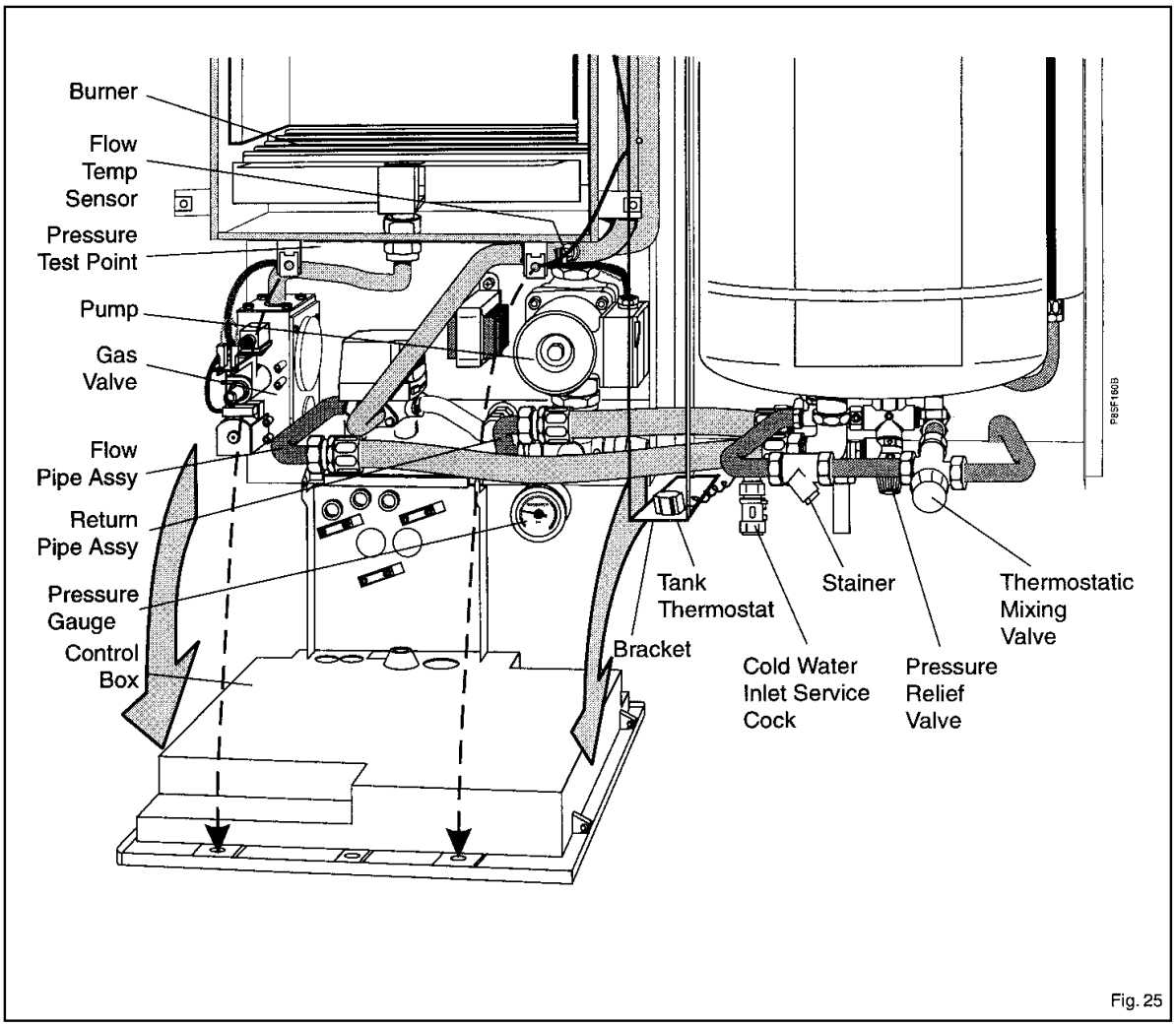


Fig. 25

spares & parts online IBASIS.co.uk

## 6.1 Central Heating Overheat Thermostat

See Fig. 26

a. Remove the white front case and three air box covers. See 5.1 & 5.3 in 'Routine Maintenance'.
b. The thermostat is located on the outlet tail on the right hand side of the heat exchanger. Disconnect the two electrical leads.
c. Undo the two long fixing nuts and remove the thermostat from the heat exchanger.
d. Fit the new overheat thermostat taking care not to touch the exposed disc on the thermostat face. **Do Not use heat sink compound**. Re-assemble in reverse order.

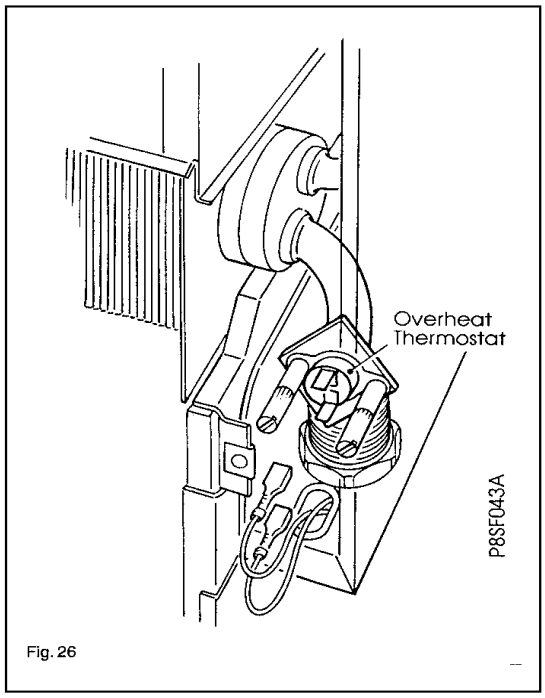


Fig. 26

## 6.2 Sensor and Ignition Electrode

a. Remove the white front case, base panel, air box covers and combustion chamber front panel. See 5.1 to 5.3 & 5.6 in 'Routine Maintenance'.
b. Disconnect the lead from the base of the electrode to be changed. Remove the electrode retaining screw and remove the electrode from the burner.
c. Fit new electrode and re-assemble in reverse order, checking the gap measures 4mm ± 0.5mm (Fig. 23).

## 6.3 Sensor and Ignition Leads

a. Remove the white front case, base panel and main air box cover. See 5.1 to 5.3 in 'Routine Maintenance'.
b. Lower control panel (two screws)
c. Note run of lead.
Remove lead ends from electrode and Full Sequence Control Board. Pass lead through the silicone grommet.
d. Fit new lead in correct position.
e. Re-assemble in reverse order. Ensure the silicone grommet is correctly fitted and not damaged. Replace if necessary.

## 6.4 Burner

(See Fig. 24)

a. Remove the white front case, air box covers, combustion chamber, front panel and burner assembly. See 5.1, 5.3, 5.6 & 5.8 in 'Routine Maintenance'.
b. Remove the electrodes or pilot burner from the main burner and re-assemble onto the new main burner. Check electrode gap is 4mm ± 0.5, See Fig. 24.
c. Re-assemble in reverse order.

## 6.5 Injectors

(See Fig. 24)

a. Remove the white front case, air box covers, combustion chamber front panel and burner assembly. See 5.1, 5.3, 5.6 & 5.8 in 'Routine Maintenance'.
b. With the main burner removed, release the burner manifold by removing the 4 screws to give access to the injectors.
c. Replace the relevant injector/s ensuring that the brass washer is fitted under each injector.
d. Re-assemble in reverse order.

## 6.6 Gas Valve

(See Fig. 26)

a. Remove the white front case, base panel & white left hand side panel.
See 5.1, 5.2 & 5.3 in 'Routine Maintenance'.
b. Isolate the gas supply at the gas cock (1/4 turn).
c. Remove the electrical connectors from the modulating valve, the plug from the first solenoid valve and gas valve compensation tube.
d. Undo the nut on the lower gas supply tube.
e. Support the gas valve assembly and undo the nut on the burner supply pipe under the air box. Remove the gas valve assembly from the appliance.
f. Remove the second solenoid valve (2 screws).
g. Remove the screw and disconnect the electrical connector to the second solenoid valve and remove the rubber gasket.
h. Before the new gas control valve is fitted, fit the rubber gasket to the second solenoid valve and secure the electrical connector to the second solenoid valve (1 screw), transfer the burner feed pipe and lower gas supply tube to the new valve. Replace the 'O' rings if necessary.
i. Re-assemble in reverse order ensuring that the black and red wires (low voltage) are connected to the modulator valve (see Fig. 27) Polarity is not important.

## 6.7 Modulating Valve

a. Remove the white front case.
See 5.1 in ’Routine Maintenance’.
b. Disconnect the electrical connections to the modulating valve. (Red and Black).
c. Remove the clear plastic cover by cutting off the nylon tie, twisting the cover anti-clockwise 90° and levering off with a small screwdriver.
d. Using a 14mm spanner unscrew the complete inner cartridge and remove with niting plate.
e. Lift off the solenoid coil and remove from the metal bracket.
f. Replace in reverse order ensuring the notch in the niting plate is located over the raised pip on the new solenoid coil.
g. Reconnect the red and black wires to the terminations on the modulation coil. Polarity is not important.
h. Reset the gas pressure -
see 3.4 'Commissioning', Page 22.
i. Refit the clear plastic cover, snap into place and turn.

## 6.8 First Solenoid Valve Coil

(See Fig. 26)

a. Remove the white front case.
See 5.1 in 'Routine Maintenance'.
b. Disconnect the electrical connecter to the first solenoid valve.
c. Remove the first solenoid valve (2 screws).
d. Replace the solenoid valve in reverse order.
e. Re-commission the appliance as described in section 3.

## 6.9 Second Solenoid Valve

a. Remove the white front case.
See 5.1 in 'Routine Maintenance'.
b. Remove the second solenoid valve (2 screws).
c. Remove the screw and disconnect the electrical connecter to the second solenoid valve.
d. Transfer the rubber gasket to the new solenoid valve.
e. Replace the solenoid valve in reverse order.
f. Re-commission the appliance as described in section 3
.

## 6.10 Case Seals

a. Remove the white front case, base cover and air box covers.
See 5.1, 5.2 & 5.3 in ’Routine Maintenance’.
b. Peel off the existing case seal(s).
c. Fit new seal(s) and re-assemble, in reverse order.

## 6.11 Central Heating and Boiler Switches

a. Remove the white front case and base panel.
See 5.1 & 5.2 in ‘Routine Maintenance’.
Lower the facia panel, (1 screw).
b. Make note of the wire routing and switch orientation and disconnect the connectors from the switch terminals.
c. Using a small screwdriver press the retaining lugs on the switch body sides inwards and remove the switch from the control panel.
d. Fit new switch assembly and re-assemble in reverse order. Ensure that the switch is the correct way round in the panel i.e. when the Stand-by/On switch is On, the red indicator line on the switch can be seen.

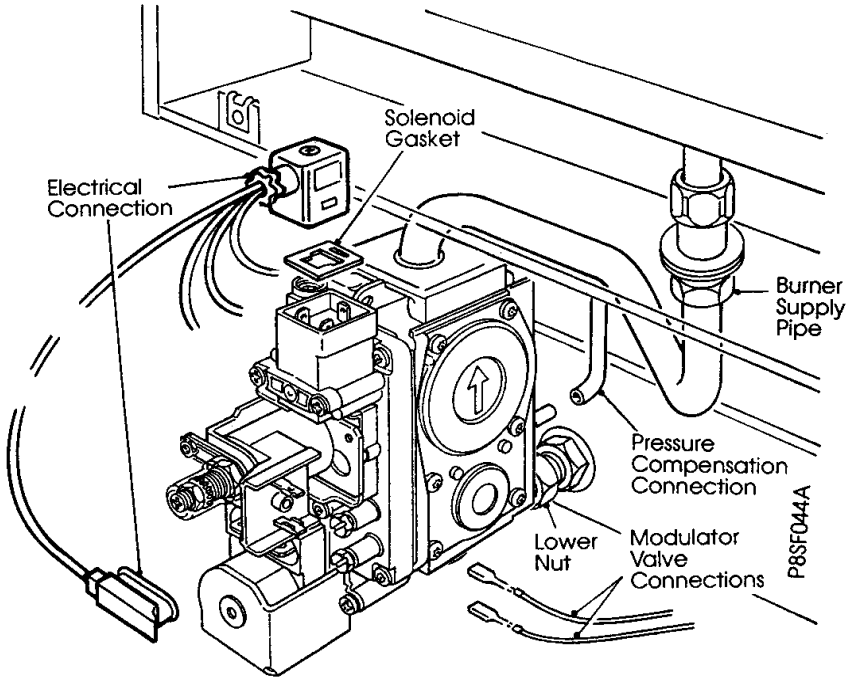
Solenoid
Gasket
Electrical
Connection
Burner
Supply
Pipe
Pressure
Compensation
Connection
Lower
Nut
Modulator
Valve
Connections
P8SF044A

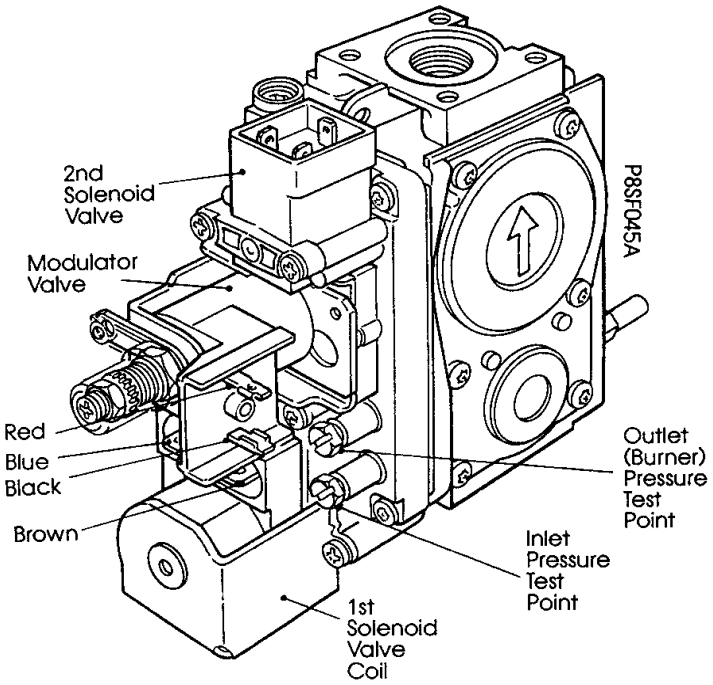
2nd
Solenoid
Valve
Modulator
Valve
Red
Blue
Black
Brown
Outlet
(Burner)
Pressure
Test
Point
Inlet
Pressure
Test
Point
1st
Solenoid
Valve
Coil
P8SF045A

Fig. 27

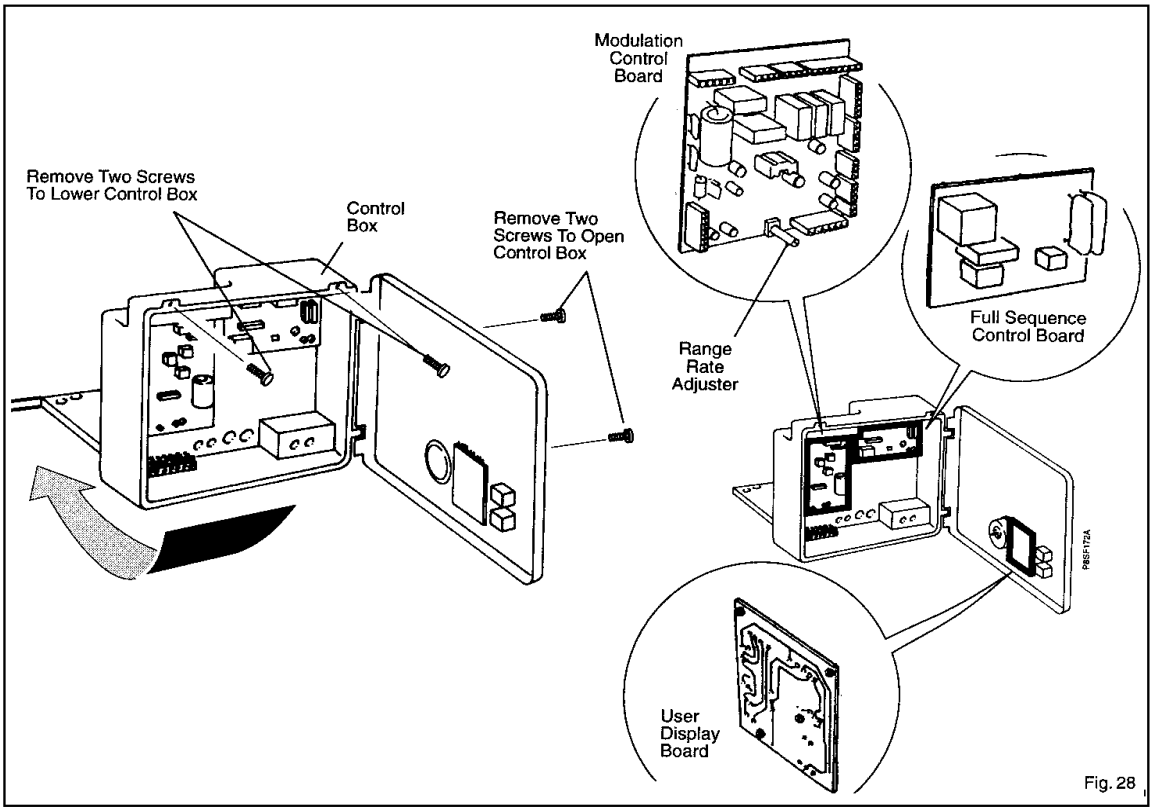

Fig. 28

## 6.12 Electronic Control Boards

(see Fig. 28)

The electronic control assembly is in three parts:

i. The User Display Board.

ii. The Control Board.

iii. The Full Sequence Control Board.

a. Remove the white front case and base panel. See 5.1 & 5.2 in 'Routine Maintenance'.

**(i) USER DISPLAY BOARD**

a. Remove the thermostat knob.

b. Undo the fixing screws retaining the control box door.

c. Remove the plug connector/s from the rear of the board and undo the three securing screws and switch guard. The fourth screw is located underneath the switch guard.

d. Replace board and re-assemble in reverse order.

**(ii) CONTROL BOARD**

**Note:** The board has a replaceable fuse rated at 2A.

a. Undo the fixing screw retaining the control box door.

b. Spring back the two plastic tags and lift the right hand side of the board. The left hand edge is located under two lugs inside the control box.

c. Replace the board and re-assemble in reverse order.

**(iii) FULL SEQUENCE CONTROL BOARD**

a. Undo the fixing screws retaining the control box.

b. Slide the electrode and flame sensors wire connections out of their respective slots on the board. Disconnect all plug connections and carefully remove the earth tab.

c. Spring back the two plastic tags on the lower edge of the board and lift the edge slightly. The upper edge is located under two lugs inside the control box.

d. Replace the board and re-assemble in reverse order using the location posts to position the board.

spares & parts online IBASIS.CO.UK

## 6.13 Air Pressure Switch

(see Fig. 20 & 29)

a. Remove the white front case, base panel and white right hand side panel. See 5.1, 5.2 & 5.3 in 'Routine Maintenance'.
b. From the top right hand side of the boiler undo the securing screw retaining the pressure switch /bracket assembly
c. Lift the pressure switch / bracket assembly clear of the top of the boiler. Note positions and disconnect pressure tubes and electrical connectors.
d. Replace pressure switch and re-assemble in reverse order.

**Note:** The Red pressure tube must be connected to the High side of the switch, indicated by (H) and a Red Paint Spot. The electrical connections must be as follows.-

| | | |
|---|---|---|
| Orange | Common | (C) |
| Violet | Normally Closed | (NC) |
| Grey | Normally Open | (NO) |

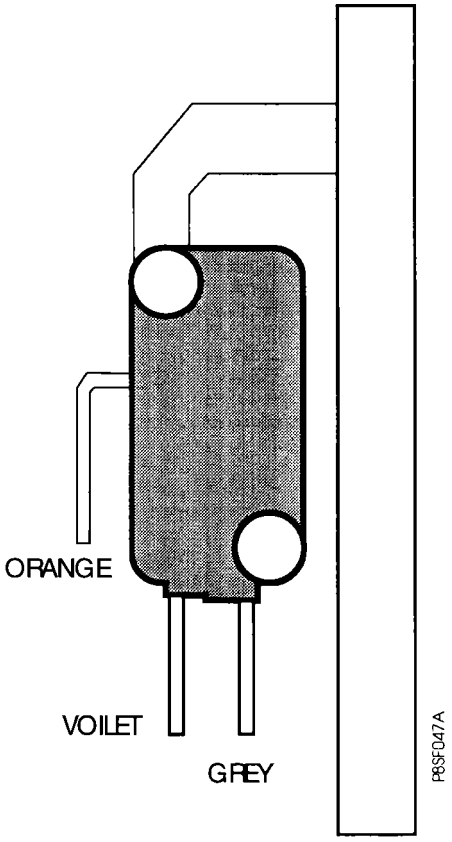


## 6.14 Fan

a. Remove the fan. See 5.1, 5.2, 5.3 & 5.4 in 'Routine Maintenance'.
b. Transfer the fan outlet seal to the new fan and fit the fan into the appliance. Ensure a good seal is made between the fan inlet and the fluehood.
c. Re-assemble in reverse order. Ensure the seal is not trapped on the turned down edge.

## 6.15 Fan Seals

a. Remove the fan. See 5.1, 5.2, 5.3 & 5.4 in 'Routine Maintenance'.
b. Remove the fan outlet seal by sliding the seal off the fan. Remove the fan inlet seal by pulling the seal away from the fluehood and disconnecting the pop in locaters.
c. Fix the new seals in position.
d. Re-assemble in reverse order. Ensure the seal is not trapped on the turned down edge.

## 6.16 Flow Temperature Sensor

(See Fig. 20)

a. Remove the white front case and base panel. See 5.1 & 5.2 in 'Routine Maintenance'.
b. Before removing the sensor, first close the isolating valves and drain the appliance.

With both 22mm isolating valves closed, reduce the system pressure by opening the pressure relief valve and drain the water from the heating circuit by removing the drain plug from the underside of the pump manifold.

c. Disconnect the electrical connection from the sensor(s) and unscrew from its housing.
d. Refit the new sensor(s) and 'O' Ring seal if required. Re-assemble in reverse order. If necessary re-charge the central heating system as described in section 1.6 and check for leaks.

## 6.17 Pressure Gauge

(See Fig. 20)

a. Remove the white front case and base panel. See 5.1 & 5.2 in 'Routine Maintenance'.
b. Close the central heating isolating valves, reduce the system pressure by opening the pressure relief valve, then drain the water from the appliance by removing the drain plug located under the pump manifold.
c. Use a spanner to prevent the pressure gauge from rotating and undo the 1/4" BSP nut behind the pressure gauge and remove the gauge.
d. Fit the new pressure gauge, in its correct position. Re-assemble in reverse order. Use the new washer to seal. Re-charge the central heating system as described in section 1.6 and check for leaks.

## 6.18 Pump

(See Fig. 25)

For ease of replacement it is advisable to fit a new motor (head) assembly to the existing pump housing. This will prevent excess dismantling and save time as the motor assembly may well need to be removed from the new pump to correctly position the electrical control box.

a. Remove the white front case and base panel. See 5.1 & 5.2 in 'Routine Maintenance'.
b. Lower the control panel assembly (two screws).
c. Unplug the pump wiring at the in-line connector.
d. Close the two central heating isolating valves, reduce the system pressure by opening the pressure relief valve, and drain the water from the central heating system by removing the drain plug on the underside of the pump manifold.
e. Remove the motor head assembly from the pump body by removing the four retaining screws.
f. Transfer the wiring harness from the old pump to the new, note the following wiring terminations.

| | |
|---|---|
| Live (L) | Pink |
| Neutral (N) | White |
| Earth | Green/Yellow |

g. Fit the new pump head assembly using the new sealing ring, ensure that the pump terminal block is to the right hand side with the wires running out of the top. Secure tightly and re-assemble in reverse order. Re-charge the system as described in section 1.6 and check for leaks. When applicable, ensure that the pump is set to the highest speed.

## 6.19 Expansion Vessel C.H.

**Note:** In the unlikely event of a failure of the C.H. expansion vessel it is recommended that a new vessel be fitted exterior to the boiler.

Installations with vertical flue systems must be fitted with exterior expansion vessels if the flue system can not easily be raised a minimum of 50mm.

It should be positioned on the C.H. Return pipe (see Fig. 4) as close to the boiler as possible. If however, the vessel must be replaced then the following procedures may by used.

**Note:** It will simplify fitment of the vessel if a length of string or flexible wire is attached to the end of the flexible pipe and passed down the rear of the appliance through the back panel hole and used as a guide to thread the pipe during installation.

***PROCEDURE 1**. Horizontal flues only.*

If the clearance above the boiler is **greater than 300mm** proceed as follows:

a. Remove the white front case. See 5.1 in 'Routine Maintenance'.
b. Lower the control box assembly by undoing the securing screws at the top of the control box.
c. Close the central heating flow and return isolating valves, release the system pressure by operating the pressure relief valve drain the appliance by removing the drain plug on the underside of the pump manifold.
d. Undo the flexible pipe connection on the side of the pump manifold and remove the grommet. Push the flexible pipe through the hole in the back panel.
e. For rear outlet flues remove the flue elbow (4 screws) and withdraw the complete flue assembly from the wall. Short side outlet flues may also require removal of the flue system.
f. Remove the top expansion vessel securing bracket assembly (four screws) and slide the vessel (complete with flexible pipe) upwards out of the appliance.
g. Remove the flexible pipe from the old vessel and refit (using a new sealing washer) to the new expansion vessel (at this stage the pre-charge pressure can be easily checked and corrected if necessary. The pressure should be at least equal to the system pressure at the appliance).
h. Fit the new expansion vessel and re-assemble in reverse order. Ensure that the vessel is located correctly in the lower support bracket. Route the flexible pipe through the hole in the back panel and refit grommet.

***PROCEDURE 2***

If the clearance above the appliance is **less than 300mm** the appliance must be removed from the wall.

a. Remove the complete casing assembly (front, base and sides)
b. Close all the isolating valves, reduce the pressures in the appliance by operating the pressure relief valve. Drain the remaining water in the boiler by removing the drain screws under the pump manifold (C.H.).
c. Lower the control box assembly by undoing the securing screws at the top of the control box.
d. Disconnect the input wiring noting positions of wires and thread wiring out of control panel grommet/s.
e. Check the gas supply is isolated at the gas service cock, (1/4 turn of square head), undo the gas cock union nut and position nut clear of thread. Disconnect the two flexible hoses from the boiler or tank. Take care to collect any water remaining water in a container.
f. Undo the upper isolator valve connections on the C.H. flow, return and Cold water inlet valves. Similarly disconnect hot flow pipe, and pressure relief pipes.
g. Disconnect the flue elbow from the top of the appliance, (4 screws), lift the flue elbow off the boiler connection and rotate the elbow 180° to position the flue clear of the appliance. If a vertical flue system is fitted it will require raising approximately 50mm (2") to allow the boiler to be lifted off its hanging screws.
h. Remove the bottom boiler securing screw then loosen the appliance upper securing screws and lift the boiler off the wall. Place unit face downwards on the floor. Care should be taken not to damage the pressure gauge or electronics.
j. Access can now be made to the expansion vessel. Undo the flexible pipe connection to the vessel and remove the screws retaining the upper expansion vessel bracket to release the vessel from the appliance.
k. Fit a new expansion vessel and re-assemble in reverse order, using a new sealing washer. At this stage it is advisable to check the pre-charge.

## 6.20 Heat Exchanger (See Fig. 23).

a. Perform 5.1 to 5.6 & 5.8 in ‘Routine Maintenance’. Remove the combustion chamber insulation by removing each side panel retaining screw and pulling the complete side panel /insulation assembly forwards. The rear insulation can remain in situ.
b. Close all the isolating valves, reduce the pressures in the appliance by operating the pressure relief valve. Drain the remaining water in the boiler by removing the drain screws under the pump manifold (C.H.). Undo the heat exchanger connection to the auto air vent pipe.
c. Disconnect the electrical connections from the overheat thermostat. The control box should be protected from water spillage.
d. Release the four spring clips retaining the heat exchanger tails by pulling the clip forwards and towards the centre of the appliance and ease the heat exchanger up, out of the housings.
e. The heat exchanger waterways can now be de-scaled or a replacement heat exchanger can be fitted, in which case the overheat thermostat must be transferred to the new heat exchanger.
f. Re-assemble in reverse order. Use a soap solution to lubricate the new ‘O’ rings when fitting the new heat exchanger, also, ensure the heat exchanger is pushed fully down. Re-charge the system as described in section 1.6 and check the joints for leaks.

## 6.21 Automatic Air Vent (See Fig. 30)

a. Remove the white front case, base panel and white left hand side panel. See 5.1, 5.2 & 5.3 in 'Routine Maintenance'.
b. Close the central heating isolating valves, reduce the system pressure by opening the pressure relief valve, then part drain the water from the boiler by opening the bleed valve on the right hand side of the diverter valve.
c. Using a spanner to prevent the retaining nut from rotating unscrew the auto air vent and remove from the appliance. If there is insufficient space, removal will be eased if the complete auto air vent and pipe assembly is disconnected from the heat exchanger and then raised above the top of the air box. To do this the fan and fluehood will need to be removed, see 5.4 & 5.5 in 'Routine Maintenance'
d. Fit new air vent and sealing washer **ensuring the air vent cap is left loose.**
Re-assemble in reverse order, ensure that the grommet is correctly positioned. Re-charge the system as described in section 1.6 and check for leaks.

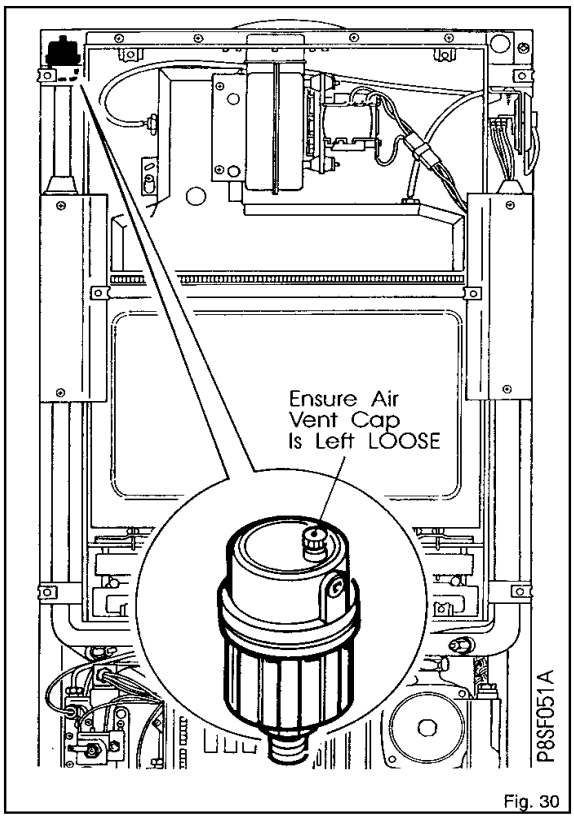

Fig. 30

## 6.22 Pressure Relief Valve (See Fig. 31)

a. Remove the white front case and base panel.
See 5.1 & 5.2 in 'Routine Maintenance'.
b. Close the central heating isolating valves, reduce the system pressure by opening the pressure relief valve, then drain the water from the appliance by removing the drain off screw on the underside of the pump manifold.
c. Undo the outlet tube nut and fully remove the two grub screws holding the pressure relief valve to the pump manifold, undo the top compression joint on the pressure relief valve discharge pipe then remove the valve.

**Note:** The outlet of the pressure relief valve is an olive connection.

d. Fit the new pressure relief valve using a new 'O' ring seal and soap solution as a lubricant. Re-assemble in reverse order.
e. Recharge the system as described in section 1.6 and check for leaks.

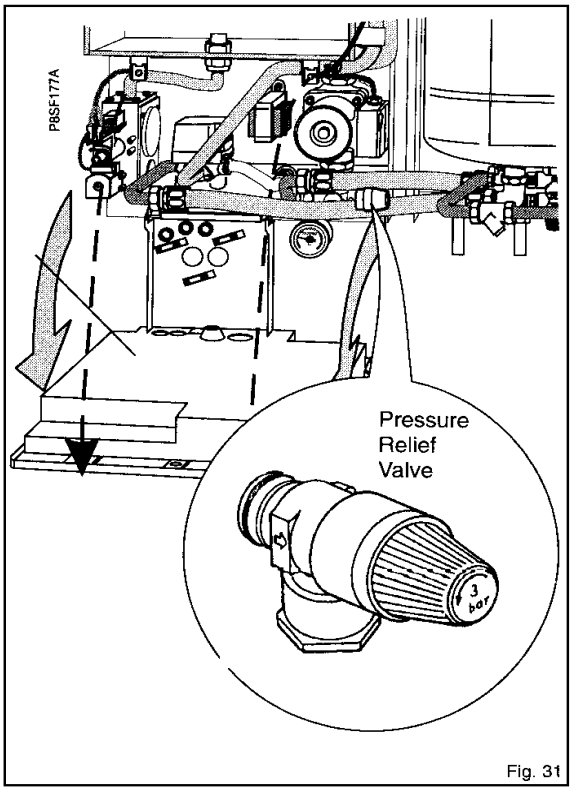

Fig. 31

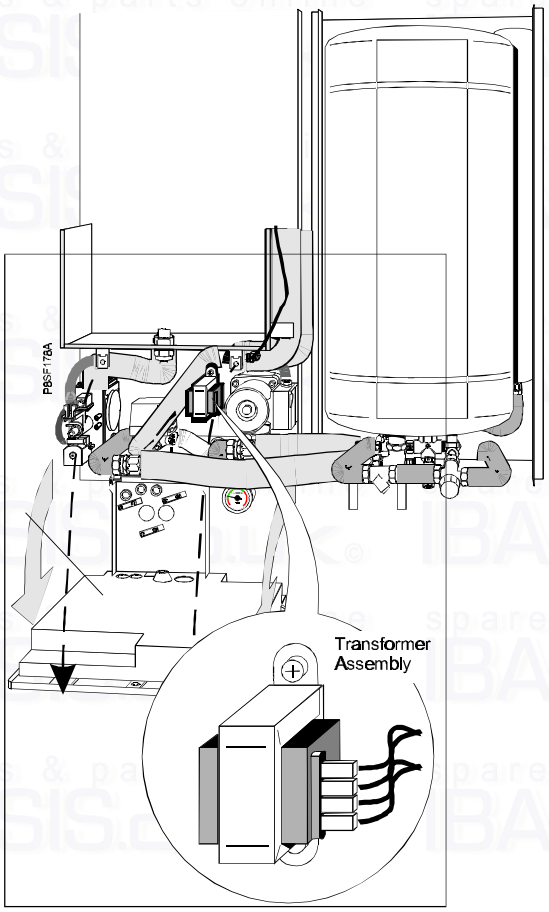


## 6.23 Transformer Assembly

(See Fig. 32)

a. Remove the white front case and base panel. See 5.1 & 5.2 in 'Routine Maintenance'.
b. Lower the control panel assembly by undoing the securing screw at the top right hand side of the control panel.
c. Note how they fit and remove the four connectors from the transformers.
d. Remove the two screws retaining the transformer to the back panel and remove transformer from appliance.
e. Fit the new transformer assembly in reverse order.

spares & parts online IBASIS.CO.UK

# 7. Fault Finding - Page 41

Before attempting any electrical fault finding, carry out a preliminary electrical test by checking: for short circuits, fuse failure, incorrect polarity, earth continuity and resistance to earth. For replacement of fault component, (see Section - Component Replacement). To assist in fault-finding, the logic sequence of the electronics control circuit precedes the fault-finding charts.

**Preliminary Actions:**

**A)** Set Boiler Switch to Stand-by.
**B)** Set Heating Switch to 'OFF' (centre).
**C)** Set C.H. Temp Control to MAX.
**D)** Turn OFF all Hot Water Taps.
**E)** Ensure all isolating valves at the base of the appliance are OPEN.
**F)** Turn ON EXTERNAL GAS & ELECTRICAL supplies.
**G)** Arrange for system controls to be calling for heat.

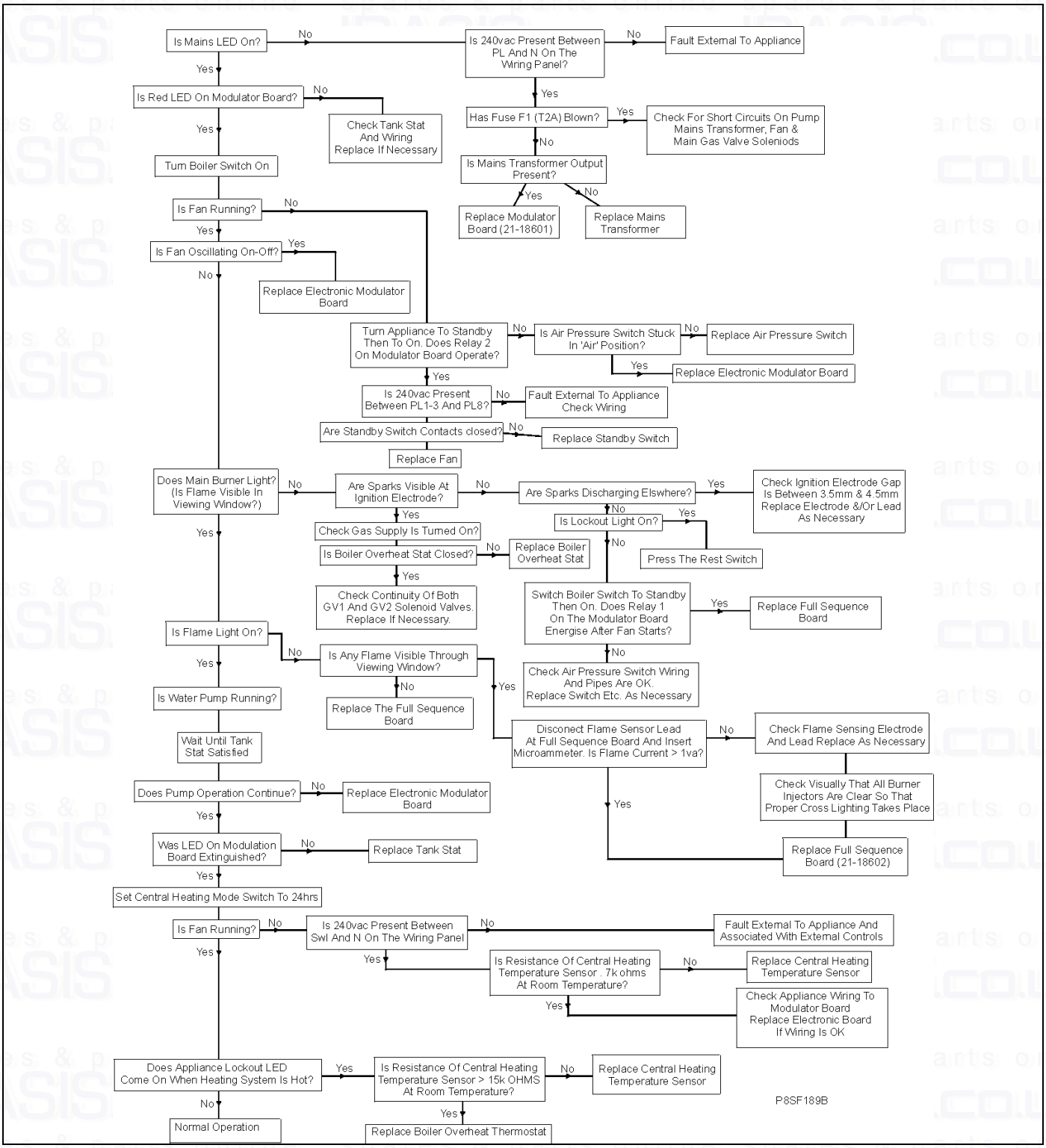

# 8. Control Flow Sequence - Page 42

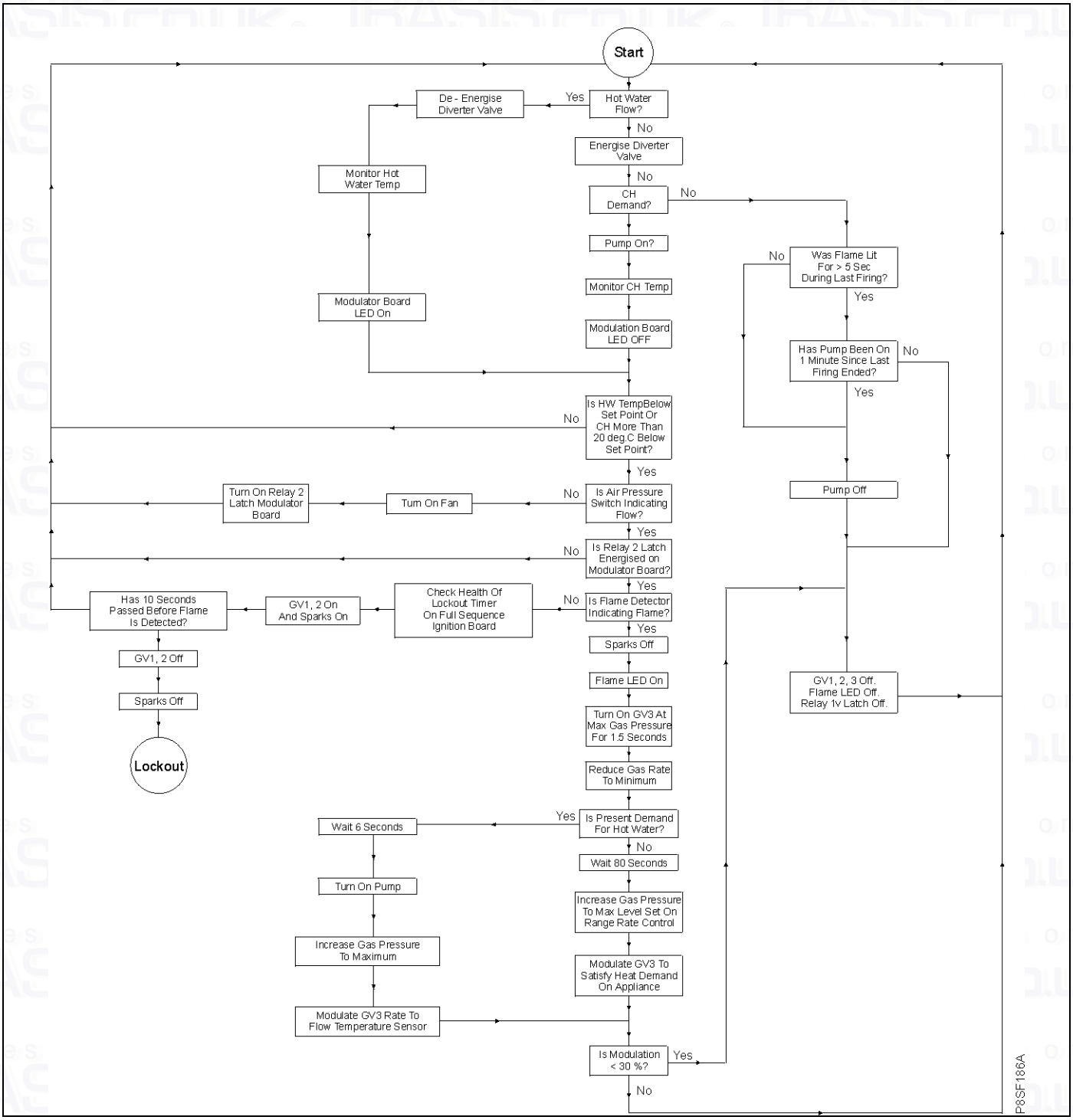


spares & parts online IBASIS.co.uk©

# 9. Functional Flow - Page 43

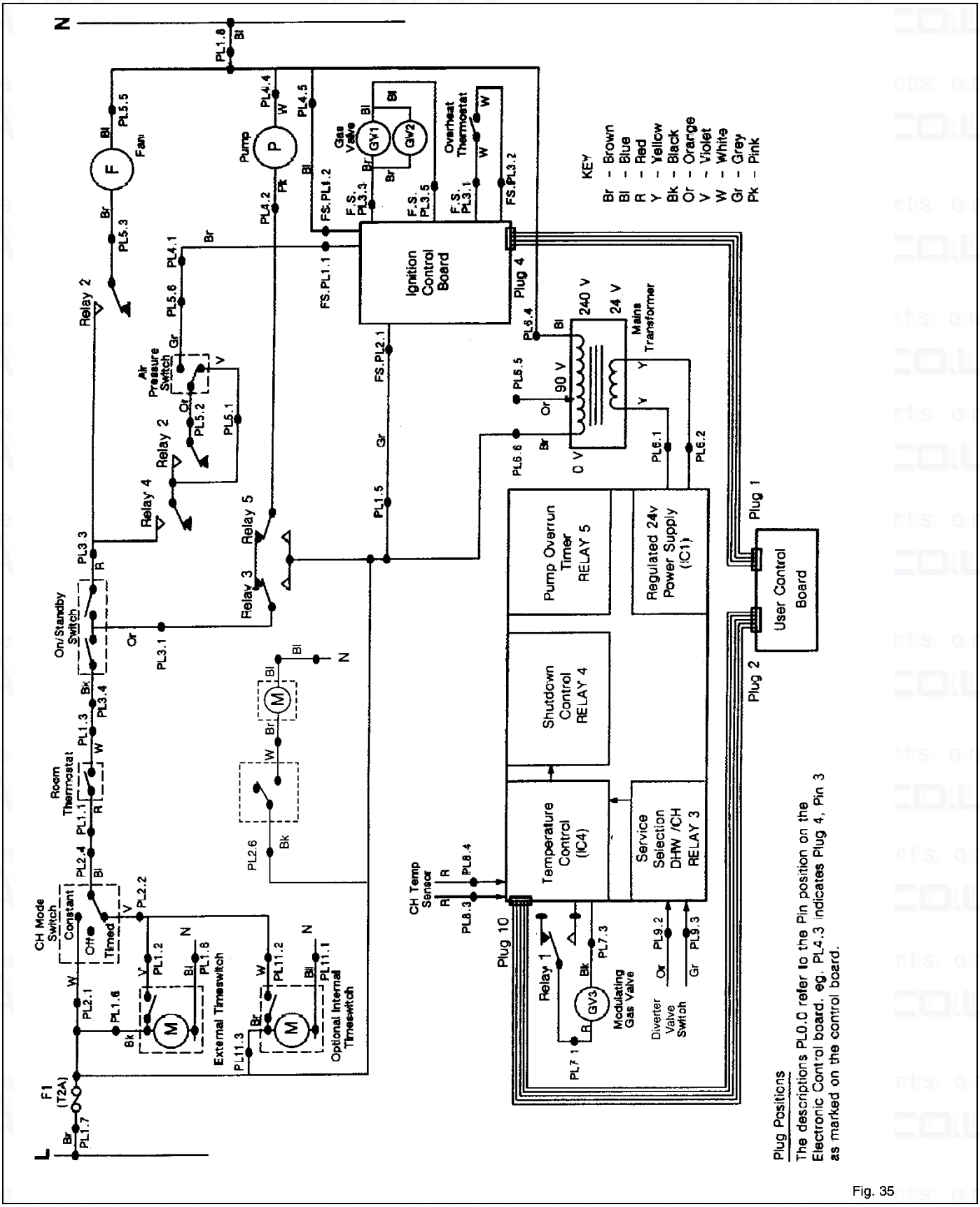


Fig. 35

IBASIS.CO.UK spares & parts online

# 10. Pictorial Wiring Diagram - Page 44

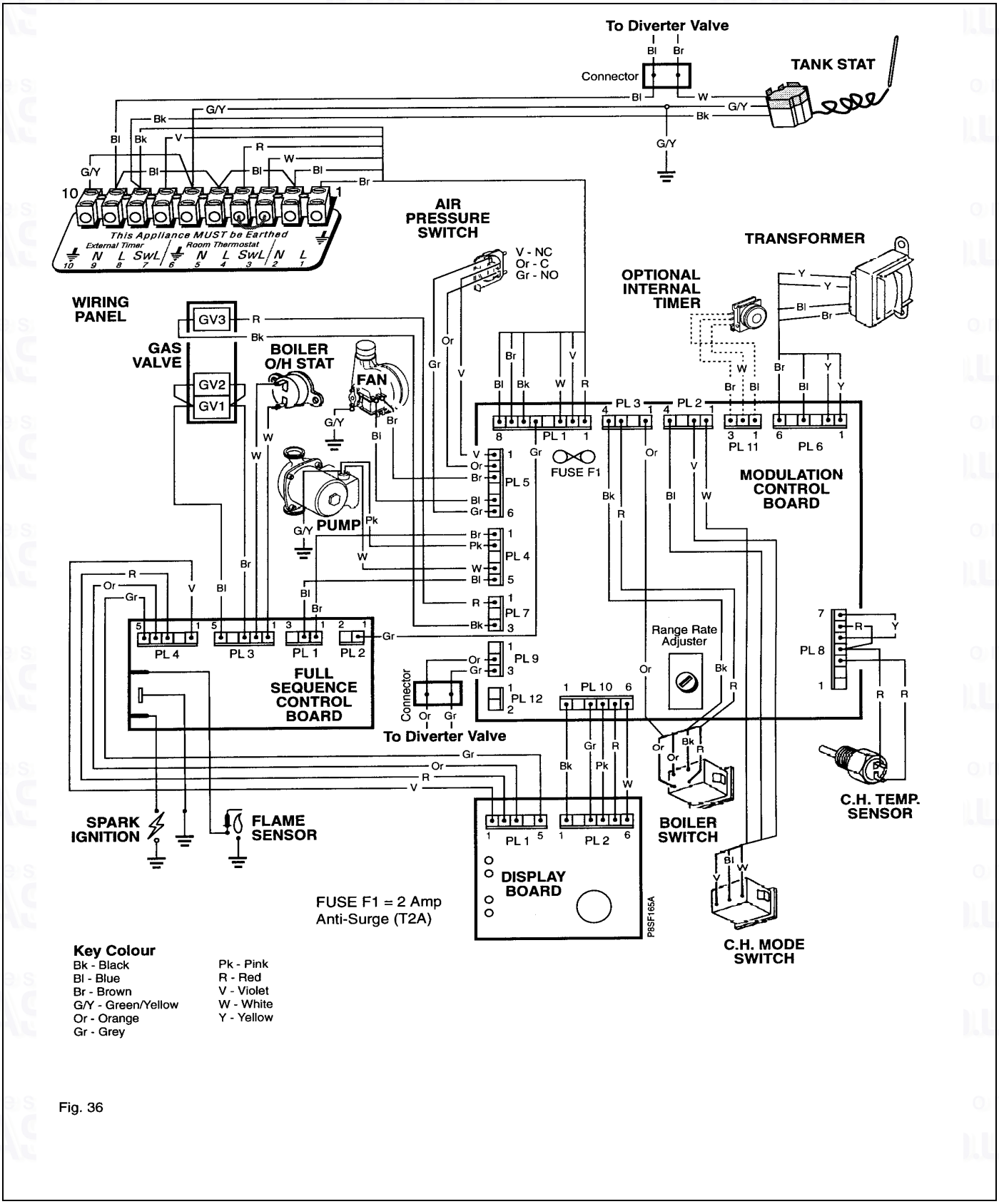


Fig. 36

# 11. Electrical Diagram - Page 45

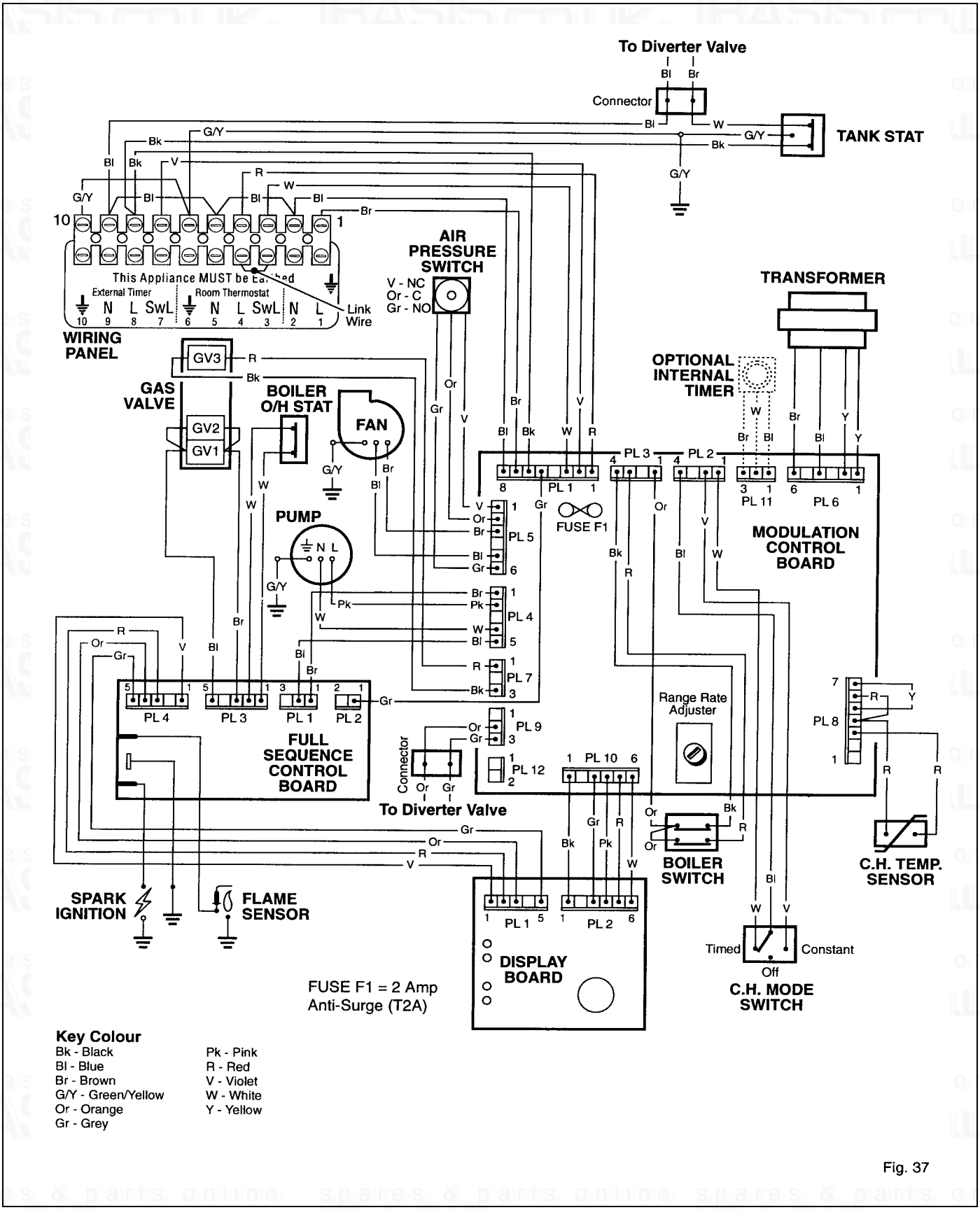


Fig. 37

# 12. Short List of Spares - Page 46

| Item | Description | Qty | Potterton Part No. | Gas Council Part No. |
|---|---|---|---|---|
| 1 | Modulation Control Board | 1 | 21/20324 | |
| 2 | Display Board | 1 | 21/20323 | |
| 3 | Full Sequence Control Board | 1 | 21/18602 | |
| 4 | Pump Kit (Myson Compact) | 1 | 10/18709 | |
| 5 | Main Burner Assembly | 1 | 10/20162 | |
| 6 | Transformer | 1 | 21/19646 | |
| 7 | Electrode | 1 | 10/20179 | |
| 8 | Pressure Relief Valve - 3 bar | 1 | 10/18828 | |
| 9 | Gas Valve - SIT | 1 | 10/18682 | |
| 10 | Pressure Gauge | 1 | 10/18769 | |
| 11 | Burner Injector | 3 | 22/20207 | |
| 12 | Air Flow Switch | 1 | 10/18752 | |
| 13 | Diverter Valve | 1 | 10/20319 | |
| 14 | Fan Assembly | 1 | 10/18750 | |
| 15 | Electrode Lead Assembly | 1 | 21/19660 | |
| 16 | Detection Lead Assembly | 1 | 21/18840 | |
| 17 | Flow Temperature Sensor | 1 | 10/18761 | |
| 18 | 'O' Rings | 2 | 929632 | 285 572 |
| 19 | Flow Limit Thermostat (36TE21-12785) | 1 | 10/18735 | |
| 20 | Tank Thermostat | 1 | 10/20503 | |

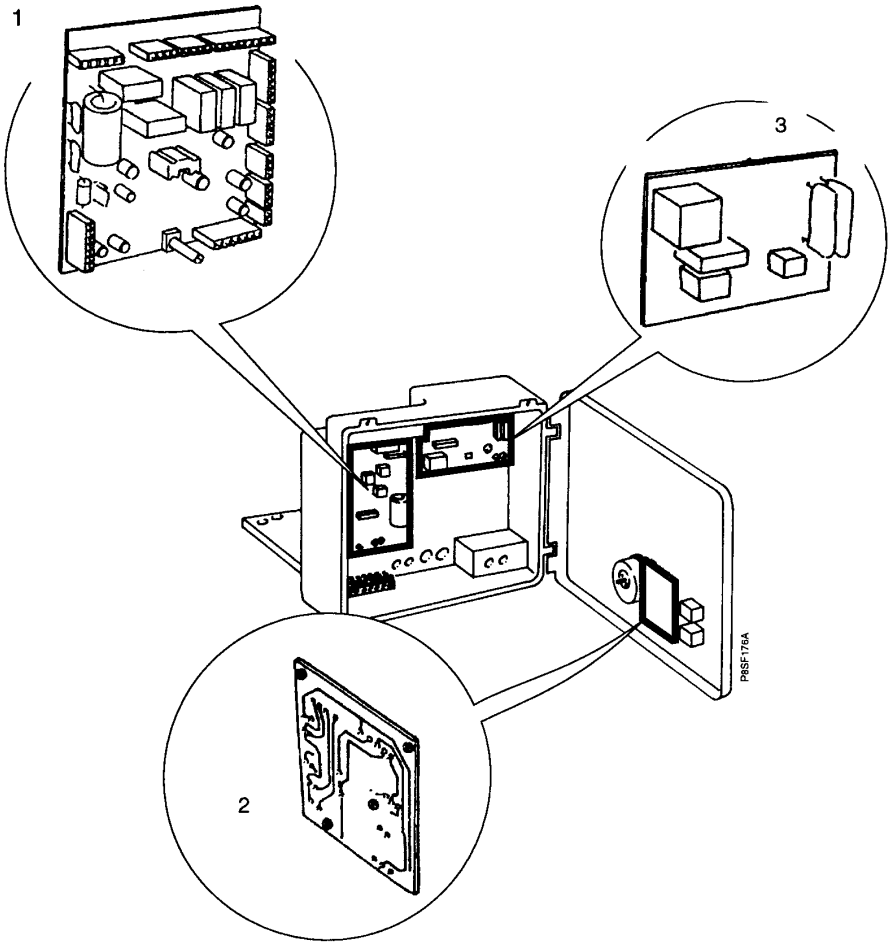


Fig. 38

IBASIS.CO.UK spares & parts online

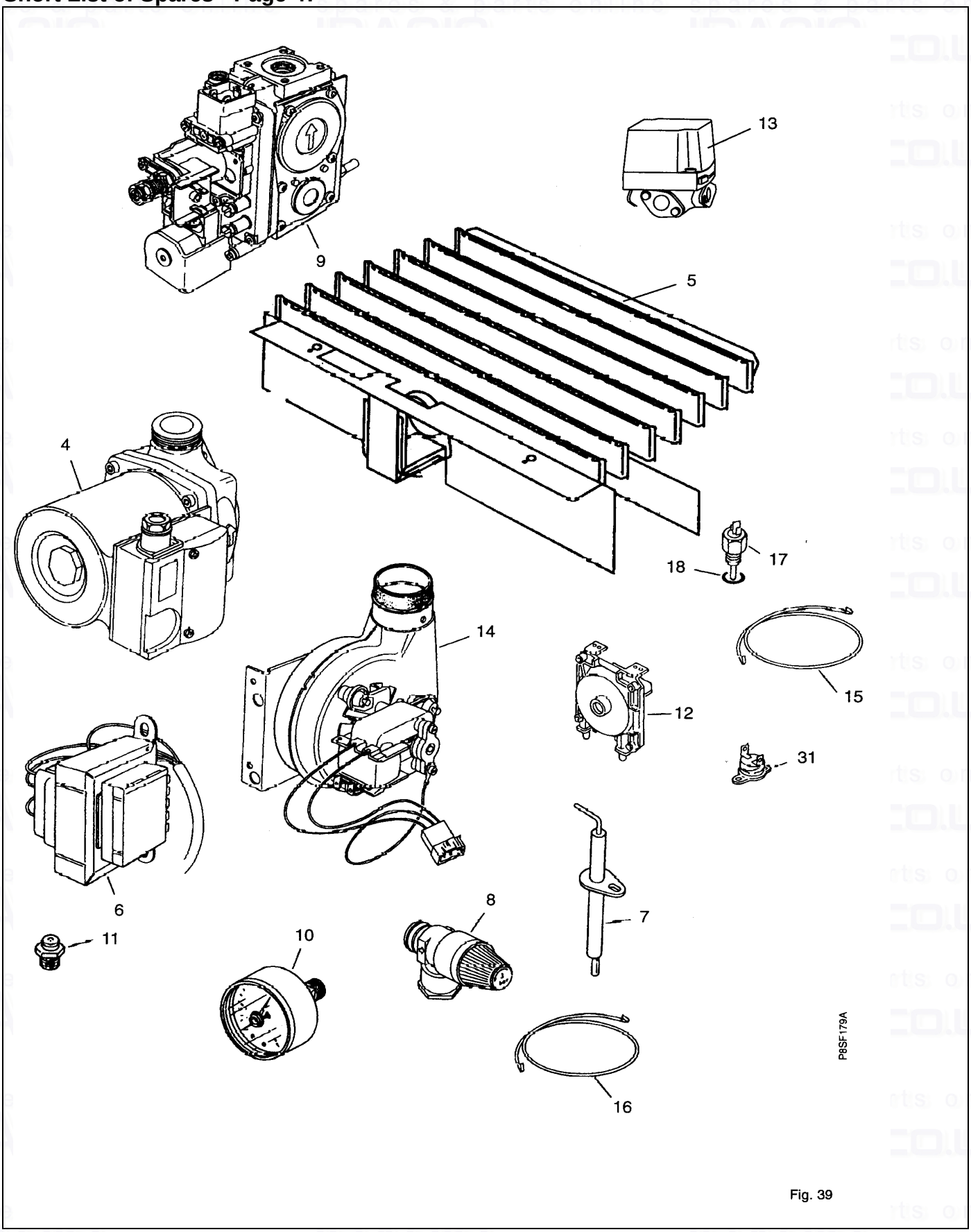


Fig. 39

Back page

IBASIS.CO.UK spares & parts online