Installation & Service Instructions

Promax System HE

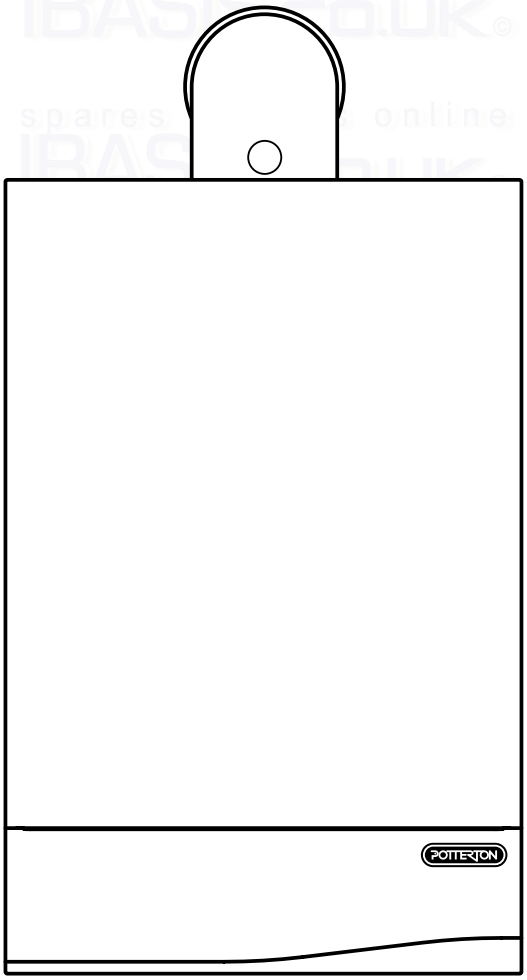

This is a Wall Mounted Powered Flue Condensing Boiler Gas Fired Central Heating Unit.

The boiler meets the requirements of Statutory Instrument " The Boiler (Efficiency) Regulations 1993 N° 3083" and is deemed to meet the requirements of Directive 92/42/EEC on the energy efficiency requirements for new hot water boilers fired with liquid or gaseous fuels:-

Type test for purpose of Regulation 5 certified by:
Notified Body 0086.

Product/Production certified by:
Notified Body 0086.

For use with Natural Gas (G20) only at 20mbar and for use in GB/IE only.

Natural Gas

Potterton Promax System HE
G.C.N° 41 590 69

spares & parts online IBASIS.CO.UK

CONTENTS

Section		Page
0.0	Legislation	4
1.0	Introduction	5
2.0	General Layout	6
3.0	Appliance Operation	7
4.0	Technical Data	8
5.0	Dimensions and Fixings	9
6.0	System Details	10
7.0	Site Requirements	13
8.0	Installation	18
9.0	Electrical	24
10.0	Commissioning	26
11.0	Outer Case	27
12.0	Servicing	28
13.0	Changing Components	30
14.0	Short Parts List	39
15.0	Fault Finding	40

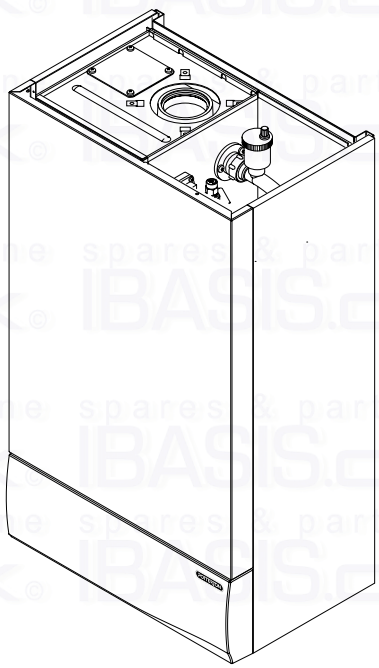

IMPORTANT - Installation, Commissioning, Service & Repair

This appliance must be installed in accordance with the manufacturer's instructions and the regulations in force. Read the instructions fully before installing or using the appliance.

In GB, this must be carried out by a competent person as stated in the Gas Safety (Installation & Use) Regulations.

Definition of competence: A person who works for a CORGI registered company and holding current certificates in the relevant ACS modules, or valid ACoP equivalents, is deemed competent.

In IE, this must be carried out by a competent person as stated in I.S. 813 "Domestic Gas Installations".

Lifting - This product should be lifted and handled by two people. Stooping should be avoided and protective equipment worn where necessary. Carrying & lifting equipment should be used as required.

The addition of anything that may interfere with the normal operation of the appliance without express written permission from the manufacturer or his agent could invalidate the appliance warranty. In GB this could also infringe the Gas Safety (Installation and Use) Regulations.

Warning - Check the information on the data plate is compatible with local supply conditions.

"Benchmark" Log Book

As part of the industry-wide "Benchmark" initiative all Potterton boilers now include an Installation, Commissioning and Service Record Log Book. Please read the Log Book carefully and complete all sections relevant to the appliance and installation. These include sections on the type of controls employed, flushing the system, burner operating pressure etc. The details of the Log Book will be required in the event of any warranty work. Also, there is a section to be completed at each subsequent regular service visit. The Log Book must be left with the user.

All CORGI registered installers carry a CORGI identification card and have a registration number. Both should be recorded in your boiler Log Book. You can check your installer is registered by telephoning +44 (0)1256 372300 or writing to:-

1 Elmwood,
Chineham Business Park,
Crockford Lane,
Basingstoke. RG24 8WG

0.0 LEGISLATION

Potterton declare that no substances harmful to health are contained in the appliance or used during appliance manufacture.

The appliance is suitable only for installation in GB and IE and should be installed in accordance with the rules in force, and only used in a suitably ventilated location.

In GB, the installation must be carried out by a CORGI Registered Installer. It must be carried out in accordance with the relevant requirements of the:

- Gas Safety (Installation & Use) Regulations.
- The appropriate Building Regulations either The Building Regulations, The Building Regulations (Scotland), Building Regulations (Northern Ireland).
- The Water Fittings Regulations or Water Byelaws in Scotland.
- The Current I.E.E. Wiring Regulations.

Where no specific instructions are given, reference should be made to the relevant British Standard Code of Practice.

In IE, the installation must be carried out by a competent Person and installed in accordance with the current edition of I.S. 813 'Domestic Gas Installations', the current Building Regulations and reference should be made to the current ETCI rules for electrical installation.

All systems must be thoroughly flushed and treated with inhibitor (see section 6.2).

Codes of Practice, most recent version should be used

In GB the following Codes of Practice apply:

Standard	Scope
BS 6891	Gas Installation.
BS 5546	Installation of hot water supplies for domestic purposes.
BS 5449	Forced circulation hot water systems.
BS 6798	Installation of gas fired hot water boilers.
BS 5440 Part 1	Flues.
BS 5440 Part 2	Ventilation.
BS 7074	Expansion vessels and ancillary equipment for sealed water systems.
BS 7593	Treatment of water in domestic hot water central heating systems.

In IE the following Codes of Practice apply:

Standard	Scope
I.S. 813	Domestic Gas Installations.

The following BS standards give valuable additional information;

BS 5546	Installation of hot water supplies for domestic purposes.
BS 5449	Forced circulation hot water systems.
BS 7074	Expansion vessels and ancillary equipment for sealed water systems.
BS 7593	Treatment of water in domestic hot water central heating systems.

1.0 INTRODUCTION

1.1 Description

1. The Potterton Promax System HE is a gas fired room sealed fan assisted condensing central heating system boiler.

2. The maximum output of the boiler is preset at 75,000 Btu/hr. The boiler will automatically adjust down to 30,000 Btu/hr according to the system load. If required, the output can be set to 100,000 Btu/hr. Please refer to section 8.7.

3. It is designed for use on Natural Gas (G20).

4. The boiler is suitable for sealed central heating and domestic hot water systems.

5. A label giving details of the model, serial number and Gas Council number is situated on the rear of the lower door panel (Fig. 1).

6. The boiler data badge is positioned on the air box door (Fig. 2).

7. The boiler is intended to be installed in residential / commercial / light industrial E.M.C. environments on a governed meter supply only.

8. The boiler must be installed with one of the purpose designed flues such as the standard horizontal flue kit, part nº 236921.

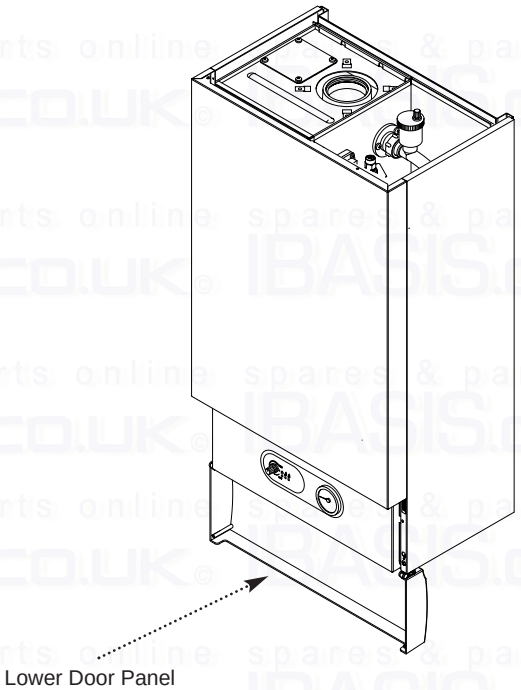

Fig. 1

1.2 Optional Extras

KIT	PART Nº
FLUE EXTENSION KITS (110/70)	
Flue Extension 0.25M	241692
Flue Extension 0.5M	241694
Flue Extension 1M (Use two kits for 2M etc.)	241695
Flue Bend x 2 - 45° (Reduce overall length of flue by 0.5m when fitting this bend)	241689
Flue Bend - 90° (Reduce overall length of flue by 1m when fitting each bend)	241687
VERTICAL FLUE (110/70)	
Vertical Flue Terminal	242802
Vertical Flue Adaptor	5106888
VERTICAL FLUE (80/80)	
Kit Boiler Connection Twin	242757

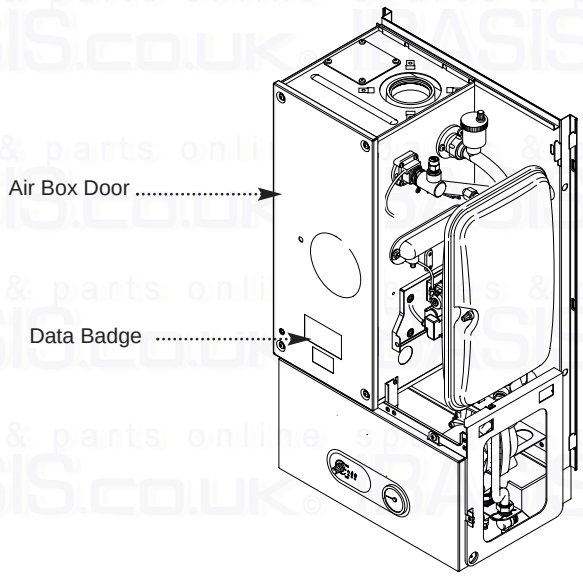

Fig. 2

2.0 GENERAL LAYOUT

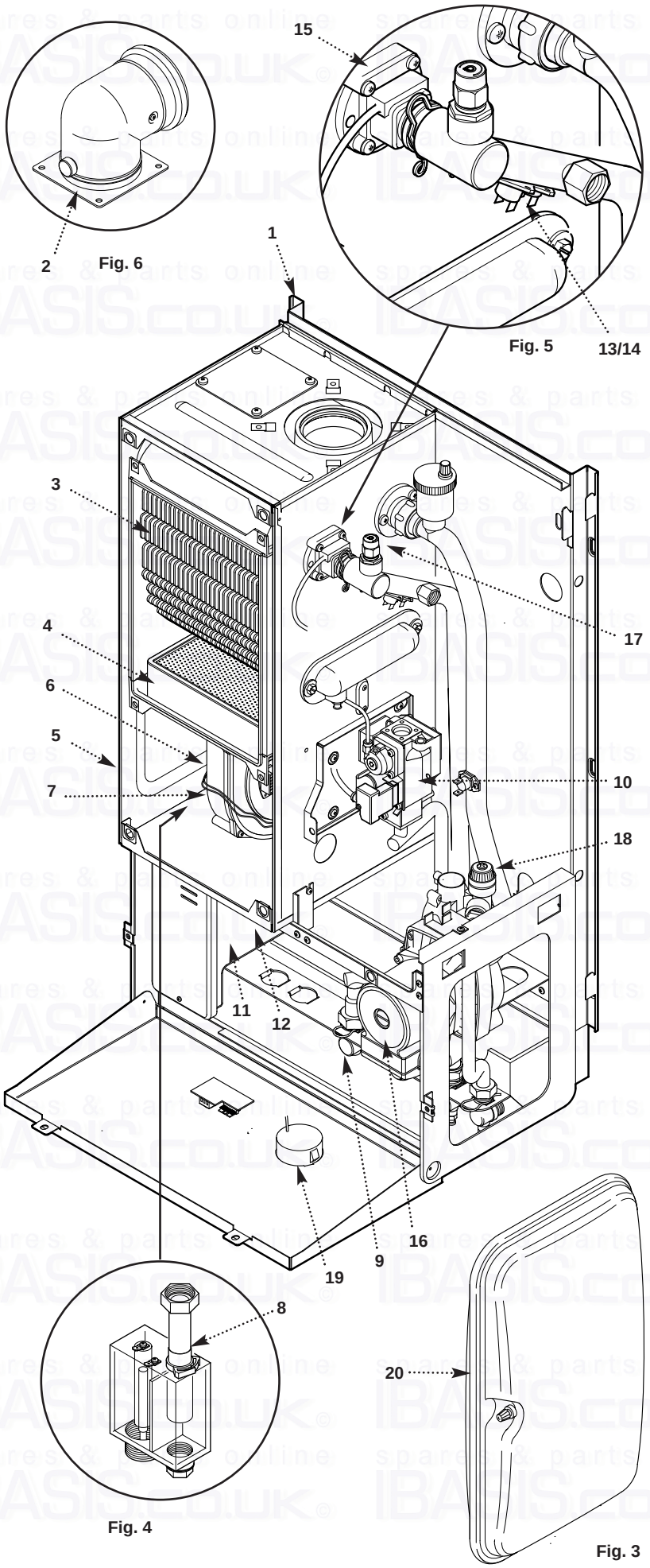

2.1 **Layout** (Figs. 3,4 & 5)

1. Wall Plate
2. Flue Elbow
3. Heat Exchanger
4. Burner
5. Air Box
6. Fan Protection Thermostat
7. Fan Assembly
8. Condensate Trap
9. Gas Tap
10. Gas / Air Ratio Valve
11. Electronics Housing
12. Transformer
13. Flow Temperature Safety Thermostat - Black
14. Flow Temperature Thermistor - Red
15. Flow Switch (dry fire protection)
16. Circulation Pump
17. Automatic Air Vent
18. Pressure Relief Valve
19. Water Pressure Gauge
20. Expansion Vessel

spares & parts online IBASIS.CO.UK

3.0 APPLIANCE OPERATION

3.1

1. **Switched Live On:** When the switched live switches on pump overrun occurs.

2. **Pump Overrun:** The pump is on while the fan, spark generator and gas valve are off. If at any stage during pump overrun the flow temperature is less than the set point and the flow switch is made then fan purge occurs. After 1 minute of pump overrun anti-cycle occurs.

3. **Fan Purge:** The pump and fan are on while the spark generator and gas valve are off. After 5 seconds ignition occurs.

4. **Ignition:** The pump, fan, spark generator and gas valve are on. If a flame is detected then burner on occurs. If a flame is not detected within 5 seconds and less than 5 ignition attempts have been made then fan purge occurs. If a flame is not detected within 5 seconds and 5 ignition attempts have been made the ignition lockout occurs.

5. **Burner On:** The pump, fan and gas valve are on while the spark generator is off. Flow temperature is controlled by varying the fan speed (and thereby the gas rate) to achieve optimum operation. If the flow temperature is greater than the set point then pump overrun occurs. If the TRVs all shut down then anti-cycle occurs.

6. **Anti-cycle:** The pump, fan, spark generator and gas valve are switched off. After 3 minutes pump overrun occurs.

7. **Ignition Lockout:** The pump, fan, spark generator and gas valve are switched off. The boiler can only be reset by manually using the thermostat knob.

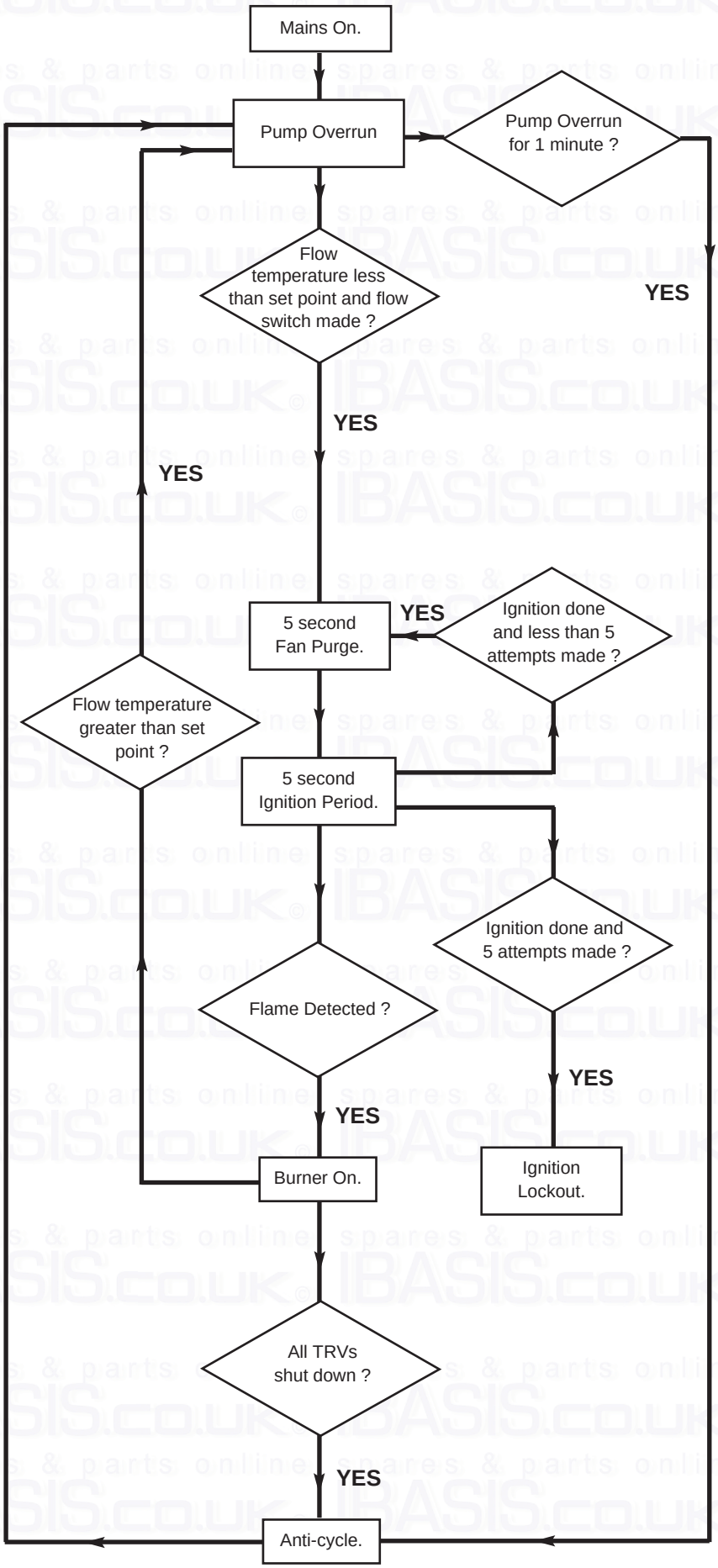

4.0 TECHNICAL DATA

Appliance Type		C_{13}	C_{33}
Appliance Category	CAT I $_{2H}$		
Heat Input		Max	Min
	kW	33.76	10.2
	Btu/h	115,200	34,840
Heat Output (Non Condensing 70° C Mean Water Temp)		Max	Min
	kW	30.18	9.14
	Btu/h	102,980	31,180
Heat Output (Condensing 40° C Mean Water Temp)		Max	Min
	kW	32.61	10.1
	Btu/h	111,280	34,520
Max Gas Rate	(Natural Gas) (After 10 Mins)		
	Btu/hr	102,980	75,000
	m^3/h	2.95	2.36
	ft^3/h	104.2	83.3
Inlet Pressure (Natural Gas)			
	Min	18.1 mbar	
	Max	22.5 mbar	
	(see Section 10.1)		
Injector (Natural Gas)	6.3mm Diameter		
Nox Class	5		
Horizontal Flue Terminal Dimensions	Diameter	110mm	
	Projection	150mm	

Connections		copper tails
Gas Supply	-	22mm
Central Heating Flow	-	22mm
Central Heating Return	-	22mm
Pressure Relief Discharge	-	15mm
Condensate Drain	-	1 in BSP
Outercase Dimensions		
Overall Height Inc Flue Elbow	-	1000mm
Casing Height	-	850mm
Casing Width	-	490mm
Casing Depth	-	325mm

Clearances
(For unventilated compartments see Section 7.5)

Both Sides	5mm Min
Above Casing	200mm Min
Below Casing	200mm Min
Front (For Servicing)	500mm Min
Front (In Operation)	5mm Min

Weights	kg	lb
Packaged Boiler Carton	54.7	120.6
Packaged Flue Kit	3.6	8.0
Weight Empty	49.4	108.9
Installation Lift Weight	41	90.4

Recommended System Temperature Drop

Normal	11°C	20°F
Condensing	20°C	36°F

Central Heating Primary Circuit Pressures

	bar	lb/in²
Safety Discharge	3	43.5
Max Operating	2.5	36.3
Min Operating	1	10.9
Recommend Operating	1-2	14.5-29

Electrical Supply 230V~ 50Hz
(Appliance must be connected to an earthed supply)

Power Consumption 200W

External Fuse Rating 3A

Internal Fuse Rating (BS 4265)
Fuse (2) 4 AT (Control Board)
Fuse (3) 2 AT (Ignition Board)

Water Content

litres	3.5
pints	6.2

Expansion Vessel - (For Central Heating only. Integral with appliance)

	bar	lb/in²
Min Pre-charge Pressure	0.95	13.6
Nominal Pre-charge Pressure	1	14.5
	litre	gal
Max Capacity of CH System	125	27.5

Controls
boiler thermostat, safety thermostat, flow switch, electronic flame sensing, temperature protection thermostat & condensate blockage sensor.

SEDBUK Declaration For Potterton Promax System HE

The seasonal efficiency (SEDBUK) is 90.9 %

This value is used in the UK Government's Standard Assessment Procedure (SAP) for energy rating of dwellings. The test data from which it has been calculated have been certified by 0086.

NOTE: The maximum output of the boiler is factory set at 22.0kW (75,000 Btu/hr). This can be altered to 30.18kW (102,980 Btu/hr) - see section 8.7.

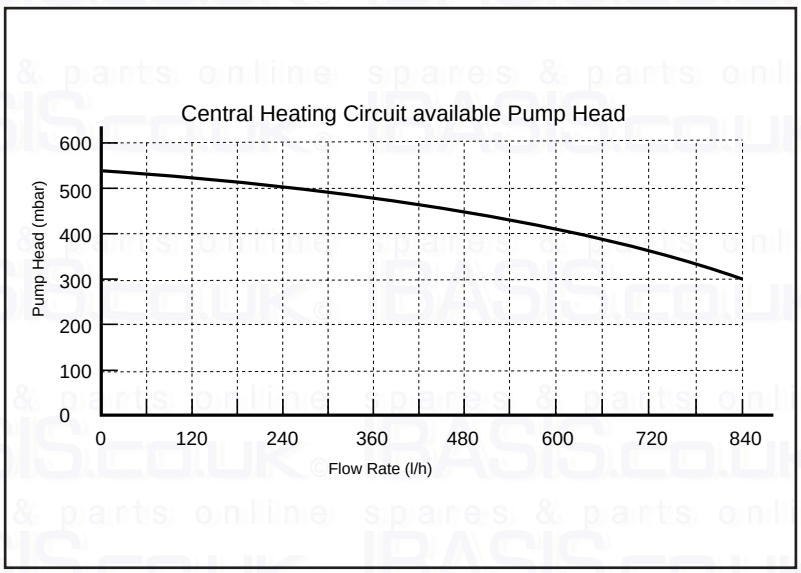

Where flow rates are required in excess of 840 l/h, please refer to page 22.

5.0 DIMENSIONS AND FIXINGS

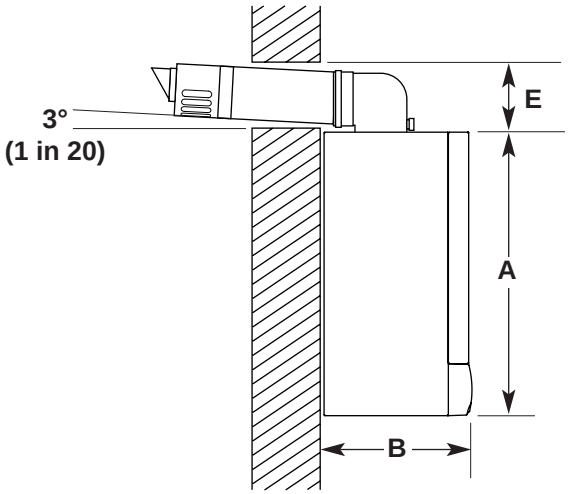

DIMENSIONS
A 850mm
B 325mm
C 490mm
D 125mm Ø Min.
E 150mm
F 125mm

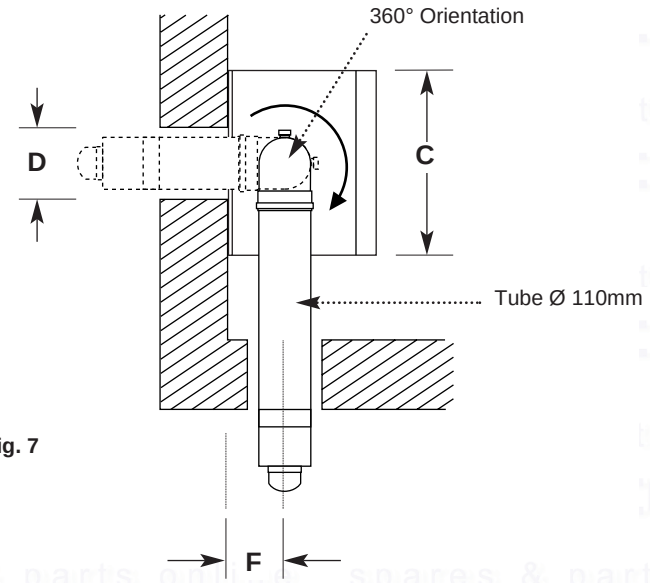

Fig. 7

The 3° (1 in 20) fall provided by the elbow is to allow condensate to run back to the boiler, for disposal through the condensate discharge pipe.

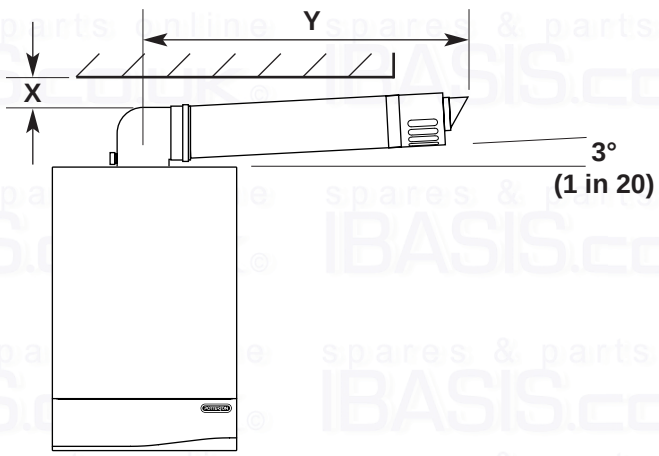

Fig. 8

SIDE FLUE (left and right)

For every 1m of horizontal flue length, the clearance above the top of the flue elbow should be 55mm to incorporate the 3° (1 in 20) fall in the flue from the terminal to the elbow.

Flue length (Y)	Clearance (X)
up to 1m	55mm
1m - 2m	110mm
2m - 3m	165mm

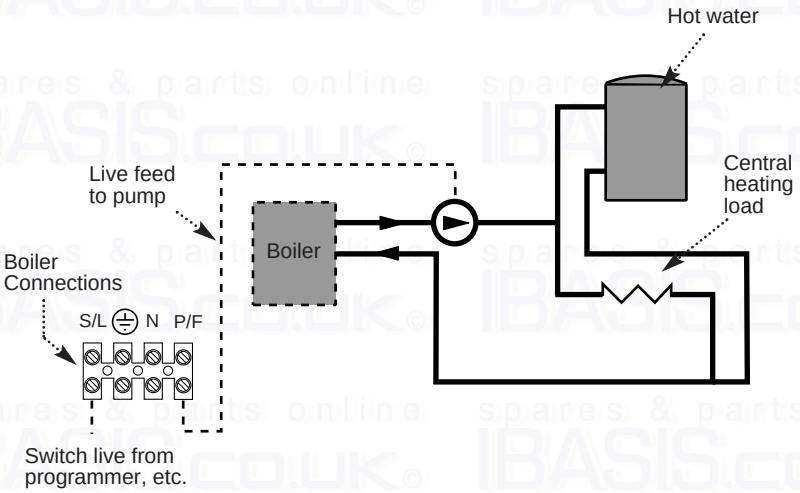

Fig. A Wiring an extra pump to the pump feed connection of boiler

6.0 SYSTEM DETAILS

6.1 Water Circulating Systems

1. The appliance is suitable for fully pumped sealed systems only.

The following conditions should be observed on all systems:

- The boiler must not be used with a direct cylinder.
- Drain cocks should be fitted to all system low points.
- All gas and water pipes and electrical wiring must be installed in a way which would not restrict the servicing of the boiler.
- Air vents should be fitted to all system high points.
- An air rejection separator is recommended to ensure correct operation of all appliance components.

6.2 Treatment of Water Circulating Systems

- All recirculatory water systems will be subject to corrosion unless an appropriate water treatment is applied. This means that the efficiency of the system will deteriorate as corrosion sludge accumulates within the system, risking damage to pump and valves, boiler noise and circulation problems.
- When upgrading existing systems that exhibit evidence of sludging, it is advisable to clean the system prior to treatment in order to remove any sludge and reduce the likelihood of these deposits damaging new components.
- When fitting new systems flux will be evident within the system, which can lead to damage of system components.
- All systems must be thoroughly drained and flushed out. The recommended flushing and cleansing agents are Betz-Dearborn Sentinel X300 or X400 and Fernox Superfloc Universal Cleanser which should be used following the flushing agent manufacturer's instructions.
- System additives - corrosion inhibitors and flushing agents/descalers should be suitable for aluminium and comply to BS7593 requirements. The only system additives recommended are Betz-Dearborn Sentinel X100 and Fernox-Copal which should be used following the inhibitor manufacturer's instructions.

Failure to flush and add inhibitor to the system will invalidate the appliance warranty.

- It is important to check the inhibitor concentration after installation, system modification and at every service in accordance with the manufacturer's instructions. (Test kits are available from inhibitor stockists.)
- For information or advice regarding any of the above contact the Potterton Helpline.

6.3 Pipework

1. The sizes of flow and return pipes from the boiler should be determined by normal methods, according to the requirements of the system. The connection to the boiler is 22mm (copper tail).

2. Due to space requirements at the rear of the tap bracket, pipework should comprise of solder fittings.

3. A 20 °C (36°F) drop in temperature across the system is recommended for condensing boilers. Existing radiators may be oversized and so allow this, but where radiator sizing is marginal it may be advisable to retain a system temperature drop of 11°C (20°F).

4. In systems using non-metallic pipework it is necessary to use copper pipe for the boiler Flow and Return. The copper must extend at least 1 metre from the boiler and include any branches (Fig. 8a).

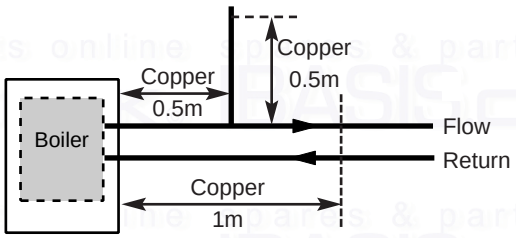

Fig. 8a

6.4 System Controls

1. For optimum operating conditions, the heating system into which the boiler is installed should include a control system.

2. Such a system will comprise of a timer control and separate room or cylinder thermostats as appropriate.

3. The boiler should be controlled so that it operates on demand only.

4. Operation of the system under control of the boiler thermostat & TRV's only does not produce the best results.

6.5 Thermal Stores

1. When the Potterton Promax System HE is fitted in conjunction with a thermal store, jumper 2 must be removed from the Control PCB, see Fig. 32a Section 8.7.

6.0 SYSTEM DETAILS

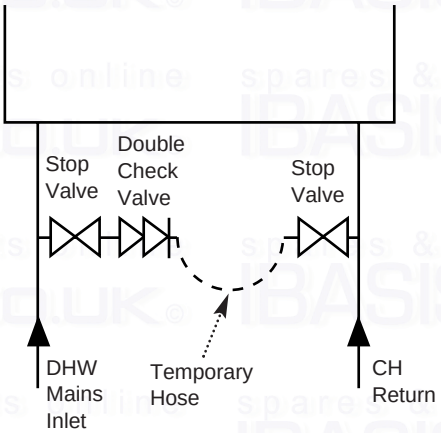

Fig. 9

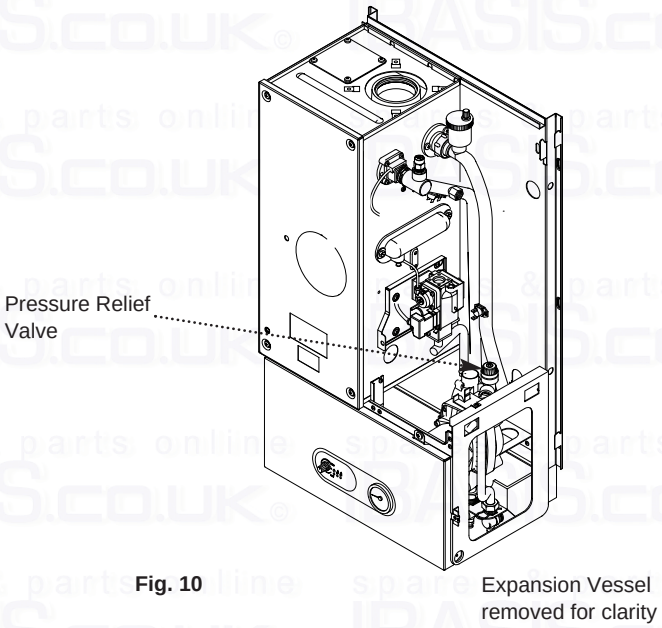

Fig. 10

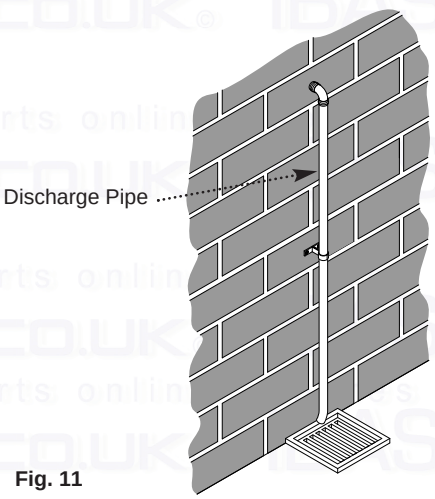

Fig. 11

6.6 System Filling and Pressurising

1. A filling point connection on the central heating return pipework must be provided to facilitate initial filling and pressurising and also any subsequent water loss replacement/refilling.

2. The filling method adopted must be in accordance with the Water Supply (Water Fittings) regulations and the Water Bylaws (Scotland).

3. Your attention is drawn to, for GB: Guidance G24.2 and recommendation R24.2 of the Water Regulations Guide. for IE: the current edition of I.S. 813 “Domestic Gas Installations”.

4. The sealed primary circuits may be filled or replenished by means of a temporary connection between the primary circuit and a supply pipe provided the arrangement in accordance with Diagram R24.2a of the Water Regulations Guide.

5. The temporary hose must be completely removed at both ends after use.

6.7 Expansion Vessel

1. The appliance expansion vessel is pre-charged to 1 bar (10 lb/in^2). Therefore, the minimum cold fill pressure is 1 bar. The vessel is suitable for correct operation for system capacities up to 125 litres (27.5gal). For greater system capacities an additional expansion vessel must be fitted - refer to BS 7074 Pt 1.

6.8 Pressure Relief Valve (Figs. 10 & 11)

1. The pressure relief valve is set at 3 bar, therefore all pipework, fittings, etc. should be suitable for pressures in excess of 3 bar.

2. The pressure relief discharge pipe should be not less than 15mm dia, run continuously downward, and discharge outside the building, preferably over a drain. It should be routed in such a manner that no hazard occurs to occupants or causes damage to wiring or electrical components. The end of the pipe should terminate facing down and towards the wall.

3. The discharge must not be above a window, entrance or other public access. Consideration must be given to the possibility that boiling water/steam could discharge from the pipe.

7.0 SITE REQUIREMENTS

7.1 Location

NOTE: Due to the nature of the boiler a plume of water vapour will be discharged from the flue. This should be taken into account when siting the flue terminal.

1. The boiler may be fitted to any suitable wall with the flue passing through an outside wall or roof and discharging to atmosphere in a position permitting satisfactory removal of combustion products and providing an adequate air supply. The boiler should be fitted within the building unless otherwise protected by a suitable enclosure i.e. garage or outhouse. (The boiler may be fitted inside a cupboard - see Section 7.5).

2. If the boiler is sited in an unheated enclosure then it is recommended to incorporate in the system controls a suitable device for frost protection.

3. If the boiler is fitted in a room containing a bath or shower reference must be made to the relevant requirements.
In GB this is the current I.E.E. Wiring Regulations and Building Regulations.
In IE reference should be made to the current edition of I.S. 813 “Domestic Gas Installations” and the current ETCI rules.

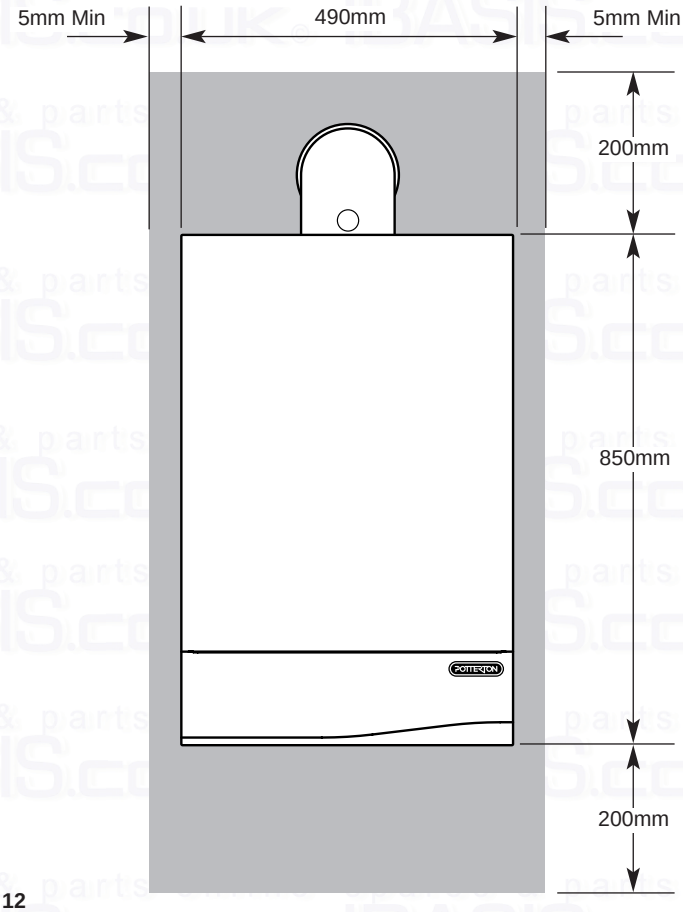

Fig. 12

If the boiler is to be fitted into a building of timber frame construction then reference must be made to the current edition of Institute of Gas Engineers Publication IGE/UP/7 (Gas Installations in Timber Framed Housing).

7.2 Clearances (Figs. 12 &13)

1. A flat vertical area is required for the installation of the boiler.

2. These dimensions include the necessary clearances around the boiler for case removal, spanner access and air movement. Additional clearances may be required for the passage of pipes around local obstructions such as joists running parallel to the front face of the boiler.

3. For unventilated compartments see Section 7.5.

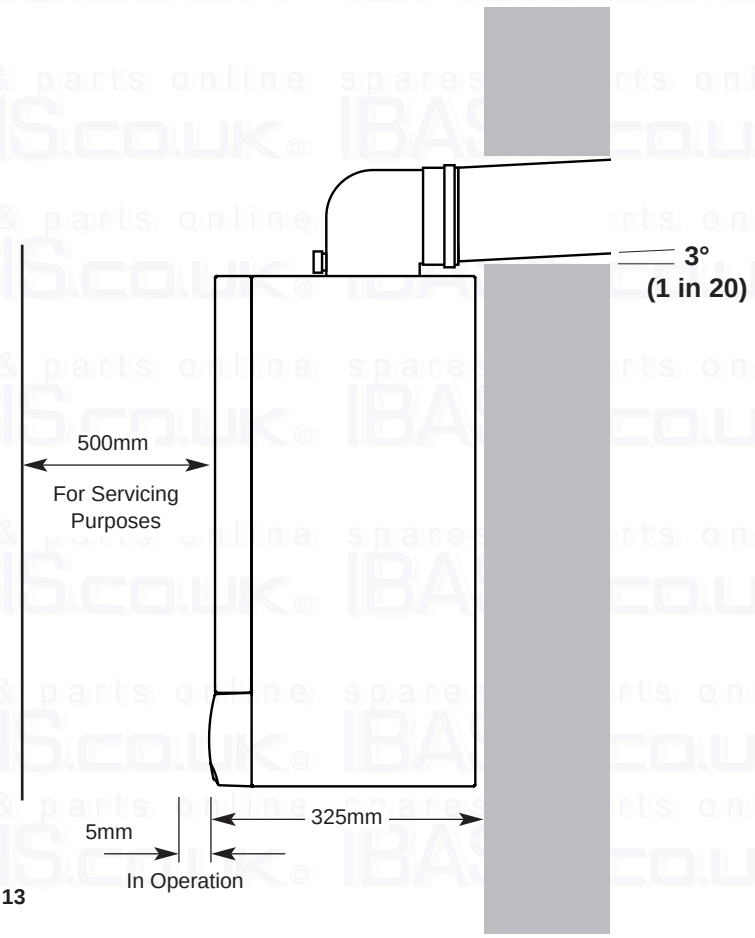

Fig. 13

7.0 SITE REQUIREMENTS

7.3 Ventilation of Compartments

1. Where the boiler is installed in a cupboard or compartment, no air vents are required for cooling purposes providing that the minimum dimensions below are maintained.

Sides	25mm
Top	200mm
Bottom	200mm
Front	100mm

2. Any compartment should be large enough to house the boiler only.

7.4 Gas Supply

1. The gas installation should be in accordance with the relevant standards. In GB this is BS 6891. In IE this is the current edition of I.S. 813 “Domestic Gas Installations”.

2. The connection to the appliance is a 22mm copper tail located at the rear of the gas service cock (Fig. 15).

3. Ensure that the pipework from the meter to the appliance is of adequate size.
(22mm recommended at the appliance). **Do not use pipes of a smaller diameter than the boiler gas connection.**

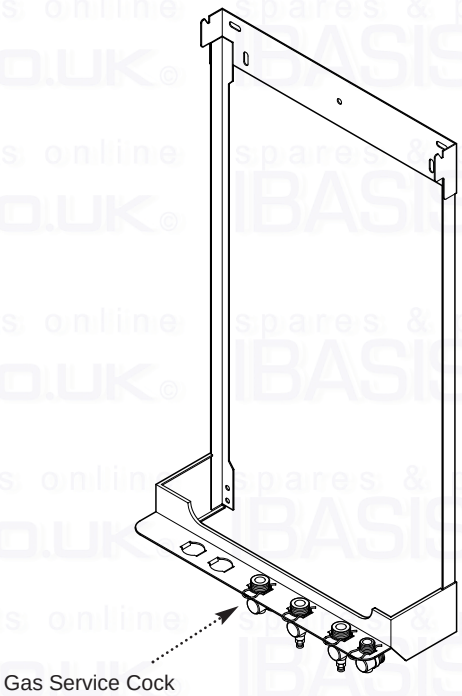

Fig. 15

7.5 Electrical Supply

1. External wiring must be correctly earthed, polarised and in accordance with relevant regulations/rules. In GB this is the current I.E.E. Wiring Regulations. In IE reference should be made to the current edition of ETCI rules.

2. The mains supply is 230V ~ 50Hz fused at 3A.

NOTE: The method of connection to the electricity supply must facilitate complete electrical isolation of the appliance. Connection may be via a fused double-pole isolator with a contact separation of at least 3mm in all poles and servicing the boiler and system controls only.

7.6 Condensate Drain

NOTE: Ensure the discharge of condensate complies with any national or local regulations in force.

1. The condensate outlet terminates in a 1” BSP nut and seal for the connection of 21.5mm (3/4in) plastic overflow pipe which should generally discharge internally into the household drainage system. If this is not possible, discharge into an outside drain is acceptable.

2. **The pipe should run internally as much as possible and with a 10° (1 in 6) fall along its full length to dispose of condensate quickly to avoid freezing.**

7.7 Flue

NOTE: Due to the nature of the boiler a plume of water vapour will be discharged from the flue. This should be taken into account when siting the flue terminal.

1. The following guidelines indicate the general requirements for siting balanced flue terminals. For GB recommendations are given in BS 5440 Pt. 1. For IE recommendations are given in the current edition of I.S. 813 “Domestic Gas Installations”.

2. If the terminal discharges onto a pathway or passageway, check that combustion products will not cause a nuisance and that the terminal will not obstruct the passageway.

3. Take into consideration the effect the plume of vapour may have on neighbours when siting the flue.

4. Adjacent surfaces close to the flue terminal may need protection from the effects of condensation. Alternatively a flue deflector kit (part no. 248167) is available.

5. For installation of the flue into an internal corner at the 25mm dimension the flue deflector kit (part no. 248167) must be fitted.

6. * Reduction to the boundary is possible down to 25mm but the flue deflector kit (part no. 248167) must be fitted.

7. For fitting under low sofits and eaves it is acceptable for the flue to project upto 500mm from the face of the wall to the inside of the air intake. This can be painted if required using a suitable external paint.

8. If a terminal is less than 2 metres (78¾ in) above a balcony, above ground or above a flat roof to which people have access, then a suitable terminal guard must be provided.

Terminal Position with Minimum Distance (Fig. 17)		(mm)
A[a]	Directly below an opening, air brick, opening windows, etc.	300
B[a]	Above an opening, air brick, opening window etc.	300
C[a]	Horizontally to an opening, air brick, opening window etc.	300
D	Below gutters, soil pipes or drain pipes.	25
E	Below eaves.	25
F	Below balconies or car port roof.	25
G	From a vertical drain pipe or soil pipe.	25
H	From an internal (i) or external (ii) corner.	(i) 25 (ii) 115
I	Above ground, roof or balcony level.	300
J	From a surface facing a terminal.	600
K	From a terminal facing a terminal (Horizontal flue).	1200
	From a terminal facing a terminal (Vertical flue).	600
L	From an opening in carport (e.g. door, window) into the dwelling.	1200
M	Vertically from a terminal on the same wall.	1500
N	Horizontally from a terminal on the same wall.	300
R	From adjacent wall to flue (vertical only).	300
S	From an adjacent opening window (vertical only).	1000

Table. 2

[a] In addition, the terminal should be no nearer than 150 mm to an opening in the building fabric formed for the purpose of accommodating a built-in element such as a window frame. See BS 5440 Pt. 1.

NOTE: The distance from a fanned draught appliance terminal installed parallel to a boundary may not be less than 300mm in accordance with the diagram below

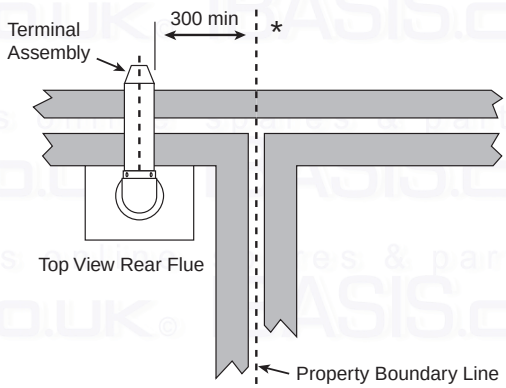

Fig. 16

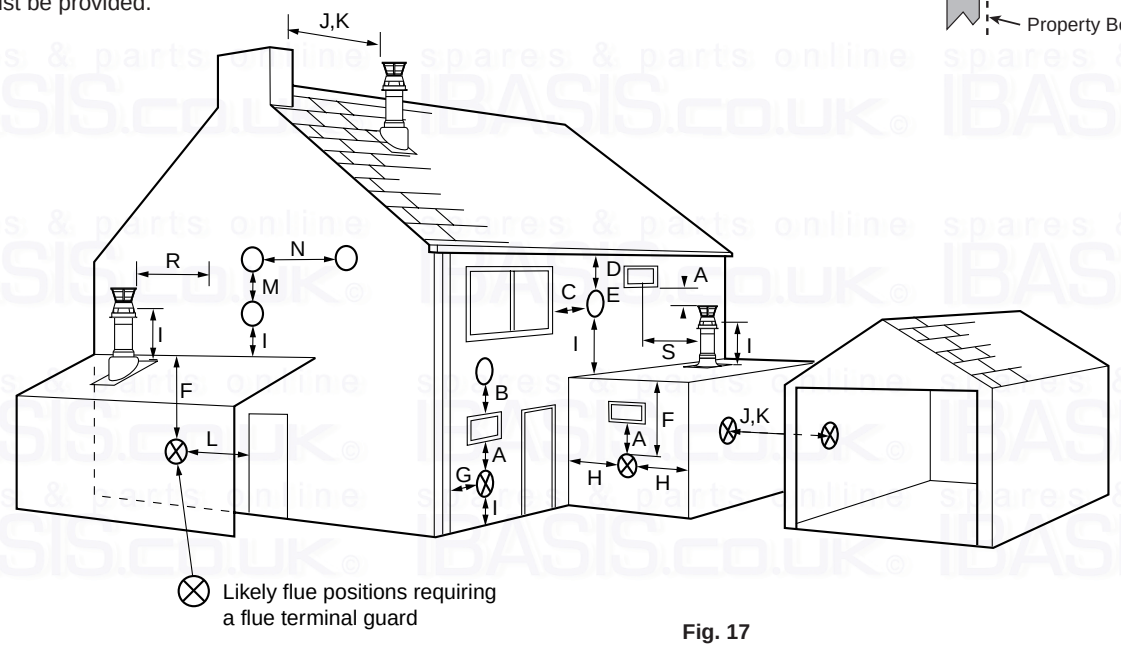

Fig. 17

7.0 SITE REQUIREMENTS

7.8 Flue Dimensions

See Section 1.2. The standard horizontal flue kit allows for flue lengths between 270mm (10⁵/₈”) and 800mm (32”) from elbow to terminal (Fig. 18).

The maximum permissible equivalent flue length is: 4 metres (Fig. 18a).

> **NOTE:** Each additional 45° of flue bend will account for an equivalent flue length of 0.5m.
> eg. 45° = 0.5m, 90° = 2 x 45° = 1m etc.

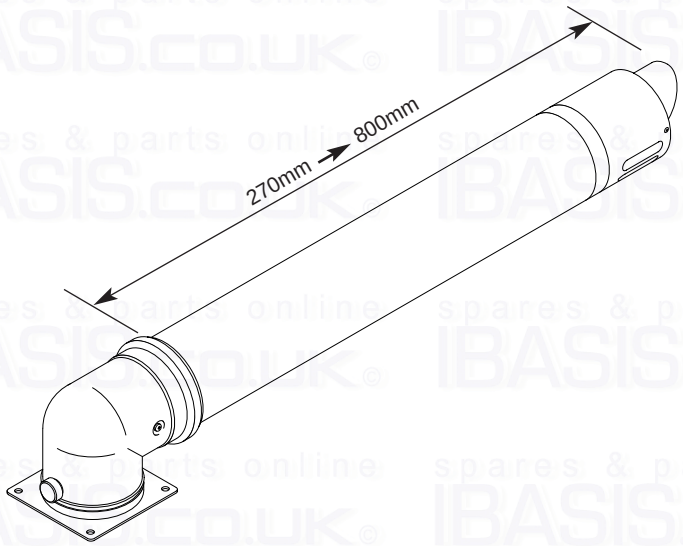

Fig. 18

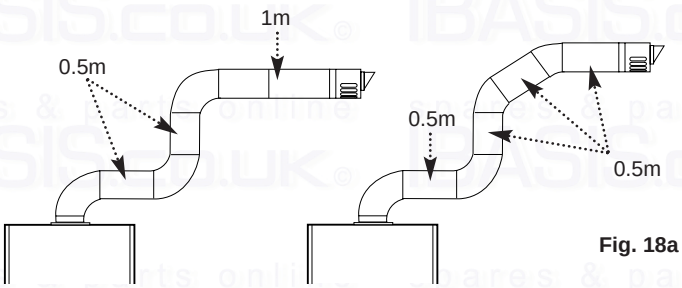

Fig. 18a

Pictorial examples of flue runs where EQUIVALENT flue length equals 4m

7.9 Terminal Guard (Fig. 19)

1. When codes of practice dictate the use of terminal guards, they can be obtained from most Plumbers’ and Builders’ Merchants.

2. There must be a clearance of at least 50mm between any part of the terminal and the guard.

3. When ordering a terminal guard, quote the appliance model number.

4. The flue terminal guard should be positioned centrally over the terminal and fixed as illustrated.

7.10 Vertical Flue

1. Only a flue approved with the Potterton Promax System HE can be used.

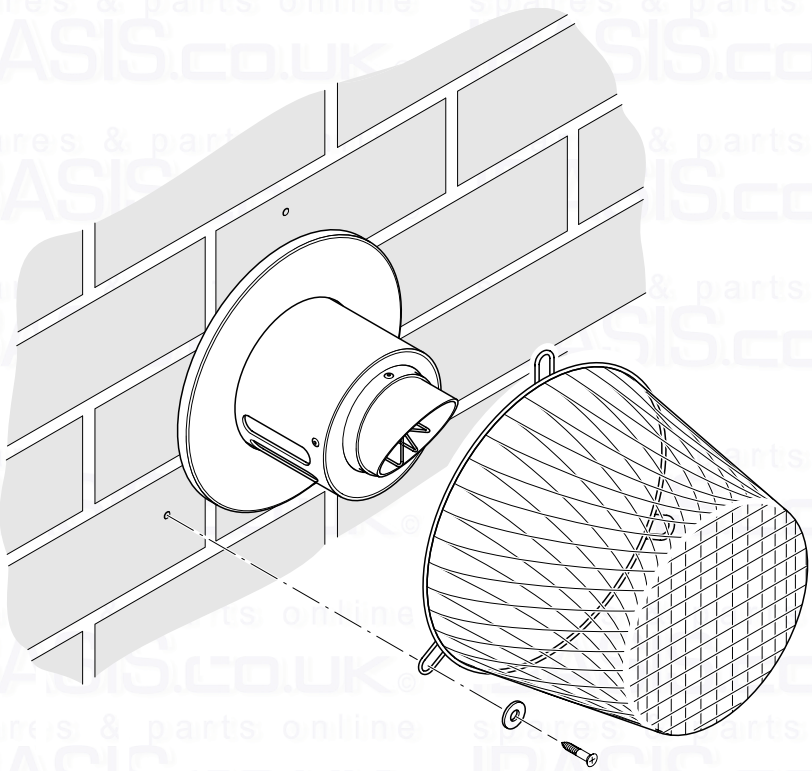

Fig. 19

7.13 Flue options

Concentric
The maximum equivalent lengths are 4m (horizontal) or (vertical). There lengths exclude the standard elbow and flue/terminal assembly (horizontal) and terminal assembly (vertical).

Twin Flue
The total maximum equivalent flue length is 150m.
NOTE: Each 1m of flue duct should be calculated as 2m.

Any additional “in line” bends in the flue system must be taken into consideration. Their equivalent lengths are:

Concentric Pipes:	45° bend	0.5 m
	93° bend	1.0 m
Twin Flue Pipe:	45° bend (air duct)	1.3 m
	45° bend (flue duct)	2.6 m
	90° bend (air duct)	4.8 m
	90° bend (flue duct)	9.6 m

Detailed examples of equivalent flue length calculation are given in the Installation Guidance Notes for each flue system type.
(Documents 243501 and 243502 for concentric and twin pipe respectively).

Key	Accessory	Size	Baxi Code Number
Concentric Flue System 110mm diameter			
A	Straight extension kit	1000mm	241695
		500mm	241694
		250mm	241692
B	Bend kit	93°	241687
C	Bend kit (pair)	45°	241689
D	Horizontal flue terminal		243013BAX
	Clamp	110mm	243014BAX
Twin Flue System 80mm diameter			
E	Straight extension kit	1000mm	238690
		500mm	238692
		250mm	238694
F	Bend kit	90°	246139
G	Bend kit (pair)	45°	246138
Universal Vertical Flue Kits			
H	Twin flue adaptor kit		242757
J	Vertical flue terminal		242802
K	Universal roof tile	25°/50°	243015
L	Roof cover plate kit		243131
M	Flat roof flashing		243016BAX
N	Boiler connection vertical concentric		242886
	Clamp	80mm	238684

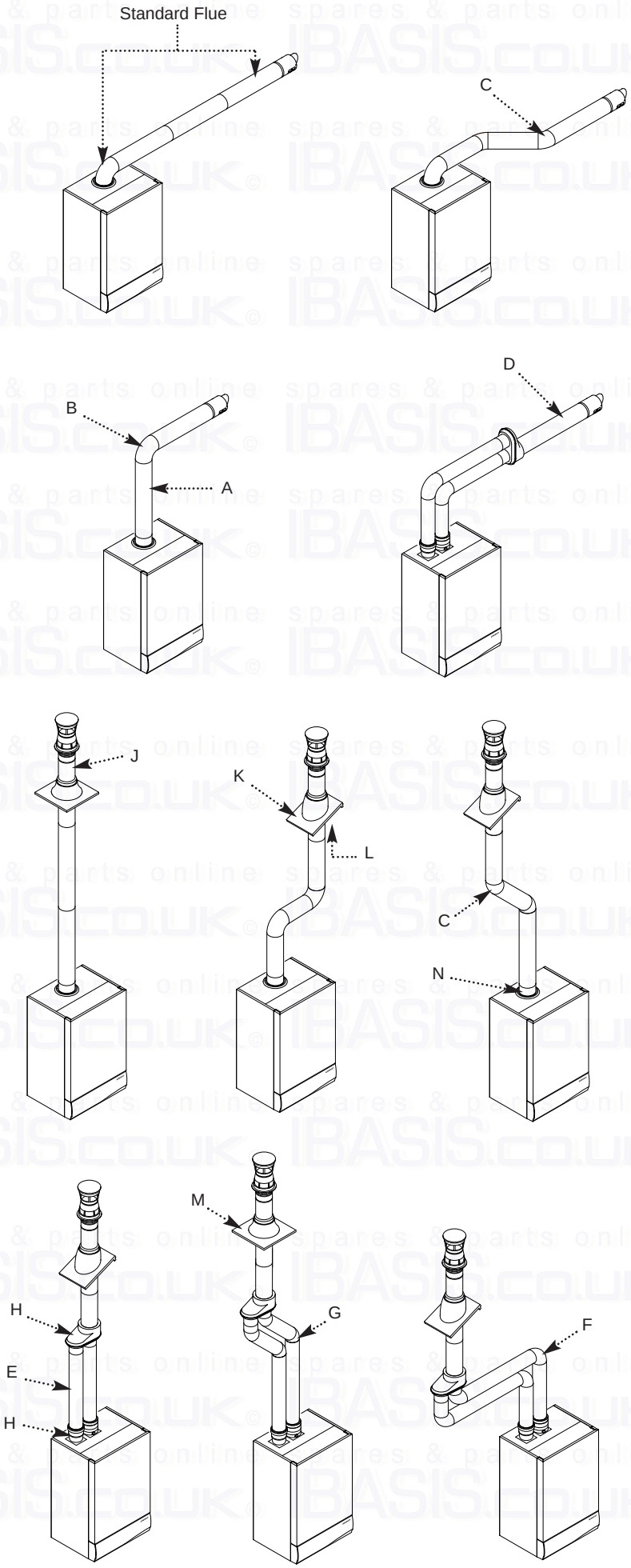

8.0 INSTALLATION

Check Site Requirements (section 7.0) before commencing.

8.1 Initial Preparation

The gas supply, gas type and pressure must be checked for suitability before connection (see Section 7.6).

> **NOTE:** If the boiler is to be pre-plumbed, follow both these instructions and those on the boiler pack.

1. Remove the fixing template (Fig. 20) from the fixing carton.

2. After considering the site requirements (see Section 7.0) position the template on the wall ensuring it is level both horizontally and vertically.

3. Mark the position of the top centre hole for the wallplate.

4. Mark the condensate discharge pipe area.

5. Mark the centre of the flue hole (rear exit). For side exit, mark as shown. If required, mark the position of the gas and water pipes. Remove the template.

6. Cut the hole for the flue (minimum diameter 125mm) (see table opposite for wall thickness flue diameter's).

7. Drill and plug the wall as previously marked. Secure the wallplate to the wall by the top centre hole.

8. Ensuring the wallplate is level both horizontally and vertically, drill and plug the remaining 4 securing positions at the top and bottom through the wallplate. Utilising the slots available ensure the wallplate is square and secure to the wall.

9. Connect the gas, water and the pressure relief discharge pipes to the valves on the support bracket using the copper tails supplied. Ensure the sealing washers are fitted correctly to the water connections.

10. Loosely route the condensate discharge pipe to the area previously marked.

8.2 Flushing

1. Insert a tube into the valve outlet furthest from the filling loop (Fig. 21).

2. Flush thoroughly (see System Details, Section 6.0).

Fixing Template

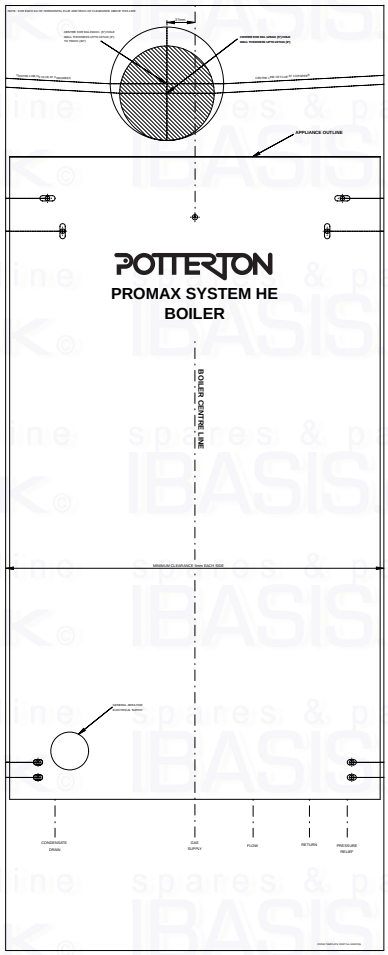

Fig. 20

Wall Thickness	Flue Hole ø
up to 227mm	125mm core drill
up to 750mm	150mm core drill
up to 1200mm	175mm core drill

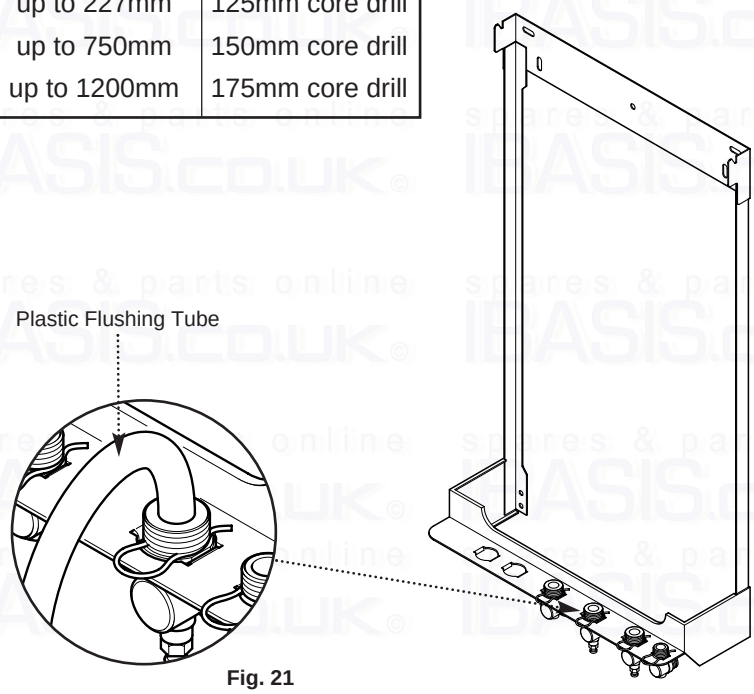

Fig. 21

8.3 Preparing The Boiler

1. Remove the outer carton.

2. Remove the internal packaging.

3. Lift the outercase upwards and remove (Fig. 23).

Potterton declare that no substances harmful to health are contained in the appliance or used during appliance manufacture.

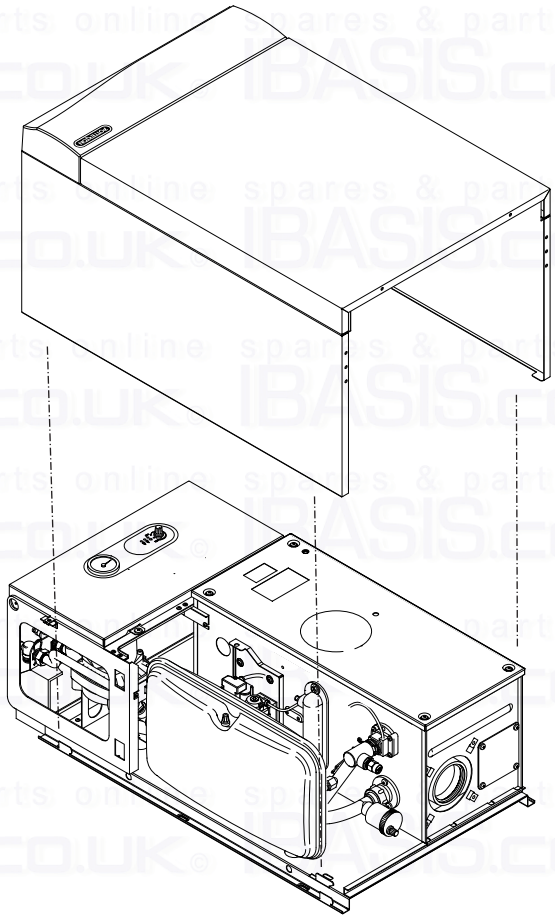

Fig. 23

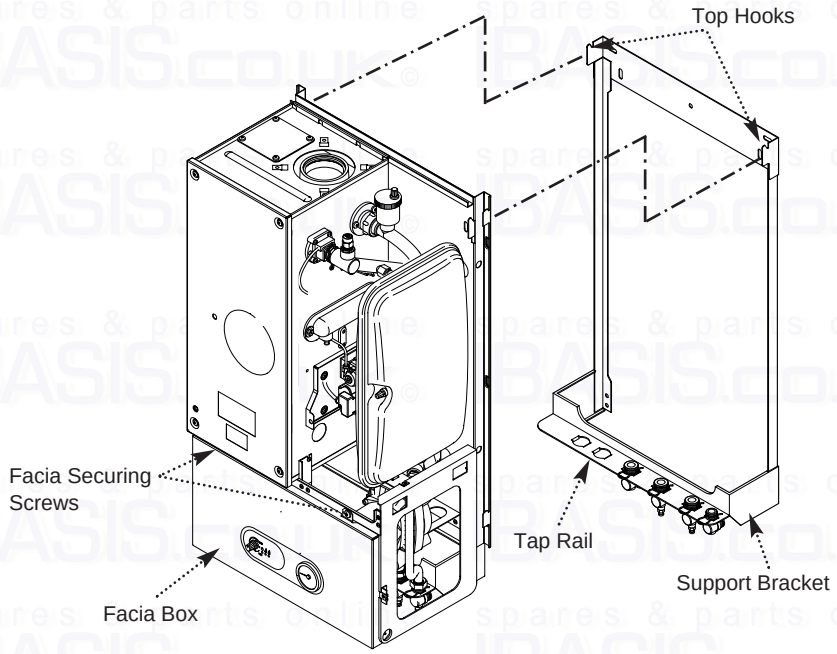

Fig. 24

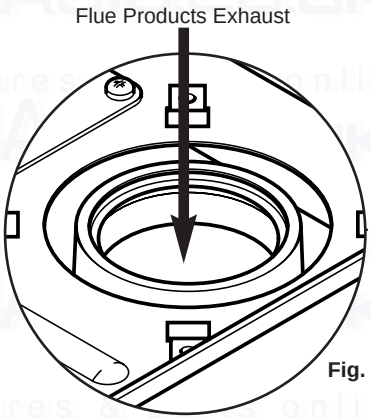

Fig. 25a

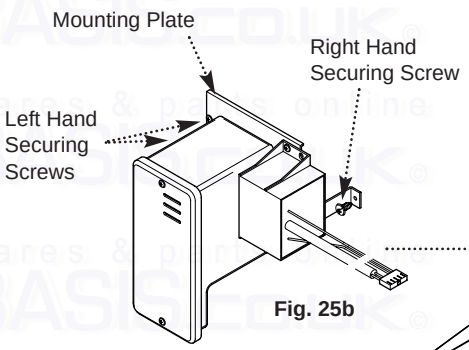

Fig. 25b

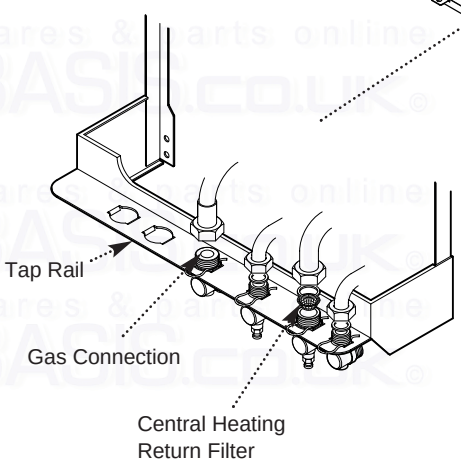

Fig. 25

8.4 Fitting The Boiler (Fig. 24)

1. Remove the tape from the tap rail on the support bracket and fit the central heating return filter (Fig. 25).

2. Lift the boiler using the lower edges of the combustion box.

3. Lift the boiler over the support bracket and engage onto the top hooks.

4. To gain access to the connections between boiler and valves, release the facia securing screws ($^1/_4$ turn) and hinge down the facia box.

5. Make the gas connection first. This will centralise the boiler. The gas sealing washer is an integral part of the gas tap.

6. Insert the fibre sealing washers between the valve outlet face and the flange on the copper bends of the water circuit connections.

7. Tighten the connections.

8.5 Making the Condensate Drain Connection

1. Connect the condensate drain using the 1” BSP nut and seal supplied. (see section 7.8.)

2. For better access, loosen the left hand electrical box/transformer mounting plate securing screws and remove the right hand securing screw. Slide the electrical box to the right (Fig. 25b).

NOTE: To ensure the correct operation and integrity of the condensate drainage system - Carefully pour approximately 1 litre of water into the flue products exhaust, at the top of the heat exchanger (Fig. 25a).

Check the condensate drain for leaks, blockage and fall.

8.6 Fitting The Flue

Before fitting the flue, check the condensate drain integrity (see section 8.5).

IMPORTANT: The flue should always be installed with a 3° (1 in 20) fall from terminal to elbow, to allow condensate to run back to the boiler.

HORIZONTAL FLUE

1. The standard flue is suitable for lengths 270mm minimum to 800mm maximum (measured from the edge of the flue elbow outlet).

Rear Flue: maximum wall thickness - 630mm
Side Flue: maximum wall thickness - 565mm (left or right)

2. **For rear exit** - measure the wall thickness (Fig. 26) and to this dimension add 220mm. This dimension to be known as (X).
i.e.
(X) = wall thickness + 220mm

3. Take the flue and mark off (X) from the terminal end as indicated in the diagram (Fig. 27).

Check your dimensions.

The flue tubes are fixed together. Cut through both tubes whilst resting the flue on the semi-circular packing pieces. Deburr both tube ends.

4. **For left hand exit** - measure the distance from the edge of the wall plate to the inner face of the wall (Fig. 26) and to this dimension add the wall thickness + 250mm. This dimension to be known as (Y).
i.e.
(Y) = wall plate to wall + wall thickness + 250mm

5. Take the flue and mark off (Y) from the terminal end as indicated (Fig. 27).

6. **For right hand exit -** measure the distance from the edge of the wall plate to the inner face of the wall and to this dimension add the wall thickness + 325mm. This dimension to be known as (Z).
i.e.
(Z) = wall plate to wall + wall thickness + 325mm

7. Take the flue and mark off (Z) from the terminal end as indicated (Fig. 27).

Check your dimensions.

The flue tubes are fixed together. Cut through both tubes whilst resting the flue on the semi-circular packing pieces. Deburr both tube ends.

IMPORTANT: Check all measurements before cutting. When cutting ensure the cut does not interfere with the inner flue support bracket (Fig. 27a).

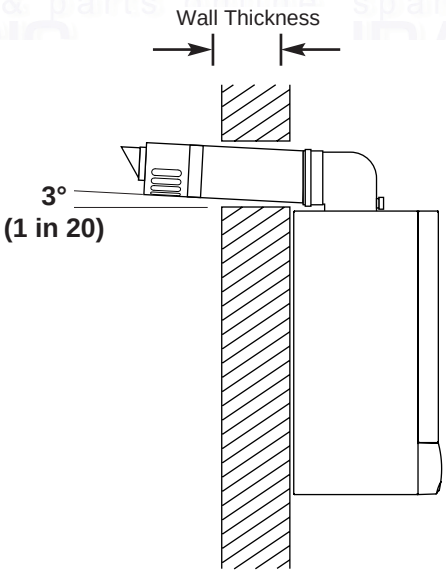

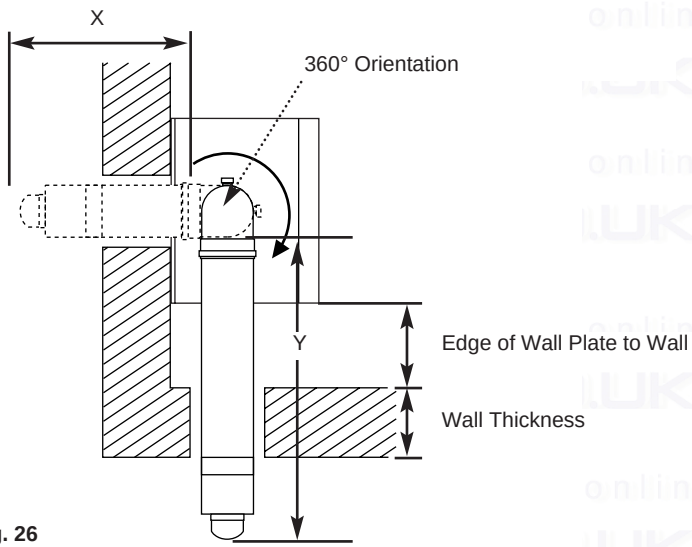

Fig. 26

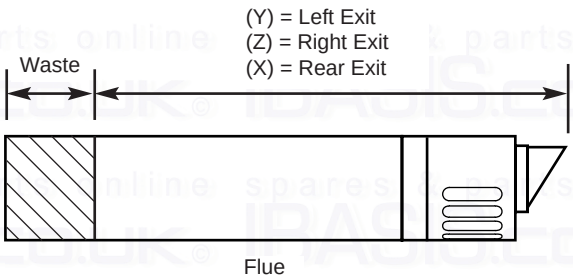

Fig. 27

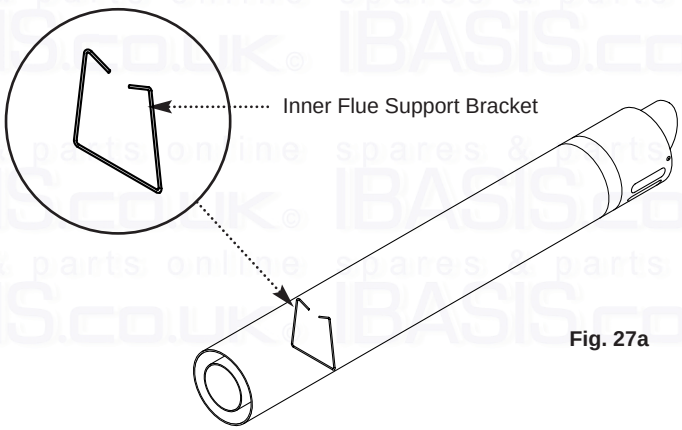

Fig. 27a

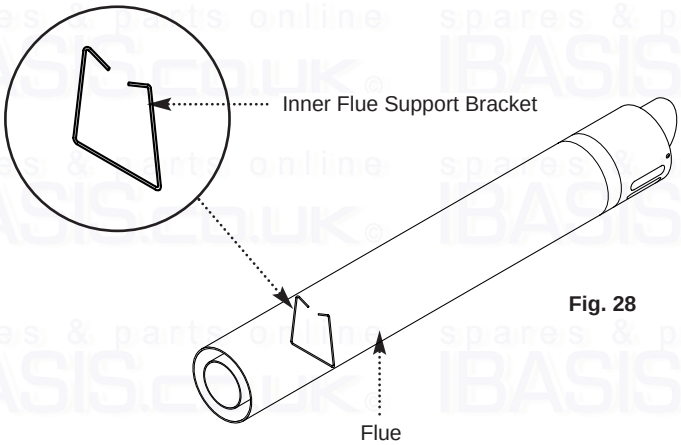

Fig. 28

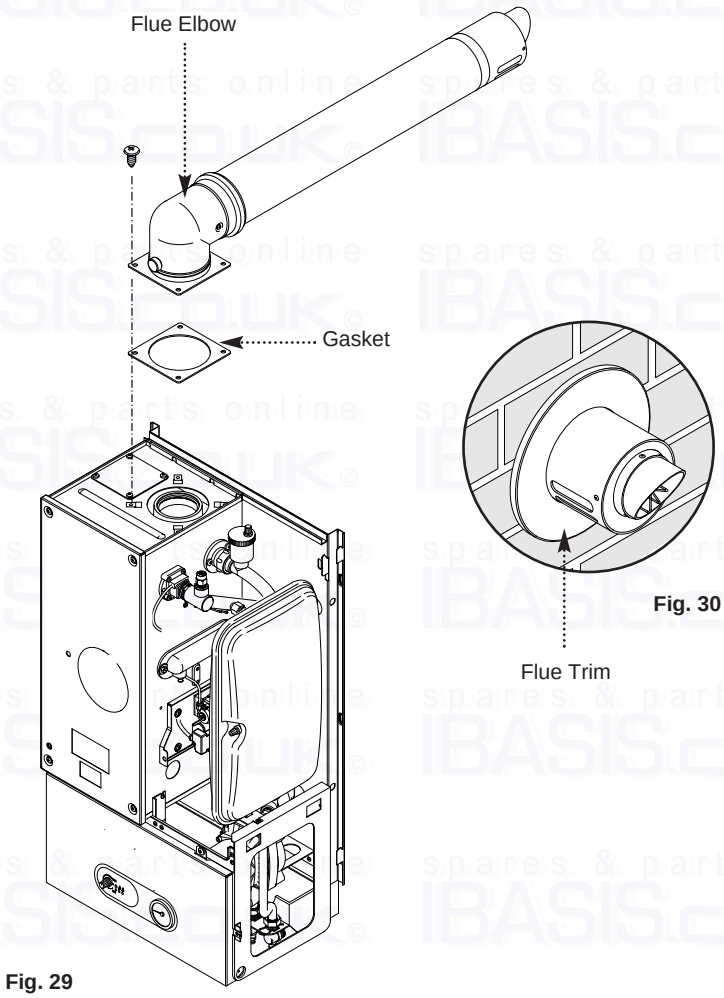

Fig. 29

Fig. 30

8.6 Fitting the Flue (Cont)

6. Ensure the inner flue support bracket is positioned in the flue (Fig. 28).

7. Engage the flue into the flue elbow using soap solution to ease the engagement ensuring the flue is assembled as shown (Fig. 29).

8. Place the gasket over the flue exit on the boiler.

9. Slide the flue assembly through the hole in the wall.

10. Engage the elbow on to the flue connection on top of the boiler. Secure with the four screws supplied in the kit.

11. Make good between the wall and air duct outside the building ensuring the 3° drop between the terminal and elbow.

12. The flue trim should be fitted once the installation is complete and the flue secure. Apply a suitable mastic to the inside of the trim and press against the wall finish, making sure the brickwork is dust free and dry (Fig. 30). If necessary fit a terminal guard (see section 7.11).

VERTICAL FLUEING

1. Only a flue approved with the Potterton Promax System HE Boiler can be used.

8.7 Making The Electrical Connections

WARNING: This appliance must be earthed

1. The electrical connections are on the left hand side of the unit behind the facia inside the electrical box.

2. Undo the two screws securing the electrical box cover and remove the cover (Fig. 31).

3. Undo the two screws securing the SL, ⏚, N, PF cable clamp and place to one side (Fig. 32).

4. The boiler is factory set to give a maximum output of 22.0 kW (75,000 Btu/hr). The Control PCB jumper positions are as follows:

J1 In J2 In J3 In

If the installation requires a greater output to achieve the desired room temperature, this can be increased to 31.18 kW (103,000 Btu/hr) and the boiler can be adjusted as follows:

a) Draw the control PCB forwards out of the electrical box (the control PCB is the right hand board).
b) Remove all three jumpers.
c) Replace the PCB and continue with the installation.

If the boiler is to be used in conjunction with a Thermal Store, the boiler can be adjusted as follows (Fig. 32a):

a) Draw the control PCB forwards out of the electrical box (the control PCB is the right hand board).
b) Remove jumper nº 2.
c) Replace the PCB and continue with the installation.

5. Lay the cable through the cable clamp to gauge the length of cable required when it is connected to the 4-way terminal block (Fig. 32).

6. Connect the (S/L), (N) and (⏚) wires to the 4-way terminal block and refit the cable clamp (Fig. 33).

7. The P/F connection should be used as a external pump live feed when fitting an extra pump to the system boiler on a fully TRV'd system with no bypass. If the S/L connection is used, this will not protect the external pump if all TRV's shut down in a full TRV system.

8. Check the electrical installation for;
earth continuity, short circuits, resistance to earth, correct polarity and fuse failure.

9. Replace the electrical box cover and secure.

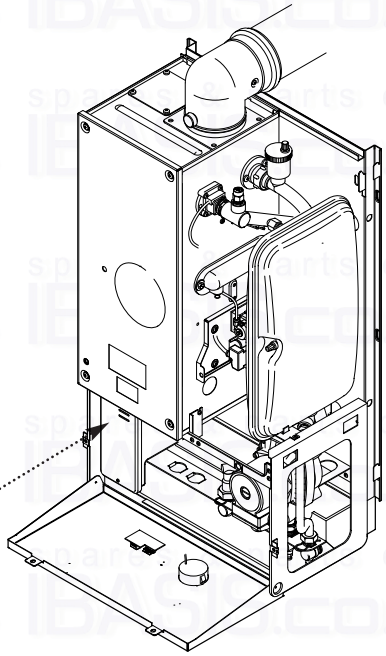

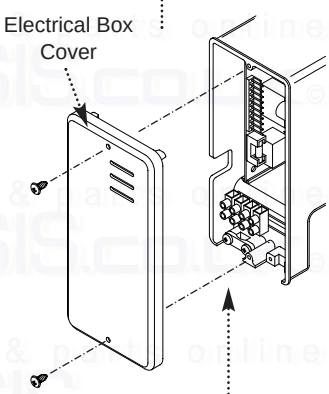

Fig. 31

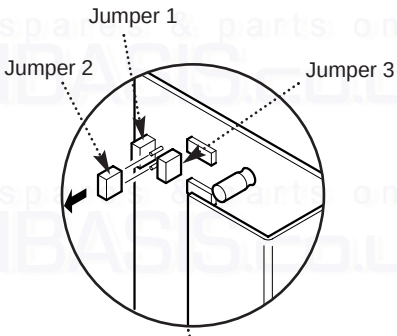

Fig. 32a

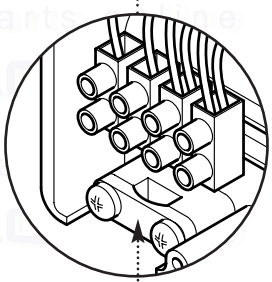

Fig. 32

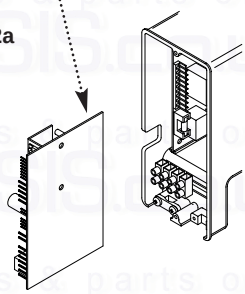

Control Board

Cable Clamp

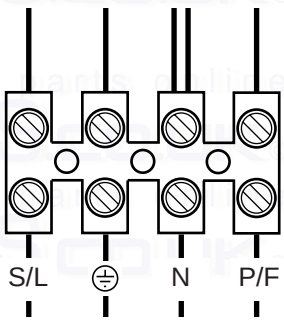

Fig. 33

S/L = Switched live to the Boiler from the System Controls.

P/F = Optional Pump Feed, only need be used when fitting an additional external pump on a full TRV system without a bypass fitted.

9.1 Schematic Wiring Diagram

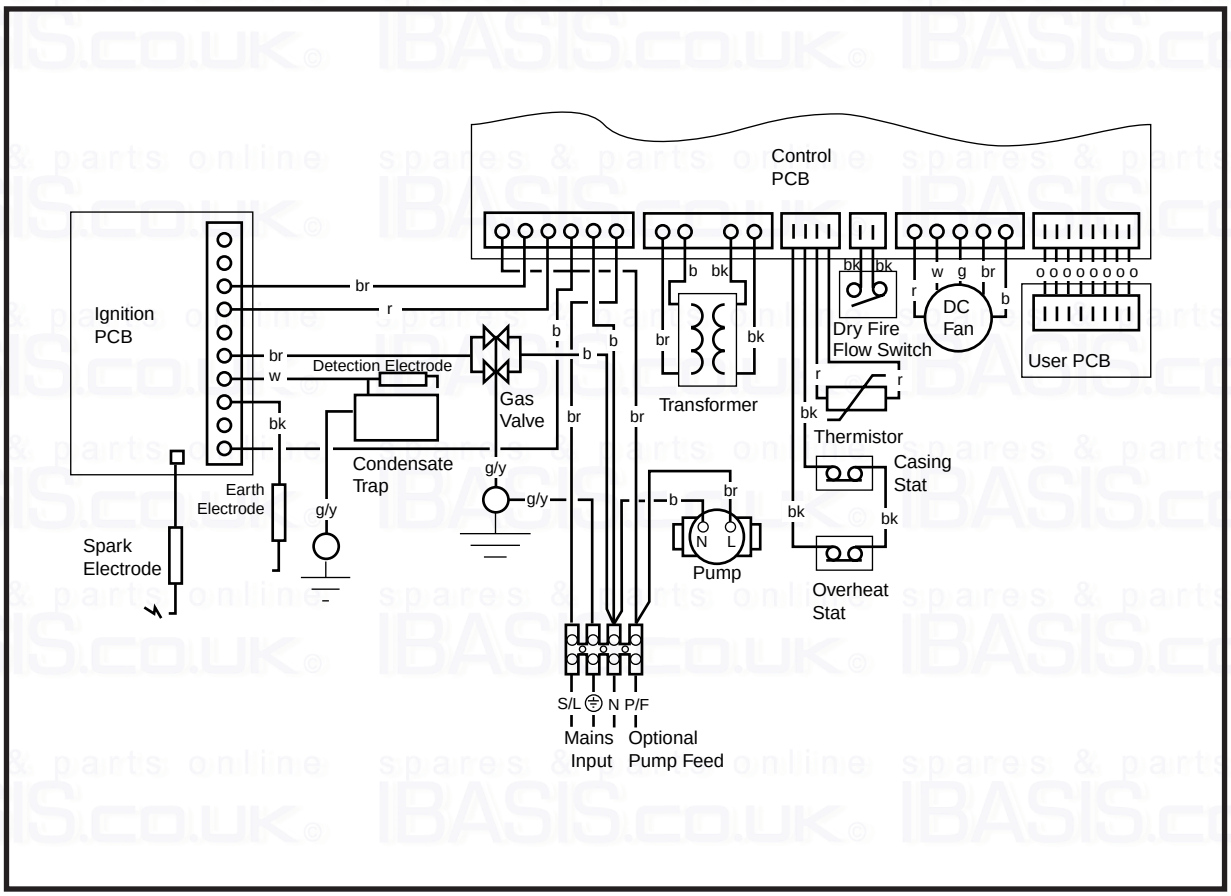

Key To Wiring Colours

b - Blue	r - Red
bk - Black	g - Green
w - White	g/y- Green/Yellow
br - Brown	y - Yellow
v - Violet	o - Orange

9.2 Illustrated Wiring Diagram

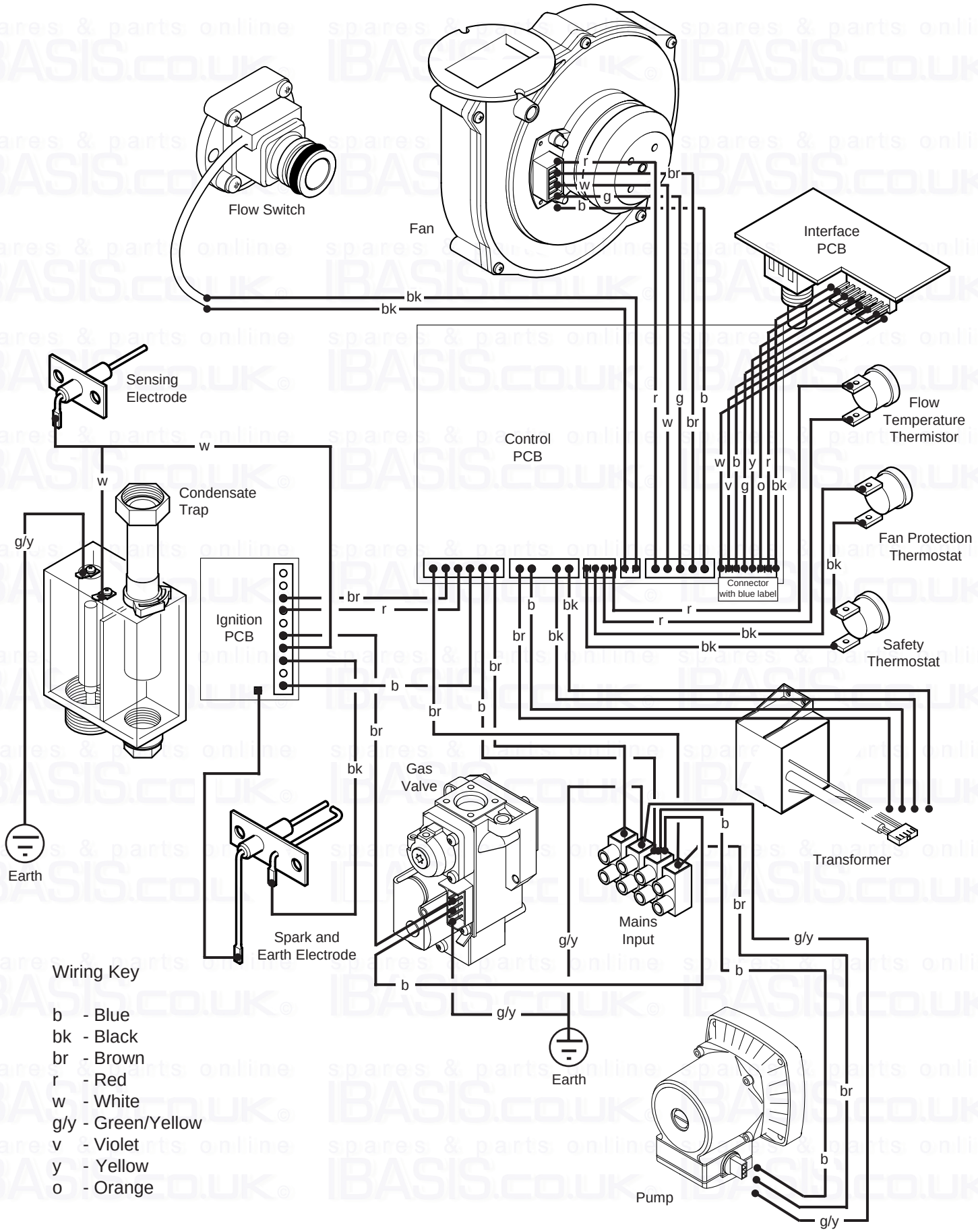

10.0 COMMISSIONING

10.1 Commissioning the Boiler

1. Reference should be made to BS 5449 Section 5 when commissioning the boiler.

2. Flush the whole system using a suitable flushing agent (see Section 6.2) and vent the radiators. Check for water leaks.

3. Refill the system with inhibitor following the inhibitor manufacturer's instructions and BS 7593 Code of Practice for Treatment of Water in Domestic Hot Water Central Heating Systems (see Section 6.2).

4. Turn the gas supply on and purge according ti in GB BS 6891 and in IE I.S. 813 "Domestic Gas Installations".

5. Turn the gas service cock anticlockwise to the on position and check for gas soundness up to the gas valve.

6. Turn the boiler control knob fully clockwise to 'high' (Fig. 34) and run the system and check the boiler for correct operation.

> **NOTE:** The boiler is self-regulating and the gas rate will modulate between inputs of 33.76kW and 10.2kW dependent upon the system load. The input is factory set at 24.5kW and can be altered to 33.76kW - see section 8.7. **No adjustment of the gas valve is permissible.**

7. With the system cold and all controls calling for heat check the gas pressure at the inlet tapping of the gas valve (Fig. 35). The pressure must be a minimum of 18.1 mbar.

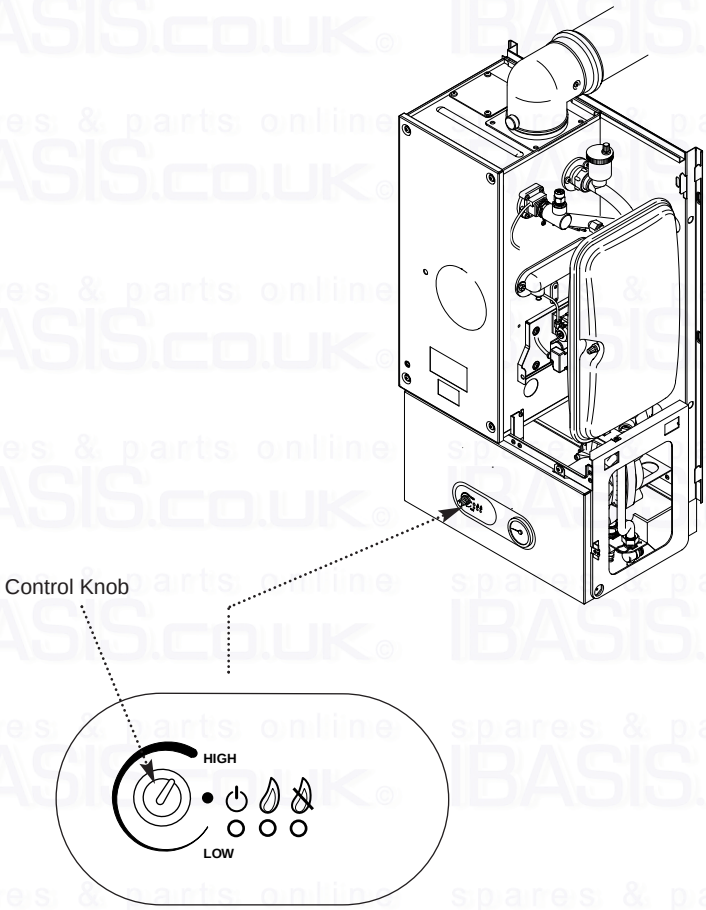

Fig. 34

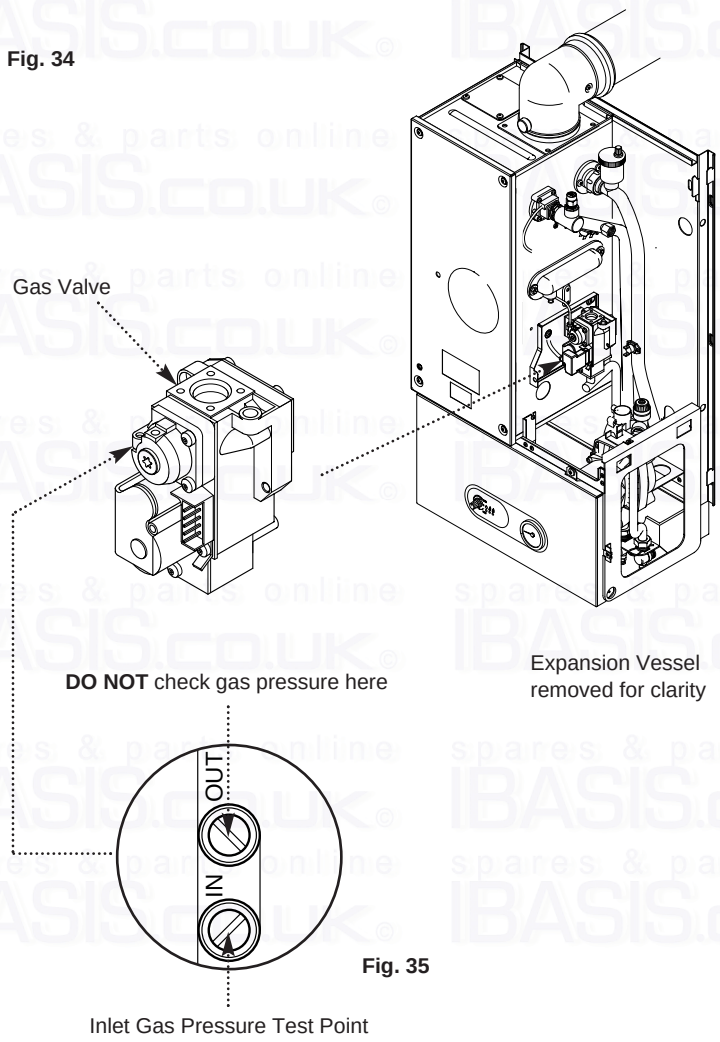

Fig. 35

11.0 OUTER CASE

11.1 Fitting The Outer Case

1. Position the outercase on the chassis, ensuring that the four slots in the side flanges align with the hooks on the chassis (Fig. 36).

2. Insert the two fixing screws into the sides of the chassis (Fig. 37).

3. Close the door against the retaining magnets (Fig. 37).

4. Carefully read and complete all sections of the “Benchmark” Installation, Commissioning and Service Record Log Book that are relevant to the appliance and installation. The details of the Log Book will be required in the event of any warranty work. The Log Book must be handed to the user for safe keeping and each subsequent regular service visit recorded.

For IE, it is necessary to complete a “Declaration of Conformity” to indicate compliance to I.S. 813. An example of this is given in I.S. 813 “Domestic Gas Installations”. This is in addition to the “Benchmark” Log Book.

5. The “Important Ventilation Information” label can be removed unless the appliance is installed in an unventilated compartment.

6. Instruct the user in the operation of the boiler controls. Hand over the Users Operating, Installation and Servicing Instructions and the Log Book, giving advice on the necessity of regular servicing.

7. Advise the user that they may observe a plume of vapour from the flue terminal, and that it is part of the normal operation of the boiler.

8. Complete the label supplied with the inhibitor and stick to the inside of the boiler case. Detail of system treatment must be recorded in the Benchmark Log Book.

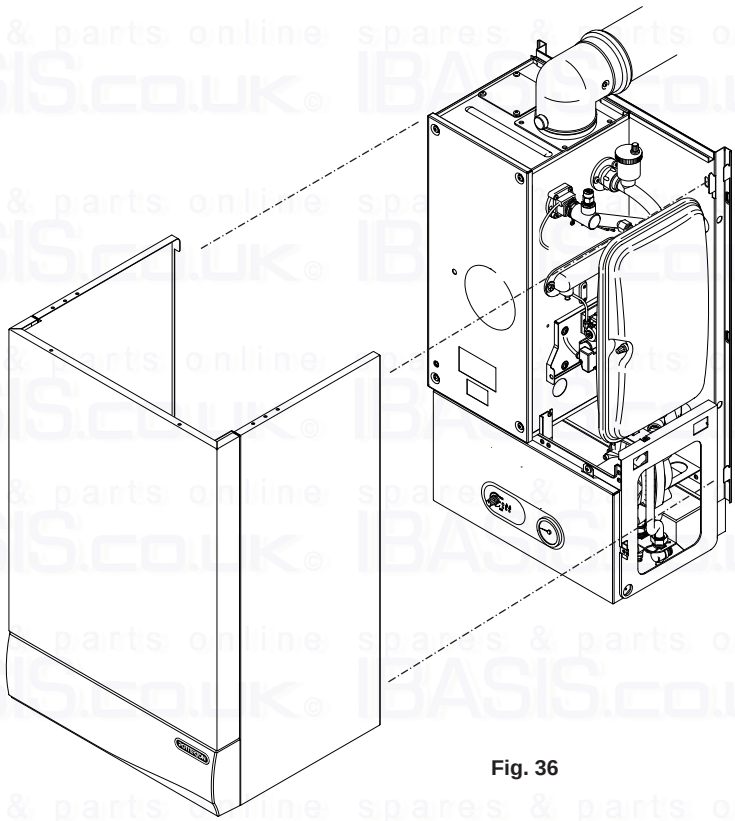

Fig. 36

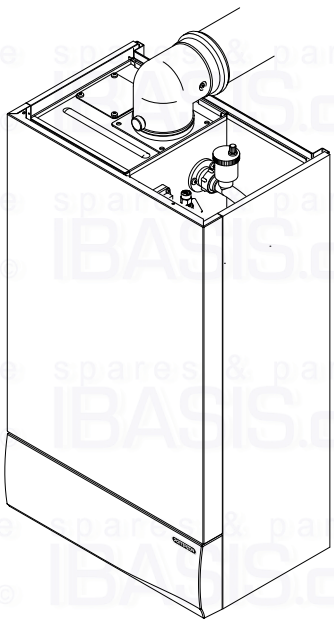

Fig. 37

12.0 SERVICING

12.1 Annual Servicing

IMPORTANT: When servicing ensure that both the gas and electrical supplies to the boiler are isolated before any work is started.

When the boiler control knob is switched off the control PCB remains live. Therefore it is important to isolate the electrical supply.

Hazardous materials are not used in the construction of Potterton products, however reasonable care during service is recommended.

When replacing the combustion box door after servicing it is essential that the retaining screws are tightened fully.

1. For reasons of safety and economy, it is recommended that the boiler is serviced annually.

2. After servicing, complete the relevant section of the “Benchmark” Installation, Commissioning and Service Record Log Book. This should be in the possession of the user.

3. Ensure that the boiler is cool.

4. **Ensure that both the gas and electrical supplies to the boiler are isolated.**

5. Remove the outercase and lower door panel (see Fitting the Outercase, Section 11.0).

6. Release the four ¼ turn screws securing the air box door panel and remove the door (Fig. 39).

7. Disconnect the three lead terminals from the combustion box door taking note of their positions (Fig. 39).

8. Undo the four screws securing the combustion box door and remove the door (Fig. 40).

9. Visually check for debris/damage and clean or replace if necessary the following:

a) Burner **(Fragile - handle with care).**
b) Heat exchanger fins.
c) Fan compartment (Check also for condensate leaks).
d) Insulation.
e) Door seals.
f) Electrodes.
g) Check condensate trap for debris. **NOTE:** Remove the trap drain plug and place a vessel underneath to catch the condensate (care should be taken as this could be hot). Clean the trap and refit the drain plug.
h) Top of heat exchanger.

NOTE: General cleaning can be undertaken using a vacuum. However debris should only be gently blown off the burner skin due to its fragile nature.

10. Check system pressure is between 1 and 2.5 bar.

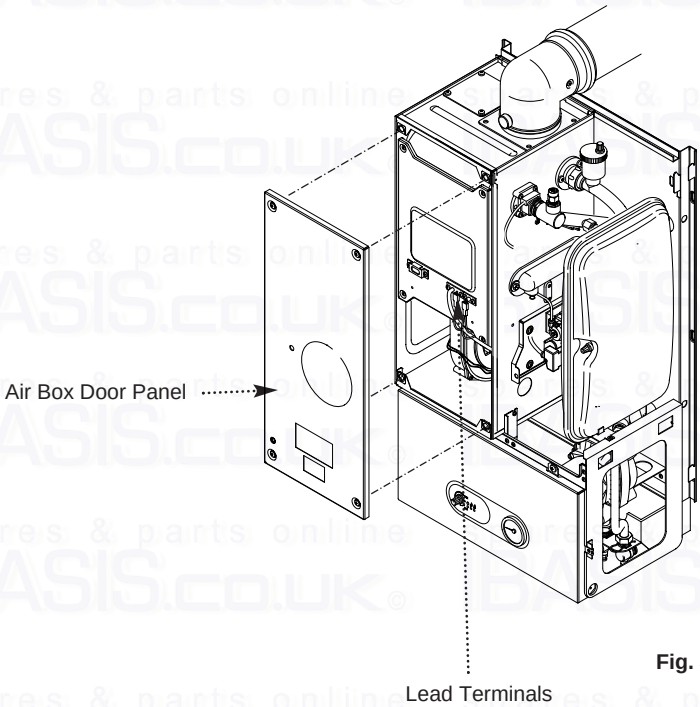

Fig. 39

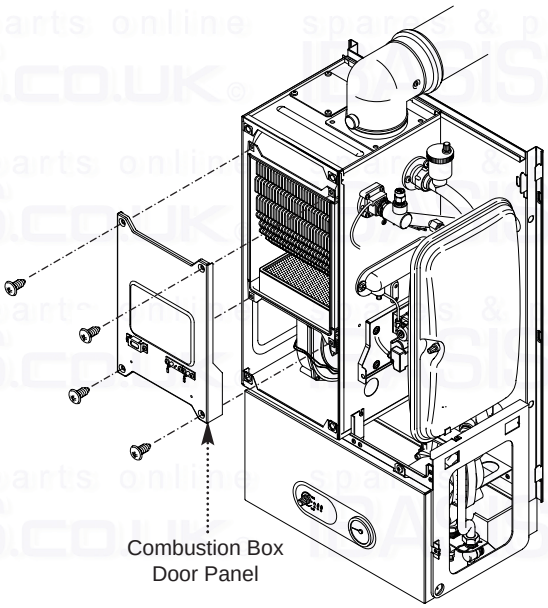

Fig. 40

12.1 Annual Servicing (Cont)

11. To clean the heat exchanger and burner proceed as follows:

a) Disconnect the electrical leads to the fan component protection sensor (Fig. 41).

b) Loosen the screw retaining the gas injector pipe at the venturi (Fig. 41).

c) Undo the two wing nuts to disconnect the fan (Fig. 41).

d) Remove the fan and disconnect the electrical supply to it (Fig. 41).

e) Remove the gas injector pipe from the gas valve (push-fit) (Fig. 41).

f) Undo the condensate trap securing nut, lock nut and the condensate drain pipe. Remove the condensate trap and disconnect the sensor leads (Fig. 42).

g) Remove the two screws securing the burner and remove the burner. Visually inspect the internal burner baffle for obstruction.

> **NOTE:** The burner skin is fragile - handle with care. Clean and if necessary replace the burner (Fig. 43) (see note, page 26).

h) Loosen the two screws retaining the heat exchanger support bracket and slide to the left to remove (Fig. 43).

i) Remove the four screws securing the heat exchanger/combustion box base and withdraw the base.

j) Lower the central insulation panel and check condition (Fig. 43). Replace the lower insulation pad if necessary.

k) Ensure the heat exchanger fins are clear of any obstruction.

l) Check condition of all seals.

m) Reassemble in reverse order.

12. Complete the relevant section of the "Benchmark" Installation, Commissioning and Service Record Log Book and hand it back to the user.

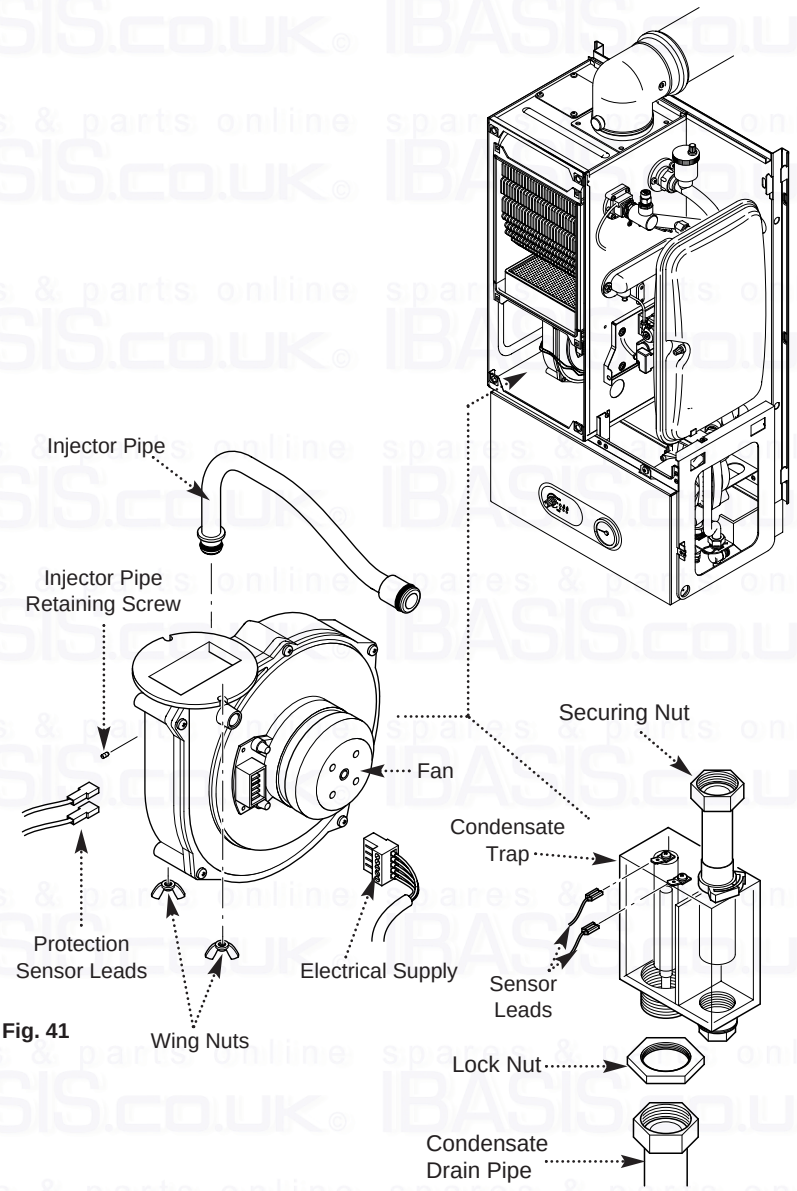

Fig. 41

Fig. 42

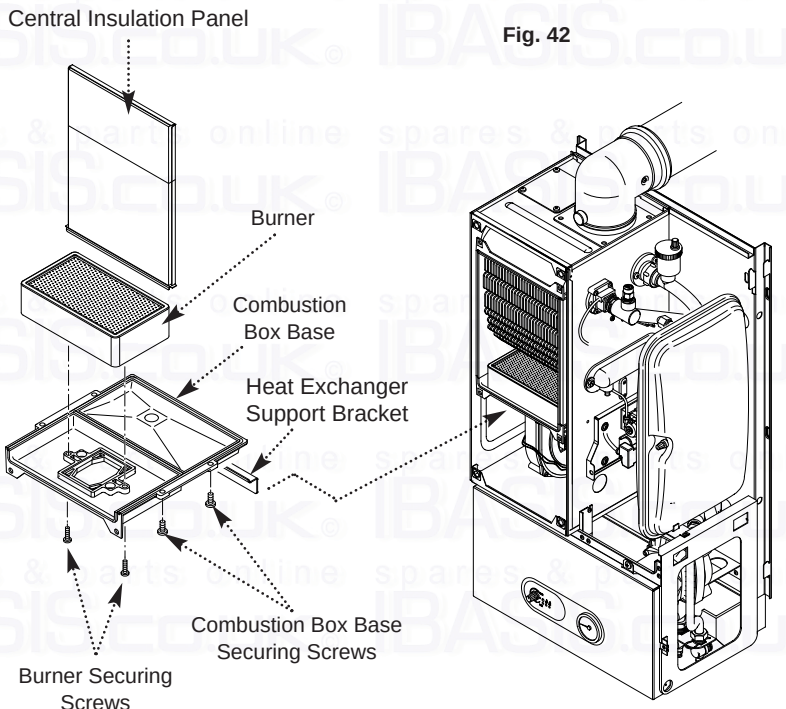

Fig. 43

13.0 CHANGING COMPONENTS

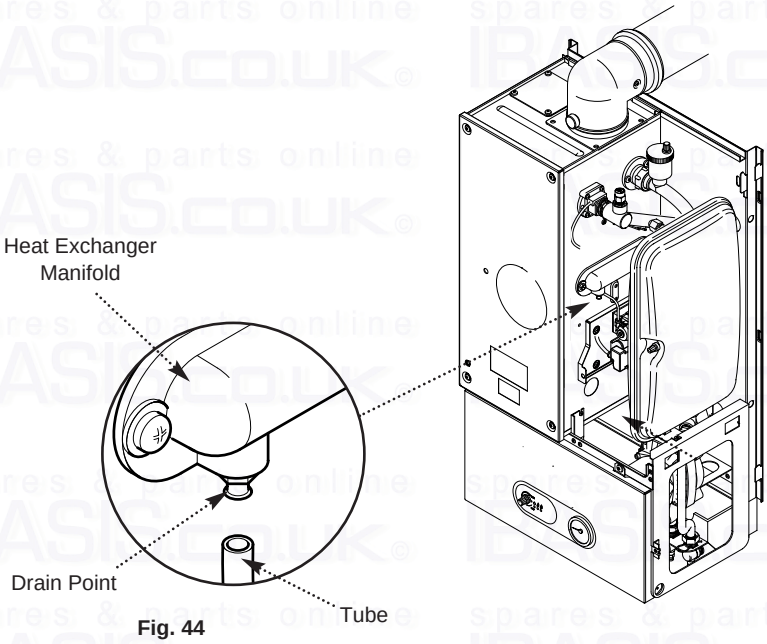

Fig. 44

13.1 Changing Components

IMPORTANT: When changing components ensure that both the gas and electrical supplies to the boiler are isolated before any work is started.

When the boiler control knob is switched off the control PCB remains live. Therefore it is important to isolate the electrical supply.

Hazardous materials are not used in the construction of Potterton products, however reasonable care during service is recommended.

When replacing the combustion box door after changing components it is essential that the retaining screws are tightened fully.

1. Remove the outer case and lower door panel (see “Fitting the Outercase” Section 11.0).

2. Isolate the water circuit and drain the system as necessary. There are 3 drain points:

a) Flow Valve
b) Heat Exchanger Manifold
c) Return Valve

NOTE: Do not use the Pressure Relief Valve to drain the circuit.

NOTE: When reassembling always fit new ‘O’ rings, ensuring their correct location on the spigot. Green “O” rings are used for gas joints and Black “O” rings for water joints. Use Greasil 4000 (Approved Silicone Grease).

3. After changing a component re-commission the boiler where appropriate and check the inhibitor concentration (see Section 6.2 and 10.1).

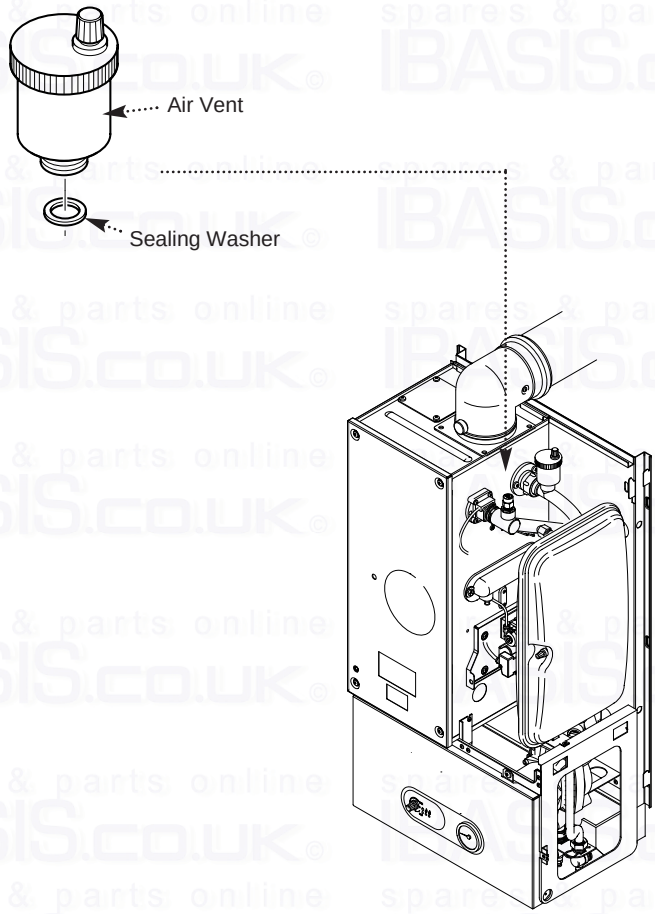

Fig. 45

The air vent, flowswitch, thermistor, safety thermostat and expansion vessel can be accessed after removal of the outer case.

13.2 Automatic Air Vent (Fig. 45)

1. Drain the boiler.

2. Undo the air vent from the return pipe and retain the sealing washer.

3. Remove the air vent.

4. Fit the new air vent and reassemble in reverse order.

13.3 Flowswitch (Fig. 46)

1. Drain the boiler (see Section 13.1 paragraph 2 & 3).

2. It may be necessary to remove the expansion vessel (see Section 13.5).

3. Remove the clip securing the flow pipe to the flowswitch.

4. Remove the two screws securing the flow switch to the boiler.

5. Disconnect the inline electrical connection.

6. Remove the flowswitch.

7. Fit the new flowswitch and reassemble in reverse order.

8. Recommission the boiler and check the inhibitor concentration (see Section 6.2 and 10.1).

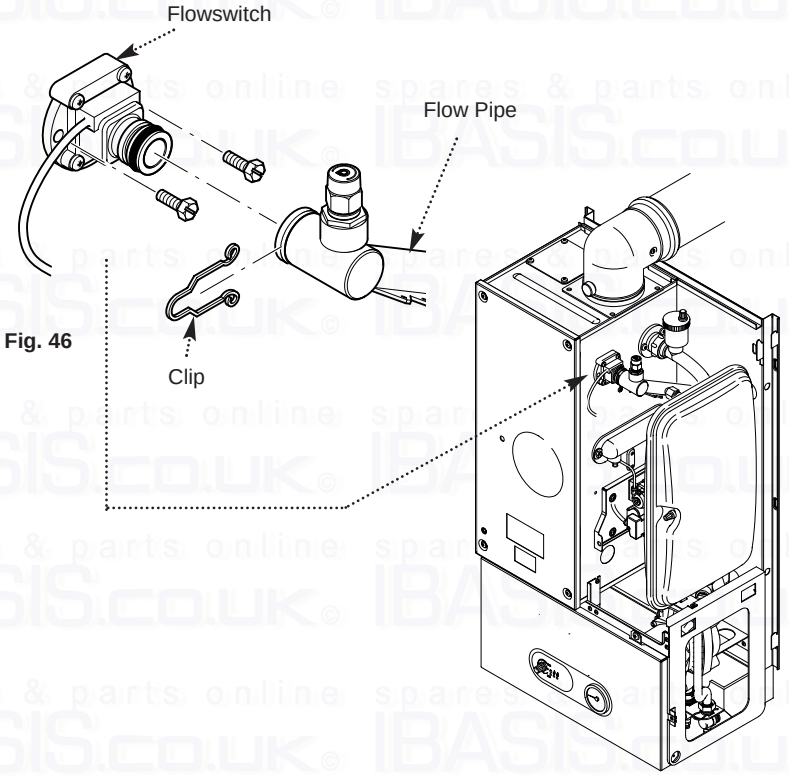

Fig. 46

13.4 Flow Temperature Thermistor and Safety Thermostat (Fig. 47)

1. The procedure is the same for both the thermistor and the safety thermostat.

2. Remove the electrical connections from the sensor.

3. Unscrew the sensor from the pipe.

4. Fit the new thermistor or safety thermostat and reassemble in reverse order.

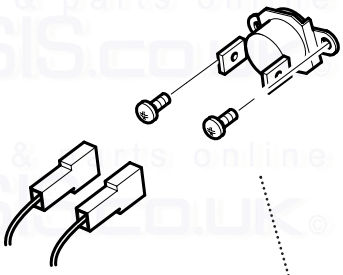

Fig. 47

13.5 Expansion Vessel (Fig. 48)

1. Drain the boiler (see Section 13.1 paragraph 2 & 3).

2. Loosen the securing screw at the base of the expansion vessel.

3. Whilst supporting the vessel undo the expansion vessel connection and retain the sealing washer.

4. Remove the expansion vessel.

5. Fit the new expansion vessel and reassemble in reverse order.

13.6 Re-pressuring Expansion vessel

1. The charge pressure is 1.0 bar.

2. Close the central heating flow and return isolating valves.

3. Drain the boiler (see Section 13.1 paragraph 2 & 3).

4. The “Schraeder” valve is positioned centrally at the side of the appliance. Pressurise to 1.0 bar.

5. Open the isolating valves and recharge the system to between 1.0 bar and 2.5 bar. Vent the system as necessary.

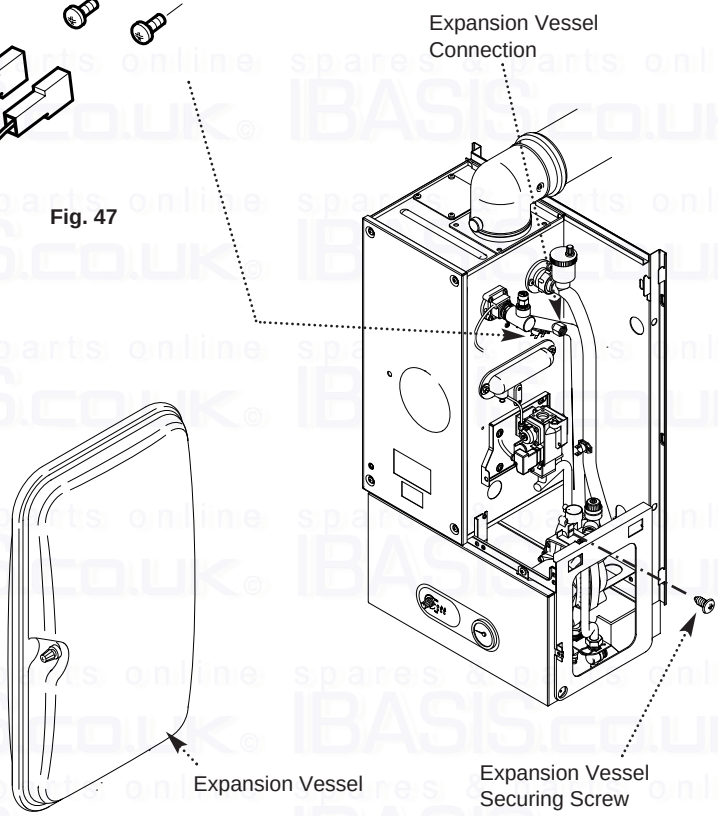

Fig. 48

13.0 CHANGING COMPONENTS

The Pump, interface PCB, pressure gauge and pressure relief valve can be accessed after hinging down the facia box.

1. Release the facia securing screws (1/4 turn) and hinge down the facia box.

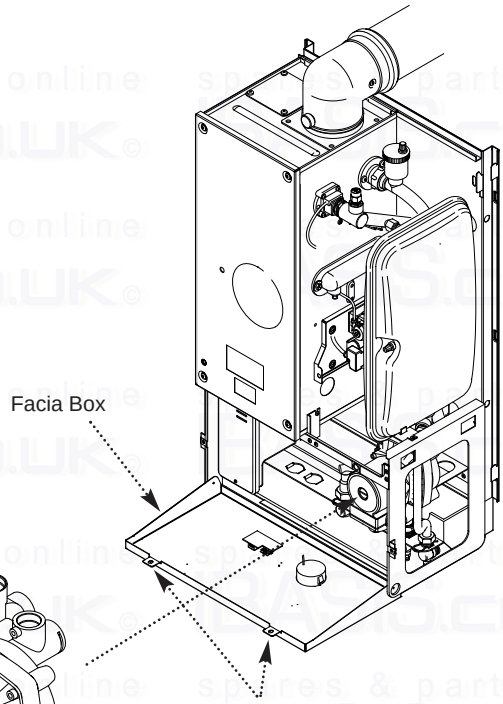

13.7 Pump (Fig. 49)

1. If only the head needs replacing. A standard Grundfos UPS 15-60 pump head is interchangeable (see section 13.13 for details).

2. This must be switched to setting N° 3 (Fig. 50).

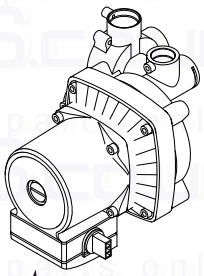

Fig. 49

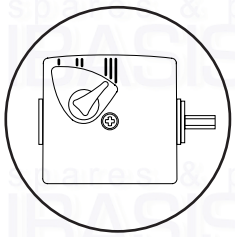

Fig. 50

13.8 Pump (Complete) (Fig. 51)

1. Drain the boiler (see Section 13.1 paragraph 2 & 3).

2. Unplug the wiring harness from the pump.

3. Remove the four screws retaining the pump backplate to the hydraulic manifold.

4. Remove the pump.

5. Fit the new pump and reassemble in reverse order.

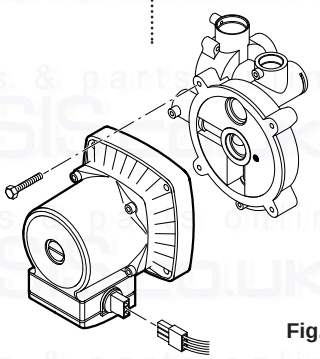

Fig. 51

13.9 Pump (Head Only) (Fig. 52)

1. Drain the boiler (see Section 13.1 paragraph 2 & 3).

2. Unplug the wiring harness from the pump.

3. Remove the four socket head screws securing the pump head and separate it from the housing.

4. Remove the screws retaining the pump electrical covers on the original and replacement heads.

5. From the replacement UPS 15-60 pump head remove the strain relief cable gland and discard.

6. Remove the plug connector from the old pump head and wire it into the UPS 15-60 pump head.

7. Replace the electrical cover to the new pump head and assemble with the electrical box at 6 o'clock to the housing.

8. Check that the pump has been switched to setting N° 3 (Fig. 50) and reconnect the wiring harness plug.

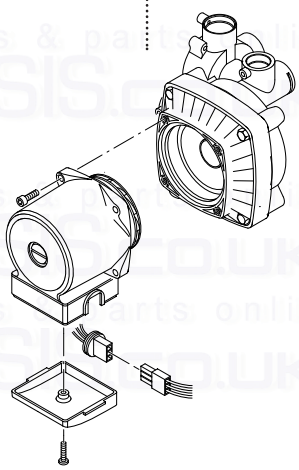

Fig. 52

13.10 Interface PCB

1. Pull the control knob off the spindle and remove the securing nut and washer (Fig. 53).

2. Lift the PCB from the facia box and remove the electrical connections (Fig. 54).

3. Fit the new PCB and reassemble in reverse order.

13.11 Pressure Gauge

1. Drain the boiler (see Section 13.1 paragraph 2 & 3).

2. Undo the nut retaining the capillary in the connection at the return pipe (Fig. 56).

3. Depress the two lugs on either side of the pressure gauge and feed through facia (Fig. 57).

4. Fit new pressure gauge and reassemble in reverse order.

13.12 Pressure Relief Valve (Fig. 58)

1. The pressure relief valve is positioned on the hydraulic manifold at the back of the pump.

2. Drain the boiler (see Section 13.1 paragraph 2 & 3).

3. Disconnect the union between the valve and the discharge pipe.

4. Slacken the screw retaining the valve.

5. Pull the valve upwards to disengage it.

6. Fit the new pressure relief valve and reassemble in reverse order.

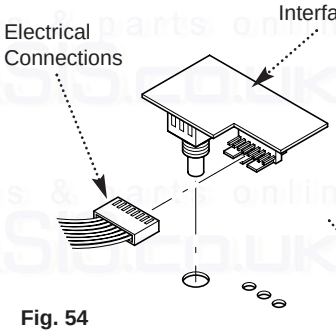

Fig. 54

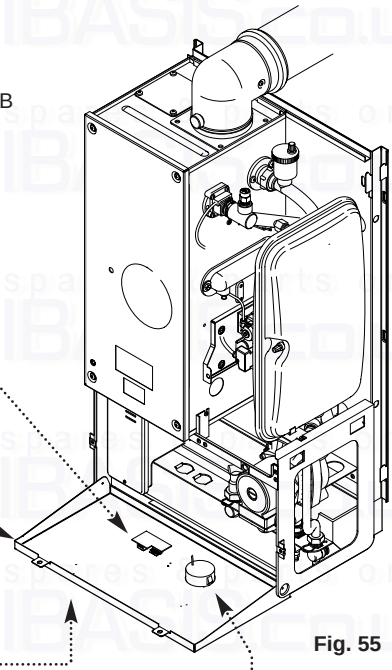

Fig. 55

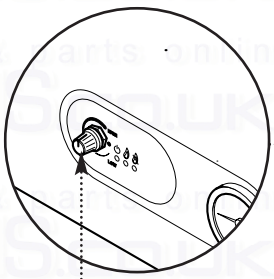

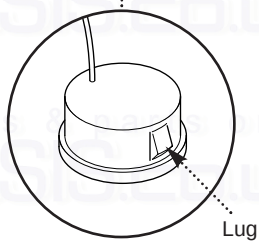

Fig. 57

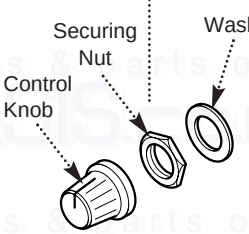

Fig. 53

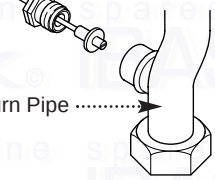

Fig. 56

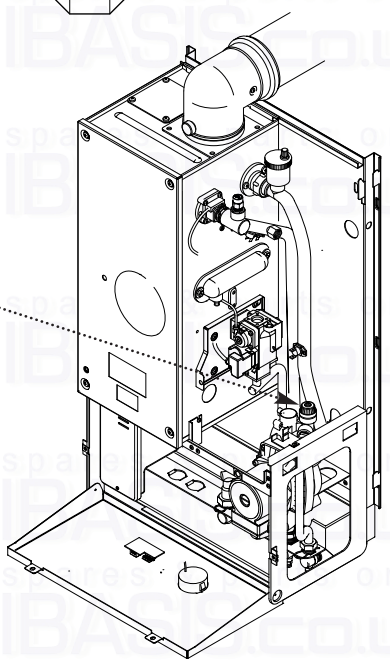

Expansion Vessel removed for clarity

Fig. 58

13.0 CHANGING COMPONENTS

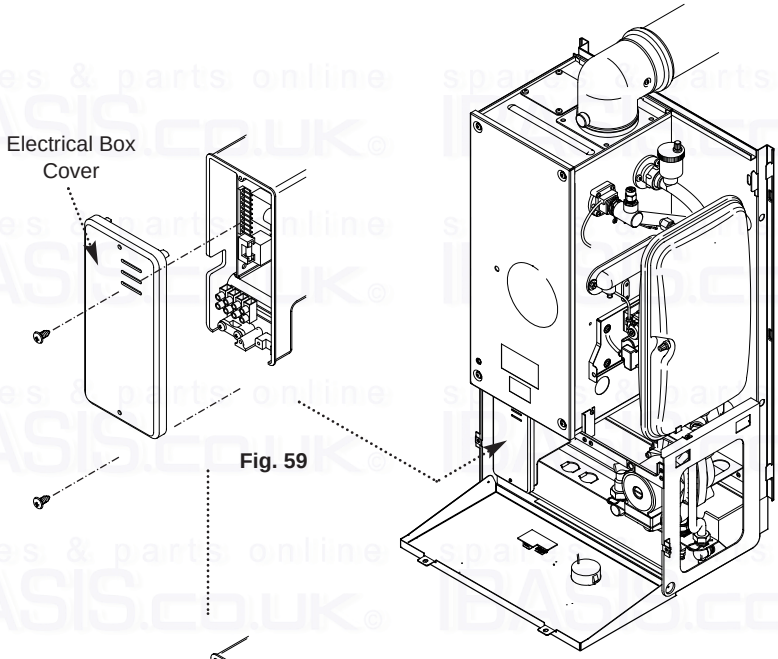

Fig. 59

The control and ignition boards can be accessed on the removal of the main electrical box cover.

1. Remove the two screws securing the main electrical box cover (Fig. 59).

13.13 Control Board (Fig. 60)

1. Slide out the control board (right hand side) and disconnect the electrical connections noting their positions.

2. Check if the two jumper connections have been removed from the board - see section 8.7. If so, remove the jumpers from the new control board.

3. Fit the new control board and reassemble in reverse order.

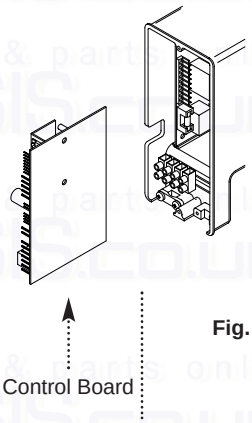

Fig. 60

13.14 Ignition Board (Fig. 61)

1. Remove the control board, (13.5) and slide out the ignition board (left hand side) and disconnect the electrical connections noting their positions.

2. Fit the new ignition board and reassemble in reverse order.

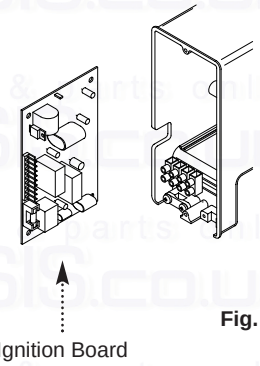

Fig. 61

13.15 Transformer (Fig. 62)

1. Remove the transformer connection from the control board.

2. The transformer is mounted to the right of the electrical box.

3. Remove the two transformer mounting screws and remove the transformer.

4. Fit the new transformer and reassemble in reverse order.

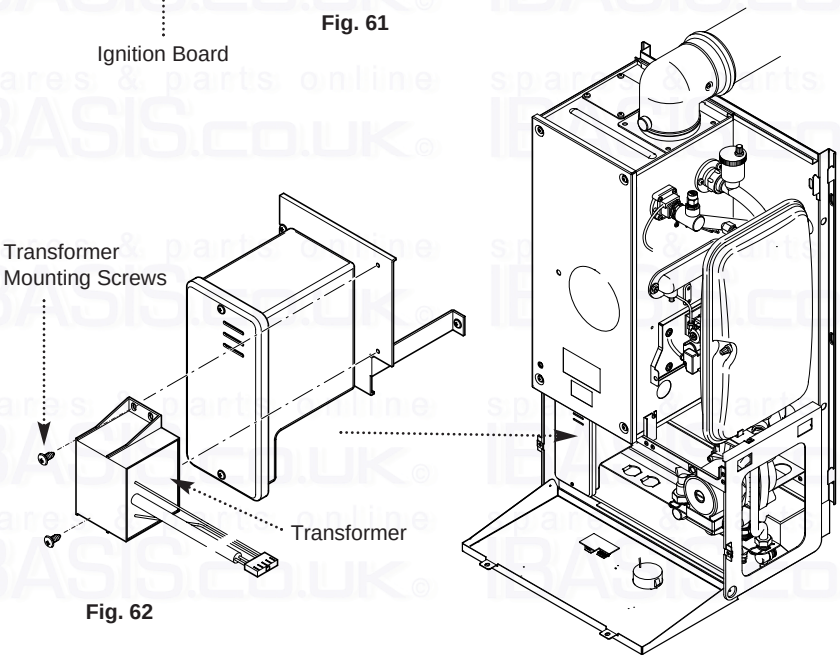

Fig. 62

The fan and venturi, gas valve, injector pipe, condensate trap, fan protection sensor, spark and sensing electrodes can be accessed and changed on the removal of the airbox door panel.

1. Remove the airbox door panel by loosening the four 1/4 turn screws (Fig. 63).

13.16 Spark and Sensing Electrodes (Fig. 64)

1. Disconnect the supply to the electrodes noting their positions (left to right):

Spark	-	Opaque cable
Earth	-	Black cable
Sensing	-	White cable

2. Remove the two screws securing each of the electrodes to the combustion box door and remove the electrodes.

3. Fit the new electrodes and reassemble in reverse order.

NOTE: The spark electrode sleeve should always cover the joint in the electrode lead to prevent tracking.

13.17 Fan (Fig. 65)

1. Loosen the screw holding the injector pipe into the venturi.

2. Remove the electrical connections to the fan protection sensor on the fan.

3. Remove the wing nuts securing the fan to the base of the combustion box.

4. Lower the fan and remove.

5. Disconnect the electrical supply from the right hand rear of the fan.

6. If changing the fan remove the screws securing the venturi and fan protection sensor bracket, noting the positions of the injector opening and sensor bracket, fix them to the new fan.

7. Fit the new fan and reassemble in reverse order.

The injector pipe, condensate trap and gas valve can be changed after the removal of the fan.

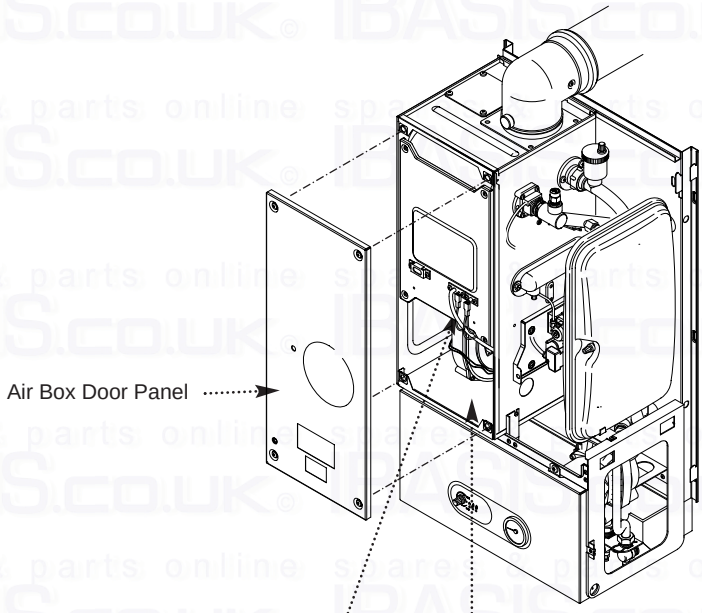

Fig. 63

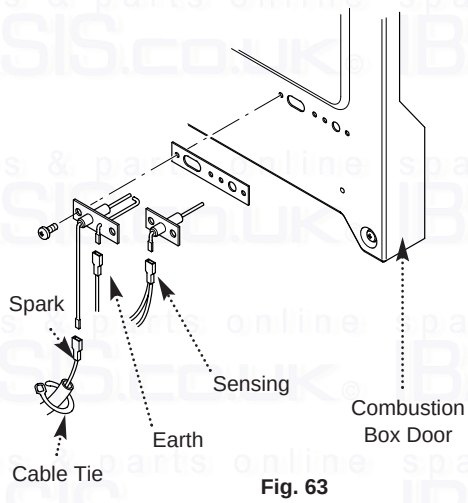

Fig. 63

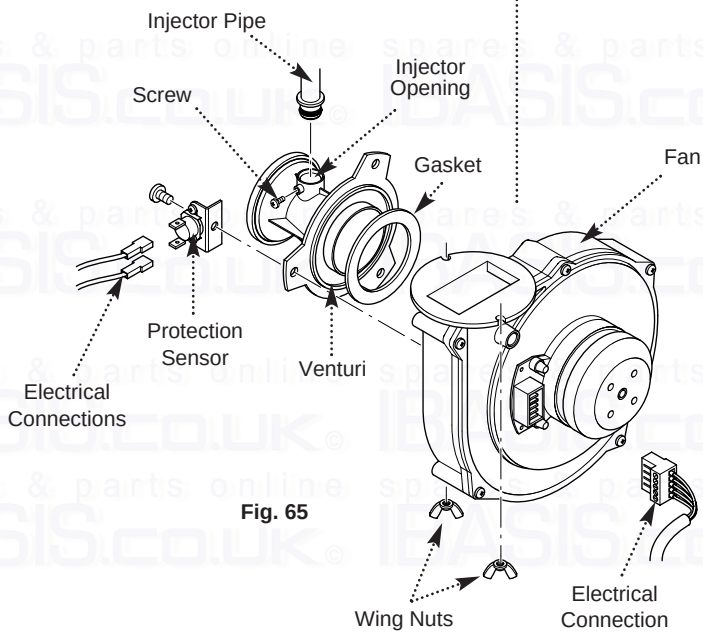

Fig. 65

13.0 CHANGING COMPONENTS

The removal of the fan is necessary to enable the changing of the injector pipe, condensate trap and gas valve (see section 13.17).

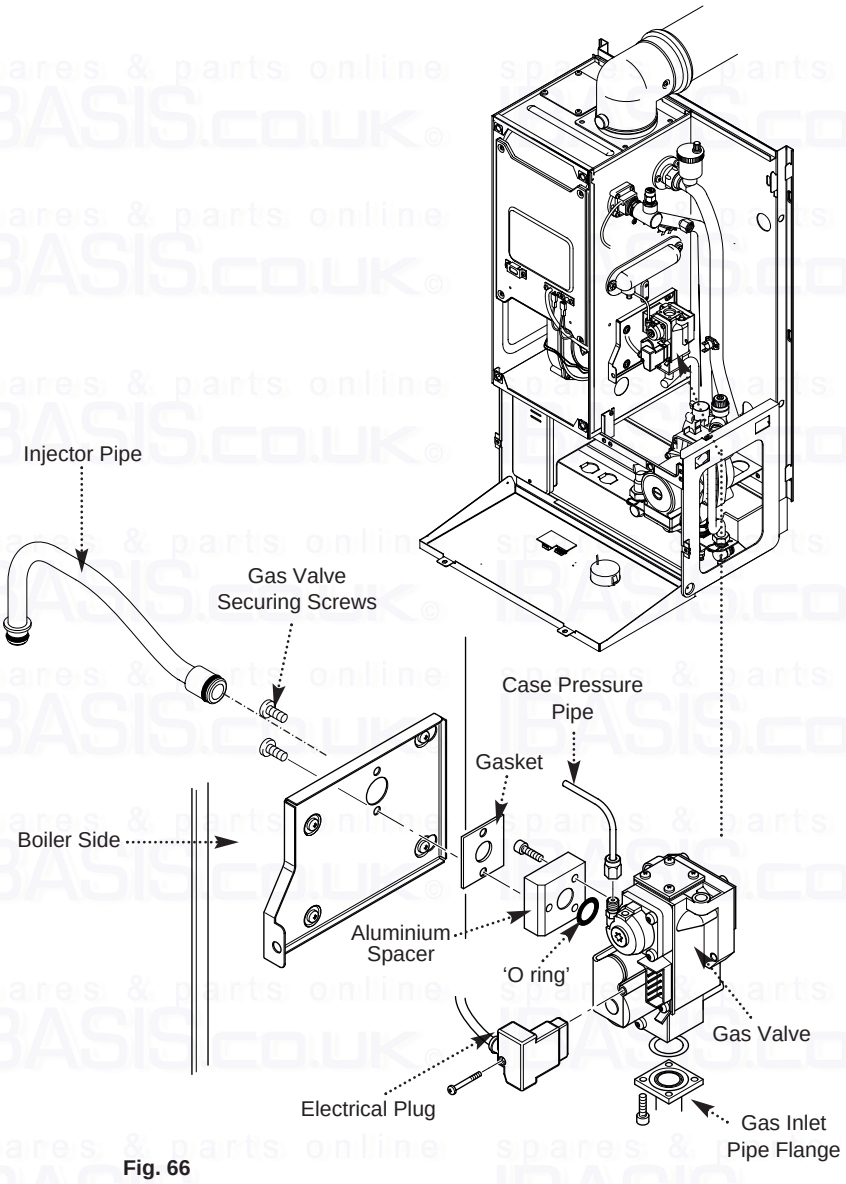

Fig. 66

13.18 Injector Pipe (Fig. 66)

1. Remove the injector pipe by pulling out from the 'O' ring joint in the gas valve.

2. Fit the new injector pipe and reassemble in reverse order.

13.19 Gas Valve (Fig. 66)

1. Release user interface and pivot downward for better access.

2. Remove the four screws securing the gas inlet pipe flange to the gas valve.

3. Undo the case pressure pipe from the gas valve.

4. Undo the screw and disconnect the electrical plug from the gas valve.

5. Remove the two gas valve securing screws from inside the air box holding the gas valve.

6. Remove the gas valve from the airbox side.

7. Remove the nut union, aluminium spacer and its gasket from the gas valve.

8. Fit the nut union, aluminium spacer and its gasket to the new valve.

9. Fit the new gas valve and reassemble in reverse order.

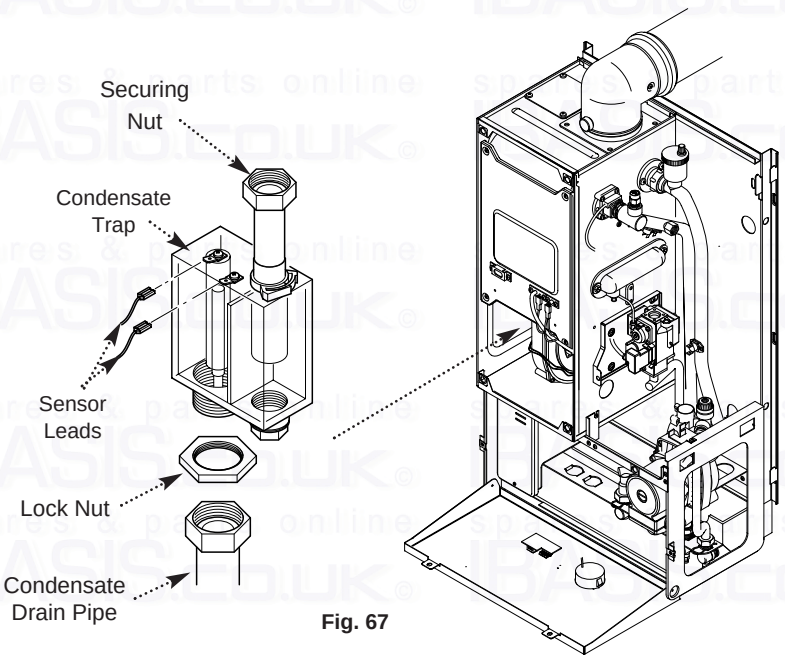

Fig. 67

13.20 Condensate Trap (Fig. 67)

1. Disconnect the condensate trap from the base of the heat exchanger.

2. Disconnect the condensate drain (outside the boiler) from the condensate trap.

3. Undo the condensate trap lock nut.

4. Remove the condensate trap from the boiler.

5. Disconnect the sensor leads.

Fit the new condensate trap and reassemble in reverse order.

13.0 CHANGING COMPONENTS

The burner and heat exchanger can be changed after removal of the combustion box door. To change the heat exchanger, the fan and burner must be removed first (see section 13.17 & 13.21).

1. Remove the combustion box door by removing the four securing screws (Fig. 68).

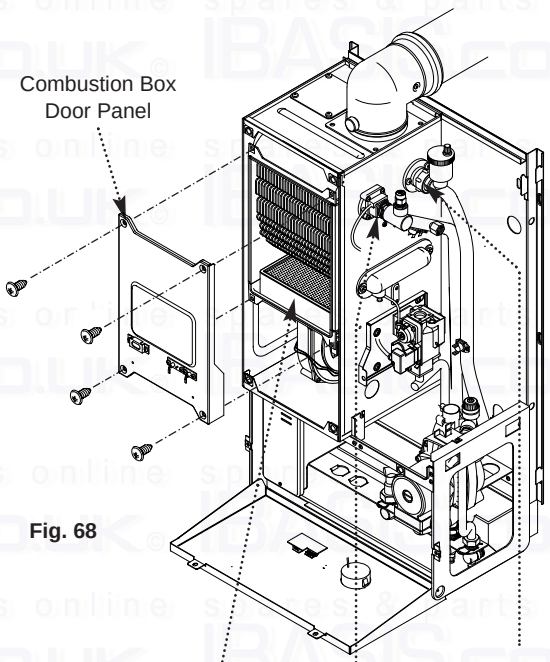

Fig. 68

13.21 Burner (Fig. 69)

WARNING: The burner skin is fragile: Handle with care

1. Remove the two screws securing the burner to the base of the combustion box.

2. Remove the burner carefully from the combustion box base.

3. Fit the new burner and reassemble in reverse order.

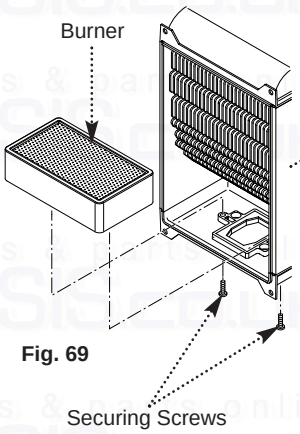

Fig. 69

13.22 Heat Exchanger

1. Drain the boiler (see section 13.1 paragraph 2 & 3).

2. Remove all components in the base of the airbox.

3. Remove the screws securing the flow switch and return connections and remove the connections (Fig. 70).

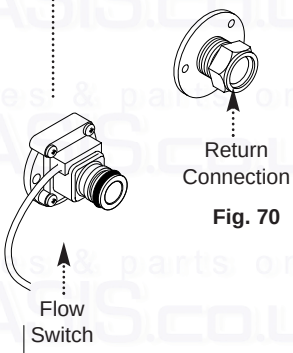

Fig. 70

4. Remove the electrical connections from the P.C.B.s.

5. Remove the screws securing the heat exchanger manifold and remove the manifold (Fig. 71).

6. Lift the heat exchanger assembly (Fig. 72) and rotate the bottom upwards whilst pulling it forwards out of the airbox.

7. Fit the new heat exchanger and reassemble in reverse order.

8. Recommission the boiler and check the inhibitor concentration (see Section 6.2 and 10.1).

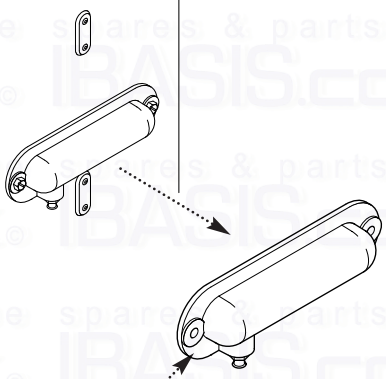

Fig. 71

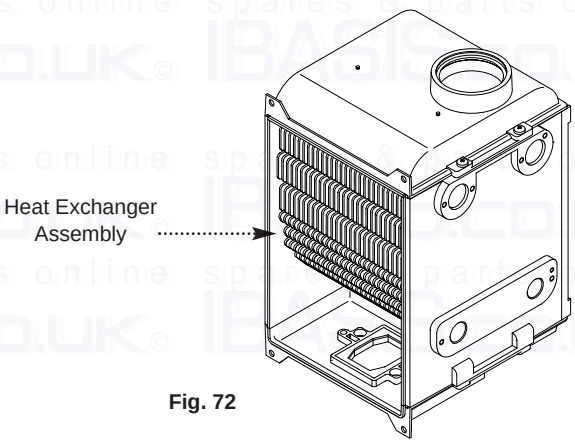

Fig. 72

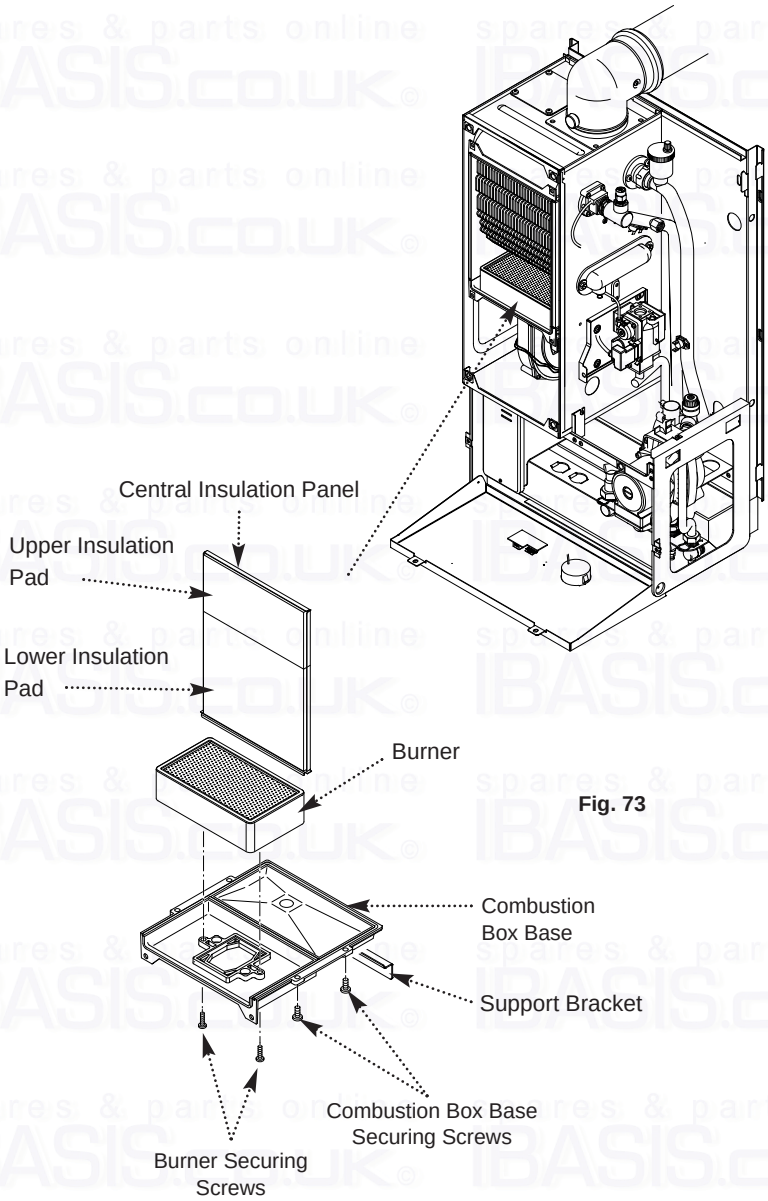

Fig. 73

13.23 Heat Exchanger Lower Insulation Pad (Fig. 73)

1. Remove all components in the base of the airbox.

2. Remove the burner (see section 13.21).

3. Remove the four bolts securing the combustion box base.

4. Remove the combustion box base.

5. Pull the central insulation panel down from the centre of the heat exchanger and remove the lower insulation pad.

6. Fit the new insulation pad and reassemble in reverse order.

13.24 Heat Exchanger Upper Insulation Pad (Fig. 73)

1. Remove all components in the base of the airbox.

2. Remove the burner (see section 13.21).

3. Remove the heat exchanger (see section 13.22).

4. Remove the four bolts securing the combustion box base.

5. Remove the combustion box base.

6. Pull the central insulation panel down from the centre of the heat exchanger.

7. Fit the new insulation pad and reassemble in reverse order.

14.0 SHORT PARTS LIST

Short Parts List

Key No.	G.C. No.	Description	Manufacturers Part No.
40	E06 058	Flow Temperature Thermistor (Red)	240670
36	E06 059	Flow Switch	242459
41	E06 060	Safety Thermostat (Black)	242235
64	E06 064	Control PCB	5106884
63	E06 065	Ignition PCB	241838
65	E06 066	Transformer	240236
19	E06 074	Fan	242472
32	E06 075	Gas Valve	242473
67	E06 079	Interface PCB	241839
12	E06 085	Viewing Window	242484
22	E06 086	Condensate Trap	242485
14	E06 091	Electrodes Kit	242490
29	E06 093	Burner Assy	242492
8	E06 097	Heat Exchanger Assy	242497
46	E02 762	Pump	241157

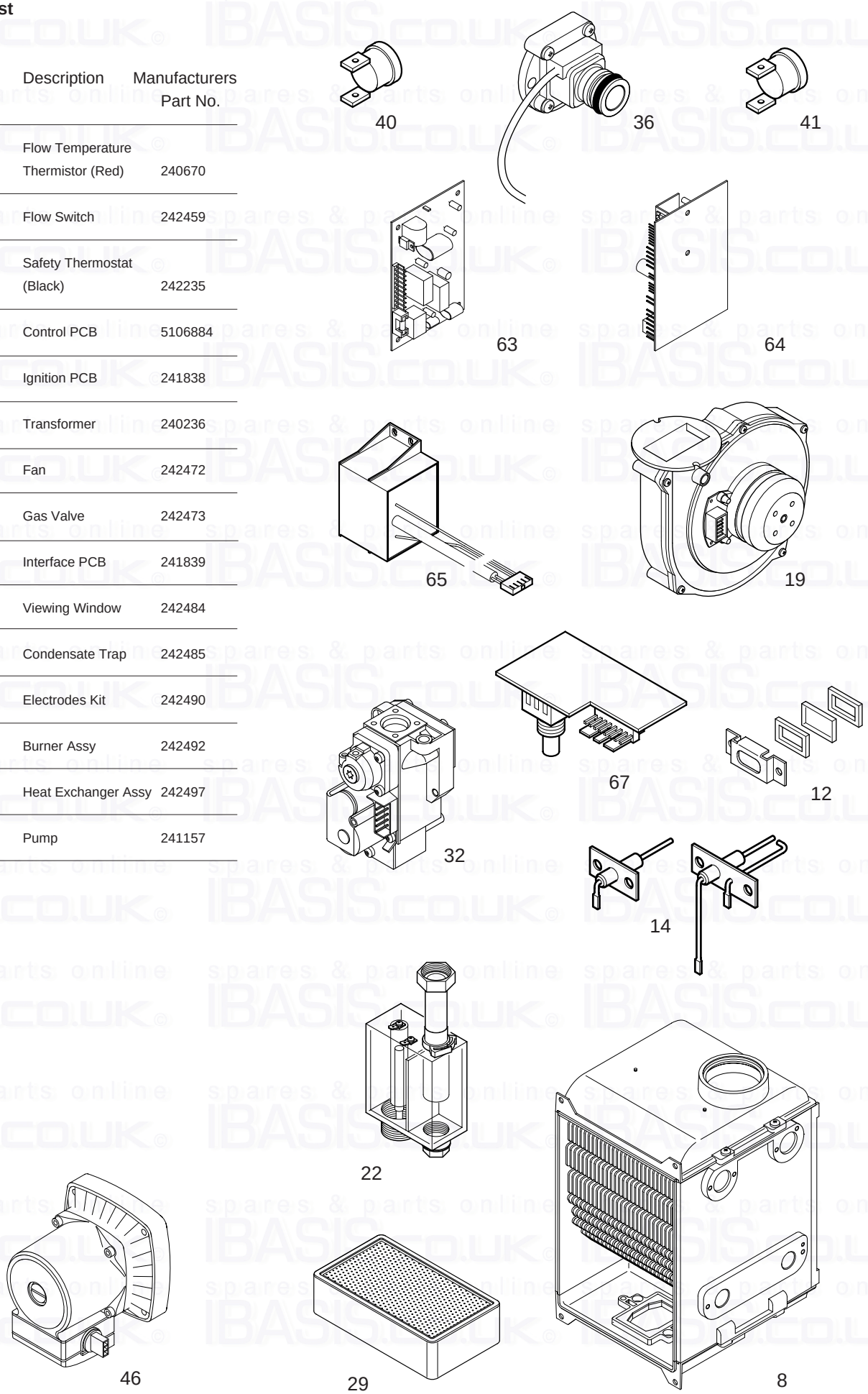

15.0 FAULT FINDING

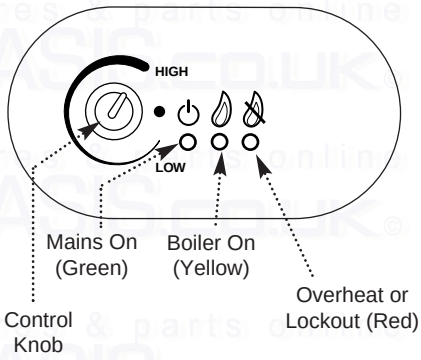

Please Check Following Points Before Going Through The Fault Finding Chart.

- Check electrical system earth continuity, short circuit, resistance to earth, fuse failure and a minimum voltage of 195 is present at input connections on boiler, check internal fuse is OK, unit is not in lockout.
- There is an adequate gas supply pressure at the inlet, (preferred minimum pressure is natural gas 19.5 mbar).
- All isolating valves are open and both the boiler and the system are vented.
- Check installation is correct, including the flue system.

IMPORTANT

If the system requirements are greater than 22.0kW (75,000 Btu/hr) the appliance can be updated to 30.18kW (102,980 Btu/hr). See section 8.7

Mains LED off ?
- YES → Go to **MAINS LED OFF** section of the fault finding instructions.
- NO ↓

Mains LED flashing ?
- YES → Go to **MAINS LED FLASHING** section of the fault finding instructions.
- NO ↓

Continuous prepurge or Lockout LED flashing 5 times a second ?
- YES → Go to **DRY-FIRE LOCKOUT** section of the fault finding instructions.
- NO ↓

Lockout LED flashing once a second ?
- YES → Go to **SAFETY LOCKOUT** section of the fault finding instructions.
- NO ↓

Lockout LED flashing once every 4 seconds ?
- YES → Go to **THERMISTOR OPEN CIRCUIT** section of the fault finding instructions.
- NO ↓

Lockout LED continuously on ?
- YES → Go to **IGNITION LOCKOUT** section of the fault finding instructions.
- NO ↓

Fan not running
- YES → Go to **NO FAN** section of the fault finding instructions.
- NO ↓

Lockout will not reset ?
- YES → Go to **NO LOCKOUT RESET** section of the fault finding instructions.

Mains LED Off

Is boiler supply fuse OK ?
- NO → Replace with 3A fuse.
- YES ↓

Is there 230 V at mains input terminal block **(A)** ?
- NO → No mains supply to boiler.
- YES ↓

Is there 230 V at mains input connection to control PCB **(B)** ?
- NO → Wiring from mains input terminal block to control PCB faulty.
- YES ↓

Is there 230 V at control PCB transformer mains connection **(C)** ?
- NO → Replace control PCB.
- YES ↓

Is there 24 V ac at control PCB transformer 24V connection **(D)** ?
- NO → Replace transformer.
- YES ↓

Is control PCB fuse F2 OK ?
- NO → Check for short circuits on control PCB and fan. If OK replace fuse.
- YES ↓

Is wiring from control PCB to interface PCB OK **(E)** ?
- NO → Rectify wiring
- YES ↓

Does boiler produce heat ?
- NO → Replace control PCB.
- YES ↓

Replace interface PCB.

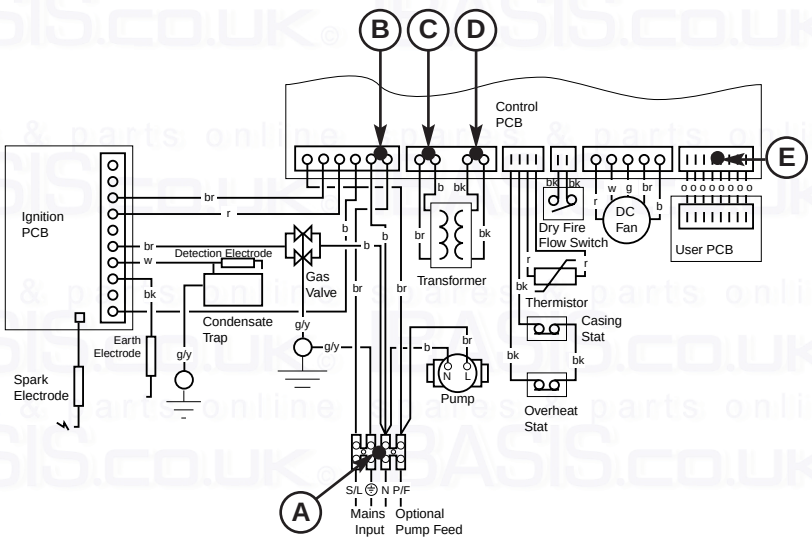

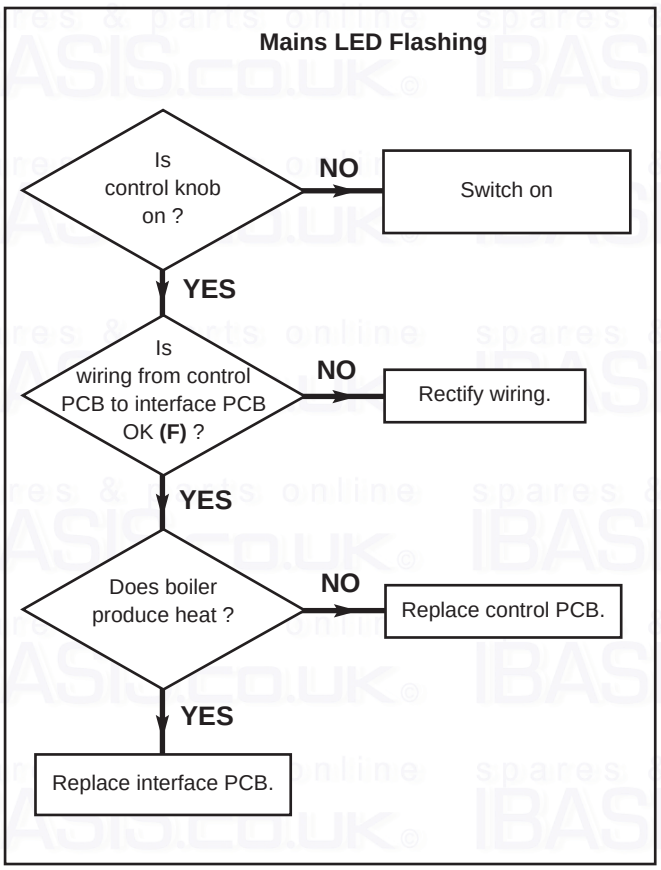
Mains LED Flashing
Is control knob on ?
NO
Switch on
YES
Is wiring from control PCB to interface PCB OK (F) ?
NO
Rectify wiring.
YES
Does boiler produce heat ?
NO
Replace control PCB.
YES
Replace interface PCB.

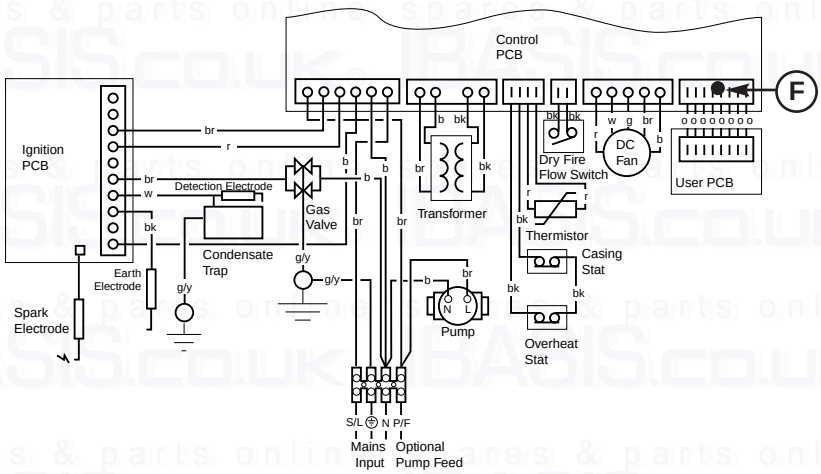
Control PCB
F
Ignition PCB
Detection Electrode
Gas Valve
Transformer
Dry Fire Flow Switch
DC Fan
User PCB
Thermistor
Casing Stat
Condensate Trap
Earth Electrode
Spark Electrode
Pump
Overheat Stat
S/L N P/F
Mains Input
Optional Pump Feed

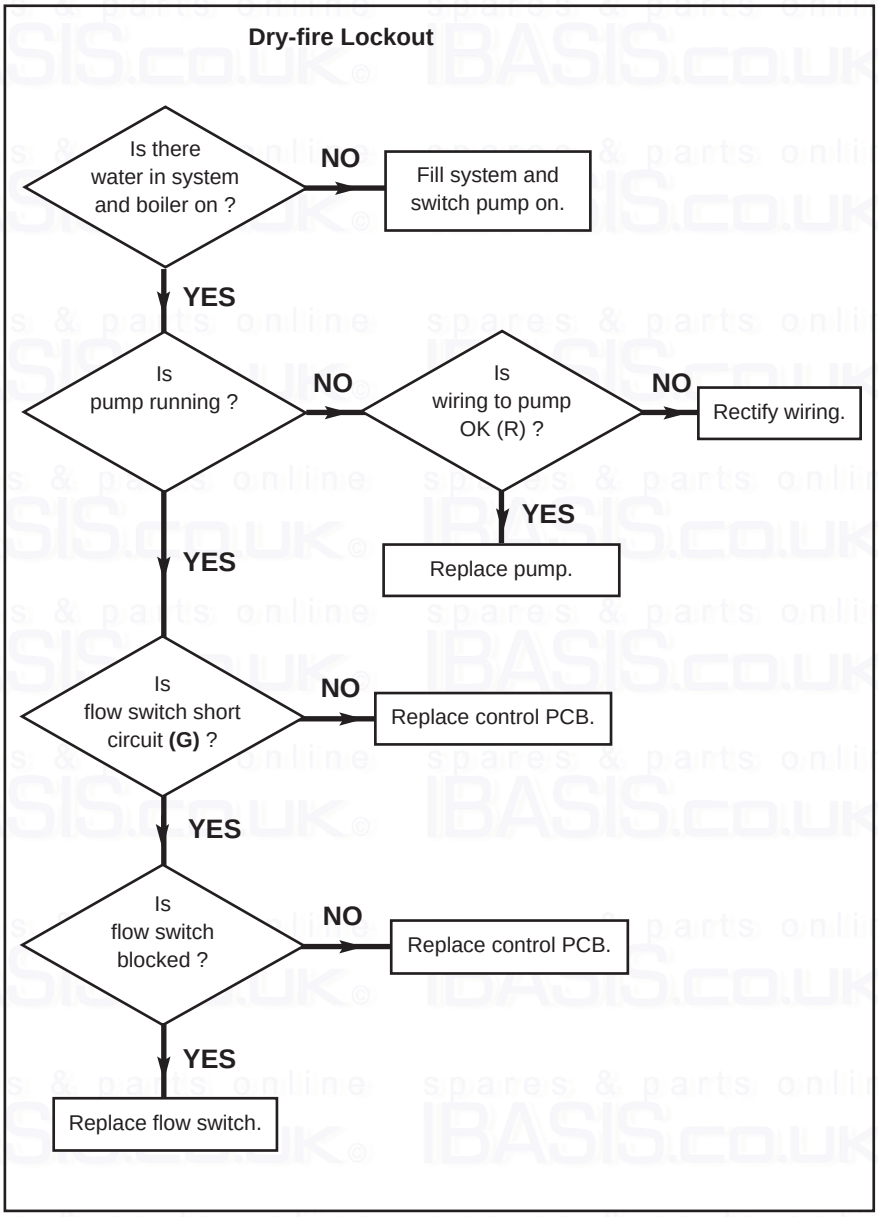
Dry-fire Lockout
Is there water in system and boiler on ?
NO
Fill system and switch pump on.
YES
Is pump running ?
NO
Is wiring to pump OK (R) ?
NO
Rectify wiring.
YES
Replace pump.
YES
Is flow switch short circuit (G) ?
NO
Replace control PCB.
YES
Is flow switch blocked ?
NO
Replace control PCB.
YES
Replace flow switch.

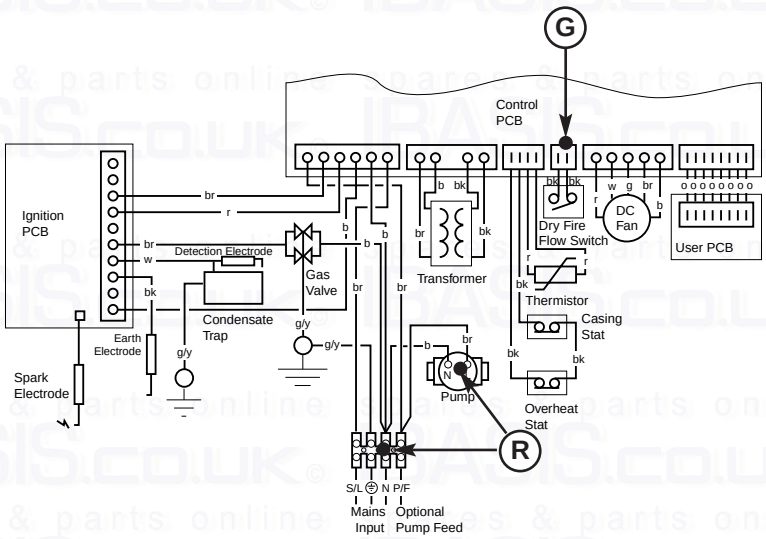
G
Control PCB
Ignition PCB
Detection Electrode
Gas Valve
Transformer
Dry Fire Flow Switch
DC Fan
User PCB
Thermistor
Casing Stat
Condensate Trap
Earth Electrode
Spark Electrode
Pump
Overheat Stat
R
S/L N P/F
Mains Input
Optional Pump Feed

15.0 FAULT FINDING

Safety Lockout

When flow temp < 60°C. Safety thermostat open circuit ? (measured at safety thermostat)
- YES → Replace safety thermostat (black)
- NO ↓

When fan ambient temp < 90°C. Fan protection stat open circuit ? (measured at fan protection thermostat)
- YES → Replace fan protection stat.
- NO ↓

Are control PCB safety thermostat connections open circuit ? **(H)**
- YES → Wiring from control PCB to safety or fan protection thermostats faulty.
- NO ↓

Is flow temperature thermistor resistance between 0.5kΩ and 20kΩ ? (measured at flow temperature thermistor)
- NO → Replace flow temperature thermistor (red)
- YES ↓

Is combustion box door seal damaged or not in place ?
- YES → Replace combustion box door seal.
- NO ↓

Replace control PCB.

Thermistor Open Circuit

Open circuit across thermistor connections ?
- YES → Replace thermistor
- NO ↓

Open circuit across thermistor connections on control PCB ?
- YES → Wiring from thermistor to logic PCB faulty
- NO ↓

Replace control PCB

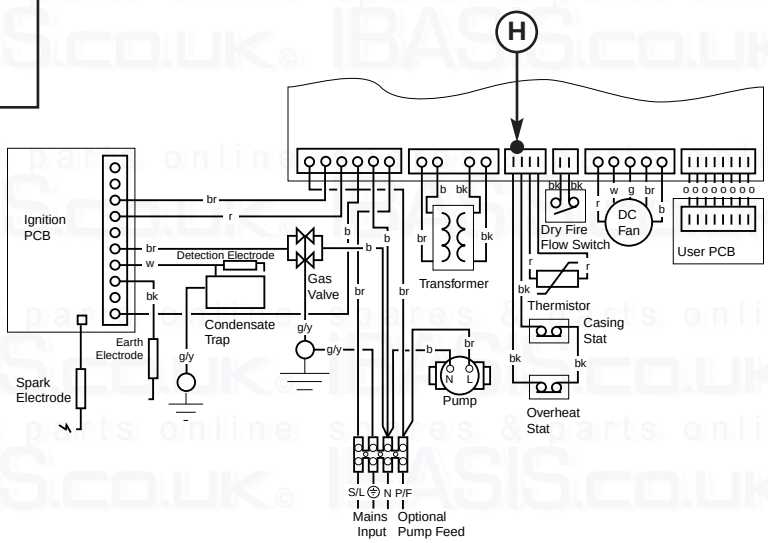

15.0 FAULT FINDING

No Fan

Is flow temperature thermistor between 0.5kΩ and 20kΩ ? (measured at flow temperature thermistor)

- NO → Replace flow temperature thermistor (red)
- YES ↓

Is control PCB sensor connections 0.5kΩ to 20kΩ ? **(I)**

- NO → Wiring from control PCB to sensor faulty.
- YES ↓

Replace control PCB.

No Lockout Reset

Is flow temperature > 60° C ?

- YES → Flow overheat thermostat will not reset until flow temperature < 60° C.
- NO ↓

Is fan ambient temperature > 90° C ?

- YES → Fan protection thermostat will not reset until casing temperature < 90° C.
- NO ↓

Is water in system and pump on ?

- → Dry-fire lockout cannot be reset until there is water in the system and the pump is on.

Control knob switch short circuit when on and open circuit when off ? **(K)**

- NO → Replace interface PCB.
- YES ↓

Control PCB control knob switch pins short circuit when on and open circuit when off ? **(J)**

- NO → Wiring from control PCB to interface PCB faulty.

Replace control PCB.

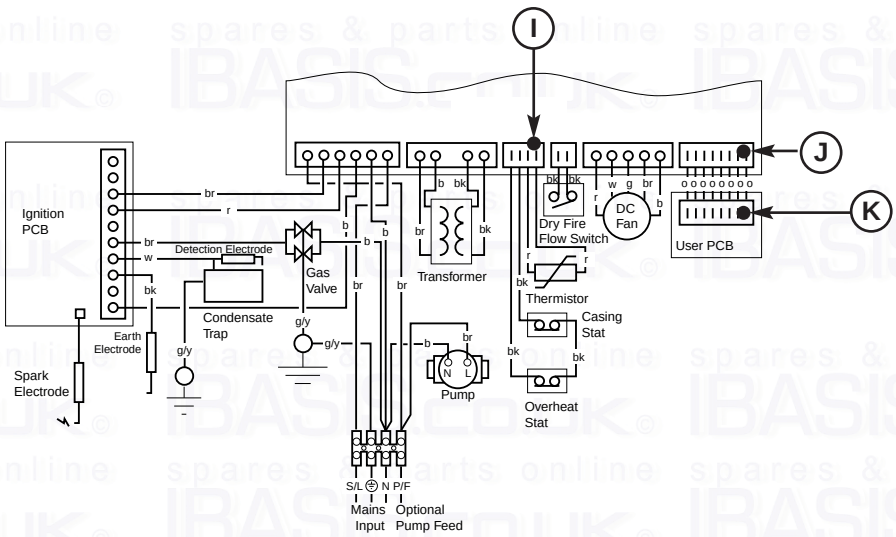

15.0 FAULT FINDING

Ignition Lockout

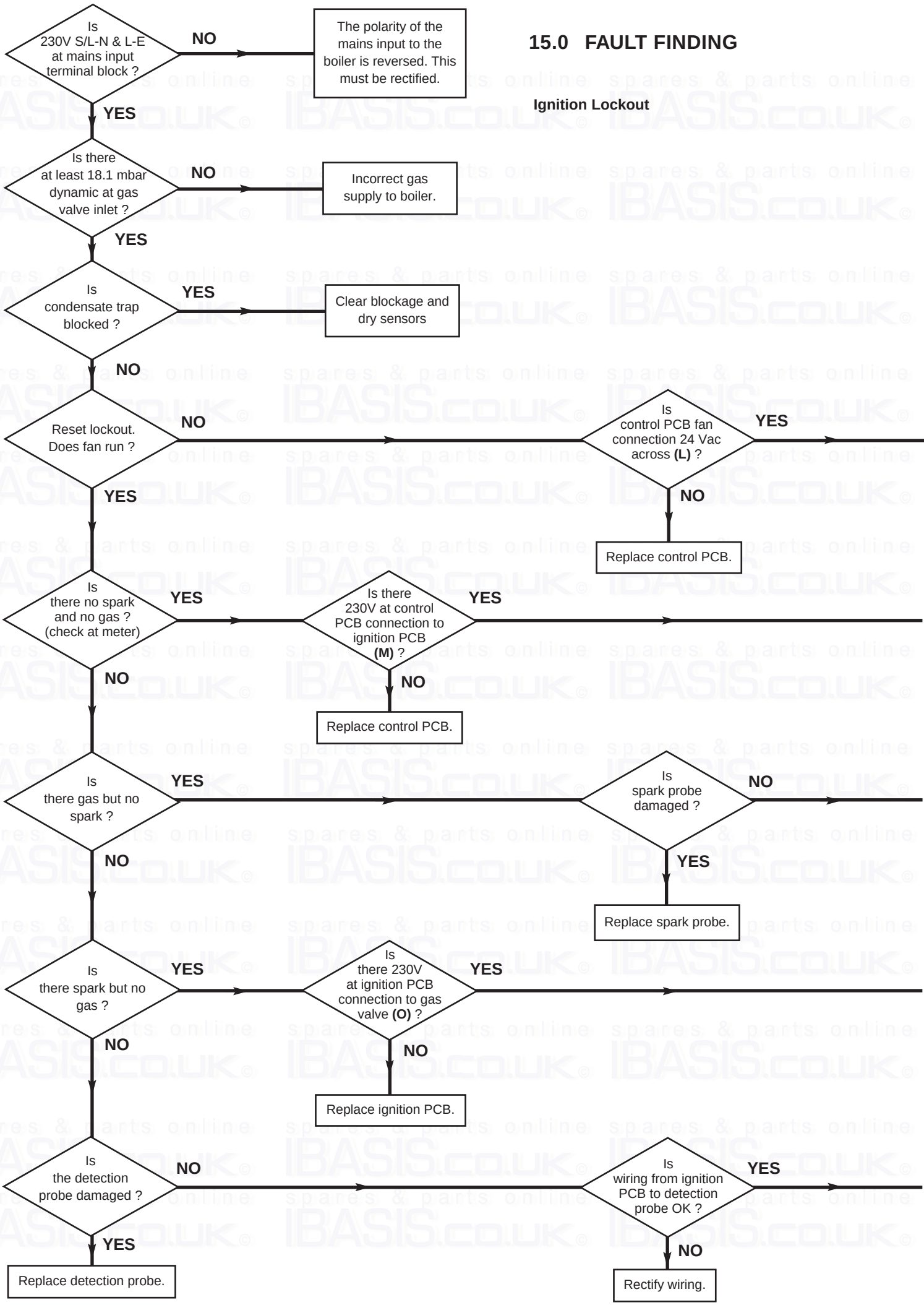

15.0 FAULT FINDING

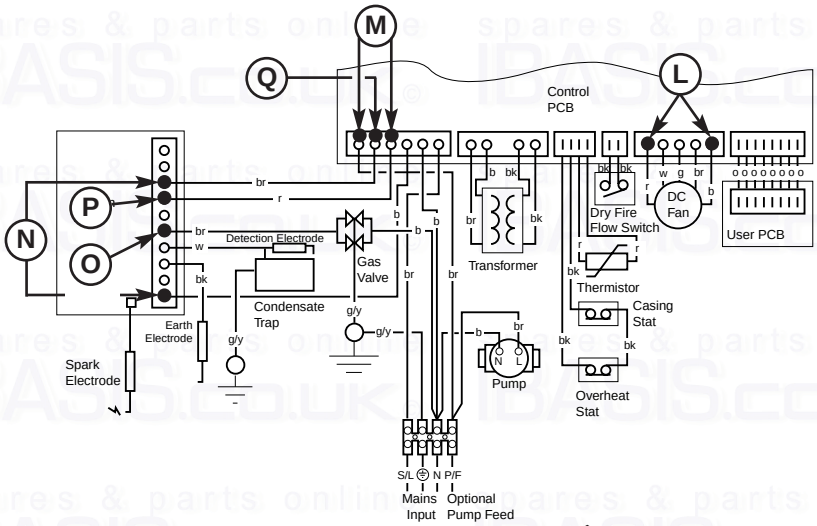

Is fan connection 24Vac across **(L)** ?

YES → Replace fan.

NO → Wiring from control PCB to fan faulty.

Is there 230V at ignition PCB connection to control PCB **(N)** ?

YES → Is ignition PCB fuse OK ?

YES → Replace ignition PCB.

NO → Check for short circuits on ignition PCB and gas valve. If OK replace fuse.

NO → Wiring from control PCB to ignition PCB faulty.

Is spark gap between 3 and 5mm ?

YES → Is wiring from ignition PCB to spark probe OK ?

YES → Replace ignition PCB.

NO → Rectify wiring.

NO → Set spark gap to 4mm.

Is there 230Vdc at the end of the gas valve lead ?

YES → Is sensing tube blocked ?

YES → Unblock Tube.

NO → Replace gas valve.

NO → Replace gas valve lead.

Is there 230V ignition PCB burner on pin to control PCB **(P)** ?

YES → Is there 230V control PCB burner on pin to ignition PCB **(Q)** ?

YES → Replace control PCB.

NO → Burner On wiring from ignition PCB to control PCB faulty.

NO → Replace ignition PCB.

Publication No. 5106703 - Iss. **06** (08/2003)

General Enquiries (GB)
Tel. 08706 060 780

Technical (GB)
Tel. 08706 049 049

Service (GB)
Tel. 08706 096 096
Fax. 01926 410 006

Literature Request (GB)
Tel. 08706 060 623

Technical (IE)
Tel. 1850 560570

All descriptions and illustrations provided in this leaflet have been carefully prepared but we reserve the right to make changes and improvements in our products which may affect the accuracy of the information contained in this leaflet. All goods are sold subject to our standard Conditions of Sale which are available on request.

BAXI POTTERTON
A Trading Division of Baxi Heating UK Ltd
Brownedge Road Bamber Bridge Preston Lancashire PR5 6SN
After Sales Service 08706 096 096 Technical Enquiries 08706 049 049
Website www.potterton.co.uk

A BAXI GROUP company