POTTERTON

See inside cover for models covered by these instructions

# Installation & Service Instructions

# Ultra 2

## Wall Mounted Fan Assisted Balanced Flue Gas System Boilers

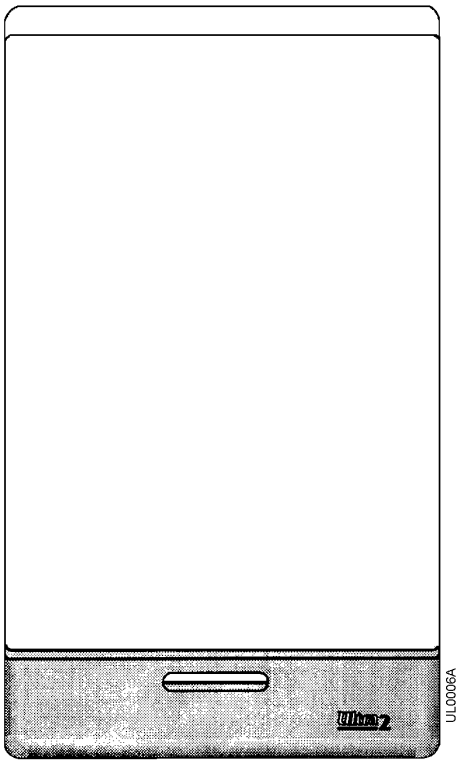


**THE GAS SAFETY (INSTALLATION AND USE) REGULATIONS 1994.**

‘‘ In your own interest, and that of safety, it is law that all gas appliances are installed by competent persons, in accordance with the above regulations. Failure to install appliances correctly could lead to prosecution.’’

The polythene bags used for packaging are a potential hazard to babies and young children and MUST BE DISPOSED OF IMMEDIATELY.

Installation must be in accordance with the Installation & Service Instructions and the rules in force.

**LEAVE THESE INSTRUCTIONS WITH THE USER FOR USE ON FUTURE CALLS**

**For Use With Natural Gas (G20) Only At 20mbar**
**For Use in GB & IE**

**IMPORTANT**
PLEASE READ THIS BOOK BEFORE INSTALLING, OPERATING OR SERVICING THIS BOILER.

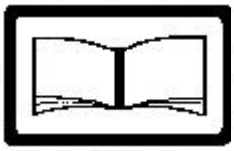

# Contents - Page 2


**Technical Data ..... 3**

**Introduction ..... 4**

**1. Installation Requirements ..... 4**
1.1 Health & Safety Information ..... 4
1.2 Codes of Practice ..... 4
1.3 Gas Supply ..... 5
1.4 Electricity Supply ..... 5
1.5 Location of Boiler ..... 5
1.6 Air Supply ..... 8
1.7 Flue System ..... 8
1.8 Water Connections ..... 8
1.9 Sealed System requirements ..... 8

**2. Installation ..... 10**
2.1 Unpack and Prepare the Boiler ..... 10
2.2 Options available for Ultra 2 ..... 11
2.3 Fit the Optional Wall Spacing Kit ..... 12
2.4 Install the Boiler & Rear Flue ..... 13
2.5 Install the Boiler & Side Flue ..... 15
2.6 Flue Extension ..... 17
2.7 Fit the Optional Vertical Balanced Flue ..... 18
2.8 Fit the Optional Vertex Flue ..... 21
2.9 Fit the Optional Fit From the Inside Flue ..... 24
2.10 Connect the Power Supply Cable ..... 29
2.11 Install the Ultra 2 Programmer ..... 30
2.12 Connect the Gas Supply ..... 30
2.13 Connect the Water System & Vent the Boiler ..... 31

**3. Commissioning ..... 32**
3.1 Commission the Boiler ..... 32
3.2 Check the Water System ..... 34
3.3 Balance the System ..... 34
3.4 Complete the Boiler ..... 34
3.5 Light the Boiler ..... 34
3.6 Advise the User ..... 35

**4. Annual Service ..... 35**

**5. Routine Maintenance ..... 36**
5.1 Remove the Case ..... 36
5.2 Dismantle the Boiler ..... 36
5.3 Cleaning the Boiler ..... 36
5.4 Re-assemble the Boiler ..... 36

**6. Replacement Of Parts ..... 38**
6.1 General Access ..... 38
6.2 Gas Valve ..... 39
6.3 Gas Valve Solenoids ..... 39
6.4 Pump ..... 40
6.5 Air Flow Pressure Switch ..... 40
6.6 Diverter Valve Head (Ultra 2 Dv Models) ..... 41
6.7 Pressure Gauge ..... 41
6.8 Pressure Relief Valve ..... 42
6.9 By-Pass Valve ..... 42
6.10 Ignition Circuit Board ..... 43
6.11 Re-Set Switch ..... 43
6.12 Potterton Internal Programmer (If Fitted) ..... 43
6.13 Test Switch ..... 44
6.14 Overheat Cut-Off Device ..... 44
6.15 Spark Electrode/Electrode Lead ..... 45
6.16 Main Burner ..... 46
Pilot Burner ..... 46
Pilot Injector ..... 46
Main Burner Injector ..... 46
6.17 Fan ..... 47
6.18 Combustion Chamber Insulation Panels ..... 48
6.19 Boiler Thermostat ..... 48
6.25 Heat Exchanger ..... 49
6.26 Expansion Vessel ..... 50

**7. Wiring Diagrams ..... 51**
Functional Flow Wiring Diagram ..... 51
Wiring Diagrams - Ultra 2Dv ..... 52
Wiring Diagrams - Ultra 2 ..... 53

**8. Fault Finding ..... 54**

**9. Short List of Spares ..... 58**


**Important**
**The Ultra 2 range of boilers can only be used with the Ultra 2 range of flue systems.**

The models covered by these instructions are:-

Ultra 2 30Dv - G.C. No. 41 607 50
Ultra 2 40Dv - G.C. No. 41 607 51
Ultra 2 50Dv - G.C. No. 41 607 52
Ultra 2 60Dv - G.C. No. 41 607 53
Ultra 2 80Dv - G.C. No. 41 607 54

Ultra 2 30 - G.C. No. 41 607 55
Ultra 2 40 - G.C. No. 41 607 56
Ultra 2 50 - G.C. No. 41 607 57
Ultra 2 60 - G.C. No. 41 607 58
Ultra 2 80 - G.C. No. 41 607 59

Ultra 2 30DvP - G.C. No. 41 607 65
Ultra 2 40DvP - G.C. No. 41 607 66
Ultra 2 50DvP - G.C. No. 41 607 67
Ultra 2 60DvP - G.C. No. 41 607 68
Ultra 2 80DvP - G.C. No. 41 607 69

Ultra 2 30P - G.C. No. 41 607 70
Ultra 2 40P - G.C. No. 41 607 71
Ultra 2 50P - G.C. No. 41 607 72
Ultra 2 60P - G.C. No. 41 607 73
Ultra 2 80P - G.C. No. 41 607 74

Dv = Diverter Valve  P = Programmer fitted

# Technical Data - Page 3

The boiler model and serial number are given on the data badge.
The boiler data label is on the left hand side of the chassis next to the gas valve.

| Boiler models | | 30 | 40 | 50 | 60 | 80 |
|---|---|---|---|---|---|---|
| Burner type (Aeromatic) | | AC13/112508 | AC13/112509 | AC13/112510 | AC13/112506 | AC13/112507 |
| Burner injector | | Bray 23/800 | Bray 23/1100 | Bray 23/1350 | Bray 23/1600 | Bray 23/2400 |
| Pilot injector | | SIT 0.977.142 marked 33 | | | | |
| Pilot flame | | 35 to 40 mm | | | | |
| Spark gap | | 3.0 to 4.0 mm | | | | |
| Ignition | | Intermittent pilot | | | | |
| Max. Weight (un-packed) | | 46.3 kg | 46.6 kg | 46.9 kg | 47.9 kg | 49.6 kg |
| Max. lifting weight (installing) | | 37.6 kg | 37.9 kg | 38.2 kg | 39.1 kg | 40.8 kg |
| Water content | | 1.1 litre | 1.2 litre | 1.2 litre | 1.2 litre | 1.4 litre |
| Pump (Myson Compact) | | CP51 | | | CP61 | |
| System expansion vessel | | 10 litre (charge pressure 0.5 bar) | | | | |
| *Water flow rate | | 12.6 1/min | 16.8 1/min | 21.0 1/min | 25.2 1/min | 33.6 1/min |
| *Pump head - Typical | | 3.1/3.3 | 3.0/3.2 | 3.0/3.3 | 2.2/2.6 | 1.8/2.3 |
| Maximum flow temperature | | 82ºC | | | | |
| Design water temperature rise | | 10ºC | | | | |
| Height | | 800 mm | | | | |
| Width | | 450 mm | | | | |
| Depth | | 370 mm | | | | |
| Clearance required for servicing | Top | 50 mm (150 mm if Vertex/Vertical flue kit is to be fitted) | | | | |
| | Bottom | 150 mm | | | | |
| | Front | 500 mm | | | | |
| | Sides | 10 mm | | | | |
| Flue terminal size | | 100 mm dia x 65 mm deep | | | | |
| Water connections | | Compression fittings. See Fig 2. | | | | |
| Gas connection | | Rc ½ (bottom left hand side) | | | | |
| Mid position zone valve - Dv Only | | Myson 22 mm | | | | |
| Gas Rate - Full | | 1.1 $m^3$/h | 1.4 $m^3$/h | 1.8 $m^3$/h | 2.1 $m^3$/h | 2.8 $m^3$/h |

*** Water flow rate and pump head available for a system temperature differential of 10ºC.**

**NOMINAL BOILER RATINGS**

| Boiler models | Output | | Input | | Burner setting pressure (hot) | | 1st step burner pressure | |
|---|---|---|---|---|---|---|---|---|
| | kW | Btu/h | kW | Btu/h | mbar | in wg | mbar | in wg |
| 30 | 5.9 | 20 000 | 7.5 | 25 500 | 6.4 | 2.6 | 6.0 | 2.4 |
| | 8.8 | 30 000 | 11.0 | 37 500 | 13.5 | 5.4 | 6.0 | 2.4 |
| 40 | 8.8 | 30 000 | 11.1 | 38 000 | 7.9 | 3.2 | 5.0 | 2.0 |
| | 11.7 | 40 000 | 14.7 | 50 000 | 13.7 | 5.5 | 5.0 | 2.0 |
| 50 | 11.7 | 40 000 | 14.8 | 50 600 | 9.0 | 3.6 | 4.0 | 1.6 |
| | 14.7 | 50 000 | 18.3 | 62 500 | 14.2 | 5.7 | 4.0 | 1.6 |
| 60 | 14.7 | 50 000 | 18.8 | 64 000 | 10.2 | 4.1 | 4.0 | 1.6 |
| | 17.6 | 60 000 | 22.0 | 75 000 | 14.2 | 5.7 | 4.0 | 1.6 |
| 80 | 17.6 | 60 000 | 22.3 | 76 000 | 8.3 | 3.3 | 4.0 | 1.6 |
| | 23.4 | 80 000 | 29.3 | 100 000 | 14.7 | 5.9 | 4.0 | 1.6 |

# Introduction - Page 4

**Gas Safety (Installation & Use) Regulations 1994.**

This appliance must be installed and serviced by a competent person, in accordance with the above regulations.

In the UK 'Corgi' Registered Installers (including the regions of British Gas Plc) undertake the work to a safe and satisfactory standard.

Failure to install appliances correctly could lead to prosecution.

It is in your own interest, and that of safety, to ensure that the regulations are complied with.

The Ultra 2 boilers are range ratable and are factory set to the maximum output.

The boilers are designed for use on **sealed water systems only**, with an indirect hot water cylinder.

THEY MUST NOT BE CONNECTED TO A DIRECT CYLINDER.

The boilers are for use on Natural Gas (G20) only.

Samples of the Potterton Ultra 2 gas system boilers have been examined by B.S.I., a United Kingdom Notified Body. The range is certified to comply with the essential requirements of the Gas Appliance Directive, the Low Voltage Directive and shows compliance with the Electro Magnetic Compatibility Directive 89/336/EEC and are therefore permitted to carry the CE Mark.

**Delivery & Kits Available**

The unit is delivered in two packages (1) the boiler with fittings and (2) the flue/terminal assembly.

A 1m Flue Extension Kit is available (the total flue length must not exceed 3 m).

An Internal Programmer is also available that fits into the facia.

A Vertex Flue Kt is available which allows the flue to exit vertically from the boiler (maximum length is 4.17 m).
A Vertical Balanced Flue Kit is available which allows the flue to exit vertically from the boiler (maximum length 3.25m).
A Wall Spacing Kit is available which allows pipe-work to run behind the boiler.
A Fit From The Inside Flue Kit is available which allows the flue/terminal assembly to be fitted from inside the building.

# 1. Installation Requirements - Page 4

## 1.1 Health and Safety Information for the Installer and Service Engineer

Under the Consumer Protection Act 1987 and Section 6 of the Health and Safety at Work Act 1974, we are required to provide information on substances hazardous to health.

Small quantities of adhesives and sealants used in the product are cured and present no known hazards.

The following substances are also present.

**Insulation and Seals**
**Material -** Ceramic Fibre. Alumino - Silicone Fibre.
**Description** - Boards, Ropes, Gaskets.
**Known Hazards** - Some people can suffer reddening and itching of the skin. Fibre entry into the eye will cause foreign body irritation. Irritation to respiratory tract.
**Precautions** - People with a history of skin complaints may be particularly susceptible to irritation. High dust levels are only likely to arise following harsh abrasion. In general, normal handling and use will not present discomfort, follow good hygiene practices, wash hands before consuming food, drinking or using the toilet.
**First Aid** - Medical attention must be sought following eye contact or prolonged reddening of the skin.

**Heat Exchanger**
**Material** - Copper with lead/tin coating.
**Description** - Finned copper tube.
**Known Hazards** - Inhalation or ingestion of lead dust or fumes may cause headache and nausea.
**Precautions** - Unused heat exchangers present minimal risk to health other than normal hygiene practices would demand regarding washing before eating etc. Deposits found on or below a heat exchanger that has been in use could contain lead oxide. Avoid inhalation by using a vacuum cleaner in conjunction with other cleaning tools when servicing the boiler.

## 1.2 Codes of Practice

The boiler must be installed in accordance with: The Gas Safety (Installation and Use) Regulations 1994 and the current issue of:-

The Building Regulations, Building Standards (Scotland) Regulations, Local Building Regulations, Model and local Water Undertaking Bye-laws, IEE Wiring Regulations and Health & Safety Document No. 635 "The Electrician At Work Regulations 1989".
Detailed recommendations are stated in the following British Standards: BS6891:1988, BS6798:1987, BS5546:1990, BS5440:1:1990, BS5440:2:1989 and BS5449:1990.

## 1.3 Gas Supply

The meter and supply pipes must be capable of delivering this quantity of gas in addition to the demand from any other appliances in the house.

The complete installation must be tested for gas soundness and purged as described in BS6891.

## 1.4 Electricity Supply

230 / 240V ~ 50Hz via a fused double pole switch with a contact separation of at least 3 mm in both poles adjacent to the boiler. Power consumption is approximately 150W. There must be only one common isolator for the boiler and its control system and it must provide complete electrical isolation.

Fuse the supply at 3 A. The minimum requirement for the power supply cable is that it should be a PVC sheathed cord at least 0.75 mm² (24 x 0.2 mm) (code designation HO5 VV-F or HO5 VVH2-F) as specified in table 16 of BS6500:1984.

All wiring external to the boiler shall comply with the latest IEE Wiring Regulations, and any local regulations which apply.

**WARNING: THIS APPLIANCE MUST BE EARTHED.**

In the event of an electrical fault after installation of the boiler, preliminary electrical systems checks must be carried out i.e. Earth Continuity, Short Circuit, Polarity and Resistance to Earth.

## 1.5 Location of Boiler

The boiler is not suitable for external installation.

The boiler must be mounted on a flat wall which is sufficiently robust to take the weight of the boiler.

The boiler is suitable for installation to a combustible wall e.g. wood cladding, provided that the flue duct is not closer than 25 mm to combustible material. A metal sleeve should be installed to surround the flue duct to provide a 25mm annular space. Further guidance is given in BS5440:1:1990, sub-clauses 3.3 and 4.2.5.

If the boiler is to be installed in a timber framed building it should be fitted in accordance with the British Gas publication- “Guide for Gas Installation in Timber Framed Housing” reference DM2. If in doubt advice must be sought from the local region of British Gas or from Potterton Myson.

The boiler may be installed in any room, although particular attention is drawn to the requirements of the current IEE Wiring Regulations and, in Scotland, the electrical provisions of the Building Standards applicable in Scotland with respect to the installation of the boiler in a room containing a bath or shower.

Where a room-sealed appliance is installed in a room containing a bath or shower, any electrical switch or appliance control, utilising mains electricity should be so situated that it cannot be touched by a person using the bath or shower.
Where the installation of the boiler will be in an unusual position, special procedures may be necessary and BS6798 and BS5546 give detailed guidance on this aspect.

A cupboard or compartment used to enclose the boiler must be designed and constructed specifically for this purpose. An existing cupboard or compartment may be used provided that it is modified for the purpose. Details of essential features of cupboard/compartment design including airing cupboard installations are given in BS6798 and BS5546 and should be complied with.

The boiler requires only the clearances stated in the Technical Data, Page 3, after installation. If it is felt that extra space is required for installation any adjacent kitchen units or fitments may have to be removed.

The boiler must be installed so that the flue terminal is exposed to the external air. It is important that the position of the terminal allows the free passage of air across it at all times.

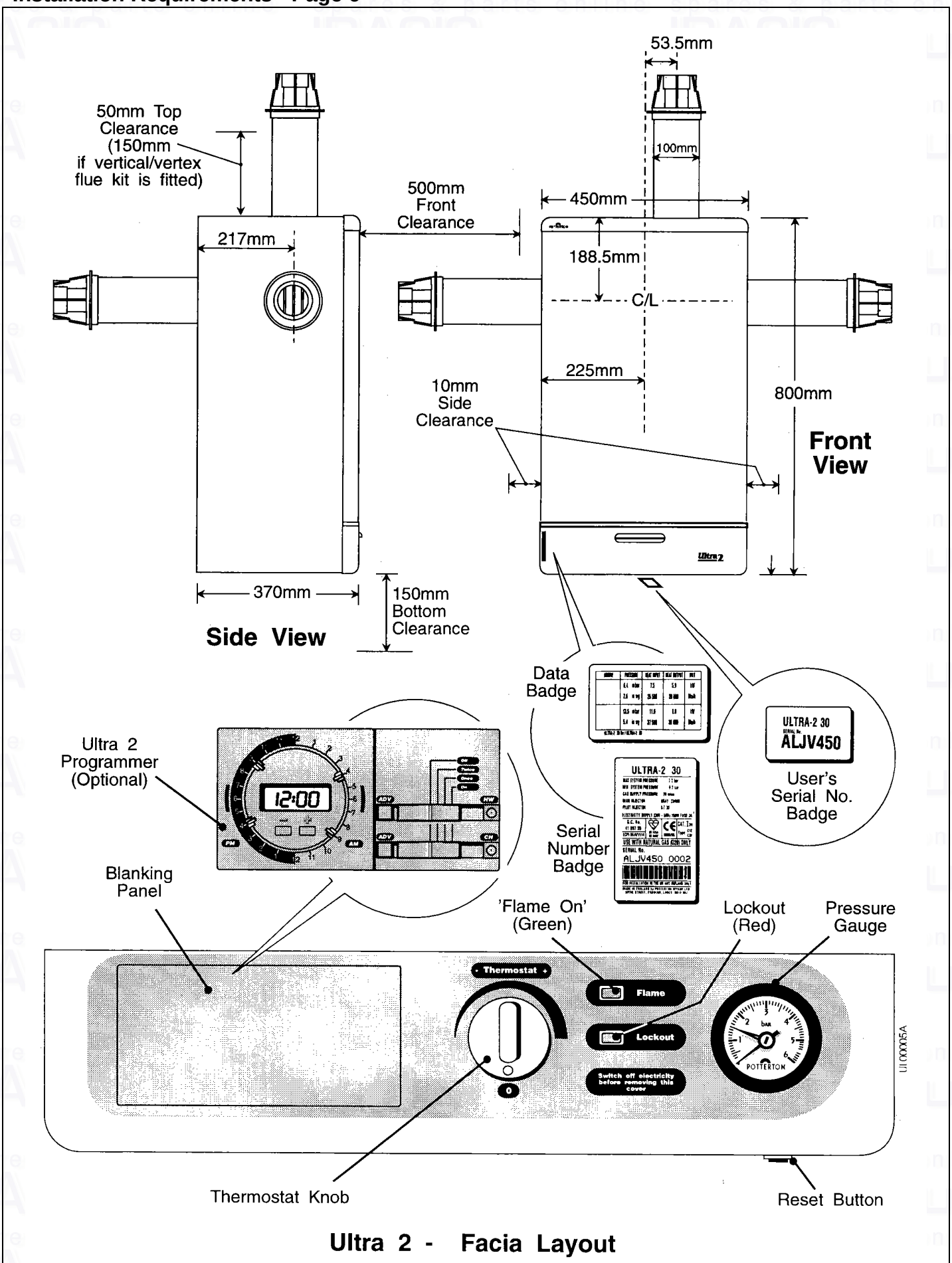


**Ultra 2 - Facia Layout**

Fig 1

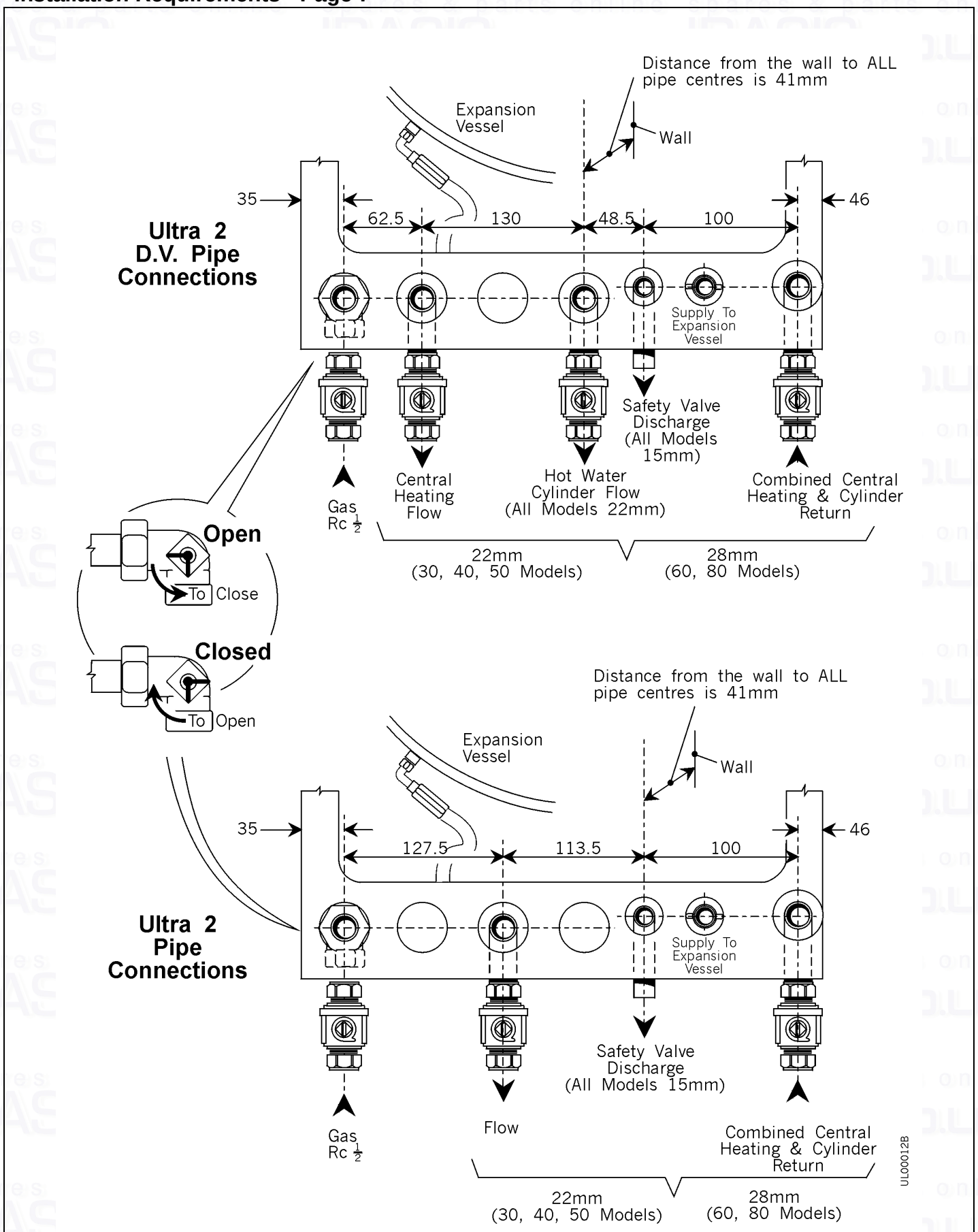
Distance from the wall to ALL pipe centres is 41mm
Expansion Vessel
Wall
35
46
62.5
130
48.5
100
Ultra 2 D.V. Pipe Connections
Supply To Expansion Vessel
Safety Valve Discharge (All Models 15mm)
Gas Rc ½
Central Heating Flow
Hot Water Cylinder Flow (All Models 22mm)
Combined Central Heating & Cylinder Return
22mm (30, 40, 50 Models)
28mm (60, 80 Models)
Open
To Close
Closed
To Open
Distance from the wall to ALL pipe centres is 41mm
Expansion Vessel
Wall
35
46
127.5
113.5
100
Ultra 2 Pipe Connections
Supply To Expansion Vessel
Safety Valve Discharge (All Models 15mm)
Gas Rc ½
Flow
Combined Central Heating & Cylinder Return
22mm (30, 40, 50 Models)
28mm (60, 80 Models)
UL00012B

Fig 2

## 1.6 Air Supply

The room in which the boiler is installed does not require a purpose provided air vent.
If the boiler is installed in a cupboard or compartment, permanent air vents are required in the cupboard or compartment, one at high level and one at low level, either direct to the outside air or to a room. Both high level and low level air vents must communicate with the same room or must be on the same wall to outside air. Both the high level and low level vent must each have a free area as stated below. The free area of each vent may be halved if the ventilation is provided directly from outside.

Models:
30: 110 cm² 40: 140 cm² 50: 180 cm² 60: 210 cm² 80: 264 cm²

If the boiler is installed in a cupboard or compartment with a door, allow at least 50 mm clearance between the front of the boiler and the door for air movement.

## 1.7 Horizontal Flue System

The flue/terminal assembly supplied with the boiler is 600 mm long.
A 1 m flue extension is available, if required.
Under no circumstances should the total flue length exceed 3 m. A 3 m length flue would comprise of the standard flue and three 1m extension kits, one of which would be cut down to 400mm.

## 1.8 Water Connections

Isolation valves are supplied loose with the boiler. See Fig 2.
A short safety valve discharge pipe is provided on the boiler. It must be possible to break the joint and the remainder of the discharge pipe (not provided) should it ever be necessary to remove the boiler from its wall plate.
**Note:** The flow and return connections at the base of the boiler have been temporarily sealed with plastic plugs.
Remove **ALL** plugs before connecting the isolation valves.
Use the pressure gauge connection at the water manifold as the drain point for the boiler.
Fit one or more draining taps (BS2879) to enable the water system to be fully drained.
A factory set by pass is built into the boiler and **MUST NOT** be adjusted.
The pressure relief valve **MUST NOT** be used to drain the boiler.

## 1.9 Sealed System Requirements

1. The installation must comply with the requirements of BS6798 and BS5449. Maximum water temperature is 82°C ± 3°C.
2. A safety valve set to operate at 3 bar and a pressure gauge covering the range 0 to 6 bar are incorporated within the boiler.
3. A 10 litre expansion vessel to BS4841 is fitted and pre-charged to 0.5 bar. The maximum water content is shown in the table below.
4. Water lost from the system shall be replaced from a make-up vessel, and double check valve, mounted higher than the top of the system or manually by a temporary hose connection, remove the temporary hose after use.See Fig 3.
   **Note:** Stop valves must comply with the requirements of BS1010:2.
5. The hot water cylinder shall either be the indirect coil type or a cylinder fitted with an immersion calorifier.
6. The automatic air vent supplied with the boiler **MUST** be fitted in a tee on a horizontal section of pipe at the highest point in the system.

**Expansion Vessel.**

The expansion vessel is charged to 0.5bar. The volume of expansion vessel varies with the overall system volume and the cold fill pressure. The greater the cold fill pressure, the greater the volume of the water stored in the vessel to replace any slight water leaks. At the same time this will reduce the maximum available system volume. The expansion vessel volume is 10 litres. Subtract this from the figures given in the chart opposite, to give the volume of an additional vessel.

| System Volume (Litre) | Cold Fill Pressure (bar) | | |
|---|---|---|---|
| | 0.5 | 0.8 | 1.0 |
| 25 | 1.5 | 2.3 | 2.9 |
| 50 | 3.0 | 4.5 | 5.8 |
| 75 | 4.6 | 6.8 | 8.7 |
| 100 | 6.1 | 9.0 | 11.6 |
| 125 | 7.7 | 11.3 | 14.5 |
| 150 | 9.2 | 13.5 | 17.4 |

This appliance must have an external water circuit open at all times. This is to allow the pump overrun to work after a period of firing. There must also be a minimum volume of water in the central heating circuit at any time that the boiler is firing, to prevent system noise or nuisance lock out. Details depend on the type of system:

i) Mid position valve (whether fitted internally or externally), with no additional valve on the hot water circuit.
BS5449 : 1990 recommends that at least one radiator is open at all times and cannot be shut off or adjusted by the user. A room thermostat is controlled by this radiator.
If this radiator is not provided e.g.. A full T.R.V. System, then an external bypass will be required across the central heating system. The bypass should be at least 1.5m away from the boiler. For 30, 40 & 50 models the bypass should be 15mm pipe connected across the 22mm flow and return pipes. For 60 & 80 models the bypass should be 22mm pipe connected across the 28mm flow and return pipes.

ii) Two port valve on the hot water circuit ( whether combined with a mid position or another two port valve).
In this case the hot water circuit may not be open for the pump overrun. The external bypass should be across the boiler before any valves. The distance from the boiler and diameters are as above.

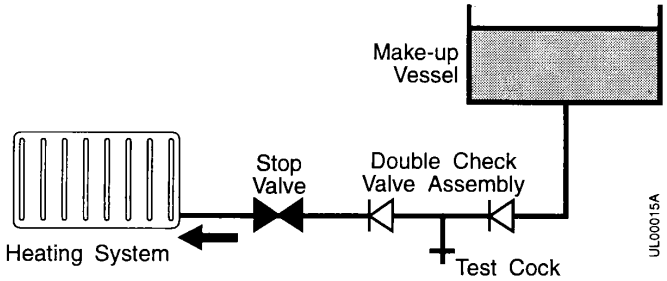


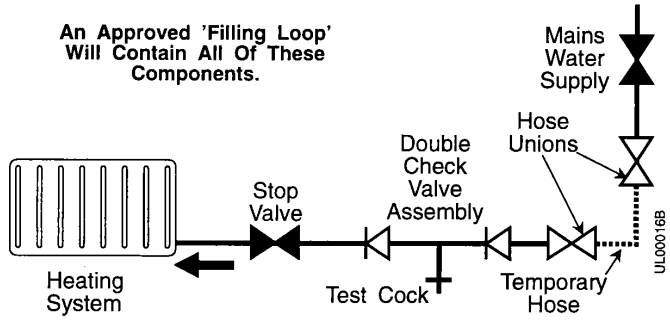


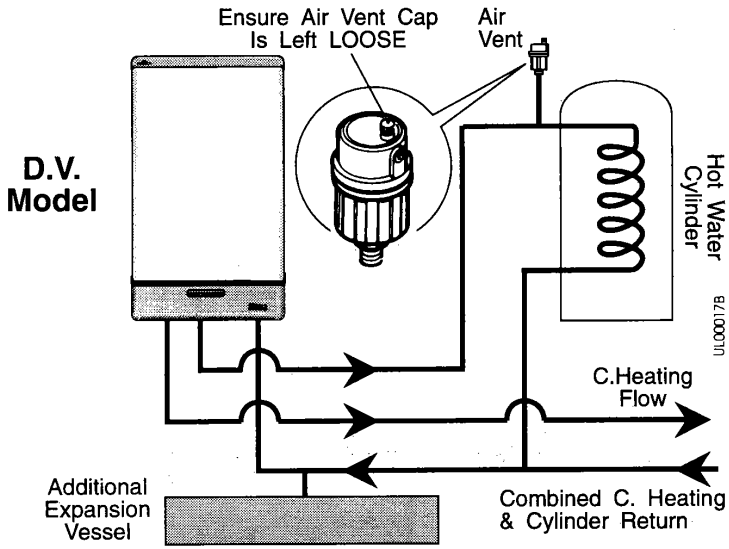


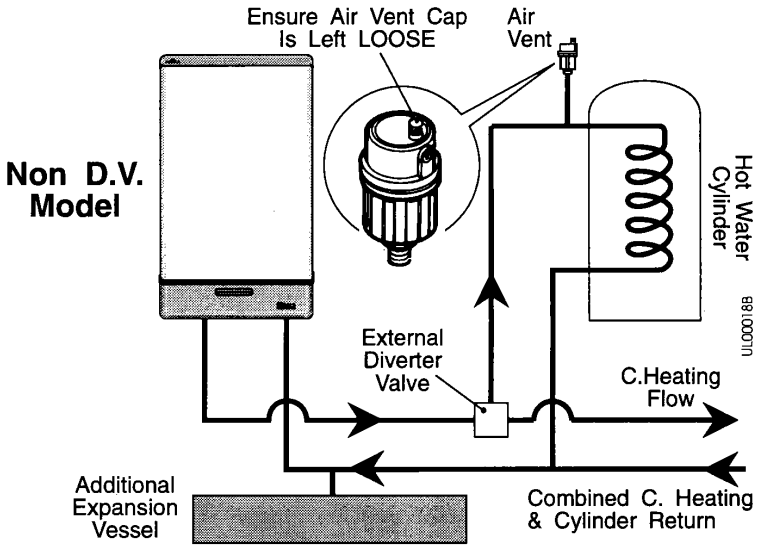


Fig. 3

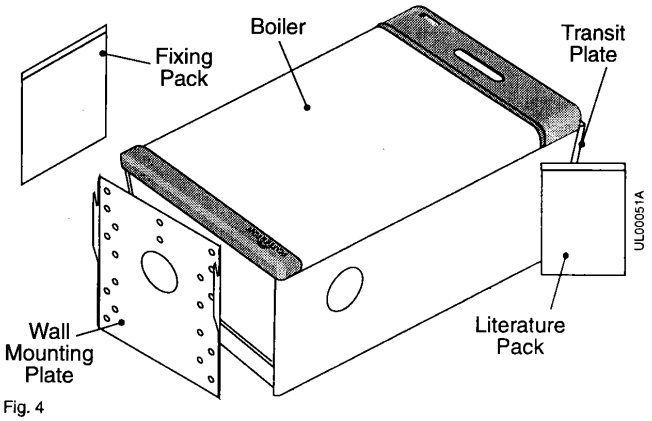

Fig. 4

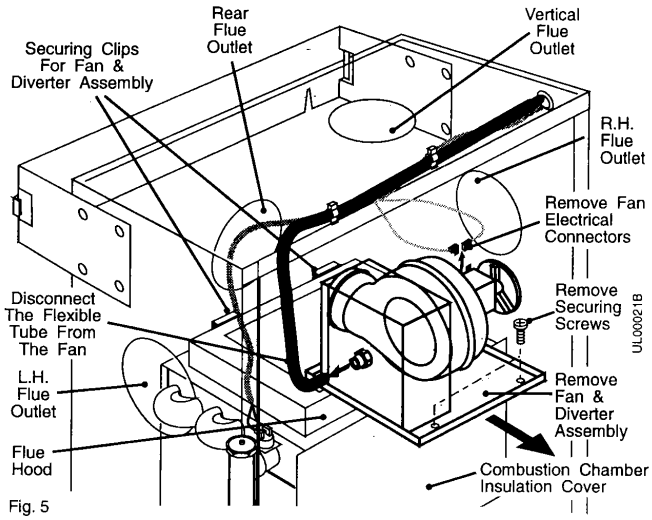

Fig. 5

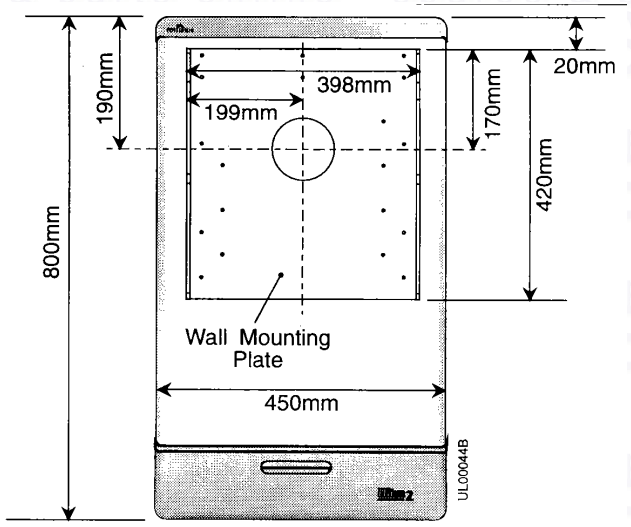

Fig. 6

## 2.1 Unpack & Prepare the Boiler

These instructions assume you have decided on the where the boiler will be located and the type of flue system to be used.

1. Carefully unpack the boiler.
2. Do not discard any packaging until all the items are accounted for.
3. Check that the polythene bag contains the items shown on the check list.

   **Note:** Leave the transit plate secured to the boiler until the boiler is mounted on the wall.

4. Pull down the control cover flap to expose the facia. Pull off the thermostat knob. Remove the 2 screws securing the facia to the side panels and remove the facia/control cover carefully unclipping the two neons as you pull the facia away.

   **Note:** Unplug programmer (if fitted) from back of the control box

5. Pull the bottom of the white front case forward to release the bottom ball studs, continue pulling until the top studs release, then lift slightly and pull away from the boiler.
6. Remove the two white side panels - 2 screws each side.
7. Remove the combustion chamber cover - 4 screws.
8. Disconnect the flexible tube and fan motor wires from the fan assembly.
9. Remove the two screws securing the fan assembly to the flue hood and carefully withdraw the fan.

Go to the applicable option/flue installation section

Wall Spacing Kit - Page 12.

Horizontal Rear Flue - Page 13.

Horizontal Side Flue - Page 15.

Flue Extension - Page 17.

Vertical Flue - Page 18.

Vertex Flue - Page 21.

Horizontal Fit from the Inside Flue - Page 24.

## 2.2 Options Available for Ultra 2

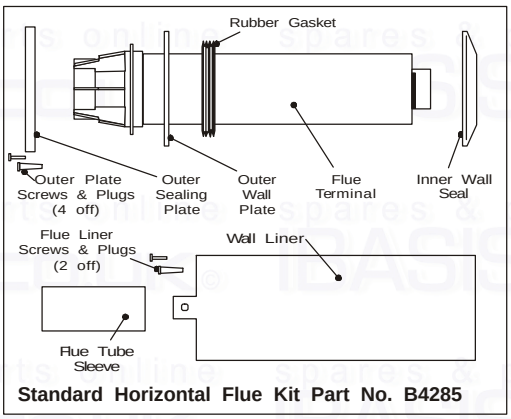


**Standard Horizontal Flue Kit Part No. B4285**

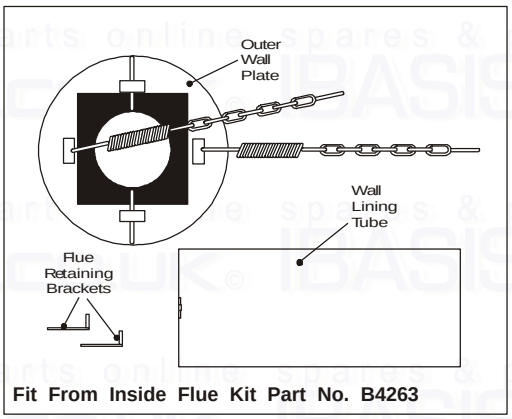


**Fit From Inside Flue Kit Part No. B4263**

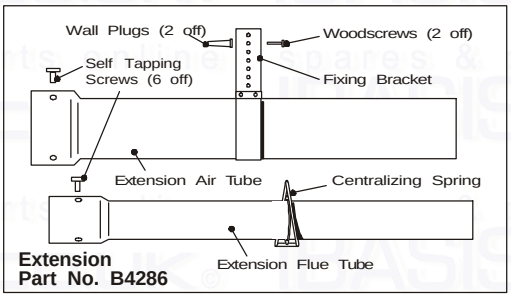


**Extension Part No. B4286**

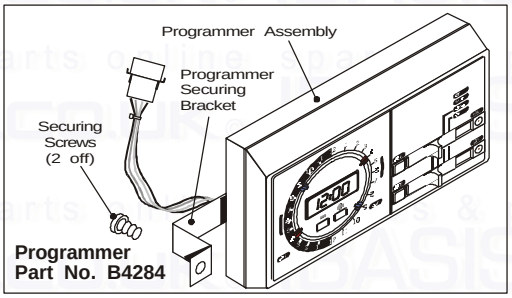


**Programmer Part No. B4284**

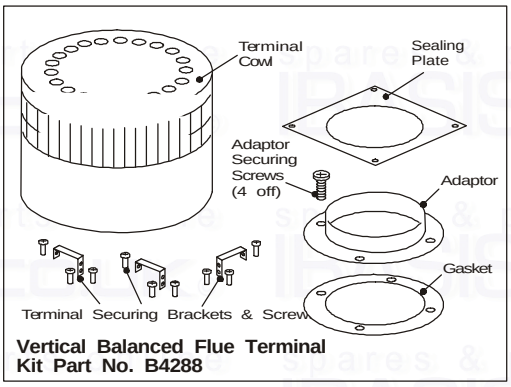


**Vertical Balanced Flue Terminal Kit Part No. B4288**

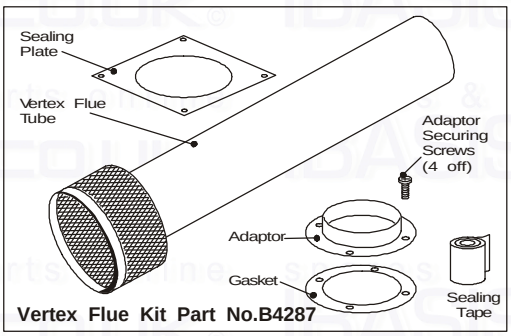


**Vertex Flue Kit Part No.B4287**

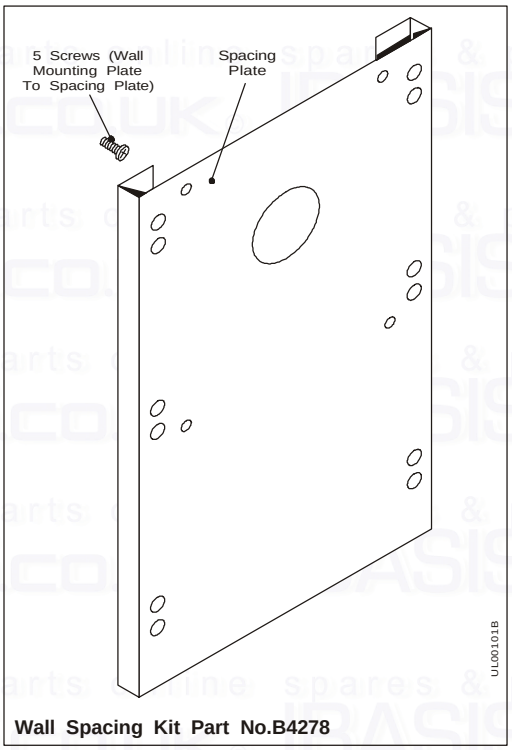


**Wall Spacing Kit Part No.B4278**

Fig. 7

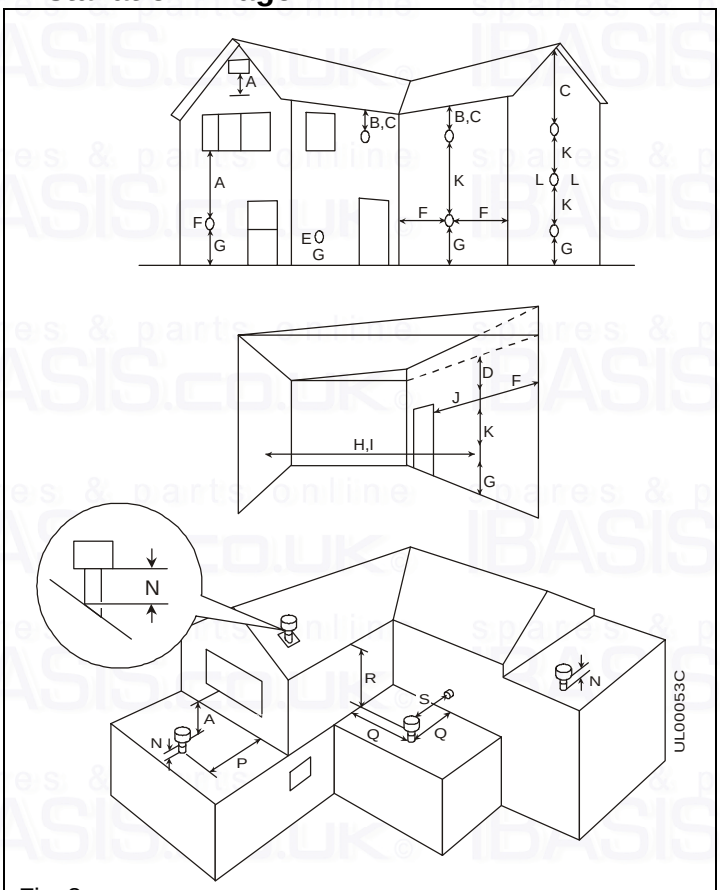


Fig. 8

| Dim. | Terminal Position (Fanned Balanced Flue models) | Min. Spacing |
|---|---|---|
| A | Directly below an opening, air brick, window, etc. | 300 |
| B | Below gutters, soil pipes or drain pipes | 75 * |
| C | Below eaves | 200 * |
| D | Below balconies or car port roofs | 200 |
| E | From a vertical drain pipe or soil pipe | 75 |
| F | From an internal or external corner | 25 |
| G | Above ground, roof or balcony level | 300 ** |
| H | From a surface facing the terminal | 600 |
| I | From a terminal facing the terminal | 1200 |
| J | From an opening in the car port (e.g. door, window) into dwelling | 1200 |
| K | Vertically from a terminal on the same wall | 1500 |
| L | Horizontally from a terminal on the same wall | 300 |
| N | Above roof level (to base of terminal) | 300 |
| P | From adjacent wall to flue | 210 |
| Q | From internal corner to flue | 230 |
| R | Below eaves or balcony | 600 |
| S | From facing terminal | 1200 |

*If the terminal is fitted within 850mm of a plastic or painted gutter/pipe or 450mm of painted eaves, an aluminium shield of at least 750mm in length should be fitted to the underside of the gutter/pipe or painted surface.

** If the terminal is fitted less than 2m above a balcony, above ground or above a flat roof to which people have access, then a suitable terminal guard must be provided and fitted.

A type K1 (G.C. No. 393 552) protective guard is available from Tower Flue Components Ltd. at: Vale Rise, Tonbridge, Kent TN9 1TB, Tel: (01732) 351555. The guard must be securely fitted to the wall and centrally located over the flue terminal. Refer to the manufacturers instructions.

## 2.3 Fit the Optional Wall Spacing Kit

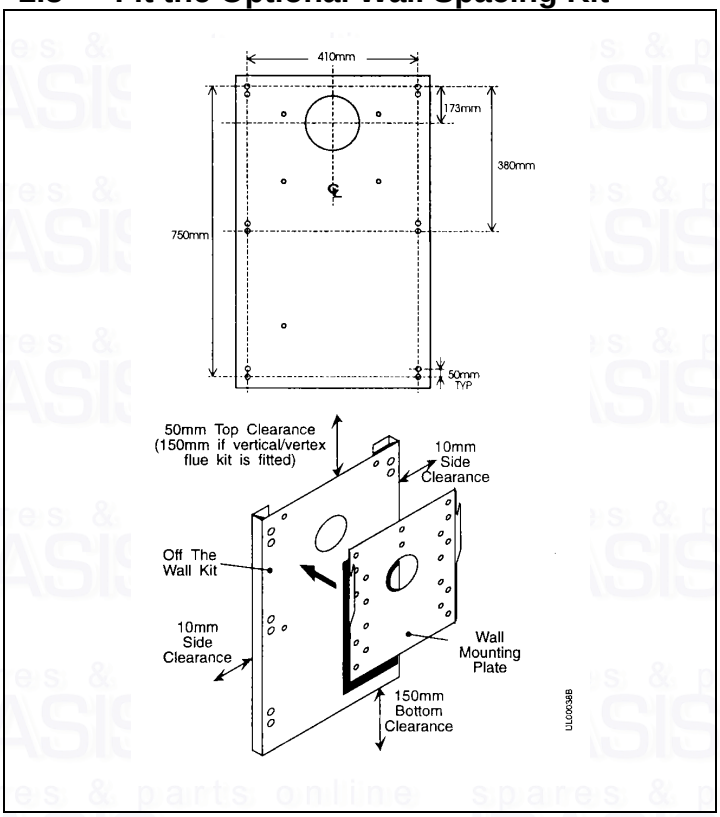


The wall spacing kit allows the boiler to be spaced 40 mm from the wall, providing sufficient room for all pipework to be run behind the boiler.

**Kit Contents**

| Item | Qty |
|---|---|
| Spacing Plate | 1 |
| M6 x 12lg Screw | 5 |

1. Decide upon the position of the boiler using the wall plate supplied with the boiler. Ensure that the wall plate is level and mark the centre lines of the flue opening onto the wall. Using these lines as a guide mark the positions of the six spacing plate fixing holes you will use (12 holes are provided to avoid drilling into mortar). Drill and plug these holes to accept 2½" lg. No.12 woodscrews.
2. If rear exit flue is to be used, cut the hole in the wall before fitting the spacing plate.
3. Secure the spacing plate to the wall with six 2½" lg. No.12 woodscrews (not supplied).Ensure that the spacing plate is level.
4. Secure the wall plate, supplied with the boiler, to the spacing plate with the five screws supplied with this kit.
5. Continue to install the boiler as described in the relevant flue section.

**IMPORTANT**

**As the boiler is now spaced off the wall by 40mm, all dimensions quoted in the flue sections for the position of the flue in relation to the wall must be increased by 40mm.**

## 2.4 Install the Boiler and Rear Flue

1. Having noted the clearances needed for installation (flue terminal & boiler), position the wall mounting plate against the wall (ensure it is level) and mark the position of the flue hole and centre, plus a minimum of four of the mounting holes. Remove the wall mounting plate.

**Important**: Before drilling or cutting the wall ensure there are no water pipes, gas pipes or electric cables.

2. Drill and plug 4 holes (min.) for the wall mounting plate to accept 2½" long woodscrews (not supplied). From the marked flue centre, cut a 127mm diameter hole through the wall, if possible use a 127mm (5") core drill.

3. Measure the wall thickness and cut the wall liner to the same length. Insert the wall liner into the wall, ensure the seam is to the top and that the tabs are horizontal, (no screws are required as the wall liner will be held in place by the wall mounting plate).
   Make good the wall (if required).

4. Attach the wall mounting plate to the wall. Ensure it is level.

5. Lift the boiler into position over the wall plate. The two V shaped cut outs in the top mounting bracket locate behind the two prongs on the wall plate.

6. Choose one of the bottom boiler fixing points, mark the position then drill and plug to accept a 1" woodscrew (not supplied). See Fig.11.

7. Insert a woodscrew (not supplied) into the bottom fixing hole to secure the boiler to the wall.

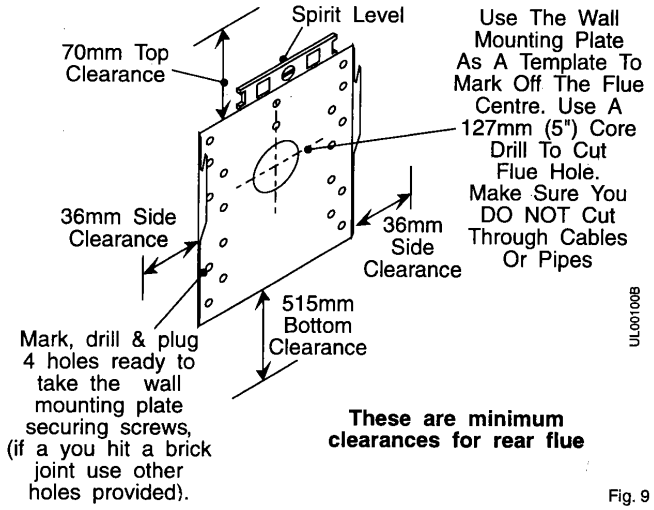


Fig. 9

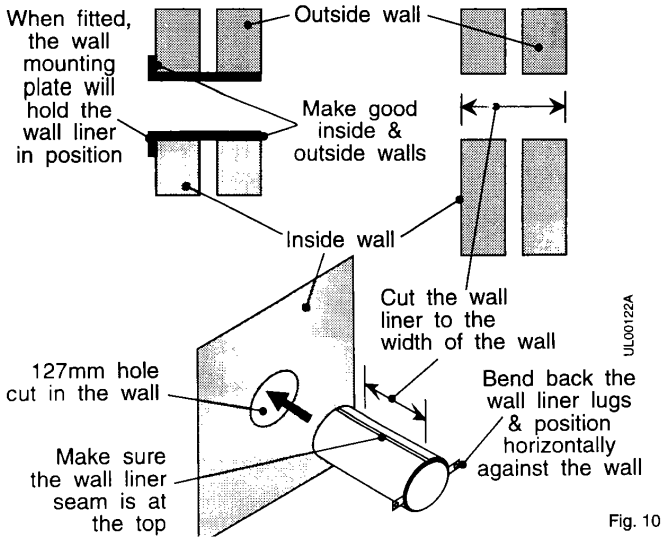


Fig. 10

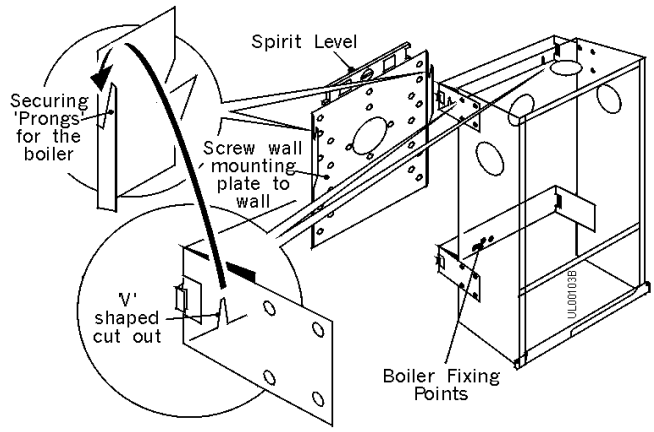


Fig. 11

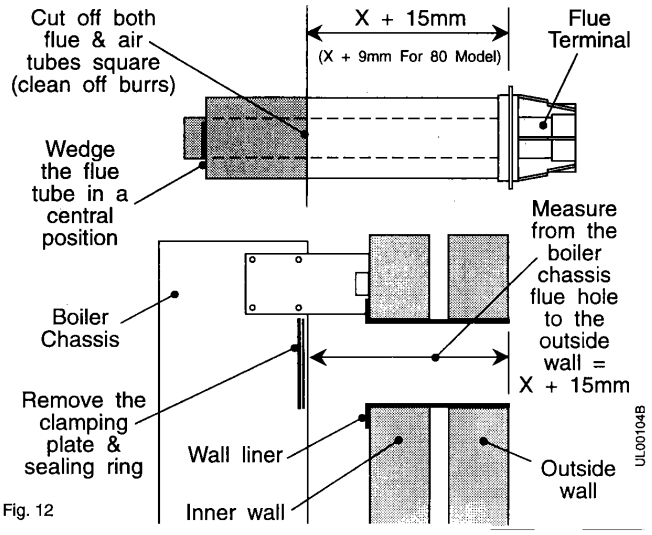

Fig. 12

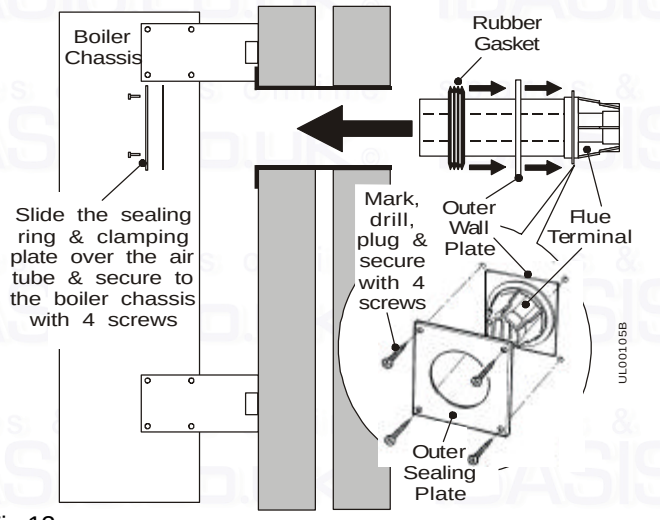

Fig 13

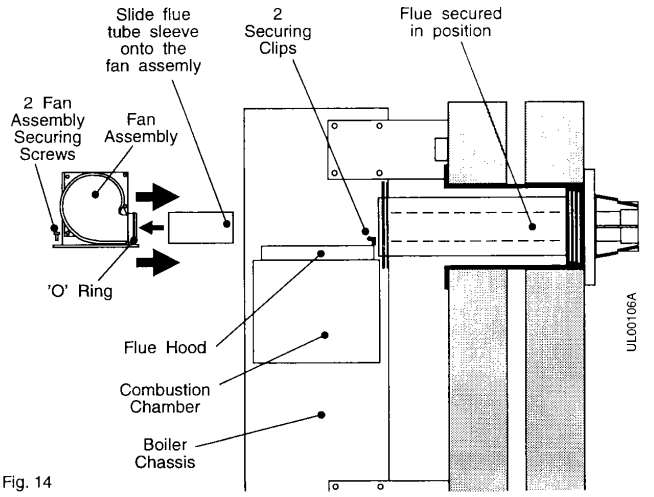

Fig. 14

8. Remove the clamping plate & sealing ring from the rear boiler chassis flue hole, place to one side.
9. Measure the wall thickness from the edge of the outer wall to the flue hole in the boiler chassis. Add 15mm (9mm for 80 model)and mark this distance on the flue from the terminal flange. See Fig. 12.
   Put wedges in the end of the flue to stop the outer flue compressing onto the inner.
   Cut squarely through both the inner and outer tubes. Remove all burrs.
10. Locate the outer wall plate and rubber gasket onto the die cast flue terminal.
    See Fig.13.
11. From the outside, insert the flue through the wall liner and through the wall mounting plate.
12. Ensure that the outer wall plate is flush with the wall.
13. Position the outer sealing plate, mark the four mounting holes and remove.

**Note:** Cover the terminal before drilling to prevent debris entering the terminal.

14. Drill and plug the holes to accept No. 8 x 1" woodscrews, remove the covering from the terminal, re-position the outer sealing plate and secure to the wall.
15. Slide the sealing ring and clamping plate over the flue and push up to the boiler chassis. Secure using the four screws previously removed. See Fig.13.
16. Ensure that the 'O' ring is in position on the fan outlet, then fit the flue tube sleeve, over the fan outlet and push it fully home.
17. Place the fan assembly on top of the flue hood with the outlet facing to the rear and reconnect the two fan motor leads (polarity not important) and the air pressure switch tube.
18. With the fan assembly resting on the flue hood push it towards the rear of the boiler, locate the flue tube sleeve on the fan outlet into the inner tube of the flue/terminal assembly and push the fan assembly fully home until the base is located under the returns at the rear of the flue hood.
19. Secure the front of the fan assembly to the flue hood with the two screws previously removed.
20. Remove the four screws securing the transit plate to the bottom of the boiler, discard the plate and screws.
21. Remove the screw and unhook the base plate - DO NOT discard these items.

22. **Proceed to Section 2.10**.

IBASIS.CO.UK spares & parts online

## 2.5 Install the Boiler and Side Flue

1. Having noted the clearances needed for installation (flue terminal & boiler), position the wall mounting plate against the wall (ensure it is level) and mark the position of the flue hole and centre, plus a minimum of four of the mounting holes. Remove the wall mounting plate.

**Important:** Before drilling or cutting the wall ensure there are no water pipes, gas pipes or electric cables.

2. Drill and plug 4 holes (min.) for the wall mounting plate to accept 2½" long woodscrews.
3. Attach the wall mounting plate. Ensure it is level.
4. From the centre of the flue hole on the wall mounting plate draw a level horizontal line along the wall to the corner, continue the horizontal line along the side wall and mark the position of the flue hole as shown. See Fig.15.
5. From the marked flue centre, cut a 127mm diameter hole through the wall, if possible use a 127mm (5") core drill.
6 .Measure the wall thickness and cut the wall liner to the same length. See Fig.16 Bend back the wall liner lugs (90°).
   From the inside insert the wall liner into the wall, ensure the seam is to the top and that the tabs are horizontal, mark, drill, plug & screw the wall liner into position.
   Make good the wall (if required).
7. Remove the four screws and clamping plate & sealing ring from the rear of the boiler chassis. Remove the blanking plate from the side of the chassis & fit to the rear flue opening.
   Lift the boiler into position over the wall plate. The two V shaped cut outs in the top mounting bracket locate behind the two prongs on the wall plate.
   **Note:** If the measurement taken in paragraph 8 below is less than 600mm carry on with the installation, if greater than 600mm go to Section 2.5.
8. Measure the wall thickness from the edge of the outer wall to the flue hole in the boiler chassis. Add 15mm and mark this distance on the flue from the terminal flange.
9. Put wedges in the end of the flue to stop the outer flue compressing onto the inner. Cut squarely through both the inner and outer tubes. Remove all burrs.
10. Choose on of the bottom boiler fixing points. Mark the position then drill and plug to accept a 1" woodscrew (not supplied). Insert a screw into the bottom fixing hole & secure the boiler.

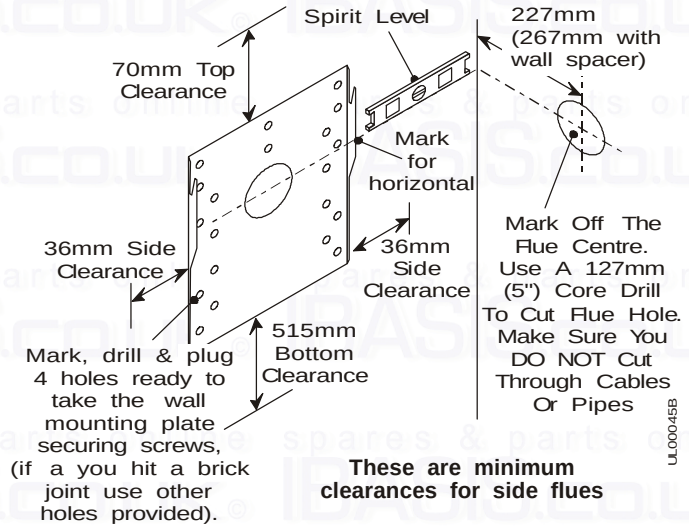


Fig 15

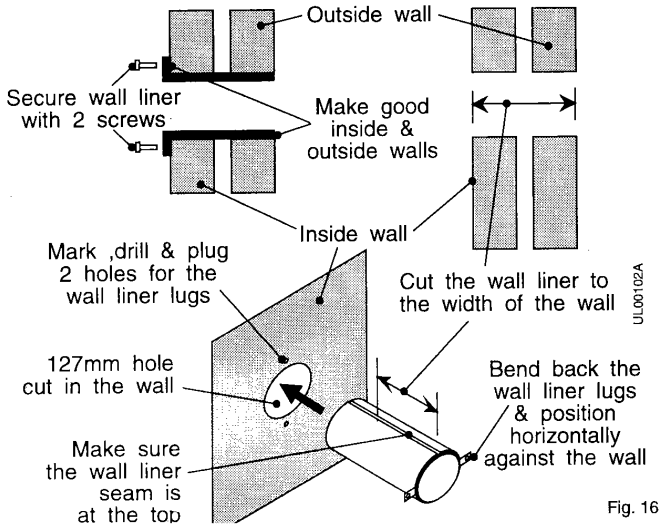


Fig. 16

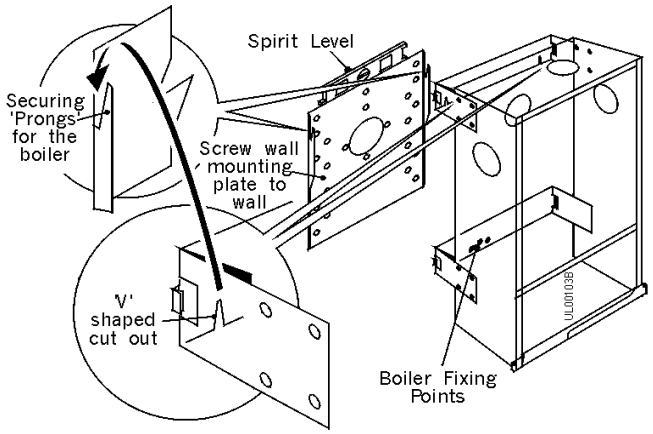


Fig 17

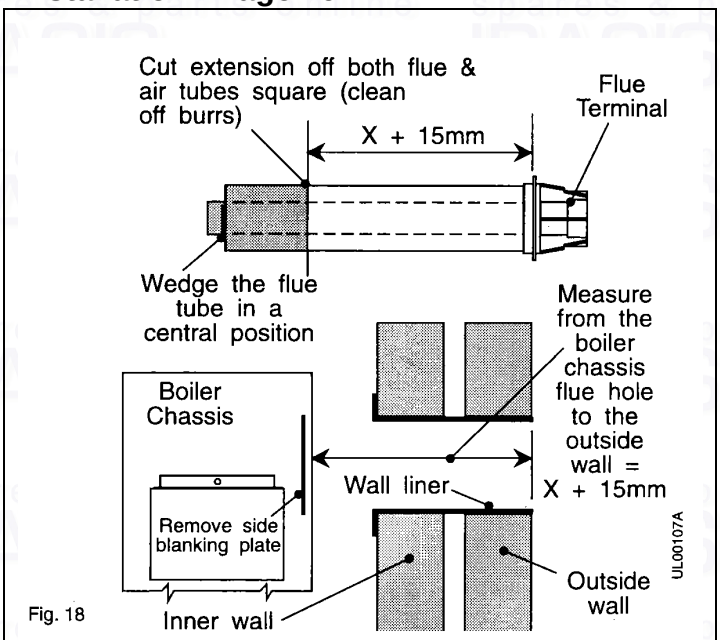


Fig. 18

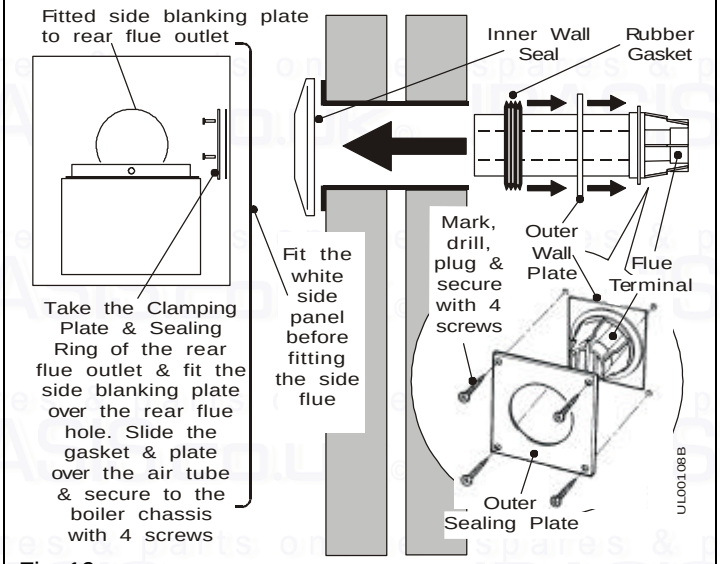


Fig. 19

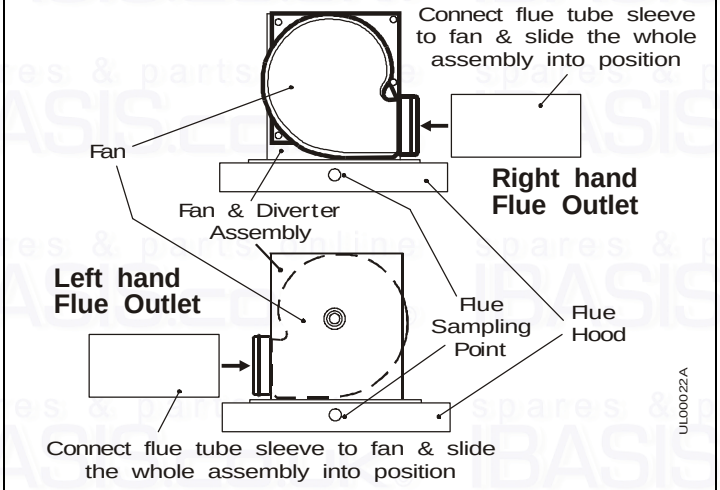


Fig 20

11. Remove the cover plate from the white case side and attach the panel to the boiler.

12. Locate the outer wall plate and rubber gasket onto the die cast flue terminal.

13. From the outside, insert the flue through the hole in the wall.
From the inside slide the inner wall seal over the flue assembly.

14. Ensure that the terminal is flush with the outside wall and that the rubber gasket is in the wall liner (sealing off the wall liner from the outside).

15. Position the outer sealing plate, over the flue terminal, mark the four mounting holes on the outside wall and remove.

**Note:** Cover the terminal before drilling to prevent debris entering the terminal.

16. Drill and plug the holes to accept No. 8 x 1" woodscrews, remove the covering from the terminal, re-position the outer sealing plate and secure to the wall.

17. Slide the sealing ring and clamping plate over the flue and push up to the boiler chassis. Secure using the four screws previously removed. See Fig 19.

18. Ensure that the 'O' ring is in position on the fan outlet, then fit the flue tube sleeve, over the fan outlet and push it fully home.

19. Place the fan assembly on top of the flue hood with the outlet facing to the side and connect the flue together. Reconnect the two fan motor leads (polarity not important) and the air pressure switch tube.

20. With the fan assembly clipped on at the back of the flue hood.Secure the front of the fan assembly to the flue hood with the two screws previously removed.

21. Check that the flue tube sleeve is fully connected to the fan assembly & flue.

22. Remove the four screws securing the transit plate to the bottom of the boiler, discard the plate and screws.

23. Remove the screw and unhook the base plate - DO NOT discard these items.

24. **Proceed to Section 2.10.**

## 2.6 Flue Extension

The total length must not exceed 3 m.

If the length of the flue/terminal assembly is to be more than 600 mm, one, two or three flue extensions will have to be used as follows:

1. Carefully unpack the flue extension.
   Supplied with the extension tube are six No.8 x 10 lg. screws and a small roll of sealing tape.
2. Locate the flared end of the extension over the open end of the flue/terminal assembly. Ensure that the inner flue tubes are engaged. If the length of the flue/terminal assembly is to be more than 1600 mm fit another flue extension to the one just fitted in the same way. Similarly if the assembly is to more than 2600 mm fit another flue extension.
3. Mark the final extension (extension that will connect to the boiler) to the required length, measure from the back of the terminal flange. See Fig.21.
4. Cut the last tube squarely to the correct length (the one that will fit to the boiler) and remove all burrs.
5. Install the flue assembly in the wall, See Fig.21 & slide the support brackets on the extension & connect up to the flue assembly. Using the pilot holes in the flared end of the extension, drill three 2.8 mm dia. holes into the outer tube of the flue/terminal assembly. Take care not to damage the inner flue tube with the drill.
   Secure the extension to the flue/terminal assembly using the three screws supplied with the extension. Seal the joint with the tape supplied with the extension. Bend the end of the support bracket/s so it joins a wall or ceiling member & secure with two screws/plugs provided.
6. Return to the section you were at before this one and carry on with the installation.

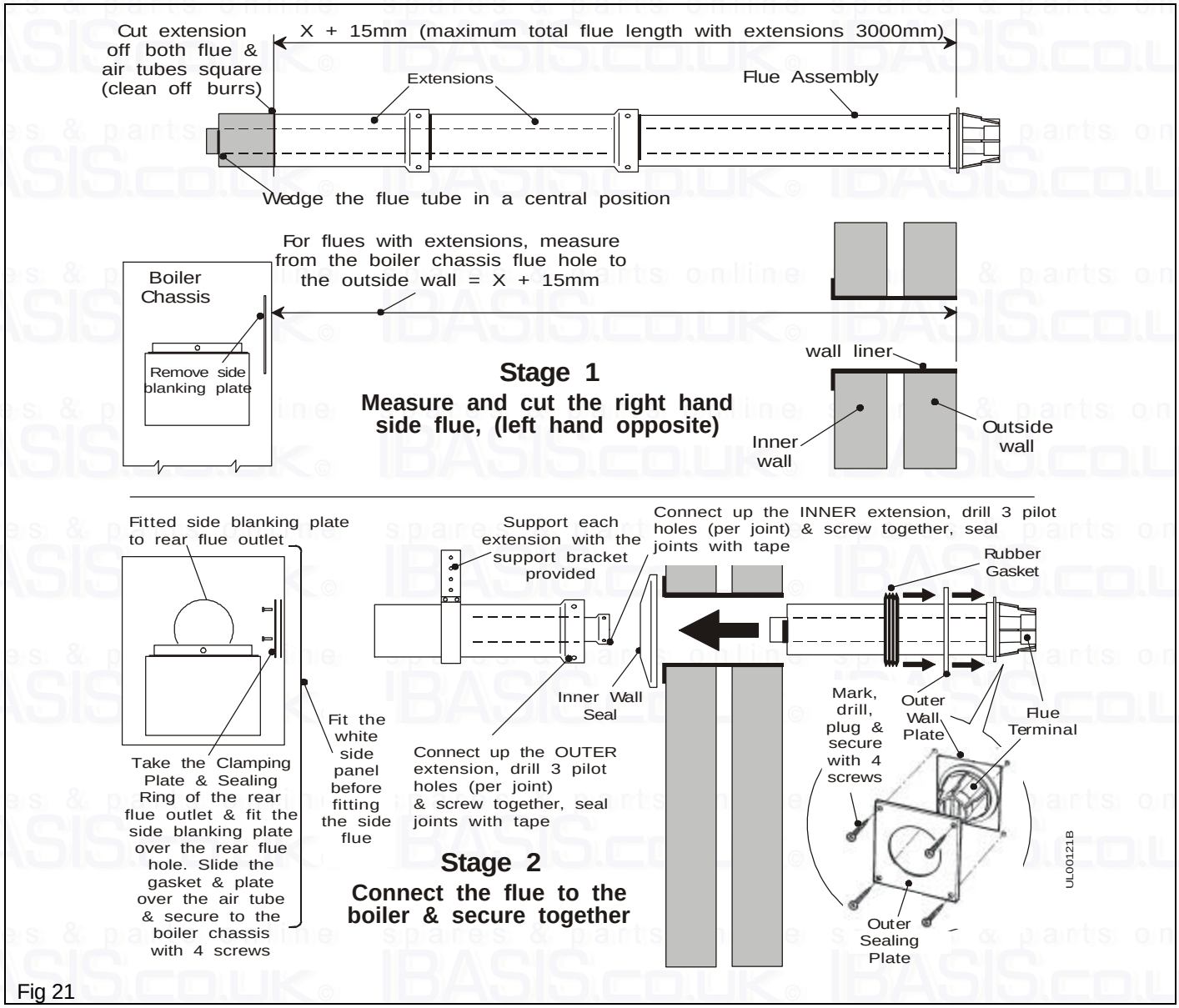


Fig 21

## 2.7 Fit the Optional Vertical Balanced Flue

This Vertical Balanced Flue kit is only for use with the Ultra 2 Boiler and allows the flue to run vertically from the boiler, terminating above either a flat or pitched roof.

The kit must be used with at least ONE, and up to THREE 1 metre flue extension kits, in conjunction with the horizontal standard flue kit. The minimum flue length is 1.2 metres and the maximum permissible flue length is 3.25 metres.

To render the installation weatherproof, a storm collar and an adjustable flashing are recommended. The size of these components should be to suit a 3 in. Twin Wall B vent flue system from:

Rite Vent
Armstrong Industrial Estate
Washington
Tyne & Wear. NE37 1LH
Tel: 0191 416 1150
Storm Collar - Ref. 156 Adjustable Flashing - Ref. 151

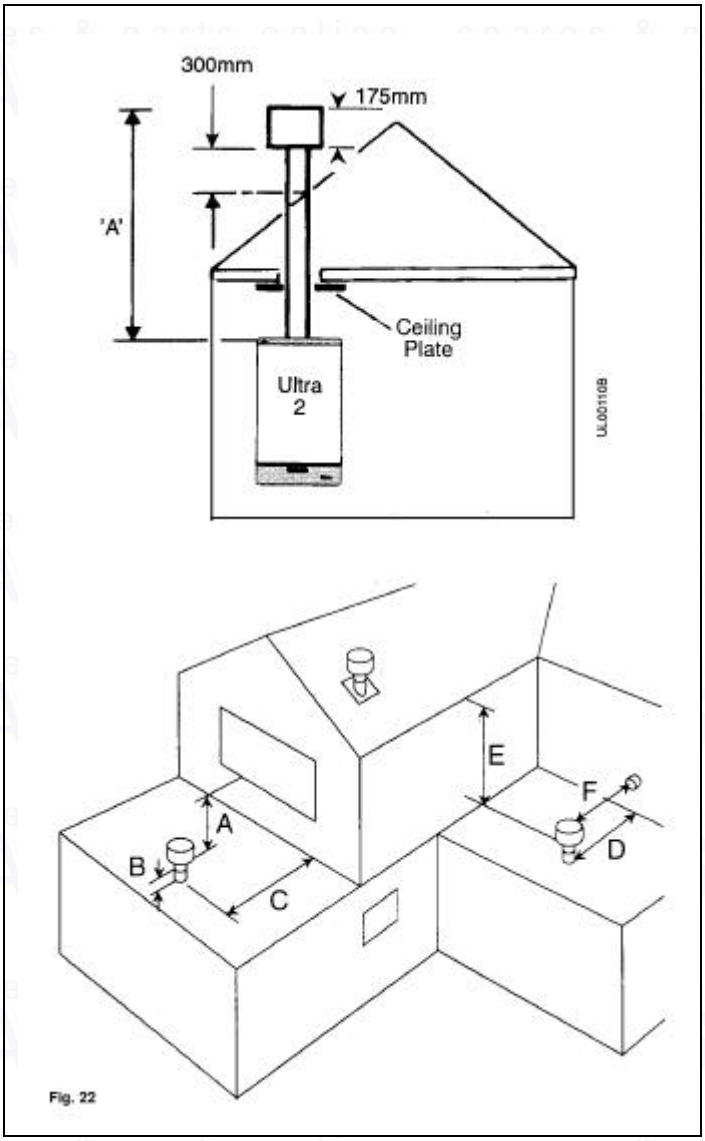

Fig. 22

Minimum Flue length (dimension A) 1.2m

| Length of Vertical Flue (dimension A) | |
|---|---|
| Standard flue | 750mm |
| One flue extension | 1750mm |
| Two flue extensions | 2750mm |
| Three flue extensions | 3250mm |

| Terminal Position | Min Distance |
|---|---|
| A Directly below an openable window or other opening e.g. air brick | 300 mm |
| B Above roof level | 300 mm |
| C From adjacent wall | 210 mm |
| D From internal corner | 230 mm |
| E Below eaves or balcony | 600 mm |
| F From facing terminal | 1200 mm |

**Kit Contents**

| **Description** | **Qty** |
|---|---|
| Flue Terminal Cowl | 1 |
| Vertical flue adaptor ring | 1 |
| Sealing plate | 1 |
| Gasket | 1 |
| M4 x 16 lg. hex. hd. screw | 4 |
| Support brackets | 3 |
| No.8 x 10 lg. pozi hd. screw | 12 |
| Ceiling template | 1 |

1. Carefully unpack the kit, do not discard the packaging until all the items are found. The sealing ring and clamping plate supplied with the boiler are not required when the Vertical Balanced Flue kit is used and should be discarded.
2. Having noted the clearances needed for installation (flue terminal & boiler), position the wall plate against the wall (ensure it is level) and mark the position of the flue hole and a minimum of four of the mounting holes. Remove the wall plate.
   **Important:** Before cutting through the ceiling ensure there are no water pipes, gas pipes or electric cables.
3. Drill and plug the wall to accept 2½" long woodscrews (not supplied).
4. Attach the wall plate to the wall. Ensure it is level.
   A line is marked at the top of the mounting plate which indicates the centre line of the Vertical Balanced Flue. Continue this line vertically upwards to the ceiling. This line must not be closer than 75 mm to any ceiling joist, this will ensure there is adequate clearance for fitting and spacing from combustible material (BS5440:1:1990). Check that the flue will terminate in accordance with the relevant recommendations given in BS5440:1.
5. Tape the ceiling template to the ceiling with the appropriate edge (indicated on the template) against the wall, and the line drawn vertically downwards, indicating the flue centre line, lined up with the template centre line.
6. Mark the position of the four sealing plate fixing holes and the 134 mm diameter hole on the ceiling. Remove the template and drill and plug the four fixing holes to accept 1 in long No.8 woodscrews (not supplied). Cut the 134 mm diameter hole in the ceiling as neatly as possible.
7. Lift the boiler into position over the wall plate. The two V shaped cut outs in the top mounting bracket locate behind the two prongs on the wall plate.
8. Choose on of the bottom fixing points, mark the position then drill and plug to accept a 1" woodscrew (not supplied).
9. Measure from the top of the boiler to the proposed terminal position to obtain dimension ‘A’ - See Fig. 22. The bottom of the flue terminal cowl MUST be at least 300 mm above the inter-section of the roof and flue, this will ensure adequate clearances for the safe operation of the boiler. From dimension ‘A’, determine the number of flue extensions required, if any, and cut the flue tubes to the required length. Ensure that the tubes are cut square. Remove all burrs.
10. Fit the flue terminal cowl over the end of the flue terminal die-casting and secure the three support brackets to the bottom of the cowl. Position the cowl such that it’s bottom edge extends 30 mm past the rear edge of the terminal die-casting and that the separator plate locates over the end of the terminal die-casting. Drill through the six holes in the support brackets, using a 2.8mm diameter drill, taking care not to damage the inner flue tube with the drill. To assist with the installation it is advisable to remove the flue terminal cowl assembly.
11. If a flue extension is to be used, secure and seal to the flue system as follows:- Separate the inner and outer flue extensions, locate the flared end of the inner extension over the open end of the flue system supplied with the boiler. Drill through the pilot holes, in the flared end of the extension after the extension has been fitted - use a 2.8 mm diameter drill. **Note:** Prior to securing the extension(s) to the flue, the storm collar and adjustable flashing must be loosely assembled to the upper flue. Secure the extension to the flue using the three screws supplied with the flue extension. Seal the joint with the tape supplied with the flue extension. Repeat the procedure for the outer flue extension - take care not to damage the inner flue extension when drilling through the outer.
12. Locate the adaptor ring, supplied with the kit, onto the boiler connection of the flue system and drill through the three holes using a 2.8 mm diameter drill, taking care not to damage the inner flue tube with the drill.

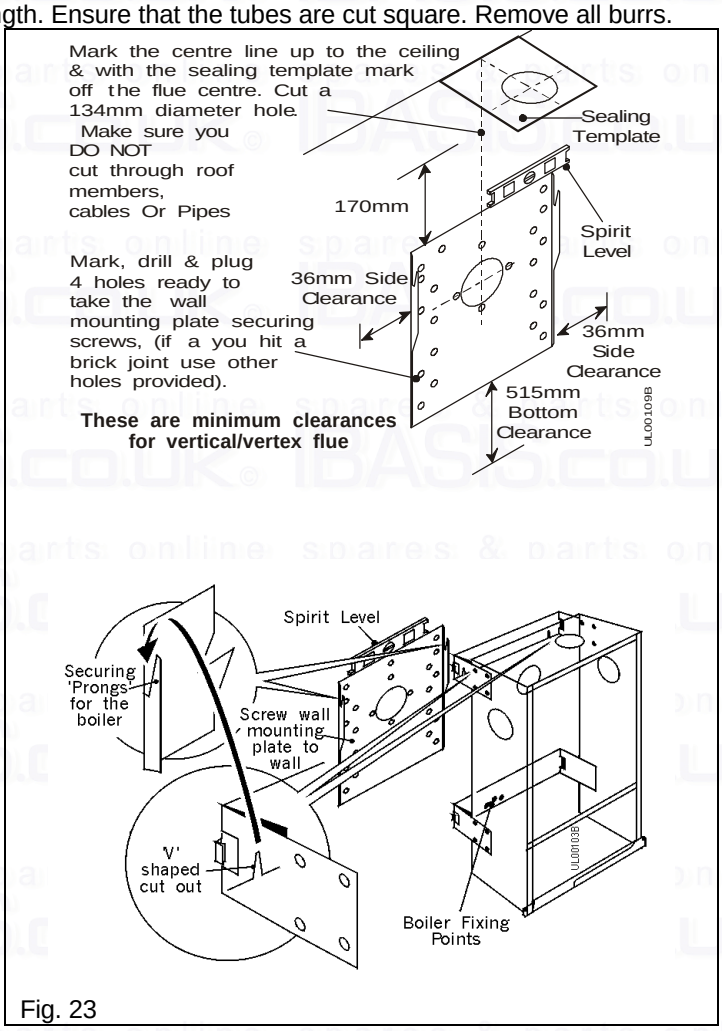

Fig. 23

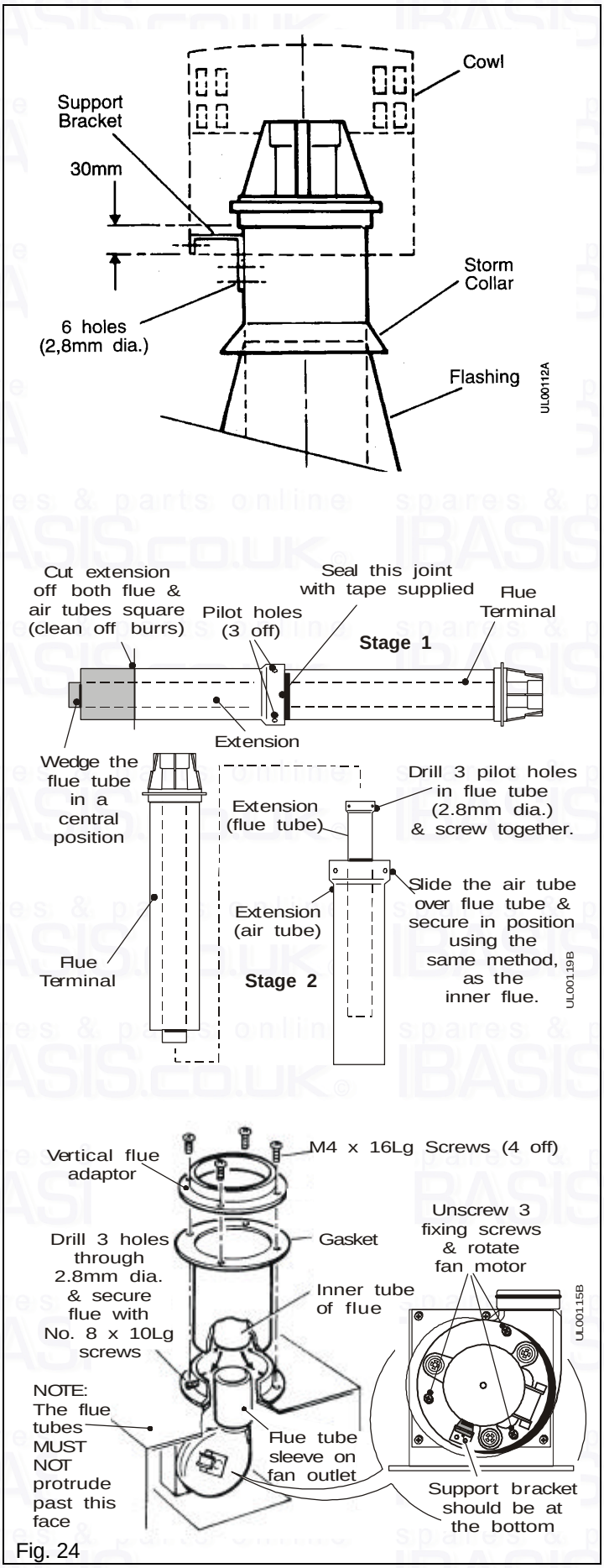

Fig. 24

Retain the adaptor for connection of the flue system to the boiler.

13. The Vertical Balanced Flue MUST be installed from the roof !
Carefully lower the flue assembly, complete with collar and flashing, down through the previously prepared holes in the roof, internal ceilings and floors. Secure the sealing plate in position with four 1 in long No.8 woodscrews, not supplied. Temporarily support the flue clear of the boiler position and proceed to fit the boiler.
14. Lift the boiler into position over the wall plate. The two V shaped cut outs in the top mounting bracket locate behind the two prongs on the wall plate. Take care not to damage the flue.
15. Insert a woodscrew (not supplied) into the bottom fixing hole to secure the boiler to the wall.
16. Remove the sealing ring and clamping plate from the rear of the chassis, remove the sealing plate and four fixing screws from the top of the chassis and fit this to the rear of the chassis.
17. Remove the four screws securing the fan to the flue diverter, rotate the fan so that the outlet is facing upwards and secure it to the diverter with the four screws previously removed. Remove the 3 screws securing the fan motor to the fan assembly. Rotate the motor so that the motor support is again positioned at the underside of the fan.
18. Replace the fan assembly on top of the flue hood. Reconnect the fan motor leads (polarity not important) and air pressure switch tube.
19. With the fan assembly resting on the flue hood push it to towards the rear of the boiler locating the base under the returns at the rear of the flue hood. Secure the front of the fan assembly to the flue hood with the two screws previously removed.
20. Position the gasket and vertical flue adaptor in position on top of the chassis and secure in place with four M4 x 16 mm long hex. head screws - all supplied with the Vertical Balanced Flue kit.
21. Pass the flue tube sleeve down through the adaptor and over the fan outlet and push fully home.
22. Lower the flue system down into the adaptor, ensuring that the inner tube of the flue locates over the flue tube sleeve on the fan outlet. Secure the flue to the adaptor using the three No.8 x 10 mm long screws, supplied with the kit, into the three pilot holes previously drilled.
23. Having secured the flue system to the boiler, proceed to make good the roof joint and refit the flue terminal cowl to the terminal die-casting. Secure the assembly using nine No.8 x 12 mm long screws supplied with the kit.
24. **Proceed to Section 2.10**

## 2.8 Fit the Optional Vertex Flue

This Vertex Flue kit is only for use with the Ultra 2 Boiler and allows the flue to be run vertically from the boiler. The kit may be used as supplied or with one, two or three flue extension kits.

It is important that the roof space is ventilated direct to the outside with a permanent vent. The minimum effective area of the vent is given in the table opposite.

| Boiler models | Minimum air vent area |
|---|---|
| 30 | 198 $cm^2$ |
| 40 | 265 $cm^2$ |
| 50 | 330 $cm^2$ |
| 60 | 428 $cm^2$ |
| 80 | 527 $cm^2$ |

The table opposite gives the maximum lengths of the secondary flue which may be connected to the Vertex Flue.

**Note:** The minimum length of the secondary flue is 0.5 m.

| Boiler models | Max. secondary flue length at Min. boiler input | Max. secondary flue length at Max. boiler input |
|---|---|---|
| 30 | 2m | 5m |
| 40 | 5m | 5.5m |
| 50 | 5.5m | 6m |
| 60 | 8m | 10m |
| 80 | 10m | 12m |

Carefully unpack the kit, do not discard the packaging until all the items are found.

| Description | Qty |
|---|---|
| Vertex Flue | 1 |
| Vertical flue adaptor | 1 |
| Sealing plate | 1 |
| Gasket | 1 |
| M4 x 16 lg. hex. hd. screw | 4 |
| No.10 x 25 lg. pozi hd. screw | 3 |
| No.8 x 10 lg. pozi hd. screw | 3 |
| Ceiling template | 1 |

1. Carefully unpack the kit, do not discard the packaging until all the items are found. The sealing ring and clamping plate supplied with the boiler are not required when the Vertex Flue kit is used and should be discarded.
2. Having noted the clearances needed for installation (flue terminal & boiler), position the wall plate against the wall (ensure it is level) and mark the position of the flue hole and a minimum of four of the mounting holes. Remove the wall plate.
   **Important:** Before cutting through the ceiling ensure there are no water pipes, gas pipes or electric cables.
3. Drill and plug the wall to accept 2½" long woodscrews (not supplied).
4. Attach the wall plate to the wall. Ensure it is level.
   A line is marked at the top of the mounting plate which indicates the centre line of the Vertex Flue. Continue this line vertically upwards to the ceiling. This line must not be closer than 75 mm to any ceiling joist, this will ensure there is adequate clearance for fitting and spacing from combustible material (BS5440:1:1990, sub-clause 3.3 and 4.25). Check that the flue will terminate in accordance with the relevant recommendations given in BS5440:1. The flue must be fitted with a terminal of a type which has been tested and found satisfactory by British Gas.
5. Tape the ceiling template to the ceiling with the appropriate edge (indicated on the template) against the wall, and the line drawn vertically downwards, indicating the flue centre line, lined up with the template centre line.
6. Mark the position of the four sealing plate fixing holes and the 134 mm diameter hole on the ceiling. Remove the template and drill and plug the four fixing holes to accept 1 in long No.8 woodscrews (not supplied). Cut the 134 mm diameter hole in the ceiling as neatly as possible.
7. The Vertex Flue supplied is 1170 mm long. Up to three flue extensions may be used, which will give a vertex flue length from 1170 to 4170 mm. The top of the air inlet mesh on the flue must be at least 400 mm above the roof joists, this will ensure adequate clearance above any insulation materials.
8. If the distance from the top raised edge of the wall mounting plate to the top of the roof joists is more than 750 mm at least one flue extension **must** be used with the Vertex Flue.
9. Fit the sealing plate over the flue (before any flue extensions are fitted).

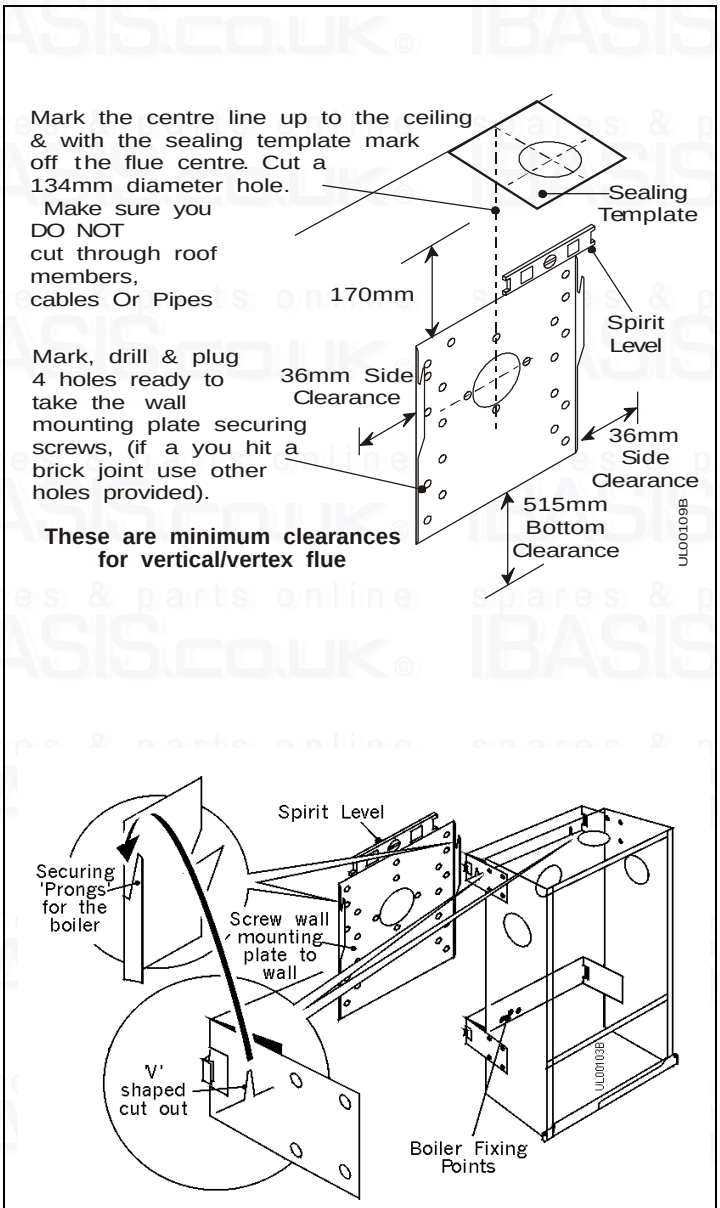


Fig. 25

10. If a flue extension is to be used, secure and seal this to the bottom half of the Vertex Flue as follows:-
    Locate the flared end of the extension over the open end of the Vertex Flue. Ensure that the inner flue tubes are engaged.
    Rotate the tube until the three fixing holes line up, then secure the tubes together using the three screws supplied with the flue extension. Seal the joint with the tape supplied with the flue extension.
    If another one or two extensions are to be fitted, you will have to drill through the pilot holes, in the flared end of the extension after the extension has been fitted - use a 2.8 mm diameter drill, taking care not to damage the inner flue tube with the drill. Secure the extension using the three screws supplied with the flue extension. Seal the joint with the tape supplied with the flue extension.
11. Pass the Vertex Flue assembly (mesh first) up through the hole into the roof space. Secure the sealing plate in position with four 1 in long No.8 woodscrews, not supplied. Temporarily support the flue.
12. Remove the sealing ring and clamping plate from the rear of the chassis, remove the sealing plate and four fixing screws from the top of the chassis and fit this to the rear of the chassis.
13. Lift the boiler into position over the wall plate. The two V shaped cut outs in the top mounting bracket locate behind the two prongs on the wall plate. Take care not to damage the flue.
14. Insert a woodscrew (not supplied) into the bottom fixing hole to secure the boiler to the wall.
15. Remove the four screws securing the fan to the flue diverter, rotate the fan so that the outlet is facing upwards and secure it to the diverter with the four screws previously removed. Remove the 3 screws securing the fan motor to the fan assembly. Rotate the motor so that the motor support is again positioned at the underside of the fan.
16. Replace the fan assembly on top of the flue hood. Reconnect the fan motor leads (polarity not important) and air pressure switch tube.
17. With the fan assembly resting on the fluehood push it to towards the rear of the boiler locating the base under the returns at the rear of the flue hood. Secure the front of the fan assembly to the flue hood with the two screws previously removed.
18. Position the gasket and vertical flue adaptor in position on top of the chassis and secure in place with four M4 x 16 mm long hex. head screws - all supplied with the kit.
19. Pass the flue tube sleeve down through the adaptor and over the fan outlet and push fully home.
20. Lower the flue system down into the adaptor, ensuring that the inner tube of the flue locates over the flue tube sleeve on the fan outlet. Secure the flue to the adaptor using the three No.8 x 10 mm long screws, supplied with the kit, into the three pilot holes previously drilled.
21. Connect the secondary flue system.

## Connect The SECONDARY FLUE To The VERTEX FLUE

1. Always use compatible flue pipes, sockets, connectors, etc. for the complete flue system. Do not mix components from different manufacturers.
   The secondary flue must comply with BS5440:1 in respect to routing, supporting, weather proofing, fire precautions and must be connected to a suitable ridge or roof terminal.

The flue outlet size is suitable for connection to pipe conforming to BS567 or BS715 with a suitable adaptor.

2. Suitable flue systems are available from:-
   (a) Rite Vent
   Armstrong Industrial Estate
   Washington
   Tyne and Wear
   NE37 1LH
   Tel: 0191 4161150
   Using their 4" Twin Wall B Vent flue system with a standard boiler connector, Part No. 145/04.

   (b) Selkirk Metalbestos
   Customer Services
   Pottington Industrial Estate
   Barnstable
   North Devon
   EX31 1LZ
   Tel: 01271 22551
   Using their 4" Twin Wall IL Gas Vent flue system with special draught hood connector, Part No. 55504.

3. Three No.10 x 25 mm long screws are supplied with the kit to centralise the connector into the Vertex Flue socket. This connector must be adequately sealed to the Vertex Flue socket.
4. Complete the boiler installation as described in the boiler Installation instructions.
5. Instruct the User not to store anything in the roof space adjacent to the openings in the Vertex Flue pipe, nor to block any purpose designed ventilation openings in the roof space.

| Length of Vertex Flue (dimension A) | |
|---|---|
| No flue extension | 1170mm |
| One flue extension | 2170mm |
| Two flue extensions | 3170mm |
| Three flue extensions | 4170mm |

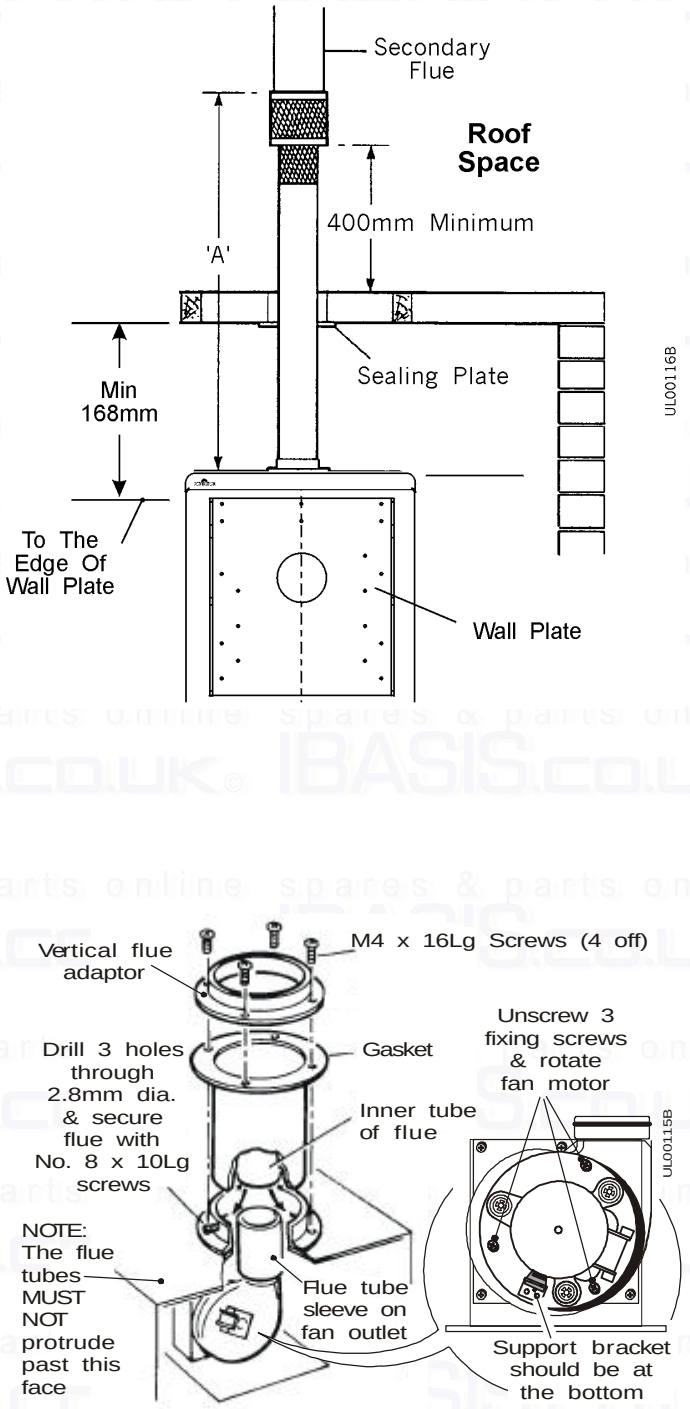


Fig. 26

## 2.9 Fit the Optional Fit From The Inside Flue Kit

The Fit From the Inside Flue Kit allows the flue/terminal assembly to be fitted entirely from inside the building and is suitable for rear or side exit flue. The kit is only suitable for walls 100 - 375 mm thick and requires a 152 mm diameter hole to be cut through the wall.

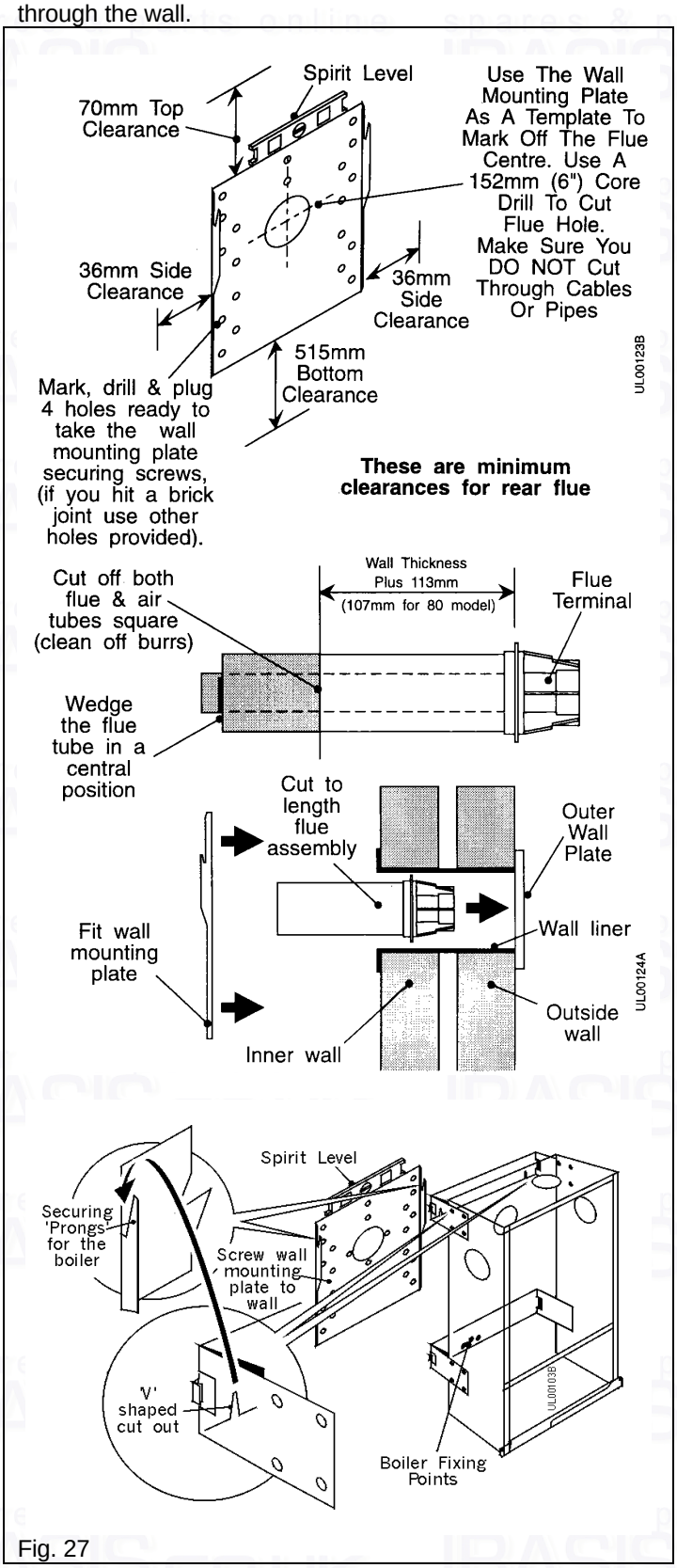


Fig. 27

| Description | Qty |
|---|---|
| Outer wall plate assembly | 1 |
| Wall lining tube | 1 |
| Flue retaining bracket | 2 |

Carefully unpack the kit, do not discard the packaging until all the items are found.

### To Fit The FIT FROM THE INSIDE FLUE KIT With REAR Exit Flue

The rubber seal, inner plate, wall liner and outer wall plate supplied with the horizontal flue terminal are not required with this kit.

1. Having noted the clearances needed for installation (flue terminal & boiler), position the wall plate against the wall (ensure it is level) and mark the position of the flue hole and a minimum of four of the mounting holes. Remove the wall plate.

**Important:** Before cutting through the wall ensure there are no water pipes, gas pipes or electric cables.

2. Cut a 152mm diameter hole through the wall.
3. Measure the wall thickness and cut the liner supplied with this kit to the finished wall thickness LESS 2mm. Cut the end without the hooks and ensure the cut is square. Insert the wall liner into the wall, ensure the seam is to the top and that the tabs are vertical, (no screws are required as the wall liner will be held in place by the wall mounting plate).
   Make good the wall (if required).
4. The outer wall plate is made so that when it is opened it is not flat. Do **NOT** try to bend it flat. Tie a suitable length of string to one of the wall plate chains to support it if it is inadvertently dropped outside when fitted. With the other end of the string secure, fold the wall plate, pass it through the wall lining tube and unfold outside. With the springs in line with the hooks on the wall lining tube, carefully pull back on the chains ensuring that the four returns are located inside the lining tube. When the springs are well in tension, hook the chains over the retaining hooks. Remove the string previously tied to the chain.
5. To measure the flue length take the wall thickness & add 113mm, from the flue terminal flange measure & mark the flue. See Fig.27. Add a further 40mm if the wall spacing plate is fitted.
   Put wedges in the end of the flue to stop the outer flue compressing onto the inner. Cut squarely through both the inner and outer tubes. Remove all burrs.

Fit the flue terminal in the wall liner.

6. Attach the wall plate to the wall. Ensure it is level. Slide the flue assembly back into the room, so the flue terminal disengages from the outer wall plate. The flue assembly will then be angled downward ready to accept the boiler chassis.
7. Remove the clamping plate & sealing ring from the boiler chassis.
   Remove the flue hood. See Fig. 38
   Lift the boiler into position guiding the flue assembly through the rear flue outlet & hook the boiler onto the wall plate using the two V shaped cut outs in the top mounting bracket. See Fig.28.
8. Choose on of the bottom boiler fixing points. Mark the position then drill and plug to accept a 1" woodscrew (not supplied). Insert a screw into the bottom fixing hole & secure the boiler.
9. Secure the flue sealing ring in position with the clamping plate using two screws.
10. Fit the two flue retaining brackets, supplied with this kit, to the remaining two holes in the flue sealing ring clamping plate using the remaining two screws. Carefully bend the brackets over the edge of the outer flue tube to retain it in position (to stop the flue being pushed into the boiler). Refit the flue hood.
11. Insert a woodscrew (not supplied) into the bottom fixing hole to secure the boiler to the wall.
12. Ensure that the 'O' ring is in position on the fan outlet, then fit the flue tube sleeve over the fan outlet and push it fully home.
13. Place the fan assembly on top of the flue hood with the outlet facing to the rear and reconnect the two fan motor leads (polarity not important) and the air pressure switch tube.
14. With the fan assembly resting on the flue hood push it towards the rear of the boiler, locate the flue tube sleeve on the fan outlet into the inner tube of the flue/terminal assembly and push the fan assembly fully home until the base is located under the returns at the rear of the flue hood.
15. Secure the front of the fan assembly to the flue hood with the two screws previously removed.
16. Remove the four screws securing the transit plate to the bottom of the boiler, discard the plate and screws.
17. Remove the screw and unhook the base plate - DO NOT discard these items.
18. **Proceed to Section 2.10.**

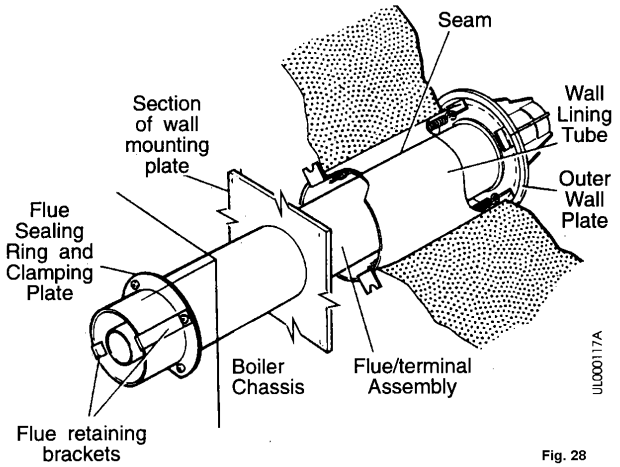

Fig. 28

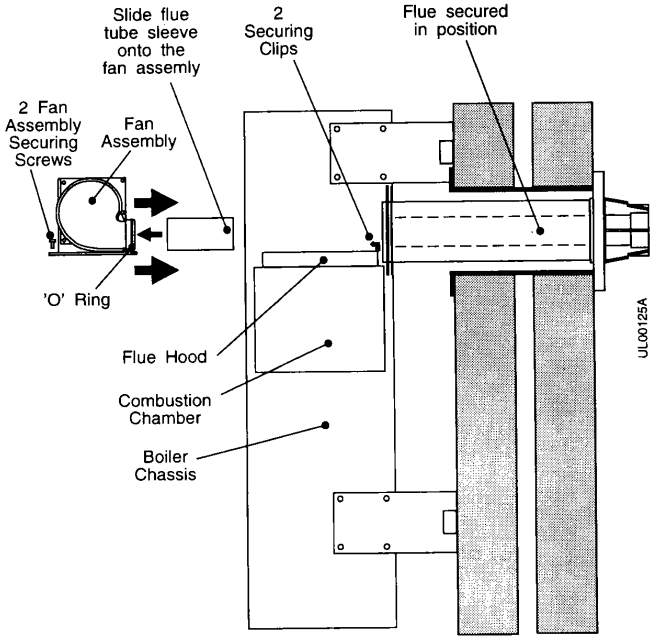

Fig. 29

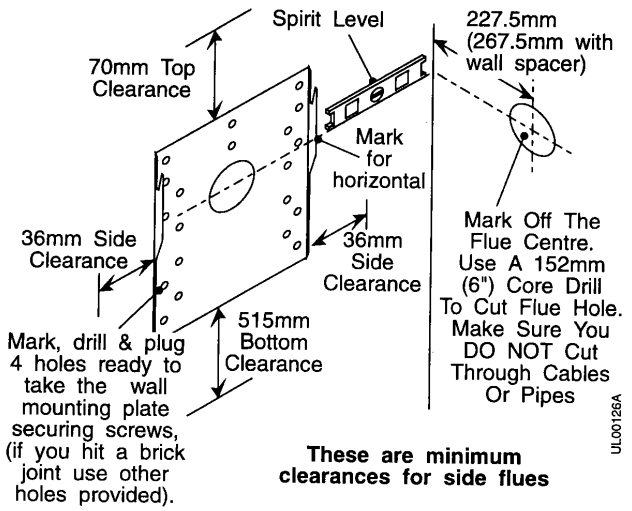


Fig. 30

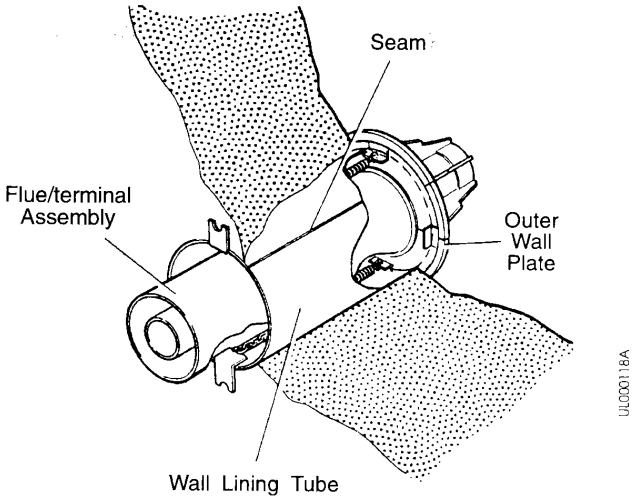


Fig. 31

## To Fit The FIT FROM THE INSIDE FLUE KIT With SIDE Exit Flue

With side exit flue a minimum of 25 mm clearance is required on the opposite side to the flue for installation. The rubber seal, inner plate, wall liner and outer wall plate supplied with the horizontal flue terminal are not required with this kit.

1. Having noted the clearances needed for installation (flue terminal & boiler), position the wall plate against the wall (ensure it is level) and mark the position of four of the mounting holes. Remove the wall plate.
   **Important:** Before drilling or cutting the wall ensure there are no water pipes, gas pipes or electric cables.
2. Drill and plug the mounting holes to accept 2½" long woodscrews (not supplied).
3. Attach the wall plate to the wall. Ensure it is level.
4. From the centre of the flue hole on the wall plate draw a level horizontal line along the wall to the corner, continue the line along the side wall and mark the position of the flue hole as shown.
5. Cut a 152mm diameter hole through the wall.
6. Measure the wall thickness and cut the liner supplied with this kit to the finished wall thickness LESS 2mm. Cut the end without the hooks and ensure the cut is square. Insert the wall liner into the wall, ensure the seam is to the top and that the tabs are horizontal.
7. The outer wall plate is made so that when it is opened it is not flat. Do **NOT** try to bend it flat. Tie a suitable length of string to one of the wall plate chains to support it if it is inadvertently dropped outside when fitted. With the other end of the string secure, fold the wall plate, pass it through the wall lining tube and unfold outside. With the springs in line with the hooks on the wall lining tube, carefully pull back on the chains ensuring that the four returns are located inside the lining tube. When the springs are well in tension, hook the chains over the retaining hooks. Remove the string previously tied to the chain.
8. Lift the boiler into position over the wall plate. The two V shaped cut outs in the top mounting bracket locate behind the two prongs on the wall plate.
   **Note:** If the measurement taken in 9 below is less than 600mm carry on with the installation, if greater than 600mm go to
   Section 2.5.
9. Measure the wall thickness from the edge of the outer wall to the flue hole in the boiler chassis. Add 15mm and mark this distance on the flue from the terminal flange.

Put wedges in the end of the flue to stop the outer flue compressing onto the inner. Cut squarely through both the inner and outer tubes. Remove all burrs.

10. Mark one of the boiler fixing points, then drill and plug to accept a 1" woodscrew (not supplied).
11. Remove the clamping plate & sealing ring from the rear flue outlet & place to one side. Remove the blanking plate from the side of the chassis & fit to the rear flue outlet. Fit the flue terminal in the wall liner. For the moment the flue assembly is not engaged in the outer wall plate, it will be angled downward ready to accept the boiler chassis. Slide the inner wall seal over the flue assembly.
12. Remove the cover plate from the white case side. Fit white side panel to boiler.
13. Guide the flue assembly through the side flue outlet & hook the boiler onto the wall mounting plate, using the two 'V' shaped cut outs in the top mounting bracket. See Fig.32
14. Fit the flue terminal into the outer wall plate. Secure the flue sealing ring in position with the clamping plate using two screws.
    Fit the two flue retaining brackets, supplied with this kit, to the remaining two holes in the flue sealing ring clamping plate using the remaining two screws. Carefully bend the brackets over the edge of the outer flue tube to retain it in position (to stop the flue being pushed into the boiler).
15. Insert a woodscrew (not supplied) into the bottom fixing hole to secure the boiler to the wall . Slide the inner wall seal up to the wall so it covers over the wall liner.
16. Ensure that the 'O' ring is in position on the fan outlet, then fit the flue tube sleeve over the fan outlet and push it fully home.
17. Place the fan assembly on top of the flue hood with the outlet facing to the side and reconnect the two fan motor leads (polarity not important) and the air pressure switch tube.
18. With the fan assembly resting on the flue hood push it towards the rear of the boiler, slide sideways and locate the flue tube sleeve on the fan outlet into the inner tube of the flue/terminal assembly. Push the fan assembly fully home until the base is located under the returns at the rear of the flue hood.
19. Secure the front of the fan assembly to the flue hood with the two screws previously removed.
20. Remove the four screws securing the transit plate to the bottom of the boiler, discard the plate and screws.

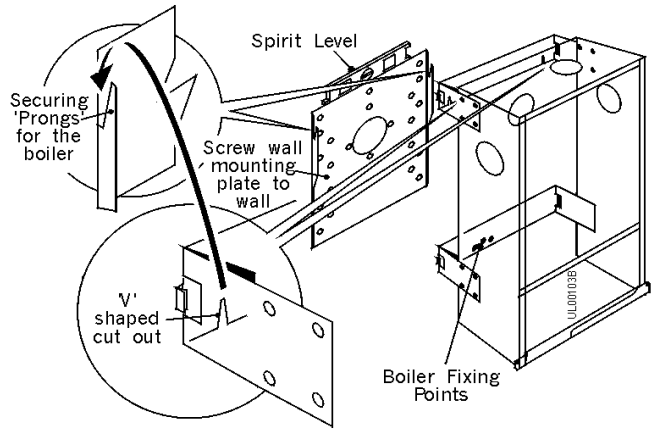


Fig. 32

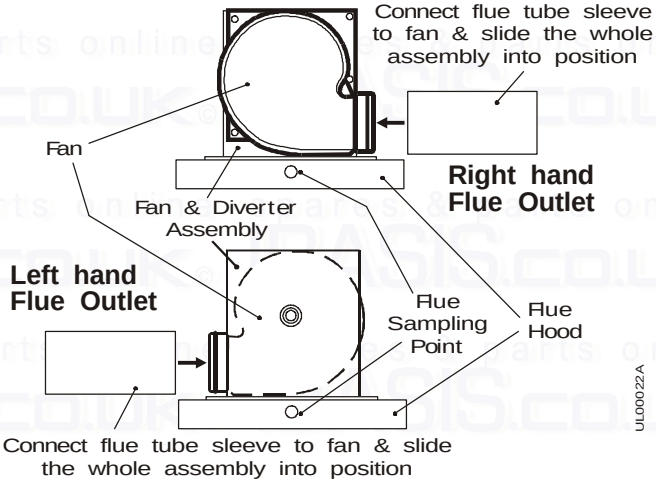


Fig 33

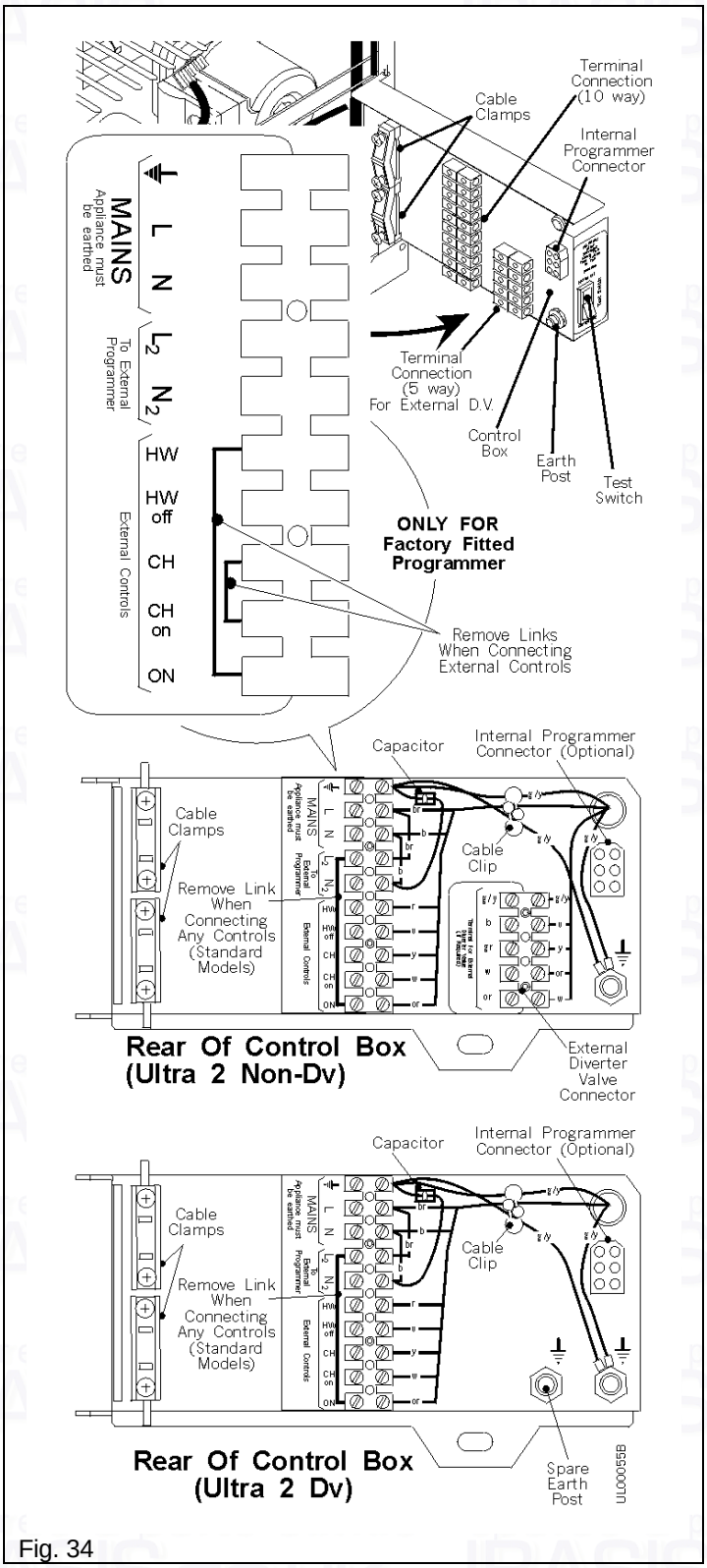


Fig. 34

21. Remove the screw and unhook the base plate - DO NOT discard these items.

## 2.10 Connect the Power Supply Cable

1. Remove the screw securing the control box to the thermostat mounting bracket. Swing the control box out.
2. Two cable clamps are provided on the back of the control box, use one just for the mains supply and the other for any other external wiring. Slacken the necessary cable clamp screws. Feed the power supply cable up and over the back of the chassis, through the uppermost clamp and into the terminal connection. Connect the wires, brown to L and blue to N and green/yellow to earth ().

   **Note:** When connecting the power supply cable, ensure that the length of the earth wire is such, that if the power supply cable pulls out of the cable clamp the live and neutral wires become taut before the earth wire.

3. Any external control wiring should be routed up and over the back of the chassis, through the lower cable clamp and connect to the terminal connection.
4. Take up excess slack in the power supply cable between the terminal block and the cable clamp, then tighten the cable clamp screws. Repeat for any wires through the other cable clamp.

   **Note:** If the optional internal programmer is to be fitted, do so now - See Section 2.11 overleaf.

5. Sufficient slack is available to the cable clamps to alllow pivotel movement.
6. Secure the control box to the thermostat bracket using the screw previously removed.
   Ensure enough cable slack is allocated to allow the Control Box door to open and close.
7. Carry out preliminary electrical system checks i.e. Earth Continuity, Short Circuit, Polarity and Resistance to Earth.

   **Do not switch on the electricity supply at this stage.**

## Wiring Diagrams: With External Programmer Fitted (2 Channel Programmer) With Room & Cylinder Thermostats

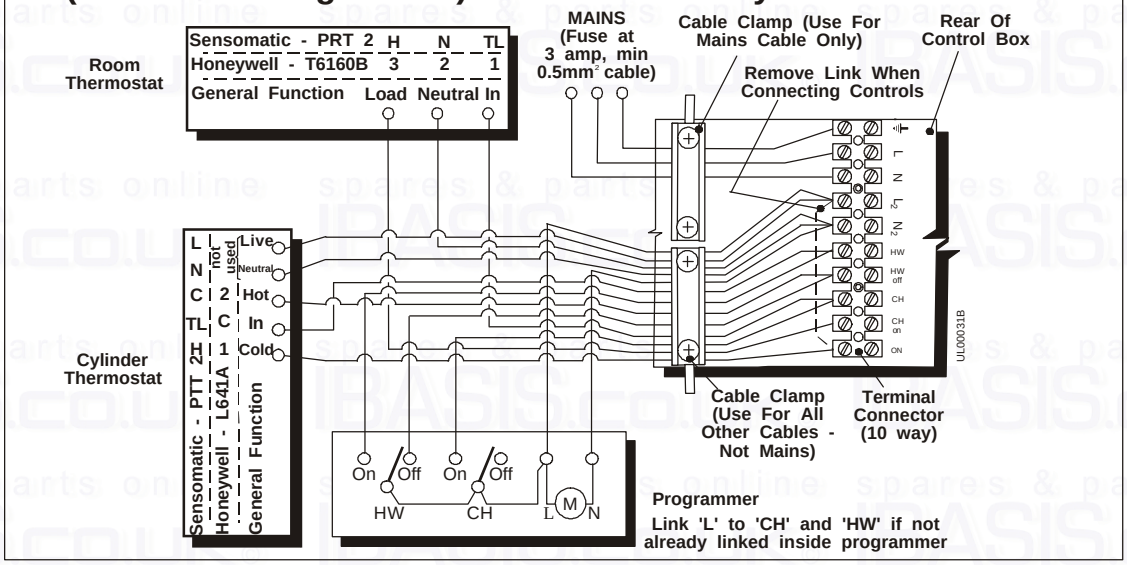


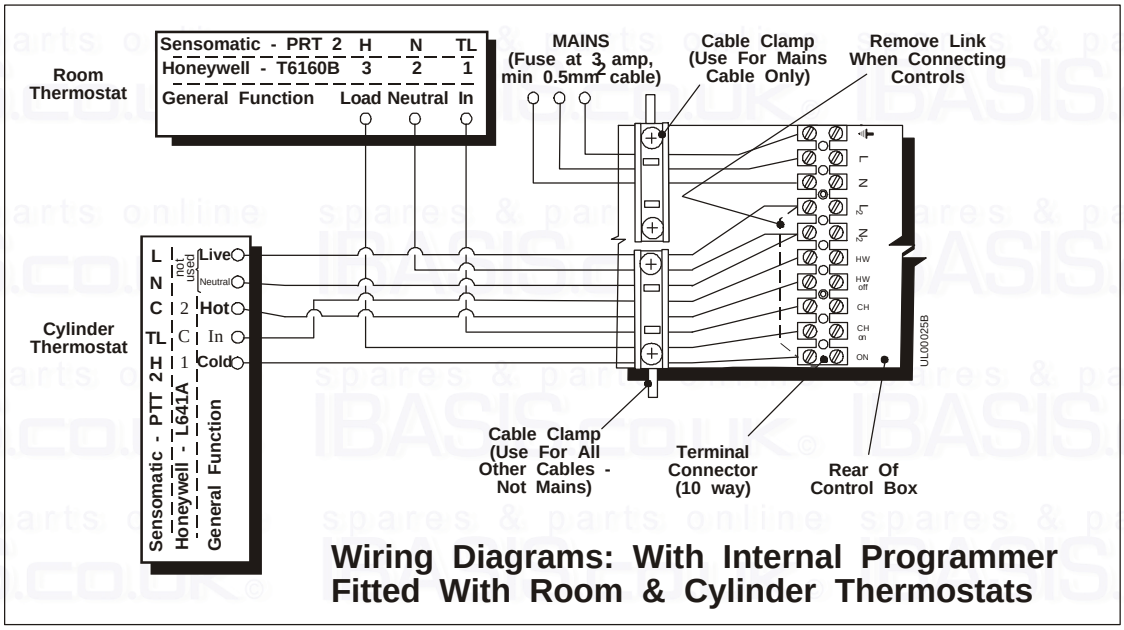


## Wiring Diagrams: With Internal Programmer Fitted With Room & Cylinder Thermostats

## For non- D.V. Models (connections for an external D.V.)

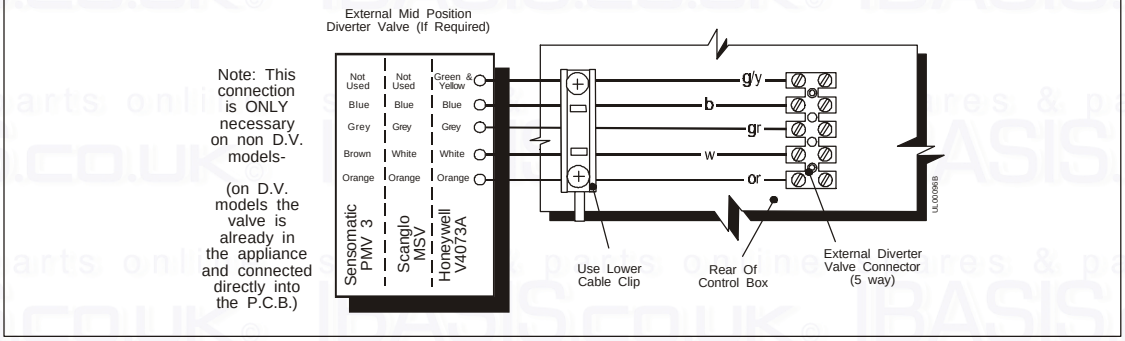


Fig. 35

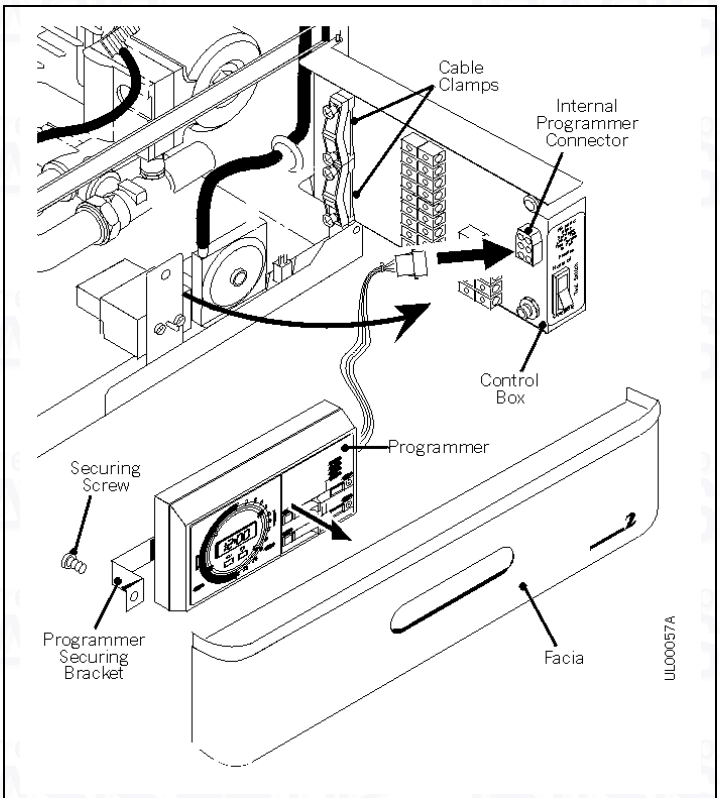


Fig. 36

## 2.11 Install the Optional Ultra 2 Programmer

1. Connect the programmers electrical plug onto the socket on the back of the control box.
2. Carefully remove the blanking panel from the facia (the facia label is self adhesive), locate the programmer into the cut out, position the retaining bracket and secure using the screws supplied with the programmer.
3. Leave the facia hanging down for the time being.

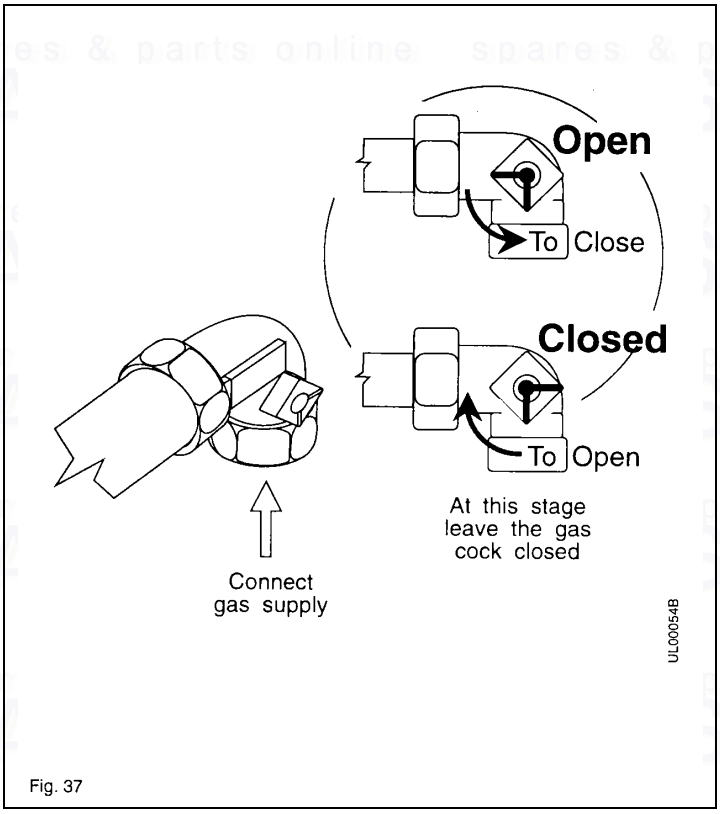


Fig. 37

## 2.12 Connect the Gas Supply

Connect the gas supply using a suitable adaptor to the gas cock.

The pipe diameter required will depend on the boiler model and the pipe length from the gas meter. 15mm dia. pipe will be adequate for the following lengths:

Boiler Models:

30 = 15m.
40 = 9m.
50 = 7.5m.
60 = 5m.
80 = 3m.

These lengths must be reduced by 0.5m for each elbow and tee fitted.

Longer lengths will require the use of 22mm diameter pipe.

**Note:** The gas supply must be from below, as the boiler chassis extends below the gas cock.

Do not turn the gas supply on at this stage.

## 2.13 Connect the Water System & Vent the Boiler

1. Ensure that the plastic plugs are removed from the pipe ends and attach the isolation valves. Check the valves are open.
2. Install the pressure relief valve discharge pipe (min. 15mm dia.) and connect to the pressure relief outlet using a 15mm compression fitting. This will enable the connection to be undone if the boiler has to be removed.

   **Important:** The pipe run should be as short as possible, run continuously downwards and discharge outside the building and over a drain. It must not discharge above an entrance, window, any type of public access point, any point where it would be hazardous to occupants or cause damage to external electrical components or wiring.
3. Screw the pressure gauge connection into the water manifold, leave the facia hanging down.
4. Fill the system, ensure that all valves are open.

   ***Dv Models Only:*** The manual lever on the left hand side of the diverter valve, must be moved from 'AUTO' to 'MID' (manual override) when filling, venting or draining the system.

   Thoroughly flush the system through. A radiator type air vent is positioned on the left hand side (at the front) of the heat exchanger (on 80 models a second vent is positioned at the rear).
5. Refill and vent the system.
6. The pump bearings and shaft rely on system water to provide lubrication. It is important therefore to ensure that the bearings have been properly vented and **that the pump is not run dry** otherwise damage may occur to the bearings. Unscrew the pump manual restart knob, and withdraw it to engage in the motor shaft. Rotate the knob and check that the motor shaft rotates freely. Apply a sideways pressure to the knob until a small amount of water becomes visible. The pump is now vented. After use, the manual restart knob should be screwed back into its original position, finger tight. Take care not to allow any water to drip onto the control box or other electrics.
7. Pressurise the system to 1.5 bar and check for leaks, rectifying where necessary. Reset the system pressure to 0.8 bar and set the red adjustable pointer on the pressure gauge to 0.8 bar.

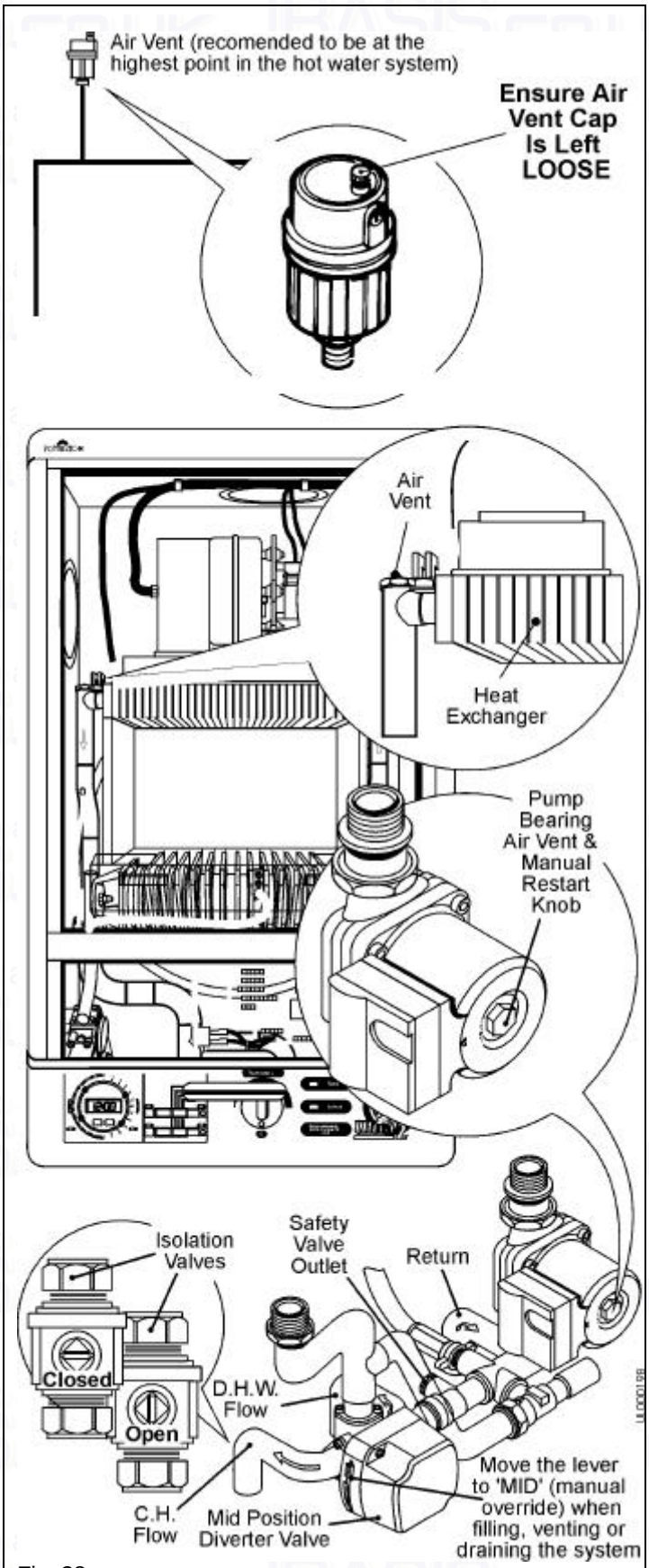


Fig. 38

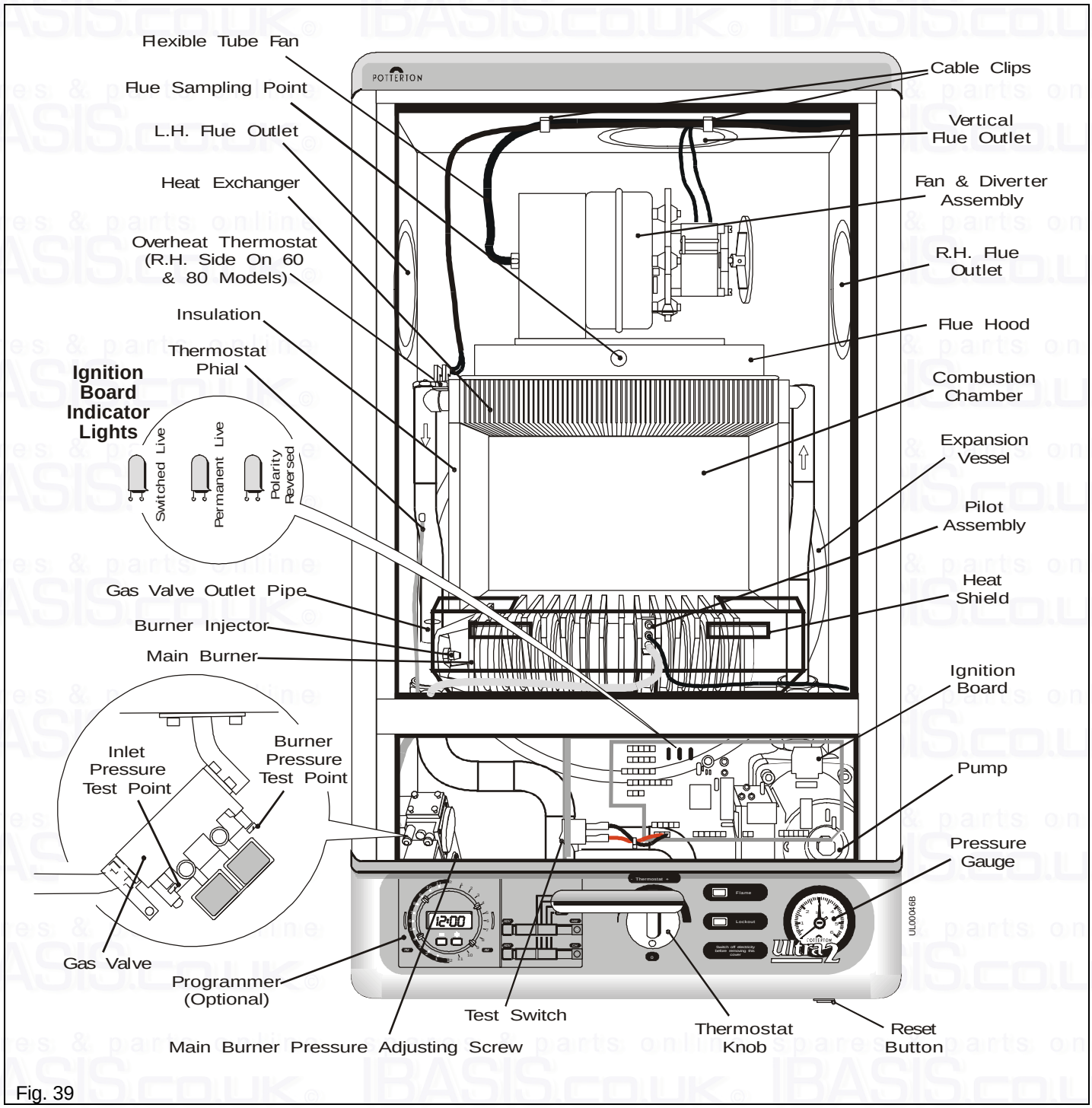


Fig. 39

## 3.1 Commission the Boiler

1. **Prepare the boiler.**
   a. A test switch is provided at the left hand side of the control box which will allow the boiler to operate during commissioning without the programmer or external controls connected. Push the thermostat knob onto the spindle.

2. **Test for gas soundness and purge the supply.**
   a. With the boiler gas cock closed (the cock is closed when the operating spindle is turned fully anti-clockwise), pressure test the gas supply and inlet pipework connection to the boiler gas cock for soundness in accordance with BS6891.
   b. Remove the gas inlet pressure test point screw. Ensure the gas supply is on and open the boiler gas cock to purge in accordance with BS6891. Replace the test point screw and test for gas soundness around the screw.

**3. Check the ignition sequence.**

With the gas supply isolated check the ignition sequence as follows:

a. Set the test switch to 'Override'.

**Note:** Three indicator lamps are included on the ignition board to aid electrical commissioning. The correct sequence of lights when there is a call for heat is: Permanent Live 'On', Switched Live 'On', Reversed Polarity 'Off'.

b. Switch on the electricity supply and turn the thermostat knob fully clockwise. The automatic ignition sequence will commence. The fan will start and after a short purge period a click will be heard indicating that the start gas solenoid has opened, ignition sparks will also be heard. The ignition sparks will continue until the pilot is lit but as the gas supply is not yet turned on the ignition sparks will continue until either the electricity supply is switched off or the thermostat knob is turned off (fully anti-clockwise).

c. Turn the thermostat knob fully anti-clockwise to terminate the ignition sequence.

**4. Check the pilot flame and test the pilot supply for gas soundness.**

a. Ensure that the gas and electricity supplies are on, the thermostat knob is turned fully anti-clockwise and the test switch is set to 'Override'.

b. Turn the thermostat knob fully clockwise. The unit will go through the ignition sequence. The pilot will light and a second or so after the pilot has lit the main gas solenoid will open and the main burner will light.

c. During the short pilot only period, check that the flame is 35 to 40 mm long and envelops the electrode. The pilot throttle is factory set fully open (turning the throttle clockwise reduces the flame).

d. Turn the thermostat knob fully anti-clockwise. Re-fit the combustion chamber cover and secure with the screws previously removed. Turn the thermostat knob fully clockwise, to relight the boiler.

e. Test the pilot supply connections at the gas valve and pilot assembly for gas soundness using a suitable leak detecting fluid.

f. Turn the thermostat knob fully anti-clockwise.

**5. Test the main burner supply for gas soundness.**

a. Ensure that the gas and electricity supplies are on, the thermostat knob is turned fully anti-clockwise and the test switch is set to 'Override'.

b. Turn the thermostat knob fully clockwise. The unit will go through the automatic ignition sequence and the pilot will light. A second or so after the pilot is lit the main gas solenoid will open and the main burner will light.

c. Test the main burner manifold connection at the gas valve for gas soundness using a suitable leak detecting fluid.

**6. Check the main burner setting pressure.**

After the main burner has been alight for 10 minutes:

a. Turn the thermostat knob fully anti-clockwise. Remove the burner pressure test point screw on the gas valve and connect a pressure gauge. The pressure increases in two stages, to a 1st step for a few seconds then to full pressure.

**Note:** The boiler is factory set to the maximum input, the 1st step pressure is also factory set and should not require further adjustment. See Technical Data, Page 3, for the boiler ratings and setting pressures.
The adjusting screw is covered by a plastic cap, carefully prise this off with a suitable screwdriver and replace after adjusting the pressure.

b. Turn the thermostat knob fully clockwise and check the burner setting pressure.
Turn the adjusting screw clockwise to decrease the setting pressure.

c. Turn the thermostat knob fully anti-clockwise, disconnect the pressure gauge and replace the pressure test point screw. Turn the thermostat knob fully clockwise to light the main burner and test for gas soundness around the pressure test point screw using a suitable leak detecting fluid. Turn the thermostat knob fully anti-clockwise to turn the boiler off.

**7. Complete the commissioning.**

a. Check that the arrow on the data label (positioned on the left hand side of the chassis next to the gas valve) is against the correct boiler rating.

b. Switch off the electricity supply to the boiler.

c. Set the test switch to 'Normal' if a programmer or external controls are used.

**Note:** The pilot burner is turned off every time the main burner is off. The ignition sequence is automatically activated when the boiler thermostat requires heat. The boiler is fitted with two neons, a green one that lights when the main burner is alight and a red neon that will light if the boiler has locked out. If the boiler does lock out a re-set button is located under the front of the boiler at the right hand side.

## 3.2 Check the Water System

1. When the system has been tested, ensure that the boiler is turned off. Drain the water while it is still hot, in order to complete the flushing process.
2. Where the boiler is used on an old system, special care is required. The system should be drained and flushed out, ensuring that all the radiators are drained. Also check the radiator valves.
3. In areas with hard or aggressive water, we recommend that an inhibitor, suitable for use with copper tube boilers, should be used in accordance with the manufacturers instructions.
4. Refill, vent the system, boiler and pump.
5. Pressurise the system to 1.5 bar and check for leaks, rectifying where necessary.
6. The Boiler Thermostat is factory set & sealed, this MUST NOT be tampered with.

## 3.3 Balance the System

1. Fully open all the radiator lock shield valves and set any thermostatic radiator valves to maximum.
2. With the electricity supply on and the test switch set to 'Override', turn the thermostat knob fully clockwise to light the boiler.
3. Balance the system using the radiator lock shield valves to give a temperature drop of 10°C across the individual radiators - start with the radiator nearest to the boiler.
4. Turn the thermostat knob fully anti-clockwise to turn the boiler off.
5. Set the test switch to 'Normal' if a programmer or external controls are used.

## 3.4 Complete the Boiler

1. Hook the base plate onto the rear of the chassis and secure at the front using the screw previously removed.
2. On rear/vertical/vertex flues locate the white case side(s) and secure to the front of the boiler using the screws previously removed.
3. Hook the white front case on at the top of the boiler, position so the ball studs align with the holes in the white case sides and push firmly to engage them.
4. Locate the facia assembly onto the front of the boiler and secure to the white case sides using the two countersunk screws previously removed.

## 3.5 Light the Boiler

If a programmer is fitted refer to the Instructions for Use on how to set the programmer.

**Do not** attempt to light the boiler if the system pressure is less than 0.5 bar. Pressurise the system to 1.5 bar and check for leaks, rectifying where necessary. Adjust the pressure down to 0.8 bar.

With the gas supply on and the electricity supply off.

1. Turn the thermostat knob fully anti-clockwise to 0 (Off).
2. Switch on the electricity supply, set the programmer to continuous, if a programmer is fitted and check that all system controls are calling for heat.
3. Turn the thermostat knob fully clockwise to maximum. The automatic ignition sequence will commence. The fan will start and after a short purge period a click will be heard indicating that the start gas solenoid has opened, the ignition sparks will also be heard. The pilot will light and after a second or so the main gas solenoid will open and the main burner will light.
   A green neon, positioned on the facia, will light whenever the main burner is alight.
   **Note:** The pilot burner is turned off every time the main burner is off. The ignition sequence is automatically activated when the boiler thermostat requires heat.
4. If a programmer is fitted, ensure that the timer is set to the correct time and the programme is set to the required settings. Ensure that the test switch is set to 'Normal'.

## 3.6 Advise the User

1. If a programmer is fitted, set the timer to the correct time and programme the required settings. For a wall mounted programer, see separate programmer instructions. For the Ultra 2 programmer, see the boiler Instructions for Use.

2. Hand the Instructions for Use, these Installation & Service Instructions (and the programmer instructions) to the User and instruct in the safe operation of the boiler and controls.

3. Advise the User of the precautions necessary to prevent damage to the system and to the building in the event of the system remaining inoperative during frost conditions.

4. Advise the User that for continued efficient and safe operation of the boiler it is important that adequate servicing is carried out at least once a year by the local Gas Region or a C.O.R.G.I. registered Installer.

5. Advise the User how to 'Top Up' the system, to maintain pressure.

6. Leave a permanent card attached to the boiler giving:
   a. Name and address of installer.
   b. Date of installation.
   c. A wiring diagram of the circuit.

# 4. Annual Service

To ensure continued efficient operation of the appliance, it is recommended that it is checked and cleaned as necessary at regular intervals.
The frequency of servicing will depend upon the particular installation conditions and usage but in general once per year should be adequate.
It is the law that any service work must be carried out by a competent person such as British Gas or other C.O.R.G.I. Registered Personnel.

The following aspects of the boiler and installation should be examined, and rectified as necessary.

1. Check that the system pressure is 0.8 bar (cold).

2. Run the boiler and check the operation of its controls and ensure that it responds to any switches and programmer.

3. Check the installation of the flue terminal and ensure it is not obstructed.

**Note:** A flue sampling point has been provided on this boiler. It is accessible after removal of the white front case, and removal of the 17mm A/F hexagon head bolt from the combustion chamber cover.

If it is necessary to dismantle the boiler the following checks should be made.
1. Remove the combustion fan and ensure that it is clean and free of debris. Check the impellor for freedom of rotation.
2. Remove the combustion chamber front and check if the burner or heat exchanger requires cleaning.
3. Examine the main injector orifice and ensure it is clear and undamaged.
4. If a sufficiently large pilot flame cannot be achieved examine the pilot injector orifice to ensure it is clear and undamaged. (See Fig. 54).
5. When refitting the inner case front panel check that the seals are in good condition and compress satisfactorily.

On completion of the service run the boiler and ensure that it operates satisfactorily.
The Boiler Model and Serial Number/Code, are given on the Data Badge.
The boiler data label is on the left hand side of the chassis next to the gas valve.

**WARNING**
**Before commencing work open the control panel cover (hinges down) and turn the thermostat knob to O (Off). Allow the boiler to cool, isolate the electricity supply and turn off the gas at the gas service cock.**

**IMPORTANT**
**Always test for gas soundness after completing any servicing of gas carrying components and carry out functional checks of controls.**

# 5. Routine Maintenance - Page 36

## 5.1 Remove the Case

Ensure that the electricity supply is off.

1. Pull down the control cover flap to expose the facia. Remove the 2 screws securing the facia to the side panels and remove the facia/control cover carefully unclipping the two neons as you pull the facia away.

   **Note:** If required, disconnect the programmer harness from the rear of the control box. The facia can only be completely removed from the boiler if the pressure gauge connection is unscrewed and the boiler drained.

2. Pull the bottom of the white front case forward to release the bottom ball studs, continue pulling until the top studs release, then lift slightly and pull away from the boiler.
3. Place the case parts safely aside to avoid possible damage.

## 5.2 Dismantle the Boiler

1. Turn off the gas supply at the gas cock (bottom L.H. corner).
2. Remove the four screws (two at the top and two at the bottom) securing the combustion chamber cover.
3. Disconnect the overheat thermostat leads.
4. Remove the two screws securing the fan assembly to the flue hood. Carefully slide the fan assembly away from the flue to disengage the flue tube sleeve from the flue. Withdraw the fan assembly, disconnecting the fan motor leads and pressure switch tube.
   **Note:** If a Vertex or Vertical Flue is fitted, slide the flue tube sleeve up into the flue to disengage it from the fan outlet.
5. Remove the four screws securing the flue hood - two at the back (extended screws) and two at the front (30 to 60 Models), or two either side (80 models).
6. Lift the flue hood off the boiler.
7. Remove the two screws securing the burner heat shield to the combustion chamber insulation cover and remove the shield.
8. Remove the two screws securing the combustion chamber insulation cover and remove the cover.
9. Undo the securing nut and remove the spark electrode, from the pilot assembly.
10. Undo the tubing nut and disconnect the pilot supply from the pilot assembly.
    Carefully remove and retain the pilot injector.
11. Remove the two screws securing the right hand end of the burner to the chassis. Slide the burner to the right, to remove it from the main injector and withdraw the burner.

## 5.3 Cleaning the Boiler

1. Brush the heat exchanger from above and below using a suitable brush. Brush back to front **NOT** sideways. Remove any fallen deposits from the base of the chassis.
2. Brush the burner top and check that the flame ports are clear. Any blockage may be removed with a fine wire brush. Turn the burner open end down and tap gently to remove any debris.
3. If the pilot burner requires cleaning, remove the two screws securing it to the burner and remove, clean the burner head with a fine wire brush, then refit it to the main burner.
4. Check the condition of the spark electrode, clean with a fine wire brush if necessary.
5. Unscrew the main injector from the burner manifold (do not lose the sealing washer and on the 80 models an additional spacer), clean by blowing through or washing. Do **NOT** clear the injector with a pin or wire. Clean the pilot injector in a similar manner.
6. Re-fit the main injector - do not forget to fit the sealing washer and on the 80 models the spacer.
7. Remove the four screws securing the fan to the diverter (make a note which way the fan is fitted). Examine the fan impellor and carefully clean if necessary. Refit the fan to the diverter.

## 5.4 Re-assemble the Boiler

1. Re-assemble the boiler in reverse order. Also note the following points:-
   a. After refitting the spark electrode, check that the spark gap is 3 to 4mm.
   b. Ensure that the pilot supply and electrode lead pass through the white silicone grommet in the bottom of the chassis.
   c. The polarity is not important when re-connecting the overheat thermostat leads.
   d. Referring to the Commissioning Instructions(Page 32), light the pilot and check the flame, test the pilot supply for gas soundness and check the main burner setting pressure.

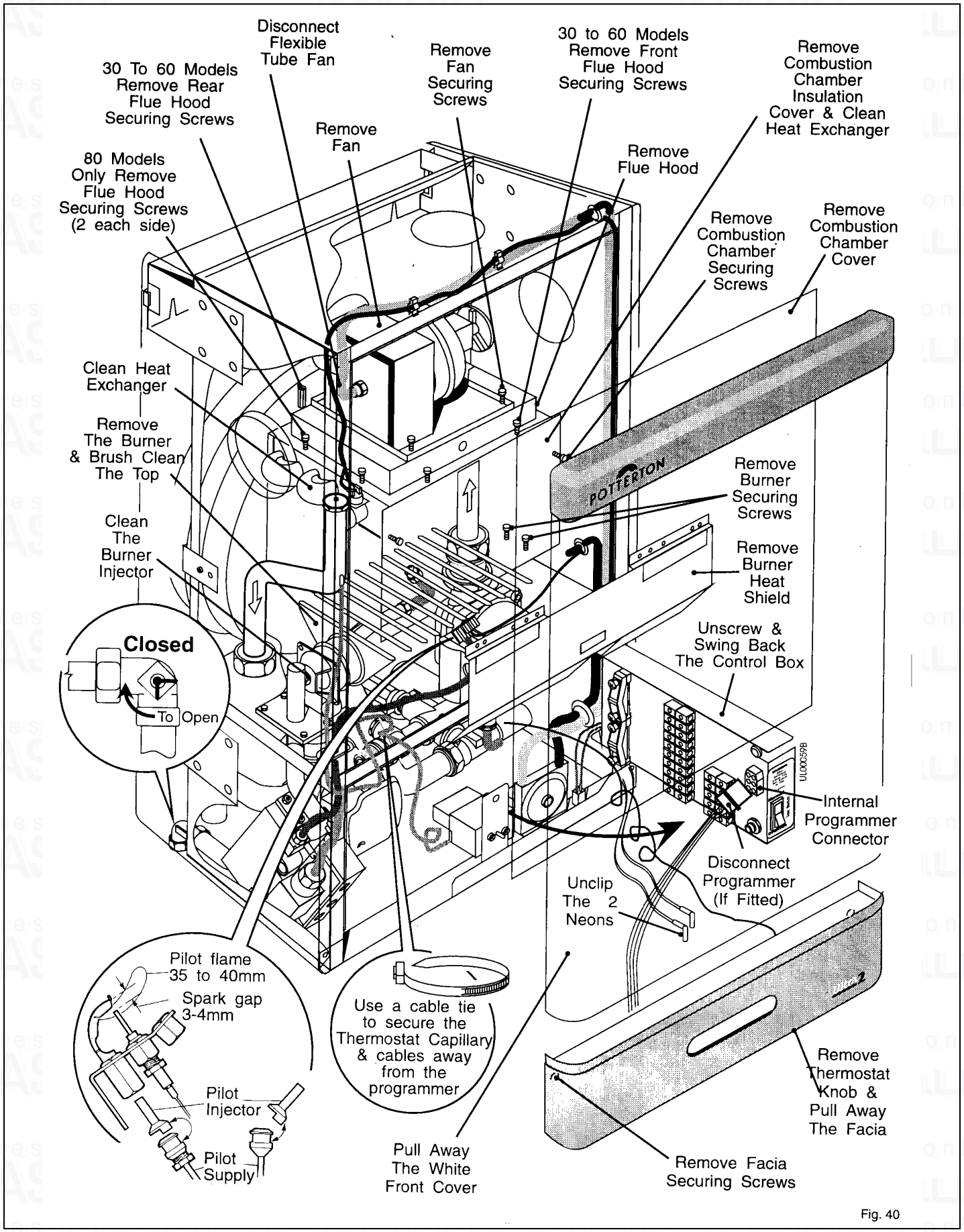
Disconnect Flexible Tube Fan
30 To 60 Models Remove Rear Flue Hood Securing Screws
Remove Fan Securing Screws
30 to 60 Models Remove Front Flue Hood Securing Screws
Remove Combustion Chamber Insulation Cover & Clean Heat Exchanger
Remove Fan
Remove Flue Hood
80 Models Only Remove Flue Hood Securing Screws (2 each side)
Remove Combustion Chamber Securing Screws
Remove Combustion Chamber Cover
Clean Heat Exchanger
Remove The Burner & Brush Clean The Top
Remove Burner Securing Screws
Clean The Burner Injector
Remove Burner Heat Shield
Closed
To Open
Unscrew & Swing Back The Control Box
UL0005/9B
Internal Programmer Connector
Disconnect Programmer (If Fitted)
Unclip The 2 Neons
Pilot flame 35 to 40mm
Spark gap 3-4mm
Use a cable tie to secure the Thermostat Capillary & cables away from the programmer
Pilot Injector
Pilot Supply
Pull Away The White Front Cover
Remove Thermostat Knob & Pull Away The Facia
Remove Facia Securing Screws

Fig. 40

# 6. Replacement Of Parts - Page 38

**WARNING:** Before commencing work open, the control panel cover (hinges down) and turn the thermostat knob to O (Off). Allow the boiler to cool and isolate the electricity supply. Turn off the gas at the gas service cock.

**IMPORTANT:** Always test for gas soundness after completing any exchange of gas carrying components and carry out functional checks of controls.

**All Models:** When removing and replacing any parts that involve draining the system, close the boiler isolation valves and then drain the boiler using the presure gauge connection. DO NOT use the safety valve to drain the boiler.

**Dv Models:** When removing and replacing any parts that involve draining the system, the manual lever on the left hand side of the diverter valve must be moved to the 'MID' (manual override) position. Return it to its original position after the system has been filled and vented.

**Non-Dv Models with external diverter valve:** When removing and replacing any parts that involve draining the system, it may be necessary to move a lever on the diverter valve, see manufacturers instructions for the particular valve. Return it to its original position after the system has been filled and vented.

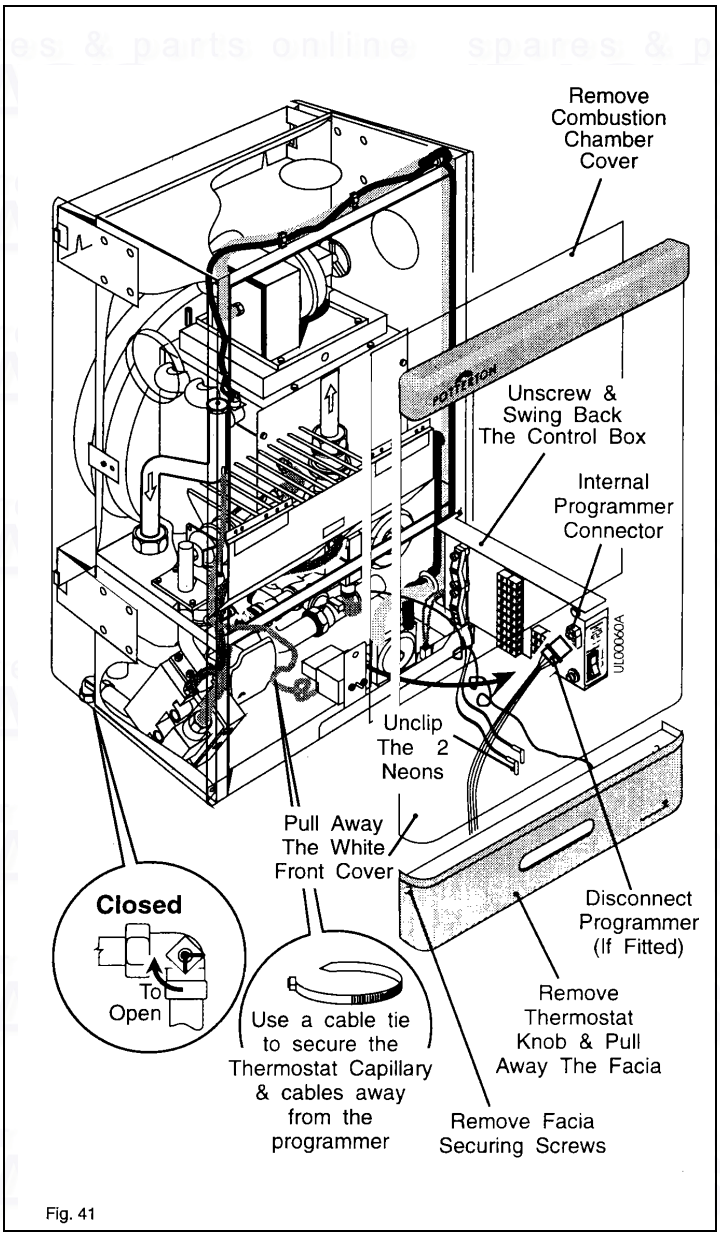


Fig. 41

## 6.1 General Access

1. Replacement of any component requires the removal of the facia assembly and white front case as follows:
   a. Pull down the control cover flap to expose the facia. Pull off the thermostat control knob. Remove the 2 screws securing the facia to the side panels and remove the facia/control cover, carefully unclipping the two neons as you pull the facia away.
   **Note:** The facia can only be completely removed from the boiler if the pressure gauge connection is unscrewed and the boiler drained. If fitted, disconnect the programmer harness from the rear of the control box.
   b. Pull the bottom of the white front case forward to release the bottom ball studs, continue pulling until the top studs release, then lift slightly and pull away from the boiler.
   c. Place the case parts safely aside to avoid possible damage.
   d. Remove the screw and unhook the bottom cover.
   e. Turn off the gas supply to the boiler at the gas service cock (bottom L.H. corner).
   f. Turn off the water supply to the boiler at the isolation valves.
   g. If required, remove the screw and swing out the control box.
2. Sections 6.14 to 6.21 involve replacement of components within the room-sealed section of the boiler. All necessitate the removal of the combustion chamber cover as follows:
   a. Remove the four screws securing the combustion chamber cover and lift it off.
   b. Remove the two screws and lift off the burner heat shield.

***Re-assemble all parts in reverse order.***

## 6.2 Gas Valve

1. Gain General Access - See Section 6.1, Paragraph 1.
2. Slacken the retaining screw and disconnect the gas valve electrical plug from the valve.
3. Disconnect the pilot supply from the top of the gas valve.
4. Undo the union at the gas service cock.
5. Remove the four 3 mm socket screws securing the gas valve to the burner manifold.
6. Remove the screw securing the inlet manifold to the side of the chassis, withdraw the gas valve.
7. Remove and discard the 'O' ring in the burner manifold.
8. Remove the four 3mm socket screws securing the inlet manifold and fit it to the new valve, using a new 'O' ring (both 'O' rings are the same).
9. With a new 'O' ring in the burner manifold secure the new valve to the manifold using the four socket screws previously removed.
10. Reconnect the pilot supply, gas service cock union, plug and secure the inlet manifold to the chassis.
11. Open the gas service cock and test the union and inlet manifold to gas valve connection for gas soundness.
12. Referring to the Commissioning Instructions, light the boiler, test the pilot supply and burner manifold connections at the gas valve for gas soundness. Adjust the burner pressure setting to give the correct rating as shown by the arrow on the data label, then adjust the 1st step pressure to that shown in the Technical Data on Page 3.
13. Re-assemble in reverse order. Ensure the harness is routed through the cable ties as shown in Figs 40 / 41.

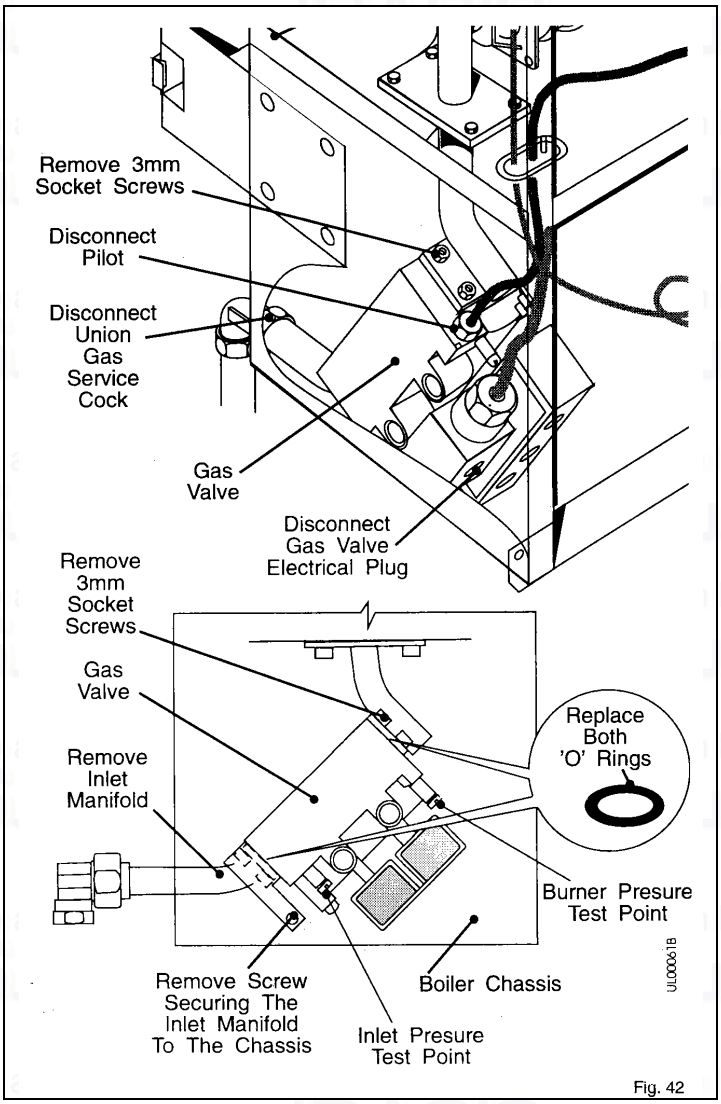

Fig. 42

## 6.3 Gas Valve Solenoids

1. Gain General Access - See Section 6.1, Paragraph 1.
2. Slacken the retaining screw and disconnect the gas valve electrical plug from the valve.
3. Remove the screw securing the solenoids mounting bracket and carefully withdraw the mounting bracket, complete with solenoids, from the valve.
4. Position the new solenoids in the mounting bracket, refit the mounting bracket.
5. Reconnect the plug to the gas valve and re-assemble all remaining parts in reverse order.
6. Refer to the Lighting Instructions on Page 34 and light the boiler.

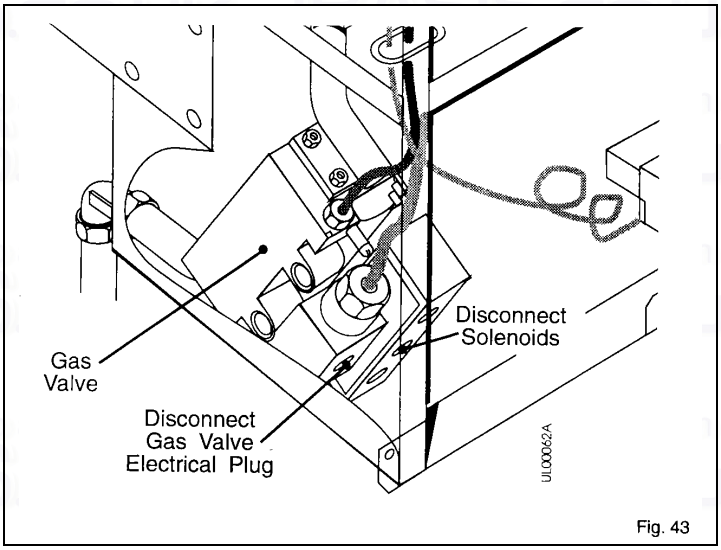

Fig. 43

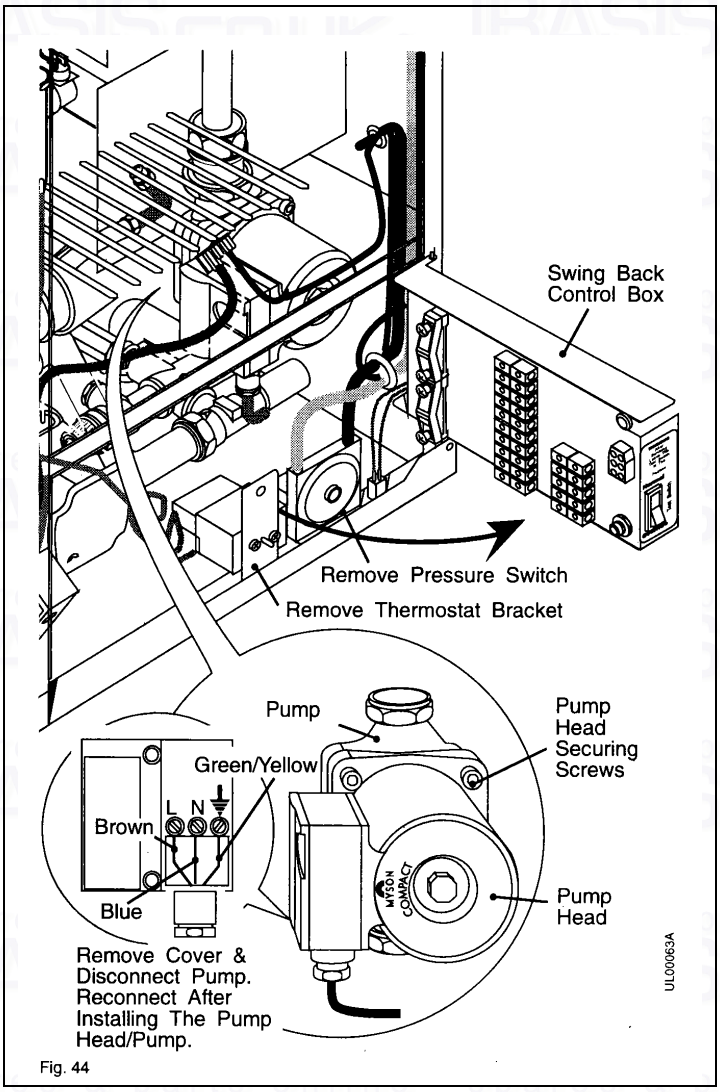

Fig. 44

## 6.4 Pump Head/Pump Complete

**Pump Head**

1. Gain General Access - See Section 6.1, Paragraph 1.
2. Remove the screw securing the pressure switch to the chassis and move the switch out of the way.
3. Remove the two screws securing the thermostat bracket to the chassis and move it out of the way.
4. Remove the two pump wiring cover screws, remove the cover and disconnect the wires.
5. Using an allen key, remove the four allen bolts and remove the pump head.
6. Position the new pump head and secure using the four allen bolts.
7. Connect the wires to the new pump as shown. Vent the pump as shown in Section 2.13

**Pump Complete**

1. Perform steps 1 to 4 above.
2. Place a cloth under the pump as it will contain a small amount of water when removed.
3. Loosen the two pump unions, taking care not to twist the pipework. Support the pump,fully release the two unions and withdraw the pump.
4. Position the new pump (use two new sealing washers) ensuring the arrow on the side of the pump points upwards and fully tighten the unions.
5. Rewire the pump as shown.
6. Vent the pump as described in Section 2.13 and check the pump connections for water soundness.
7. Re-assemble in reverse order.

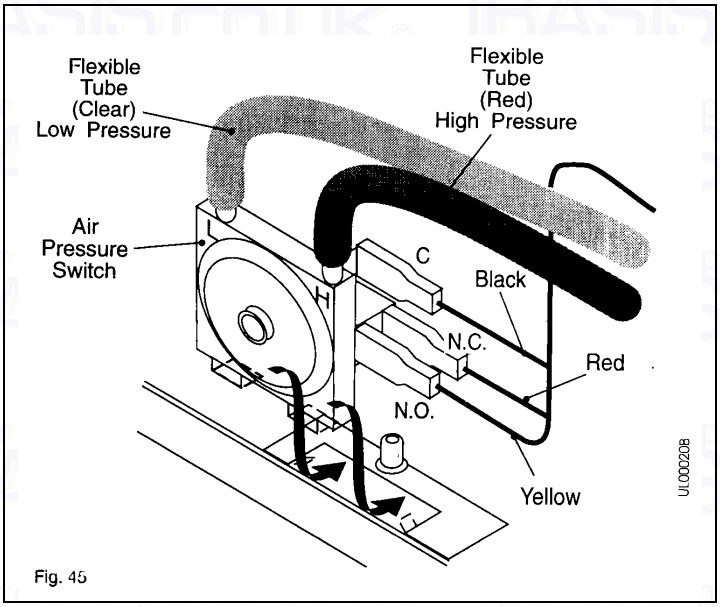

Fig. 45

## 6.5 Air Pressure Switch

1. Gain General Access - See Section 6.1, Paragraph 1.
2. Carefully disconnect the flexible tubes and the three leads from the pressure switch.
3. Slacken the screw securing the pressure switch mounting bracket to the boiler chassis. Note how the pressure switch is secured by the bracket and remove the switch.
4. Reconnect the pressure switch leads as follows: Yellow to 'NO', Red to 'NC' and Black to 'C'.
5. Locate the new pressure switch under the mounting bracket and fully tighten the securing screw.
6. Re-assemble in reverse order.

## 6.6 Diverter Valve Head Dv Models Only

1. Gain General Access - See Section 6.1, Paragraph 1.
2. Disconnect the diverter valve head wiring harness plug from the ignition circuit board.
3. Remove the two screws securing the diverter valve head to the main body and lift off the head.
4. Fit the diverter valve head to the valve body (operating lever at the left hand side), ensuring that the shaft seats correctly. Secure the head in position with the two new screws supplied.
5. Connect the diverter valve wiring harness plug onto the ignition circuit board.
6. Re-assemble in reverse order.

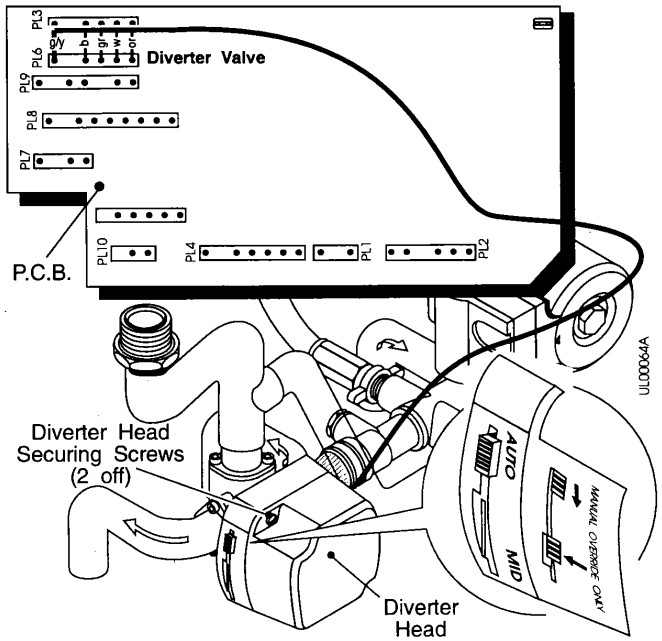


Fig. 46

## 6.7 Pressure Gauge

1. Gain General Access - See Section 6.1, Paragraph 1.
2. Drain the boiler by removing the pressure gauge connection from the water manifold.
   **Note:** When the boiler is drained, filled or vented, the manual lever on the left hand side of the diverter valve must be moved to the 'MID' (manual override) position. Return it to its original position after the system has been filled and vented.
3. Compress the clips on the body of the gauge and push it out of the panel, withdrawing the capillary.
4. Fit the new pressure gauge and connect the sensor to the safety valve using a new sealing washer.
5. Fill the system and vent the boiler as described in Section 2.13. Check the pressure gauge connection at the water manifold for water soundness.
6. Re-assemble in reverse order.

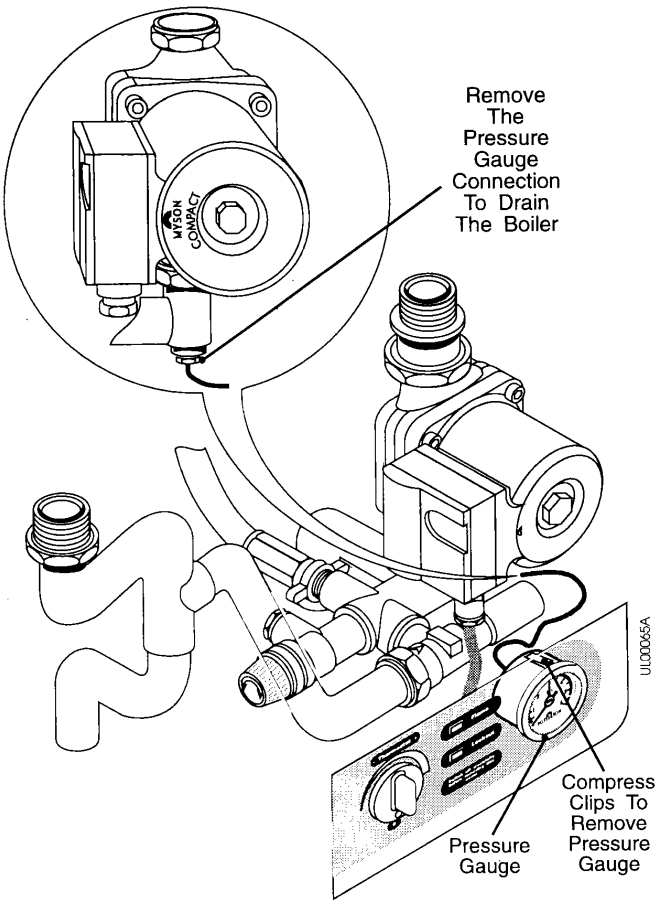


Fig. 47

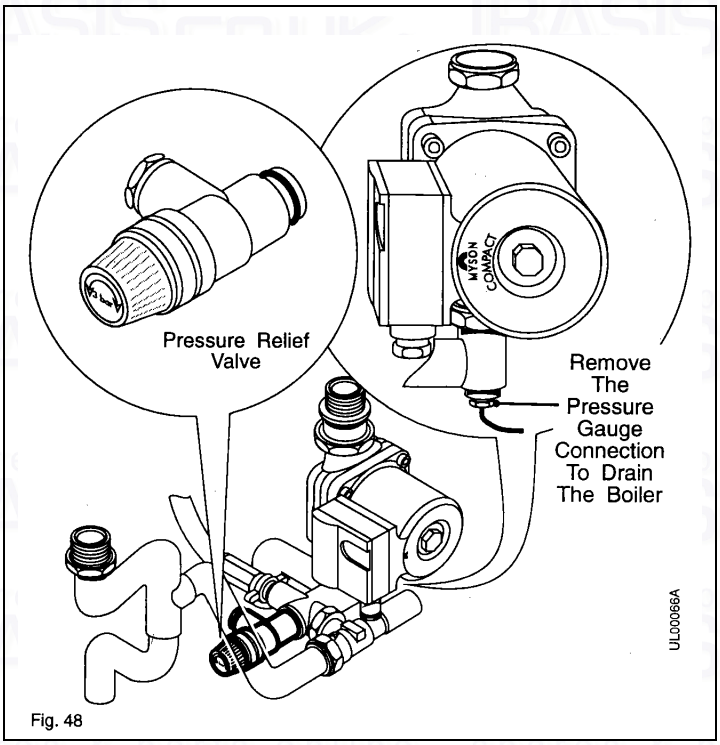

Fig. 48

## 6.8 Pressure Relief Valve

1. Gain General Access - See Section 6.1, Paragraph 1.
2. Drain the system by removing the pressure gauge connection from the water manifold.
   **Note:** When the system is drained, filled or vented, the manual lever on the left hand side of the diverter valve must be moved to the 'MID' (manual override) position. Return it to its original position after the system has been filled and vented.
3. Disconnect the compression joint securing the discharge pipe to the valve.
4. Remove the two grub screws (top & bottom) that secure the valve to the water manifold then remove the valve.
5. Fit the new valve and a new 'O' ring. Use a soap solution as a lubricant.
6. Re-assemble in reverse order.

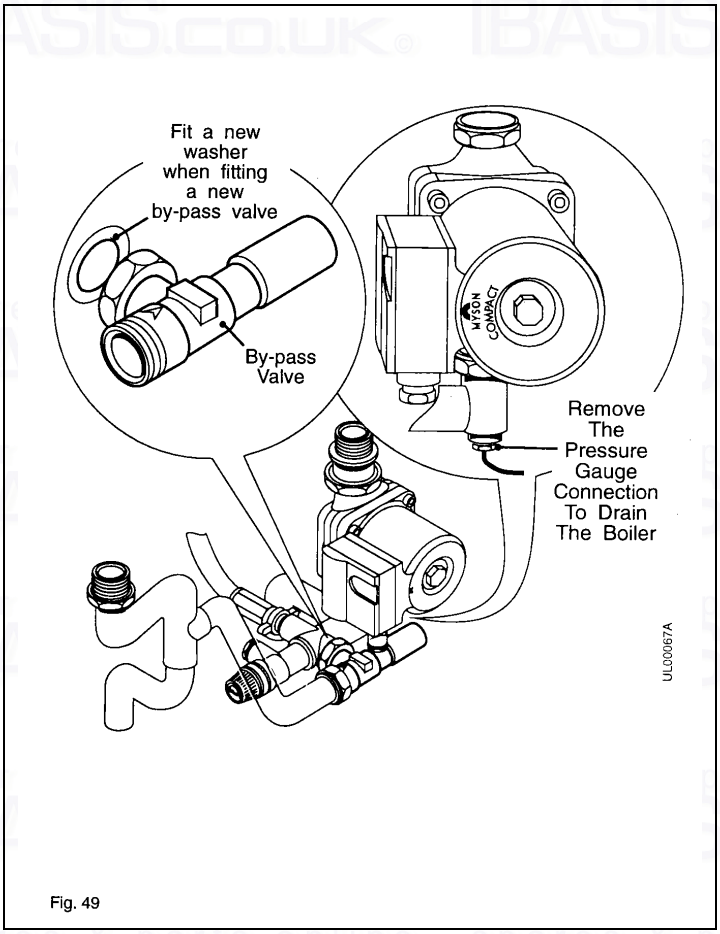

Fig. 49

## 6.9 By-Pass Valve

1. Gain General Access - See Section 6.1, Paragraph 1.
2. Drain the system by removing the pressure gauge connection from the water manifold.
   **Note:** When the system is drained, filled or vented, the manual lever on the left hand side of the diverter valve must be moved to the 'MID' (manual override) position. Return it to its original position after the system has been filled and vented.
3. Release the two unions securing the valve to the water manifold and by-pass pipe. Remove the valve.
4. Fit the new valve, use a new washer at the connection with the water manifold and check the condition of the olive at the connection with the by-pass pipe.
   **Note:** The spare by-pass valve is pre-set and **must not** be adjusted.
5. Fill and vent the boiler as described in Section 2.13. Check the unions for water soundness.
6. Re-assemble in reverse order.

## 6.10 Ignition Circuit Board

1. Gain General Access - See Section 6.1, Paragraph 1.
2. Disconnect all wiring harness connectors and the electrode lead from the board. The programmer socket is released by gently compressing the mounting clip with a screwdriver, also release the earth lead from the earth post.
3. Carefully remove the circuit board from the mounting pillars and replace with a new one.
4. Reconnect the wiring harness connectors and the electrode lead.
5. Re-assemble in reverse order.

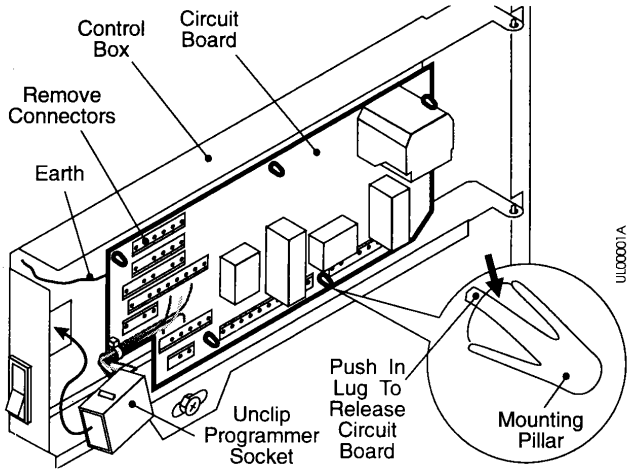

Fig. 50

## 6.11 Reset Button/Neons

**Note:** The neons and the reset button are one assembly and must be replaced complete.

1. Remove the bottom cover and facia assembly - See Section 6.1, Paragraphs a. & d. Removal of the air pressure switch (Section 6.5) will allow the reset button to be slid out to the left.
2. Disconnect the harness from the circuit board.
3. Compress the clips on the side and pull the reset button through the chassis.
4. Re-assemble in reverse order.

## 6.12 Potterton Internal Ultra 2 Programmer (If Fitted)

1. Gain General Access - See Section 6.1, Paragraph 1.
2. Note how it fits and unplug the programmer wiring harness plug from the back of the control box.
3. Remove the two screws that secure the retaining bracket over the programmer and onto the facia. Remove the bracket.
4. Fit the new programmer to the back of the control panel, position the bracket and secure using the two screws previously removed.
5. Connect the programmer wiring harness plug into the rear of the control box.
6. Re-assemble in reverse order.
7. Switch on the electricity supply, refer to the Programmer instructions and set the timer and programmes.

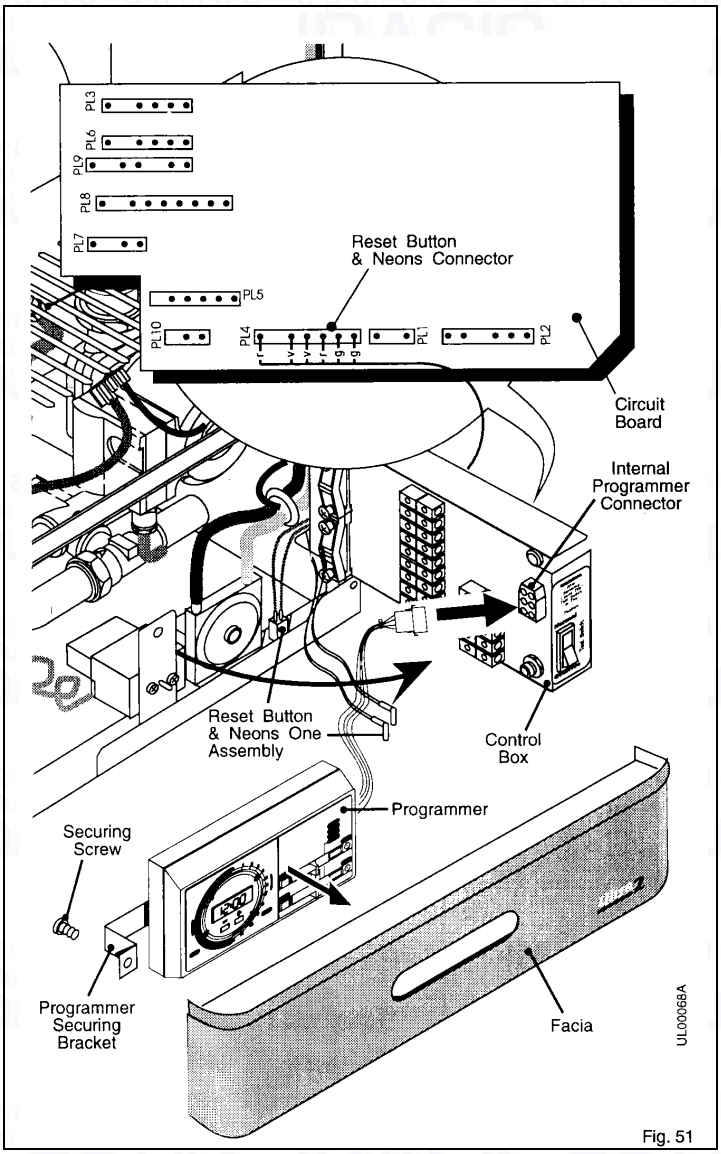

Fig. 51

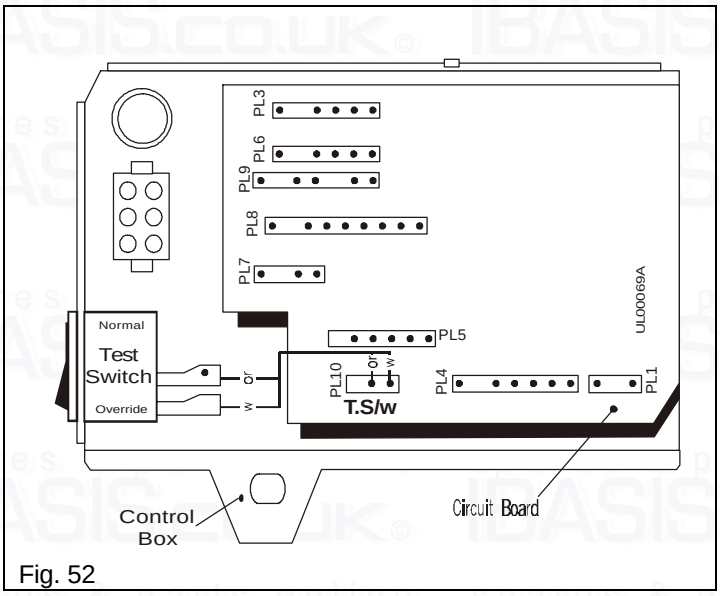


Fig. 52

## 6.13 Test Switch

1. Gain General Access - See Section 6.1, Paragraph 1.
2. Disconnect the two electrical (spade) connectors from the switch.
3. Note which way the switch is fitted, compress the clips on the switch body and push it out of the control box.
4. Fit the new switch as shown with the spade connectors to the bottom.
5. Re-assemble in reverse order.

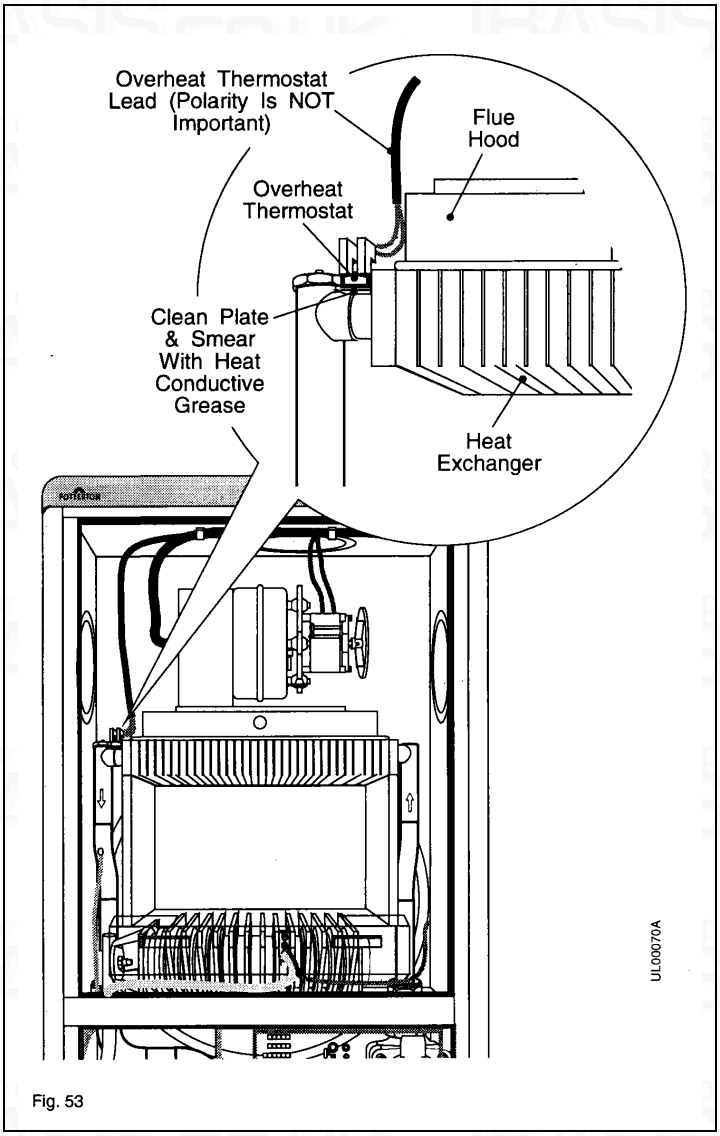


Fig. 53

## 6.14 Overheat Cut-Off Device

1. Gain General Access - See Section 6.1 complete.
2. Disconnect the overheat thermostat leads.
3. Remove the two screws securing the overheat thermostat to the heat exchanger.
4. Ensure that the mounting plate is clean, smear some heat conductive grease onto the plate and secure the new thermostat to the heat exchanger.
5. Reconnect the leads (the polarity is not important).
6. Re-assemble in reverse order.

## 6.15 Electrode Lead/Electrode

**Spark Electrode.**

1. Gain General Access - See Section 6.1 complete.
2. Disconnect the electrode lead from the spark electrode.
3. Undo the securing nut and pull the electrode from the pilot burner.
4. Fit the new spark electrode to the pilot burner and secure using the nut.
   Check that the spark gap is 3 to 4mm.
5. Connect the electrode lead to the spark electrode.
6. Re-assemble in reverse order.

**Electrode lead.**

1. Gain General Access - See Section 6.1 complete.
2. Disconnect the electrode lead from the spark electrode.
3. Disconnect the electrode lead from the ignition circuit board.
4. Carefully pull the electrode lead out through the white silicone grommets in the right side of the chassis.
5. Carefully feed the new lead back through the white silicone grommet.
6. Ensure the lead goes around the rear of the control box and in from the right hand side.
7. Re-assemble in reverse order.

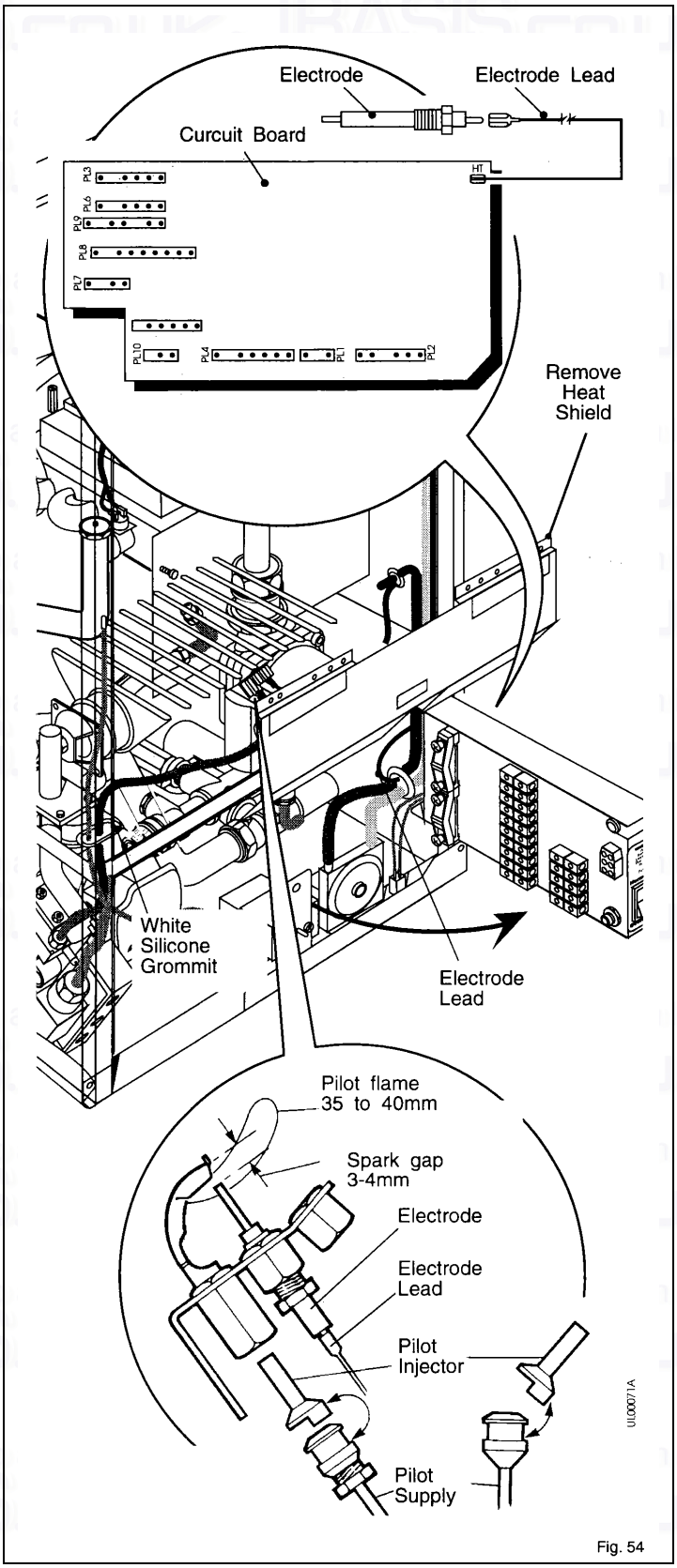


Fig. 54

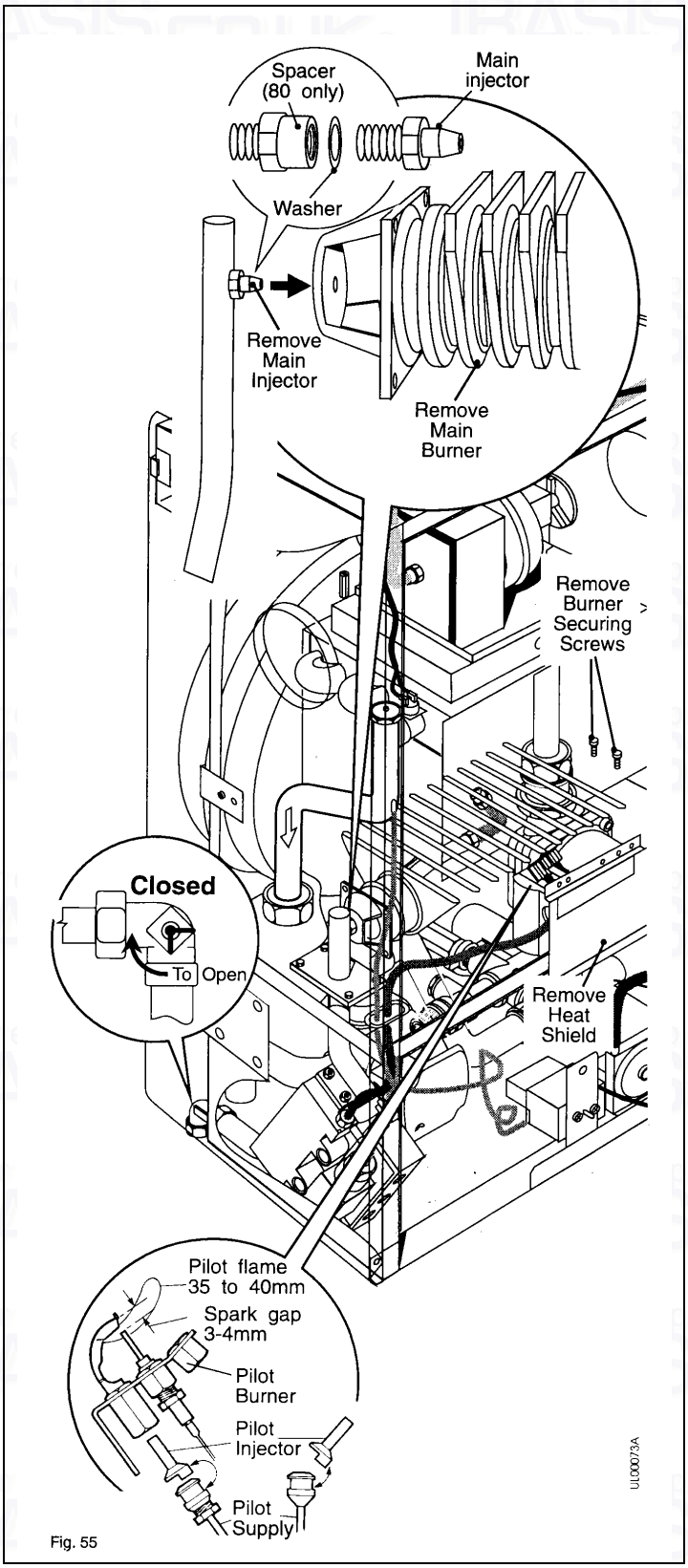


Fig. 55

## 6.16 Main Burner, Pilot Burner, Main Injector, Pilot Injector

**Pilot Injector**

1. Gain General Access - See Section 6.1 complete.
2. Pull the electrode lead off the electrode.
3. Undo the pilot supply pipe tubing nut at the pilot burner and gas valve. Remove the pilot injector.

**Main Burner**

Follow steps 1 to 3 plus:-

4. Remove the two screws securing the right hand end of the burner to the chassis. Slide the burner to the right to remove it from the main injector and withdraw the burner.

**Pilot Burner**

Follow steps 1 to 4 plus:-

5. Remove the two screws securing the pilot burner to the main burner.

**Main Injector**

Follow steps 1 to 4 plus:-

6. Unscrew the main injector from the burner manifold and remove the sealing washer.

   On re-assembly of the main injector, use a suitable sealing compound on the threads and also use a new sealing washer.

   On re-assembly of the pilot injector, position the injector over the end of the pilot supply pipe and carefully insert into the pilot burner.

   On re-assembly of the spark electrode check the spark gap. It should be 3 to 4mm.

7. Re-assemble in reverse order.

## 6.17 Fan

1. Gain General Access - See Section 6.1 complete.
2. Disconnect the overheat thermostat leads.
3. Remove the two screws securing the fan assembly to the flue hood. Carefully slide the fan assembly away from the flue to disengage the flue tube sleeve from the flue. Withdraw the fan assembly, disconnecting the fan motor leads and pressure switch tube.

**Note:** If a Vertex or Vertical Flue is fitted, slide the flue tube sleeve up into the flue to disengage it from the fan outlet.

4. Remove the four screws securing the fan to the diverter and remove the fan. Remove the flue tube sleeve from the old fan. Ensure that the 'O' ring is in position on the fan outlet, then fit the flue tube sleeve over the fan outlet and push it fully home. Secure the new fan to the diverter with the four screws previously removed.
5. Place the fan assembly on top of the flue hood with the outlet facing towards the flue. Re-connect the two violet leads (polarity not important) to the fan motor and the air pressure tube to the fan.
6. With the fan assembly resting on the flue hood engage the flue tube sleeve on the fan outlet into the inner tube of the flue.Ensure that the base of the fan assembly is located under the returns at the rear of the flue hood. (For side exit flue locate the base of the fan assembly under the returns first then slide the fan across into the flue).

**Note:** If a Vertex or Vertical Flue is fitted, slide the flue tube sleeve down out of the flue and over the fan outlet.

7. Secure the front of the fan assembly to the flue hood with the two screws previously removed.
8. Re-assemble the boiler in reverse order.

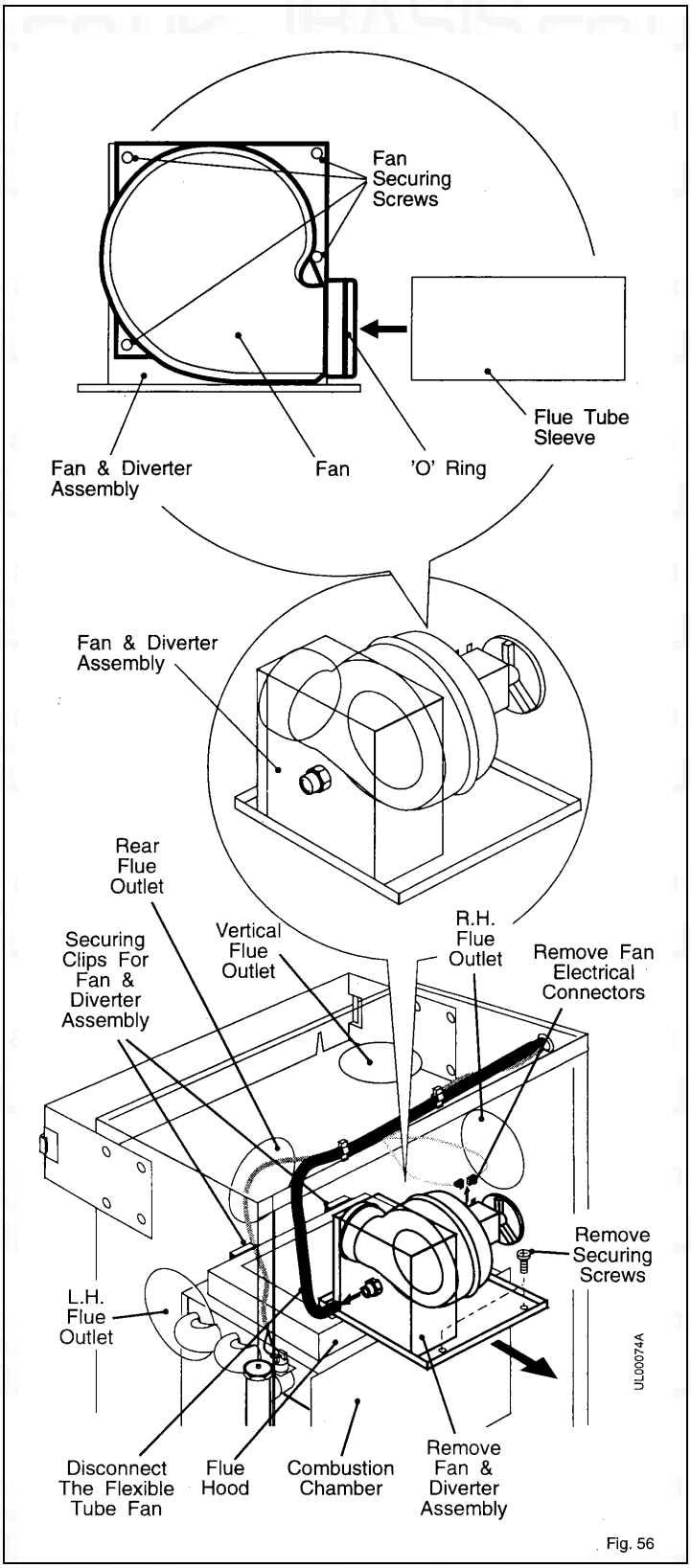

Fig. 56

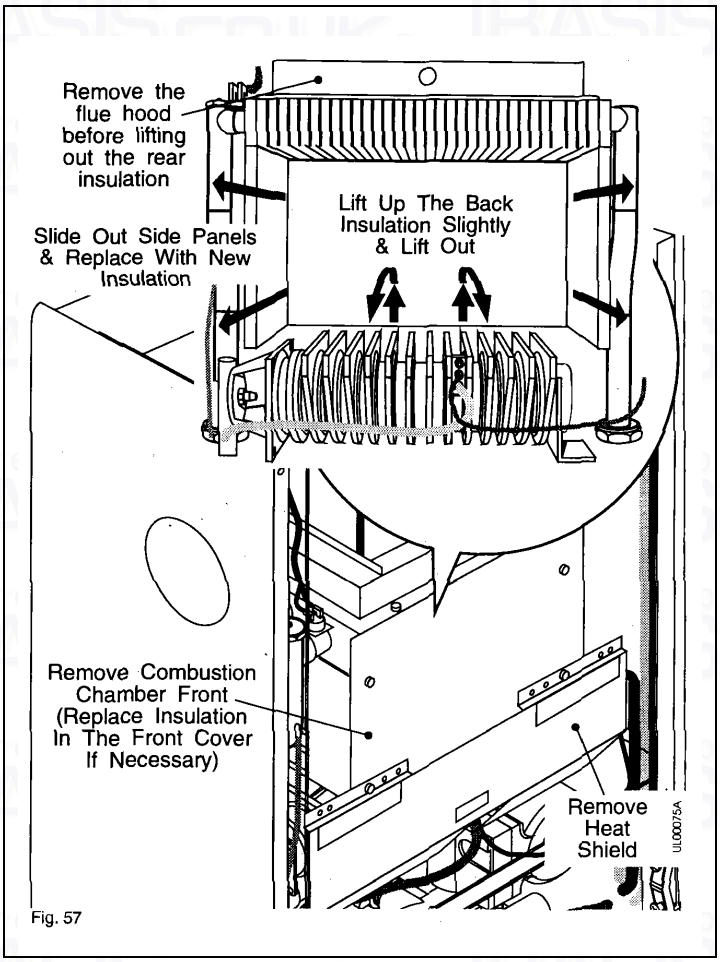

Fig. 57

## 6.18 Combustion Chamber Insulation Panels

1. Gain General Access - See Section 6.1 complete.
2. Remove the fan/diverter assembly - see Section 6.17.
3. Remove the four remaining screws securing the combustion chamber insulation cover and remove the cover.

   **30-60 Models:** Remove the two long screws at the back & slide out the flue hood if the rear insulation needs to be removed.

   **80 Model:** Remove 2 screws each side.

4. Slide out the damaged insulation panel(s) and carefully replace with new one(s).
   The rear panel should be lifted up a few mm then pulled forwards out of its bottom locating channel.
   **Note:** For some models it may be necessary to remove the burner first - refer to Section 6.16.
5. Re-assemble in reverse order.

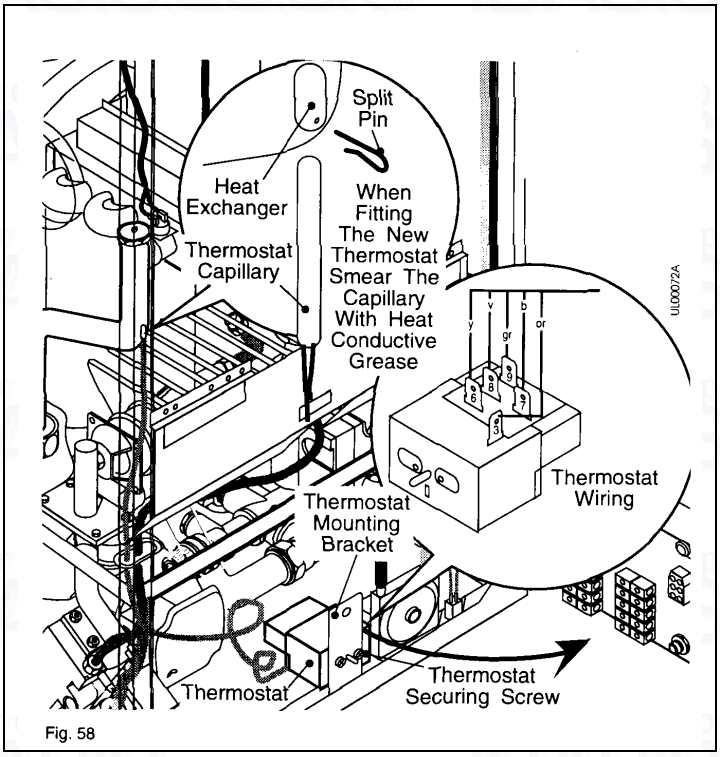

Fig. 58

## 6.19 Boiler Thermostat

1. Gain General Access - See Section 6.1 complete.
2. Remove the two screws securing the thermostat to its mounting bracket.
3. Withdraw the boiler thermostat and disconnect the electrical plugs.
4. Remove the split pin and withdraw the thermostat capillary from the flow pipe (left hand side of the boiler).
5. Re-assemble in reverse order. Ensure the electrical plugs are connected as shown and that the thermostat capillary routed through the cable tie (see Fig 40 / 41) and is smeared with heat conductive grease. Ensure that the split pin is re-fitted.

## 6.20 Heat Exchanger

**Note:** When removing the heat exchanger it will discharge some remaining water, suitably protect the electronics.

1. Gain General Access - See Section 6.1 complete.
   Remove the Main Burner -
   See Section 6.16
   Remove the Fan/Diverter Assembly -
   See Section 6.17
   Remove the flue hood by taking out two long screws at the back & the two screws at the front (on 80 models two screws each side). Lift out the flue hood. See Fig.40, Page 37.

2. Drain the boiler by removing the pressure gauge connection from the water manifold.

**Note:** When the boiler is drained, filled or vented, the manual lever on the left hand side of the diverter valve must be moved to the 'MID' (manual override) position. Return it to its original position after the system has been filled and vented.

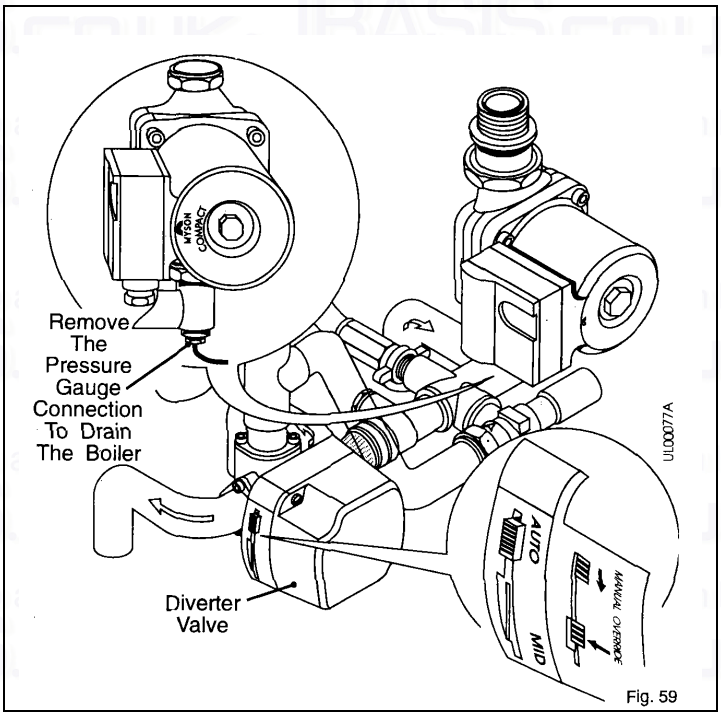

Fig. 59

3. Remove the two screws securing the overheat thermostat to the heat exchanger.

4. Undo the two tubing nuts at the bottom of the heat exchanger and remove it from the boiler - lift it up slightly to disengage the pipes and to clear the combustion chamber then withdraw it forwards.

5. Fit the new heat exchanger. Refit the overheat thermostat (polarity of wires not important) and secure in position with the two screws previously removed.

6. Fill the system and vent the boiler as described in Section 2.13. Check the heat exchanger connections for water soundness.

7. Re-assemble the remaining parts in reverse order

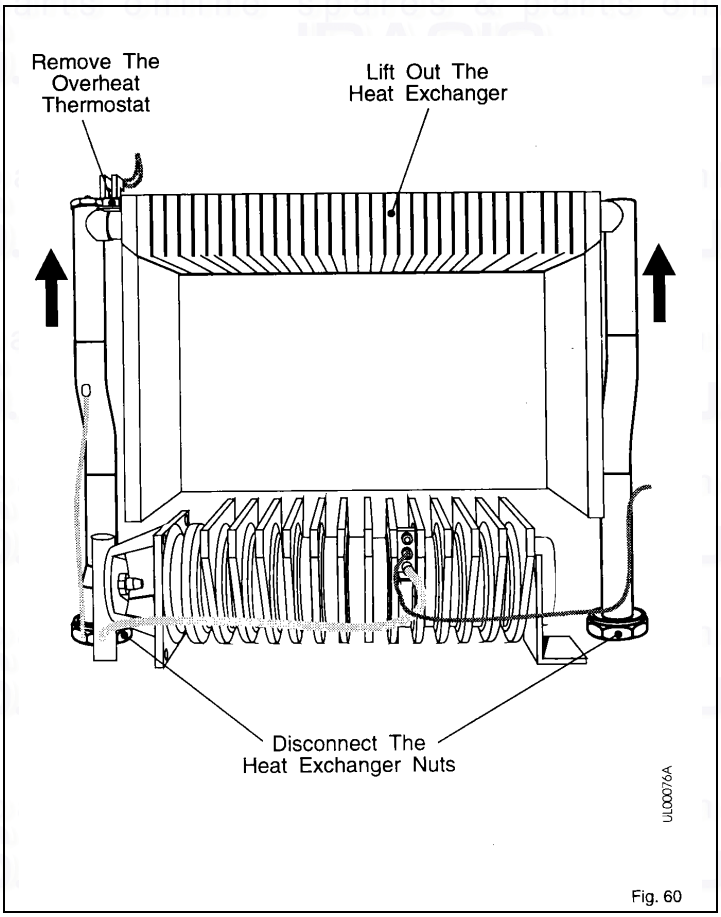

Fig. 60

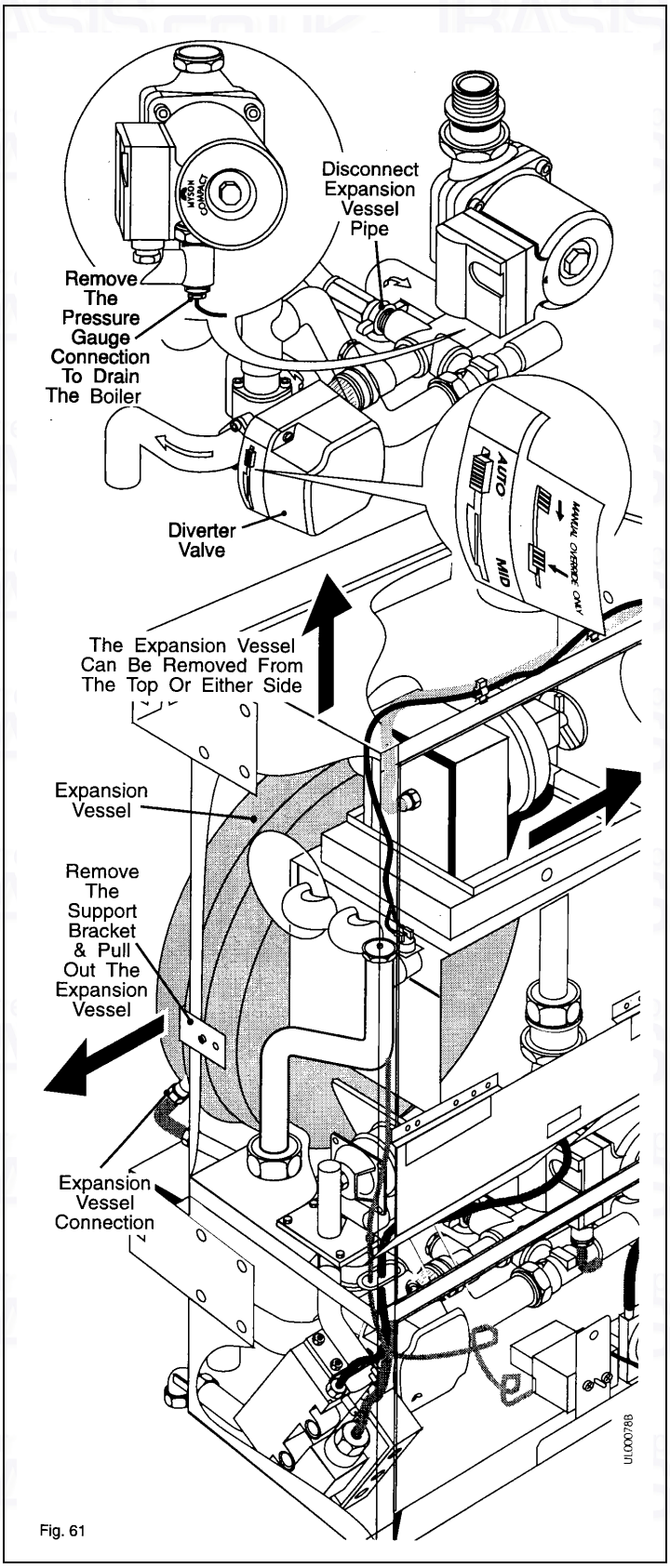


Fig. 61

## 6.21 Expansion Vessel

Depending on ease of access, the expansion vessel can be removed from the left, right or from above the boiler. Alternatively, the boiler can be taken off the wall and the vessel removed from the boiler.

***All***

1. Gain General Access - See Section 6.1 complete.
2. Drain the boiler by removing the pressure gauge connection from the water manifold.
   Note: When the boiler is drained filled or vented, the manual lever on the left hand side of the diverter valve must be moved to the 'MID' (manual override) position. Return it to its original position after the system has been filled and vented.
3. Disconnect the flexible pipe from the water manifold.

***Side Removal*** - Remove the white case side - two screws.

***Top Removal*** - If the flue exits out the rear it will need disconnecting to allow access.

***Boiler off wall*** - Close all service cocks - water and gas (Section 2.12 & 2.13), isolate electricity supply (Section 2.10), remove fan assembly (Section 6.17). Disconnect the water and gas service cocks, disconnect the electricity supply and lift the boiler off the wall.

4. Remove the vessel securing bracket(s).
5. Remove the vessel.
6. Position the new vessel in the frame with the connection point down and to the right.
7. Fill the system and vent the boiler as described in Section 2.13. Check the expansion vessel connection for water soundness.
8. Re-assemble the boiler in reverse order.

# 7. Wiring Diagrams - Page 51

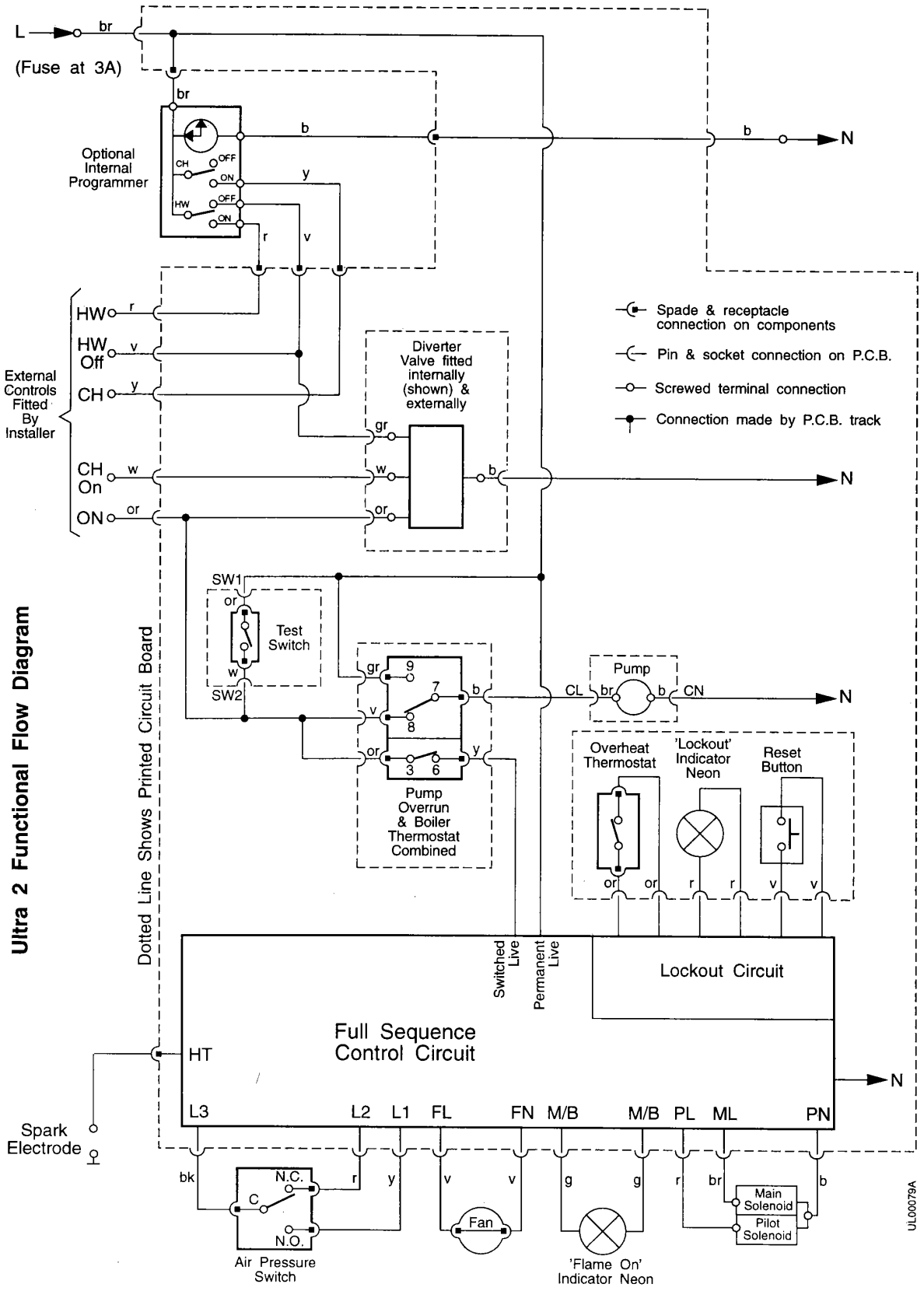

# Wiring Diagrams - Page 52

## Ultra 2Dv

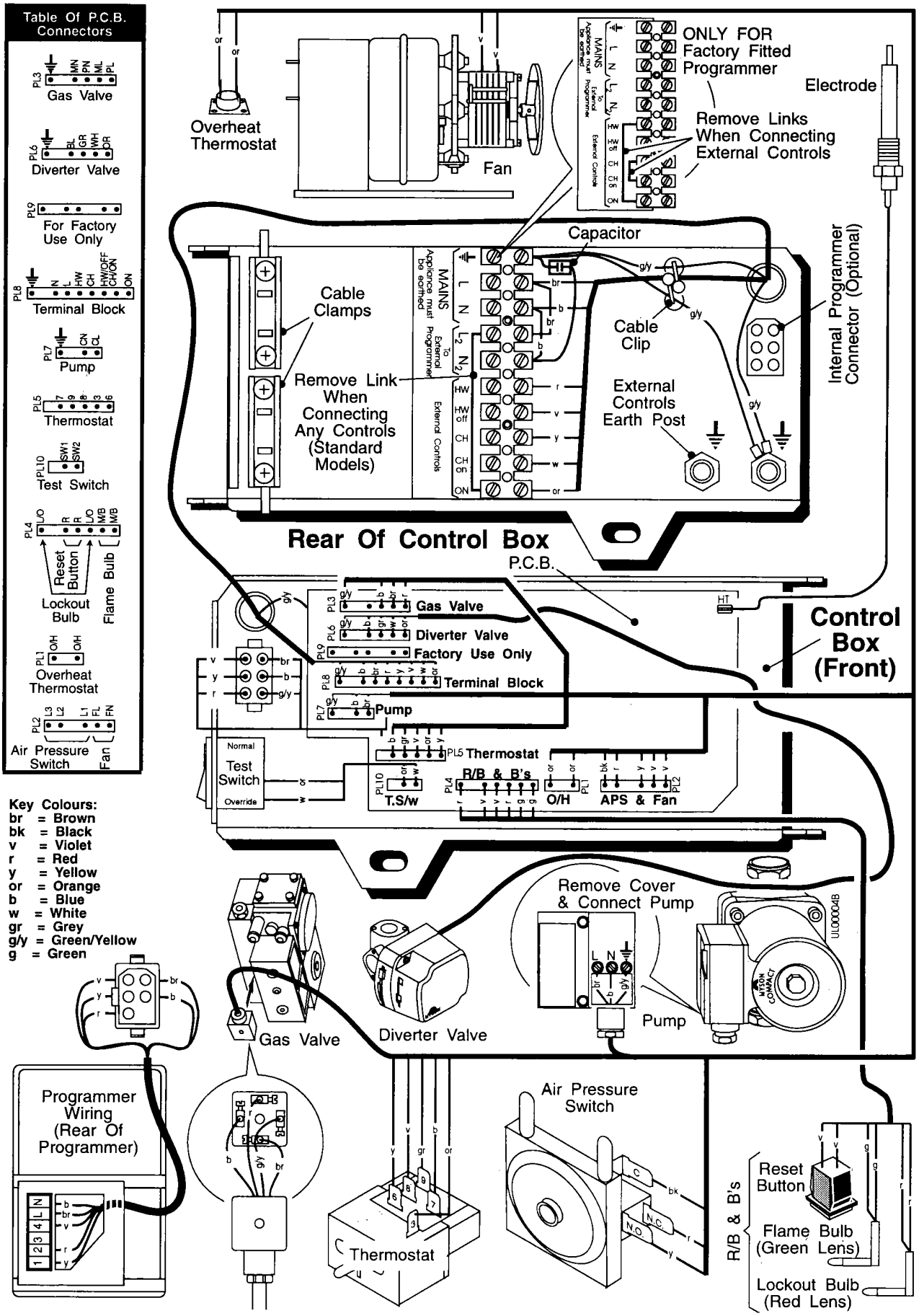

## Ultra 2

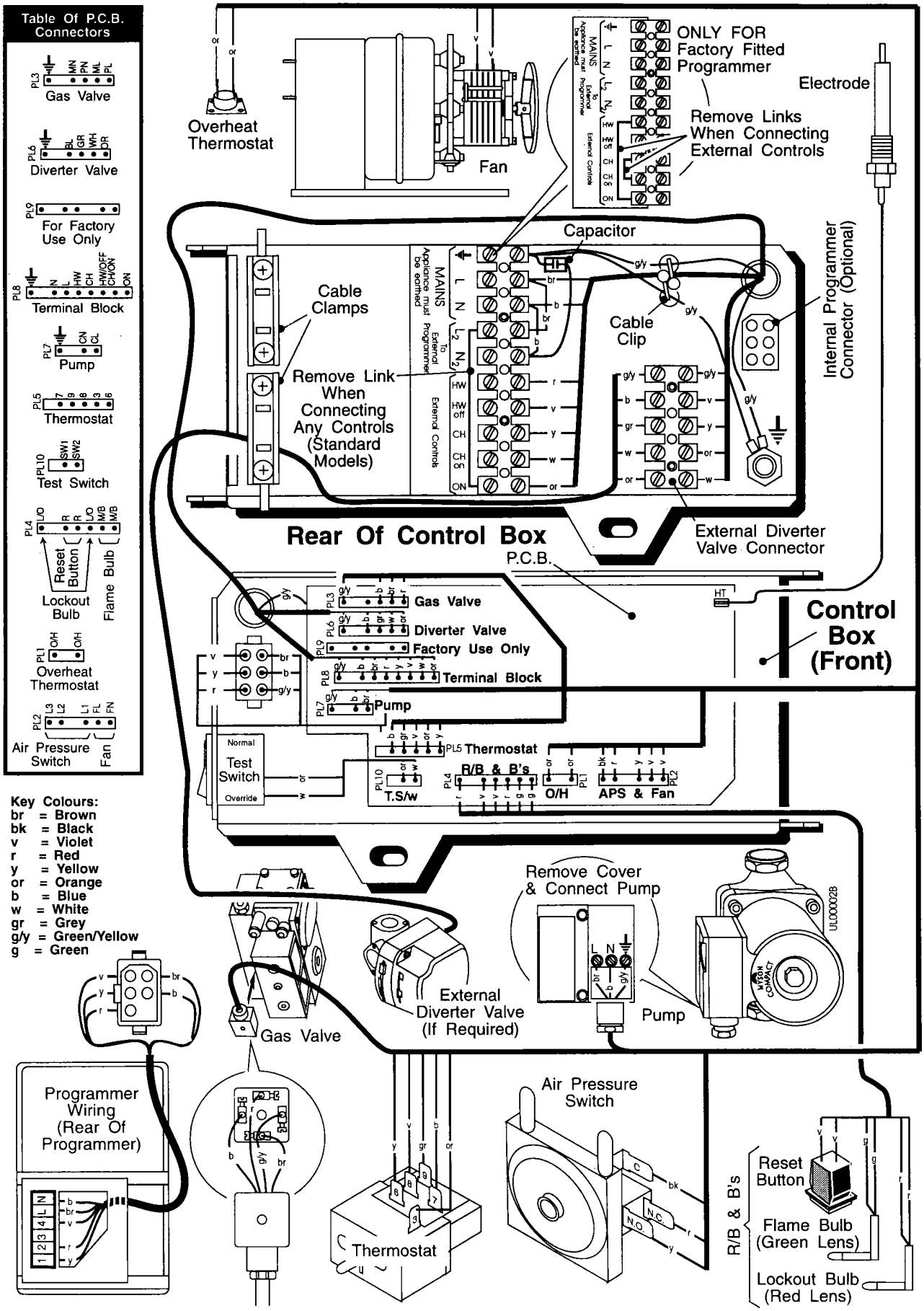
Table Of P.C.B. Connectors
PL3 MN PN ML PL
Gas Valve
PL6 BL GR WH DR
Diverter Valve
PL9
For Factory Use Only
PL8 N L HW CH HW/OFF CH/ON ON
Terminal Block
PL7 CN CL
Pump
PL5 7 9 8 3 6
Thermostat
PL10 SW1 SW2
Test Switch
PL4 L/O R R L/O MB MB
Reset Button
Lockout Bulb
Flame Bulb
PL1 O/H O/H
Overheat Thermostat
PL2 L3 L2 L1 FL FN
Air Pressure Switch
Fan
Key Colours:
br = Brown
bk = Black
v = Violet
r = Red
y = Yellow
or = Orange
b = Blue
w = White
gr = Grey
g/y = Green/Yellow
g = Green
Overheat Thermostat
Fan
ONLY FOR Factory Fitted Programmer
Electrode
Remove Links When Connecting External Controls
Capacitor
Cable Clamps
Cable Clip
Internal Programmer Connector (Optional)
Remove Link When Connecting Any Controls (Standard Models)
MAINS
Appliance must be earthed
To External Programmer
External Controls
Rear Of Control Box
External Diverter Valve Connector
P.C.B.
HT
Control Box (Front)
Gas Valve
Diverter Valve
Factory Use Only
Terminal Block
Pump
Thermostat
Normal
Test Switch
Override
T.S/w
R/B & B's
O/H
APS & Fan
Remove Cover & Connect Pump
UL00002B
External Diverter Valve (If Required)
Pump
Gas Valve
Programmer Wiring (Rear Of Programmer)
Air Pressure Switch
Thermostat
Reset Button
Flame Bulb (Green Lens)
Lockout Bulb (Red Lens)
R/B & B's

# . Fault Finding Guide - Page 54

Preliminary electrical system checks i.e. Earth Continuity, Short Circuit, Polarity and Resistance to Earth are the first electrical checks to be carried out during a fault finding procedure. On completion of the service / fault finding task which has required the breaking and remaking of electrical connections, then the checks - Earth Continuity, Short Circuit, Polarity and Resistance to earth - must be repeated.

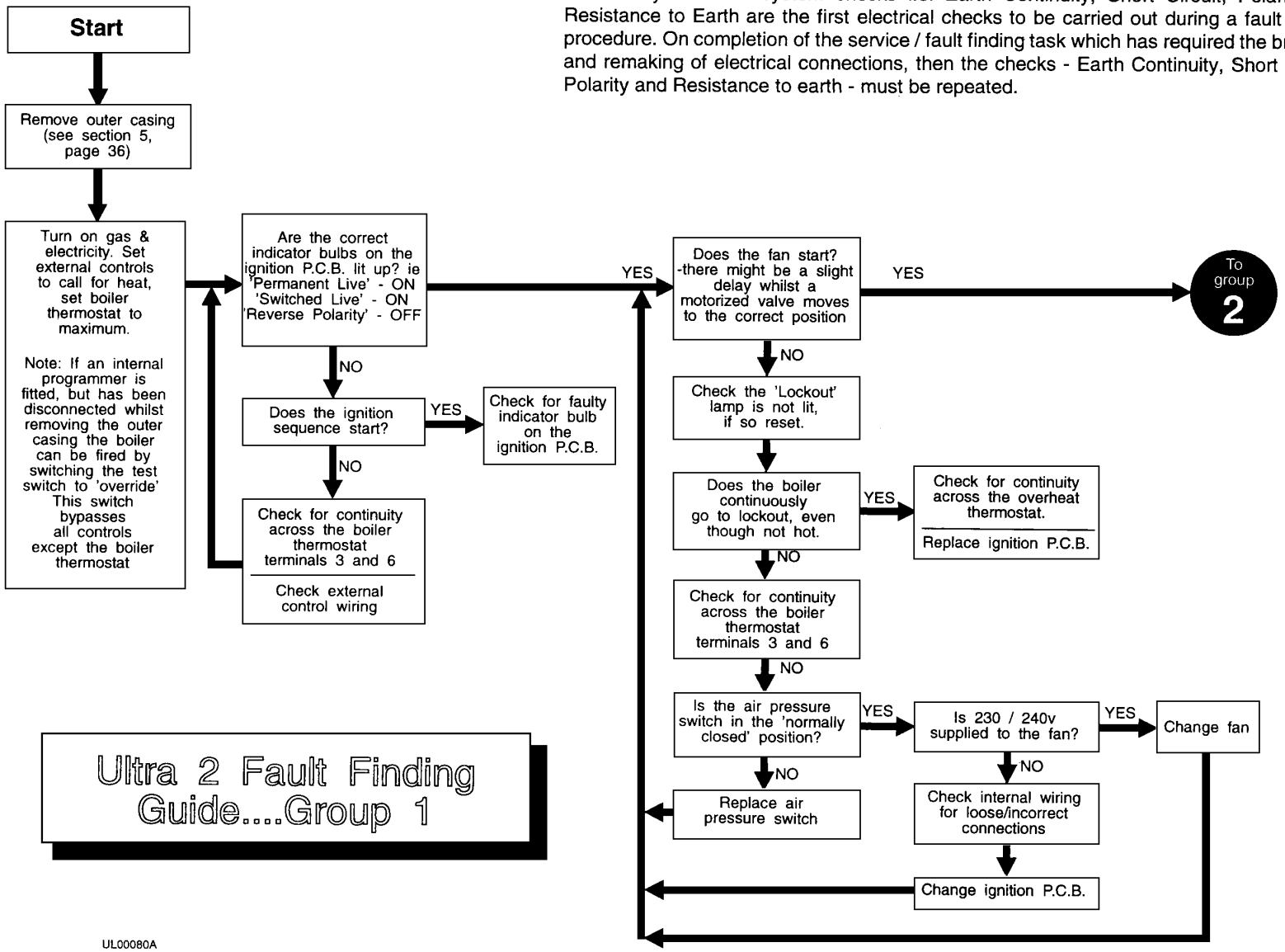

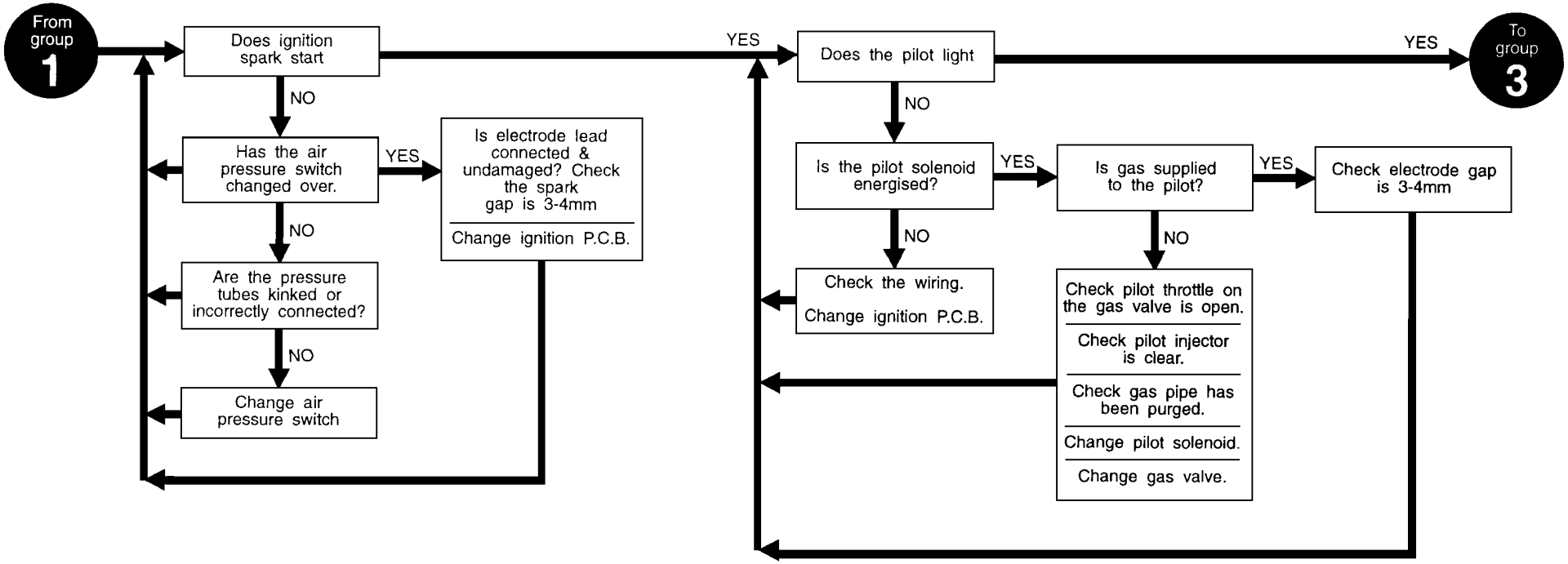


# Ultra 2 Fault Finding Guide....Group 2

UL00081A

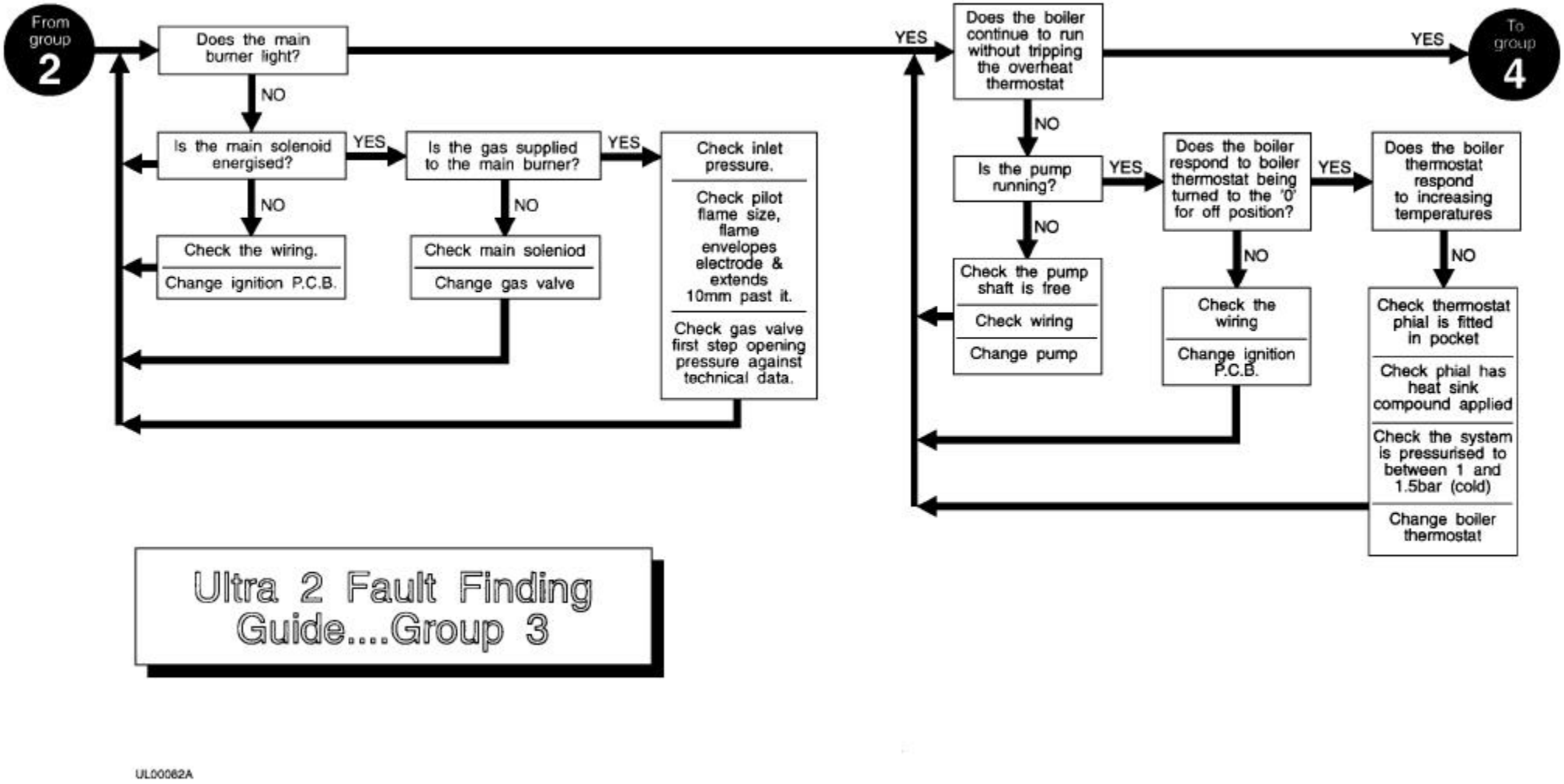
From group 2
Does the main burner light?
YES
NO
Is the main solenoid energised?
YES
NO
Check the wiring.
Change ignition P.C.B.
Is the gas supplied to the main burner?
YES
NO
Check main soleniod
Change gas valve
Check inlet pressure.
Check pilot flame size, flame envelopes electrode & extends 10mm past it.
Check gas valve first step opening pressure against technical data.
Does the boiler continue to run without tripping the overheat thermostat
YES
To group 4
NO
Is the pump running?
YES
NO
Check the pump shaft is free
Check wiring
Change pump
Does the boiler respond to boiler thermostat being turned to the '0' for off position?
YES
NO
Check the wiring
Change ignition P.C.B.
Does the boiler thermostat respond to increasing temperatures
NO
Check thermostat phial is fitted in pocket
Check phial has heat sink compound applied
Check the system is pressurised to between 1 and 1.5bar (cold)
Change boiler thermostat
Ultra 2 Fault Finding Guide....Group 3
UL00062A

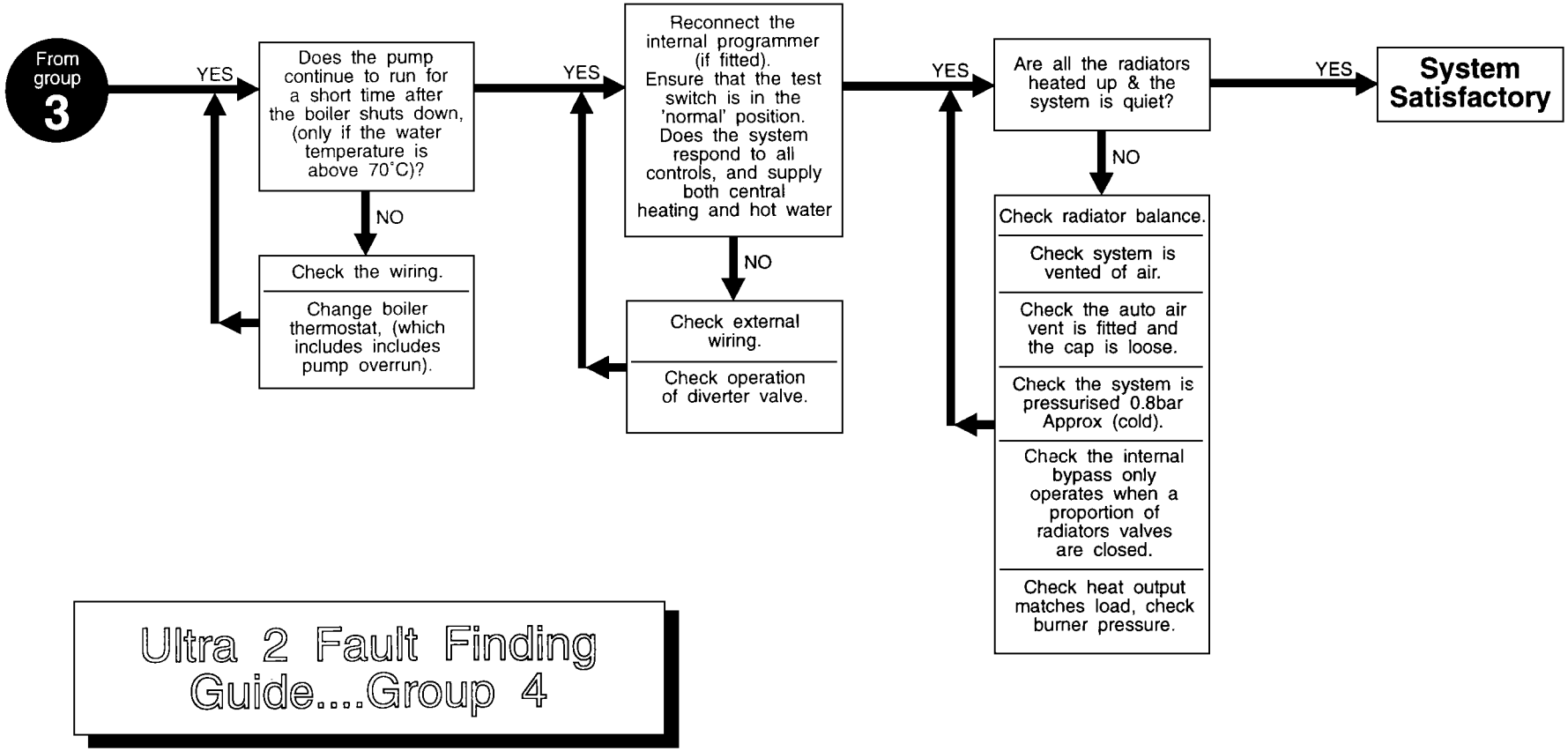
From group 3
YES
Does the pump continue to run for a short time after the boiler shuts down, (only if the water temperature is above 70˚C)?
NO
Check the wiring.
Change boiler thermostat, (which includes includes pump overrun).
YES
Reconnect the internal programmer (if fitted). Ensure that the test switch is in the 'normal' position. Does the system respond to all controls, and supply both central heating and hot water
NO
Check external wiring.
Check operation of diverter valve.
YES
Are all the radiators heated up & the system is quiet?
NO
Check radiator balance.
Check system is vented of air.
Check the auto air vent is fitted and the cap is loose.
Check the system is pressurised 0.8bar Approx (cold).
Check the internal bypass only operates when a proportion of radiators valves are closed.
Check heat output matches load, check burner pressure.
YES
System Satisfactory
Ultra 2 Fault Finding Guide....Group 4

UL00083A

# 9. Short List Of Spare Parts - Page 58

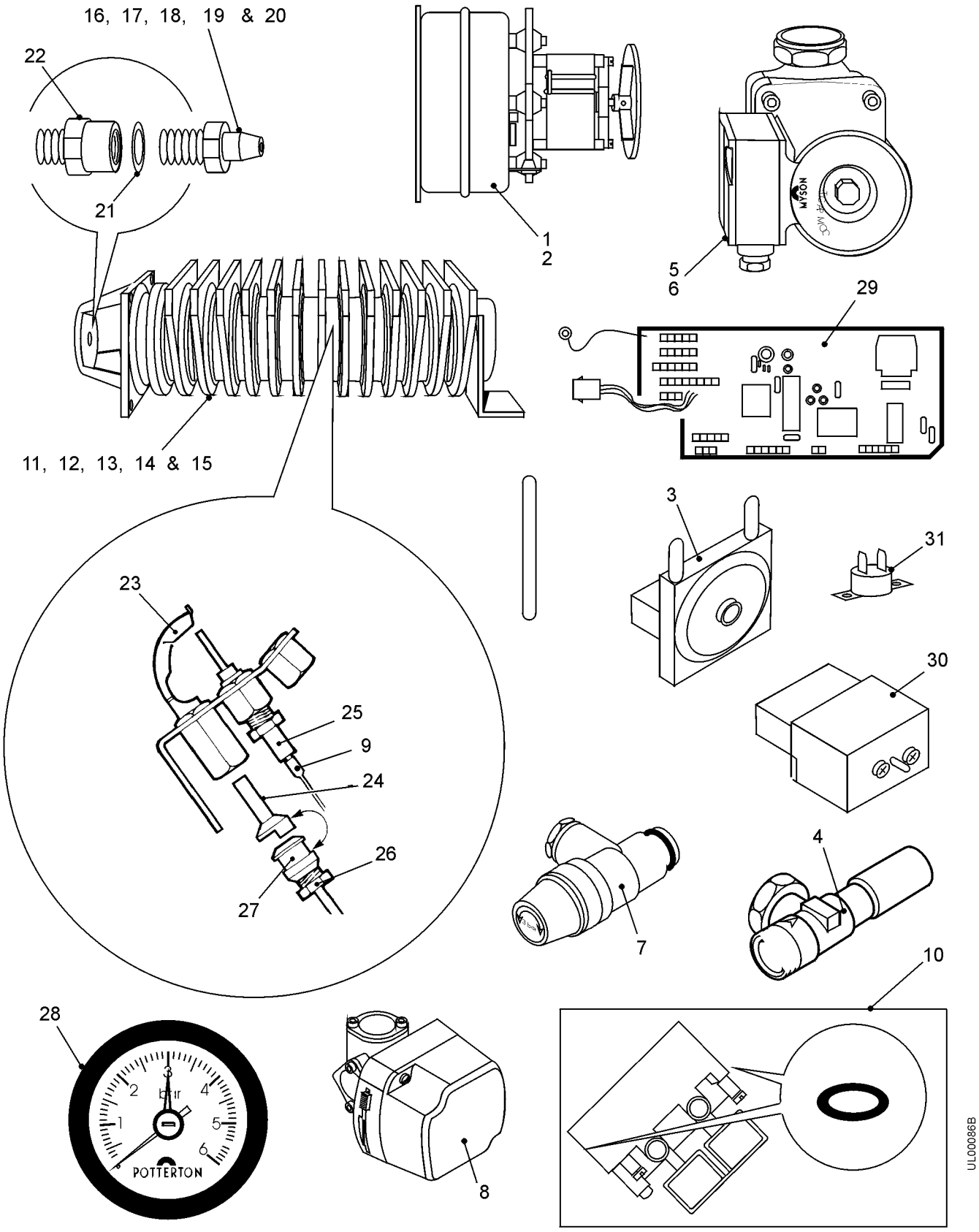

## Short List Spare Parts - Page 59

| Drg. Ref. | G.C. No. | Description | Qty | Part No. |
|---|---|---|---|---|
| 1 | 289 911 | Fan Assembly - 30, 40 & 50 Models | 1 | 405/0792 |
| 2 | 289 912 | Fan Assembly - 60, 80 Models | 1 | 405/0730 |
| 3 | 379 789 | Pressure Switch (0.5bar Setting) | 1 | 642223 |
| 4 | 379 983 | Bypass Valve 28mm | 1 | 405/0492 |
| 5 | 289 860 | Pump Kit Myson CP51 - 30, 40, 50 Models | 1 | 929031 |
| 6 | 289 861 | Pump Kit Myson CP61 - 60, 80 Models | 1 | 929032 |
| 7 | 379 398 | Pressure Relief Valve | 1 | 929647 |
| 8 | 379 911 | Diverter Valve (Dv Range Only) | 1 | 405/0484 |
| 9 | 289 185 | Electrode Lead | 1 | 929009 |
| 10 | 289 334 | Gas Control Valve Kit | 1 | 929337 |
| 11 | 289 941 | Burner - 5 Blade 30 Models Only | 1 | 405/0422 |
| 12 | 289 942 | Burner - 7 Blade 40 Models Only | 1 | 405/0423 |
| 13 | 289 943 | Burner - 9 Blade 50 Models Only | 1 | 405/0424 |
| 14 | 127 221 | Burner - 11 Blade 60 Models Only | 1 | 929063 |
| 15 | 127 222 | Burner - 12 Blade 80 Models Only | 1 | 929064 |
| 16 | 398 379 | Burner Injector, Bray 23.800 - 30 Models Only | 1 | 929002 |
| 17 | 398 380 | Burner Injector, Bray 23.1100 - 40 Models Only | 1 | 929003 |
| 18 | 398 475 | Burner Injector, Bray 23.1350 - 50 Models Only | 1 | 929004 |
| 19 | 389 586 | Burner Injector, Bray 23.1600 - 60 Models Only | 1 | 405/0623 |
| 20 | 398 381 | Burner Injector, Bray 23.2400 - 80 Models Only | 1 | 929006 |
| 21 | 323 468 | Washer - Injector | 1 | 929230 |
| 22 | 289 944 | Spacer - Injector 80 Model Only | 1 | 929373 |
| 23 | 381 865 | Pilot Burner | 1 | 929047 |
| 24 | 386 673 | Pilot Injector | 1 | 929001 |
| 25 | 379 909 | Electrode | 1 | 68202113 |
| 26 | 386 771 | Tubing Nut, 4mm | 1 | 402948 |
| 27 | 386 770 | Piolet Olive, 4mm | 1 | 402949 |
| 28 | 379 912 | Pressure Gauge | 1 | 405/0517 |
| 29 | 289 945 | Ignition P.C.B. c/w socket | 1 | 405/0485 |
| 30 | 379 911 | Boiler Thermostat c/w Nut & Washer - C77-P0145 | 1 | 402S3678 |
| 31 | 395 881 | Overheat Thermostat - 36TXE21 - 12192 (Grey Spot) | 1 | 402S1695 |

When ordering spare parts, always quote the boiler model and serial number, shown on users serial number label.

Back Page