POTTERTON

Installation & Servicing Manual

for the
Ultra Dv range of wall mounted
fan assisted balanced flue gas boilers

G.C. Appliance No's.

Ultra Dv 30	41 494 73
Ultra Dv 40	41 494 74
Ultra Dv 50	41 494 75
Ultra Dv 60	41 494 76
Ultra Dv 80	41 494 77

IMPORTANT
FOR USE WITH NATURAL GAS ONLY.
Read these instructions thoroughly before working on the boiler.
Leave these instructions with the User for use on future calls.

spares & parts online IBASIS.CO.UK

LIST OF CONTENTS

1. TECHNICAL DATA 4
2. GENERAL 5
2.1 Introduction 5
2.2 Regulatory Requirements 5
2.3 Delivery & Kits Available 5
2.4 Gas Supply 5
2.5 Electricity Supply 5
2.6 Air Supply 6
2.7 Flue System 6
2.8 Location of Boiler 6
2.9 Boiler Dimensions and Gas Connection 8
2.10 Water System Schematics 8
2.11 Sealed System Requirements 9
3. INSTALLATION 10
3.1 Unpack the Boiler 10
3.2 Unpack the Flue Terminal 10
3.3 Rear Flue - Prepare the Wall 11
3.4 Rear Flue - Cut the Flue/Terminal Assembly to Length 11
3.5 Rear Flue - Fit the Flue/Terminal Assembly 12
3.6 Rear Flue - Prepare and Fit the Boiler 12
3.7 Side Flue - Prepare the Wall 14
3.8 Side Flue - Cut the Flue/Terminal Assembly to Length 14
3.9 Side Flue - Flue Extension 15
3.10 Side Flue - Prepare and Fit the Boiler 15
3.11 Side Flue - Fit the Flue/Terminal Assembly 17
3.12 Side Flue - Replace the Fan Assembly 17
3.13 Connect the Gas Supply 18
3.14 Connect the Power Supply Cable 18
3.15 Replace the Expansion Vessel 19
3.16 Connect the Water System and Vent the Boiler 19
4. COMMISSIONING 20
4.1 Boiler Controls 20
4.2 Prepare the Boiler for Commissioning 20
4.3 Commission the Boiler 20
4.4 Check the Water System 22
4.5 Replace the Inner Case Front Panel and Expansion Vessel 22
4.6 Balance the System and Adjust the By-pass Valve 22
5. FIT THE CASE 23
6. FINAL ASSEMBLY 24
7. ANNUAL SERVICE 25
7.1 Remove the Case 25
7.2 Dismantling Prior to Servicing 26
7.3 Cleaning the Boiler 27
7.4 Reassemble the Boiler 27
7.5 Replace the Case 28

8. LIGHTING INSTRUCTIONS **29**
9. REPLACEMENT OF PARTS **30**
9.1 General Access Prior to Replacement of Parts 30
9.2 Reassemble the Boiler After Replacement of Parts 30
9.3 To Replace the Spark Electrode or Electrode Lead 31
9.4 To Replace the Pilot Injector 31
9.5 To Replace the Pilot Burner 32
9.6 To Replace the Main Burner 32
9.7 To Replace the Overheat Cut-Off Device 32
9.8 To Replace the Fan 33
9.9 To Replace the Air Flow Pressure Switch 33
9.10 To Replace the Main Burner Injector 33
9.11 To Replace the Boiler Thermostat 34
9.12 To Replace the Combustion Chamber Insulation Panels 34
9.13 To Replace the Heat Exchanger 35
9.14 To Replace the Pump Overrun Thermostat 35
9.15 To Replace the Gas Valve 35
9.16 To Replace the Gas Valve Solenoids 36
9.17 To Replace the Ignition Circuit Board 36
9.18 To Replace the Pump 36
9.19 To Replace the Diverter Valve Head 37
9.20 To Replace the Pressure Gauge 37
9.21 To Replace the Safety Valve 38
9.22 To Replace the By-Pass Valve 38
9.23 To Replace the Test Switch 39
9.24 To Replace the Neon Indicator 39
9.25 To Replace the Expansion Vessel 39
9.26 To Replace the Programmer (if fitted) 40
10. WIRING DIAGRAMS **41**
11. FAULT FINDING GUIDE **43**
12. EXPLODED VIEW **44**
13. SHORT LIST SPARE PARTS **45**

If you have any reason to complain of any shortage of components listed in Figs 6, 7 or 29, supply a list of the item(s) concerned, boiler model, your name, address and any information which may help us avoid further error.
Address for return:
Supplies Manager
Potterton Interpart.
Brooks House
Coventry Road
Warwick. CV34 4LL
Tel: 0926 493471

The boiler model and serial No. are given on the Serial No. label on the front of the control box.
The boiler data label is on the left hand side of the chassis next to the gas valve.

---

1. TECHNICAL DATA - PAGE 4

The boiler model and serial No. are given on the Serial No. label on the front of the control box.
The boiler data label is on the left hand side of the chassis next to the gas valve.

Boiler model		Ultra Dv 30	Ultra Dv 40	Ultra Dv 50	Ultra Dv 60	Ultra Dv 80
Burner type (Aeromatic)		AC13/112503	AC13/112504	AC13/112505	AC13/112506	AC13/112507
Burner injector		Bray 23/800	Bray 23/1100	Bray 23/1350	Bray 23/1700	Bray 23/2400
Pilot injector		SIT 0.977.142 marked 33				
Pilot flame		35 to 40 mm				
Spark gap		5.0 mm ± 2 mm				
Ignition		Intermittent pilot				
Weight (empty)		47.7 kg	48.2 kg	48.8 kg	49.3 kg	50.7 kg
Max. lifting weight (installing)		24.0 kg	24.5 kg	25.1 kg	25.6 kg	27.0 kg
Water content		1.65 litre	1.70 litre	1.75 litre	1.80 litre	2.15 litre
Pump (Myson SMC)		SD51			SD61	
System expansion vessel		10 litre (charge pressure 0.5 mbar)				
*Water flow rate		11.4 1/min	15.0 1/min	19.2 1/min	22.8 1/min	30.6 1/min
*Pump head		4.6 m water	3.8 m water	2.8 m water	1.8 m water	1.7 m water
Maximum flow temperature		82°C				
Design water temperature rise		11°C				
Height		800 mm				
Width		450 mm				
Depth		350 mm				
Clearance required for servicing	Top	50 mm (150 mm if Vertex flue kit is to be fitted)				
	Bottom	150 mm				
	Front	500 mm				
	Sides	10 mm				
Flue terminal size		100 mm dia x 65 mm deep				
Water connections		Compression fittings to accept 22 mm and 28 mm copper tubing to BS2871				
Gas connection		Rp ½ (bottom left hand side)				
Mid position zone valve		Honeywell 22 mm				28 mm

* Water flow rate and pump head available for a system temperature differential of 11°C.

NOMINAL BOILER RATINGS

Boiler model	Output		Input		Burner setting pressure	
	kW	Btu/h	kW	Btu/h	mbar	in wg
Ultra Dv 30	5.9	20 000	7.5	25 500	6.4	2.6
	8.8	30 000	11.0	37 500	13.5	5.4
Ultra Dv 40	8.8	30 000	11.1	37 900	7.9	3.2
	11.7	40 000	14.7	50 000	13.7	5.5
Ultra Dv 50	11.7	40 000	14.7	50 000	9.0	3.6
	14.7	50 000	18.3	62 500	14.2	5.7
Ultra Dv 60	14.7	50 000	18.8	64 000	9.7	3.9
	17.6	60 000	22.0	75 000	13.5	5.4
Ultra Dv 80	17.6	60 000	22.3	76 000	8.3	3.3
	23.4	80 000	29.3	100 000	14.7	5.9

2. GENERAL - PAGE 5

2.1 INTRODUCTION

These fanned draught room-sealed wall mounted boilers are for use on natural gas only.
The Ultra Dv boilers are range rated at the following outputs:
Ultra Dv 30: 5.9 to 8.8 kW (20 000 to 30 000 Btu/h) Ultra Dv 40: 8.8 to 11.7 kW (30 000 to 40 000 Btu/h)
Ultra Dv 50: 11.7 to 14.7 kW (40 000 to 50 000 Btu/h) Ultra Dv 60: 14.7 to 17.6 kW (50 000 to 60 000 Btu/h)
Ultra Dv 80: 17.6 to 23.4 kW (60 000 to 80 000 Btu/h)
All models are factory set to the maximum output.
The boilers are designed for use on sealed water systems **only**, with an indirect hot water cylinder.
THEY MUST NOT BE CONNECTED TO A DIRECT CYLINDER.

2.2 REGULATORY REQUIREMENTS

The boiler must be installed in accordance with: The Gas Safety (Installation and Use) Regulations 1990 and the current issue of: the Building Regulations, Building Standards (Scotland) Regulations, Local Building Regulations, Model and local Water Undertaking Bye-laws, IEE Wiring Regulations and Health & Safety Document No. 635 "The Electrician At Work Regulations 1989".
Detailed recommendations are stated in the following British Standards: BS6891:1988, BS6798:1987, BS5546:1990, BS5440:1:1990, BS5440:2:1989 and BS5449:1990.
Note: Gas Safety (Installation and Use) Regulations 1990: It is the law that all gas appliances are installed by competent persons, in accordance with the above regulations. Failure to install appliances correctly could lead to prosecution. It is in your own interest, and that of safety to ensure that the law is complied with.

2.3 DELIVERY & KITS AVAILABLE

The unit is delivered in two packages (1) the uncased boiler with casing panels and (2) the flue/terminal assembly.
A 1 m flue extension kit is available (the total flue length must not exceed 3 m).
An integral programmer kit is also available to fit within the boiler casing.
A Vertex Flue kit is available which allows the flue to exit vertically from the boiler (maximum length is 4 m).
A vertical balanced flue kit is available which allows the flue to exit vertically from the boiler (maximum length 3.15m).
A fit from the inside flue kit is available which allows the flue/terminal assembly to be fitted from inside the building.
Note: Read any kit instructions **before** installing the boiler.

2.4 GAS SUPPLY

The natural gas requirements are as follows:
Ultra Dv 30: 1.1 m^3/h Ultra Dv 40: 1.4 m^3/h
Ultra Dv 50: 1.8 m^3/h Ultra Dv 60: 2.1 m^3/h Ultra Dv 80: 2.8 m^3/h
The meter and supply pipes must be capable of delivering this quantity of gas in addition to the demand from any other appliances in the house.
The complete installation must be tested for gas soundness and purged as described in BS6891.

2.5 ELECTRICITY SUPPLY

240V ~ 50Hz via a fused double pole switch with a contact separation of at least 3 mm in both poles adjacent to the boiler.
There must be only one common isolator for the boiler and its control system and it must provide complete electrical isolation.
Fuse the supply at 3 A. The minimum requirement for the power supply cable is that it should be a PVC sheathed cord at least 0.75 mm^2 (24 x 0.2 mm) (code designation HO5 VV-F or HO5 VVH2-F) as specified in table 16 of BS6500:1984.
All wiring external to the boiler shall comply with the latest IEE Wiring Regulations, and any local regulations which apply.
WARNING: THIS APPLIANCE MUST BE EARTHED.

In the event of an electrical fault after installation of the appliance, preliminary electrical systems checks must be carried out i.e. Earth Continuity, Short Circuit, Polarity and Resistance to Earth.

2.6 AIR SUPPLY

The room in which the boiler is installed does not require a purpose provided air vent.
If the boiler is installed in a cupboard or compartment, permanent air vents are required in the cupboard or compartment, one at high level and one at low level, either direct to the outside air or to a room. Both high level and low level air vents must communicate with the same room or must be on the same wall to outside air. Both the high level and low level vent must each have a free area as stated below. The free area of each vent may be halved if the ventilation is provided directly from outside.

Ultra Dv 30: 110 cm² Ultra Dv 40: 140 cm²
Ultra Dv 50: 180 cm² Ultra Dv 60: 210 cm² Ultra Dv 80: 264 cm²

If the boiler is installed in a cupboard or compartment with a door, allow at least 50 mm clearance between the front of the boiler and the door for air movement.

2.7 FLUE SYSTEM

The flue/terminal assembly supplied with the boiler is 500 mm long.
A 1 m flue extension is available, if required.
Under no circumstances should the total flue length exceed 3 m. A 3 m length flue would comprise of three 1m kits, one of which would be cut down to 500mm.
The following method should be used to determine the flue length.

Rear flue A = C + 28 mm
Side flue A = B + C

where: A = Required flue length.
B = Inside wall to the side of the white case plus (+) 30 mm.
C = Finished wall thickness.

2.8 LOCATION OF BOILER

The boiler is not suitable for external installation.
The boiler must be mounted on a flat wall which is sufficiently robust to take the weight of the boiler.
The boiler is suitable for installation to a combustible wall e.g. wood cladding, provided that the flue duct is not closer than 25 mm to combustible material. A metal sleeve should be installed to surround the flue duct to provide a 25 mm annular space. Further guidance is given in BS5440:1:1990, sub-clauses 3.3 and 4.2.5.
If the boiler is to be installed in a timber framed building it should be fitted in accordance with the British Gas publication - “Guide for Gas Installation in Timber Framed Housing” reference DM2. If in doubt advice must be sought from the local region of British Gas or from Potterton Myson.
The boiler may be installed in any room, although particular attention is drawn to the requirements of the current IEE Wiring Regulations and, in Scotland, the electrical provisions of the Building Standards applicable in Scotland with respect to the installation of the boiler in a room containing a bath or shower.
Where a room-sealed appliance is installed in a room containing a bath or shower, any electrical switch or appliance control, utilising mains electricity should be so situated that it cannot be touched by a person using the bath or shower.
Where the installation of the boiler will be in an unusual position, special procedures may be necessary and BS6798 and BS5546 give detailed guidance on this aspect.
A cupboard or compartment used to enclose the boiler must be designed and constructed specifically for this purpose. An existing cupboard or compartment may be used provided that it is modified for the purpose. Details of essential features of cupboard/compartment design including airing cupboard installations are given in BS6798 and BS5546 and should be complied with.
The boiler requires only the clearances stated in the Technical Data, page 4, after installation. If it is felt that extra space is required for installation any adjacent kitchen units or fitments may have to be removed.
The boiler must be installed so that the flue terminal is exposed to the external air. It is important that the position of the terminal allows the free passage of air across it at all times.
The minimum acceptable spacings from the terminal to obstructions, corners and ventilation openings are shown on the following page.

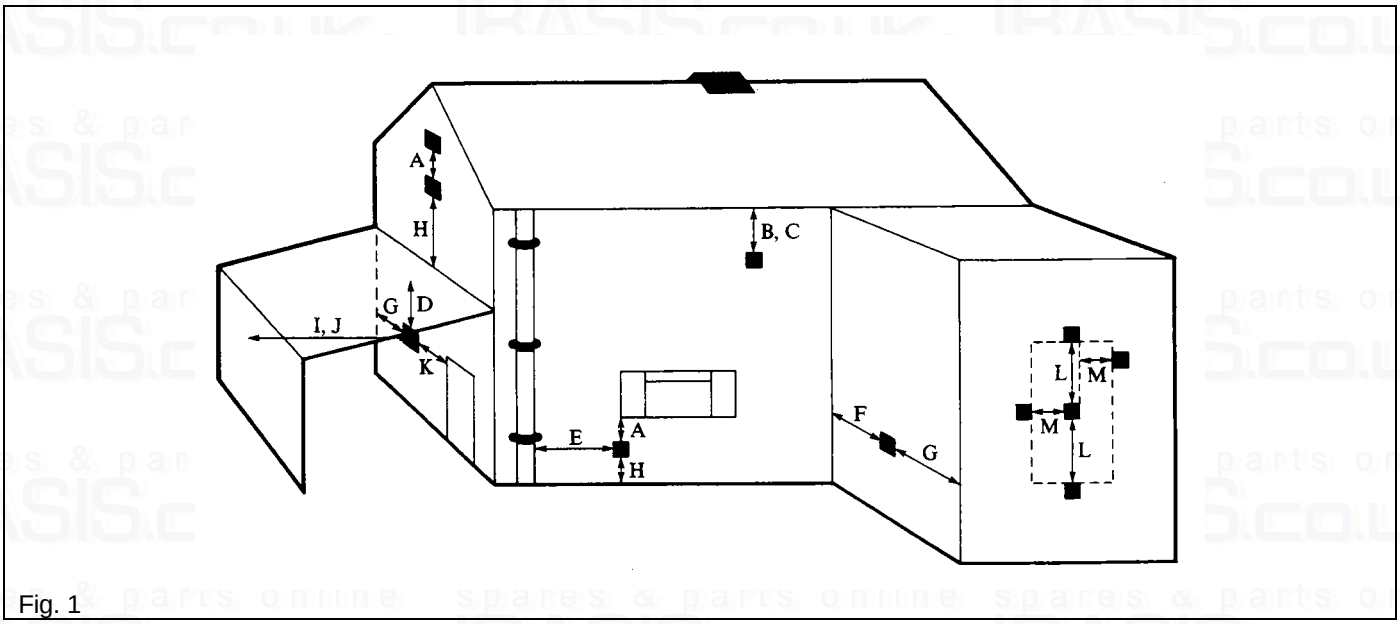

Fig. 1

Dimension	Terminal Position (Fanned Balanced Flue models)	Min. Spacing
A	Directley below an openig, air brick, window, etc.	300
B	Below gutters, soil pipes or drain pipes	75 *
C	Below eaves	200 *
D	Below balconies or car port roof	200
E	From a vertical drain pipe or soil pipe	75
F	From an internal corner	25
G	From an external corner	25
H	Above ground, roof or balcony level	300 **
I	From a surface facing the terminal	600
J	From a terminal facing the terminal	1200
K	From an opening in the car port (e.g. door, window) into dwelling	1200
L	Vertically from a terminal on the same wall	1500
M	Horizontally from a terminal on the same wall	300

*If the terminal is fitted within 850 mm of a plastic or painted gutter/pipe or 450 mm of painted eaves, an aluminium shield of at least 750 mm in length should be fitted to the underside of the gutter/pipe or painted surface.
**If the terminal is fitted less than 2 m above a balcony, above ground or above a flat roof to which people have access then a suitable terminal guard must be provided and fitted.

A type K1 (G.C. No. 393 552) protective guard is available from Tower Flue Components Ltd. at: Vale Rise, Tonbridge, Kent TN9 1TB, Tel: 0732 351555.
The guard must be securely fitted to the wall and centrally located over the flue terminal. Refer to the manufacturers instructions.

2.9 BOILER DIMENSIONS AND GAS CONNECTION

Refer to Fig. 2.

Overall cased dimensions.
Height: 800 mm
Width: 450 mm
Depth: 350 mm
Clearance required for servicing.
Top: 50 mm
Bottom: 150 mm
Front: 500 mm
Side: 10 mm
Note: Additional clearances for installation may be required, these are to be left to the discretion of the installer.

150 mm is required above the boiler if the Vertex flue kit is fitted.

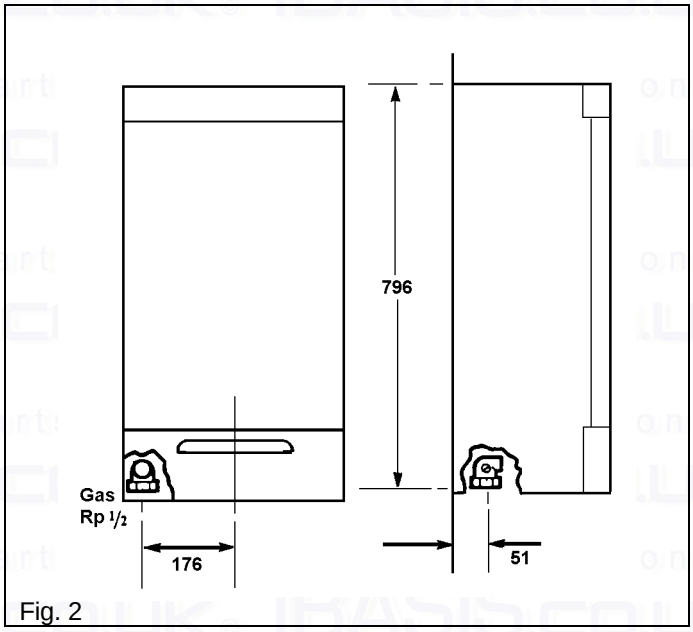

Fig. 2

2.10 WATER CONNECTIONS

Refer to Fig. 3.

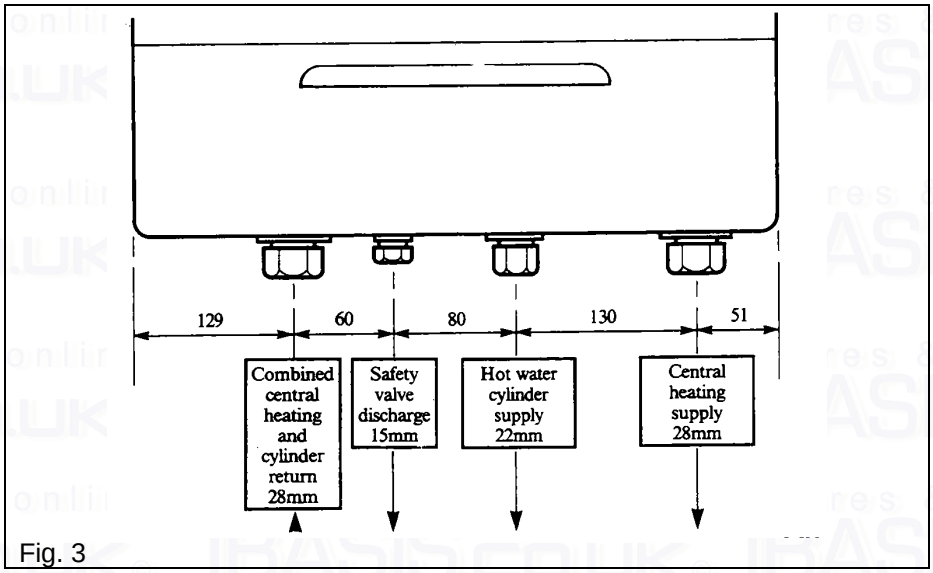

Fig. 3

Compression fittings are supplied loose with the boiler to accept 22 mm and 28 mm copper tubing to BS2871.

Common return	28 mm.
Hot water cylinder supply	22 mm.
Central heating supply	28 mm.

A 15 mm nut and olive are fitted to the safety valve discharge ready to accept a 15 mm pipe.
All water connections are centred 40 mm from the wall.
Note: The supply and return connections at the base of the boiler have been temporarily sealed with plastic plugs. Remove **ALL THREE** plugs before connecting any pipework.
Fit one or more draining taps (BS2879) to enable the water system to be fully drained.
A factory set by-pass is built into the boiler and **must not** be adjusted.

2.11 SEALED SYSTEM REQUIREMENTS

Refer to Fig. 4.

1. The installation must comply with the requirements of BS6798 and BS5449. Maximum water temperature is 82°C ± 3°C.
2. A safety valve set to operate at 3 bar and a pressure gauge covering the range 0 to 6 bar are incorporated within the boiler.
3. A 10 litre expansion vessel to BS4841 is fitted and pre-charged to 0.5 bar. This is suitable for a system with a maximum water content of 140 litres.
4. Water lost from the system shall be replaced from a make-up vessel, and double check valve, mounted higher than the top of the system and connected as shown in Fig. 4a or manually by a temporary hose connection as shown in Fig. 4b (remove the temporary hose after use).
   Note: Stop valves must comply with the requirements of BS1010:2.
5. The hot water cylinder shall either be the indirect coil type or a cylinder fitted with an immersion calorifier.
6. An automatic air vent should be fitted at the highest point in the system.

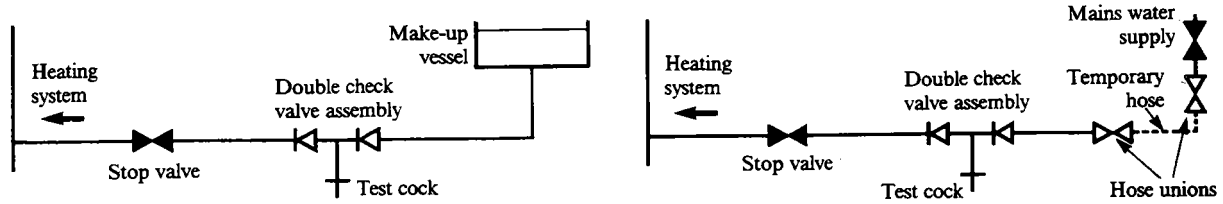

Fig. 4a **Fig. 4b**

2.12 SYSTEM SCHEMATIC

Refer to Fig. 5.

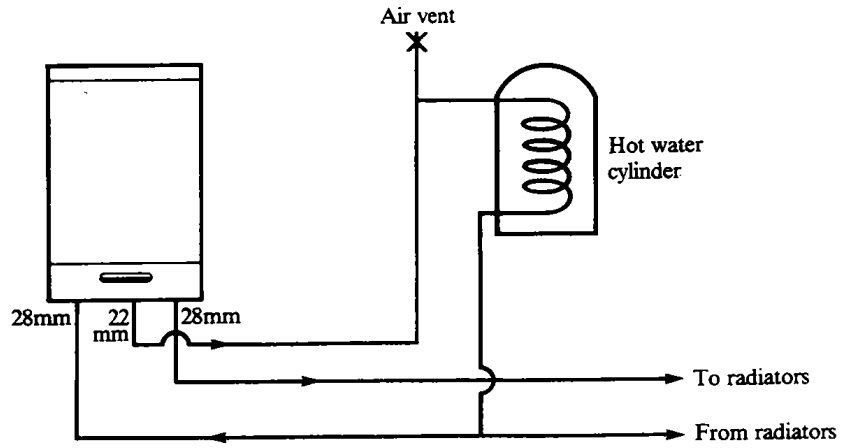

Fig. 5

3. INSTALLATION - PAGE 10

3.1 UNPACK THE BOILER

Refer to Fig. 6.

1. Carefully unpack the boiler.
2. Do not discard any packaging until all the items are accounted for, see Fig. 6.
3. Place the case pack and foam seal to one side so as not to damage the case parts before fitting them. See Fig. 29 for case parts.
4. Check that the boiler fixings pack contains:-

   Four No.8 x 12 lg. c'sk hd. screws.
   Six No.6 x 10 lg. pan hd. screws.
   Two M4 x 10 lg. c'sk hd. screws.
   Four M6 x 10 lg. hex. hd. screws.
   One 22 mm nut and olive.
   Two 28 mm nuts and olives.

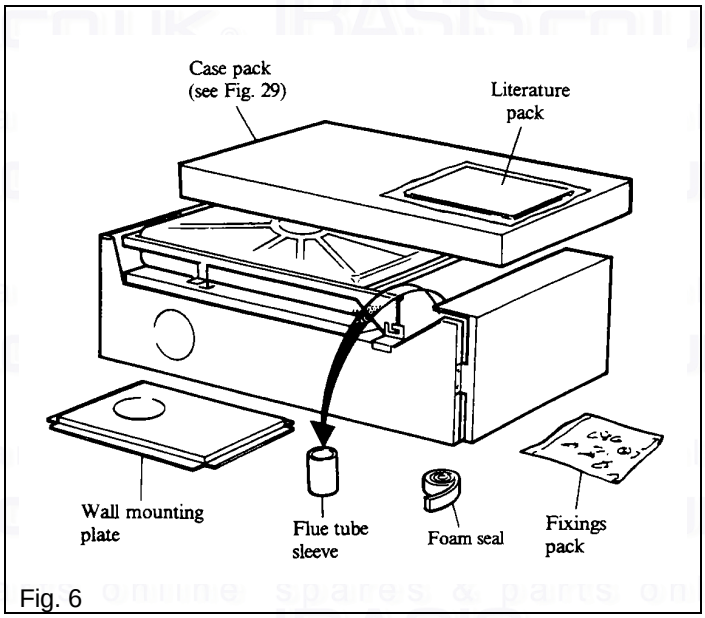

Fig. 6

3.2 UNPACK THE FLUE TERMINAL

Refer to Fig. 7.

1. Carefully unpack the flue/terminal assembly.
2. Do not discard any packaging until all the items are accounted for, see Fig. 7.
3. Bend the cutting jig to shape as shown in Fig. 7. The jig is easily bent by hand.

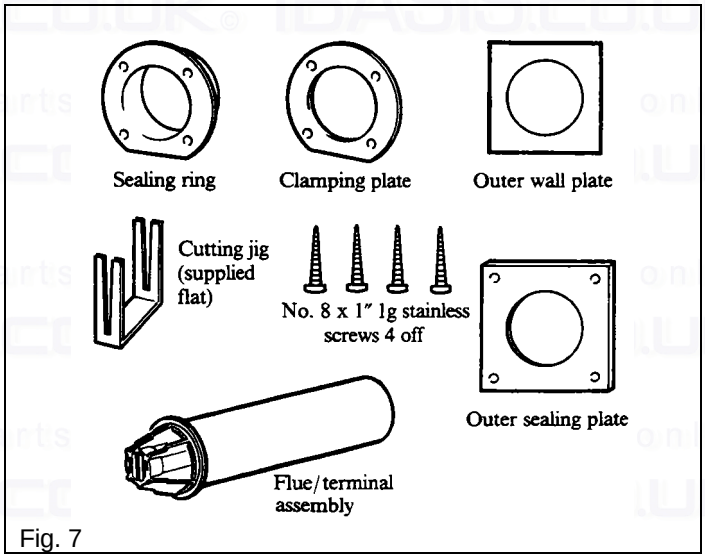

Fig. 7

IMPORTANT
Sections 3.3 to 3.6 are for rear flue applications.
Sections 3.7 to 3.12 are for side flue applications.

3.3 REAR FLUE - PREPARE THE WALL

Refer to Figs. 8 and 9.

1. Remove the four screws and sealing plate from the wall mounting plate. Discard the sealing plate but retain the four screws.
2. Decide upon the position of the boiler, ensuring that the position of the flue terminal will meet the requirements given in section 2.6.
   Using the wall mounting plate as a template and adding the following dimensions to the raised edges of the mounting plate will give the space necessary for the boiler including the minimum clearances required for servicing:-
   Top 107 mm, Bottom 528 mm, Each side 78 mm.
   The side of the white case is 68 mm from the raised edge of the mounting plate.
3. Again using the mounting plate as a template mark the position of the hole for the flue duct and the five mounting plate fixing holes as shown in Fig. 8.
   Ensure the plate is level and the right way up.
4. Cut the 115 mm dia. hole in the wall and drill and plug the fixing holes to accept 2½" lg. No.12 woodscrews.
5. Make a note of the finished wall thickness, this is very important and is required for section 3.4 when cutting the flue/terminal assembly to length.
6. Place the rubber sealing ring, supplied with the flue/terminal assembly, in position in the opening in the wall mounting plate as shown in Fig. 9, it does not matter what position the cut-away is in. Ensure that the groove in it is located correctly over the mounting plate and that the holes line up with the fixing holes in the mounting plate.
7. Secure the sealing ring in position with the clamping plate, supplied with the flue/terminal assembly, using the four M4 x 10 lg. screws previously removed from the mounting plate.

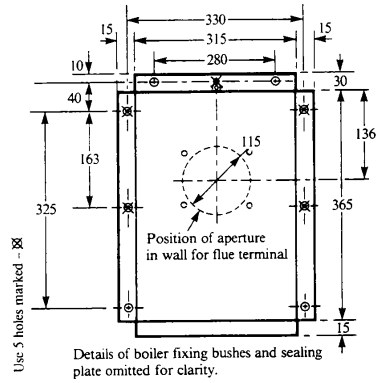

Fig. 8

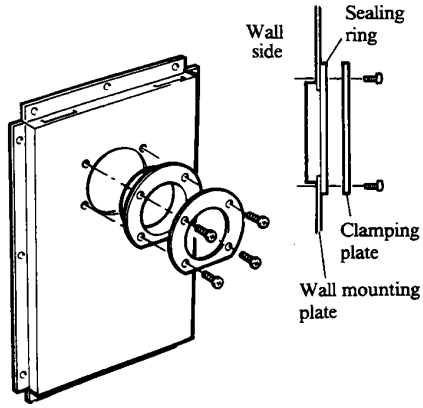

Fig. 9

8. Secure the mounting plate in position with five 2½" lg. No.12 woodscrews (not supplied). Ensure it is level, the right way up and that the hole for the flue is centralised over the hole cut in the wall.

3.4 REAR FLUE - CUT THE FLUE/TERMINAL ASSEMBLY TO LENGTH

Refer to Fig. 10.

1. Using the measurement noted in section 3.3 mark the flue/terminal assembly so that it is 28 mm plus (+) finished wall thickness, from the back of the terminal flange to the end of the tubes.
2. With the cutting jig, supplied with the flue/terminal assembly, in position over the flue/terminal assembly as shown in Fig. 10, cut the tubes to the correct length.
   Using the cutting jig should ensure that the tubes are cut square.
3. Clean up the edges of the cut tubes and discard the cutting jig.

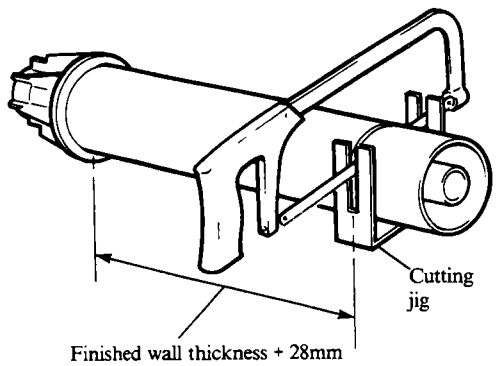

Fig. 10

3.5 REAR FLUE - FIT THE FLUE/TERMINAL ASSEMBLY

Refer to Figs. 11 and 12.

Note: As the flue/terminal assembly is not physically secured to the boiler or wall mounting plate, the outer wall plate and outer sealing plate must be used to secure the flue/terminal assembly to the wall.

1. Fit the outer wall plate, supplied with the flue/terminal assembly, over the flue/terminal assembly as shown in Fig. 11.
2. From outside the building insert the flue/terminal assembly into the wall and carefully push it fully home.
3. If necessary make good the outside wall around the flue duct.
4. Place the outer sealing plate assembly, supplied with the flue/terminal assembly, over the terminal as shown in Fig. 12 and mark the position of the four fixing holes.
5. Remove the sealing plate and drill and plug the holes, suitable for 1" lg. No.8 woodscrews.
   Note: The terminal should be covered before drilling to prevent debris entering the terminal.
6. Remove any covering from the terminal. Position the sealing plate over the terminal and secure it to the wall with four 1" lg. No.8 screws, supplied with the flue/terminal assembly.

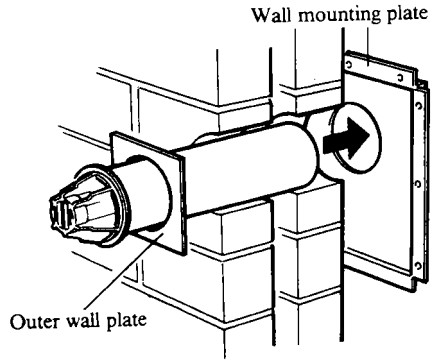

Fig. 11

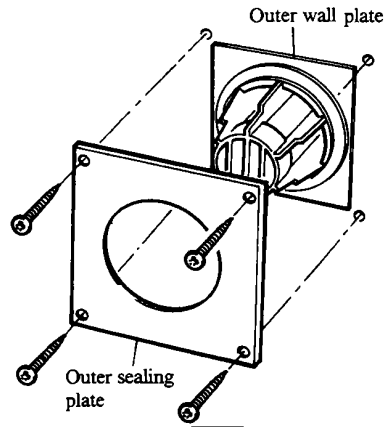

Fig. 12

3.6 REAR FLUE - PREPARE AND FIT THE BOILER

Refer to Figs. 13 and 14.

1. Disconnect the flexible pipe connection to the bottom of the expansion vessel, take care not to lose the washer. Remove the two screws securing the expansion vessel support frame to the inner case front panel. Holding the vessel and frame swing them out to clear the boiler. Remove the frame and vessel from the boiler by lifting the frame out of its bottom pivoting point. See Fig. 13. Cut the foam seal in two and stick onto the inner case

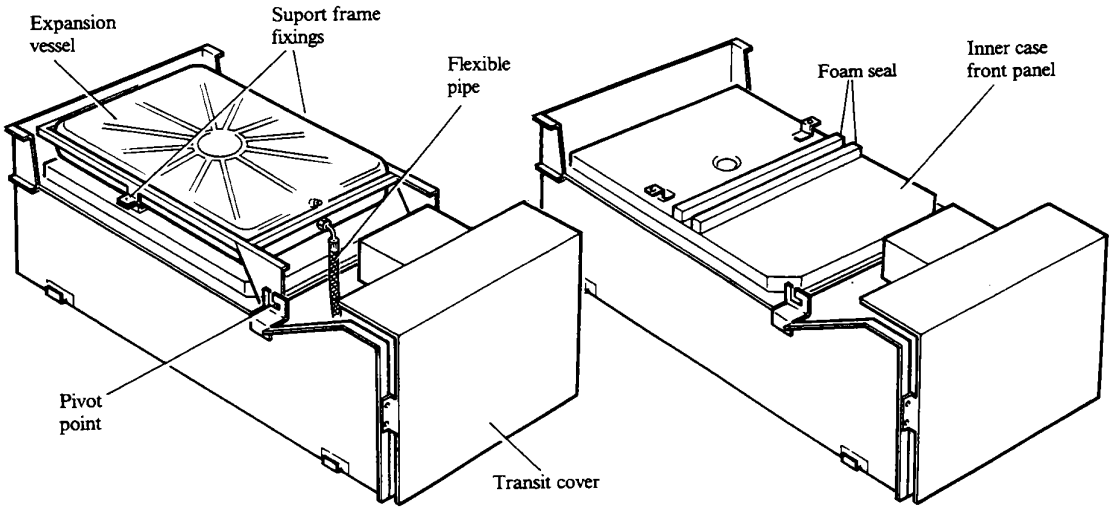

Fig. 13

front panel just below the depression. See Fig. 13.

2. Remove the four screws (two at the top and two at the bottom) securing the inner case front panel and lift off the panel. See Fig. 13.
   Note: When the inner case front panel is removed, the four case seal housing channels are not secured to the boiler as they are retained in position by the front panel. Ensure that they are correctly fitted over the chassis edges before the front panel is replaced.
3. Remove the two screws securing the fan assembly to the flue hood. Withdraw the assembly, disconnecting

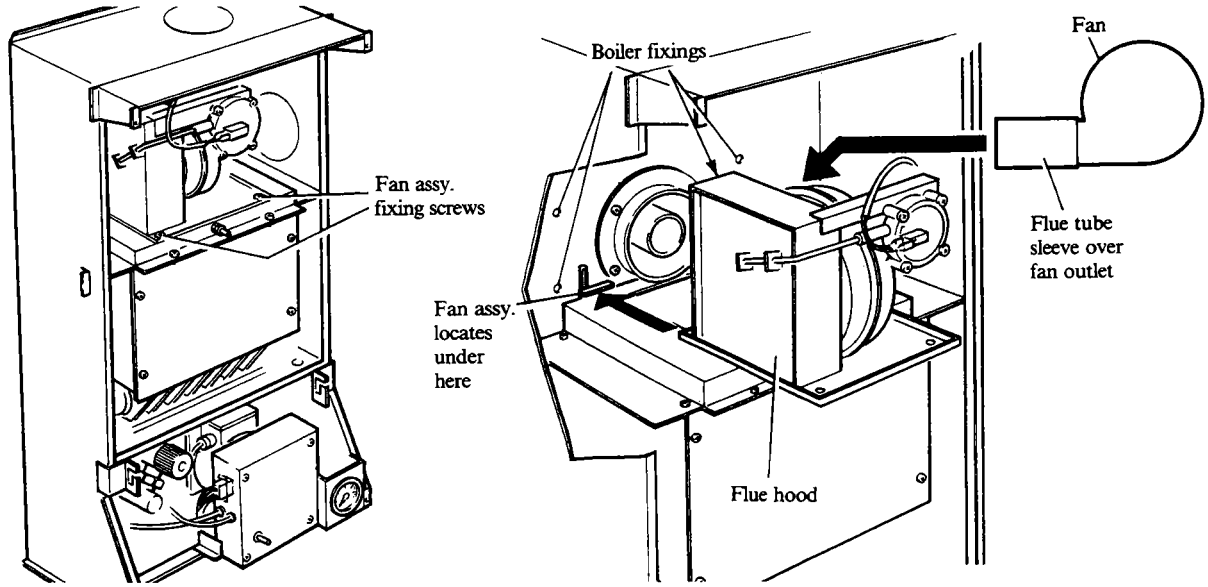

Fig. 14

the fan motor and pressure switch leads. See Fig. 14.

4. Lift the boiler into position over the wall mounting plate. The boiler has two brackets on the back of the chassis at the top, these should be located on top of the wall mounting plate to take the weight of the boiler.
5. Secure the boiler to the wall mounting plate using the four M6 hex. hd. screws, supplied with the boiler.
6. Remove the four screws securing the transit cover to the bottom of the boiler, see Fig. 13 and discard the cover and screws.
7. Ensure that the 'O' ring is in position on the fan outlet, then fit the flue tube sleeve, supplied with the boiler, over the fan outlet and push it fully home.
8. Place the fan assembly on top of the flue hood with the outlet facing to the rear and reconnect the leads, see Fig. 14a, as follows:
   Two violet leads to the fan motor.
   Yellow lead to pressure switch No connection.
   Red lead to pressure switch Nc connection.
   Black lead to pressure switch C connection.
9. With the fan assembly resting on the flue hood push it towards the rear of the boiler, locate the flue tube sleeve on the fan outlet into the inner tube of the flue/terminal assembly and push the fan assembly fully home until the base is located under the returns at the rear of the flue hood, see Fig. 14.
10. Secure the front of the fan assembly to the flue hood with the two screws previously removed.
11. **Proceed to section 3.13.**

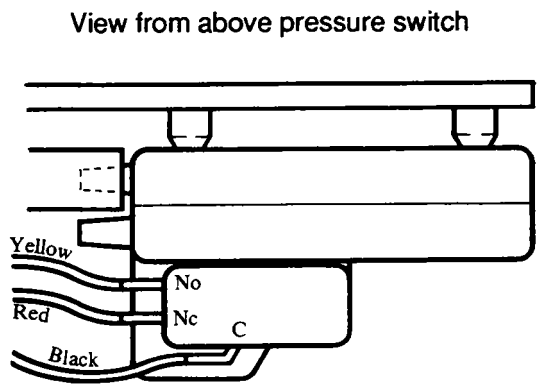

Fig. 14a

3.7 SIDE FLUE - PREPARE THE WALL

Refer to Figs. 15 and 16.

1. Decide upon the position of the boiler, ensuring that the position of the flue terminal will meet the requirements given in section 2.6.
   Using the wall mounting plate as a template and adding the following dimensions to the raised edges of the mounting plate will give the space necessary for the boiler including the minimum clearances required for servicing:-
   Top 107 mm, Bottom 528 mm, Each side 78 mm.
   The side of the white case is 68 mm from the raised edge of the mounting plate.
   Note that the maximum distance from the side of the white case to the OUTSIDE wall surface is 2970 mm.
2. Again using the mounting plate as a template mark the positions of the five mounting plate fixing holes, the side of the boiler and the horizontal centre line of the flue as shown in Figs. 15 and 16.
   Ensure the plate is level and the right way up.
3. Continue the horizontal flue centre line across the wall until it reaches the side wall and continue it around onto the side wall as shown in Fig. 16. Ensure these lines are level.
4. Mark the position of the hole for the flue duct as shown in Fig. 16.
5. Cut the 115 mm dia. hole in the wall and drill and plug the fixing holes to accept 2½" lg. No.12 woodscrews.
6. Make a note of the finished wall thickness, this is very important and is required in section 3.8 when cutting the flue/terminal assembly to length.
7. Secure the mounting plate in position with five 2½" lg. No.12 woodscrews (not supplied). Ensure it is level and the right way up.

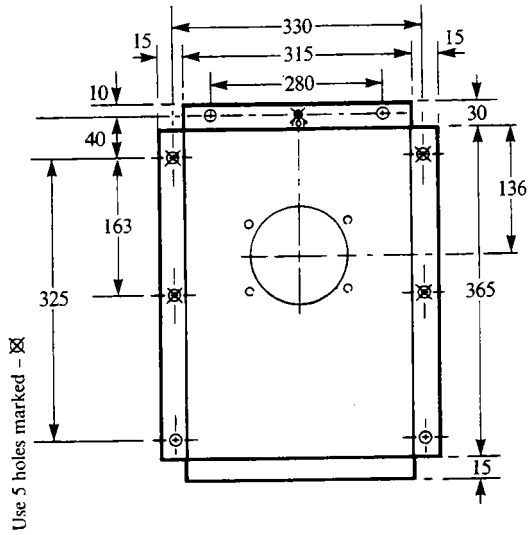

Fig. 15

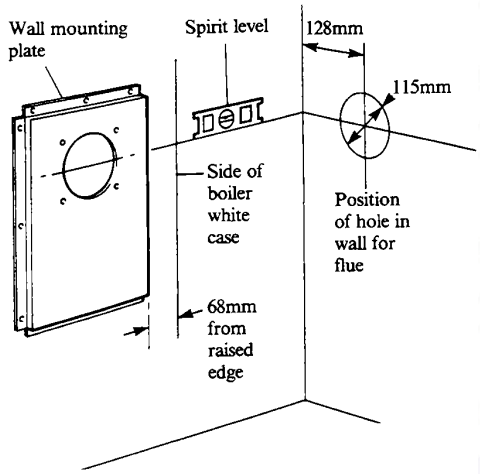

Fig. 16

3.8 SIDE FLUE - CUT THE FLUE /TERMINAL ASSEMBLY TO LENGTH

Refer to Fig. 17.

The finished wall thickness plus (+) the distance from the inside wall to the side of the white case plus (+) 30 mm will give the length of the flue/terminal assembly required.
If the length required is less than 500 mm proceed as follows, if it is more go straight to section 3.9.

1. Mark the flue/terminal assembly to the required length, measure from the back of the terminal flange.
2. With the cutting jig, supplied with the flue/terminal assembly, in position over the flue/terminal assembly as shown in Fig. 17, cut the tubes to the correct length.
   Using the cutting jig should ensure that the tubes are cut square.
3. Clean up the edges of the cut tubes and discard the cutting jig.

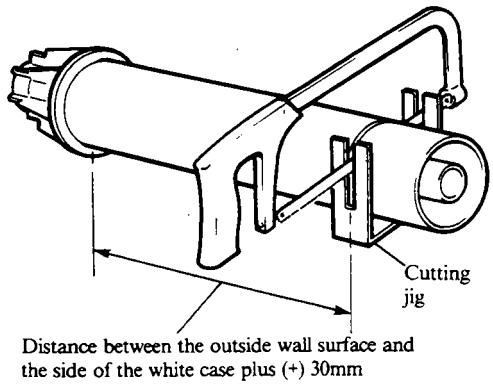

Fig. 17

3.9 SIDE FLUE - FLUE EXTENSION

Refer to Fig. 18.

The finished wall thickness plus (+) the distance from the inside wall to the side of the white case plus (+) 30 mm will give the length of the flue/terminal assembly required.
This length must not exceed 3 m.
If the length of the flue/terminal assembly is to be more than 500 mm, one, two or three flue extensions will have to be used as follows:

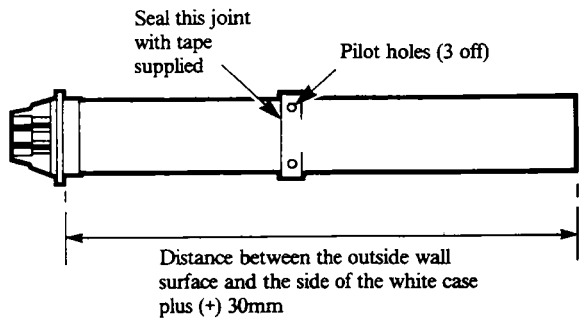

Fig. 18

1. Carefully unpack the flue extension.
   Supplied with the extension tube are three No.8 x 10 lg. screws and a small roll of sealing tape.
2. Locate the flared end of the extension over the open end of the flue/terminal assembly as shown in Fig. 18. Ensure that the inner flue tubes are engaged.
3. Using the pilot holes in the flared end of the extension, drill three 2.8 mm dia. holes into the outer tube of the flue/terminal assembly. Take care not to damage the inner flue tube with the drill.
   Secure the extension to the flue/terminal assembly using the three screws supplied with the extension. Seal the joint with the tape supplied with the extension.
   If the length of the flue/terminal assembly is to be more than 1500 mm fit another flue extension to the one just fitted in the same way. Similarly if the assembly is to more than 2500 mm fit another flue extension.
4. Mark the flue/terminal assembly to the required length, measure from the back of the terminal flange.
5. With the cutting jig, supplied with the flue/terminal assembly, in position over the flue/terminal assembly as shown in Fig. 17, cut the tubes to the correct length.
   Using the cutting jig should ensure that the tubes are cut square.
6. Clean up the edges of the cut tubes and discard the cutting jig.

3.10 SIDE FLUE - PREPARE AND FIT THE BOILER

Refer to Figs. 19 and 20.

1. Disconnect the flexible pipe connection to the bottom of the expansion vessel, take care not to lose the washer.
   Remove the two screws securing the expansion vessel support frame to the inner case front panel. Holding the vessel and frame swing them out to clear the boiler. Remove the frame and vessel from the boiler by lifting the frame out of its bottom pivoting point. See Fig. 19. Cut the foam seal in two and stick onto the inner case

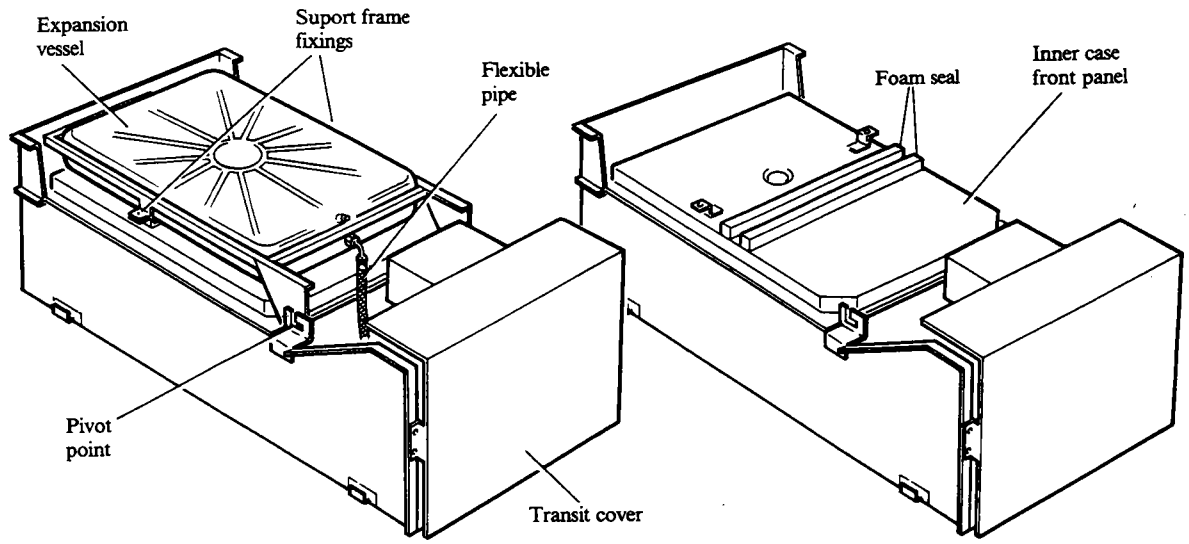

Fig. 19

front panel just below the depression. See Fig. 19.

2. Remove the four screws (two at the top and two at the bottom) securing the inner case front panel and lift off the panel. See Fig. 19.
   Note: When the inner case front panel is removed, the four case seal housing channels are not secured to the boiler as they are retained in position by the front panel. Ensure that they are correctly fitted over the chassis edges before the front panel is replaced.
3. Remove the two screws securing the fan assembly to the flue hood. Withdraw the assembly, disconnecting the fan motor and pressure switch leads. See Fig. 20.
4. Lift the boiler into position over the wall mounting plate. The boiler has two brackets on the back of the chassis at the top, these should be located on top of the wall mounting plate to take the weight of the boiler.
5. Secure the boiler to the wall mounting plate using the four M6 hex. hd. screws, supplied with the boiler.
6. Remove the four screws securing the transit cover to the bottom of the boiler, see Fig. 19 and discard the cover and screws.
7. Remove the four screws and sealing plate from the side of the chassis from which the flue is to exit. Discard the sealing plate but retain the four screws.
8. Place the rubber sealing ring, supplied with the flue/terminal assembly, in position in the opening in the chassis side as shown in Fig. 20. Ensure that the cut-away is at the bottom, that the groove in it is located correctly over the chassis side and that the holes line up with the fixing holes in the chassis side.
9. Secure the sealing ring in position with the clamping plate, supplied with the flue/terminal assembly, using the four screws previously removed from the chassis side. Ensure that the cut-away is at the bottom.
10. Select the appropriate side panel, see Fig. 29, through which the flue is to exit, remove the edge clips and push out the round infill panel.
    Locate the side panel over the two fixings at the side of the boiler chassis against the wall. Secure the panel in position to the front of the boiler, at the top and bottom, using two of the No.8 x 12 lg. countersunk hd. screws supplied with the boiler.

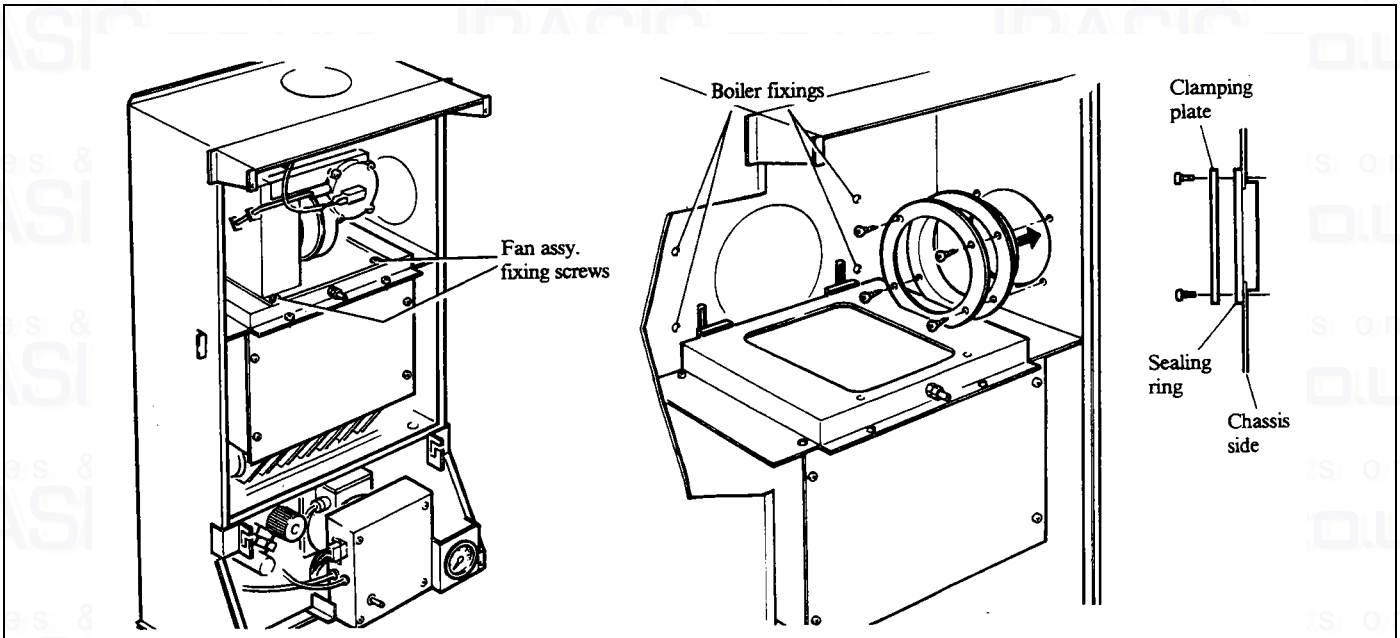

Fig. 20

3.11 SIDE FLUE - FIT THE FLUE/TERMINAL ASSEMBLY

Refer to Figs. 21 and 22.

Note: As the flue/terminal assembly is not physically secured to the boiler the outer wall plate, the outer sealing plate must be used to secure the flue/terminal assembly to the wall.

1. Fit the outer wall plate, supplied with the flue/terminal assembly, over the flue/terminal assembly as shown in Fig. 21.
2. From outside the building insert the flue/terminal assembly into the wall and carefully push it fully home.
3. If necessary make good the outside wall around the flue duct.
4. Place the outer sealing plate assembly, supplied with the flue/terminal assembly, over the terminal as shown in Fig. 22 and mark the position of the four fixing holes.
5. Remove the sealing plate and drill and plug the holes, suitable for 1” lg. No.8 woodscrews.
   Note: The terminal should be covered before drilling to prevent debris entering the terminal.
6. Remove any covering from the terminal. Position the sealing plate over the terminal and secure it to the wall with four 1” lg. No.8 screws, supplied with the flue/terminal assembly.

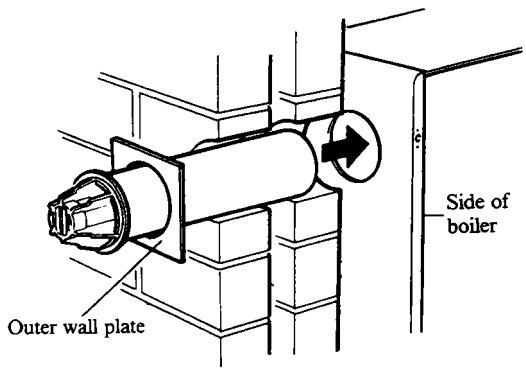

Fig. 21

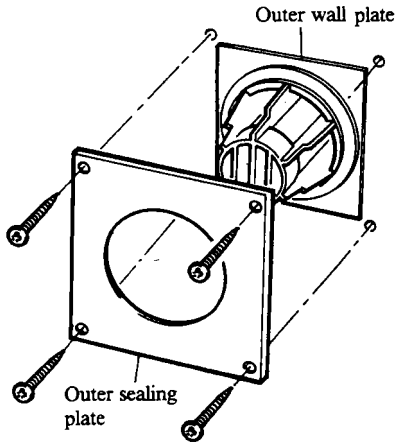

Fig. 22

3.12 SIDE FLUE - REPLACE THE FAN ASSEMBLY

Refer to Fig. 23.

1. Ensure that the 'O' ring is in position on the fan outlet, then fit the flue tube sleeve, supplied with the boiler, over the fan outlet and push it fully home.
2. Place the fan assembly on top of the flue hood with the outlet facing to the side from which the flue is to exit (for right hand exit the fan will be at the front, for left hand exit the fan will be at the back) and reconnect the leads, see Fig. 14a, as follows:
   Two violet leads to the fan motor.
   Yellow lead to pressure switch No connection.
   Red lead to pressure switch Nc connection.
   Black lead to pressure switch C connection.
3. With the fan assembly resting on the flue hood push it towards the rear of the boiler locating the base of the fan assembly under the returns at the rear of the heat exchanger top frame (1 in Fig. 23), then slide it to the left or right to locate the flue tube sleeve on the fan outlet into the inner tube of the flue/terminal assembly (2 in Fig. 23).
4. Secure the front of the fan assembly to the flue hood with the two screws previously removed.

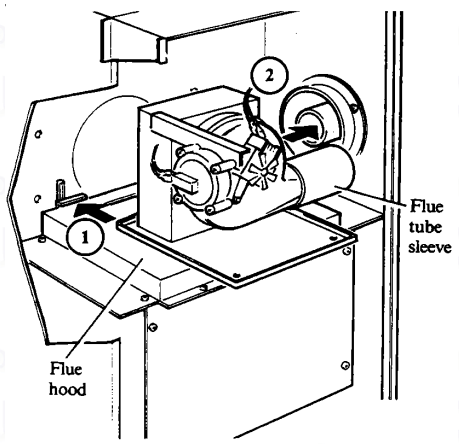

Fig. 23

3.13 CONNECT THE GAS SUPPLY

Refer to Fig. 24.

Connect a 15 mm gas supply, using a suitable adaptor, to the service cock.

It is recommended that a 22 mm supply be used for the 80 model.

Note: The gas supply must be from below, as the boiler chassis extends below the service cock, see Fig. 2.

Do not turn the gas supply on at this stage.

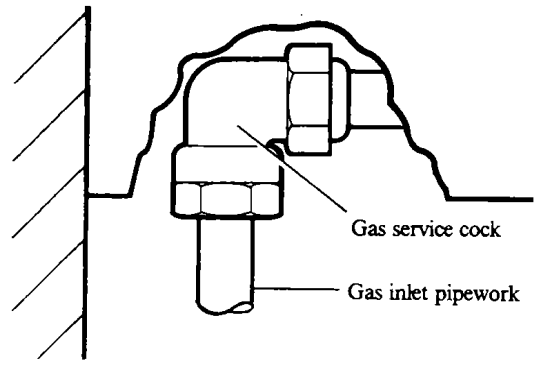

Fig.24

3.14 CONNECT THE POWER SUPPLY CABLE

Refer to Fig. 25.

1. Remove the five screws securing the control box and its front cover, carefully swing down the cover and lower the control box. Take care not to damage the boiler thermostat capillary.
2. Two cable clamps are provided on the back of the control box, use one just for the mains supply and the other for any other external wiring. Slacken the necessary cable clamp screws. Feed the power supply cable into the boiler through the hole (marked 'wiring') in the bottom of the chassis, then into the control box through a clamp and connect the wires, brown to L and blue to N on the terminal block and green and yellow to the earthing screw (⏚). Ensure correct polarity.
   Note: When connecting the power supply cable, ensure that the length of the earth wire is such, that if the power supply cable slips out of the cable clamp the live and neutral wires become taut before the earth wire.

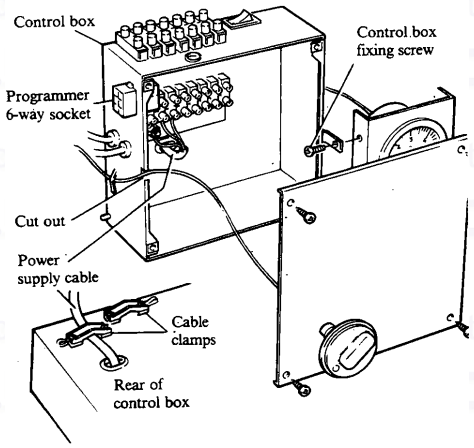

Fig. 25

3. Feed the cylinder thermostat wires, room thermostat wires and any other external controls wiring into the boiler through the hole (marked 'wiring') in the bottom of the chassis, then into the control box through the other cable clamp and connect them to the terminal block.
   Refer to the tables on page 42 for various room and cylinder thermostat connections.
   Note: The cylinder thermostat must be a 240 V type.
4. If the optional programmer kit is not fitted and other external controls are used (e.g. programmer, room thermostat). The switched live must be connected to terminal ON on the terminal block.
5. Take up excess slack in the power supply cable between the terminal block and the cable clamp, then tighten the cable clamp screws. Repeat for any wires through the other cable clamp.
6. Raise the control box and replace the control box front, ensuring that the boiler thermostat capillary is located in the cut out in the side of the control box. Secure in position with four of the screws previously removed. Check that the control box can be raised and lowered freely, without straining any of the wiring.
   Ensure that all external control cables are secured.
   Do not secure the control box in its raised position at this stage.
7. Carry out preliminary electrical system checks i.e. Earth Continuity, Short Circuit, Polarity and Resistance to Earth.

Do not switch on the electricity supply at this stage.

3.15 REPLACE THE EXPANSION VESSEL

Refer to Fig. 26.

1. Remove the two tie rods from the retaining clips on the front of the expansion vessel frame and remove the split pins from the ends of the rods.
2. With the control box lowered, locate the bottom of the expansion vessel frame into its pivoting point in the boiler chassis as shown in Fig. 26.
3. Hook the plain ends of the tie rods into the brackets on the sides of the boiler, then locate the other ends in the brackets on the expansion vessel frame. Pass the split pins through the ends of the rods to secure them in place at the expansion vessel end. See Fig. 26.
4. Position the expansion vessel in the frame with the connection point uppermost and towards the boiler.
5. Reconnect the flexible connection to expansion vessel. Ensure that the washer is in position between the flexible connection and expansion tank.
6. Leave the expansion vessel in the lowered position.

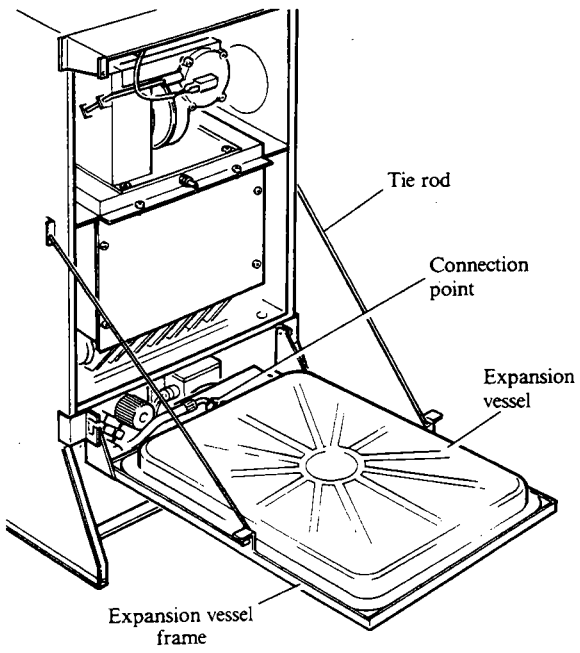

Fig. 26

3.16 CONNECT THE WATER SYSTEM AND VENT THE BOILER

Refer to Fig. 27 (expansion vessel, frame and control box omitted for clarity).

1. Ensure that the three plastic plugs are removed from the pipe ends.
2. Make the connections as shown in Fig. 27.
   For dimensions see section 2.10.
   For system schematic see section 2.12.
3. Fill the system, see section 2.11, paragraph 4.
   Ensure that all valves are open.
   The pump isolating valves are open when the operating slots are horizontal.
   The manual lever on the right hand side of the diverter valve, see Fig. 27, must be moved to the 'MAN OPEN' (top) position when filling, venting or draining the system.
   Thoroughly flush the system through. A radiator type air vent is positioned on the left hand side (at the front) of the heat exchanger, and is accessible through a hole in the blanking plate connected to the flue hood. Use this to vent the boiler.

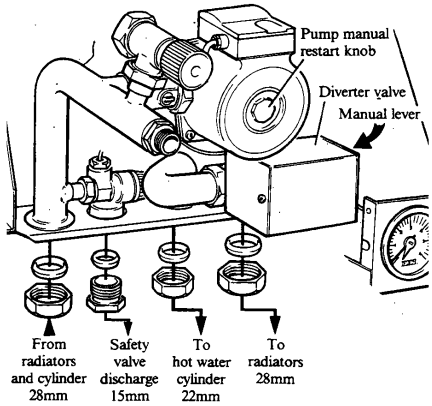

Fig. 27

4. Refill and vent the system.
5. The pump bearings and shaft rely on system water to provide lubrication. It is important therefore to ensure that the bearings have been properly vented and **that the pump is not run dry** otherwise damage may occur to the bearings. Unscrew the pump manual restart knob, see Fig. 27 and withdraw it to engage in the motor shaft. Rotate the knob and check that the motor shaft rotates freely. Apply a sideways pressure to the knob until a small amount of water becomes visible. The pump is now vented. After use the manual restart knob should be screwed back into its original position, finger tight. Take care not to allow any water to drip onto the control box or other electrics.
6. Pressurise the system to 1.5 bar and check for leaks, rectifying where necessary.
   Set the red adjustable pointer on the pressure gauge to 1.5 bar.

Note: Any discharge from the safety valve must be directed clear of the boiler to a drain in such a manner that it may be seen, but cannot cause injury to persons or property.

4. COMMISSIONING - PAGE 20

4.1 BOILER CONTROLS

Refer to Fig. 28.
(Case and inner case front panel shown removed, expansion vessel and frame omitted for clarity).
Note: Pilot position varies slightly between boiler models.

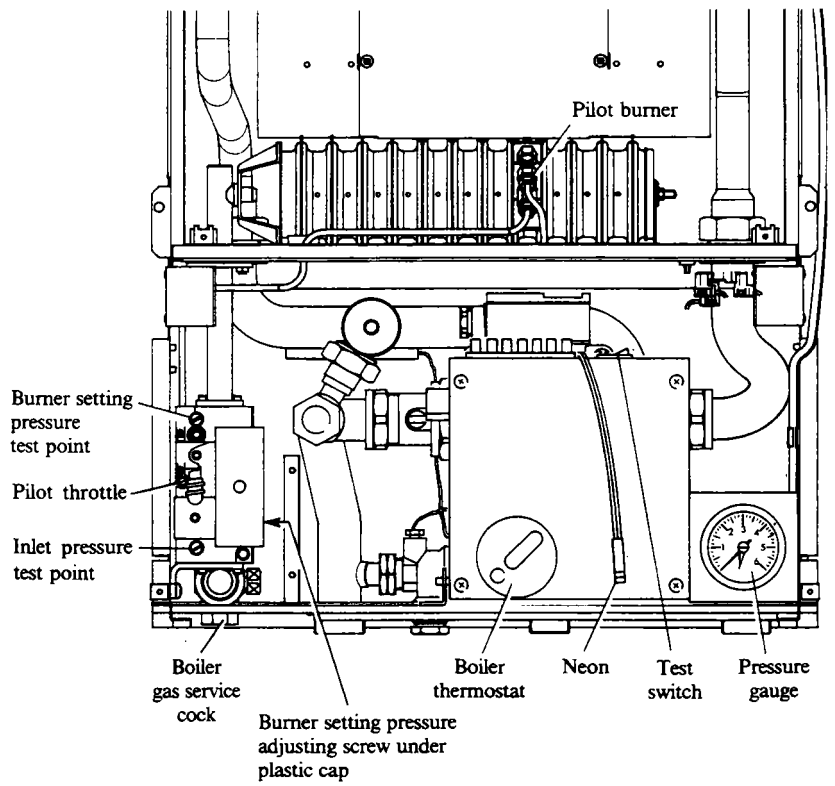

Fig. 28

4.2 PREPARE THE BOILER FOR COMMISSIONING

Refer to Fig. 28 for boiler controls.

1. For a new boiler it will be necessary to fit the boiler thermostat control knob (supplied in the case pack). Place the control knob in position on the spindle on the front of the control box.
2. A test switch is provided on the top of the control box which will allow the boiler to operate during commissioning without the programmer connected.
   Before the case is fitted this switch must be set to the O (off) position if a programmer is used.
3. Ensure the control box front is secured in position.

4.3 COMMISSION THE BOILER

1. Test for gas soundness and purge the supply

a. With the boiler service cock closed (the cock is closed when the operating spindle is turned fully clockwise [⟲]), pressure test the gas supply and inlet pipework connection to the boiler service cock for soundness in accordance with BS6891.

b. Remove the gas inlet pressure test point screw. Ensure the gas supply is on and open the boiler service cock to purge in accordance with BS6891. Replace the test point screw and test for gas soundness.

2. Check the ignition sequence

With the gas supply isolated check the ignition sequence as follows:

a. Set the test switch on the top of the control box to 1 (on) and check that all system controls are calling for heat.

b. Switch on the electricity supply and turn the boiler thermostat fully clockwise [⌒]. The automatic ignition sequence will start. The fan will start and after a purge period of about 10 seconds a click will be heard indicating that the start gas solenoid has opened, the ignition sparks will also be heard. The ignition sparks continue until the pilot is lit. As the gas supply is not yet turned on the ignition sparks will continue until either the electricity supply is switched off or the boiler thermostat is turned off (fully anticlockwise [⌒]).

c. Turn the boiler thermostat fully anticlockwise (⌒) to terminate the ignition sequence.

3. Check the pilot flame and test the pilot supply for gas soundness

a. Ensure that the gas and electricity supplies are on, the boiler thermostat is turned fully anticlockwise (⌒) and the test switch on the top of the control box is set to 1 (on).

b. Turn boiler thermostat fully clockwise (⌒). The unit will go through the ignition sequence. The pilot will light and a second or so after the pilot has lit the main gas solenoid will open and the main burner will light.

c. Check that the flame (35 to 40 mm long) envelops the electrode and extends 10 mm past it.
The pilot throttle is factory set fully open (turning the throttle clockwise reduces the flame).

d. Test the pilot supply connections at the gas valve and pilot assembly for gas soundness using a suitable leak detecting fluid.

e. Turn the boiler thermostat fully anticlockwise (⌒).

4. Test the main burner supply for gas soundness

a. Ensure that the gas and electricity supplies are on, the boiler thermostat is turned fully anticlockwise (⌒), the test switch on the top of the control box is set to 1 (on) and check that all system controls are calling for heat.

b. Turn the boiler thermostat fully clockwise (⌒). The unit will go through the automatic ignition sequence and the pilot will light. A second or so after the pilot is lit the main gas solenoid will open and the main burner will light.

c. Test the main burner manifold connection at the gas valve for gas soundness using a suitable leak detecting fluid.

5. Check the main burner setting pressure

After the main burner has been alight for 10 minutes:

a. Turn the boiler thermostat fully anticlockwise (⌒). Remove the burner setting pressure test point screw on the gas valve and connect a pressure gauge.

b. Turn the boiler thermostat fully clockwise (⌒) and check the burner setting pressure.
Turn the adjusting screw clockwise (⌒) to decrease the setting pressure.
The adjusting screw is covered by a plastic cap, carefully prise this off with a suitable screwdriver and replace after adjusting the pressure.
Note: The boiler is factory set to the maximum input. See Technical Data, page 4, for the boiler ratings and setting pressures.

c. Turn the boiler thermostat fully anticlockwise (⌒), disconnect the pressure gauge and replace the pressure test point screw. Turn the boiler thermostat fully clockwise (⌒) to light the main burner and test for gas soundness around the pressure test point screw using a suitable leak detecting fluid. Turn the boiler thermostat fully anticlockwise (⌒) to turn the boiler off.

6. Check that the arrow on the data label (positioned on the left hand side of the chassis next to the gas valve) is against the correct boiler rating.

7. For a new boiler, check the water system then balance and adjust the by-pass as described in sections 4.4 and 4.5 before replacing the inner case front panel and expansion vessel.

8. Switch off the electricity supply to the boiler.

9. Set the test switch to O (off) if a programmer is used.
Note: The pilot burner is turned off every time the main burner is off. The ignition sequence is automatically activated when the boiler thermostat requires heat. The boiler is fitted with a neon, see Fig. 28, which will light whenever the main burner is on. The neon is to be fitted to the case bottom assembly when (re)fitting the case.

4.4 CHECK THE WATER SYSTEM

1. When the system has been tested, ensure that the boiler is off, drain the water while it is still hot in order to complete the flushing process.
2. Where the boiler is used on an old system, special care is required. The system should be drained and flushed out, ensuring that all the radiators are drained.
3. In areas with hard or aggressive water we recommend that an inhibitor, suitable for use with copper tube boilers, should be used in accordance with the manufactures instructions.
4. Refill, vent the system, boiler and pump, see section 3.16.
5. Pressurise the system to 1.5 bar (see section 2.11, paragraph 4) and check for leaks, rectifying where necessary.
6. If a programmer is not to be fitted, the manual lever, see Fig. 27, on the right hand side of the diverter valve must be moved to the 'MAN OPEN' (top) position, ensure it is locked in position.
   If a programmer is to be fitted, the lever must be moved to the 'AUTO' (bottom) position.

4.5 REPLACE THE INNER CASE FRONT PANEL AND EXPANSION VESSEL

1. Ensure that the inner case seals are intact and in position in the seal housing channels and that the channels are correctly located over the sides of the boiler chassis. Replace the inner case front panel (expansion vessel frame fixing brackets nearest the top), securing it in position with four screws. Tighten sufficiently to form a seal.
2. Remove the split pins from the ends of the tie rods and unhook them from the support frame, raise the expansion vessel assembly and secure the frame to the inner case front panel using the two screws previously removed.
3. Unhook the tie rods from the sides of the boiler, replace the split pins into the rods and position them in the retaining clips on the front of the expansion vessel frame.
4. Raise the control box and secure in position with the screw previously removed.

4.6 BALANCE THE SYSTEM

1. Fully open all the radiator lock shield valves and set any thermostatic radiator valves to maximum.
2. With the electricity supply on and the test switch set to 1, turn the boiler thermostat fully clockwise (⌓) to light the boiler.
3. Balance the system using the radiator lock shield valves to give a temperature drop of 11°C across the individual radiators - start with the radiator nearest to the boiler.
4. Turn the boiler thermostat fully anticlockwise (⌓) to turn the boiler off.

5. FIT THE CASE - PAGE 23

Refer to Figs. 29 and 30.

1. Locate the side panel(s) over the two fixings at the side of the boiler chassis against the wall. Secure each panel in position to the front of the boiler, at the top and bottom, using two of the No.8 x 12 lg. countersunk hd. screws supplied with the boiler.
2. If a programmer is used, ensure that the test switch on the top of the control box is set to O (off).
3. Place the outer case front panel in position over the four fixings (two on each side panel) and push the panel back to engage the fixing pins into the front panel.
4. Position the control panel as shown in Fig. 30 and secure it to the bottom panel using three No.6 x 10 lg. screws supplied with the boiler.

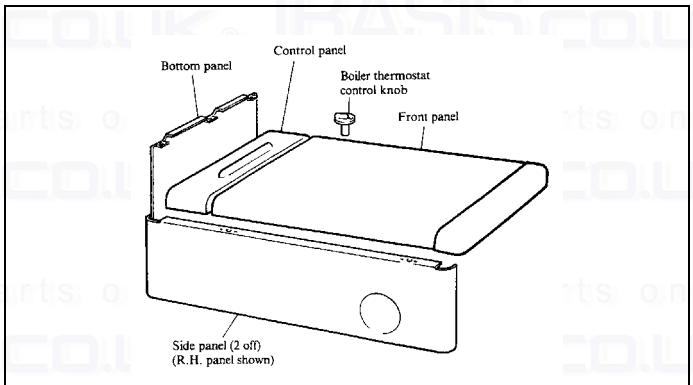

Fig. 29

Note: If the optional programmer kit is to be fitted, push out the blanking panel, see Fig. 30, from the back of the control panel before it is secured to the bottom panel and bracket. Fit the programmer to the back of the control panel, locating the top two hinge pins into the brackets above the opening then lowering it against the panel and securing it at the bottom using the two screws supplied with the programmer..
Retain the Programmer instructions to hand to the User.

5. Ensure that the boiler thermostat control knob is in position on the front of the control box.
6. Carefully slide the bottom panel assembly into position (the bottom panel goes above the returns on the case side panels), clip the neon, see Fig. 28, into its holder on the back of the control panel as the bottom panel is slid into position. With the control panel cover open, secure the control panel to the case side panels with the two M4 x 10 lg. countersunk hd. screws (one each side) supplied with the boiler.

Note: If the programmer kit has been fitted it will be necessary to connect the programmer wiring harness to the rear of the programmer and to the 6-way socket on the left hand side of the control box, see Fig. 25, as the bottom panel assembly is slid into position.

7. Stick the relevant model identification label (supplied in the literature pack) to the rear of the control panel cover.

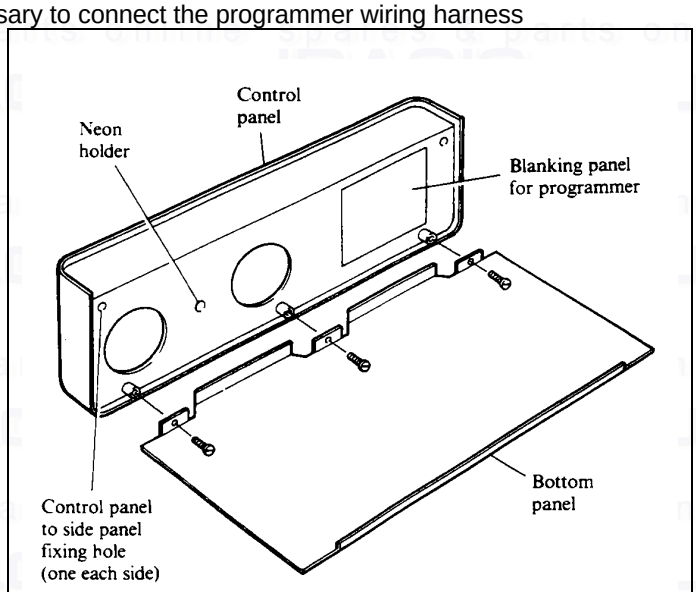

Fig. 30

6. FINAL ASSEMBLY - PAGE 24

1. If a programmer is fitted, set the timer to the correct time and the programme to the required settings. See separate Programmer instructions.
2. Hand the User instructions (and Programmer instructions if fitted) to the User and instruct in the safe operation of the boiler and controls.
3. Advise the User of the precautions necessary to prevent damage to the system and to the building in the event of the system remaining inoperative during frost conditions.
4. Advise the User that for continued efficient and safe operation of the boiler it is important that adequate servicing is carried out at least once a year by the local Gas Region or a C.O.R.G.I. registered Installer.
5. Leave a permanent card attached to the boiler giving:
   a. Name and address of installer.
   b. Date of installation.
   c. A wiring diagram of the circuit.

---

7. ANNUAL SERVICE - PAGE 25

To ensure continued efficient operation of the appliance, it is recommended that it is checked and cleaned as necessary at regular intervals. The frequency of servicing will depend upon the particular installation conditions and usage but in general once per year should be adequate. It is the law that any service work must be carried out by a competent person such as British Gas or other C.O.R.G.I. registered personnel.
The following aspects of the boiler and installation should be examined, and rectified as necessary.

1. Check that the system pressure is 1.5 bar (cold).
2. Run the boiler and check the operation of its controls and ensure that it responds to any switches and programmer.
3. Check the installation of the flue terminal and ensure it is not obstructed.

If it is necessary to dismantle the boiler the following checks should be made.

1. Remove the combustion fan and ensure that it is clean and free of debris. Check the impellor for freedom of rotation.
2. Remove the combustion chamber front and check if the burner or heat exchanger requires cleaning.
3. Examine the main injector orifice and ensure it is clear and undamaged.
4. If a sufficiently large pilot flame cannot be achieved examine the pilot injector orifice to ensure it is clear and undamaged.
5. When refitting the inner case front panel check that the seals are in good condition and compress satisfactorily.

On completion of the service run the boiler and ensure that it operates satisfactorily.
The boiler model and serial No. are given on the Serial No. label on the front of the control box.
The boiler data label is on the left hand side of the chassis next to the gas valve.

WARNING: Before commencing work open the control panel cover (hinges down) and turn the boiler thermostat to O. Allow the boiler to cool and isolate the electricity supply.
IMPORTANT: Always test for gas soundness after completing any servicing of gas carrying components and carry out functional checks of controls.

7.1 REMOVE THE CASE

Refer to Fig. 31.
Ensure that the electricity supply is off.

1. With the control panel cover open, remove the two screws (one each side) securing the control panel to the case side panels.
2. Carefully slide out the assembly away from the boiler, unclipping the neon from the back of the control panel before fully withdrawing the assembly.

   Note: If a programmer is fitted, disconnect the wiring harness from the rear of the programmer before fully withdrawing the bottom panel assembly.

3. Remove the outer case front panel by pulling it forwards off its fixings.
4. Place the case parts safely aside to avoid possible damage.

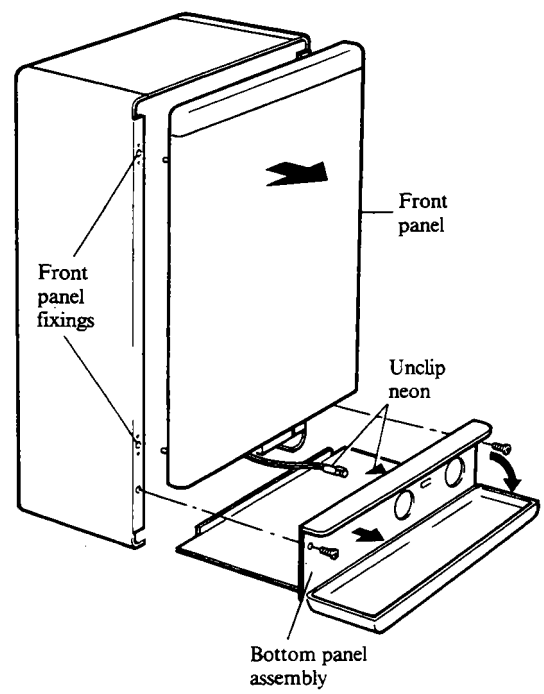

Fig. 31

7.2 DISMANTLING PRIOR TO SERVICING

Refer to Figs. 32, 33 and 34.

1. Turn off the gas supply at the gas service cock (bottom L.H. corner).
2. Remove the screw securing the control box, see Fig. 25 and lower the control box.
3. Remove the two tie rods from the retaining clips on the front of the expansion vessel frame and remove the split pins from the ends of the rods. Remove the two screws securing the expansion vessel support frame to the inner case front panel. Hook the plain ends of the tie rods into the brackets on the sides of the boiler. Carefully lower the expansion vessel and frame (hinged at the bottom). Locate the other ends of the tie rods in the brackets on the expansion vessel frame, then pass the split pins through the ends of the rods to secure them in place. See Fig. 32.

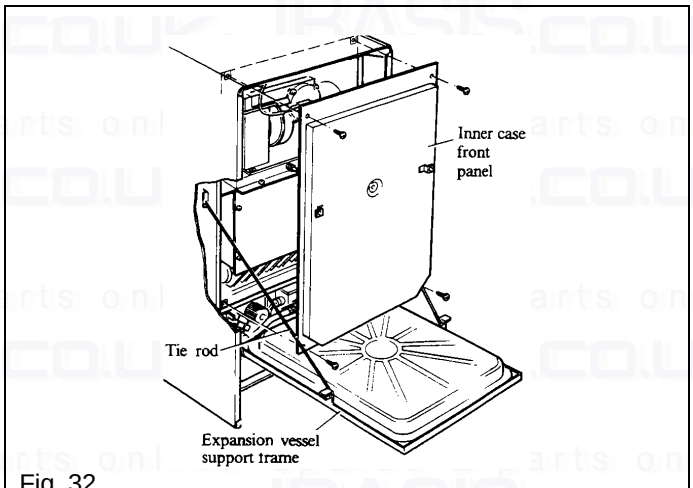

Fig. 32

4. Remove the four screws (two at the top and two at the bottom) securing the inner case front panel and lift off the panel. See Fig. 32.
   Note: When the inner case front panel is removed, the four case seal housing channels are not secured to the boiler as they are retained in position by the front panel. Ensure that they are correctly fitted over the chassis edges before the front panel is replaced.
5. Remove the two screws securing the fan assembly to the flue hood, see Fig. 33. Carefully slide the fan assembly away from the flue to disengage the flue tube sleeve from the flue. Withdraw the fan assembly, disconnecting the fan motor and pressure switch leads.
   Note: If a Vertex Flue is fitted, slide the flue tube sleeve up into the flue to disengage it from the fan outlet.
6. Remove the push rod assembly and the leads from the overheat cut-off device, see section 9.7, then remove the two screws at each side of the flue hood securing the blanking plates and lift out the plates. See Fig. 33.
   Note: On the 80 model these four screws are the only ones securing the flue hood.
7. All models except 80 - Remove the four screws securing the flue hood - two at the back (extended screws) and two at the front. See Fig. 33.
8. Lift the flue hood off the boiler.
9. Remove the six screws (four on 80 model) securing the combustion chamber front cover and remove the cover.
10. Remove the bottom case seal housing channel (lifts off the chassis).
11. Undo the securing nut and remove the spark electrode, see Fig. 34, from the pilot assembly.
12. Undo the tubing nuts and disconnect the pilot supply from both the pilot assembly and gas valve.
    Carefully remove and retain the pilot injector, see Fig. 34.
13. Remove the two screws (underneath the chassis) securing the small baffle infront of the burner and remove the baffle.
14. Remove the two screws securing the right hand end of the burner to the chassis. Slide the burner to the right, to remove it from the main injector and withdraw the burner.

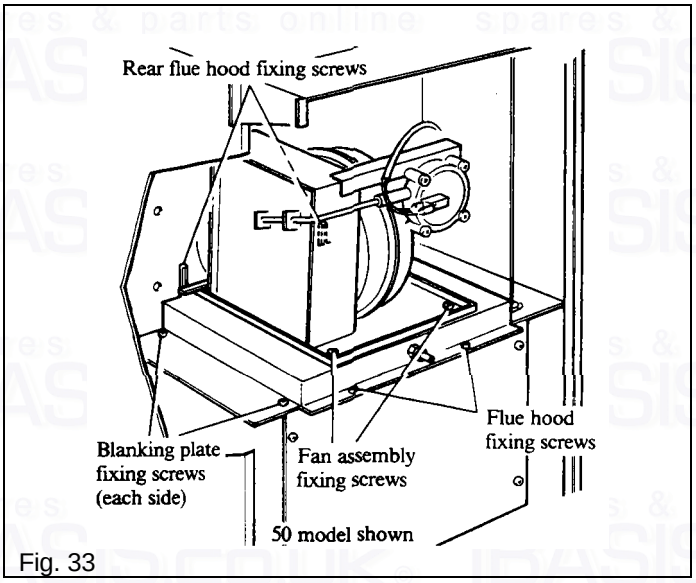

Fig. 33

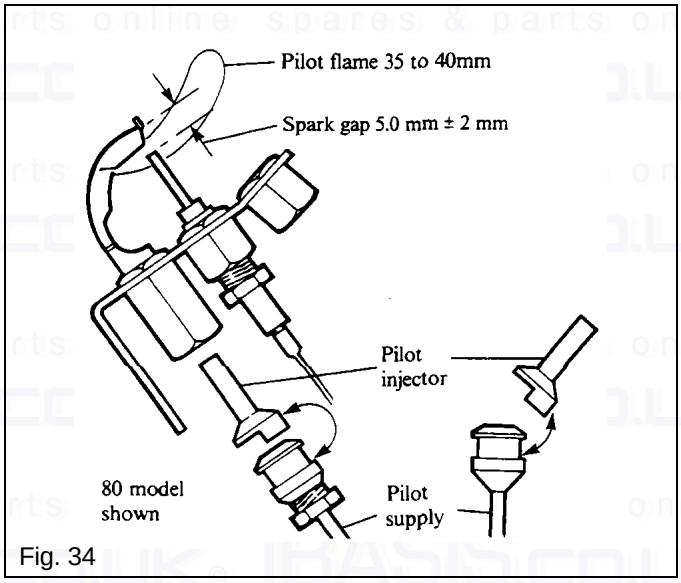

Fig. 34

7.3 CLEANING THE BOILER

1. Brush the heat exchanger from above and below using a suitable brush. Brush back to front NOT sideways. Remove any fallen deposits from the base of the chassis.
2. Brush the burner top and check that the flame ports are clear. Any blockage may be removed with a fine wire brush. Turn the burner open end down and tap gently to remove any debris.
3. If the pilot burner requires cleaning, remove the two screws securing it to the burner and remove, clean the burner head with a fine wire brush then refit it to the main burner.
4. Check the condition of the spark electrode, clean with a fine wire brush if necessary.
5. Unscrew the main injector from the burner manifold (take care not to lose the sealing washer), clean by blowing through or washing. Do NOT clear the injector with a pin or wire. Clean the pilot injector in a similar manner.
6. Replace the main injector using a small amount of jointing compound - do not forget to fit the sealing weasher.
7. Remove the four screws securing the fan to the turret (make a note which way the fan is fitted). Examine the fan impellor and carefully clean if necessary. Refit the fan to the turret.

7.4 REASSEMBLE THE BOILER

1. Replace the burner (ensure that it is located over the injector) then the small baffle infront of it using the screws previously removed.
2. Locate the pilot injector over the end of the pilot supply, as shown in Fig. 34 and carefully position it in the pilot burner. Secure the pilot supply to the pilot assembly and gas valve.
3. Replace the spark electrode and check that the spark gap is 5.0 mm ± 2mm, see Fig. 34.
4. Ensure that the pilot supply and electrode lead are in position in the cut out in the bottom of the chassis and replace the seal housing channel over the bottom of the chassis, ensure it is pushed fully home.
5. Replace the combustion chamber front cover and secure in position with the four screws previously removed.
6. Replace the flue hood, with the fan assembly retaining returns at the rear. Replace the blanking plates and secure them to the sides of the flue hood with the four screws previously removed.
   Note: On the 80 model these four screws also secure the flue hood to the combustion chamber.
7. All models except 80 - Secure the flue hood to the combustion chamber with the four screws previously removed - two at the back (extended screws) and two at the front.
8. Reconnect the overheat cut-off device leads (the polarity is not important) and connect the push rod to the cut-off device (the rubber sleeve locates over the cut-off device button).
9. Ensure that the flue tube sleeve is on the fan outlet and pushed fully home (if the flue tube sleeve was removed, ensure that the 'O' ring is in position on the fan outlet when replacing the sleeve over the fan outlet). Place the fan assembly on top of the flue hood with the outlet facing towards the flue and reconnect the leads, see Fig. 14a, as follows:
   Two violet leads to the fan motor.
   Yellow lead to pressure switch No connection.
   Red lead to pressure switch Nc connection.
   Black lead to pressure switch C connection.
   With the fan assembly resting on the flue hood engage the flue tube sleeve on the fan outlet into the inner tube of the flue. Ensure that the base of the fan assembly is located under the returns at the rear of the flue hood. (For side exit flue locate the base of the fan assembly under the returns first then slide the fan across into the flue).
   Note: If a Vertex Flue is fitted, slide the flue tube sleeve down out of the flue and over the fan outlet.
   Secure the front of the fan assembly to the flue hood with the two screws previously removed.
10. Refer to the Commissioning Instructions, section 4. Light the pilot and check the flame, test the pilot supply for gas soundness and check the main burner setting pressure.
11. Ensure that the inner case seals are intact and in position in the seal housing channels and that the channels are correctly located over the sides of the boiler chassis. Replace the inner case front panel (expansion vessel frame fixing brackets nearest the top), securing it in position with the four screws previously removed.
    Tighten sufficiently to form a seal.
12. Remove the split pins from the ends of the tie rods and unhook them from the support frame, raise the expansion vessel assembly and secure the frame to the inner case front panel using the two screws previously removed.
13. Unhook the tie rods from the sides of the boiler, replace the split pins into the rods and position them in the retaining clips on the front of the expansion vessel frame.
14. Raise the control box and secure in position with the screw previously removed.

7.5 REPLACE THE CASE

Refer to Fig. 30, if necessary.

1. If a programmer is used, ensure that the test switch on the top of the control box is set to O (off).
2. Carefully slide the bottom panel assembly into position (the bottom panel goes above the returns on the case side panels), clip the neon, see Fig. 31, into its holder on the back of the control panel as the bottom panel is slid into position. With the control panel cover open, secure the control panel to the side panels with the two countersunk hd. screws previously removed.

   Note: If a programmer is fitted it will be necessary to connect the programmer wiring harness to the rear of the programmer as the bottom panel assembly is slid into position.
3. Place the outer case front panel in position over the four fixings (two on each side panel) and push the panel back to engage the fixing pins into the front panel.

Note: Types of screws used:

a. Small machine screws (M4) ..... Pilot burner (6 lg.) and fan to flue turret (10 lg.).
b. Small c'sk machine screws (M4) ..... Control panel to side panels.
c. Large machine screws (M5) ..... Fan assembly, flue hood/blanking plates (80 model) and burner.
d. Extended machine screws (M5) ..... Flue hood (rear on all except 80 model).
e. Self tapping screws (No.8) ..... Combustion chamber front, flue hood distribution plate, flue hood/blanking plates (front and sides on all except 80 model)

8. LIGHTING INSTRUCTIONS - PAGE 29

See section 4.1 for boiler controls.
For access to the controls open the control panel cover (hinges down), if the internal programmer is fitted lower the left hand cover after first opening the right hand one.
If a programmer is fitted refer to Programmer instructions to set the programmer.
Do not attempt to light the boiler if the system pressure (see pressure gauge) is less than 0.5 bar. Repressurise the system to 1.5 bar (see section 2.11, paragraph 4) and check for leaks, rectifying where necessary.
With the gas supply on and the electricity supply off.

1. Turn the boiler thermostat control knob to 0.
2. Switch on the electricity supply, set the programmer to continuous, if a programmer is fitted and check that all system controls are calling for heat.
3. Turn the boiler thermostat to 7. The automatic ignition sequence will start. The fan will start and after a purge period of about 10 seconds a click will be heard indicating that the start gas solenoid has opened, the ignition sparks will also be heard. The pilot will light and after a second or so the main gas solenoid will open and the main burner will light.
   An amber neon, positioned between the pressure gauge and boiler thermostat, will light whenever the main burner is alight.
   Note: The pilot burner is turned off every time the main burner is off. The ignition sequence is automatically activated when the boiler thermostat requires heat.
4. If a programmer is fitted, ensure that the timer is set to the correct time and the programme is set to the required settings.

9. REPLACEMENT OF PARTS - PAGE 30

WARNING: Before commencing work open the control panel cover (hinges down) and turn the boiler thermostat to O. Allow the boiler to cool and isolate the electricity supply.
IMPORTANT: Always test for gas soundness after completing any exchange of gas carrying components and carry out functional checks of controls.

9. 1 GENERAL ACCESS PRIOR TO REPLACEMENT OF PARTS

Refer to Figs. 32 and 35.
Ensure that the electricity supply is off.

1. Replacement of any component requires the removal of the outer case front panel as follows:
   a. With the control panel cover open, remove the two screws (one each side) securing the control panel to the case side panels.
   b. Carefully slide out the assembly away from the boiler, unclipping the neon from the back of the control panel before fully withdrawing the assembly.
   Note: If a programmer is fitted, disconnect the wiring harness from the rear of the programmer before fully withdrawing the bottom panel assembly.
   c. Remove the outer case front panel by pulling it forwards off its fixings.
   d. Place the case parts safely aside to avoid possible damage.
   e. Turn off the gas supply at the gas service cock (bottom L.H. corner).

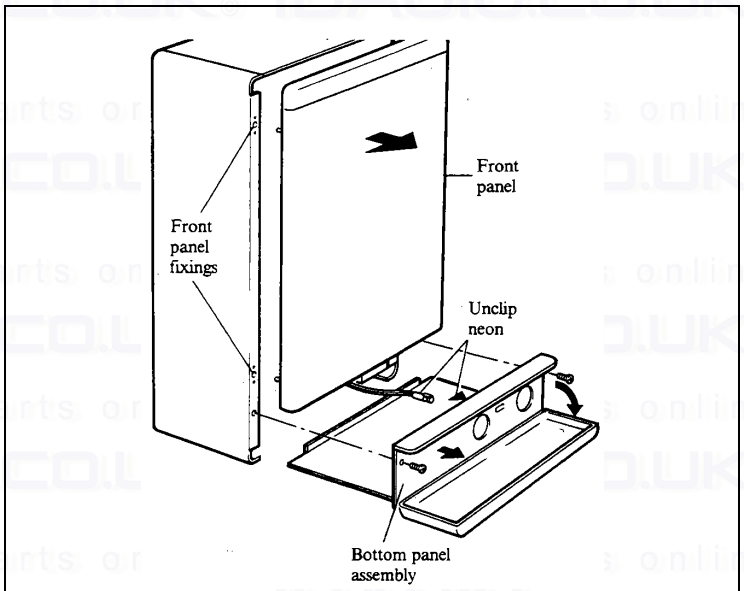

Fig. 35

2. Sections 9.3 to 9.12 involve replacement of components within the room-sealed section of the boiler. All necessitate the removal of the inner case front panel, see Fig. 32, as follows:
   a. Remove the screw securing the control box, see Fig. 25 and lower the control box.
   b. Remove the two tie rods from the retaining clips on the front of the expansion vessel frame and remove the split pins from the ends of the rods. Remove the two screws securing the expansion vessel support frame to the inner case front panel. Hook the plain ends of the tie rods into the brackets on the sides of the boiler. Carefully lower the expansion vessel and frame (hinged at the bottom). Locate the other ends of the tie rods in the brackets on the expansion vessel frame, then pass the split pins through the ends of the rods to secure them in place. See Fig. 32.
   c. Remove the four screws (two at the top and two at the bottom) securing the inner case front panel and lift off the panel. See Fig. 32.
   Note: When the inner case front panel is removed, the four case seal housing channels are not secured to the boiler as they are retained in position by the front panel. Ensure that they are correctly fitted over the chassis edges before the front panel is replaced.

9.2 REASSEMBLE THE BOILER AFTER REPLACEMENT OF PARTS

Refer to Figs. 32 and 35.

1. Ensure that the inner case seals are intact and in position in the seal housing channels and that the channels are correctly located over the sides of the boiler chassis.
2. Replace the inner case front panel (expansion vessel frame fixing brackets nearest the top), securing it in position with the four screws previously removed. Tighten sufficiently to form a seal.
3. Remove the split pins from the ends of the tie rods and unhook them from the support frame, raise the expansion vessel assembly and secure the frame to the inner case front panel using the two screws previously removed.
4. Unhook the tie rods from the sides of the boiler, replace the split pins into the rods and position them in the retaining clips on the front of the expansion vessel frame.
5. Raise the control box and secure in position with the screw previously removed.

6. Turn on the gas supply at the gas service cock.
7. If a programmer is used, ensure that the test switch on the top of the control box is set to O (off).
8. Place the outer case front panel in position over the four fixings (two on each side panel) and push the panel back to engage the fixing pins into the front panel.
9. Carefully slide the bottom panel assembly into position (the bottom panel goes above the returns on the case side panels), clip the neon, see Fig. 35, into its holder on the back of the control panel as the bottom panel is slid into position. With the control panel cover open, secure the control panel to the side panels with the two countersunk hd. screws previously removed.

   Note: If a programmer is fitted it will be necessary to connect the programmer wiring harness to the rear of the programmer as the bottom panel assembly is slid into position.

9.3 TO REPLACE THE SPARK ELECTRODE OR ELECTRODE LEAD

Refer to Fig. 34.

Spark electrode.

1. Gain general access as described in section 9.1.
2. Disconnect the electrode lead from the spark electrode.
3. Undo the securing nut and remove the electrode, see Fig. 34, from the pilot assembly.
4. Fit the new spark electrode to the pilot assembly securing it in position with the nut.
   Check that the spark gap is 5.0 mm ± 2 mm as shown in Fig. 34.
5. Connect the electrode lead to the spark electrode.
6. Reassemble the boiler as described in section 9.2, paragraphs 1 to 9.
7. Refer to the Lighting Instructions, section 8 and light the boiler.

Electrode lead.

1. Gain general access as described in section 9.1.
2. Disconnect the electrode lead from the spark electrode. Fit the protective sleeve over the new lead.
3. Remove the bottom case seal housing channel (lifts off the chassis). Connect the new lead to the spark electrode. Ensure that the pilot supply and electrode lead are in position in the cut out in the bottom of the chassis and replace the seal housing channel over the bottom of the chassis, ensure it is pushed fully home.
4. Replace the inner case front cover and expansion vessel as described in section 9.2, paragraphs 1 to 5.
5. Remove the four screws securing the control box front cover and carefully swing down the cover.
   Disconnect the electrode lead from the circuit board and withdraw it out of the back of the box. Pass the new electrode lead through the back of the control box and connect it to the circuit board (fit the grommet on the lead in position in the hole). Replace the control box front, securing it with the screws previously removed.
6. Replace the outer front panel and bottom panel assemblies as described in section 9.2, paragraphs, 6 to 9.
7. Refer to the Lighting Instructions, section 8 and light the boiler.

9.4 TO REPLACE THE PILOT INJECTOR

Refer to Fig. 34.

1. Gain general access as described in section 9.1.
2. Remove the bottom case seal housing channel (lifts off the chassis).
3. Undo the securing nut and remove the spark electrode, see Fig. 34, from the pilot assembly.
4. Undo the tubing nuts and disconnect the pilot supply from both the pilot assembly and gas valve.
   Carefully remove the pilot injector, see Fig. 34.
5. Locate the new pilot injector over the end of the pilot supply, as shown in Fig. 34 and carefully position it in the pilot burner. Secure the pilot supply to the pilot assembly and gas valve.
6. Replace the spark electrode and check that the spark gap is 5.0 mm ± 2 mm, see Fig. 34.
7. Ensure that the pilot supply and electrode lead are in position in the cut out in the bottom of the chassis and replace the seal housing channel over the bottom of the chassis, ensure it is pushed fully home..
8. Refer to the Commissioning Instructions, section 4. Light the pilot, check the pilot flame and test the pilot supply for gas soundness.
9. Reassemble the boiler as described in section 9.2 (ignore paragraph 6).
10. Refer to the Lighting Instructions, section 8 and light the boiler.

9. 5 TO REPLACE THE PILOT BURNER

Refer to Fig. 34.

1. Gain general access as described in section 9.1.
2. Remove the screws (four on the 80 model, six on the other models) securing the combustion chamber front cover and remove the cover.
3. Remove the bottom case seal housing channel (lifts off the chassis).
4. Undo the securing nut and remove the spark electrode, see Fig. 34, from the pilot assembly.
5. Undo the tubing nuts and disconnect the pilot supply from both the pilot assembly and gas valve. Carefully remove and retain the pilot injector, see Fig. 34.
6. Remove the two screws (underneath the chassis) securing the small baffle infront of the burner and remove the baffle.
7. Remove the two screws securing the right hand end of the main burner to the chassis. Slide the burner to the right, to remove it from the main injector and withdraw the burner.
8. Remove the two screws securing the pilot burner to the main burner and replace with a new pilot burner.
9. Replace the main burner (ensure that it is located over the injector) then the small baffle infront of it using the screws previously removed.
10. Locate the pilot injector over the end of the pilot supply, as shown in Fig. 34 and carefully position it in the pilot burner. Secure the pilot supply to the pilot assembly and gas valve.
11. Replace the spark electrode and check that the spark gap is 5.0 mm ± 2 mm, see Fig. 34.
12. Ensure that the pilot supply and electrode lead are in position in the cut out in the bottom of the chassis and replace the seal housing channel over the bottom of the chassis, ensure it is pushed fully home.
13. Replace the combustion chamber front cover and secure in position with the screws (four or six) previously removed.
14. Refer to the Commissioning Instructions, section 4. Light the pilot, check the pilot flame and test the pilot supply for gas soundness.
15. Reassemble the boiler as described in section 9.2 (ignore paragraph 6).
16. Refer to the Lighting Instructions, section 8 and light the boiler.

9.6 TO REPLACE THE MAIN BURNER

1. Remove the burner as described in section 9.5, paragraphs 1 to 7.
2. Remove the two screws securing the pilot burner to the main burner and transfer it to the new burner.
3. Replace the new burner and reassemble the boiler as described in section 9.5, paragraphs 8 to 16.

9.7 TO REPLACE THE OVERHEAT CUT-OFF DEVICE

Refer to Fig. 36.

The overheat cut-off device is positioned on the side of the heat exchanger at the front - at the left hand side on the 30, 40, 50 models and at the right hand side on the 60, 80 models.

1. Gain general access as described in section 9.1.
2. Remove the push rod assembly from the cut-off device (lifts off) and disconnect the two leads.
3. Remove the two screws securing the blanking plate at the side of the flue hood and remove the blanking plate.
4. Remove the two screws securing the cut-off device to the heat exchanger.
5. Ensure that the mounting plate is clean and secure the new cut-off device to the heat exchanger.
6. Replace the blanking plate, connect the leads (the polarity is not important) and connect the push rod to the cut-off device (the rubber sleeve locates over the cut-off device button).
7. Reassemble the boiler as described in section 9.2.
8. Refer to the Lighting Instructions, section 8 and light the boiler.

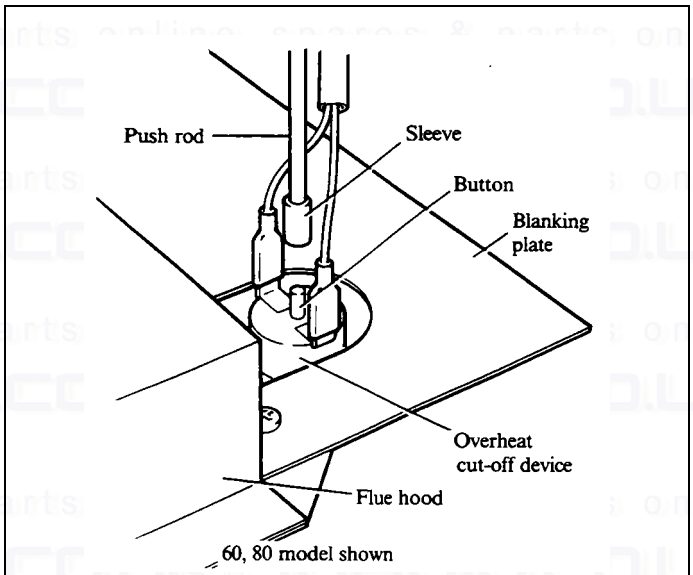

Fig. 36

9.8 TO REPLACE THE FAN

1. Gain general access as described in section 9.1.
2. Remove the two screws securing the fan assembly to the flue hood, see Fig. 33. Carefully slide the fan assembly away from the flue to disengage the flue tube sleeve from the flue. Withdraw the fan assembly, disconnecting the fan motor and pressure switch leads.
   Note: If a Vertex Flue is fitted, slide the flue tube sleeve up into the flue to disengage it from the fan outlet.
3. Remove the four screws securing the fan to the flue turret and remove the fan. Remove the flue tube sleeve from the old fan. Ensure that the 'O' ring is in position on the fan outlet, then fit the flue tube sleeve over the fan outlet and push it fully home. Secure the new fan to the turret with the four screws previously removed.
4. Place the fan assembly on top of the flue hood with the outlet facing towards the flue and reconnect the leads, see Fig. 14a, as follows:
   Two violet leads to the fan motor.
   Yellow lead to pressure switch No connection.
   Red lead to pressure switch Nc connection.
   Black lead to pressure switch C connection.
   With the fan assembly resting on the flue hood engage the flue tube sleeve on the fan outlet into the inner tube of the flue. Ensure that the base of the fan assembly is located under the returns at the rear of the flue hood. (For side exit flue locate the base of the fan assembly under the returns first then slide the fan across into the flue).
   Note: If a Vertex Flue is fitted, slide the flue tube sleeve down out of the flue and over the fan outlet.
   Secure the front of the fan assembly to the flue hood with the two screws previously removed.
5. Reassemble the boiler as described in section 9.2.
6. Refer to the Lighting Instructions, section 8 and light the boiler.

9.9 TO REPLACE THE AIR FLOW PRESSURE SWITCH

The air flow pressure switch is situated on the fan assembly.

1. Gain general access as described in section 9.1.
2. Carefully disconnect the flexible tube and the three leads from the pressure switch.
3. Remove the two screws securing the pressure switch to its mounting bracket. Note which way the pressure switch is secured to the bracket.
4. Secure the new pressure switch to the mounting bracket with the screws previously removed and connect the flexible tube to the **uppermost** tube on the pressure switch.
5. Reconnect the pressure switch leads, see Fig. 14a, as follows:
   Yellow to No, Red to Nc and Black to C.
6. Reassemble the boiler as described in section 9.2.
7. Refer to the Lighting Instructions, section 8 and light the boiler.

9.10 TO REPLACE THE MAIN BURNER INJECTOR

1. Remove the burner as described in section 9.5, paragraphs 1 to 7.
2. Unscrew the main injector from the burner manifold and remove the sealing washer.
3. Screw in a replacement injector using a small amount of jointing compound and a new sealing washer.
4. Replace the burner and reassemble the boiler as described in section 9.5, paragraphs 9 to 16.

9.11 TO REPLACE THE BOILER THERMOSTAT

Refer to Fig. 37.

1. Remove the case as described in section 7.1.
2. Remove the boiler thermostat control knob from the front of the control box (pulls off).
3. Remove the thermostat fixing nut and washer from the front of the control box.
4. Remove the four screws securing the control box front cover and carefully swing down the cover.
5. Withdraw the boiler thermostat and disconnect the three leads, noting their position.
   Orange to terminal 3(C), Brown and Black to terminal 2.
6. Unhook the thermostat capillary from the side of the control box and any retaining clips.
7. Connect the three leads to the new thermostat and position it in the control box front, ensure that the locating tag is located in the small hole and secure in position with the nut and washer previously removed.

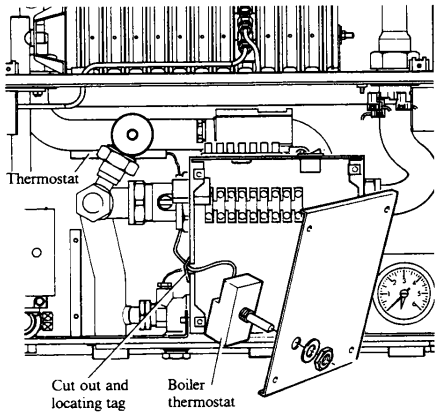

Fig. 37

8. Replace the control box front, routing the capillary the same as the old one and retaining it in position to the side of the control box. Secure the control box front in position with the four of the screws previously removed. Ensure that the boiler thermostat capillary is located in the cut out in the side of the control box.
9. Replace the thermostat control knob.
10. Remove the fixing retaining the thermostat phial and remove the old thermostat.
11. Position the new thermostat phial so it is in contact with the pipe along its full length and retain in position with the fixing previously removed.
12. Replace the case as described in section 7.5.
13. Refer to the Lighting Instructions, section 8. Light the boiler and allow it to heat up. Check that the boiler thermostat switches the boiler off and on when the thermostat is turned to 7.

9.12 TO REPLACE THE COMBUSTION CHAMBER INSULATION PANELS

Refer to Fig. 38 (heat exchanger omitted for clarity).

1. Gain general access as described in section 9.1.
2. Perform paras 2, 3, 4, 5 & 8 of section 7.2.
3. Remove the screws (four on the 80 model, six on the other models) securing the combustion chamber front cover and remove the cover.
4. Slide out the damaged insulation panel(s) and carefully replace with new one(s).
   The rear panel should be lifted up a few mm then pulled forwards out of its bottom locating channel.
   Note: For some models it may be necessary to remove the burner first - refer to section 9.5, paragraphs 3 to 7.
5. If the burner was removed, replace it and reassemble the boiler as described in section 9.5 paragraphs 9 to 16.
   If the burner was not removed, replace the combustion chamber front cover and secure in position with the screws (four or six) previously removed then reassemble the boiler as described in section 9.2.
6. Refer to the Lighting Instructions, section 8 and light the boiler.

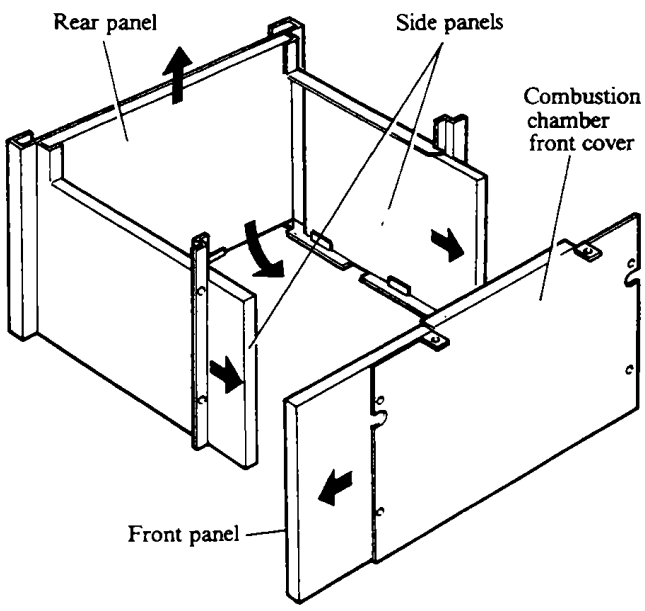

Fig. 38

9. 13 TO REPLACE THE HEAT EXCHANGER

Ensure that the system is drained.

1. Remove the case and completely dismantle the boiler as described in sections 7.1 and 7.2.
2. Drain the system.
   Note: When the system is drained, filled or vented, the manual lever on the right hand side of the diverter valve, see Fig. 27, must be moved to the 'MAN OPEN' (top) position. Return it to its original position after the system has been filled and vented.
3. Remove the two screws securing the overheat cut-off device to the heat exchanger.
4. Undo the two tubing nuts at the bottom of the heat exchanger and remove it from the boiler - lift it up slightly to disengage the pipes and to clear the combustion chamber then withdraw it forwards.
5. Fit the new heat exchanger. Replace the overheat cut-off device and secure in position with the two screws previously removed.
6. Fill the system and vent the boiler as described in section 3.16, paragraphs 2 to 5. Check the heat exchanger connections for water soundness.
7. Reassemble the boiler as described in section 7.4.
8. Refer to the Lighting Instructions, section 8 and light the boiler.

9.14 TO REPLACE THE PUMP OVERRUN THERMOSTAT

The pump overrun thermostat is situated on the base of the chassis, just to the right and above the control box.

1. Gain general access as described in section 9.1, paragraph 1.
2. Remove the screw securing the control box, see Fig. 25 and lower the control box.
3. Disconnect the three wires and remove the two screws securing the thermostat to the chassis.
4. Fit the new thermostat and secure with two screws.
5. Connect the wires to the thermostat - red to terminal 1, yellow to terminal 2 and brown to terminal 3.
6. Reassemble the boiler as described in section 9.2, paragraphs 5 to 9.
7. Refer to the Lighting Instructions, section 8 and light the boiler.
   Allow the boiler to heat up fully then switch it off at the programmer or external controls and check that the pump continues to run for 5 to 15 minutes.

9. 15 TO REPLACE THE GAS VALVE

Refer to Fig. 39.

1. Gain general access as described in section 9.1, paragraph 1.
2. Disconnect the gas valve electrical plug from the valve.
3. Disconnect the pilot supply from the top of the gas valve.
4. Remove the four 3 mm socket screws securing the gas valve to the burner manifold.
5. Remove the screw securing the inlet manifold to the side of the chassis.
6. Undo and disconnect the union at the gas service cock and withdraw the gas valve.
   Remove and discard the 'O' ring in the burner manifold.
7. Remove the four 3 mm socket screws securing the inlet manifold and fit it to the new valve, using a new 'O' ring (both 'O' rings are the same).

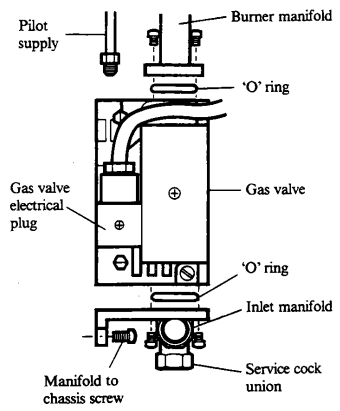

Fig. 39

8. With a new 'O' ring in the burner manifold secure the new valve to the manifold using the four socket screws previously removed.
9. Reconnect the pilot supply, gas service cock union, plug and secure the inlet manifold to the chassis.
10. Open the gas service cock and test the union and inlet manifold to gas valve connection for gas soundness.
11. Refer to the Commissioning Instructions, section 4.3, paragraph 4. Light the boiler and test the pilot supply and burner manifold connections at the gas valve for gas soundness.
12. Reassemble the boiler as described in section 9.2, paragraphs 7 to 9.

9.16 TO REPLACE THE GAS VALVE SOLENOIDS

Refer to Fig. 40.

1. Gain general access as described in section 9.1, paragraph 1.
2. Disconnect the gas valve electrical plug from the valve.
3. Remove the screw securing the solenoids mounting bracket and carefully withdraw the mounting bracket, complete with solenoids, from the valve.
4. Position the new solenoids in the mounting bracket, see Fig. 40 and replace the mounting bracket.
5. Reconnect the plug to the gas valve and reassemble the boiler as described in section 9.2, paragraphs 7 to 9.
6. Refer to the Lighting Instructions, section 8 and light the boiler.

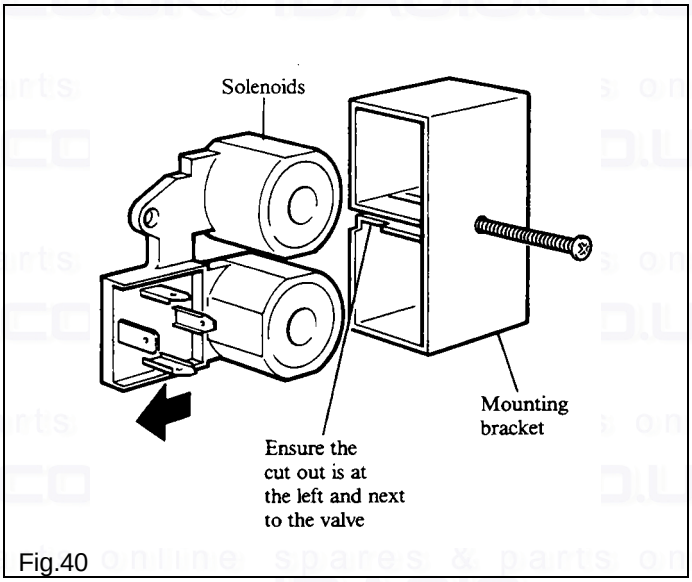

Fig.40

9.17 TO REPLACE THE IGNITION CIRCUIT BOARD

Refer to Fig. 41.

1. Gain general access as described in section 9.1, paragraph 1.
2. Remove the four screws securing the control box front cover and carefully swing down the cover.
3. Disconnect the three wiring connectors and the electrode lead from the circuit board, see Fig. 41.
4. Carefully remove the circuit board from the mounting pillars and replace with a new one.
5. Replace the wiring connectors and the electrode lead.
6. Replace the control box front, ensuring that the boiler thermostat capillary is located in the cut out in the side of the control box and secure it in position with the four screws previously removed.
7. Reassemble the boiler as described in section 9.2, paragraphs 6 to 9.
8. Refer to the Lighting Instructions, section 8 and light the boiler.

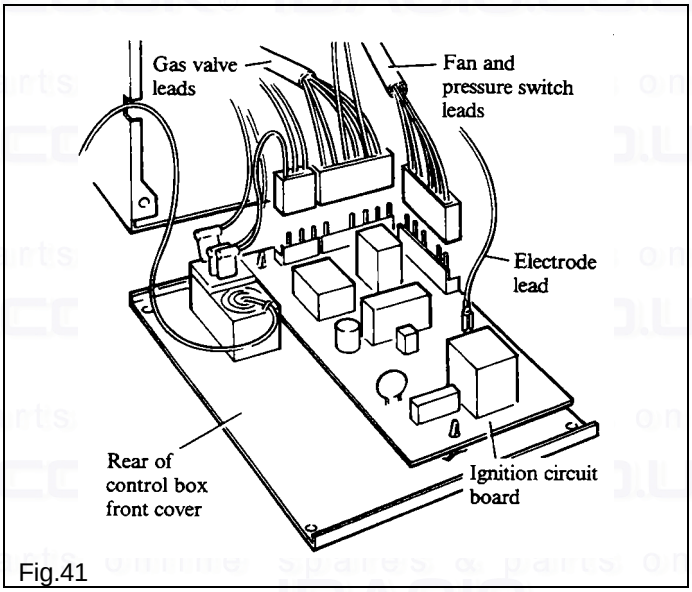

Fig.41

9.18 TO REPLACE THE PUMP

1. Gain general access as described in section 9.1, paragraph 1.
2. Remove the screw securing the control box, see Fig. 25 and lower the control box.
3. Close the two pump isolating valves (closed when the operating spindles are vertical).
4. Place a cloth under the pump as it will contain a small amount of water when removed.
5. Loosen the two pump unions (immediately either side of the pump), taking care not to twist the pipework. Support the pump and remove the two pump unions. Withdraw the pump to provide access to the two wiring cover screws, remove the screws and cover then disconnect the wires.
6. Note which way the pump motor is fitted to the body - the replacement pump motor may have to be removed and rotated to match the old one.
   The arrow on the pump body, indicating the direction of flow must be pointing from left to right.
7. Connect the wires to the new pump - Brown to L, Blue to N and Green/Yellow to then replace the pump using two new sealing washers.
8. Open the pump isolating valves. Vent the pump as described in section 3.16, paragraph 4 and check the pump connections for water soundness.
9. Reassemble the boiler as described in section 9.2, paragraphs 5 to 9.
10. Refer to the Lighting Instructions, section 8 and light the boiler.

9.19 TO REPLACE THE DIVERTER VALVE HEAD

Refer to Fig. 42.

1. Gain general access as described in section 9.1, paragraph 1.
2. Remove the screw securing the control box, see Fig. 25 and lower the control box. To gain extra clearance, disengage the control box hinge pins.
3. Note the position of the manual lever on the right hand side of the diverter valve, then move it to 'MAN OPEN' (top position). Slacken the screw at the left hand side securing the cover and lift off the cover.
4. Remove the two screws securing the diverter valve head to the main body and lift off the head.
5. Disconnect the diverter valve head wires from the terminal block on the top of the control box.
6. Cut the new diverter valve head lead to match the old one.
7. Move the manual lever on the side of the new diverter valve to 'MAN OPEN'.

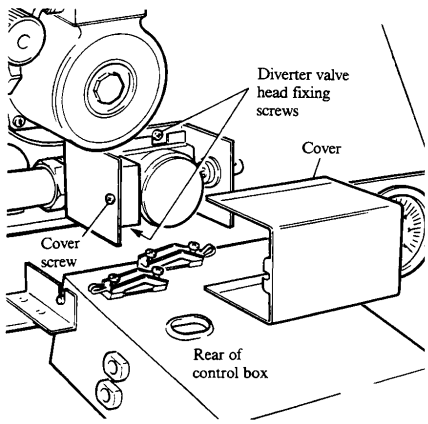

Fig. 42

8. Fit the diverter valve head to the valve body (operating lever at the right hand side), ensuring that the shaft seats correctly. Secure the head in position with the two new screws supplied.
9. Move the manual lever on the right hand side of the new diverter valve to the original position of the old one.
10. Connect the diverter valve head wires to the terminal block on the top of the control box. See wiring diagram on page 41.
11. Re-engage the control box hinge pins and raise the control box securing it in position with the screw previously removed.
12. Reassemble the boiler as described in section 9.2, paragraphs 6 to 9.
13. Refer to the Lighting Instructions, section 8 and light the boiler.

9. 20 TO REPLACE THE PRESSURE GAUGE

Refer to Fig. 43.

1. Gain general access as described in section 9.1, paragraph 1.
2. Remove the screw securing the control box, see Fig. 25 and lower the control box.
3. Drain the system.
   Note: When the system is drained, filled or vented, the manual lever on the right hand side of the diverter valve, see Fig. 27, must be moved to the 'MAN OPEN' (top) position. Return it to its original position after the system has been filled and vented.
4. Remove the pressure sensor capillary from the safety valve body.
5. Compress the clips on the body of the gauge and push it out of the panel, withdrawing the capillary.
6. Fit the new pressure gauge and connect the sensor to the safety valve using a new sealing washer.

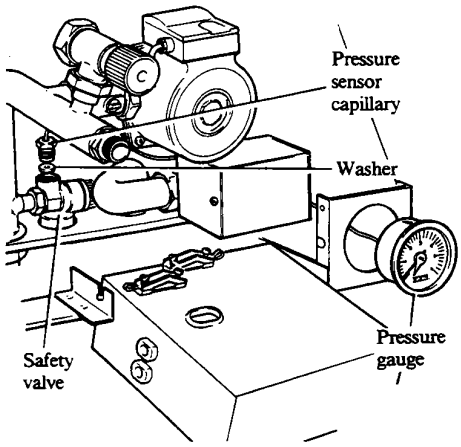

Fig. 43

7. Fill the system and vent the boiler as described in section 3.16, paragraphs 2 to 5. Check the pressure sensor connection for water soundness.
8. Reassemble the boiler as described in section 9.2, paragraphs 5 to 9.
9. Refer to the Lighting Instructions, section 8 and light the boiler.

9.21 TO REPLACE THE SAFETY VALVE

Refer to Fig. 44.

1. Gain general access as described in section 9.1, paragraph 1.
2. Remove the screw securing the control box, see Fig. 25 and lower the control box.
3. Drain the system.
   Note: When the system is drained, filled or vented, the manual lever on the right hand side of the diverter valve, see Fig. 27, must be moved to the 'MAN OPEN' (top) position. Return it to its original position after the system has been filled and vented.
4. Remove the pressure sensor capillary from the safety valve body.
5. Disconnect the flexible pipe at the opposite end to the expansion vessel. This is a hand screwed connection with an 'O' ring seal.
6. Undo the left hand pump union.
7. Undo the union underneath the by-pass valve.
8. Undo the 28 mm system return connection below the boiler.
9. Undo the 15 mm safety valve discharge connection below the boiler.
10. Remove the backnut and washer securing the system return pipe to the manifold bracket and withdraw the pipe complete with the safety valve attached.
11. Undo the union and remove the safety valve from the pipe.
12. Fit a new safety valve and reassemble with new sealing washers.
13. Fill the system and vent the boiler as described in section 3.16, paragraphs 2 to 5. Check the safety valve connections for water soundness.
14. Reassemble the boiler as described in section 9.2, paragraphs 5 to 9.
15. Refer to the Lighting Instructions, section 8 and light the boiler.

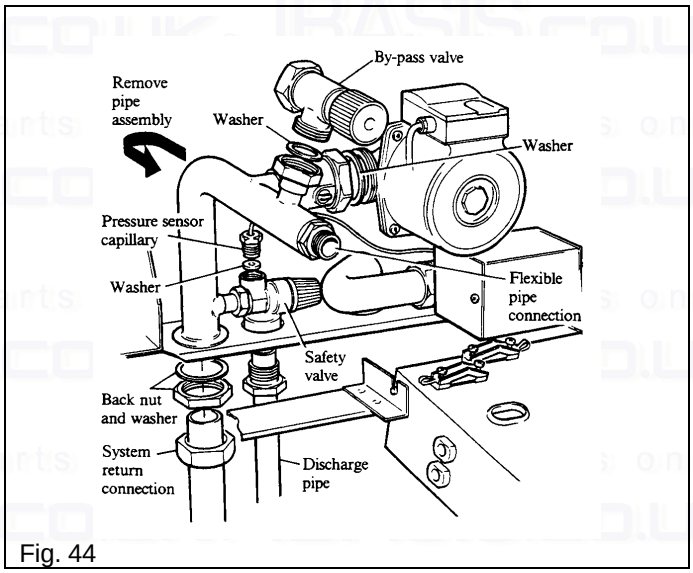

Fig. 44

9.22 TO REPLACE THE BY-PASS VALVE

Ensure that the system is drained.

The by-pass valve is positioned to the left of the pump. The valve is pre-set for each particular model, ensure the boiler model is quoted when ordering a spare.

1. Gain general access as described in section 9.1, paragraph 1.
2. Drain the system.
   Note: When the system is drained, filled or vented, the manual lever on the right hand side of the diverter valve, see Fig. 27, must be moved to the 'MAN OPEN' (top) position. Return it to its original position after the system has been filled and vented.
3. To gain access to the rear by-pass valve union, the pump may have to be removed. Refer to section 9.18, paragraphs 2, 4 and 5. However, it is possible to access the union using a long stemmed spanner.
4. Undo the union below the by-pass valve, then undo the union securing the 15 mm pipe on the back of the valve to the main heat exchanger pipe. Take care not to twist the pipework. Remove the valve and transfer the 15 mm pipe to the new valve using a new washer.
5. Fit the new valve, using a new washer at the bottom connection.
   Note: The spare by-pass valve is pre-set and **must not** be adjusted.
6. Reconnect the wires to the pump - Brown to L, Blue to N and Green/Yellow to , then replace the pump using two new sealing washers.
7. Fill and vent the boiler as described in section 3.16, paragraphs 2 to 5. Check the unions for water soundness.
8. Reassemble the boiler as described in section 9.2, paragraphs 5 to 9.
9. Refer to the Lighting Instructions, section 8 and light the boiler.

9.23 TO REPLACE THE TEST SWITCH

Ensure that the electricity supply is off.

1. Remove the case as described in section 7.1.
2. Remove the four screws securing the control box front cover and carefully swing down the cover.
3. Disconnect the push-on terminals from the switch.
4. Note which way the switch is fitted (the end terminal should be at the right hand side, next to the 1 on the label), then compress the clips on the switch body and push it out of the control box.
5. Fit the new switch and connect the wires. The Orange wire must go to the end terminal (right hand side next to 1 on the label) and the white wire to the centre terminal.
6. Replace the control box front and secure in position with the four screws previously removed. Ensure that the boiler thermostat capillary is located in the cut out in the side of the control box.
7. Replace the case as described in section 7.5.
8. Refer to the Lighting Instructions, section 8 and light the boiler.

9.24 TO REPLACE THE NEON INDICATOR

Ensure that the electricity supply is off.

1. Remove the case as described in section 7.1.
2. Remove the screw securing the control box, see Fig. 25 and lower the control box.
3. Disconnect the neon wires from the terminal block on the top of the control box. Connect the new neon wires to the same connections, see wiring diagram on page 41. The polarity of the wires is not important.
4. Raise the control box and secure in position with the screw previously removed.
5. Replace the case as described in section 7.5.
6. Refer to the Lighting Instructions, section 8. Light the boiler and check the controls.

9.25 TO REPLACE THE EXPANSION VESSEL

Ensure that the system is drained.

1. Gain general access as described in section 9.1, paragraph 1.
2. Drain the system.
   Note: When the system is drained, filled or vented, the manual lever on the right hand side of the diverter valve, see Fig. 27, must be moved to the 'MAN OPEN' (top) position. Return it to its original position after the system has been filled and vented.
3. Remove the screw securing the control box, see Fig. 25 and lower the control box.
4. Remove the two tie rods from the retaining clips on the front of the expansion vessel frame and remove the split pins from the ends of the rods. Remove the two screws securing the expansion vessel support frame to the inner case front panel. Hook the plain ends of the tie rods into the brackets on the sides of the boiler. Lower the assembly (hinged at the bottom). Locate the other ends of the tie rods in the brackets on the expansion vessel frame, then pass the split pins through the ends of the rods to secure them in place. See Fig. 32. Disconnect the flexible pipe from the expansion vessel and remove the vessel.
5. Position the new vessel in the frame with the connection point uppermost and towards the boiler, see Fig. 26 and connect the flexible pipe using a new washer.
6. Remove the split pins from the ends of the tie rods and unhook them from the support frame, raise the expansion vessel assembly and secure the frame to the inner case front panel using the two screws previously removed. Unhook the tie rods from the sides of the boiler, replace the split pins into the rods and position them in the retaining clips on the front of the expansion vessel frame.
7. Fill the system and vent the boiler as described in section 3.16, paragraphs 2 to 5. Check the expansion vessel connection for water soundness.
8. Reassemble the boiler as described in section 9.2, paragraphs 6 to 9.
9. Refer to the Lighting Instructions, section 8 and light the boiler.

9.26 TO REPLACE THE PROGRAMMER (IF FITTED)

Ensure that the electricity supply is off.

1. With the control panel cover open, remove the two screws (one each side) securing the control panel to the case side panels.
2. Remove the four screws securing the bottom panel assembly (two each side) to the case side panels. Carefully slide out the assembly away from the boiler, unclipping the neon from the back of the control panel, see Fig. 35, before fully withdrawing the assembly.
   Note: Disconnect the wiring harness from the rear of the programmer before fully withdrawing the bottom panel assembly.
3. Remove the two screws securing the bottom of the programmer to the back of the control panel. Swing the programmer up and unclip it from the top brackets.
4. Fit the new programmer to the back of the control panel, locating the top two hinge pins into the brackets above the opening then lowering it against the panel and securing it at the bottom using the two screws supplied with the programmer.
5. Carefully slide the bottom panel assembly into position (the bottom panel goes above the returns on the case side panels), clip the neon, see Fig. 35, into its holder on the back of the control panel as the bottom panel is slid into position. Secure the bottom panel to the side panels using the four screws previously removed. With the control panel cover open, secure the control panel to the side panels with the two countersunk hd. screws previously removed.
   Note: Connect the programmer wiring harness to the rear of the programmer as the bottom panel is slid into position.
6. Switch on the electricity supply, refer to the Programmer instructions and set the timer and programmes.
7. Refer to the Lighting Instructions, section 8. Light the boiler and check the controls.

10. WIRING DIAGRAMS - PAGE 41

a. Illustrated wiring diagram

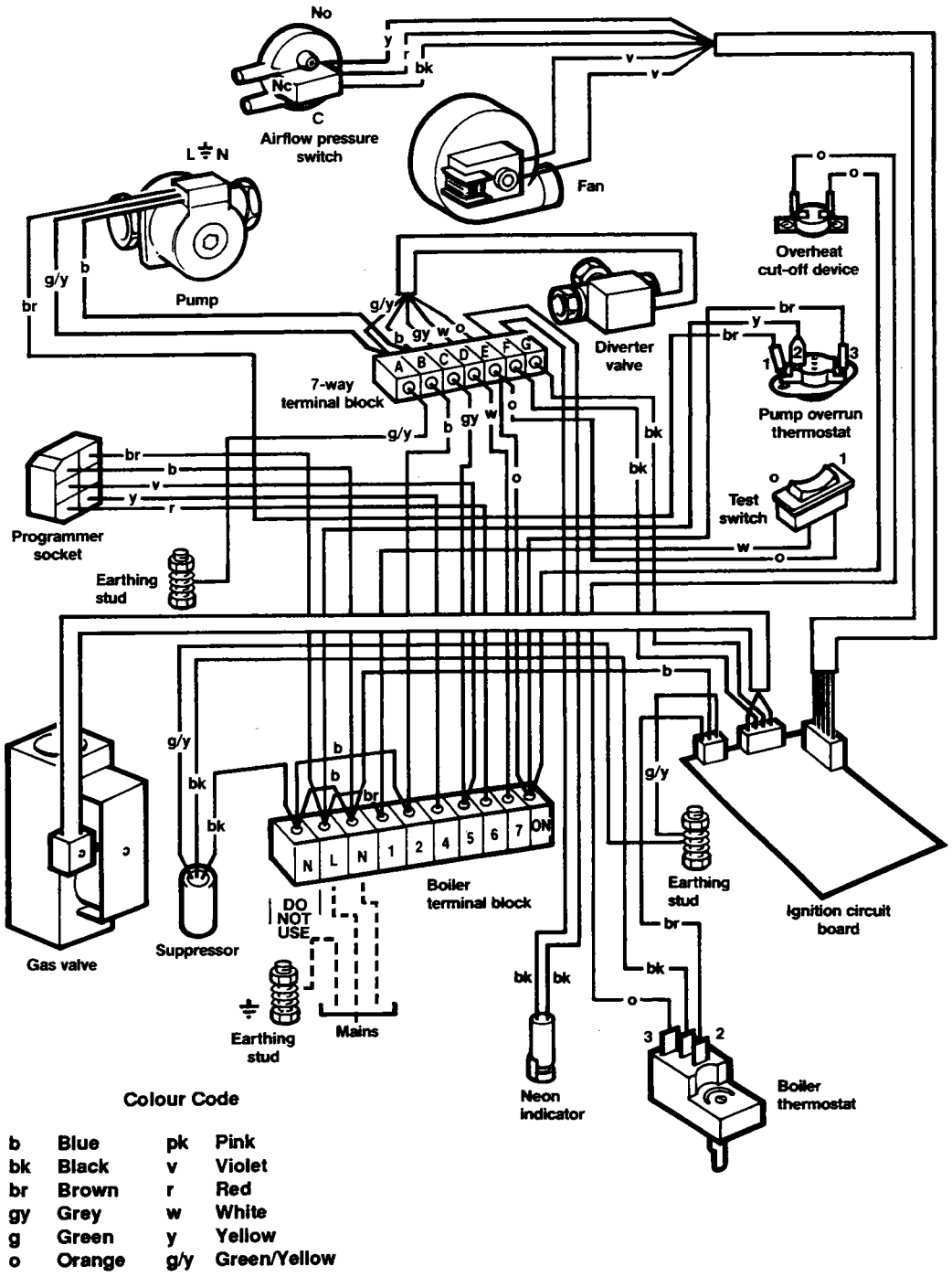

Note: Always set the Test Switch to the O (off) position if a programmer is used before the case is fitted.

b. Functional flow wiring diagram

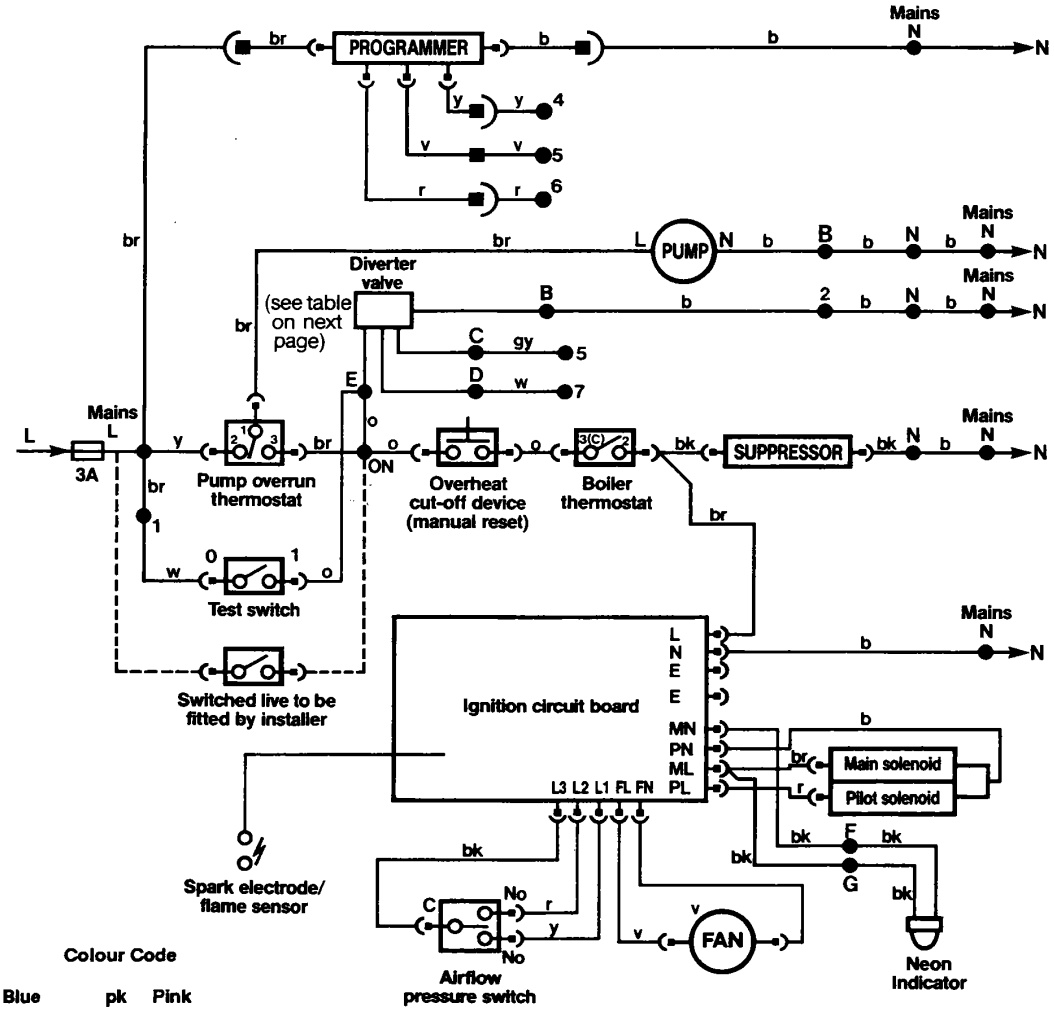

Colour Code

b	Blue	pk	Pink
bk	Black	v	Violet
br	Brown	r	Red
gy	Grey	w	White
g	Green	y	Yellow
o	Orange	g/y	Green/Yellow

Note: Always set the Test Switch to the O (off) position if a programmer is used before the case is fitted.

c. Room and cylinder thermostat connections

	Sensomatic PRT 2	Landis & Gyr RAD 1	Drayton Room Stat	Sunvic TLX 2259	Honeywell T 6160 B	
Room thermostat terminals	TL	1	1	3	1	→ 6
	N		4	4	2	→ 2
	H	2	2	1	3	→ 7
				E		→ ⏚

	Sensomatic PTT 2	Landis & Gyr RAM 1	Drayton CS 2	Sunvic SA 1452	Honeywell L 641 A	
Cylinder thermostat terminals	H	2	2	1	1	→ ON
	C	3	3	2	2	→ 5
	TL	1	1	3	C	→ 4
		E	E	4		→ ⏚
	N					→ 2
	L					→ 1

The number at the end of the arrow (connection) represents a terminal in the boiler terminal block

.1. FAULT FINDING GUIDE - PAGE 43

Preliminary electrical system checks i.e. Earth Continuity, Short Circuit, Polarity and Resistance to earth are the first electrical checks to be carried out during a fault finding procedure. On completion of the service/fault finding task which has required the breaking and remaking of electrical connections, then the checks - Earth Continuity, Short Circuit, Polarity and Resistance to earth - must be repeated.

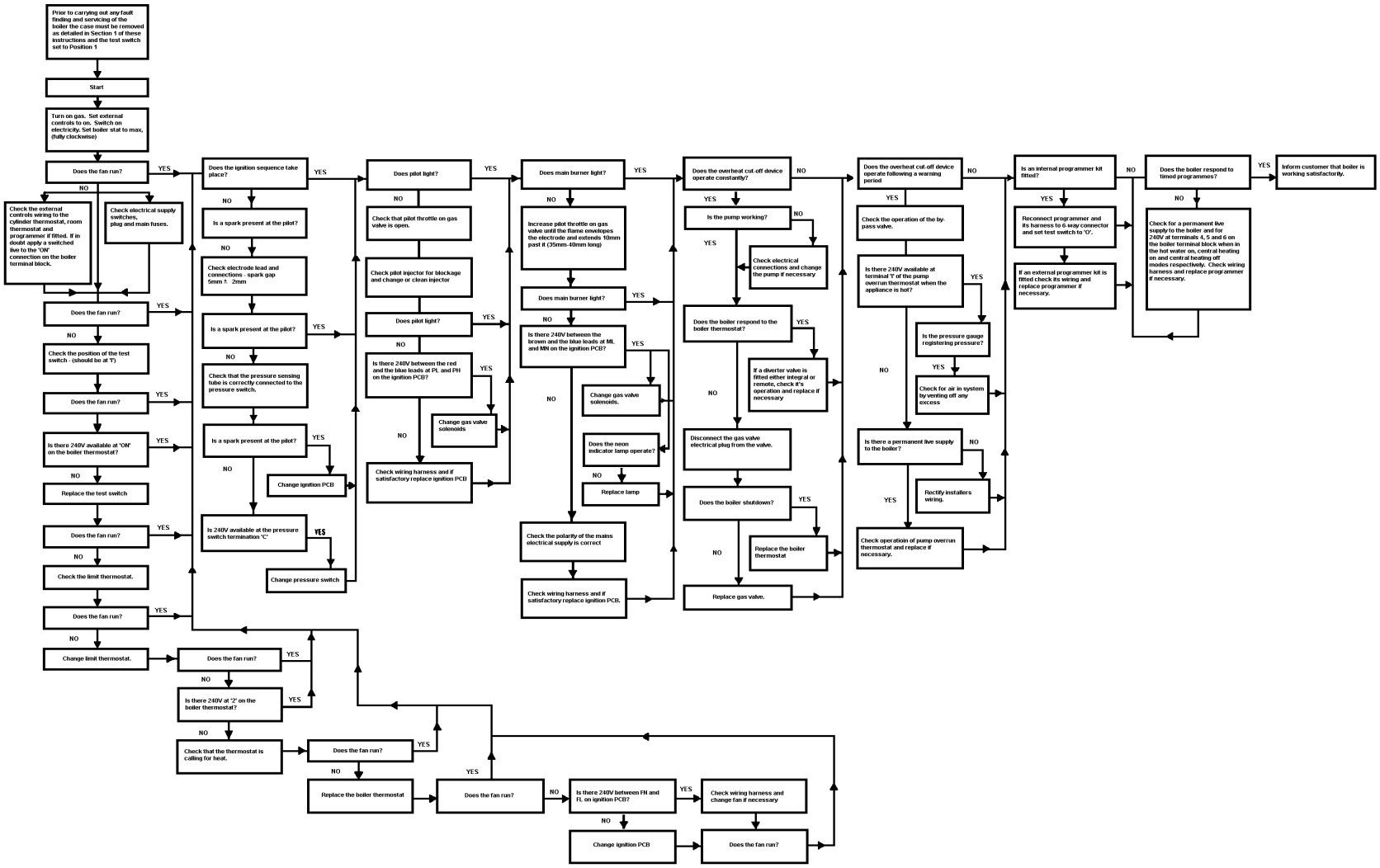

12. EXPLODED VIEW - PAGE 44

Ultra Dv 50 shown - other models similar

spares & parts online IBASIS.CO.UK ©

13. SHORT LIST SPARE PARTS - PAGE 45

See next page for list of parts

SHORT LIST SPARE PARTS - PAGE 46

Key No.	GC No.	Description	Qty.	Part No.
15		Thermostat Knob	1	929079
27		Fan Assembly - DV30	1	929013
27		Fan Assembly - DV40	1	929014
27		Fan Assembly - DV50	1	929015
27		Fan Assembly - DV60	1	929016
27		Fan Assembly - DV80	1	929017
28		Pressure Switch	1	929020
38	127 218	Burner - 5 Blade - DV30	1	929060
38	127 219	Burner - 7 Blade - DV40	1	929061
38	127 220	Burner - 9 Blade - DV50	1	929062
38	127 221	Burner - 11 Blade - DV60	1	929063
38	127 222	Burner - 12 Blade - DV80	1	929064
63		Isolating Valve Assembly 28mm	2	929029
65		Pump Myson SD51 - DV30, 40, 50	1	929031
65		Pump Myson SD61 - DV60, 80	1	929032
66	397 677	Safety Valve c/w Washer	1	929033
68		Diverter Valve 22mm, Honeywell V4073A1098 (DV30 - 60)	1	929035
68		Diverter Valve 28mm, Honeywell V4073A1104 (DV80)	1	929036
79		Pilot Injector	1	929001
81		Spark Electrode	1	929008
82		Electrode Lead	1	929009
83	386 674	Gas Control Valve - SIT 0.830.020	1	929010
87		O Ring	2	929011
88		Burner Injector - DV30 - Bray 23.800	1	929002
88		Burner Injector - DV40 - Bray 23.1100	1	929003
88		Burner Injector - DV50 - Bray 23.1350	1	929004
88		Burner Injector - DV60 - Bray 23.1700	1	929005
88		Burner Injector - DV80 - Bray 23.2400	1	929006
89	323 468	Washer	1	929230
90	381 865	Pilot Burner	1	402947
95		Tubing Nut, 4mm	1	402938
96		Olive, 4mm	1	402940
98		Gasket	1	929098
104		Pressure Gauge c/w Washer	1	929065
108	384 208	Pump Overrun Thermostat - 60T13-60073	1	929021
109		Ignition P.C.B.	1	929024
122		Boiler Thermostat c/w Nut & Washer - K36 P1320	1	929218
123		Overheat Thermostat - 36TXE 26-2567	1	929023

When ordering spare parts, always quote the boiler model and serial number - see boiler Serial No. label on the inner front of the control box.

Back Page