POTTERTON

Prima C

30C, 40C, 50C & 60C
open flue gas fired boiler

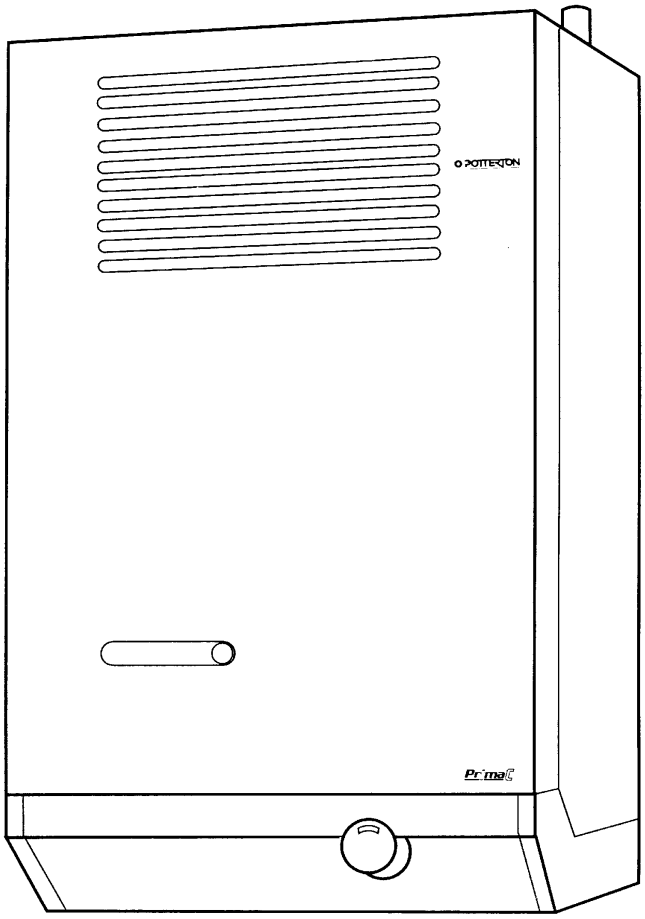

FOR USE WITH NATURAL GAS (G20) ONLY

Read these instructions thoroughly before working on the boiler.
Leave the instructions adjacent to the gas meter.

spares & parts online IBASIS.CO.UK

GAD (90/396/EEC)

POTTERTON PRIMA 30C G.C. No. 41.605.90
POTTERTON PRIMA 40C G.C. No. 41.605.91
POTTERTON PRIMA 50C G.C. No. 41.605.92
POTTERTON PRIMA 60C G.C. No. 41.605.93

IMPORTANT

This appliance must be installed by a competent person as stated in the Gas Safety (Installation and Use) Regulations 1994.

Prima boilers are certified for safety, it is therefore important that no external control devices (eg. flue dampers, economisers etc.) be directly connected to these appliances unless covered by these installation instructions or otherwise recommended in writing. Any direct connection of a control device not approved by Potterton Myson could invalidate the certification and the normal warranty.

LIST OF CONTENTS

General	Page No. 2	Installation Instructions	Page No.13
Accessories	Page No. 3	Commissioning	Page No.19
Installation Data	Page No. 3	Servicing Instructions	Page No.21
Boiler Dimensions	Page No. 3	Health and Safety Information	Back Page
Site Requirements	Page No. 5	Control Systems }	Supplied in
Technical Data	Page No. 7	Pipework and Wiring Guide }	Literature pack
		Users Instructions }	

GENERAL

Once the pilot has been lit Potterton Prima C boilers are automatic in operation. They are wall mounted natural draught open flue appliances using a cast iron heat exchanger and are available in four outputs ranging from 5.86-17.58kW (20,000-60,000 Btu/h).

The boilers which are designed to provide domestic hot water and/or central heating must be used on INDIRECT hot water systems only.

The cast iron heat exchanger is suitable for use on open vented gravity hot water/ pumped central systems or fully pumped systems which may be sealed or open vented.

ACCESSORIES - Page 3

The following range of Potterton Myson system controls are also available and further information will be provided on request.
Electronic Programmer EP2001, EP3001, EP4001, EP5001 and EP6000.
Programmable Electronic Thermostat PET1
Thermostatic Radiator Valve.
Electronic Cylinder Thermostat PTT2 or PTT100
Electronic Room Thermostat PRT2 or PRT100
Motorised Zone Valve MSV222 or MSV228
Motorised Diverter Valve MSV322

INSTALLATION DATA - Page 3

The installation of the boiler must be in accordance with the latest relevant requirements of the Gas Safety (Installation and Use) Regulations 1994, local building regulations, IEE Wiring Regulations and the byelaws of the local Water Undertaking.

Detailed recommendations are contained in the following British Standard Codes of Practice:-

BS6798. BS5440 Part 1.
BS5440 Part 2. BS55449 Part 1.
BS5546, BS4814,
BS6891 BUILDING REGULATIONS.
MODEL WATER BYELAWS.
BRITISH GAS PUBLICATION DM2.
GAS SAFETY (INSTALLATION AND USE) REGULATIONS 1994.
BUILDING STANDARDS (SCOTLAND) REGULATIONS.

BOILER DIMENSIONS - Page 3

Figure 1 BOILER DIMENSIONS (mm)

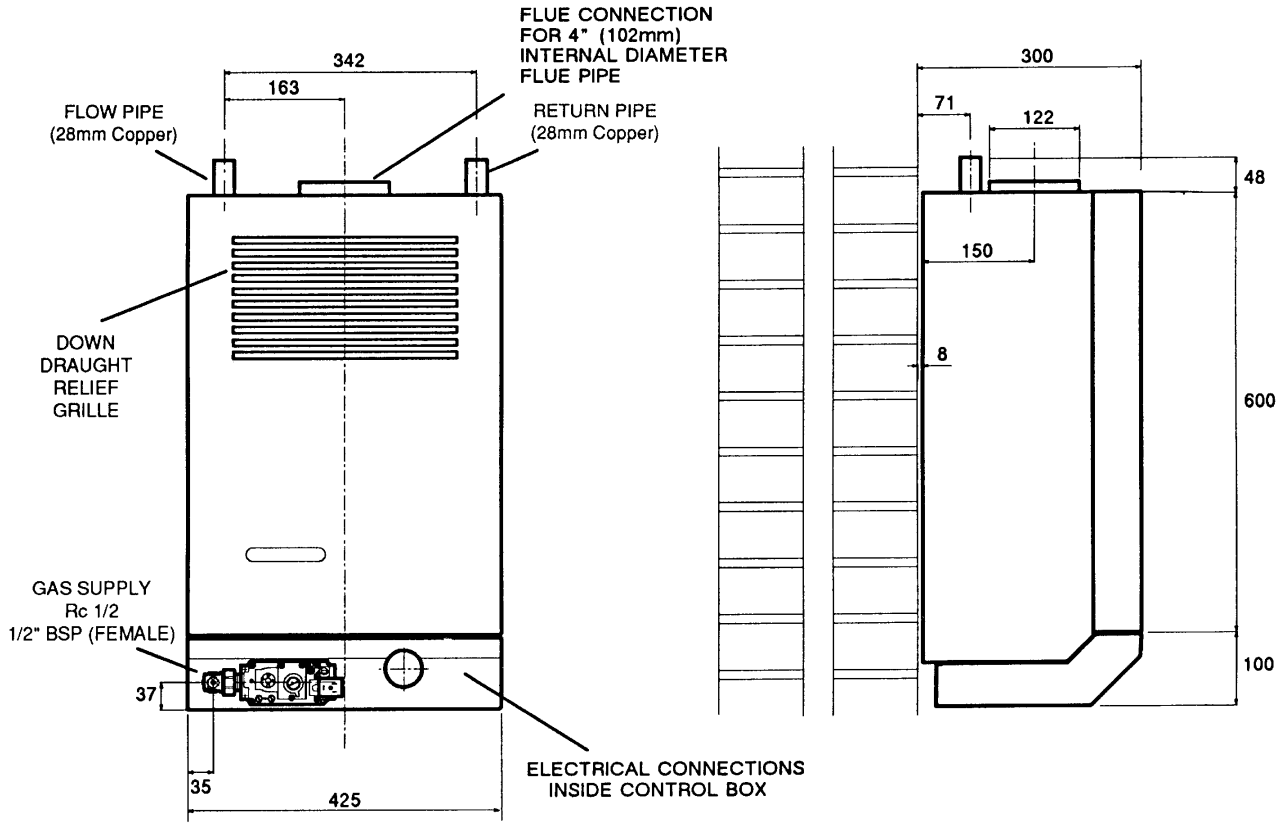

Figure 2 - GENERAL ARRANGEMENT

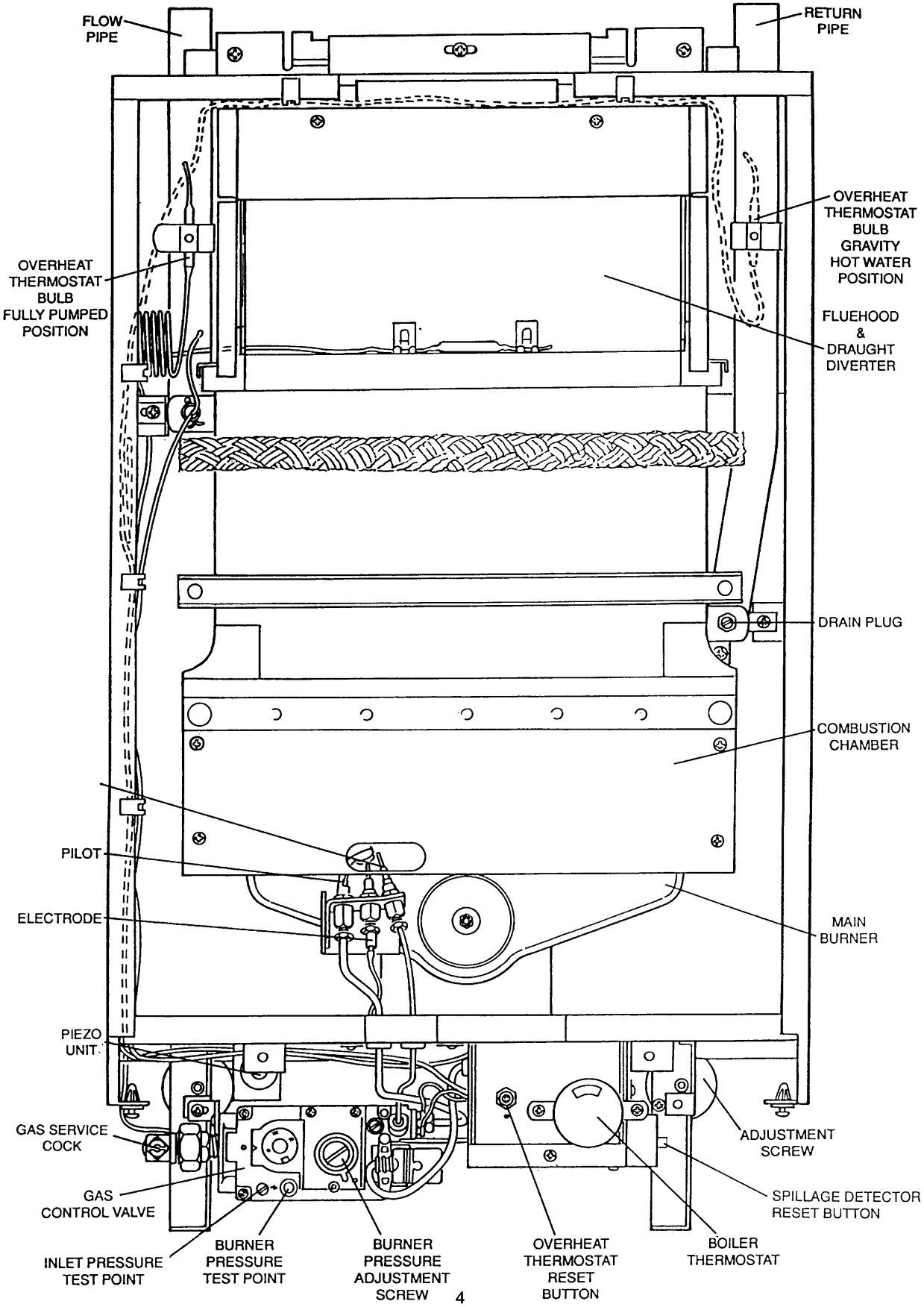

SITE REQUIREMENTS - Page 5

These boilers are not suitable for external installation. The appliance must not be installed in bathrooms, shower rooms, bedrooms, bed-sitting rooms, garages or rooms where highly inflammable materials or vapours are likely to be present. Fitting in toilets or cloakrooms is not recommended but is permitted, provided the combustion air is taken direct from outside. Where installation of the boiler will be in an unusual location special procedures may be necessary and BS6798 gives detailed guidance in this aspect.

Ensure that the gas supply pipe and meter are large enough for this appliance and any others that may be run off the same meter. Reference should be made to BS6891

Boiler Mounting Surface.
The boiler must be mounted on a flat wall, which may be of combustible material and must be sufficiently robust to take the weight of the boiler. It is recommended that any wall covering behind the boiler that may discolour should be removed before mounting the boiler. The requirements of the local authorities and the Building Regulations must be adhered to.

IMPORTANT NOTICE:
TIMBER FRAMED HOUSES
If the appliance is to be fitted in a timber framed building, it should be fitted in accordance with British Gas Publication 'Operational Procedures for Customer Service' Part 19. If in any doubt, advice should be sought from the local region of British Gas.

Clearances Around the Boiler
This appliance must at all times be fitted more than 100mm (4in) above floor level.
The following minimum clearances must be maintained after installation for correct operation and servicing of the boiler:-
610mm (2ft) at the front of the boiler.
5mm (0.2in) each side of the boiler.
100mm (4in) at the top.
100mm (4in) at the bottom where fitted above a working surface etc.
Additional clearances to these may be required for installation and are left to the discretion of the installer.

Combustion Air and Ventilation Requirements
General recommendations are given in BS5440 Part 2, and the following notes are given as a general guide.

1. Ventilation of Compartments containing Gas Boilers
THE 60C IS NOT SUITABLE FOR INSTALLATION IN A COMPARTMENT.

For other models there should be two permanent air vents, one at low level and one at high level. Each opening, whether left free or furnished with a grille, must have a minimum effective area in accordance with Table 1.

TABLE 1

Level of Air Vent		Area for air whether taken from a Room or Outside	
		sq. in.	sq. cm.
30C	High	38	245
	Low	38	245
40C	High	52	335
	Low	52	335
50C	High	66	425
	Low	66	425

There must be at least 300mm (l2in) clearance between the grille on the front of the boiler casing and any internal surface of the cupboard to allow for adequate air for operation of the draught diverter.
Further details for installation of a boiler within a compartment are given in BS6798.

2. Ventilation of rooms containing Gas Boilers.

The ventilation of the room containing the boiler shall include air for combustion and draught diverter dilution. This applies also when the boiler is sited in a compartment, unless the air vents are both direct from outside.
A permanent air vent shall be provided in an outside wall of the building at either high or low level.

This opening may be:

a Directly into the room or space containing the boiler or,

b Via a duct through the wall or roof of the room, (where such a method is considered British Gas should be consulted) or,

c Into an adjacent room or space which has an internal permanent air vent of the same size to the room containing the boiler. It is undesirable to ventilate via a kitchen, bathroom or toilet.

The air vent should be sited as far as possible from any extract fan to avoid short circuiting. To avoid the possibility of freezing water pipes, the vent should not be sited near pipes. The minimum effective area of the permanent air vent must be:

30C	22 sq cm	3.4 sq in
40C	39 sq cm	6.0 sq in
50C	56 sq cm	8.7 sq in
60C	74 sq cm	11.5 sq in

If the room (e.g. kitchen) from which air is drawn, has an extract fan fitted, then the opening size of the permanent air vent should take this into account to ensure that the operation of the boiler flue is not adversely affected when the extract fan is running with all doors and windows closed. This should be checked in accordance with BS5440 Parts 1 and 2.

3. Grilles and Ducts

Any grille and/or duct should be so sited and of a type not to become easily blocked or flooded and should offer low resistance to air flow.

FLUE

A 100mm (4in) internal diameter flue must be connected to this appliance to evacuate the products of combustion from the boiler. The flue connecting socket on the boiler is designed to accept flue pipe to BS567.

If a fluepipe to BS715 is to be used an adaptor must be fitted to the boiler connecting socket.

Reference should be made to The Building Regulations and British Standard 5440 Part 1. The following notes have been compiled for your guidance:-

a The flue pipe should be at least 25mm from any combustible material, or when passing through a wall, floor or roof, be separated from any combustible material by a non-combustible sleeve enclosing an air space of at least 25mm around the flue pipe.

b Ideally a flue should rise vertically to a termination point which is unaffected by down draught or wind eddies. Therefore, for practical purposes, the flue should have the shortest run possible; 90° bends should be avoided. The terminal should be at least above roof edge level and must be of a type acceptable to British Gas.

c Wherever possible there should be at least 600mm (2ft) of vertical flue from the boiler flue socket. Note; A split socket should be fitted in this length.

d Horizontal runs should be avoided. If a near horizontal length is unavoidable, it must be followed by at least twice that length of vertical flue.

e Wherever possible internal stacks, lined if necessary, should be used.

f All brick chimneys must be lined with a liner acceptable to British Gas.

g Where condensation is likely a means of draining must be provided.

h If an existing flue is being used, ensure that it has been thoroughly swept before lining or connecting the boiler.

ELECTRICITY SUPPLY - Page 7

A 240 volts ~ 50Hz. single phase electricity supply fused at 3A must be provided in accordance with the latest edition of the IEE wiring regulations and any other local regulations that may apply. The current rating of the wiring to the boiler must exceed 3 amperes and have a cross sectional area of at least 0.75mm^2 in accordance with BS6500 1990 Table 16. The method of connection to the electricity supply MUST facilitate complete isolation of the appliance, preferably by the use of a fused three pin plug and unswitched, shuttered socket outlet, both complying with the requirements of BS1363. Alternatively, connection may be made via a fused double pole isolator having a contact seperation of 3mm in all poles and serving the appliance and system controls only.

TECHNICAL DATA - Page 7

Boiler Type	B11Bs
Maximum Working Head	30.5m (l00ft)
Minimum Working Head (Fully pumped systems)	150mm (6in)
Minimum Circulating Head (Gravity systems)	1.2m (4ft)
Gas Supply Pressure	20 mbar
Maximum Flow Temperature	82°C
Electricity Supply	240v ~ 50Hz fused at 3A
Flow/Return Connection	28mm copper
Gas Supply Connection	Rc, ½ (½ in BSP Female)
Power Consumption	20 watts

	30 & 40 model	50 & 60 model
Water Content	1.8 litre 0.4 gal	2.5 litre 0.55 gal
Appliance Weight - installed	36.3 kg 80.0 lbs	44.0kg 97.0 lbs
Appliance Weight - lift	31.0kg	38.5 kg

BOILER SIZE	INJECTOR SIZE	GAS RATE m3/h (ft3/h)	INPUT Kw(Btu/h)	OUTPUT kW(Btu/h)	BURNER PRESSURE Mbar	in wg
Min		0.76 (26.84)	8.20 (27978)	5.86 (20,000)	7.8	3.1
30	2.6mm	0.95 (33.54)	10.18 (34734)	7.33 (25,000)	11.8	4.7
Max		1.09 (38.49)	11.72 (40000)	8.79 (30,000)	15.7	6.3
Min		1.15 (40.51)	12.29 (41930)	8.79 (30,000)	9.5	3.8
40	3.1mm	1.33 (46.98)	14.25 (48620)	10.26 (35,000)	12.7	5.1
Max		1.46 (51.49)	15.62 (53295)	11.72 (40,000)	15.3	6.1
Min		1.47 (51.90)	15.74 (53700)	11.72 (40,000)	9.3	3.8
50	3.55mm	1.65 (58.36)	17.70 (60400)	13.19 (45,000)	11.6	4.7
Max		1.81 (64.00)	19.41 (66225)	14.7 (50,000)	14.2	5.7
Min		1.86 (65.68)	19.9 (68000)	14.7 (50,000)	10.8	4.3
60	3.8mm	2.01 (70.97)	21.60 (73800)	16.12 (55,000)	13.0	5.2
Max		2.17 (76.62)	23.3 (79500)	17.6 (60,000)	15.2	6.1

Circulation Pump Selection

The resistance through the heat exchangers when operating with a water flow rate producing an 11°C temperature rise at maximum boiler output is shown in TABLE 2. If other controls, such as three-position valves are used in the system, the resistance through them, quoted in their manufacturers literature must be taken into account. The pump may be fitted on either the flow or return and on FULLY PUMPED systems MUST be wired directly to the boiler terminal block, see Fig 14.It must be fitted with two isolating valves which are positioned as close to the pump as possible. Isolation of the valves must always leave the open vent unobstructed.

TABLE 2

Boiler size	Water Flow Rate		Boiler Resistance Without Disk		Boiler Resistance With Disk	
	Litres/min	gal/min	kN/m	in wg	kN/m	in wg
30	11.37	2.5	0.63	2.5	1.75	7.0
40	15.18	3.34	1.13	4.5	3.0	12.0
50	18.96	4.17	1.75	7.0	4.5	18.0
60	22.73	5.0	2.5	10.0	6.25	25.0

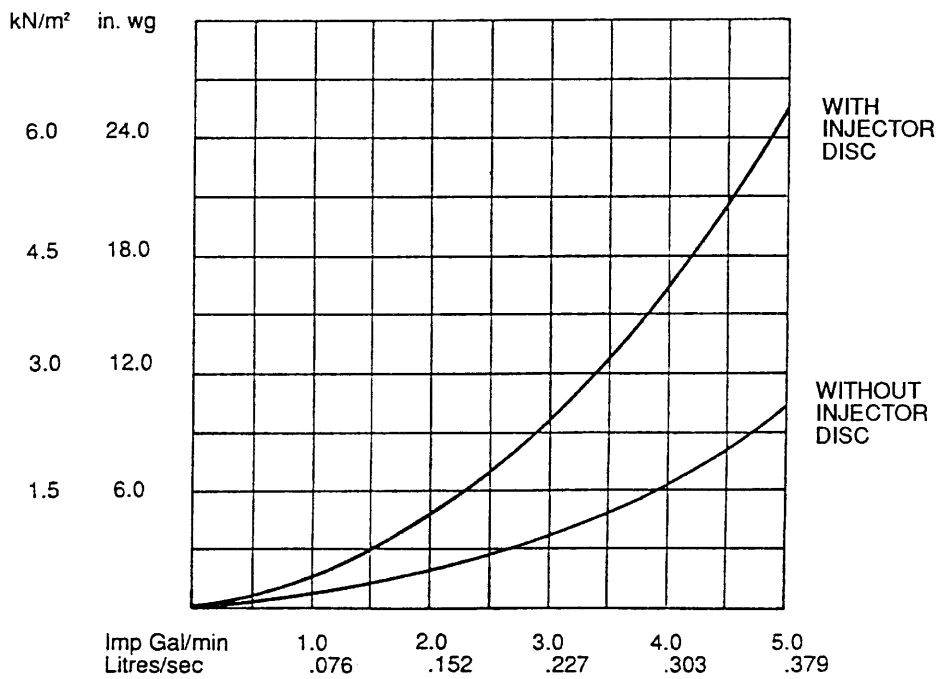

Figure 3 PRESSURE LOSS ACROSS BOILER

THE SYSTEM

The boiler must be used on INDIRECT hot water systems only. It is suitable for use on open vented gravity hot water/pumped central heating systems or fully pumped systems which may be sealed or open vented

The system should be designed so that the maximum static head does not exceed 30.5m (l00ft) and a minimum on fully pumped systems of 150mm (6in). See Fig 4.
Gravity domestic hot water circuits should have a minimum circulating head of 1.2m (4ft). See Fig 5. Excessive horizontal runs should be avoided, but if this is not possible the circulating head should be increased.

If the boiler is to be used on a system with gravity hot water the bulb of the overheat thermostat should be repositioned as shown on Fig 2.

To prevent reverse circulation in the gravity circuit when the pump is running an injector disc is provided to form an injector tee at the return connection on the boiler. See Fig 11.

To prevent nuisance operation of the overheat thermostat, it is important that where electrically operated zone valves are used the boiler is wired so that it does not cycle when the zone valves are closed. Also systems fitted with controls that close both hot water and central heating circuits while the boiler is still hot must be fitted with a by-pass circuit to dissipate the residual heat within the boiler.

Further information on by-pass arrangements is provided in later notes and illustrations.

Drain-off taps should be fitted in the pipework close to the boiler and in low points in the system.

NOTE

Although the system can be emptied using the drain-off taps in the pipework around the system, to empty the boiler it is necessary to remove the drain-off plug situated in the return header at the lower right-hand side of the casting. See Fig 2.

COMBINED GRAVITY HOT WATER AND PUMPED CENTRAL HEATING SYSTEMS

Where a cylinder thermostat and zone valve are fitted to control the temperature of the domestic hot water it is recommended that a by-pass be installed in the gravity circuit. A suggested method of doing this is shown in Fig 5 where the bathroom radiator is connected into the gravity circuit and is fitted with two lockshield valves. Mechanically operated thermostatic domestic hot water temperature control valves which allow the boiler to operate when the valve is closed MUST NOT BE FITTED.

FULLY PUMPED SYSTEMS

The pump must always be wired directly to the boiler terminal block as shown in Fig 13.

If a three port diverter valve is used as shown in Fig 4 a by-pass is not necessary since one circuit is always open.

Where a pair of two port valves are used, a by-pass is necessary. The total length of the by-pass circuit taken from the boiler connections should be greater than 4 metres of 22mm pipe. It should be fitted with a lockshield valve and adjusted to maintain a minimum flow through the boiler of 4.5 litres/min (1 gal/mm), see Figs 4 & 6.

Systems fitted with controls which allow the boiler to operate when both the hot water and central heating circuits are closed (i.e. mechanically operated thermostatic control valves) must be fitted with a by-pass circuit capable of:-

1. Dissipating a minimum of 1 kw (3400 Btu/h).
2. Maintaining a minimum water flow through the boiler of 9 litres/min (2 gal/min).

A suggested method of meeting these requirements by using a bathroom radiator fitted with two lockshield valves is shown in FIGS. 4,6.

Additional system information can be found in the Control Systems, Pipework and wiring guide.

SEALED SYSTEMS (FULLY PUMPED)

The installation must comply with the requirements of BS6798 and BS5449 Part 1. The ‘British Gas publication British Gas Specification for Domestic Wet Central Heating Systems’ should also be consulted.

Safety Valve

A non-adjustable spring-loaded valve, pre-set to operate at 3bar (45lbf/in2) shall be used. It must comply with BS6759 Part 1 and include a manual

testing device. It shall be positioned in the flow pipe either horizontally or vertically upwards and close to the boiler. No shut-off valves are to be placed between the boiler and safety valve. The valve shall be installed into a discharge pipe which permits the safe discharge of steam and hot water such that no hazard to persons or damage to electrical components is caused.

Pressure Gauge

A pressure gauge incorporating a fill pressure indicator, covering the range 1-4bar (60lbf/in2) shall be fitted to the system. It should be connected to the system, preferably at the same point as the expansion vessel. Its location should be visible from the filling point.

Expansion Vessel

A diaphragm-type expansion vessel to BS4814 Part 1 shall be fitted close to the inlet side of the pump. The connecting pipework should not be less than 15mm (½ in nominal). Pipework connecting the expansion vessel should not incorporate valves of any sort. Methods of supporting the vessel are supplied by the manufacturer. The nitrogen or air charge pressure of the expansion vessel shall not be less than the hydrostatic head, (height of the top of the system above the expansion vessel). To size the expansion vessel it is first necessary to calculate the volume of water in the system in litres. The following volumes may be used as a conservative guide to calculating the system volume.

Boiler Heat Exchanger	6.5 litres
Small Bore Pipework	1 litre per kW of system output
Micro Bore Pipework	7 litres
Steel Panel Radiators	8 litres per kW of system output
Low Water Capacity Radiators	2 litres per kW of system output
Hot Water Cylinder	2 litres

If the system is extended, the expansion vessel may have to be increased unless previous provision has been made for the extension. Where a vessel of the calculated size is not available, the next available larger size should be used.

The boiler flow temperature is controlled at approximately 82°C.

The vessel size can now be determined from the following table where V = System volume in litres.

Vessel Charge Pressure (bar)	0.5	.0
Initial System Pressure (bar)	0.5	1.0
Expansion Vessel Volume (litres)	V x 0.833	V x 0.11

This is a general guide; if it is required to be more accurate refer to BS7074.

Cylinder

The hot water cylinder must be an indirect coil type or a direct cylinder fitted with an immersion calorifier suitable for operating at a pressure of 0.3bar (5lbf/in2) in excess of safety valve setting. Single feed indirect cylinders are not suitable for sealed systems.

Method of Make-Up

Provision shall be made for replacing water loss from the system either:-

i) from a make-up vessel or tank mounted in a position higher than the top point of the system, and connected through a non-return valve to the system on the return side of all heat emitters.

or

ii) Where access to a make-up vessel would be difficult by using the mains top up method or a remote automatic pressurisation and make-up unit as illustrated in Fig 6 METHODS 1 & 2.

Mains Connection

There shall be no connection to the mains water supply or to the water storage tank which supplies domestic water even through a non-return valve, without the approval of the local Water Authority.

Filling Point

The system shall be fitted with a filling point at low level which incorporates a stop valve to BS1010 and a double check valve (approved by the National Water Council) to be fitted in this order from the system mains. Refer to Fig 6 METHOD 1.

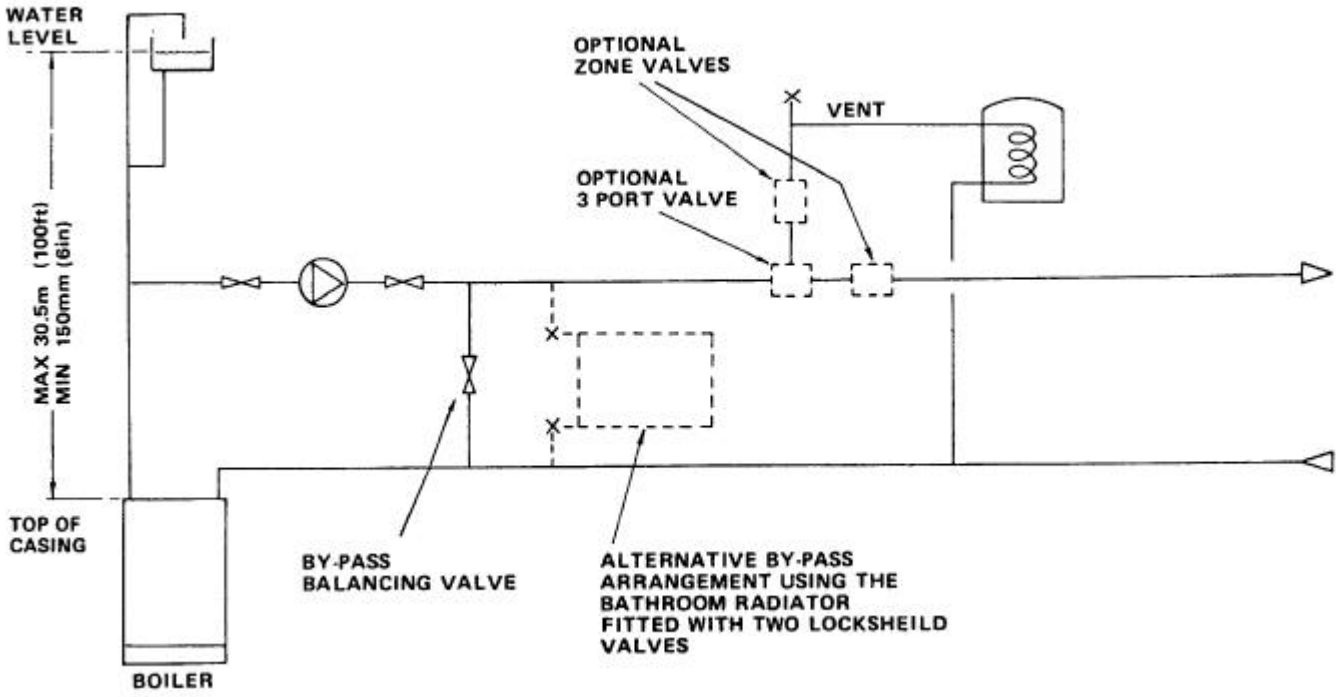

Figure 4 OPEN VENTED FULLY PUMPED SYSTEM WITH A COMBINED FEED AND VENT

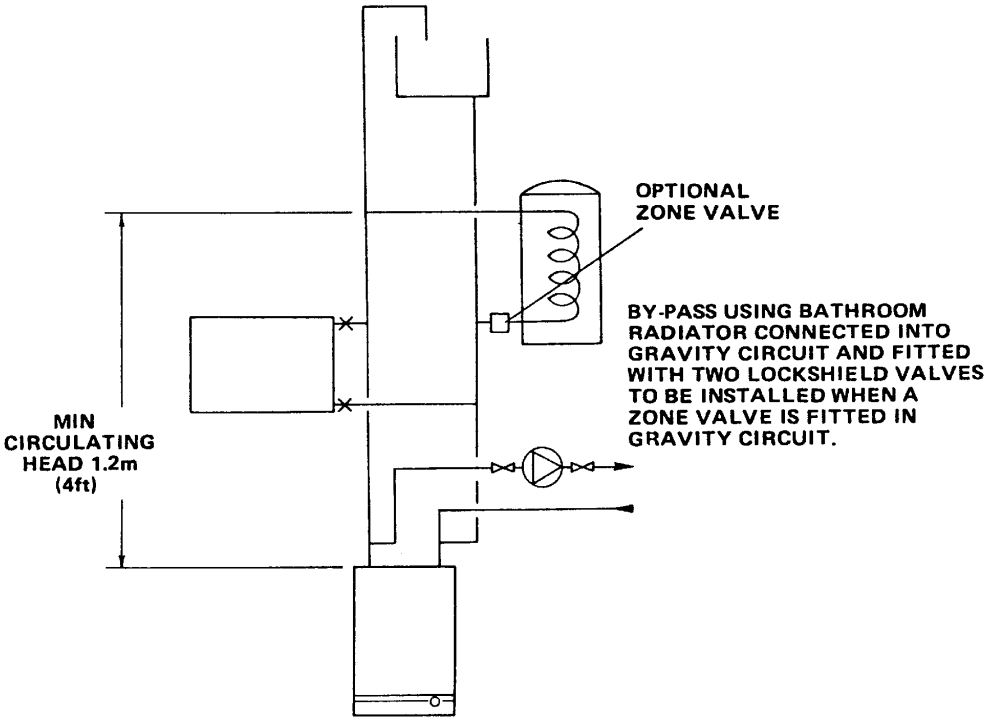

Figure 5 OPEN VENTED GRAVITY DOMESTIC HOT WATER PUMPED CENTRAL HEATING

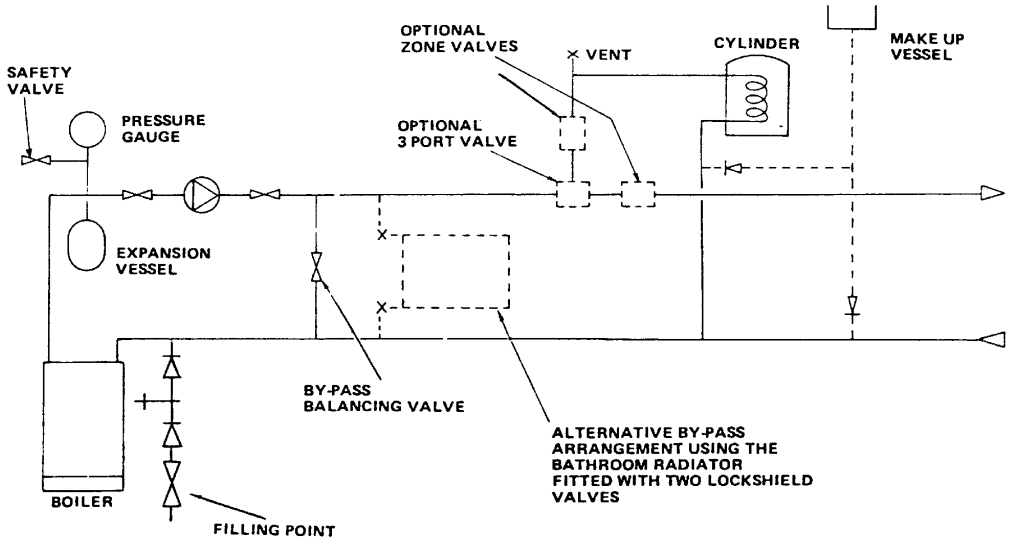

Two methods of filling a sealed water system

METHOD 1
MAINS TOPPING-UP METHOD

NOTE: This method of filling a sealed system may only be used if acceptable to the Local Water Undertaking

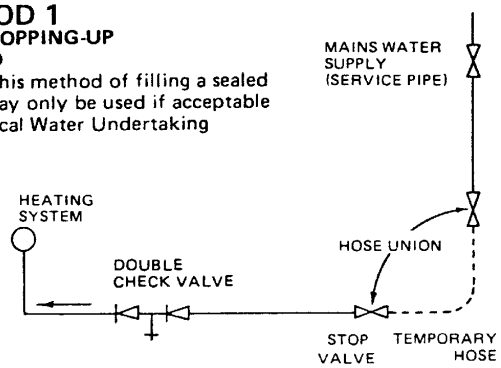

METHOD 2
CISTERN FILLING METHOD

NOTE: Cistern to be supplied through a temporary connection from a service pipe or cold water distributing pipe

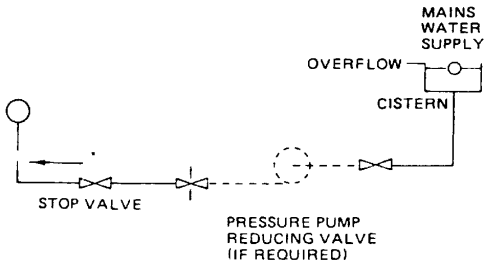

Figure 6 FULLY PUMPED SEALED SYSTEM

It is the law that all gas appliances are installed and serviced by competent persons as stated in the Gas Safety (Installation and Use) Regulations 1994.

Electrical installation and servicing should be carried out by a competent person in accordance with the I.E.E. Wiring Regulations

For Health and Safety information see back page.

The boiler and its associated equipment will arrive on site in one cardboard carton. The contents of the carton is as follows:-

Boiler
Template
Boiler Mounting Plate
Literature Pack containing:
- Installation & Servicing Instructions
- Users Instructions
- Control System Pipework and Wiring Guide

Auxilliary Pack containing
- Gas Service Cock
- Accessory Packs
- Adjustment screws

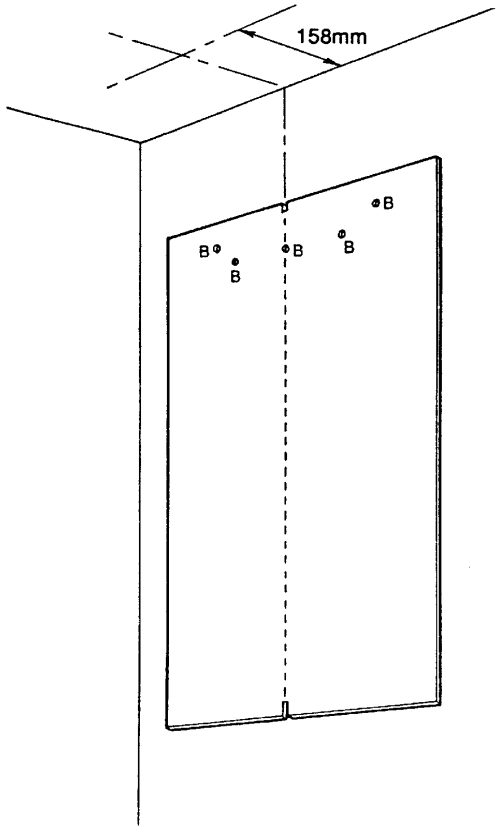

Figure 7 TEMPLATE

Place template in proposed boiler position taking due account of the information given previously and the position of the flue, (the minimum side clearances are automatically allowed for). Refer to page 5 for top and bottom clearances which can be measured from the template. Ensure that the template is level and mark hole positions ‘B’.

If the flue is to rise through the ceiling, mark out centre line of hole for flue by extending the dotted line on template vertically and measure out 158mm from rear wall as illustrated.

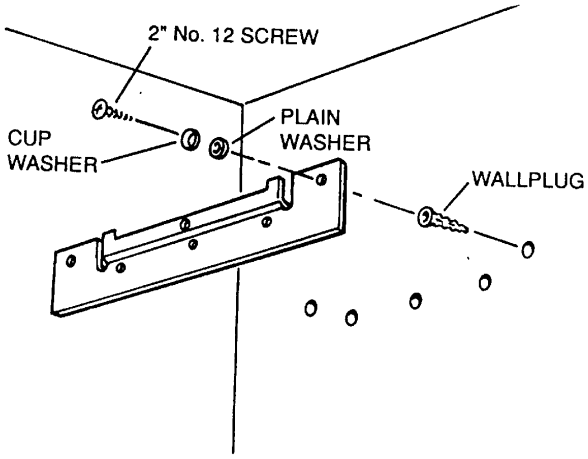

Figure 8 SECURING BOILER MOUNTING PLATE

Remove template and drill holes ‘B’ to a depth of 50mm using a 7mm drill. Cut hole through wall or ceiling as necessary for intended run of flue pipe.

Using wall plugs, screws and washers (accessory pack A) attach boiler mounting wall plate to wall ensuring that it is level.

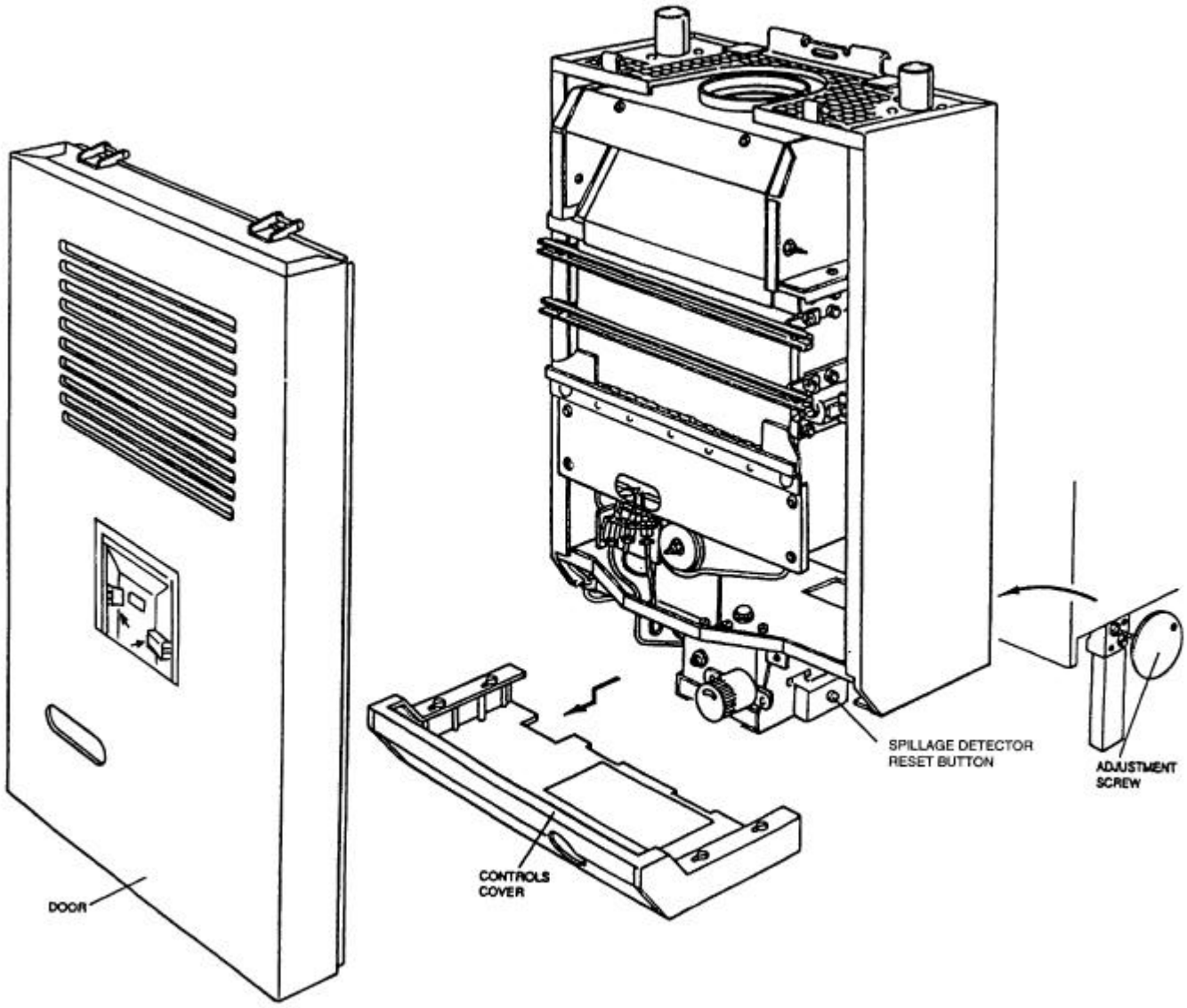

Figure 9 PREPARING BOILER

The controls cover should have been removed when unpacking the boiler, if not pull controls cover forward 25mm, lower to release from the four side fixings and pull forward clear of the thermostat knob

Remove door by undoing the two lower fixing screws and lift door off the two upper hinge brackets.

Engage adjustment screws into the boiler legs but do not screw in fully at this stage

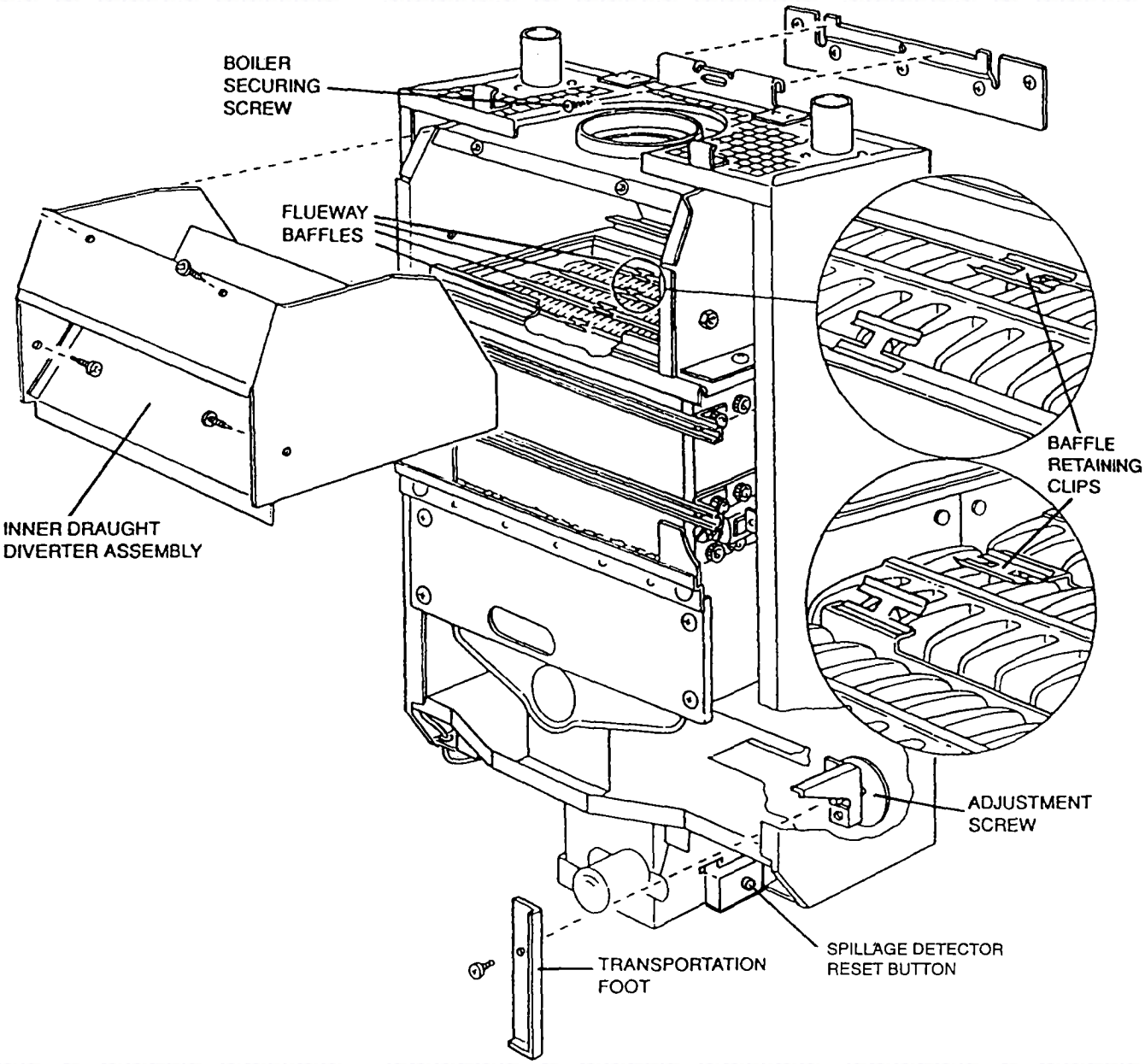

Figure 10 LIFTING AND ALIGNING BOILER

Lift boiler onto the mounting bracket and adjust the boiler position to obtain a minimum of 5mm clearance from any side wall or cupboard.

Secure boiler to the mounting bracket using 5mm screw from accessory pack A.

Undo the screws securing the transportation feet. Discard feet and screws.

Correct vertical alignment with rear wall as necessary using the adjustment screws

Remove the temporary cardboard packing pieces from either side of the casing

Remove the four securing screws and withdraw the inner draught diverter assembly. Check that the flueway baffles are correctly located and retained in the flueways as shown in Fig 10. Reassemble the draught diverter.

Make the flue connection to the boiler draught diverter sealing the joint with a suitable compound. Refer to the notes under FLUE page 6.

The weight of the flue must be supported independently NOT by the boiler.

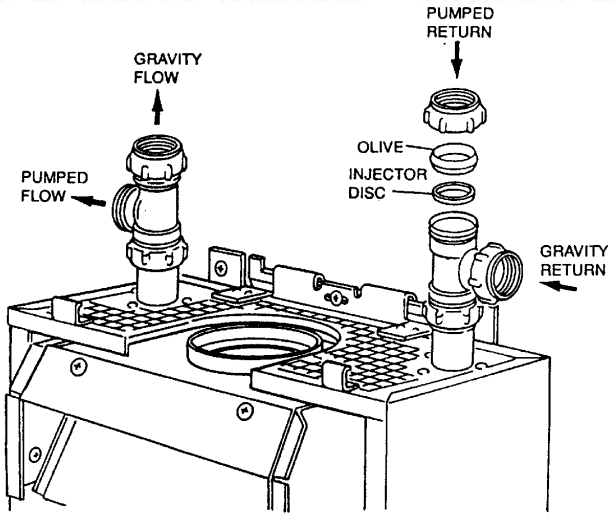

Figure 11 PIPE CONNECTIONS

Connect the system pipework to the boiler, compression fittings are recommended. If however, capillary fittings are used, it is essential to temporarily remove the thermostat bulb from the flow pipe before soldering.

A drain off tap should be installed close to the boiler if it is in a low point of the system.
On combined gravity hot water/pumped central heating installations the flow and return pipes for both the gravity hot water circuit and pumped central heating circuits must be connected to tees fitted directly to the flow and return pipes on the boiler.

The gravity circuit should be installed in 28mm copper pipe. 28mm tees should be used.

The injector disc (accessory pack G) must be positioned in the pumped return branch of the tee as illustrated in Figs 11 & 11B.

Remove gas service cock from the auxilliary pack and attach it to the union nut on the inlet to the gas assembly.

With the inlet connection of the gas service cock facing the rear, connect the gas supply pipe.

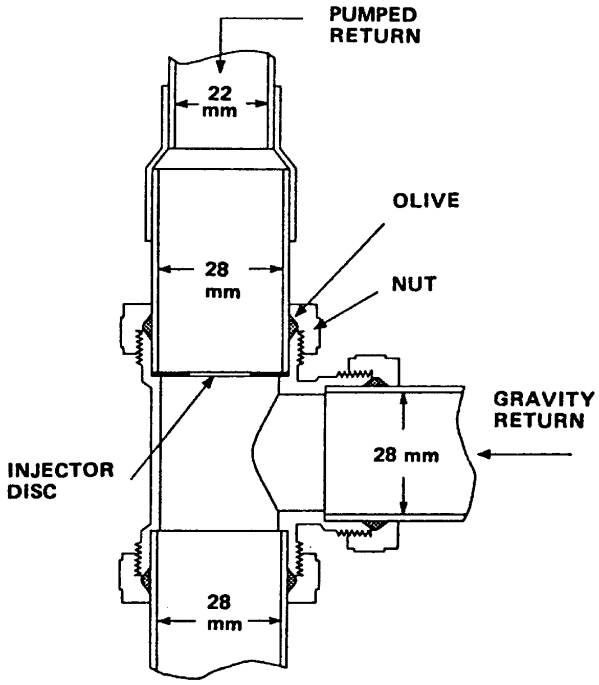

Figure 11B **WARNING:** UNDER NO CIRCUMSTANCES SHOULD A 'REDUCING SET' BE FITTED

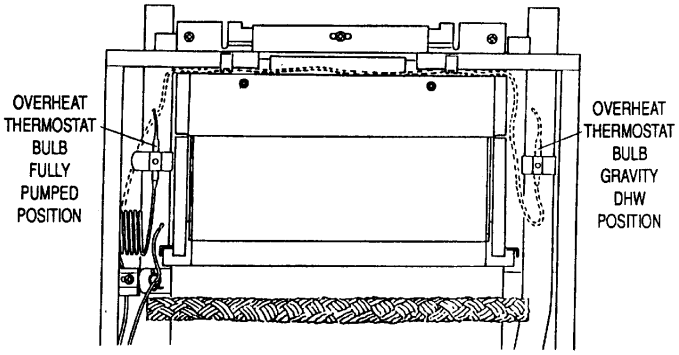

Figure 12

NOTE
The boiler is despatched with the overheat Thermostat bulb positioned for FULLY PUMPED OPEN VENTED OR SEALED SYSTEMS.

ONLY if the boiler is to be used on a GRAVITY DHW system should the bulb of the overheat thermostat be repositioned as described below, to prevent nuisance operation of the overheat thermostat.

Remove clip securing overheat thermostat bulb to the flow pipe.

Uncoil the thermostat capillary and route it through the two retaining clips attached to the front flange on the top panel. Position the thermostat bulb in the indent in the return pipe and secure in this position using the clip previously removed.

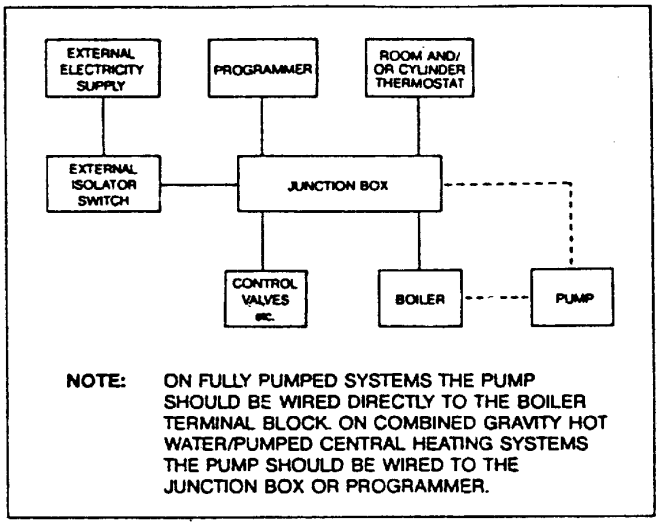

Figure 13 PRINCIPAL OF WIRING

WIRING

WARNING: This appliance must be earthed.
The boiler and all external control circuit wiring must be supplied from the same single isolating switch and should be fused at 3A.

Care must be taken to ensure that all wiring to the boiler is kept clear of sharp edges and hot surfaces.

Ensure that the earth conductor is longer than the L, N, and SWL from the point of anchorage, so that the current carrying conductors become taut before the earth conductor, if the cable is pulled out of the cable clamp.

The boiler terminal block which is situated in the control box is not designed to accept wiring from all the on site controls and therefore the installer will usually need to incorporate a suitable junction box or Potterton Electronic Programmer.

The principle of wiring is shown in Fig 13. It should be noted that the pump must be wired directly to the boiler terminal block on FULLY PUMPED systems and to the junction box or programmer on combined GRAVITY HOT WATER/PUMPED CENTRAL HEATING systems.

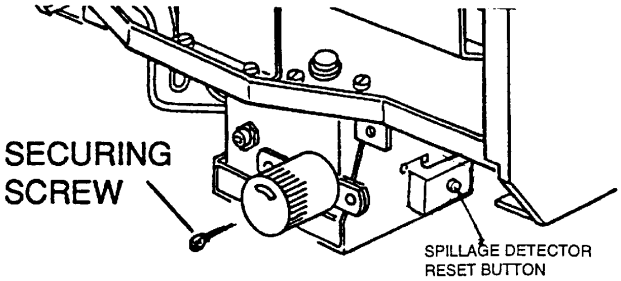

Figure 14 ACCESS TO THE BOILER ELECTRICAL TERMINAL BLOCK

Remove control box securing screw and lower the control box to gain access to the boiler terminal block.

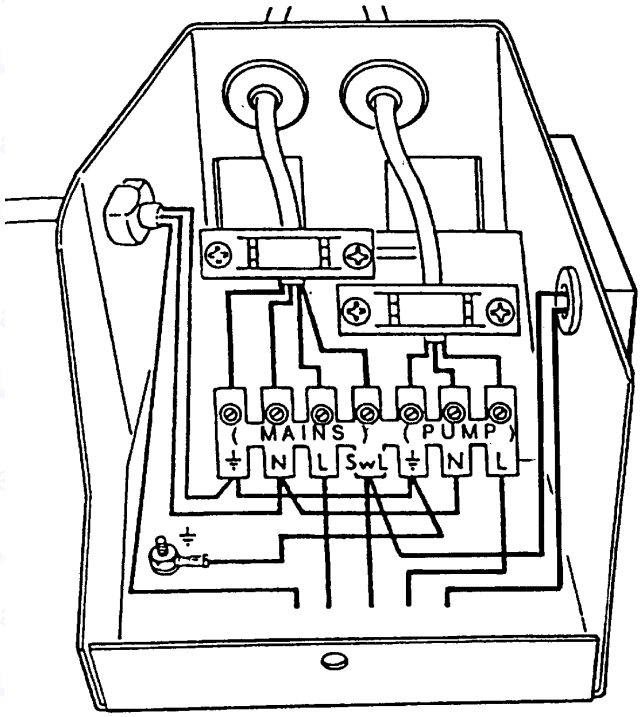

Figure 15 WIRING THE BOILER FOR A FULLY PUMPED SYSTEM

Route a four core cable through the plastic bush at the rear of the control box and the cable clamp as illustrated Fig 15, and connect it to the boiler input terminals as follows:-

Permanent live to terminal marked MAINS ‘L’
Neutral to terminal marked MAINS ‘N’
Earth to terminal marked MAINS +
Switched live from external controls to terminal marked MAINS SwL.

If there are no secondary controls fitted connect the SwL terminal to permanent live in the external junction box.

Secure the cable within the cable clamp by tightening the securing screws.

Following the pump manufacturers instructions connect the pump supply wires to terminals marked PUMP, L, N and 4” on the boiler terminal block.

Route the cable through the plastic bush in the rear of the control box and cable clamp as illustrated Fig 15. Secure cable in cable clamp by tightening the two securing screws.

Close control box and replace securing screw.

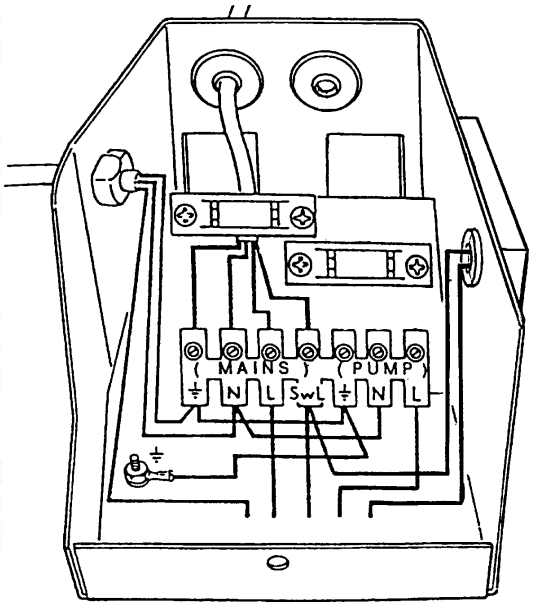

Figure 16 WIRING THE BOILER FOR COMBINED GRAVITY HOTWATER/PUMPED CENTRAL HEATING SYSTEM

Route a three core cable through the plastic bush in the rear of the control box and the cable clamp as illustrated I Fig 16. Connect the cable to the boiler input terminals as follows:

Switched live on the GRAVITY DHW control circuit to terminal marked MAINS 'SwL'
Neutral to terminal marked MAINS 'N'
Earth to terminal marked MAINS

Secure the cable within the clamp by tightening the two securing screws.

The pump should be connected to PUMPED CENTRAL HEATING control circuit at the junction box. See FIG. 13

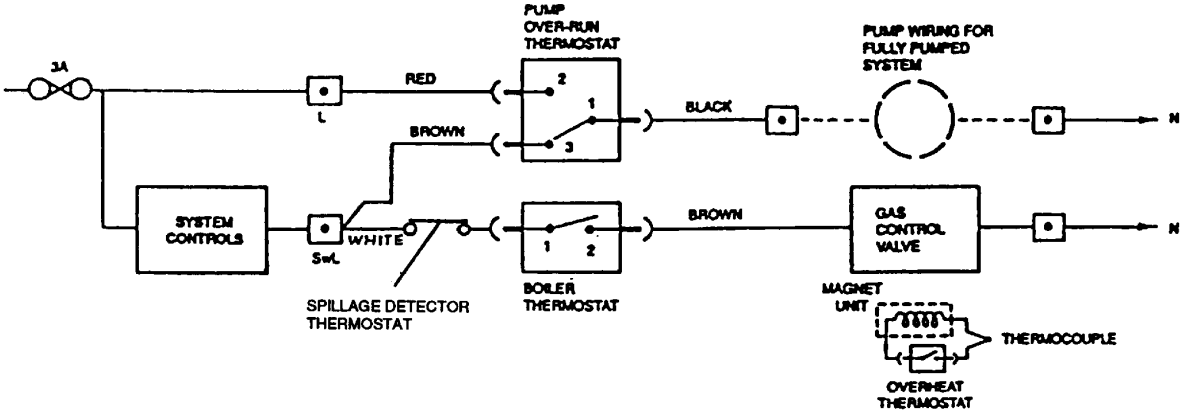

Figure 17 FUNCTIONAL FLOW DIAGRAM

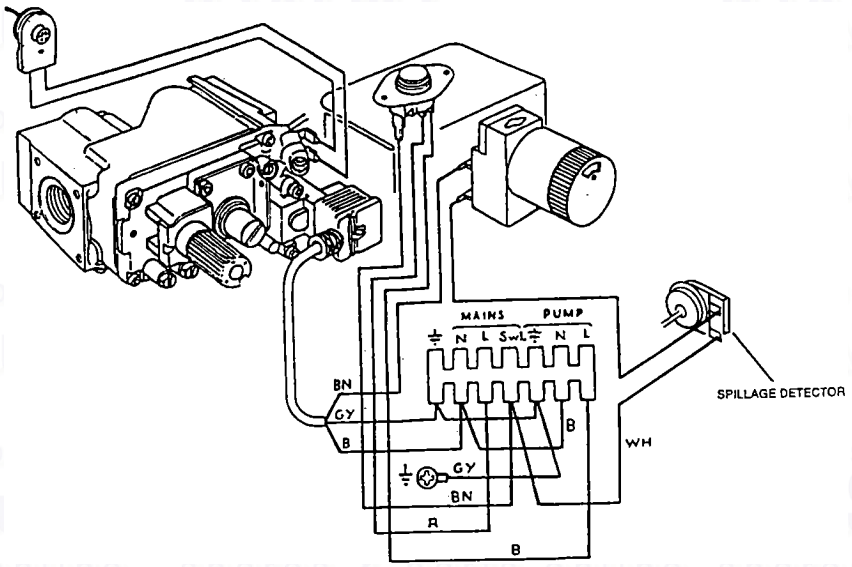

Figure 18 BOILER WIRING DIAGRAM

Open Vented Systems
Remove the pump and flush out the system thoroughly with cold water. Refit the pump, fill and vent the system and examine for leaks.

Sealed Systems
The system can be filled using a sealed system filler pump with a break tank or by any other method approved by the local Water Authority. Refer to FIG 6 and BS6798 1987. Remove pump and flush out the system thoroughly with cold water. Re-fit the pump. Fill and vent the system until the pressure gauge registers 1.5 bar (22.5lbf/in2), examine for leaks. Raise the pressure until the safety valve lifts. This should occur within ± 0.3 bar of the pre-set lift pressure of 3 bar. Release water to attain the correct cold fill pressure.

All Systems
The whole of the gas installation including the meter should be inspected and tested for soundness and purged in accordance with the recommendations of BS6891.
Fit the case door into position by lifting it onto the top hinge brackets and secure it with the lower two fixing screws.

First Lighting

A. Ensure that the pump and radiator isolating valves are open.
B. Turn the boiler thermostat to the ‘0’ position.
C. Turn on the main gas supply and the gas service cock on boiler.
D. Ensure that the time control, if fitted is in an ‘ON’ condition, and that the room and/or cylinder thermostats, where fitted are set to high temperatures.
E. Switch on the external electricity supply to the boiler. In the event of an electrical fault after installation of the appliance, preliminary electrical system checks must be carried out as described in the BG multimeter instruction book. The checks to be carried out are:
A - Earth Continuity, B - Short Circuit, C - Polarity, D - Resistance to Earth.
F. Partly depress and turn the gas control knob clockwise ensuring the symbol • lines up with the datum mark on the gas valve body. See Fig 19. This ensures that the valve is in the ‘OFF’ condition.
G. Partly depress and turn the control knob anti-clockwise until the symbol * lines up with the datum mark on the gas valve body. Press and hold in the control knob and press the spark generator button until a click is heard. Release the spark generator button and repeat operation until the pilot ignites. See Figs 2&19. Hold in the control knob for a further 15 seconds. On release the pilot should remain alight. Partly depress and turn the control knob anti-clockwise until the symbol lines up with the datum mark on the gas valve body.

NOTE:
On first lighting, establishment of the pilot flame may be slightly delayed due to the presence of air in the pipework. If the pilot fails to light or goes out at any time, immediately turn the control knob clockwise as far as possible, then release it and wait three minutes before repeating the lighting procedure. The control knob should not be touched during this period.

H. Turn the boiler thermostat on and to a high setting and the main burner will light.
I. Set the boiler thermostat and the room and/or cylinder thermostat(s) and time control, where fitted, to their required operating conditions.
J. After the boiler has operated for five minutes check that there is no spillage or leakage of combustion products in accordance with BS5440 Part 1. Check soundness of all appliance gas carrying components and joints using leak detection fluid and a mirror where necessary.
K. Switch off the boiler, using the thermostat knob.

NOTE: If the main burner fails to light turn the boiler thermostat to the off position and check that the spillage detector thermostat reset button (see Fig 18a) is pressed in, then repeat operation. If you have to keep resetting the thermostat, or the main burner fails to light consult the fault finding chart on page 26, Fig 23.

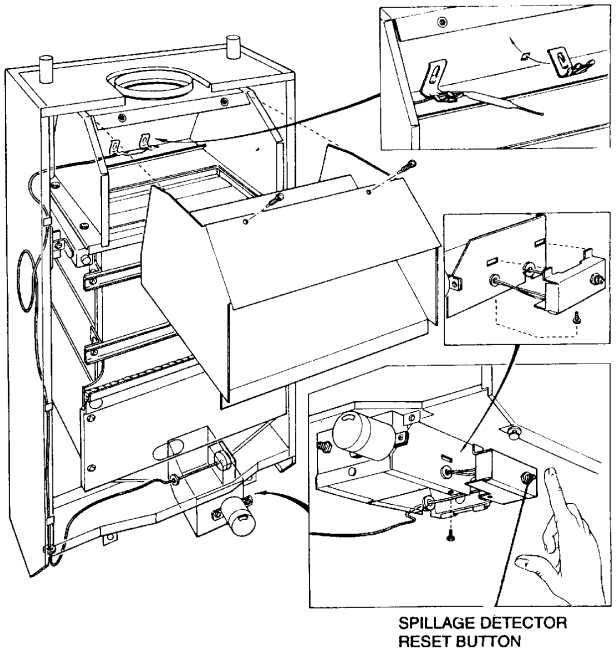

Figure 18a

FINAL ADJUSTMENT

A. Remove the screw from the burner pressure test nipple on the gas control valve and fit a pressure gauge to the test nipple. See Fig 19.
B. Turn on the boiler thermostat, then check that the pressure is in accordance with the values stated under TECHNICAL DATA. The burner pressure is factory set to the maximum stated.
C. If burner pressure adjustment is necessary, remove the screwed cap from the gas control valve, see Fig 19, and turn the screw beneath clockwise to increase pressure and anti-clockwise to reduce pressure.
D. With the burner set to its correct pressure, the firing rate given in TECHNICAL DATA should also be obtained and this should be checked by meter reading 10 minutes after the main burner has been lit.
E. Shut down the boiler, remove the pressure gauge. Replace the screwed cap and refit the screw in the test nipple. Re-light and test for gas soundness at the test nipple screw.
F. Remove the self-adhesive arrow from the inspection ticket tied to the burner supply pipe and stick it to the Data Plate inside the controls cover to indicate the appropriate burner setting pressure. Refit the controls cover.
G. Heat the system to maximum. Check for water leaks, turn the boiler off, drain the system whilst hot.
H. Refill the system and on sealed systems adjust to the correct cold fill pressure. Set the pressure gauge pointer to the system design pressure.
I. If a by-pass circuit is fitted, the by-pass valve should be adjusted with the boiler operating under minimum load conditions to maintain sufficient water flow through the boiler to ensure that the overheat thermostat does not operate under normal operating conditions.
J. Remove the temporary label from the front of the casing, having checked compliance with the information it contains

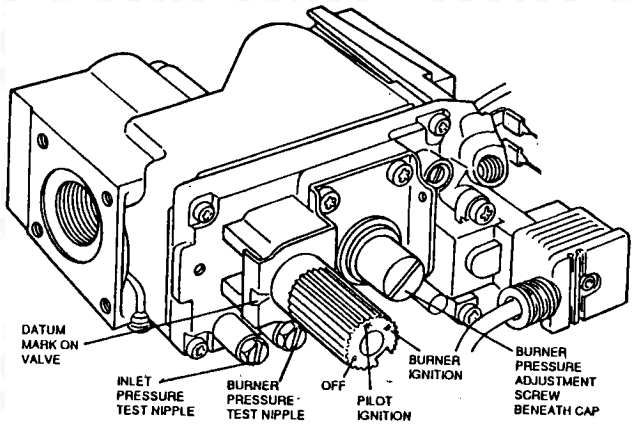

Figure 19 GAS CONTROL VALVE

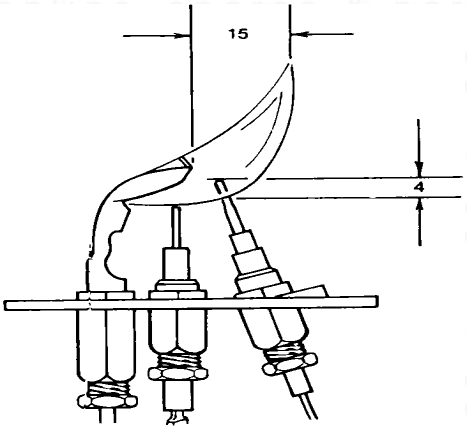

Figure 20 PILOT BURNER

Pilot Burner

The pilot burner pressure is non-adjustable. The pilot flame should heat the thermocouple so that the pilot safety device is “held in” but must not cause the thermocouple to glow bright red. Fig 20 illustrates the approximate size of a correct flame. The E.M.F. generated by the thermocouple should be of the order of 20-30 mV open circuit, 10-14 mV closed circuit. Due to the voltage drop in the overheat thermostat circuit there should be 6.5-8.5 mV closed circuit at the connection to the gas control valve. Drop out should occur between 1-3 mV closed circuit. If these conditions cannot be achieved check that the inlet pressure is 20 mbar See Fig 19 for inlet pressure nipple. If this is correct contact Potterton Myson.

Boiler Thermostat

At its minimum and maximum settings, the thermostat should control the water flow temperature at approximately 55ºC-82ºC (130ºF -180ºF). The thermostat has been calibrated by the makers and no attempt should be made to re-calibrate it on site. Turn the thermostat to the ‘O’ position and check that the main burner shuts down.

Pump Over-run Thermostat (Applicable on fully pumped systems only)

The over-run thermostat will keep the pump running when the boiler has shut down, as long as the combustion chamber is hot.

Overheat Thermostat
The overheat thermostat is pre-set and no adjustment is possible. It will require manual re-setting and the pilot re-lighting if an overheat condition occurs. The re-set button can be found on the front of the controls box. See Fig 2.

Spillage Detector Thermostat
The Spillage Detector Thermostat (S.D.T.) is a manual reset thermostat that will trip out if flue products spill from the down draught diverter.
If you have to keep resetting the thermostat, consult the fault finding chart on page 26, Fig 23.

Gas Control Valve
1) Main Solenoid
   Check the operation of the valve by turning off the electricity supply, either by the isolating switch or time control, where installed. The main burner must shut down immediately.
2) Flame Failure Valve
   Turn the gas control knob to the 'off' position. The pilot must shut down, and a "click" indicating thermocouple drop out, should be heard within 60 seconds.

External Controls
Check that any other external controls connected in the system such as time clocks and thermostats, control the boiler as required.

Users Instructions
A Users Instructions leaflet is provided with this boiler but the householder must have the operation of the boiler and system explained by the Installer. The householder must also be advised of the importance of annual servicing and of the precautions necessary to prevent damage to the system and building, in the event of the system remaining out of commission in frost conditions.

SERVICING INSTRUCTIONS - Page 21

Regular skilled servicing and cleaning of the appliance is essential to ensure continued safe and efficient operation. The frequency of cleaning will depend upon the particular installation conditions, and the use to which the appliance is put, but in general, once per year should be adequate.

It is the law that all gas appliances are installed and serviced by competent persons as stated in Gas Safety (Installation and Use) Regulations 1994.

Electrical installation and servicing should be carried out by a competent person in accordance with the I.E.E. Wiring Regulations.

For Health and Safety Information see back page.

Servicing is best arranged by a contract placed with Potterton Myson Limited and further details are available from the local Potterton Myson Service Department.

The boiler DATA PLATE and WIRING DIAGRAM are attached to the inside of the plastic controls cover. The boiler CODE NUMBER which should be quoted when ordering spares or requesting information is on the front of the control box.

The following notes apply to the boiler and its controls but it should be remembered that attention must also be paid to the heating circuit itself including radiator valves, thermostats, the time control and the expansion and feed water system. It is advisable to clean the boiler immediately after the end of the heating season.

In all cases prior to servicing, light up the boiler and check that the pilot and main burners have a clean, even flame and that the gas rate and main burner pressure is correctly set.

Before the start of any servicing work, switch off at the external electricity supply by disconnecting the plug at the socket or switching off external isolating switch. Turn off the gas service cock.

NOTE:
After completing any servicing or replacement of components check for gas soundness and carry out functional checks.

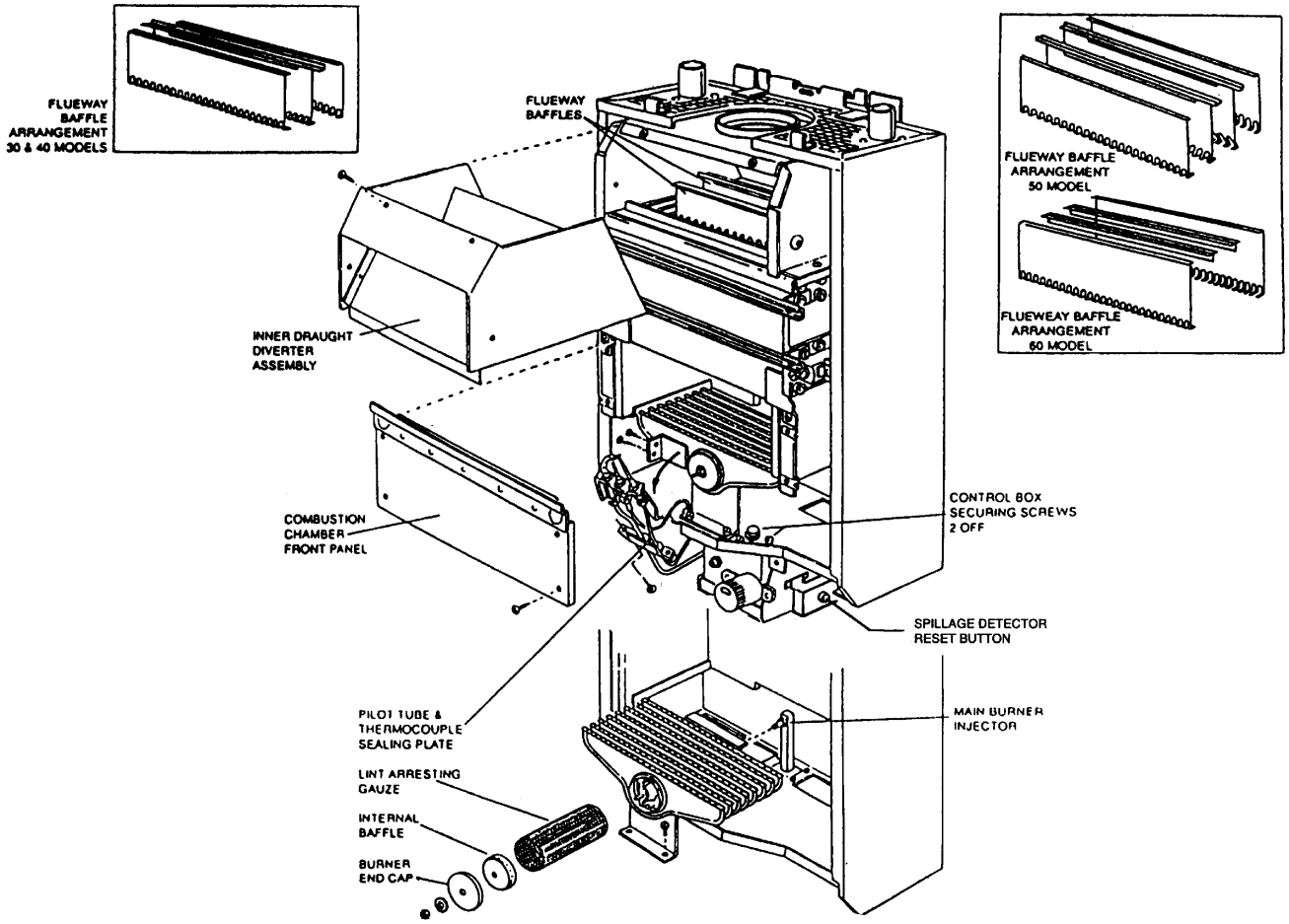

Figure 21 PREPARING THE BOILER FOR SERVICING

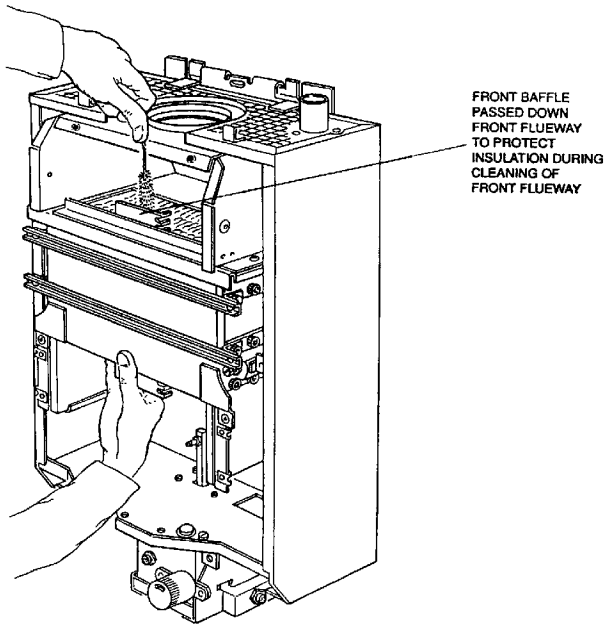

Figure 21B

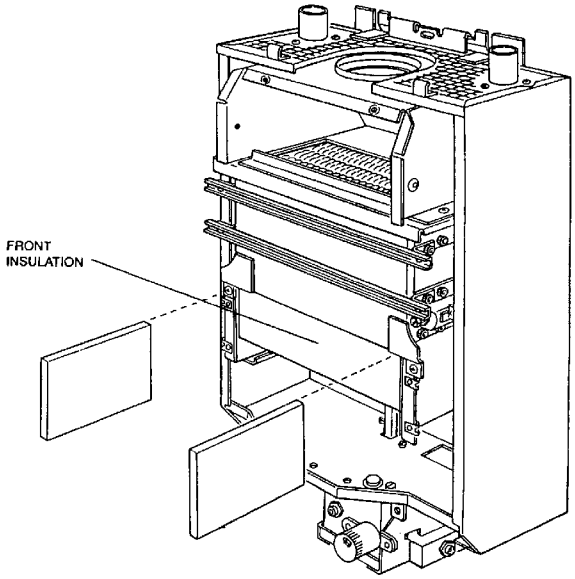

Figure 21C

1. PREPARING THE BOILER FOR SERVICING

See Fig 21

A. Switch off the external electricity supply by disconnecting the plug at the socket or switching off external isolating switch.
B. Remove controls cover by pulling it forward 25mm, lower it to release it from its four side fixings and pull forward clear of the thermostat knob.
C. Turn off the gas service cock.
D. Remove door by unscrewing lower fixing screws and lift door off the two upper hinge brackets.
E. Remove the four securing screws and withdraw the inner draught diverter assembly from the mouth of the draught diverter. See Fig 21.
F. Remove retaining clips and lift out baffles from flueways, there are 3 baffles in 30 & 40 models and 4 baffles in 50 & 60 models.
G. Remove four screws securing the lower combustion chamber front panel and remove panel.

2. MAIN BURNER REMOVAL AND CLEANING

A. Remove two screws securing pilot tube and thermocouple sealing plate to boiler base.
B. Remove two screws securing pilot to burner. Flex pilot assembly forward and down.
C. Remove two screws securing main burner to boiler base.
D. Slide main burner forward to disengage it from the rear injector and lift out main burner.
E. Unscrew the MS nut securing the burner cap and remove end cap. Withdraw the internal baffle and gauze from within burner. See Fig 21. Thoroughly clean the gauze using a brush or vacuum cleaner. Clean all deposits from the surface of the burner flame strip with soft brush or vacuum cleaner and ensure there is no fluff in the entry of the burner venturi.
F. Remove main burner injector and ensure the orifice is clean.
G. PILOT BURNER
The following operations are only necessary if the pilot flame is distorted or the wrong size, i.e. too small. Disconnect the electrode lead from the electrode, uncouple the thermocouple and pilot gas tube nuts at the base of the pilot assembly and lift out the pilot. Note, the pilot injector sits loosely on top of the pilot tube, or may be retained in pilot head itself. Remove and inspect the pilot injector for dirt deposits and clean if necessary. Likewise inspect and clean the electrode and thermocouple using a soft brush.

3. HEAT EXCHANGER

Working from above and below the heat exchanger use a suitable brush and remove all deposits from between the fins. When cleaning the front flueway protect the insulation inside the upper front panel by passing the front baffle into the flueway as illustrated in FIG. 21 B.

4. COMBUSTION CHAMBER INSULATION

Check the combustion chamber insulation for damage. If damaged replace as described under replacement.

5. REASSEMBLY

Refit the main burner ensuring it is correctly engaged onto the rear injector. Replacement of the other components is the reverse of removal. Ensure that the flueway baffles are refitted as illustrated in Fig 21 and the sealing plate and split grommets form a tight seal around the pilot tube and thermocouple capillary.

6. Follow the full commissioning procedure as detailed in the COMMISSIONING section of these instructions.

7. No further servicing is required on any other boiler mounted units. Repair is by replacement.

8. FAULT FINDING

Refer to fault finding chart Fig 23 and wiring diagram Fig 17.

9. REMOVAL/REPLACEMENT OF BOILER MOUNTED UNITS

MAIN BURNER

Refer to Fig 21 and carry out the following

A. Carry out operations A, B, C, D, G as described in section 1 PREPARING BOILER FOR SERVICE and operations A, B, C, D described in section 2 MAIN BURNER - REMOVAL AND CLEANING.
B. Replacement is the reverse of removal.
C. Follow the full commissioning procedure as detailed in the COMMISSIONING section of these instructions.

GAS CONTROL VALVE

A. Carry put operations A, B, C in section 1 PREPARING THE BOILER FOR SERVICE.
B. Unplug the electrical lead from the gas valve.
C. Disconnect the two blue wires from the thermocouple interrupter connections.
D. Disconnect the thermocouple lead from the interrupter connection on the gas valve.
NOTE: the interrupter connector is held in place by the thermocouple lead.
E. Disconnect the pilot tube at the gas valve.
F. Undo the union at the gas service cock.
G. Separate the gas control valve from the flange at the outlet port by removing the four securing screws.
H. Remove the screw securing the gas valve support bracket to the boiler.
I. Unscrew gas inlet assembly at valve and remove two M4 screws retaining valve support bracket. Fit both components to new valve.
J. Replacement is the reverse of the removal. Use new sealing gasket on reassembly.
K. Follow the full commissioning procedure as detailed in the COMMISSIONING section of these instructions

PILOT FILTER

The pilot burner is protected from blockage by a pilot filter situated within the gas control valve. The filter is large and designed to last the life of the gas control valve under normal operating conditions. It is therefore unlikely to need replacing. However in the event of pilot filter blockage being suspected the complete valve will need replacing.

THERMOCOUPLE

a Carry out operations A, B, C, D in section 1 PREPARING BOILER FOR SERVICE.
b Remove two screws securing pilot tube and thermocouple sealing plate to boiler base.
c Disconnect thermocouple lead from the interrupter connection on the gas control valve and at the pilot. NOTE: The interrupter connector is held in place by the thermocouple lead. Withdraw thermocouple from grommet, noting the route the lead takes so that the replacement can be routed in a similar manner to eliminate sharp bends.
d Replacement is the reverse of removal. Ensure on reassembly that the sealing plate and split grommets form a tight seal around the pilot tube and thermocouple capillary.

ELECTRODE

a Carry out operations A,B,C,D in section 1 PREPARING BOILER FOR SERVICE.
b Pull off electrode lead from electrode.
c Unscrew the nut securing the electrode to the pilot and withdraw electrode.
d Replacement is the reverse of removal.

COMBUSTION CHAMBER INSULATION

a To remove the insulation from the combustion chamber sides, rear and lower front panel carry out operations A,B,C,D,G in section 1 PREPARING BOILER FOR SERVICE. If the insulation is to be removed from the upper front panel the main burner will also need to be removed as described under MAIN BURNER REMOVAL & CLEANING, operations A,B,C,D.
b The side insulation panels are removed by sliding them from their retaining chanels.
c Once the side insulating panels have been removed the rear insulation can be lifted out and the upper front insulation can be slid downwards from inside the panel.
d The lower front insulation is removed by bending back the retaining tabs. Replacement is the reverse of removal. Follow the full commissioning procedure as detailed in the COMMISSIONING section of these instructions.

SIGHT GLASS

WARNING: GREAT CARE SHOULD BE TAKEN WHEN HANDLING AND DISPOSING OF A BROKEN SIGHT GLASS.

a Carry out operations A,B,C,D in section 1 PREPARING BOILER FOR SERVICE.
b Remove three M4 nuts from sight glass retainer and remove sight glass assembly.
c Replacement is the reverse of removal taking care that the clear circle in the sight glass lines up with the hole in the combustion chamber door. NOTE: new gaskets must be used when sight glass is fitted.

ELECTRODE LEAD

a Carry out operations A,B,C,D in section 1 PREPARING BOILER FOR SERVICE.
b Remove rear locking nut securing spark generator to its mounting bracket, withdraw spark generator and pull off electrode lead. Pull off electrode lead from electrode. Remove the split grommet and withdraw the electrode lead through the hole in the boiler base.
c Replacement is the reverse of removal.

SPARK GENERATOR

a Carry out operations A,B,C in section 1 PREPARING BOILER FOR SERVICE.
b Pull off electrode lead from spark generator, remove rear locking nut securing spark generator to its mounting bracket and withdraw spark generator.
c Replacement is the reverse of removal.

PUMP OVER-RUN THERMOSTAT

a Carry out operations A,B,C,D in section 1 PREPARING BOILER FOR SERVICE.
b Remove control box securing screw and lower control box.
c Access to the pump over-run thermostat is made easier by separating the upper assembly of the control box from the boiler base. This is done by removing the two hexagonal head screws identified in Fig 21 Tilt the upper assembly and disconnect the electrical wiring from the thermostat as follows:-
Black from terminal 1
Red from terminal 2
Brown from terminal 3
d Replacement is the reverse of removal.
e Follow the full commissioning instructions as described in the COMMISSIONING section of these instructions.

BOILER THERMOSTAT

a Carry out operations A,B,C,D in section 1 PREPARING BOILER FOR SERVICE.
b Remove control box securing screw and lower control box.
c Pull off the outer thermostat knob.
d Remove inner thermostat post by undoing the two securing screws
e Access to the boiler thermostat is made easier by separating the upper assembly of the control box from the boiler base. This is done by removing the two hexagonal head screws identified in Fig. 21.Tilt the upper assembly and disconnect the electrical connections from the rear of the thermostat as follows:-
White from terminal 3
Brown from terminal 2
Refer to Figs 17 & 18.
f Remove the nut securing the thermostat to the control box.

g Remove the split pin retaining the thermostat bulb and withdraw bulb from its pocket.
h Remove split grommet in the base of the boiler and the split grommet from the side of the control box, and feed thermostat capillary and bulb through holes.
I Replacement is the reverse of removal. The bulb of the new thermostat should be coated with heat conducting paste. Ensure the split grommet in the base of the boiler makes a good seal around the capillary.
j Ensure that the capillary is secure in the clips provided. Follow the full commissioning procedure as detailed in the COMMISSIONING section of these instructions.

SPILLAGE DETECTOR THERMOSTAT

a Carry out operation A,B,C,D,E in section 1 PREPAIRING BOILER FOR SERVICE.
b Remove the sensor from the support clips in the down draught diverter and carefully remove the capillary from the support clips on the front edge of the casing.
c Carefully dislodge the split grommet from the base of the boiler and feed the capillary and bulb through the hole.
d Access to the spillage detector thermostat contacts is carried out by separating the thermostat housing from the control box see Fig 22. This is done by removing the securing screw (identified in Fig 18a) and lowering the housing.
e Remove the two leads from the S.D.T. (Polarity is not important).
f Remove the thermostat fixing nut then remove the thermostat complete with its capillary and two split grommets from the control box slots
g Replacement is the reverse of removal, fit the two split grommets to the new thermostat capillary, carefully bend the new capillary to match the contour of the disconnected one.
h Ensure that the capillary is routed away from hot metallic surfaces (see Fig 18a) and the sensor bulb is located centrally between the two locating clips. Also ensure that the location pin of the thermostat is properly located before tightening the locking nut.
i Make sure the split grommet in the base of the boiler makes a good seal around the capillary.
j Follow the full commissioning procedure as detailed in the COMMISSIONING section of these instructions

OVERHEAT THERMOSTAT

a Carry out operations A,B,C,D in section 1 PREPARING BOILER FOR SERVICE.
b Remove control box securing screw and lower control box.
c Access to the overheat thermostat is made easier by separating the upper assembly of the control box from the boiler base. This is done by removing the two hexagonal head screws identified in Fig.21. Tilt the upper assembly and disconnect the two push-on electrical connections from the overheat thermostat terminals.
d Remove the nut securing the thermostat to the control box.
e Remove clip securing the thermostat bulb to the pipe.
f Remove split grommet in the base of the boiler and the split grommet from the side of the control box and feed thermostat capillary and bulb through holes.
g Replacement is the reverse of removal. The bulb of the new thermostat should be coated with heat conducting paste. Ensure the split grommet in the base of the boiler makes a good seal around the capillary.
h Ensure that the capillary is secure in the clips provided. Follow the full commissioning procedure as detailed in the COMMISSIONING section of these instructions.

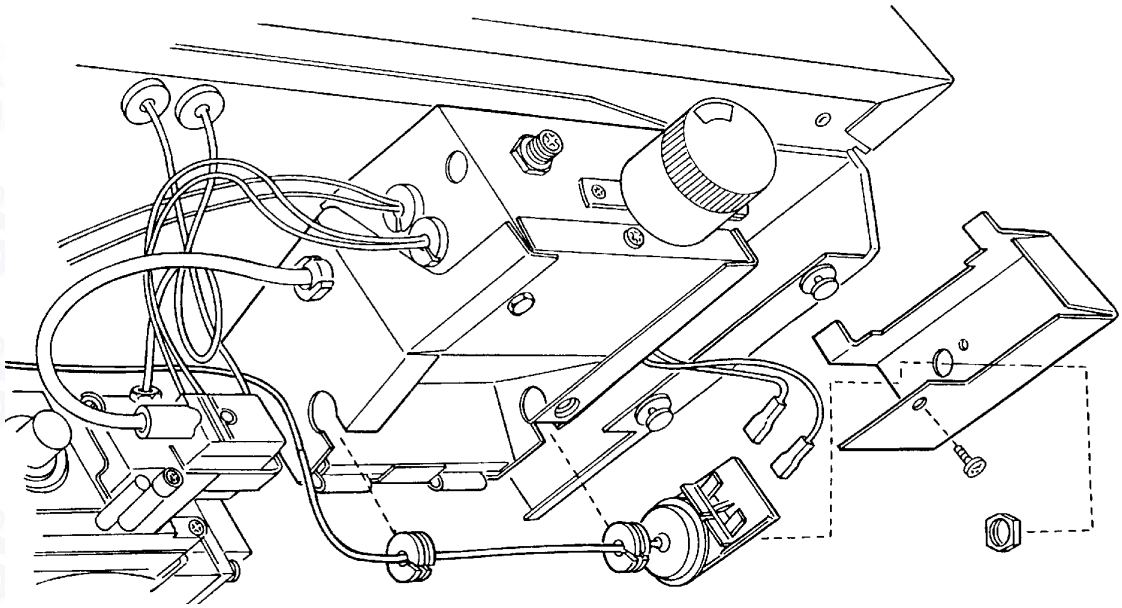

Figure 22

Figure 23 FAULT FINDING CHART

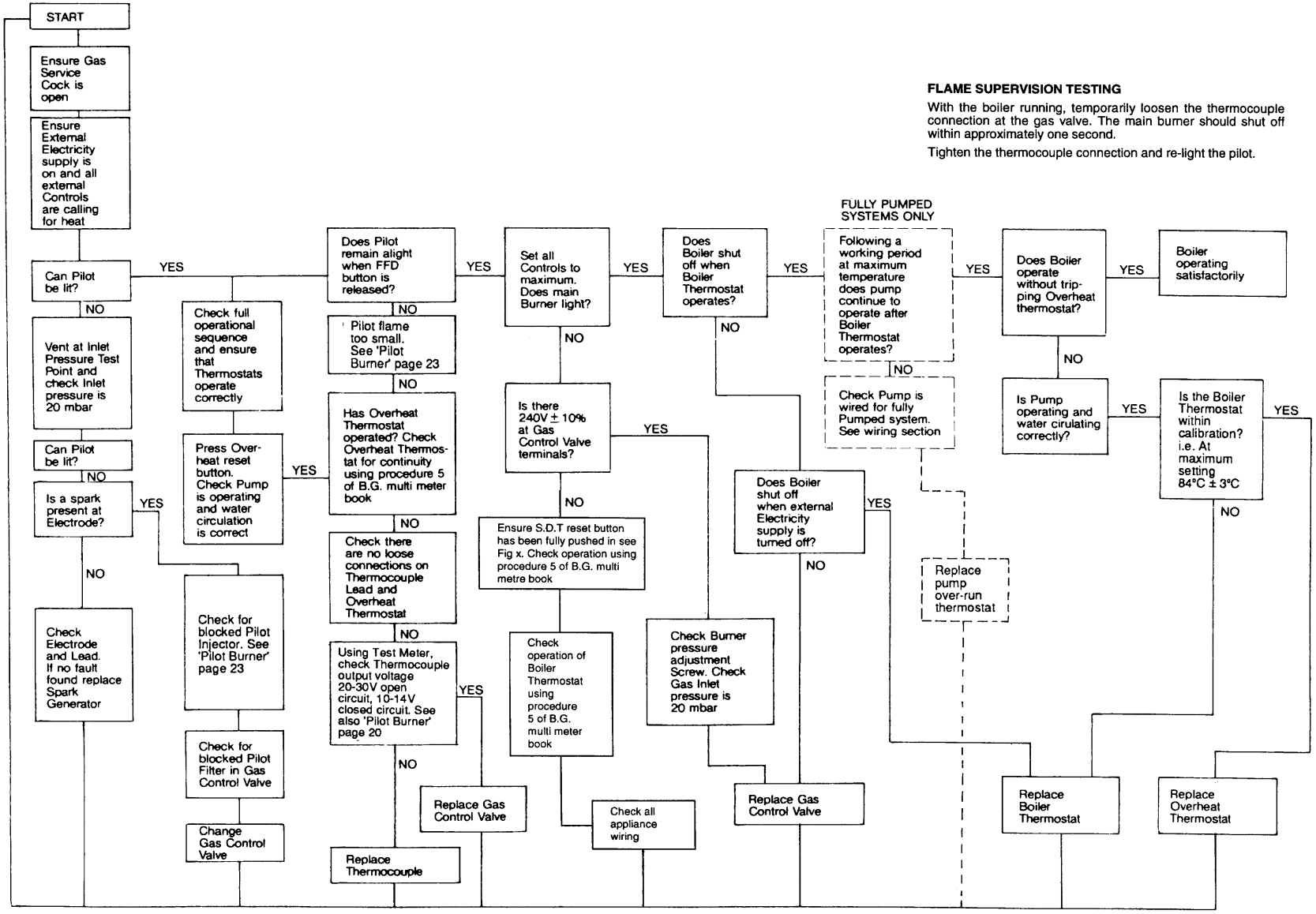

FLAME SUPERVISION TESTING

With the boiler running, temporarily loosen the thermocouple connection at the gas valve. The main burner should shut off within approximately one second.

Tighten the thermocouple connection and re-light the pilot.

SHORT PARTS LIST - Page 27

Key No		PM Part No	G.C. Part No
1	Pilot and electrode assembly S.I.T. (inc. items 2 - 6)	907241	337 816
2	Pilot injector, 0.27mm S.I.T.	402892	395 674
3	Olive	402949	386 770
4	Tube nut	402948	386 771
5	Electrode	402885	395 720
6	Electrode securing nut	402886	336 974
7	Thermocouple, S.I.T.	402918	381 713
8	Gas Control valve, S.I.T. NOVA	402974	378 496
9	2.6mm Burner Injector 30C boiler	410989	338 516
	3.1mm Burner Injector 40C boiler	410990	338 517
	3.55mm Burner Injector SOC boiler	410994	289 120
	3.8mm Burner Injector 60C boiler	410993	338 520
10	Overheat Thermostat, RANCO	404509	378 501
11	Boiler Thermostat, RANCO K36	404510	378 550
12	Spark Generator VERNITRON	407693	382 887
13	Boiler Thermostat knob	225251	338 445
14	Flue Brush (optional extra)	212154	337 526
15	Pump Over-run Thermostat, THERMODISO	404519	173 061
16	Electrode lead	497722	338 515
17	Ranco spillage detector thermostat	404523	

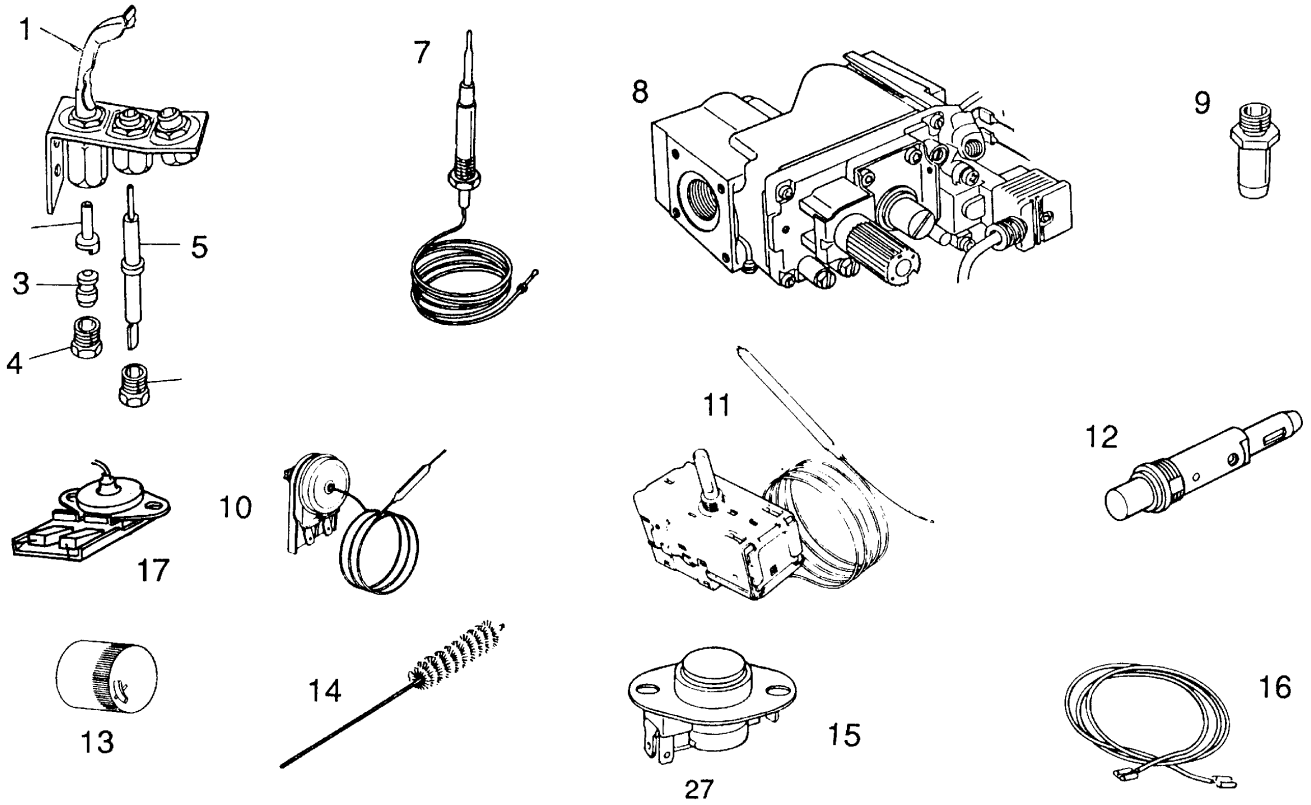

HEALTH AND SAFETY INFORMATION FOR THE INSTALLER AND SERVICE ENGINEER - Page 28

Under the Consumer Protection Act 1987 and section 6 of the Health and Safety at Work Act 1974, we are required to provide information on substances hazardous to health.
Small quantities of adhesives and sealants used in the product are cured and present no known hazards.
The following substances are also present.

Insulation & Seals

Material	-	Ceramic Fibre; Alumino - Silicone Fibre
Description	-	Boards, Ropes, Gaskets
Known Hazards	-	Some people can suffer reddening and itching of the skin. Fibre entry into the eye will cause foreign body irritation. Irritation to respiratory tract
Precautions	-	People with a history of skin complaints may be particularly susceptible to irritation. High dust levels are only likely to arise following harsh abrasion. In general, normal handling and use will not present discomfort, follow good hygiene practices, wash hands before consuming food, drinking or using the toilet
First Aid	-	Medical attention must be sought following eye contact or prolonged reddening of the skin.

Thermostat

Material	-	Contains very small quantities of xylene
Description	-	Sealed phial and capillary containing liquid
Known Hazards	-	Irritating to skin, eyes and throat. Vapour is harmful Inflammable - do not extinguish with water
Precautions	-	Do not incinerate Avoid contact with broken/leaking phials. Do not purposely puncture
First Aid	-	Eye/skin contact, wash with clean water, seek medical attention

Back Page

Publication No. 560018/1196