Installation & Service Instructions

Performa 30 HE

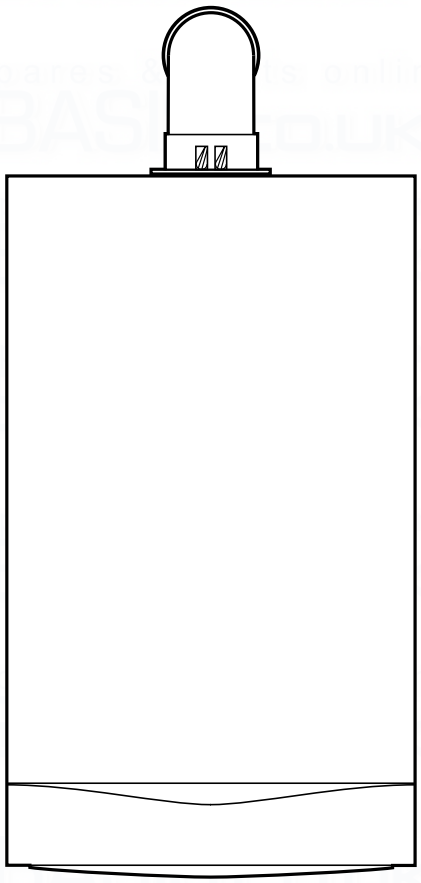

This is a Wall Mounted Powered Flue Condensing Combination Boiler Gas Fired Central Heating Unit.

The boiler meets the requirements of Statutory Instrument " The Boiler (Efficiency) Regulations 1993 N° 3083" and is deemed to meet the requirements of Directive 92/42/EEC on the energy efficiency requirements for new hot water boilers fired with liquid or gaseous fuels:-

Type test for purpose of Regulation 5 certified by:
Notified Body 0051.

Product/Production certified by:
Notified Body 0051.

For use in GB/IE only.

These instructions include the Benchmark Commissioning Checklist and should be left with the User for safe keeping.

Natural Gas

Potterton Performa 30 HE
G.C.N° 47 393 13

CONTENTS

Section		Page
	Legislation	4
1.0	Introduction	5
2.0	General Layout	6
3.0	Appliance Operation	7
4.0	Technical Data	8
5.0	Dimensions and Fixings	9
6.0	System Details	10
7.0	Site Requirements	13
8.0	Installation	19
9.0	Commissioning	24
10.0	Completion	26
11.0	Servicing	27
12.0	Changing Components	29
13.0	Electrical	39
14.0	Short Parts List	40
15.0	Fault Finding	41
	Benchmark Checklist	46

Building Regulations and the Benchmark Commissioning Checklist

Building Regulations (England & Wales) require notification of the installation of a heating appliance to the relevant Local Authority Building Control Department. From 1 April 2005 this can be achieved via a Competent Persons Self Certification Scheme as an option to notifying the Local Authority directly. Similar arrangements will follow for Scotland and will apply in Northern Ireland from 1 January 2006.

CORGI operate a Self Certification Scheme for gas heating appliances.

These arrangements represent a change from the situation whereby compliance with Building Regulations was accepted as being demonstrated by completion of the Benchmark Logbook (which was then left on site with the customer).

With the introduction of Self Certification Schemes, the Benchmark Logbook is being withdrawn. However, a similar document in the form of a commissioning checklist and service interval record is incorporated at the back of these instructions.

Potterton is a member of the Benchmark initiative and fully supports the aims of the programme. Its aim is to improve the standards of installation and commissioning of central heating systems in the UK and to encourage the regular servicing of all central heating systems to ensure safety and efficiency.

Building Regulations require that installations should comply with manufacturer's instructions. It is therefore important that the commissioning checklist is completed by the installer. The relevant section of Building Regulations only relates to dwellings. Therefore the checklist only applies if the appliance is being installed in a dwelling or some related structure.

The flowchart opposite gives guidance for installers on the process necessary to ensure compliance with Building Regulations.

This product has an energy rating (B) on a scale of A to G.
For more information see www.boilers.org.uk. This is a certification mark.

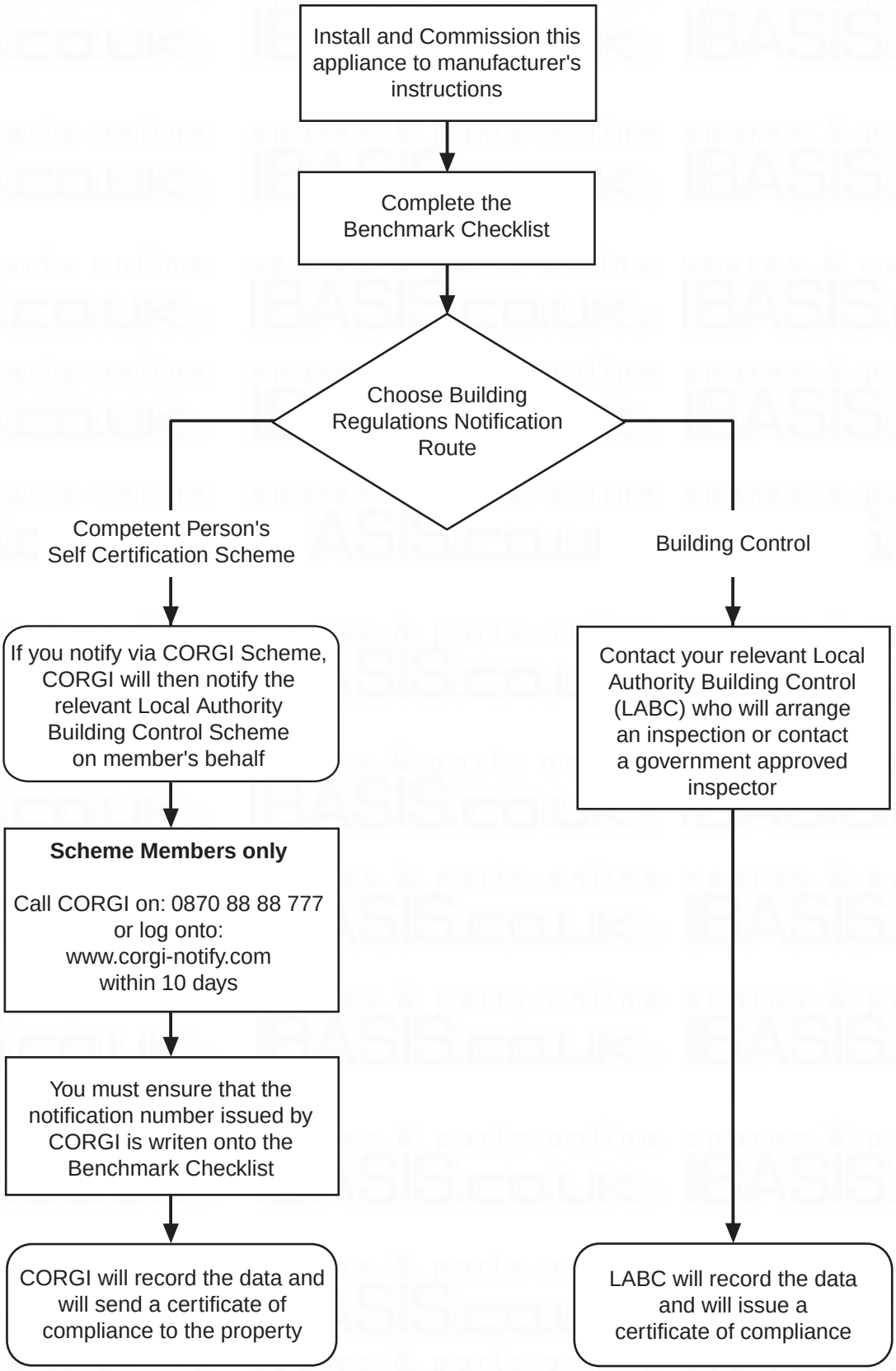
Install and Commission this appliance to manufacturer's instructions
Complete the Benchmark Checklist
Choose Building Regulations Notification Route
Competent Person's Self Certification Scheme
Building Control
If you notify via CORGI Scheme, CORGI will then notify the relevant Local Authority Building Control Scheme on member's behalf
Scheme Members only
Call CORGI on: 0870 88 88 777 or log onto: www.corgi-notify.com within 10 days
You must ensure that the notification number issued by CORGI is writen onto the Benchmark Checklist
CORGI will record the data and will send a certificate of compliance to the property
Contact your relevant Local Authority Building Control (LABC) who will arrange an inspection or contact a government approved inspector
LABC will record the data and will issue a certificate of compliance

LEGISLATION

IMPORTANT - Installation, Commissioning, Service & Repair

This appliance must be installed in accordance with the manufacturer's instructions and the regulations in force. Read the instructions fully before installing or using the appliance.

In GB, this must be carried out by a competent person as stated in the Gas Safety (Installation & Use) Regulations.

Definition of competence: A person who works for a CORGI registered company and holding current certificates in the relevant ACS modules, is deemed competent.

In IE, this must be carried out by a competent person as stated in I.S. 813 "Domestic Gas Installations".

Lifting - This product should be lifted and handled by two people. Stooping should be avoided and protective equipment worn where necessary. Carrying & lifting equipment should be used as required.

The addition of anything that may interfere with the normal operation of the appliance without express written permission from the manufacturer or his agent could invalidate the appliance warranty. In GB this could also infringe the Gas Safety (Installation and Use) Regulations.

Warning - Check the information on the data plate is compatible with local supply conditions.

All CORGI registered installers carry a CORGI identification card and have a registration number. You can check your installer is registered by telephoning 0870 4012300 or writing to:-

1 Elmwood,
Chineham Business Park,
Crockford Lane,
Basingstoke. RG24 8WG

or check online at www.corgi-gas-safety.com

Potterton declare that no substances harmful to health are contained in the appliance or used during appliance manufacture.

The appliance is suitable only for installation in GB and IE and should be installed in accordance with the rules in force, and only used in a suitably ventilated location.

In GB, the installation must be carried out by a CORGI Registered Installer. It must be carried out in accordance with the relevant requirements of the:

- Gas Safety (Installation & Use) Regulations.
- The appropriate Building Regulations either The Building Regulations, The Building Regulations (Scotland), Building Regulations (Northern Ireland).
- The Water Fittings Regulations or Water Byelaws in Scotland.
- The Current I.E.E. Wiring Regulations.

Where no specific instructions are given, reference should be made to the relevant British Standard Code of Practice.

In IE, the installation must be carried out by a competent Person and installed in accordance with the current edition of I.S. 813 'Domestic Gas Installations', the current Building Regulations and reference should be made to the current ETCI rules for electrical installation.

All systems must be thoroughly flushed and treated with inhibitor (see section 6.2).

Codes of Practice, most recent version should be used

In GB the following Codes of Practice apply:

Standard	Scope
BS 6891	Gas Installation.
BS 5546	Installation of hot water supplies for domestic purposes.
BS 5449	Forced circulation hot water systems.
BS 6798	Installation of gas fired hot water boilers.
BS 5440 Part 1	Flues.
BS 5440 Part 2	Ventilation.
BS 7074	Expansion vessels and ancillary equipment for sealed water systems.
BS 7593	Treatment of water in domestic hot water central heating systems.

In IE the following Codes of Practice apply:

Standard	Scope
I.S. 813	Domestic Gas Installations.

The following BS standards give valuable additional information;

BS 5546	Installation of hot water supplies for domestic purposes.
BS 5449	Forced circulation hot water systems.
BS 7074	Expansion vessels and ancillary equipment for sealed water systems.
BS 7593	Treatment of water in domestic hot water central heating systems.

1.0 INTRODUCTION

1.1 Description

1. The Potterton Performa 30 HE is a fully automatic gas fired wall mounted condensing combination boiler. It is room sealed and fan assisted, and will serve central heating and mains fed domestic hot water.

2. The boiler is set to give a maximum output of 29.4 kW.

3. It is designed for use on Natural Gas (G20) and can be converted to use Propane.

4. The boiler is suitable for use only on fully pumped sealed heating systems. Priority is given to domestic hot water.

5. The boiler data badge gives details of the model, serial number and Gas Council number and is situated on the control box. It is visible when the case front panel is removed (Fig. 1).

6. The boiler is intended to be installed in residential / commercial / light industrial E.M.C. environments on a governed meter supply only.

7. The boiler must be installed with one of the purpose designed flues such as the standard horizontal flue kit, part no. 5111073.

8. **All systems must be thoroughly flushed and treated with inhibitor (see section 6.2).**

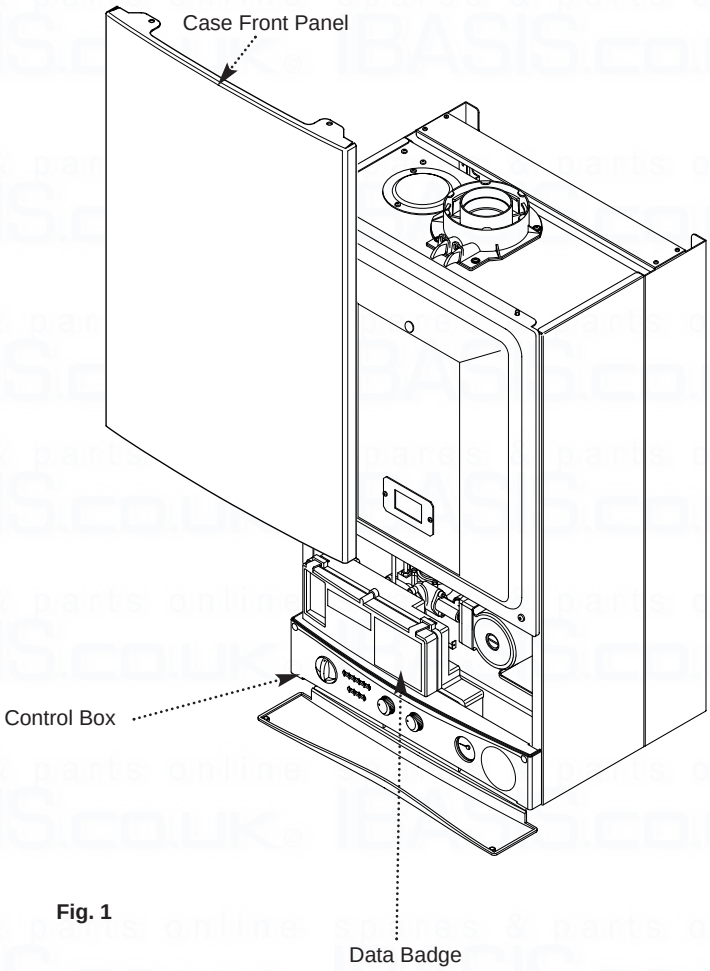

Fig. 1

1.2 Optional Extras

Various flue extensions, bends, vertical flue kits, control accessories etc. are available as optional extras. These are detailed in a separate publication

2.0 GENERAL LAYOUT

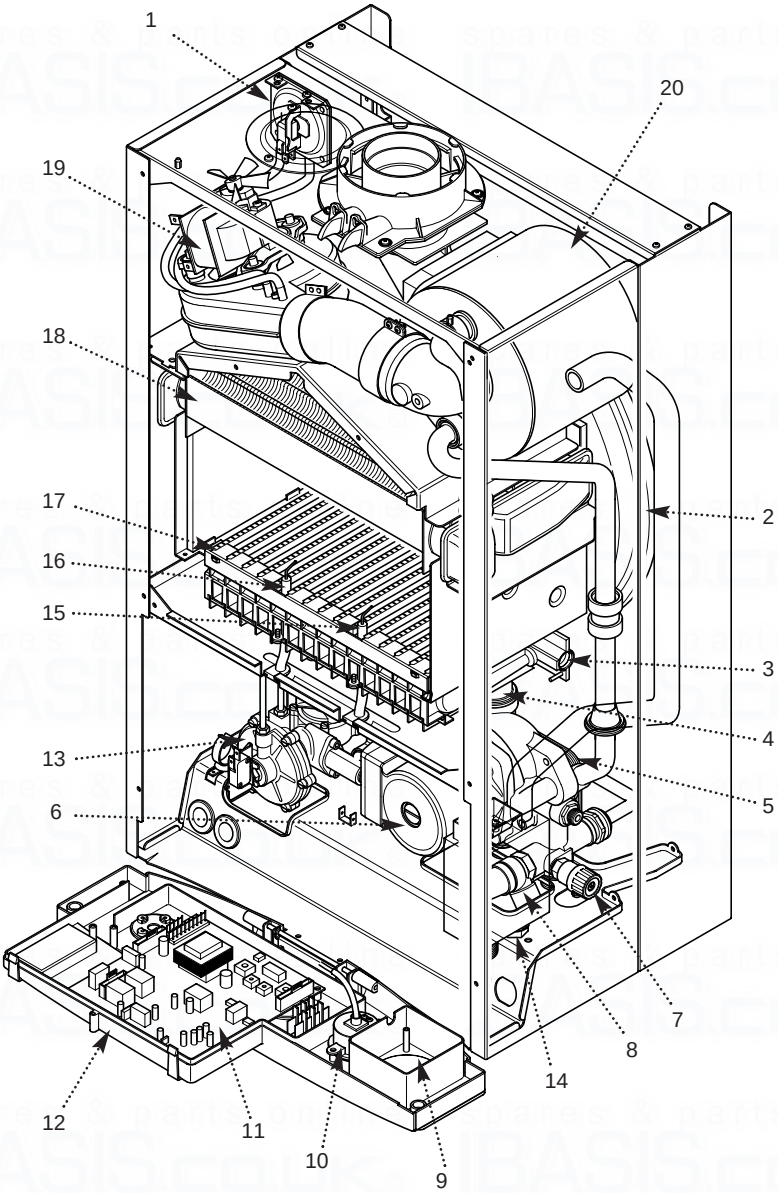

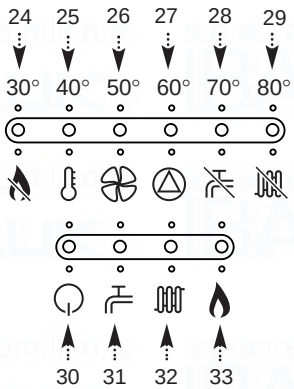

2.1 Layout

1. Air Pressure Switch
2. Expansion Vessel
3. Burner Manifold
4. Automatic Air Vent
5. DHW Plate Heat Exchanger
6. Circulation Pump
7. Drain Off Point
8. Pressure Relief Valve
9. Optional Integral Timer Position
10. Central Heating System Pressure Gauge
11. PCB
12. Control Box
13. 3-Way Valve Assembly
14. Condensate Trap
15. Flame Sensing Electrode
16. Spark Electrode
17. Burner
18. Primary Heat Exchanger
19. Fan Assembly
20. Secondary Heat Exchanger
21. On/Off/Reset Selector Switch
22. Central Heating Temperature Control
23. Hot Water Temperature Control
24. Flame Failure or Blocked Condensate Drain
25. Safety Thermostat Activated (Boiler or Flue)
26. Fault on Fan or Flue
27. Fault on Pump or Low System Pressure
28. Fault on Hot Water Sensor
29. Fault on Central Heating Sensor
30. Power On
31. Domestic Hot Water Mode
32. Central Heating Mode
33. Burner On

When neons 24 to 29 are constantly illuminated, they indicate the temperature of the central heating water.

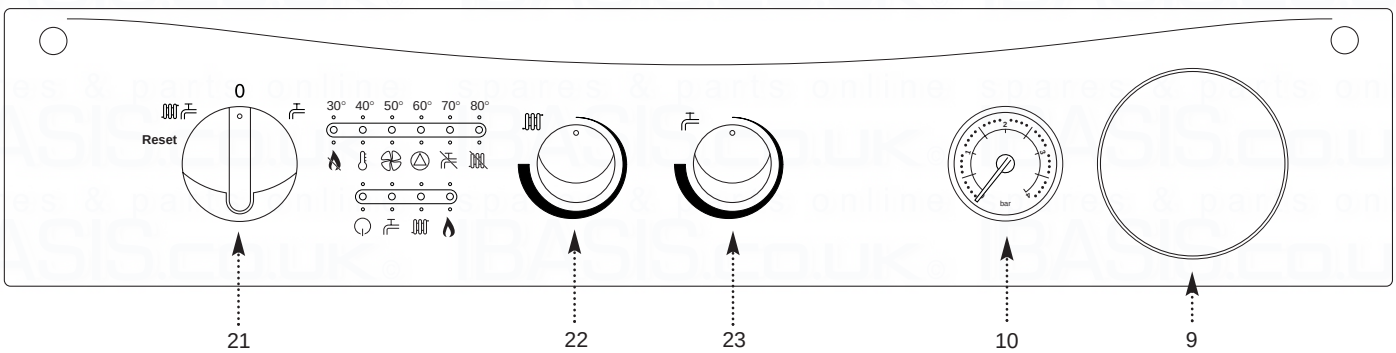

3.0 APPLIANCE OPERATION

NOTE: All delay timers mentioned in 3.1 and 3.2 are overridden by domestic hot water demand.

3.1 Central Heating Mode (Fig. 2)

1. With a demand for heating, the pump circulates water through the primary circuit. At a pre-determined flow rate the central heating flow switch operates, initiating the ignition sequence.

2. The main burner ignites at low rate, then the gas valve controls the gas rate to maintain the heating temperature measured by the temperature sensor.

3. When the flow temperature exceeds the setting temperature, a 3 minute delay occurs before the burner relights automatically (anti-cycling). The pump continues to run during this period.

4. When the demand is satisfied the burner is extinguished and the pump continues to run for a period of 3 minutes (Pump Overrun).

3.2 Domestic Hot Water Mode (Fig. 3)

1. Priority is given to the domestic hot water supply. A demand at a tap or shower will override any central heating requirement.

2. The flow of water will operate the DHW flow switch which requests the 3 way valve to change position. This will allow the pump to circulate the primary water through the DHW plate heat exchanger.

3. The burner will light automatically and the temperature of the domestic hot water is controlled by the temperature sensor.

4. When the domestic hot water demand ceases the burner will extinguish and the diverter valve will remain in the domestic hot water mode, unless there is a demand for central heating.

IMPORTANT: When the selector switch is in the '0' (Off) position the electrical supply to the boiler is isolated. The boiler will not operate and the integral timer (if fitted) will require resetting once the selector switch is set to either Position (i) or Position (ii).

3.3 Frost Protection Mode

1. The frost protection mode is integral to the appliance and functions only with the selector switch (see Section 2.1) in the domestic hot water and central heating position. If the system temperature falls below 5° C then the boiler will fire on its minimum setting until a flow temperature of 30° C is reached. Further protection can be incorporated by using a system frost thermostat.

3.4 Pump Protection

1. With the selector switch (see Section 2.1) in either the central heating or central heating and domestic hot water position, the pump will automatically operate for 1 minute in every 24 hours to prevent sticking.

Central Heating Circuit

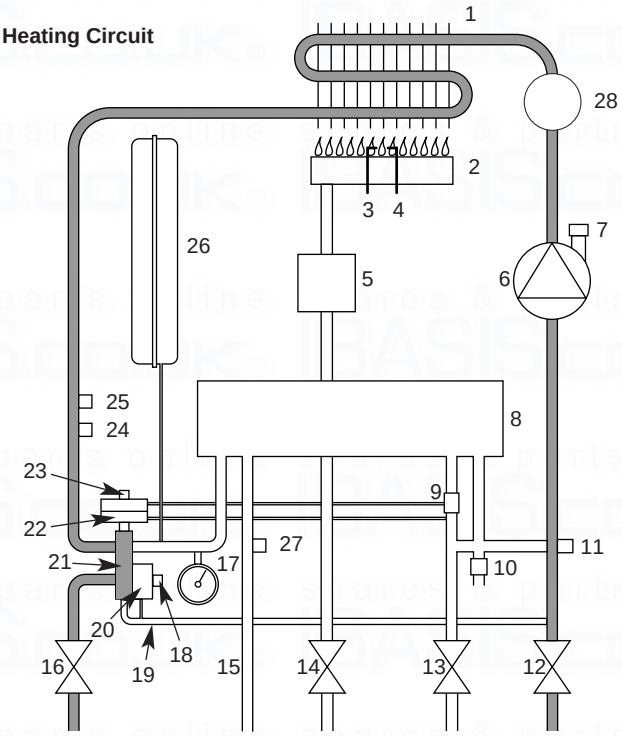

Fig. 2

Key

1 Primary Heat Exchanger
2 Burner
3 Ignition Electrode
4 Flame Sensing Electrode
5 Gas Valve
6 Pump
7 Automatic Air Vent
8 Plate Heat Exchanger
9 Flow Sensor with Filter
10 Pressure Relief Valve
11 Boiler Drain Point
12 Heating Return
13 Cold Water Inlet On/Off Valve and Filter
14 Gas Inlet
15 Domestic Hot Water Outlet
16 Heating Flow
17 Pressure Gauge
18 Hydraulic Differential Pressure Sensor Microswitch
19 Automatic By-Pass
20 Hydraulic Differential Pressure Sensor
21 Diverter Valve Assembly
22 Domestic Hot Water Flow Priority Assembly
23 Domestic Hot Water Flow Priority Microswitch
24 Safety Thermostat
25 Central Heating Temperature Sensor
26 Expansion Vessel
27 Domestic Hot Water Temperature Sensor
28 Secondary Heat Exchanger

Domestic Hot Water Circuit

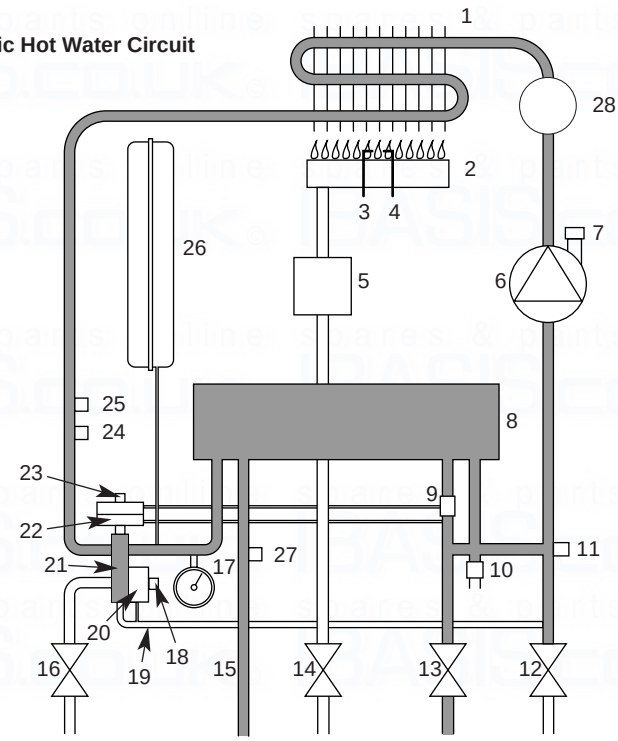

Fig. 3

4.0 TECHNICAL DATA

4.1 Performa 30 HE

Appliance Type	C_{12}	C_{32}
Appliance Category	CAT II $_{2H\ 3P}$	

Heat Input CH

	Max	Min
kW	30.5	11.9

Heat Output CH (Non-Condensing)

	Max	Min
kW	29.6	11

Heat Output CH (Condensing)

	Max	Min
kW	31	11.3

Heat Input DHW

	Max
kW	30.5

Heat Output DHW

	Max
kW	29.6

Max Gas Rate (Natural Gas - G20) (After 10 mins)

m³/h	3.22

Burner Pressure (Natural Gas - G20)

	Max Rate	Min Rate
mbar	12.1 ± 0.5	2.1 ± 0.2

Inlet Pressure (Natural Gas - G20)
mbar 20

Burner Injector (Natural Gas - G20)
15 x 1.25mm Diameter

Electrical Supply 230V~ 50H_Z
(Appliance must be connected to an earthed supply)

Power Consumption 180W

External Fuse Rating 3A

Internal Fuse Rating
Fuse 2A Fast Blow to BS 4265

Electrical Protection
IPX5D

NO_X Class 3

Condensate Drain 1" BSP

Flue Terminal Dimensions		
	Diameter	100mm
	Projection	125mm

Connections		copper tails
Gas Supply	-	22mm
Central Heating Flow	-	22mm
Central Heating Return	-	22mm
Cold Water Mains Inlet	-	15mm
DHW Flow	-	15mm
Pressure Relief Discharge	-	15mm

Outercase Dimensions		
Casing Height	-	780mm
Overall Height Inc Flue Elbow	-	965mm
Casing Width	-	450mm
Casing Depth	-	345mm

Clearances	
Above Casing	200 mm Min
Below Casing	200 mm Min
Front	450 mm Min (For Servicing)
Front	5 mm Min (In Operation)
L.H. Side	5 mm Min
R.H. Side	5 mm Min (In Operation)
	20mm Min (See Note*)

***NOTE: The boiler can be operated with a clearance of 5mm at the right. This is also sufficient for routine maintenance. However a clearance of 20mm is required if it is necessary to remove the secondary heat exchanger. This should be considered when siting the appliance and in the event of any subsequent alterations in the area of installation**

Weights	kg
Packaged Boiler Carton	54
Installation Lift Weight	44

Central Heating Primary Circuit Pressures

	bar
Safety Discharge	3
Max Operating	2.5
Min Operating	0.5
Recommend Operating	1-2

DHW Circuit Pressures	bar
Max Operating	8
Min Operating	0.2
Min Operating Pressure at 12.7 l/min	0.96

Flow Rates	l/min
DHW Flow Rate @ 30°C Rise	14.1
DHW Flow Rate @ 35°C Rise	12.1
Min Working DHW Flow Rate	2.5

Pump
Available Head See graph below

Expansion Vessel - (For Central Heating only. Integral with appliance)

	bar
Min Pre-charge Pressure	0.5
	litre
Max Capacity of CH System	125
Primary Water Content of Boiler (unpressurised)	1.2

Temperatures
C.H. Flow Temp (adjustable)
35°C to 85°C max (± 5°C)

D.H.W. Flow Temp (adjustable)
35°C to 65°C max (± 5°C)
dependent upon flow rate

SEDBUK Declaration For Performa 30 HE

The seasonal efficiency (SEDBUK) is 87.3% (89.4% LPG) Band B

This value is used in the UK Government's Standard Assessment Procedure (SAP) for energy rating of dwellings. The test data from which it has been calculated have been certified by 0051.

LPG Propane - G31			
Burner Injector 15 x 0.77mm diameter			
Burner Pressure		Max Rate	Min Rate
Propane	mbar	32.3 ± 0.5	5.2 ± 0.2
Inlet Pressures			
	mbar	37	

Pump - Available Head

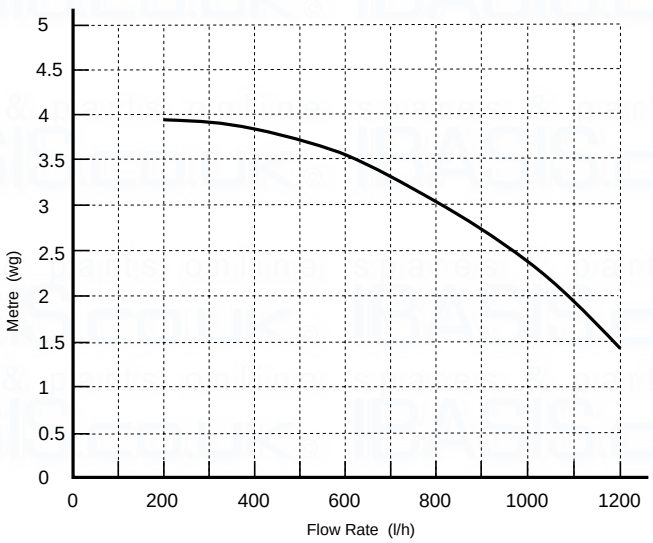

5.0 DIMENSIONS AND FIXINGS

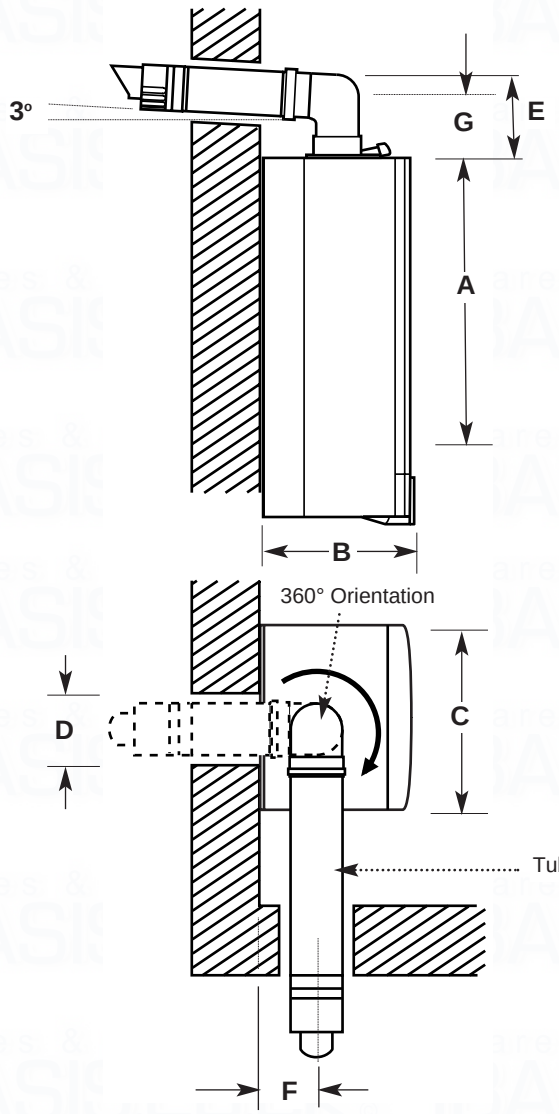

Dimensions	
A	780mm
B	345mm
C	450mm
D	116mm Ø Min.
E	185mm
F	190mm
G	131mm

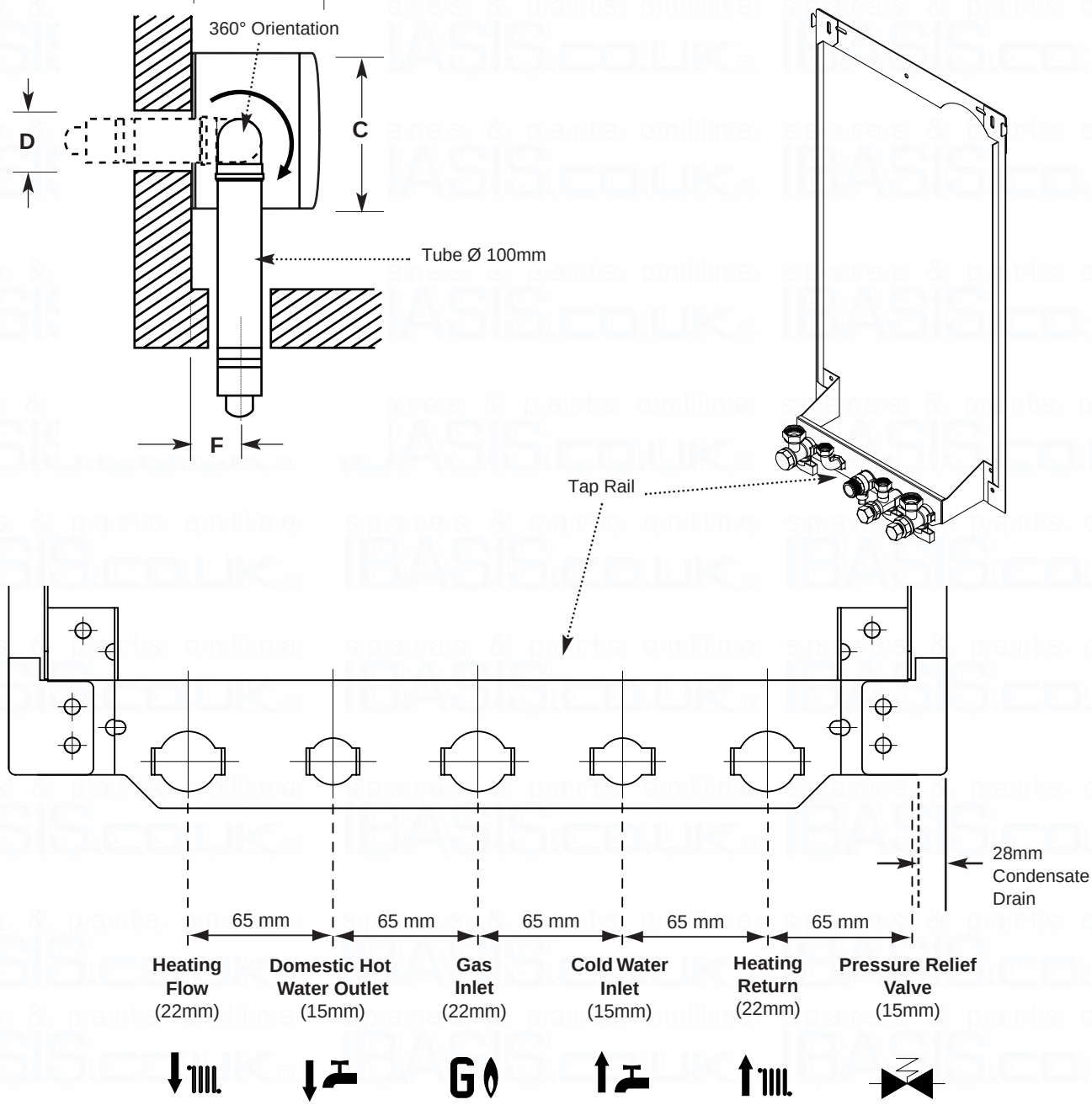

6.0 SYSTEM DETAILS

6.1 Information

1. The Potterton Performa 30 HE Condensing Combination Boiler is a 'Water Byelaws Scheme - Approved Product'.
To comply with the Water Byelaws your attention is drawn to the following installation requirements and notes (IRN).

a) IRN 001 - See text of entry for installation requirements and notes.
b) IRN 302 - Byelaw 14.

2. Reference to the WRc publications, 'Water fittings and materials directory' and 'Water supply byelaws guide' give full details of byelaws and the IRNs.

6.2 Central Heating Circuit

1. The appliance is suitable for fully pumped SEALED SYSTEMS ONLY.

Treatment of Water Circulating Systems

- All recirculatory water systems will be subject to corrosion unless an appropriate water treatment is applied. This means that the efficiency of the system will deteriorate as corrosion sludge accumulates within the system, risking damage to pump and valves, boiler noise and circulation problems.

- When upgrading existing systems that exhibit evidence of sludging, it is advisable to clean the system prior to treatment in order to remove any sludge and reduce the likelihood of these deposits damaging new components.

- When fitting new systems flux will be evident within the system, which can lead to damage of system components.

- All systems must be thoroughly drained and flushed out. The recommended flushing and cleansing agents are Betz-Dearborn Sentinel X300 or X400 and Fernox Superfloc Universal Cleanser which should be used following the flushing agent manufacturer's instructions.

- System additives - corrosion inhibitors and flushing agents/descalers should be suitable for aluminium and comply to BS7593 requirements. The only system additives recommended are Betz-Dearborn Sentinel X100 and Fernox-Copal which should be used following the inhibitor manufacturer's instructions.

Failure to flush and add inhibitor to the system will invalidate the appliance warranty.

- It is important to check the inhibitor concentration after installation, system modification and at every service in accordance with the manufacturer's instructions. (Test kits are available from inhibitor stockists.)

- For information or advice regarding any of the above contact the Technical Enquiries.

6.3 Bypass

1. The boiler is fitted with an automatic integral bypass.

6.4 System Control

1. The boiler is designed for use in a heating system that incorporates external controls, i.e. a minimum of a timer device.

2. Suitable timer kits are available as optional extras.

3. For optimum operating conditions and maximum economy the fitting of a programmable room thermostat is recommended.

6.5 System Filling and Pressurising

1. A filling point connection on the central heating return pipework must be provided to facilitate initial filling and pressurising and also any subsequent water loss replacement/refilling.

2. There are connection points on the mains cold water inlet and central heating return isolating taps (Fig. 5) to which the optional filling loop kit (Part No. 248221) can be assembled.

3. The filling method adopted must be in accordance with all relevant water supply regulations and use approved equipment.

4. Your attention is drawn to:
for GB: Guidance G24.2 and recommendation R24.2 of the Water Regulations Guide.
for IE: the current edition of I.S. 813 “Domestic Gas Installations”.

5. The sealed primary circuits may be filled or replenished by means of a temporary connection between the circuit and a supply pipe, provided a ‘Listed’ double check valve or some other no less effective backflow prevention device is permanently connected at the inlet to the circuit and the temporary connection is removed after use.

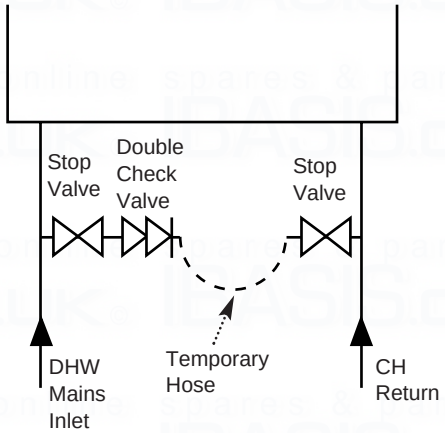

Fig. 4

6.6 Expansion Vessel
(Central Heating only)

1. The appliance expansion vessel is pre-charged to 0.5 bar. Therefore, the minimum cold fill pressure is 0.5 bar. The vessel is suitable for correct operation for system capacities up to 125 litres. For greater system capacities an additional expansion vessel must be fitted. For GB refer to BS 7074 Pt 1. For IE, the current edition of I.S. 813 “Domestic Gas Installations”.

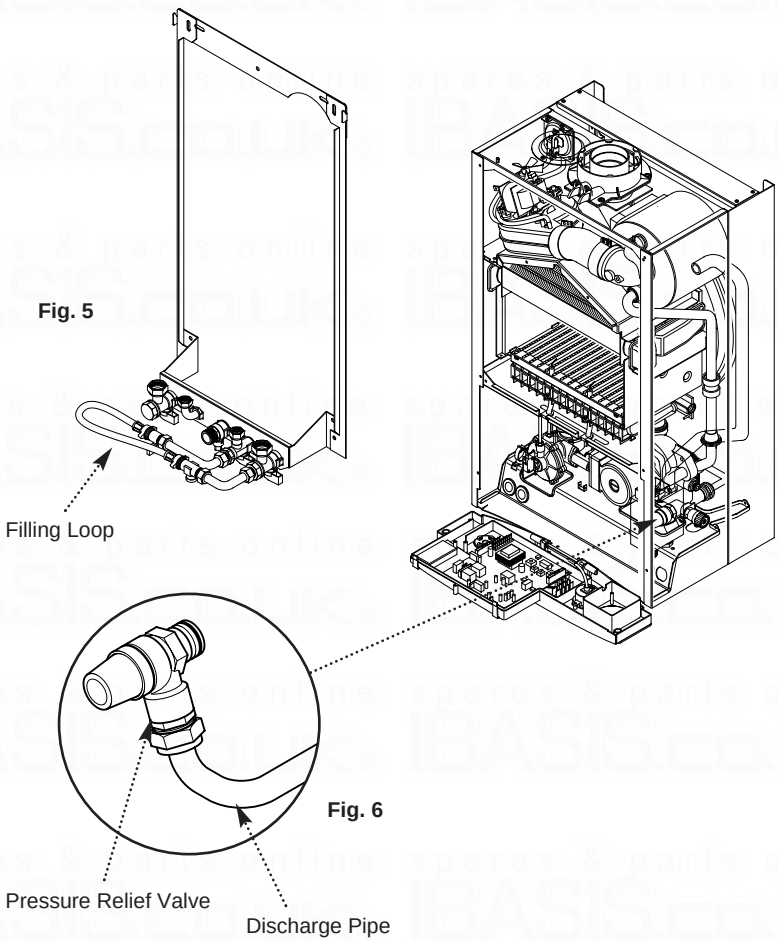

Fig. 5

Fig. 6

6.7 Pressure Relief Valve (Fig. 6)

1. The pressure relief valve is set at 3 bar, therefore all pipework, fittings, etc. should be suitable for pressures in excess of 3 bar.

2. The pressure relief discharge pipe should be not less than 15mm dia, run continuously downward, and discharge outside the building, preferably over a drain. It should be routed in such a manner that no hazard occurs to occupants or causes damage to wiring or electrical components. The end of the pipe should terminate facing down and towards the wall.

3. The discharge must not be above a window, entrance or other public access. Consideration must be given to the possibility that boiling water/steam could discharge from the pipe.

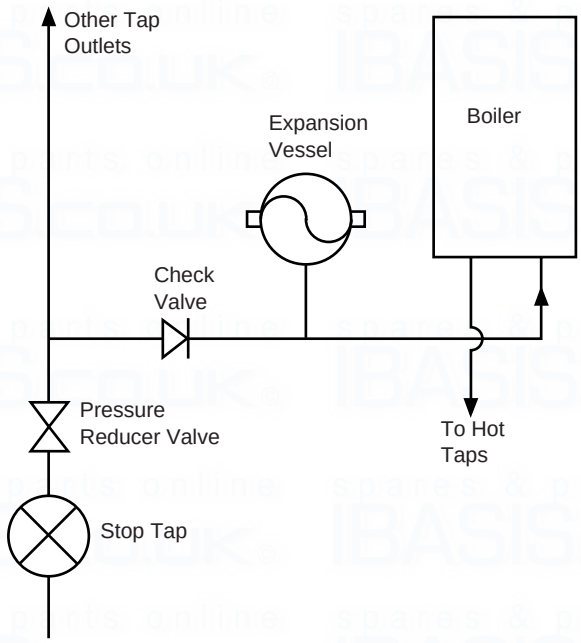

Fig. 7

6.0 SYSTEM DETAILS

6.8 Domestic Hot Water Circuit (Fig. 7)

1. All DHW circuits, connections, fittings, etc. should be fully in accordance with relevant standards and water supply regulations.

2. Your attention is drawn to:
for GB: Guidance G17 to G24 and recommendation R17 to R24 of the Water Regulations Guide.
for IE: the current edition of I.S. 813 “Domestic Gas Installations”.

3. A single check valve must be fitted as shown in Fig. 7 to prevent backflow to the supply pipe and to ensure the efficient operation of the expansion vessel which is required to accommodate the thermal expansion of the water.

4. When the domestic water system includes any device which prevents water expanding back towards the supply (check valve, loose jumpered stopcock, water meter, water treatment device) then an expansion vessel must be fitted (eg. Zilmet 160ml, R$^1/_2$ 15bar).

5. If the hot water expansion is not provided for, then high pressures can develop which may result in damage to fittings and devices on the system.

6. The boiler’s maximum working mains pressure is 8 bar, therefore all pipework, connections, fittings, etc. should be suitable for pressures in excess of 8 bar. A pressure reducing valve must be fitted for pressures in excess of 8 bar. The manufacturer of any outlet fittings, such as a shower valve, may require a lower maximum pressure. The pressure reduction must take account of all fittings connected to the DHW system.

6.9 Showers

1. If a shower control is supplied from the appliance it should be of the thermostatic or pressure balanced type. Thermostatic type shower valves provide the best comfort and guard against water at too high a temperature. Existing controls may not be suitable - refer to the shower valve manufacturer.

6.10 Hard Water Areas

1. If the area of the installation is recognised as a HARD WATER AREA then a suitable device should be fitted to treat the mains water supply to the boiler. Contact your Water Distribution Company for advice on suitable devices.

7.0 SITE REQUIREMENTS

7.1 Location

1. The boiler may be fitted to any suitable wall with the flue passing through an outside wall or roof and discharging to atmosphere in a position permitting satisfactory removal of combustion products and providing an adequate air supply. The boiler should be fitted within the building unless otherwise protected by a suitable enclosure i.e. garage or outhouse. (The boiler may be fitted inside a cupboard-see Section 7.3).

2. If the boiler is sited in an unheated enclosure then it is recommended to leave the ON/OFF Selector Switch in the domestic hot water and central heating position to give frost protection.

3. If the boiler is fitted in a room containing a bath or shower reference must be made to the relevant requirements.
In GB this is the current I.E.E. Wiring Regulations and Building Regulations.
In IE reference should be made to the current edition of I.S. 813 “Domestic Gas Installations” and the current ETCI rules.

4. If the boiler is to be fitted into a building of timber frame construction then reference must be made to the current edition of Institute of Gas Engineers Publication IGE/UP/7 (Gas Installations in Timber Framed Housing).

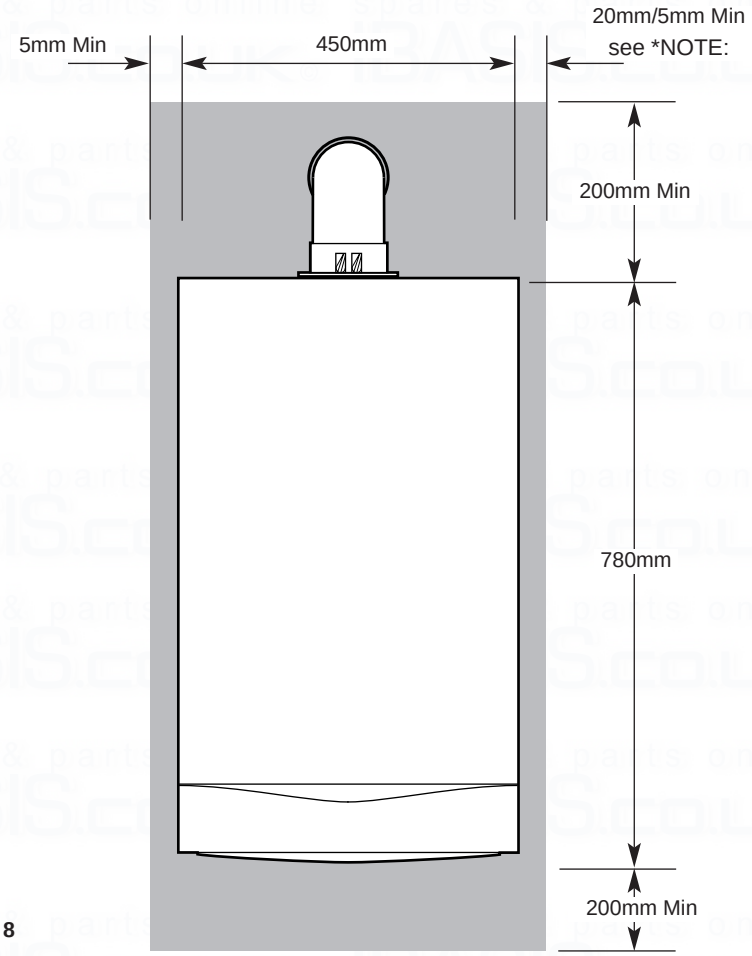

Fig. 8

7.2 Clearances (Figs. 8 & 9)

1. A flat vertical area is required for the installation of the boiler.

2. These dimensions include the necessary clearances around the boiler for case removal, spanner access and air movement. Additional clearances may be required for the passage of pipes around local obstructions such as joists running parallel to the front face of the boiler.

***NOTE:** The boiler can be operated with a clearance of 5mm at the right. This is also sufficient for routine maintenance. However a clearance of 20mm is required if it is necessary to remove the secondary heat exchanger. This should be considered when siting the appliance and in the event of any subsequent alterations in the area of installation.

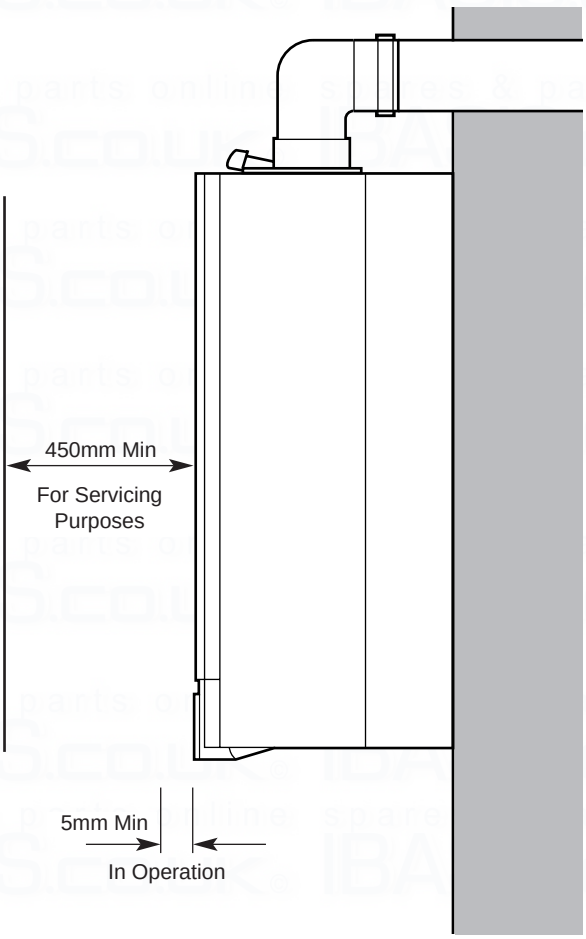

Fig. 9

7.0 SITE REQUIREMENTS

7.3 Ventilation of Compartments

1. Where the appliance is installed in a cupboard or compartment, no air vents are required.

2. BS 5440: Part 2 refers to room sealed appliances installed in compartments. The appliance will run sufficiently cool without ventilation.

7.4 Gas Supply

1. The gas installation should be in accordance with the relevant standards. In GB this is BS 6891. In IE this is the current edition of I.S. 813 “Domestic Gas Installations”.

2. The connection to the appliance is a 22mm copper tail located at the rear of the gas service cock (Fig. 10).

3. Ensure that the pipework from the meter to the appliance is of adequate size. Do not use pipes of a smaller diameter than the boiler gas connection (22mm).

7.5 Electrical Supply

1. External wiring must be correctly earthed, polarised and in accordance with relevant regulations/rules. In GB this is the current I.E.E. Wiring Regulations. In IE reference should be made to the current edition of ETCI rules.

2. The mains supply is 230V ~ 50H_Z fused at 3A.

NOTE: The method of connection to the electricity supply must facilitate complete electrical isolation of the appliance.

Connection may be via a fused double-pole isolator with a contact separation of at least 3mm in all poles and servicing the boiler and system controls only.

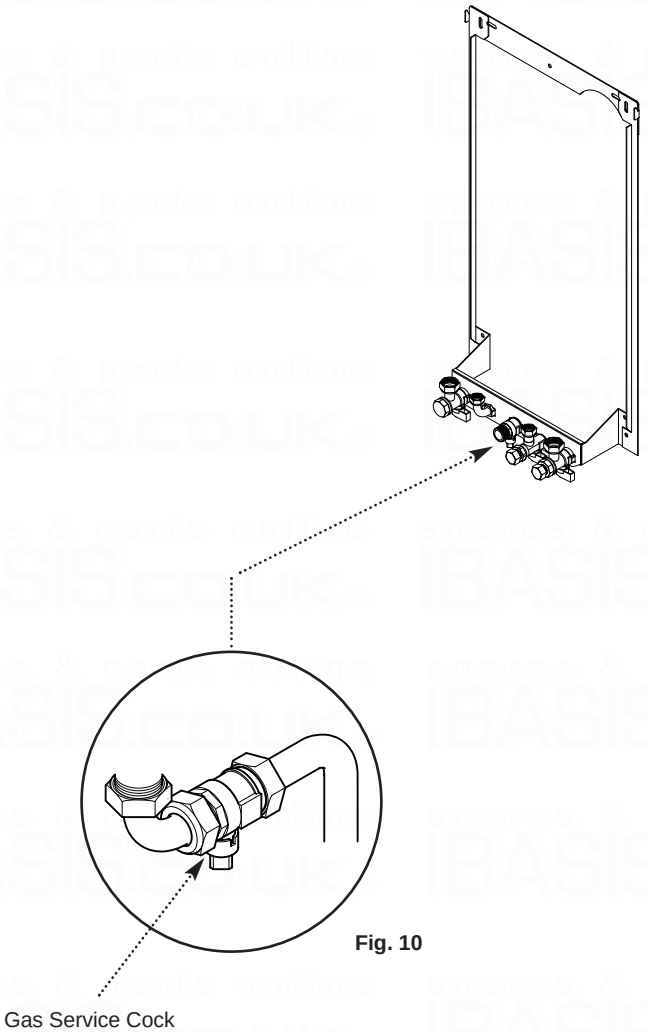

Fig. 10

7.6 Condensate Drain

FAILURE TO INSTALL THE CONDENSATE DISCHARGE PIPEWORK CORRECTLY WILL AFFECT THE RELIABLE OPERATION OF THE BOILER

The condensate discharge pipe MUST NOT RISE at any point along its length. There MUST be a fall of AT LEAST 2.5° (50mm per metre) along the entire run.

1. The condensate outlet terminates in a 1" BSP nut and seal for the connection of 21.5mm (3/4in) plastic overflow pipe which should generally discharge internally into the household drainage system. If this is not possible, discharge into an outside drain is acceptable.

2. Ensure the discharge of condensate complies with any national or local regulations in force.
BS 6798:2000 & Part H1 of the Building Regulations give further guidance.

3. The discharge pipe should be run in a proprietary drain pipe material e.g. PVC, PVC-U, ABS, PVC-C or PP.

4. Metal pipework is NOT suitable for use in condensate discharge systems.

5. The pipe should be a minimum of 21.5mm diameter and must be supported using suitably spaced clips to prevent sagging.

6. **Any pipe fitted externally must not exceed 3 metres.**

7. **Any condensate discharge pipework external to the building (or in an unheated part of it e.g. garage) must be insulated to protect against frost. It is also recommended that the pipe diameter is increased to 32mm.**

8. If the boiler is fitted in an unheated location the entire condensate discharge pipe should be treated as an external run.

9. In all cases discharge pipe must be installed to aid disposal of the condensate. To reduce the risk of condensate being trapped, as few bends and fittings as possible should be used.

10. When discharging condensate into a soil stack or waste pipe the effects of existing plumbing must be considered. If soil pipes or waste pipes are subjected to internal pressure fluctuations when WC's are flushed or sinks emptied then back-pressure may force water out of the boiler trap and cause appliance lockout.

Examples are shown of the following methods of termination:-
i) to an internal soil & vent pipe
ii) via an internal discharge branch (e.g. sink waste)
iii) to a drain or gully
iv) to a purpose made soakaway

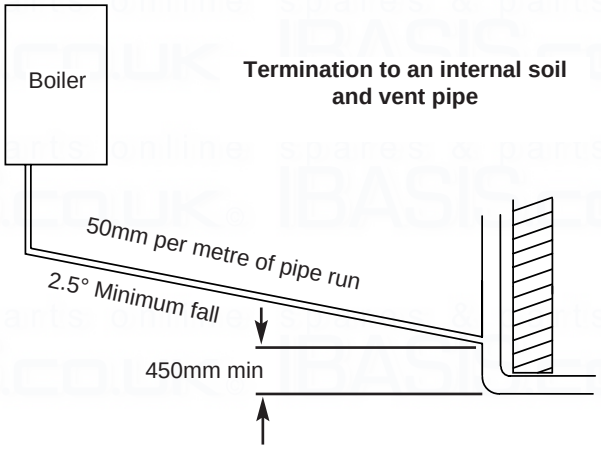

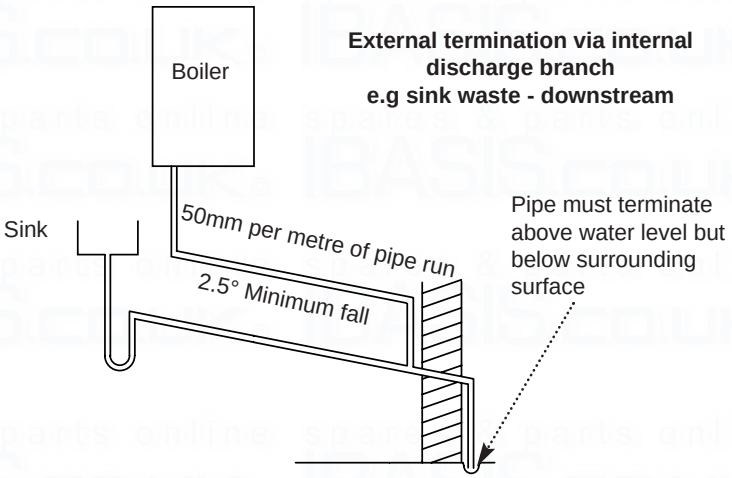

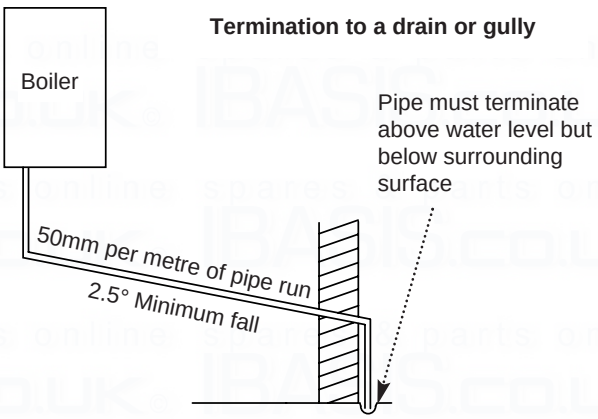

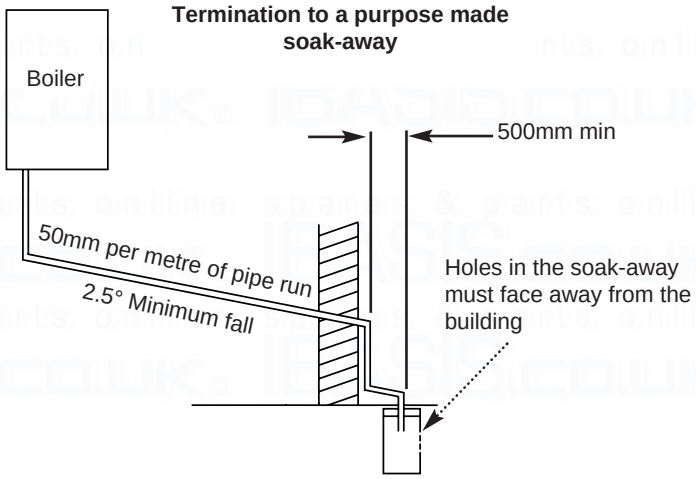

7.0 SITE REQUIREMENTS

7.7 Flue

NOTE: Due to the nature of the boiler a plume of water vapour will be discharged from the flue. This should be taken into account when siting the flue terminal.

1. The following guidelines indicate the general requirements for siting balanced flue terminals. For GB recommendations are given in BS 5440 Pt 1. For IE recommendations are given in the current edition of I.S. 813 “Domestic Gas Installations”.

2. If the terminal discharges onto a pathway or passageway, check that combustion products will not cause a nuisance and that the terminal will not obstruct the passageway.

3. If a terminal is less than 2 metres above a balcony, above ground or above a flat roof to which people have access, then a suitable terminal guard must be provided.

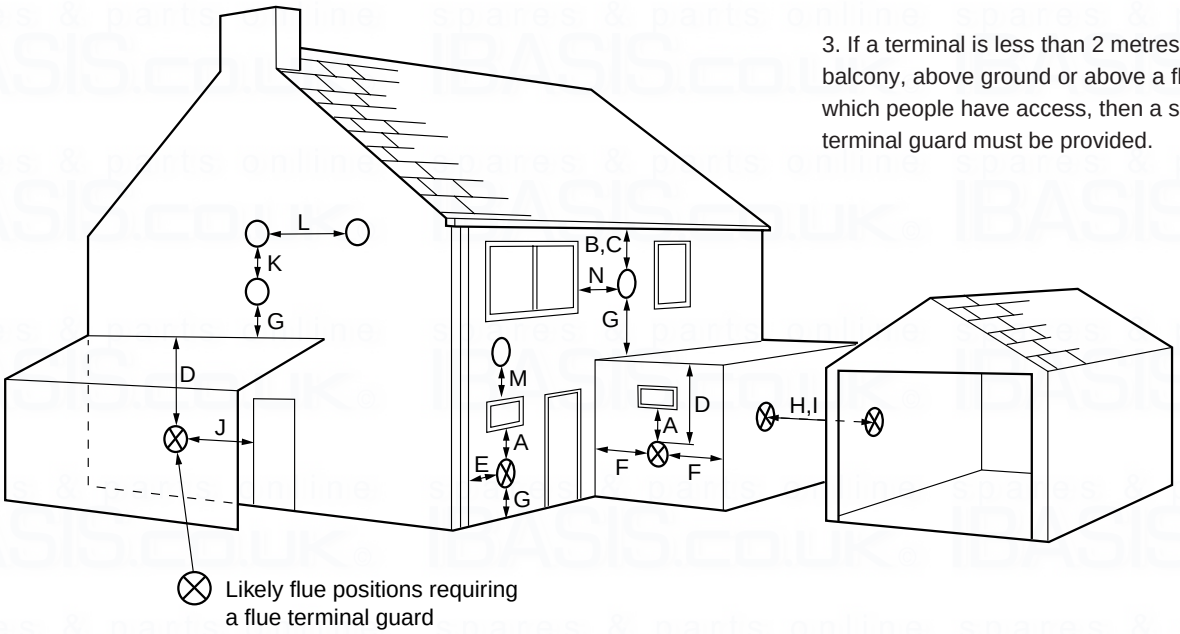

Fig. 11

	Terminal Position with Minimum Distance (Fig. 11)	(mm)
A*	Directly below an openable window, air vent or any other ventilation opening.	300
B	Below gutter, drain/soil pipe.	25
C	Below eaves.	25
D	Below a balcony/car port roof.	25
E	From vertical drain pipes and soil pipes.	25
F	From internal or external corners.	25
G	Above adjacent ground or balcony level.	300
H	From a surface facing a terminal.	600
I	Facing a terminals.	1200
J	From opening (door/window) in carport into dwelling.	1200
K	Vertically from a terminal on the same wall.	1500
L	Horizontally from a terminal on the same wall.	300
M*	Above an opening, air brick, opening window etc.	300
N*	Horizontally to an opening, air brick, opening window etc.	300

* In addition, the terminal should be no nearer than 150mm to an opening in the building fabric formed for the purpose of accommodating a built-in element such as a window frame. See BS 5440 Pt. 1.

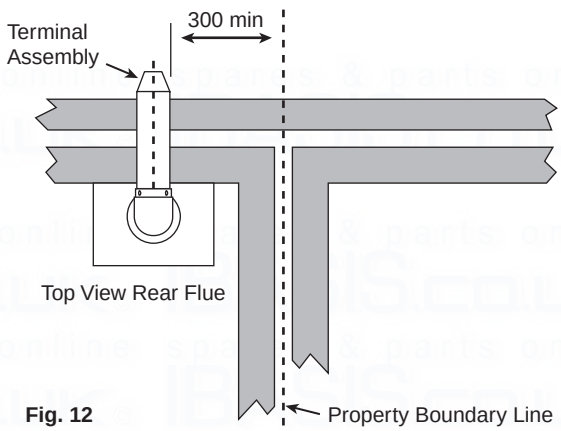

Fig. 12

7.8 Flue Dimensions

The standard horizontal flue kit allows for flue lengths between 100mm and 685mm from elbow to terminal (Fig. 13).

The maximum permissible equivalent flue length is: 3 metres

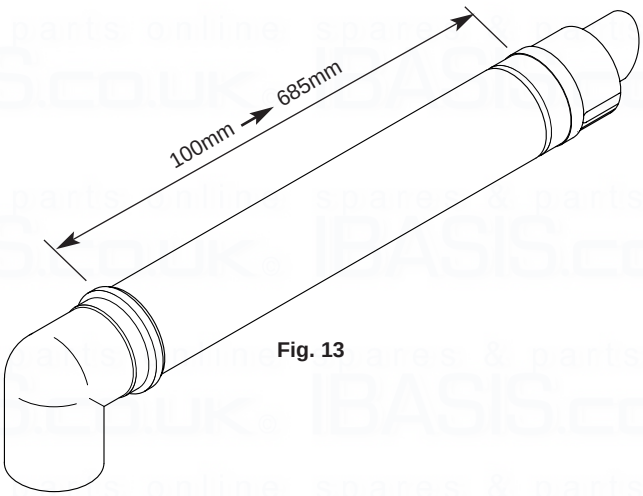

Fig. 13

7.9 Flue Trim

1. The rubber flue trim supplied may be fitted to either the outside wall or on the inner wall of installation.

7.10 Terminal Guard (Fig. 14)

1. When codes of practice dictate the use of terminal guards, they can be obtained from most Plumbers' and Builders' Merchants.

2. There must be a clearance of at least 50mm between any part of the terminal and the guard.

3. When ordering a terminal guard, quote the appliance name and model number.

4. The flue terminal guard should be positioned centrally over the terminal and fixed as illustrated.

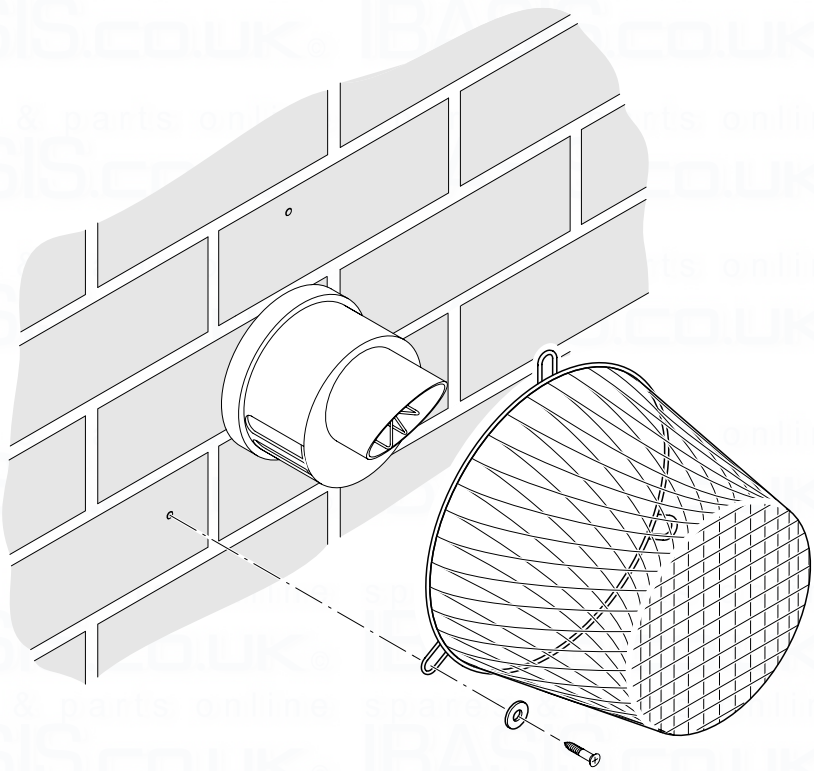

Fig. 14

7.0 SITE REQUIREMENTS

7.11 Flue Options

1. The Potterton Performa 30 HE can be fitted with flue systems as illustrated.

2. The standard flue is suitable only for horizontal applications.

3. Maximum permissible equivalent flue lengths are:-

Horizontal Concentric	3metres
Vertical Concentric	3metres
Vertical Twin Pipe	12metres

4. Any additional “in line” bends in the flue system must be taken into consideration.
Their equivalent lengths are:-
Concentric Pipes:

45° bend	0.5 metres
93° bend	1.0 metres

Twin Flue Pipe

45° bend	0.25 metres
91.5° bend	0.50 metres

The elbow supplied with the standard horizontal flue is not included in any equivalent length calculations

5. The illustrations opposite show examples of maximum equivalent lengths.

6. Instructions for guidance and fitting are included in each kit, where appropriate.

NOTE: Flue length is measured from point A to B as shown.

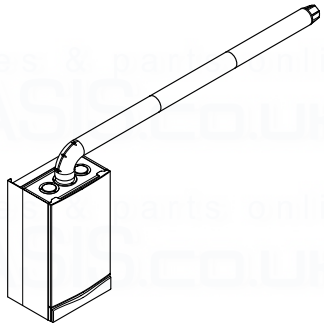

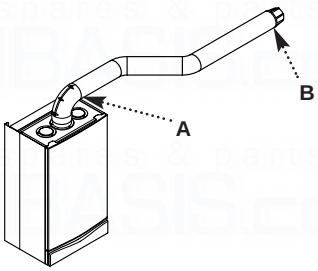

Horizontal Flues

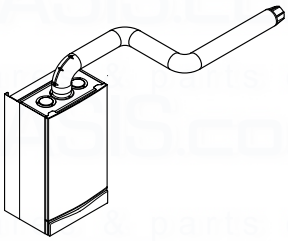

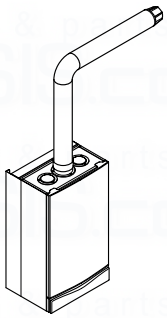

Vertical Flues (Twin Pipe)

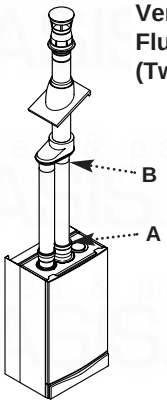

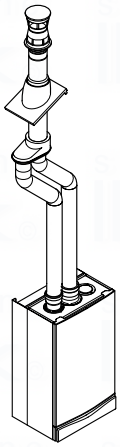

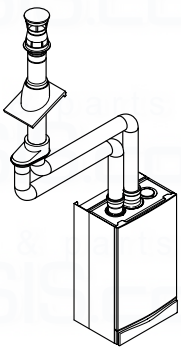

Vertical Flues

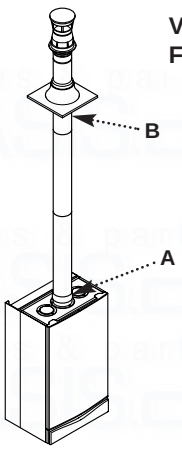

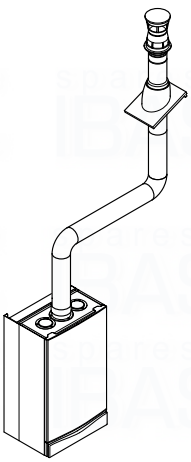

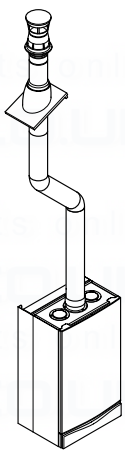

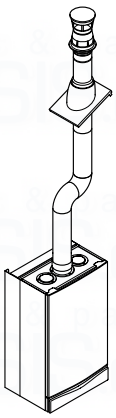

8.0 INSTALLATION

8.1 Initial Preparation

The gas supply, gas type and pressure must be checked for suitability before connection (see Section 7.4).

1. After considering the site requirements (see Section 7.0) position the fixing template on the wall ensuring it is level both horizontally and vertically.

2. Mark the position of the two most suitable fixing slots for the wall plate and boiler lower fixing holes. It is preferable to use the horizontal fixing slots.

3. Mark the position of the centre of the flue hole (rear exit). For side flue exit, mark as shown (Fig. 16).

4. Note the shaded area on the template. Pipework may be routed upwards behind the boiler, providing it does not conflict with the shaded area.

5. If required, mark the position of the gas and water pipes. Remove the template.

6. Cut the hole for the flue (minimum diameter 116mm).

7. Drill the wall as previously marked to accept the wall plugs supplied. Secure the wall plate using the fixing screws.

8. Using a spirit level ensure that the plate is level before finally tightening the screws.

9. Connect the gas and water pipes to the valves on the wall plate using the copper tails supplied. Ensure that the sealing washers are fitted between the connections.

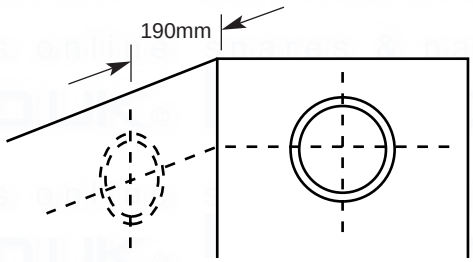

For Side Flue Exit

Fig. 16

8.2 Flushing

1. Connect a tube to the central heating flow or return pipe (Fig. 17).

2. Flush thoroughly (see System Details, Section 6.2).

8.3 Preparing The Boiler

1. Remove all packaging.

2. Stand the boiler on its base by using the rear lower edge as a pivot.

NOTE: A small amount of water may drain from the boiler in the upright position.

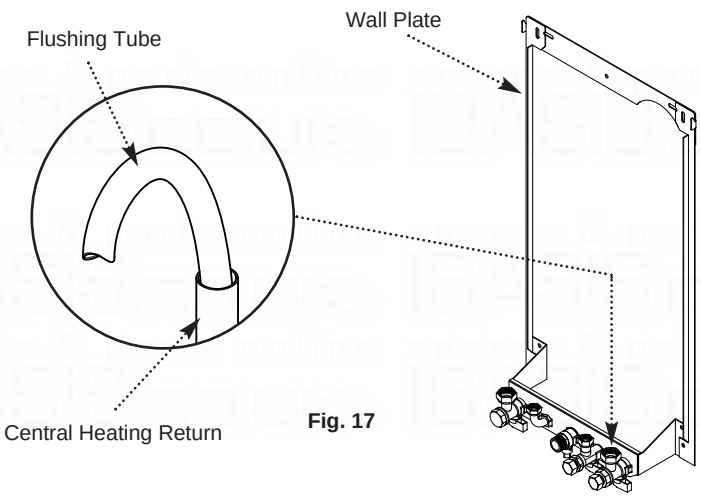

Fig. 17

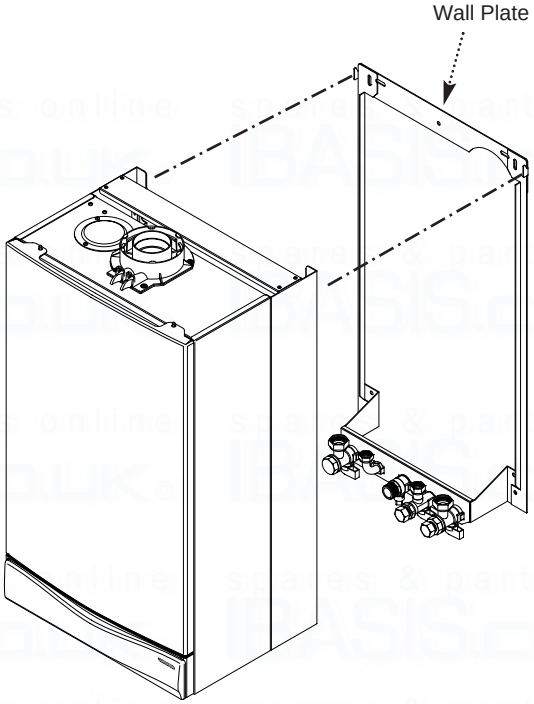

Fig. 18

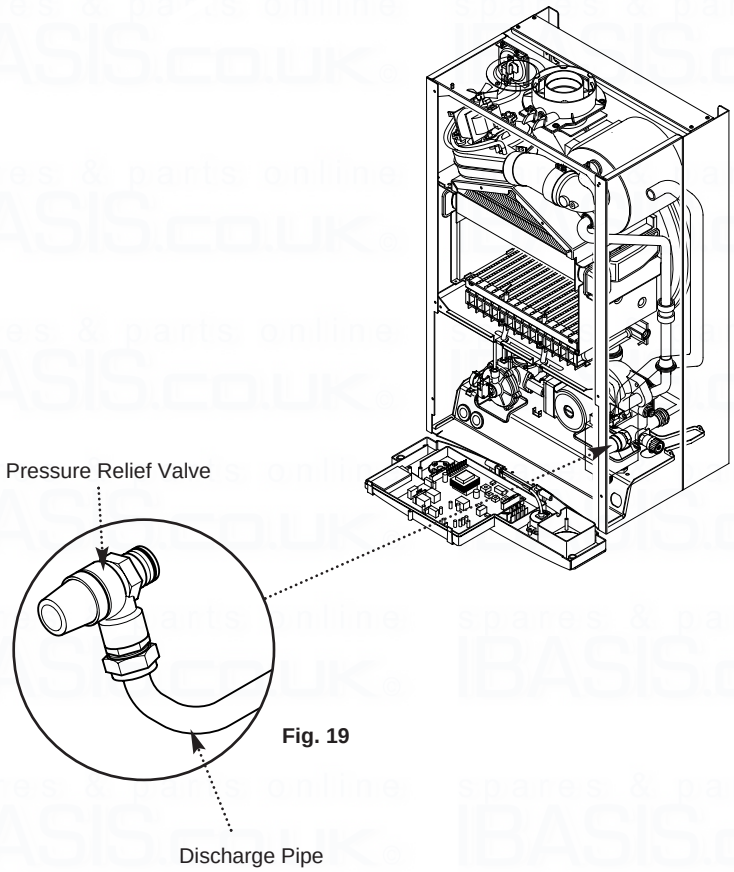

Fig. 19

8.0 INSTALLATION

8.4 Fitting The Boiler

1. Remove the sealing caps from the boiler connections.

2. Lift the boiler using the lower edges. Engage the slots at the top rear of the boiler on the wall plate (Fig. 18).

3. Insert the sealing washers between the valves and pipes on the wall plate and the boiler connections. **The rubber washers must be used on the gas connection.**

4. Tighten all the connections.

8.5 Fitting the Pressure Relief Discharge Pipe (Fig. 19)

1. Remove the discharge pipe from the kit.

2. Determine the routing of the discharge pipe in the vicinity of the boiler. Make up as much of the pipework as is practical, including the discharge pipe supplied.

3. The pipework must be at least 15mm diameter and run continuously downwards to a discharge point outside the building. See section 6.7 for further details.

4. Utilising one of the sealing washers, connect the discharge pipe to the adaptor and tighten the nut.

5. Complete the discharge pipework and route it to the outside discharge point.

IMPORTANT: Make all soldered joints before connecting to the pressure relief valve.

8.6 Condensate Drain (see section 7.6)

1. Connect the condensate drain using the 1” BSP nut and seal supplied.

Ensure the discharge of condensate complies with any national or local regulations in force (see British Gas “Guidance Notes for the Installation of Domestic Gas Condensing Boilers”.

2. The condensate outlet terminates in a 1” BSP nut and seal for the connection of 21.5mm (3/4in) plastic overflow pipe which should generally discharge internally into the household drainage system. If this is not possible, discharge into an outside drain is acceptable.

8.7 Fitting The Flue

HORIZONTAL FLUE

1. The standard flue is suitable for lengths between 100mm minimum and 685mm maximum, as measured from the edge of the flue elbow outlet to the joint between the terminal and air duct (Fig. 20).

2. Locate the flue elbow on the adaptor at the top of the boiler. Set the elbow to the required orientation (Fig. 21).

NOTE: The flue elbow is angled at 93 degrees to ensure a fall back to the boiler.

3. Measure the distance from the outside wall face to the elbow. This dimension will be known as 'X' (Fig. 22).

4. To dimension 'X' add 50mm. This dimension to be known as 'Y'.

IMPORTANT: Check all dimensions before cutting.

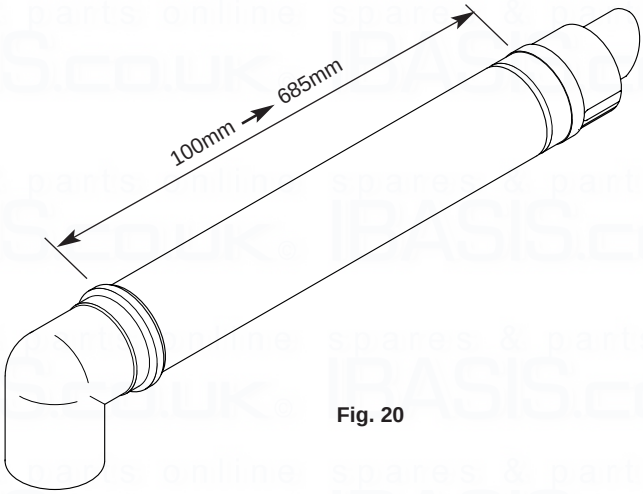

Fig. 20

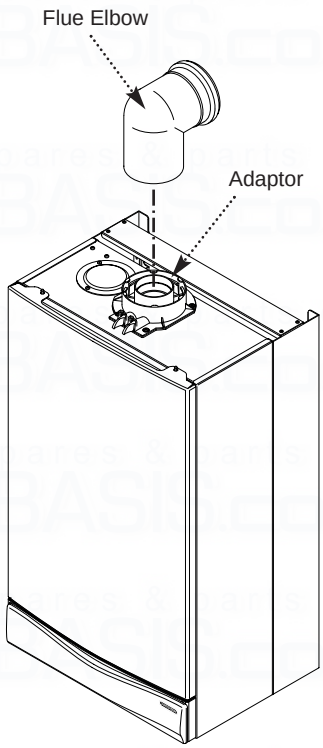

Fig. 21

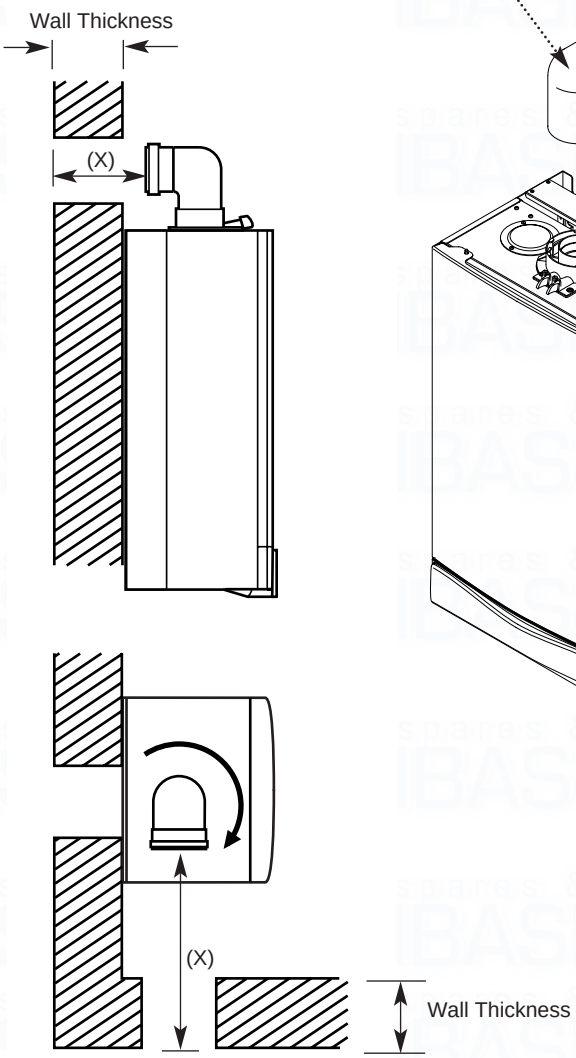

Fig. 22

8.0 INSTALLATION

8.7 Fitting the Flue (Cont)

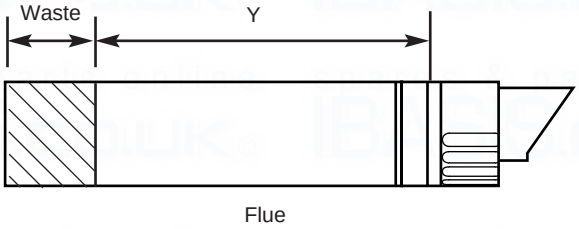

Fig. 23

5. Mark dimension 'Y' on the flue as shown (Fig. 23). Carefully cut the waste material from the flue, ensuring that the ducts are square and free from burrs.

6. The inner flue duct support bracket may be in the waste portion of the flue. In this case retrieve the bracket before discarding the waste.

7. Take the inner flue support bracket (if not already fitted) and engage it over the flue duct. This will centralise the flue and air ducts, and ease assembly (Fig. 24).

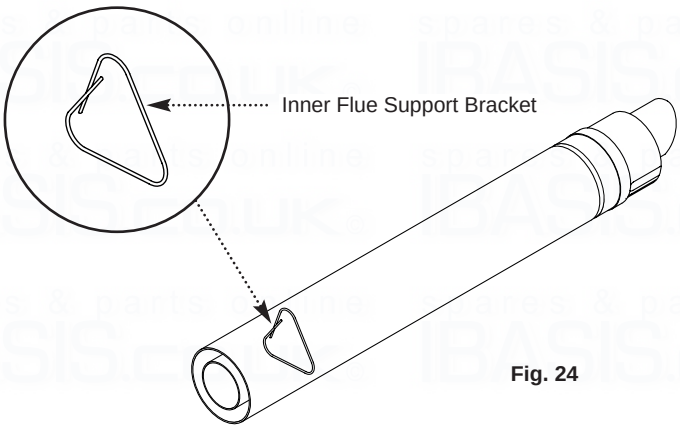

Fig. 24

8. Insert the flue through the hole in the wall. Fit the elbow to the boiler adaptor, ensuring that it is pushed fully in.

9. Draw the flue back through the wall and engage it in the elbow. It may be necessary to use soap solution or similar to ease assembly of the elbow adaptor and flue (Fig. 25).

10. Make good between the wall and air duct outside the building.

11. Fit the flue trim if required, and if necessary fit a terminal guard (see Section 7.9 & 7.10).

VERTICAL FLUE

1. Only a flue approved with the Potterton Performa 30 HE can be used.

2. For information on vertical flues consult the Potterton Flue Guide brochure.

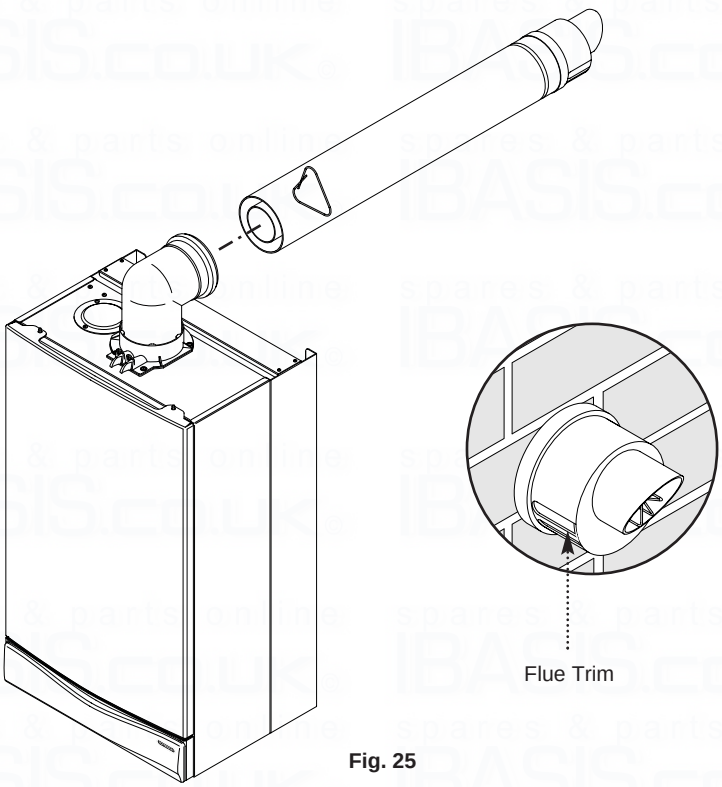

Fig. 25

8.8 Making The Electrical Connections

To connect the mains input cable proceed as follows:-

1. Slacken the facia panel securing screws and lift the outercase panel so that its securing tabs are clear of the facia. Remove the panel.

2. Completely undo the screws securing the facia panel and hinge it down (Fig. 26).

3. Remove the control box cover securing screws. Disengage the barbs on the control box from the cover. Remove the cover (Fig. 27).

4. Slacken the cable clamp on the LH side of the boiler chassis (Fig. 28). Insert the cable through the clamp and route it to the terminal block.

5. Slacken the screws in the terminal block, connect the input cable, and tighten the screws.

6. If an external control is to be connected it can be done at this point. Run the input cable from the external control through the second cable clamp on the boiler chassis. Refer to the instructions supplied with the control.

7. To connect external control(s) remove the link between terminals 1 & 2. The 230V supply at terminal 1 can be connected to the external control. The switched output from the external control must be connected to terminal 2. (Fig. 29).

NOTE: If the room thermostat being used incorporates an anticipator it MUST be wired as shown in Fig. 29

IMPORTANT: The external control **MUST** be suitable for 230V switching.

8. Ensure that both mains input and, where fitted, external control input cables have sufficient slack to allow the control box to drop down. Tighten the cable clamp(s) on the boiler chassis.

9. If the optional integral timer is to be used it should be fitted at this point. Refer to the instructions supplied with the timer. **NOTE:** An external frost thermostat cannot be used with the integral timer.

8.9 Preliminary Electrical Checks

1. Prior to commissioning the boiler preliminary electrical system checks should be carried out.

2. These should be performed using a suitable meter, and include checks for Ground Continuity, Resistance to Ground, Short Circuit and Polarity.

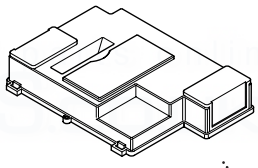

Fig. 27

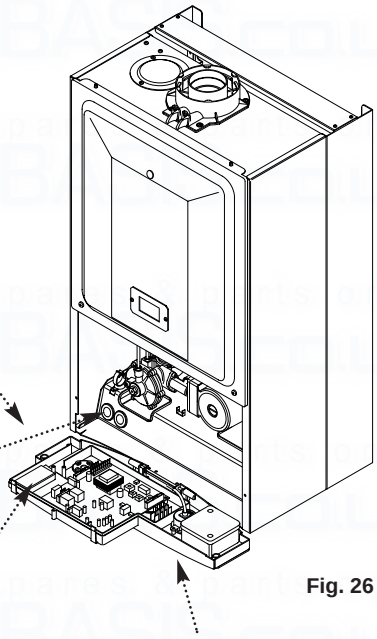

Fig. 26

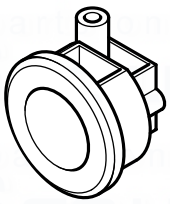

Fig. 28

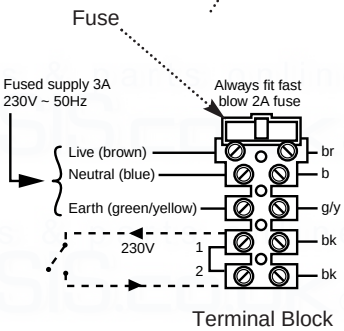

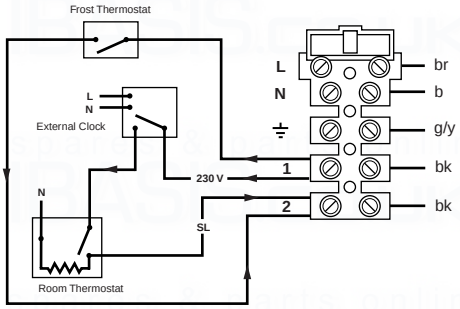

IMPORTANT: If an integral timer is fitted to the boiler an external frost thermostat wired as shown will not operate correctly. Only external timers may be used in such installations, as in the diagram.

Fig. 29

Functional Flow Diagram

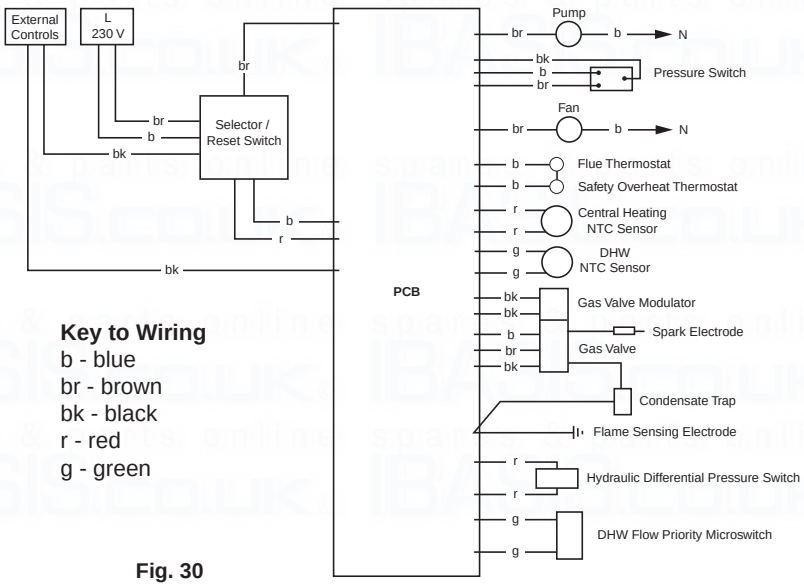

Key to Wiring
b - blue
br - brown
bk - black
r - red
g - green

Fig. 30

9.0 COMMISSIONING

9.1 Commissioning the Boiler

1. Reference should be made to BS 5449 Section 5 when commissioning the boiler.

2. Open the mains water supply to the boiler.

3. Open all hot water taps to purge the DHW system.

4. Ensure that the filling loop is connected and open, then open the heating flow and return valves on the boiler.

5. Open the screw on the automatic air vent (Fig. 31).

6. The system must be flushed in accordance with BS 7593 (see Section 6.2) and the flushing agent manufacturers instructions.

7. Pressurise the system to 1.0 bar then close and disconnect the filling loop.

8. Turn the gas supply on and purge according to in GB BS 6891 and in IE I.S. 813 “Domestic Gas Installations”.

9. Test for gas soundness.

10. If at any time during commissioning it is required to terminate a particular cycle, e.g. the pump overrun period, turn the selector to the OFF position and then back to either ( ) or ( ) (Fig. 33).

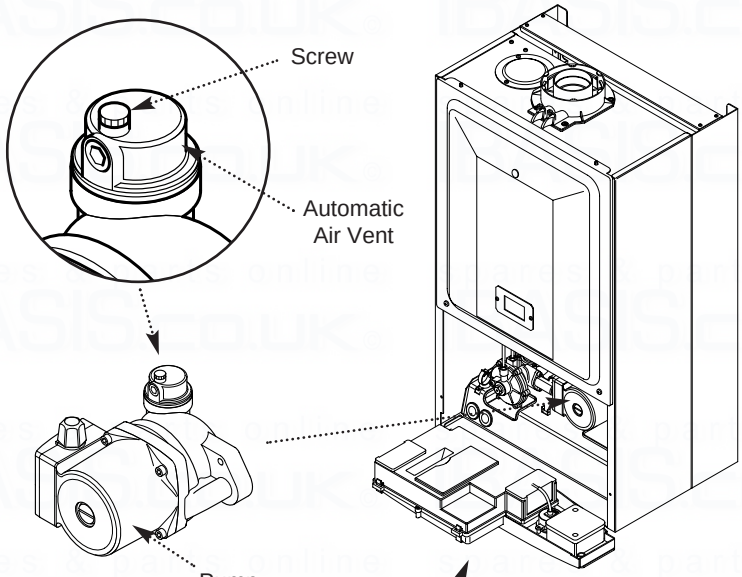

Fig. 31

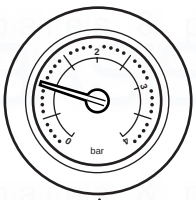

Fig. 32

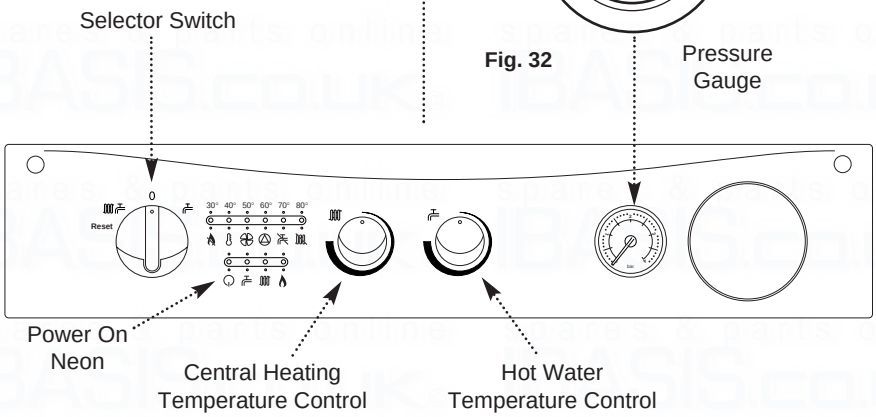

Fig. 33

9.2 Checking the Burner Pressure

1. Turn on the gas and electrical supplies to the boiler and ensure that all external controls are calling for heat.

2. Set the temperature controls to maximum and the selector switch to the Off position (Fig. 37).

3. Slacken the pressure test point sealing screw on the gas valve and connect a pressure gauge (Fig. 34).

4. Undo the screws securing the inner door panel. Lift the panel slightly to disengage it from the studs on top of the case.

5. Turn the selector switch fully anticlockwise against the spring pressure to the reset position and hold for 2 seconds to reset the boiler (Fig. 37).

6. Turn the selector switch to the Cental Heating and Domestic Hot Water position ( ). The power On neon ( ) will illuminate (Fig. 37).

7. Turn a hot water tap on to give a flow rate of at least 10 l/min.

8. The pressure should be as quoted in Section 4.0 Technical Data. If not, check that the gas supply pressure is correct (Natural Gas 20mbar, and Propane 37mbar).

9. The pressure can be adjusted if required.

10. To check and set minimum pressure first remove one of the modulator wires.

Adjusting the Pressure (Fig. 35)

11. Remove the plastic protection cap from the pressure adjustment nuts on the valve.

12. The smaller nut (5mm) adjusts minimum pressure and the larger nut (8mm) maximum pressure.

13. Using a suitable spanner adjust the relevant nut until the correct pressure is achieved.

14. Once the pressure has been set turn the boiler off and disconnect the pressure gauge.

15. Tighten the pressure test screw and refit the modulator to the valve. Reassemble in reverse order.

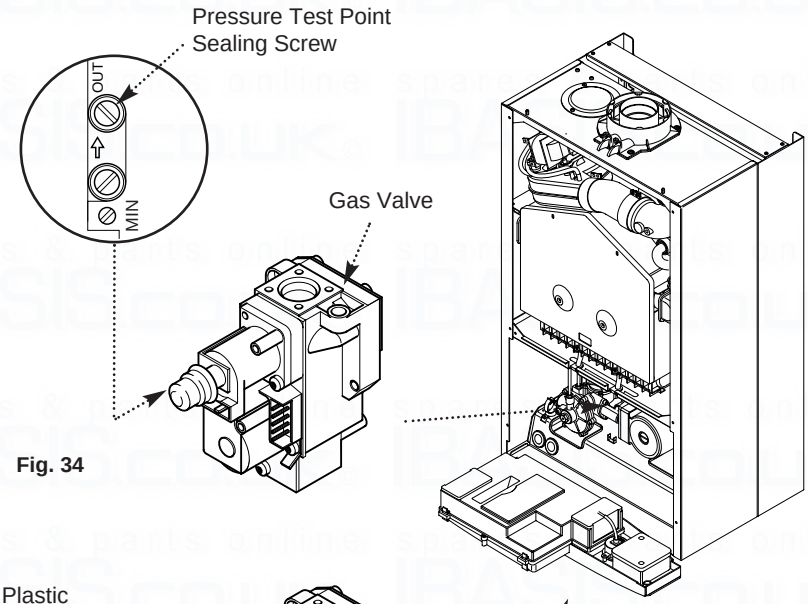

Fig. 34

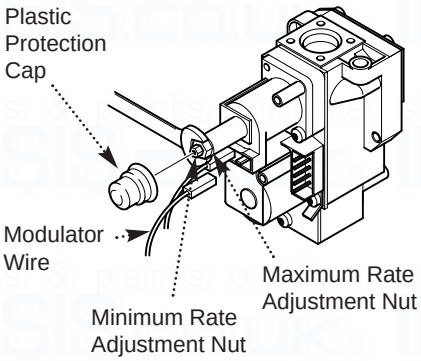

Fig. 35 **NOTE:** Gas Valve Electrical Plug/Igniter not shown for clarity

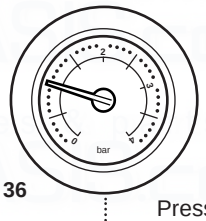

Fig. 36

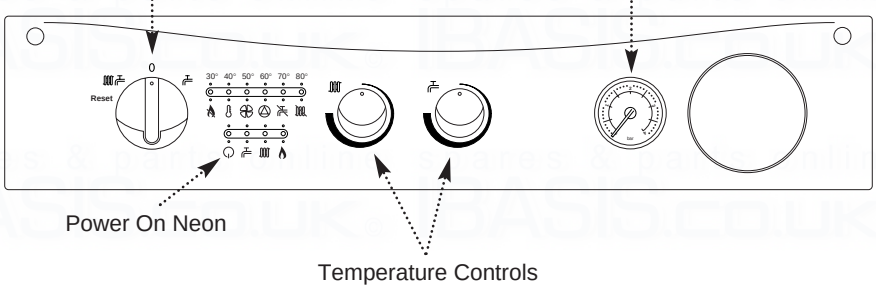

Fig. 37

10.0 COMPLETION

10.1 Completion

1. Hinge the facia panel upwards and refit the case front panel. Tighten the securing screws (Fig. 38).

2. Instruct the user in the operation of the boiler and system, explaining the operational sequence.

3. Carefully read and complete all sections of the Benchmark Commissioning Checklist at the rear of this publication that are relevant to the appliance and installation. These details will be required in the event of any warranty work. The publication must be handed to the user for safe keeping and each subsequent regular service visit recorded.

4. For IE, it is necessary to complete a “Declaration of Conformity” to indicate compliance with I.S. 813. An example of this is given in I.S. 813 “Domestic Gas Installations”. This is in addition to the Benchmark Commissioning Checklist.

5. Hand over the Users Operating, Installation and Servicing Instructions, giving advice on the necessity of regular servicing.

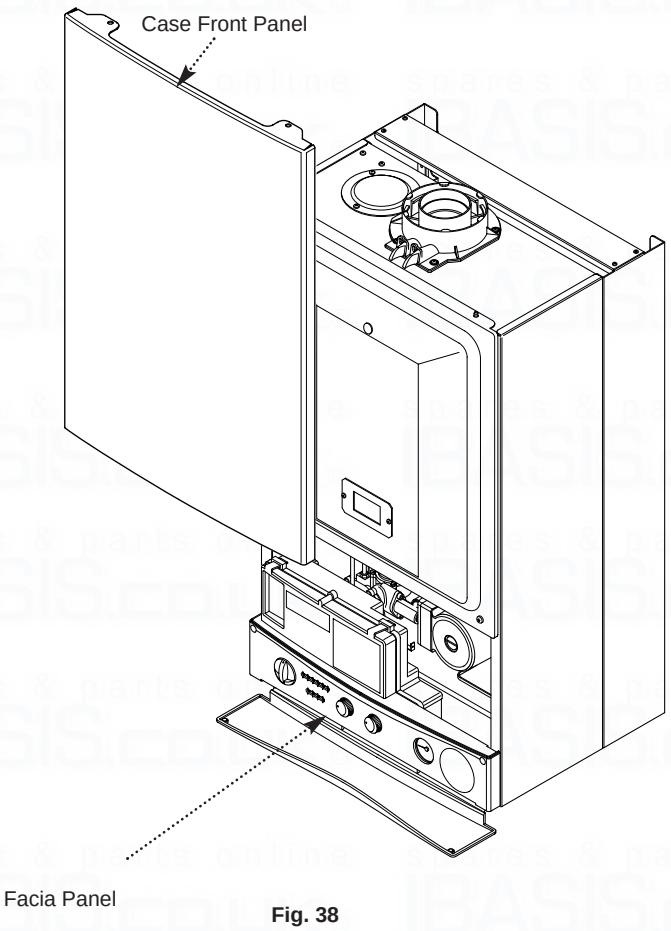

Fig. 38

11 .1 Annual Servicing

1. For reasons of safety and economy, it is recommended that the boiler is serviced annually. Servicing must be performed by a competent person.

2. After servicing, complete the relevant Service Interval Record section of the Benchmark Commissioning Checklist at the rear of this publication.

3. Ensure that the boiler is cool.

4. Ensure that both the gas and electrical supplies to the boiler are isolated.

5. Slacken the screws securing the facia panel. Lift the outercase panel so that its securing tabs are clear of the facia. Remove the panel, allowing the facia to hinge down (Fig. 39).

6. Remove the screws securing the inner door panel. Lift the panel slightly to disengage it from the studs on top of the case (Fig. 40).

7. Note the positions of the two sensing tubes on the fan spigot and three wires on the fan motor and remove them (Fig. 41).

8. Slacken the screws on the fan spigot outlet pipe clamps. Ease the clamps inwards over the pipe.

9. Draw the outlet pipe away from the boiler.

10. Remove the four screws securing the combustion box door and remove the door (Fig. 40).

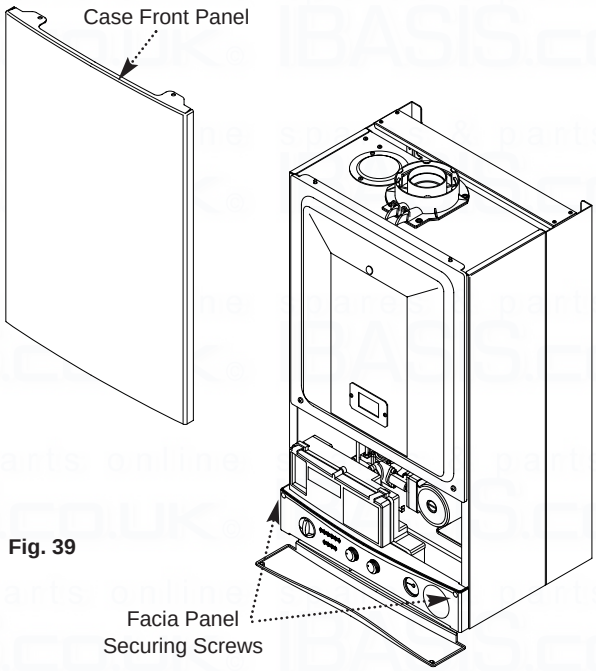

Fig. 39

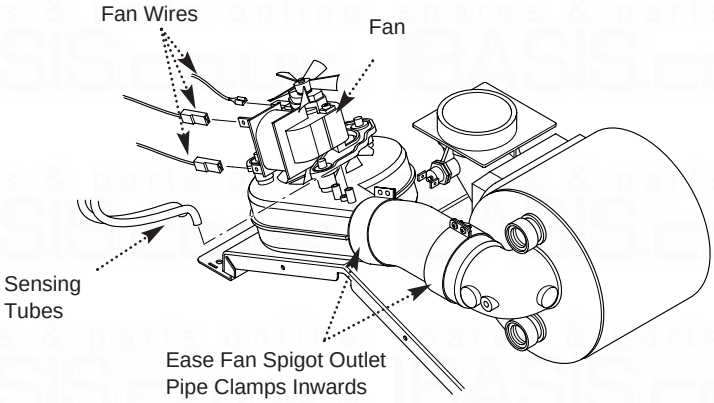

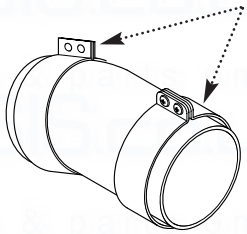

Fig. 41

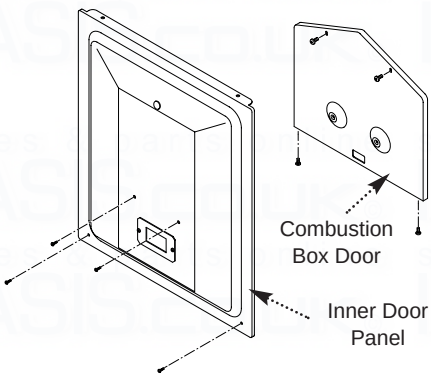

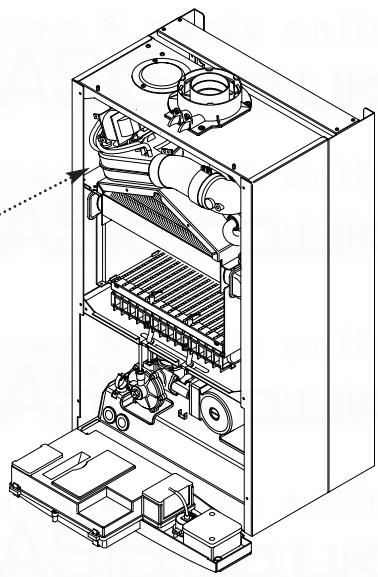

Fig. 40

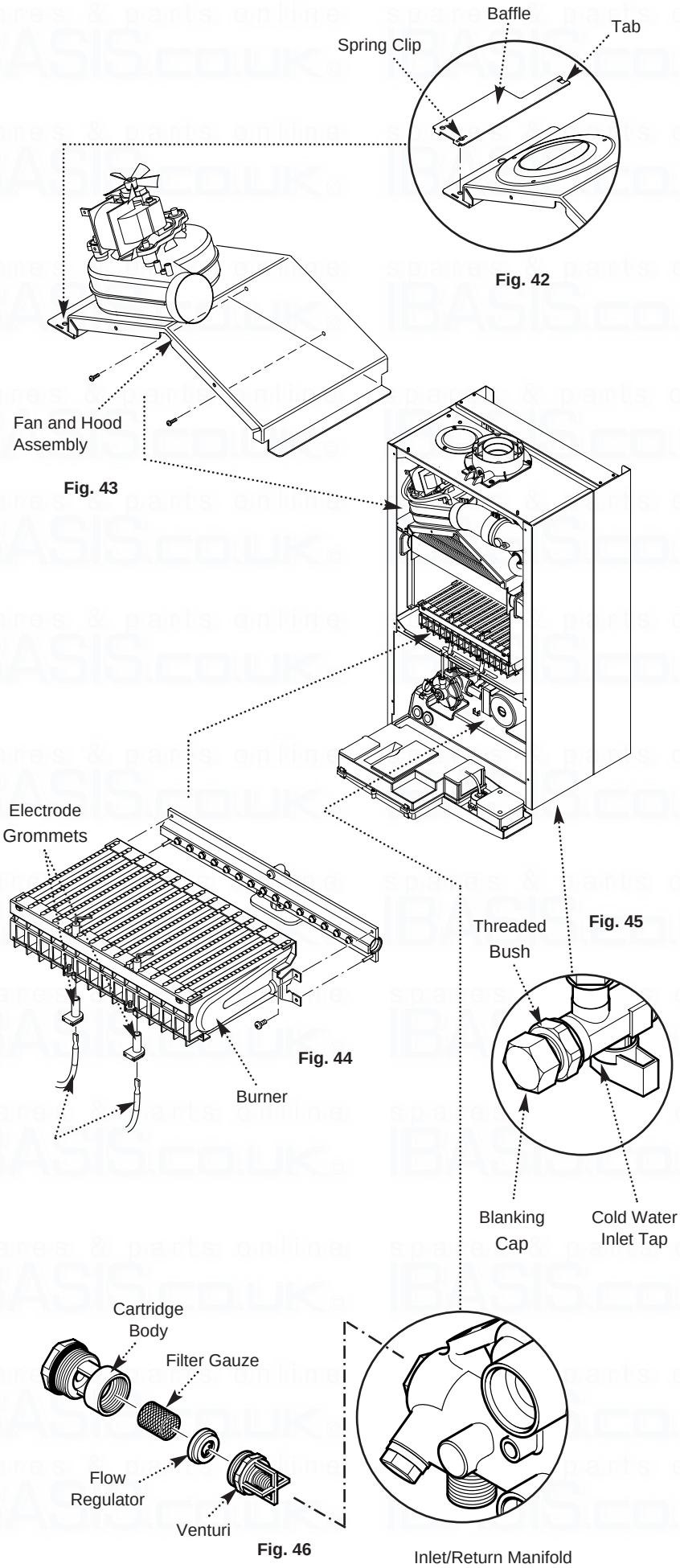

11.1 Annual Servicing (Cont)

11. Ease the front edge of the left hand baffle upwards, disengaging the spring clip. Disengage the tab on the baffle from the slot in the fan hood (Fig. 42).

12. Undo the screws securing the fan and hood to the appliance back panel. Draw the assembly forwards (Fig. 43).

13. Undo the screws securing the burner to the injector manifold. Draw the burner out of the combustion box, pulling the electrode grommets from the slots in the combustion box lower panel (Fig. 44).

14. Disconnect the electrode leads and grommets from the electrodes. Completely remove the burner (Fig. 44).

15. Brush any deposits from the injectors. Do not use a pin or wire to clean them.

16. Brush the burner blades and venturis and clean the combustion box.

17. Ensure that the heat exchanger fins are clear of any obstruction.

NOTE: If necessary the secondary heat exchanger may be dismantled - see section 12.24.

DHW Filters (Fig. 46)

18. If the flow of domestic hot water is diminished, it may be necessary to clean the filters.

19. Initially check the cold water inlet tap filter.

20. Turn the tap off. Undo the blanking cap and remove the threaded bush (Fig. 45).

21. Extract the filter and rinse thoroughly in clean water. Reassemble and check the flow. If required clean the manifold filter as described below.

22. Undo the filter cartridge from the inlet/return manifold.

23. Dismantle the cartridge and carefully remove the flow regulator and filter gauze. Rinse them thoroughly in clean water and reassemble in reverse order.

24. Check that the pressure vessel charge is 0.5bar, reassemble in reverse order of dismantling and recommission.

25. Turn the selector switch fully anticlockwise against the spring pressure to the reset position and hold for 2 seconds to reset the boiler.

26. Complete the relevant Service Interval Record section of the Benchmark Commissioning Checklist at the rear of this publication and then hand it back to the user.

12.0 CHANGING COMPONENTS

IMPORTANT: When changing components ensure that both the gas and electrical supplies to the boiler are isolated before any work is started. When the component has been changed turn the selector switch fully anticlockwise against the spring pressure to the reset position and hold for 2 seconds to reset the boiler before recommissioning.

See Section 11.1 “Annual Servicing” for removal of case panel, door etc.

12.1 Fan (Figs. 48 & 49)

1. Note the positions of the two sensing tubes on the fan spigot and three wires on the fan motor and remove them.

2. Slacken the screws on the fan spigot outlet pipe clamps. Ease the clamps inwards over the pipe.

3. Draw the outlet pipe away from the boiler.

4. Remove the four screws securing the combustion box door and remove the door.

5. Ease the front edge of the left hand baffle upwards, disengaging the spring clip. Disengage the tab on the baffle from the slot in the fan hood.

6. Undo the screws securing the fan hood to the appliance back panel, and draw the fan and hood assembly forwards.

7. Remove the screws and spring washers securing the fan to the hood.

8. Fit the new fan to the hood using the screws and spring washers previously removed.

9. Reassemble in reverse order of dismantling.

12.2 Pressure Switch (Fig. 47)

1. Remove the fan as described in section 12.1.

2. Note the positions of the two sensing tubes and three wires and remove them.

3. Remove the two screws holding the pressure switch to the bracket on the combustion box top panel.

4. Fit the new pressure switch and reassemble all components in reverse order of dismantling.

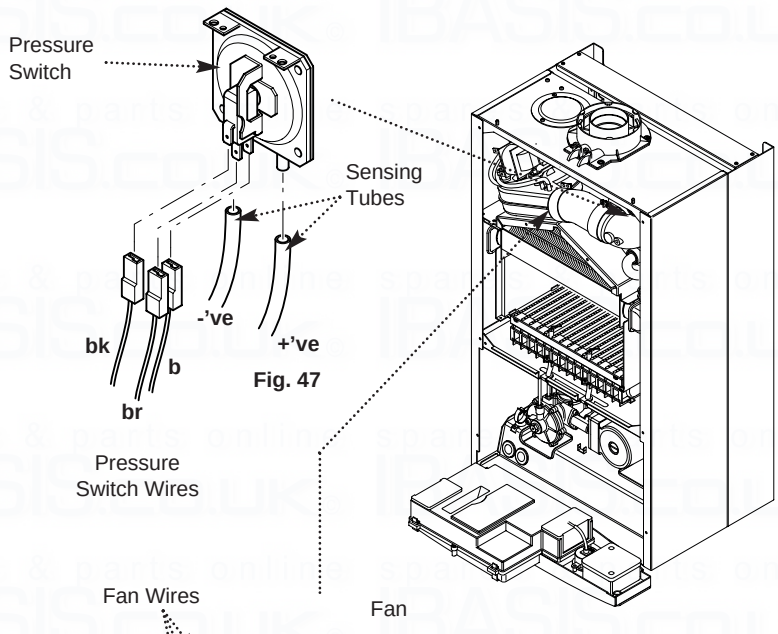

Fig. 47

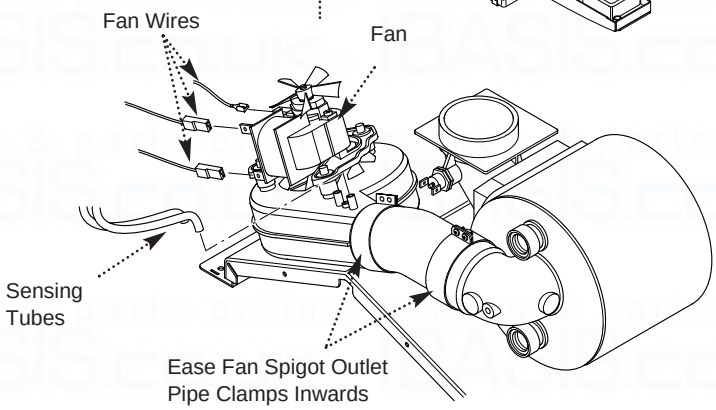

Fig. 48

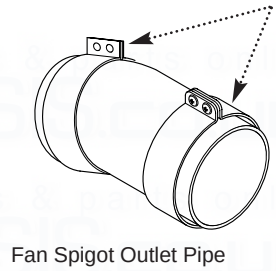

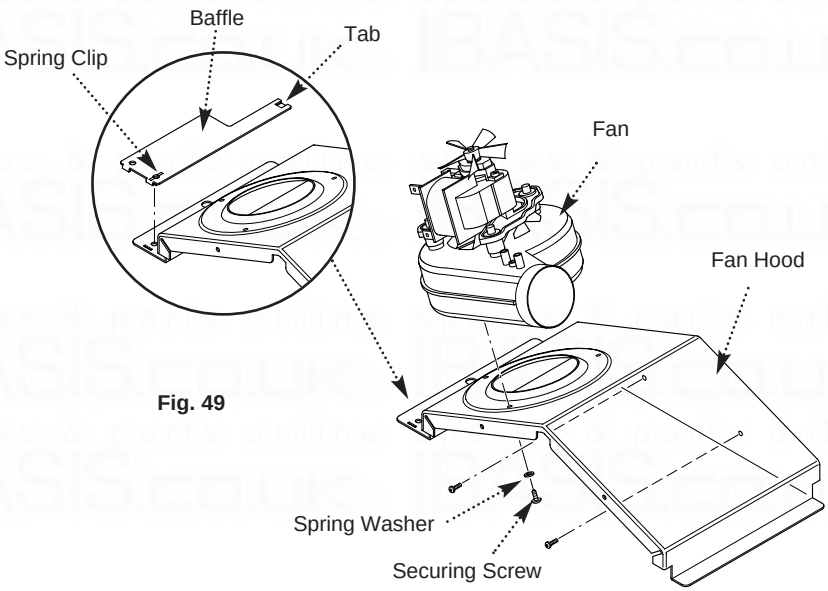

Fig. 49

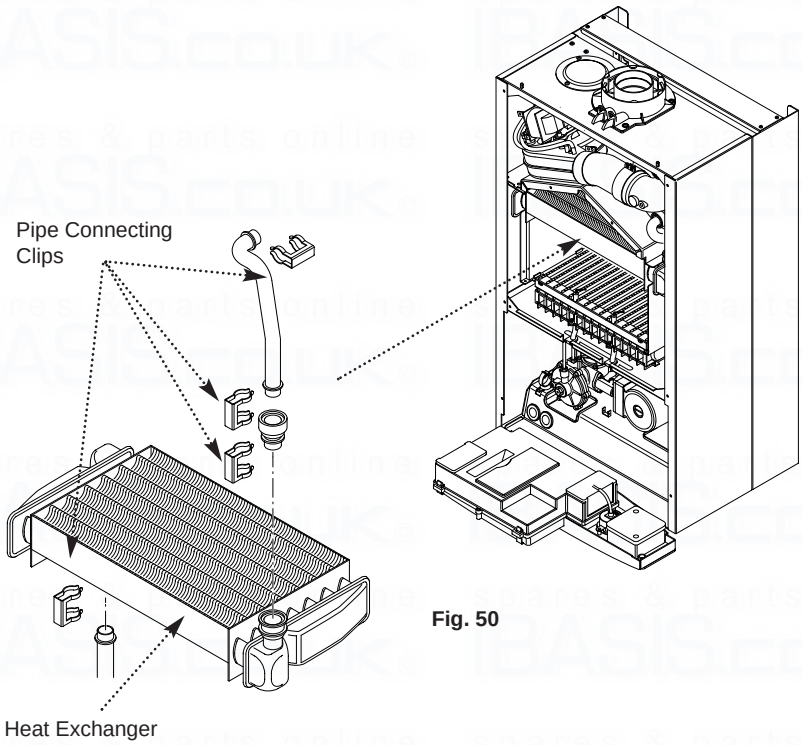

Fig. 50

12.3 Heat Exchanger (Fig. 50)

1. Remove the fan as described in section 12.1.

2. Drain the primary circuit. Prise the three pipe connecting clips off the joints in the flow and return pipes. Remove the heat exchanger return pipe.

3. Lift the heat exchanger to disconnect the flow pipe joint. Withdraw it from the appliance, taking care not to damage the rear insulation piece.

4. Fit the new heat exchanger.

5. Reassemble in reverse order of dismantling, and repressurise the system.

12.4 Burner (Fig. 51)

1. Remove the four screws securing the combustion box door and remove the door.

2. Undo the screws securing the burner to the injector manifold. Draw the burner out of the combustion box, pulling the electrode grommets from the slots in the combustion box lower panel.

3. Disconnect the electrode leads and grommets from the electrodes. Completely remove the burner.

4. Undo the screws securing the electrodes to the burner. Examine the condition of the electrodes, replacing if necessary. Fit the electrodes to the new burner.

5. Engage the burner location brackets over the studs on the injector manifold and reassemble in reverse order.

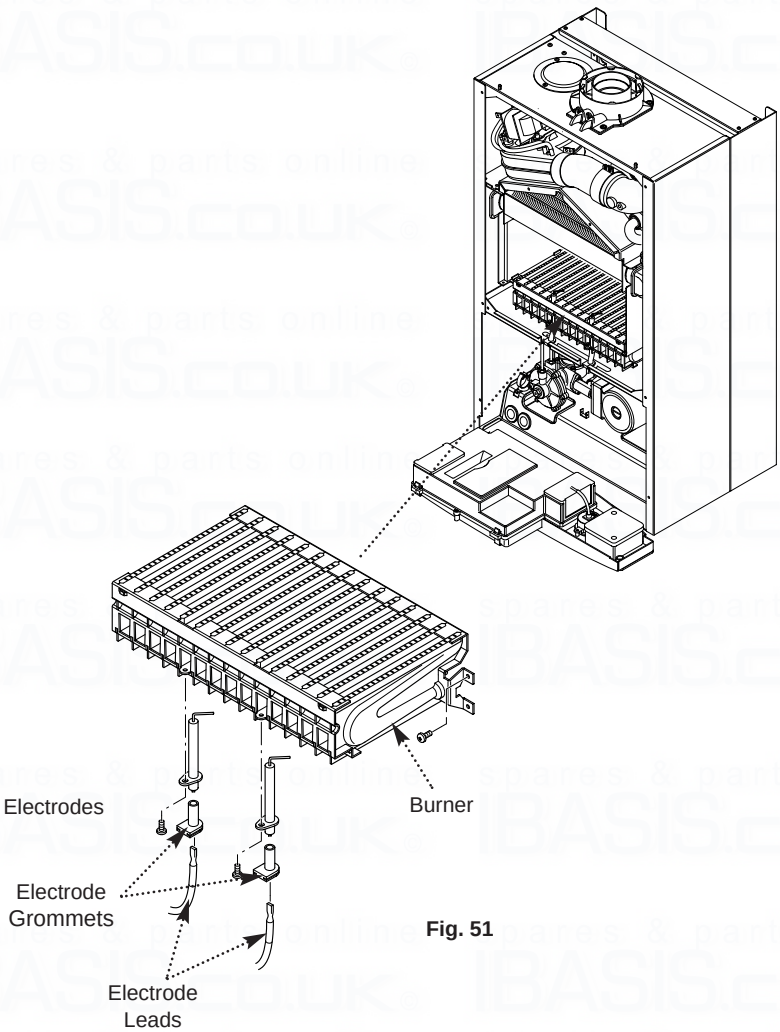

Fig. 51

12.5 Injectors (Fig. 52)

1. Remove the burner as described in Section 12.4.

2. Undo the screws securing the injector manifold to the inlet elbow and remove the manifold.

3. Unscrew and replace injectors as required and examine the sealing gasket, replacing as necessary. Reassemble in reverse order.

12.6 Electrodes (Fig. 52)

1. Remove the four screws securing the combustion box door and remove the door.

2. Undo the screws securing the burner to the injector manifold. Draw the burner out of the combustion box, pulling the electrode grommets from the slots in the combustion box lower panel.

3. Disconnect the lead and grommet from the electrode being replaced. Undo the securing screw and withdraw the electrode to the burner.

4. Reassemble in reverse order.

12.7 Insulation (Fig. 53)

1. Remove the four screws securing the combustion box door and remove the door.

2. Slide the side insulation pieces carefully out of their carriers.

3. To replace the rear insulation piece it is necessary to remove the heat exchanger as described in Section 12.3 and slide out the side pieces.

4. The combustion box door insulation piece can be replaced by carefully bending up the two retaining tabs.

5. Replace all insulation pieces and reassemble in reverse order.

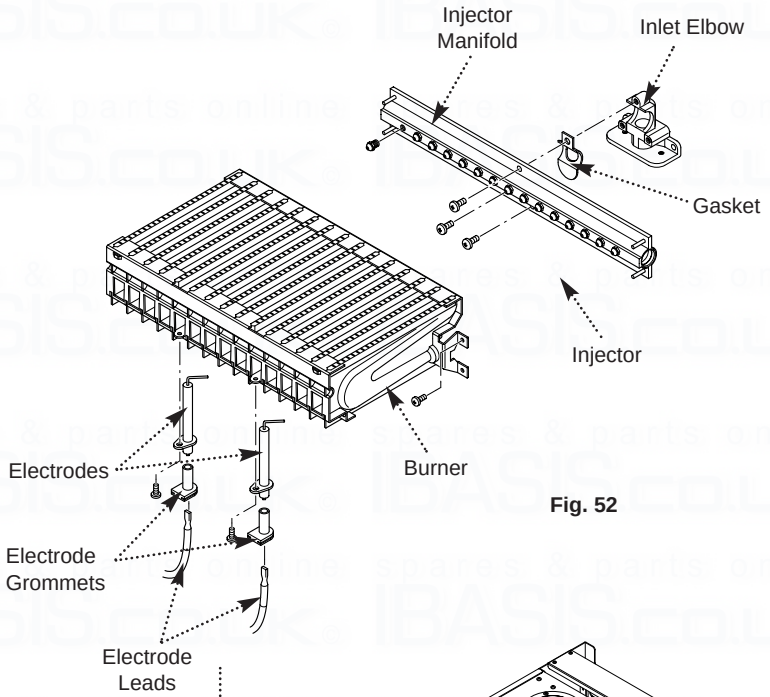

Fig. 52

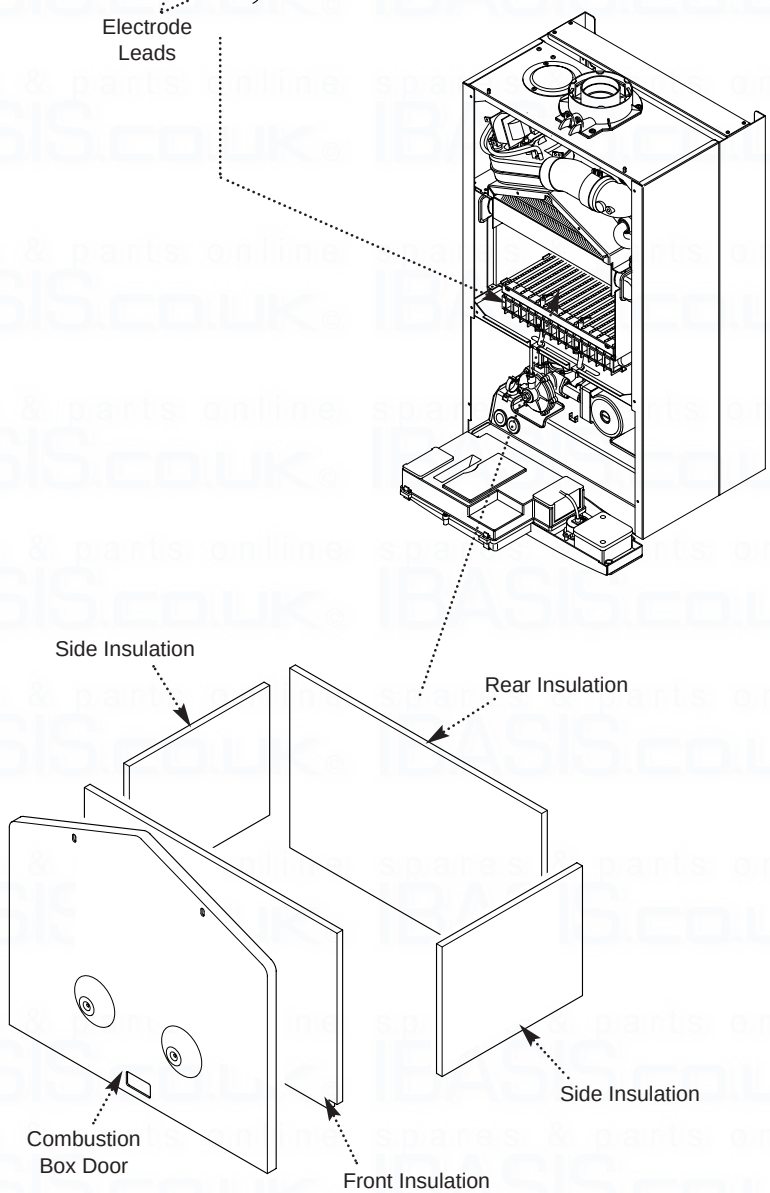

Fig. 53

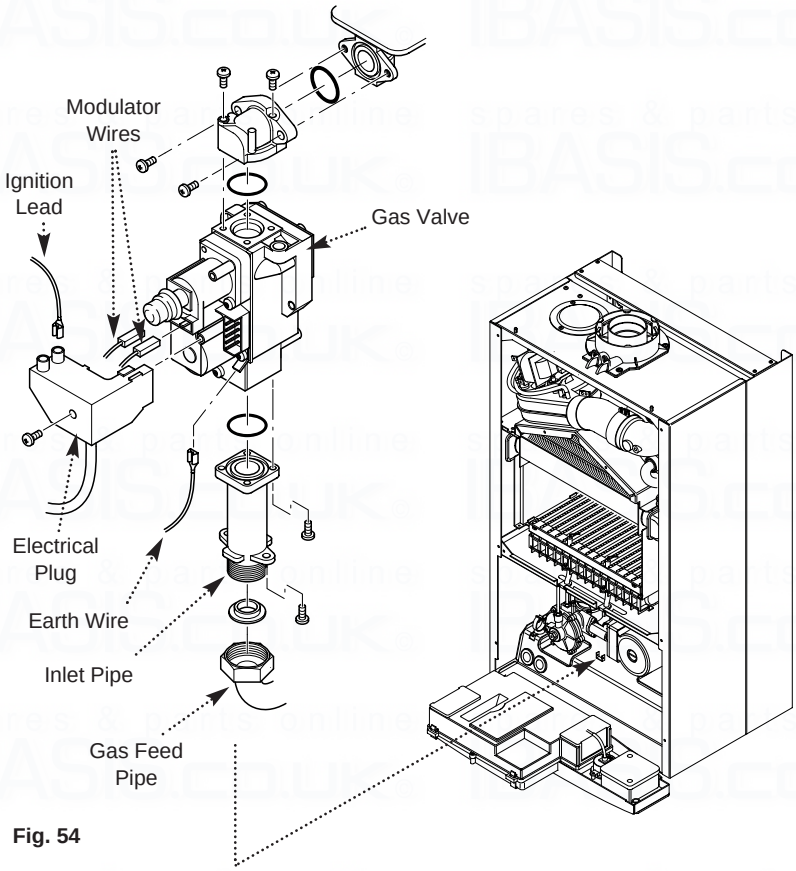

Fig. 54

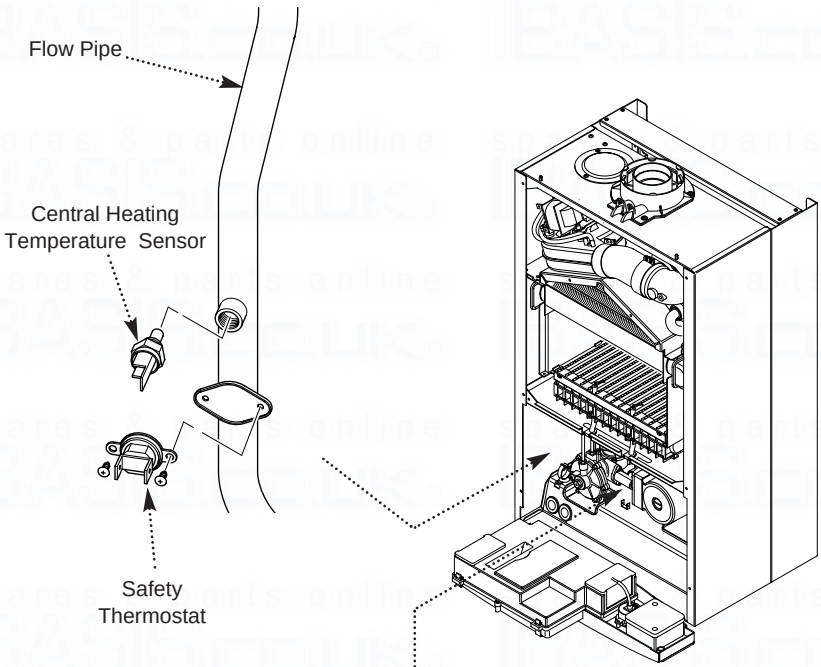

Fig. 55

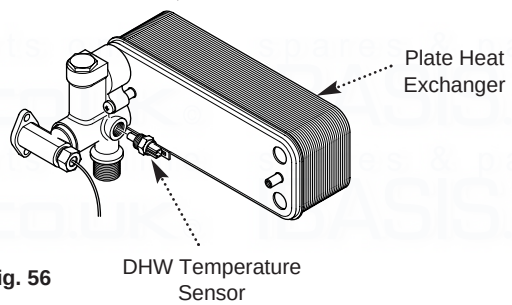

Fig. 56

12.8 Gas Valve (Fig. 54)

1. Undo the nut on the gas feed pipe under the boiler.

2. Completely undo the securing screws and hinge the facia panel down.

3. Disconnect the wires from the valve modulator and the ignition lead from the spark generator. Disconnect the pressure sensing pipe from the valve. Undo the screw securing the spark generator electrical plug to the valve and disconnect the plug.

4. Pull the earth wire off the spade terminal on the valve.

5. Remove the screws securing the inlet pipe flange to the boiler bottom panel and those securing the outlet manifold to the burner manifold.

6. Remove the valve from the boiler.

7. Note the orientation of the inlet pipe and outlet manifold. Undo the securing screws and remove the pipe and manifold.

8. Examine the ‘O’ ring seals for damage, replacing as necessary.

9. Fit the inlet pipe and outlet manifold to the new valve, ensuring that the ‘O’ ring seals are in place.

10. Reassemble in reverse order and check the burner pressure (Section 9.2).

12.9 Central Heating Temperature Sensor (Fig. 55)

1. Ease the retaining tab on the sensor away and disconnect the electrical plug.

2. Unscrew the sensor from it’s pocket and reassemble in reverse order. The plug will only fit one way.

12.10 Safety Thermostat (Fig. 55)

1. Pull the electrical connections off the thermostat.

2. Remove the screws securing the thermostat to the mounting plate on the flow pipe.

3. Reassemble in reverse order. The thermostat is not polarised - either wire can fit either terminal on the thermostat.

12.11 DHW Temperature Sensor (Fig. 56)

1. Turn off the mains water supply and draw off the residual domestic hot water.

2. Ease the retaining tab on the sensor away and disconnect the electrical plug.

3. Unscrew the sensor from the plate heat exchanger manifold. Examine the sealing washer,replacing if necessary.

4. Reassemble in reverse order. The plug will only fit one way.

12.12 Pump - Head Only (Fig. 57)

1. Drain the primary circuit and remove the socket head screws securing the pump head to the body and draw the head away.

2. Undo the screw on the pump wiring cover and remove the cover. Using a suitable flat bladed screw driver press the cable securing levers downwards to release each wire after noting their position.

3. A standard replacement Grundfos 15-60 head can now be fitted. Connect the pump wiring to the new head. **The pump speed must be set to 3** (Fig. 58).

4. Reassemble in reverse order.

12.13 Pump - Complete (Fig. 59)

1. Drain the primary circuit and unscrew the automatic air vent from the pump body. Undo the two screws securing the body to the pipe and manifold and draw the pump forwards.

2. Undo the screw on the pump wiring cover and remove the cover. Using a suitable flat bladed screw driver press the cable securing levers downwards to release each wire after noting their position.

3. Connect the wiring to the new pump. Examine the 'O' ring seals on the return pipe and manifold, replacing if necessary.

4. Fit the air vent to the pump body and reassemble in reverse order.

12.14 Automatic Air Vent (Fig. 59)

1. Drain the primary circuit and unscrew the automatic air vent from the pump body.

2. Examine the 'O' ring seal, replacing if necessary, and fit it to the new automatic air vent.

3. Reassemble in reverse order.

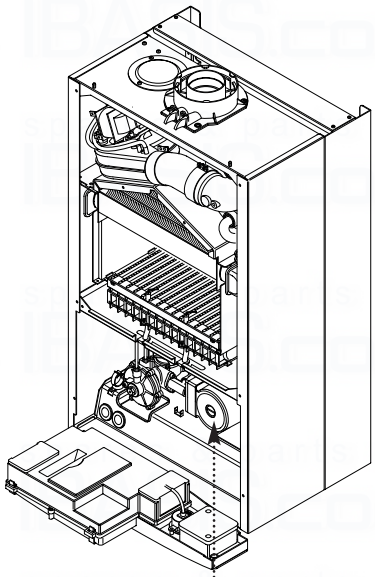

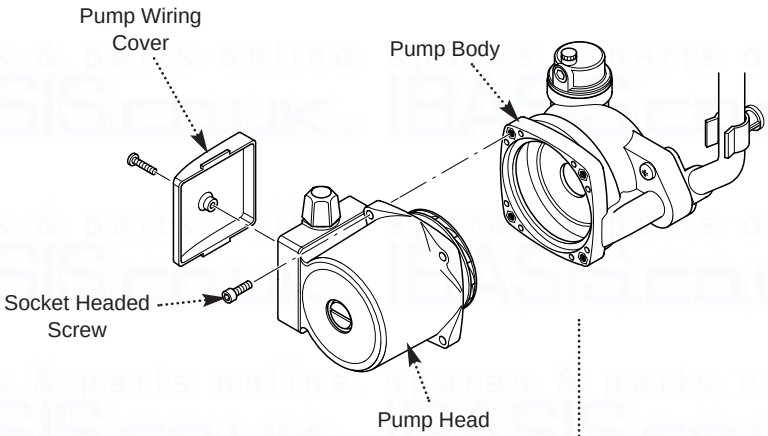

Fig. 57

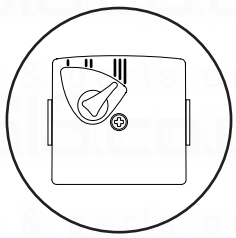

Fig. 58

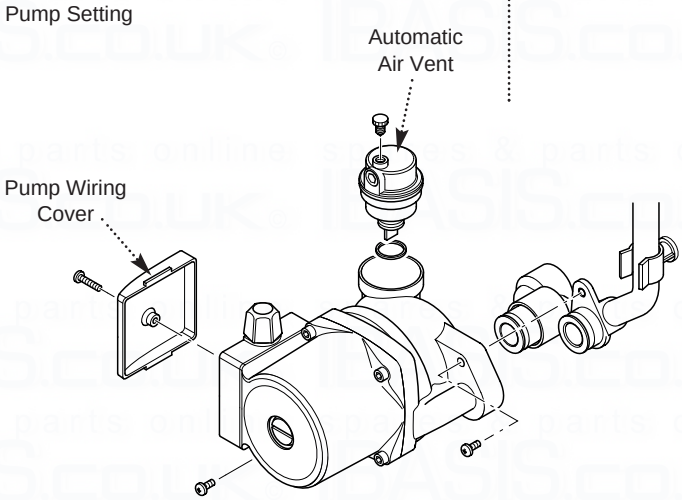

Fig. 59

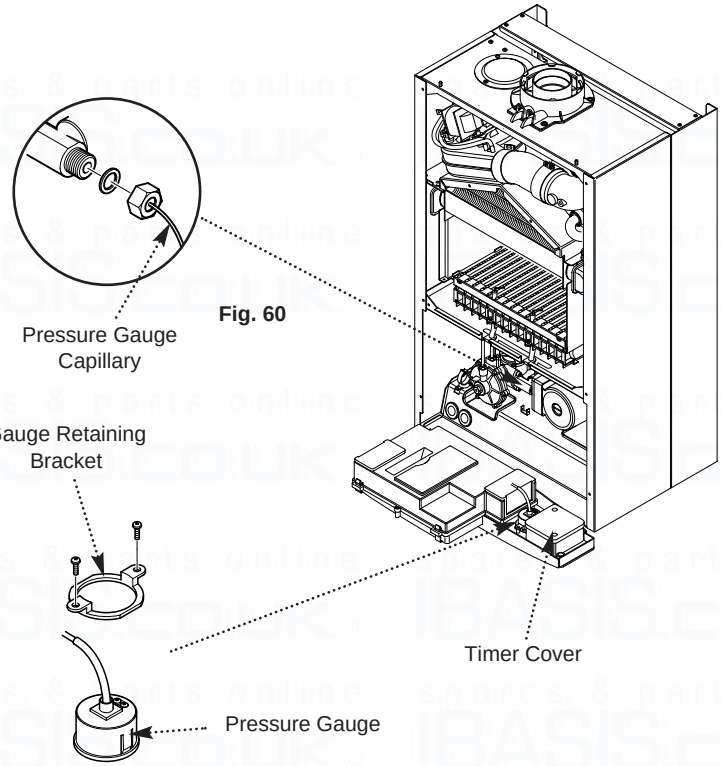

Fig. 60

Fig. 61

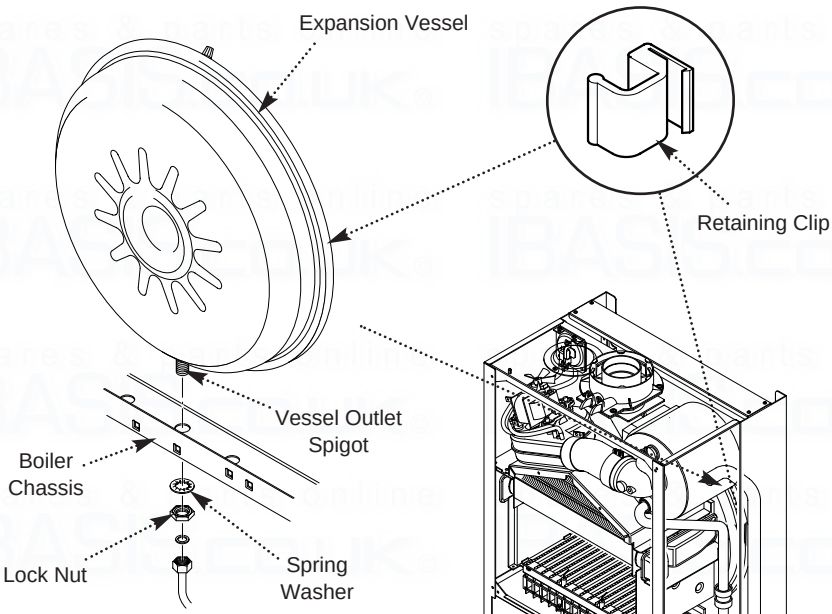

Fig. 62

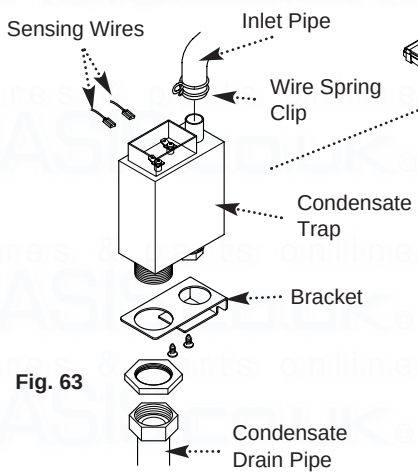

Fig. 63

12.0 CHANGING COMPONENTS

12.15 Pressure Gauge (Figs. 60 & 61)

1. Drain the primary circuit and undo the nut on the pressure gauge capillary.

2. Remove the timer cover and ease the timer wiring aside. Undo the screws securing the gauge retaining bracket.

3. Remove the bracket and gauge assembly. Depress the barbs on the side of the gauge and remove the retaining bracket.

4. Reassemble in reverse order.

12.16 Expansion Vessel (Fig. 62)

1. To replace the expansion vessel it is necessary to remove the boiler from the wall.

Note: Alternatively a vessel of equivalent capacity can be fitted on the system return pipe as close as possible to the boiler.

2. Drain the system and undo all gas, water and condensate drain connections. Remove the flue elbow.

3. Lift the boiler off the wall plate and lay it on it's side on a clean flat surface.

4. Undo the nut on the vessel outlet spigot, and remove the locknut and spring washer securing the spigot to the boiler chassis.

5. Undo the screws and remove the appliance upper cross member. Slide the expansion vessel out of the retaining clips.

6. Reassemble in reverse order. Fully recommission the appliance and system.

12.17 Condensate Trap (Fig. 63)

1. Disconnect the two sensing wires from the trap connections.

2. Squeeze together the wire spring clip to release and ease the inlet pipe from the trap spigot.

3. Undo the nut securing the condensate drain pipe to the trap. Disconnect the pipe and sealing washer.

4. From underneath the boiler remove the screws securing the trap bracket.

5. Remove the trap and bracket from the boiler. Undo the locknut securing the trap to the bracket.

6. Reassemble in reverse order.

12.18 Pressure Relief Valve (Fig. 64)

1. Drain the primary circuit.

2. Disconnect the discharge pipe from the valve. Using a suitable hexagon key undo the grub screw sufficiently to release the valve.

3. Note the orientation of the valve, rotate it and withdraw it from the manifold.

4. Fit the new valve and 'O' ring seal and set to the previously noted orientation. Reassemble in reverse order.

12.19 P.C.B. (Fig. 66)

1. Note the settings of the temperature control knobs, rotate them fully anticlockwise and carefully pull them off the drive pins.

2. Completely undo the screws securing the control box cover and release the cover retaining barbs from their slots. Disengage the rear of the cover from the control box hinge pin (Fig. 65).

3. Note the position of all plugs and wires on the P.C.B. and disconnect them.

4. Undo the securing screws and remove the P.C.B. Transfer the control knob drive pins to the new P.C.B. and turn them fully anticlockwise.

5. Reassemble in reverse order, ensuring that the temperature controllers are reset to their previous positions.

12.20 Selector Switch (Fig. 66)

1. Note the setting of the selector switch knob and carefully pull it off the facia.

2. Completely undo the screws securing the control box cover and release the cover retaining barbs from their slots. Disengage the rear of the cover from the control box hinge pin (Fig. 65).

3. Note the position of the electrical connections and the orientation of the switch. Remove the electrical connections.

4. Remove the screws securing the switch to the facia panel.

5. Fit the new switch, ensuring that it is correctly positioned and reassemble in reverse order.

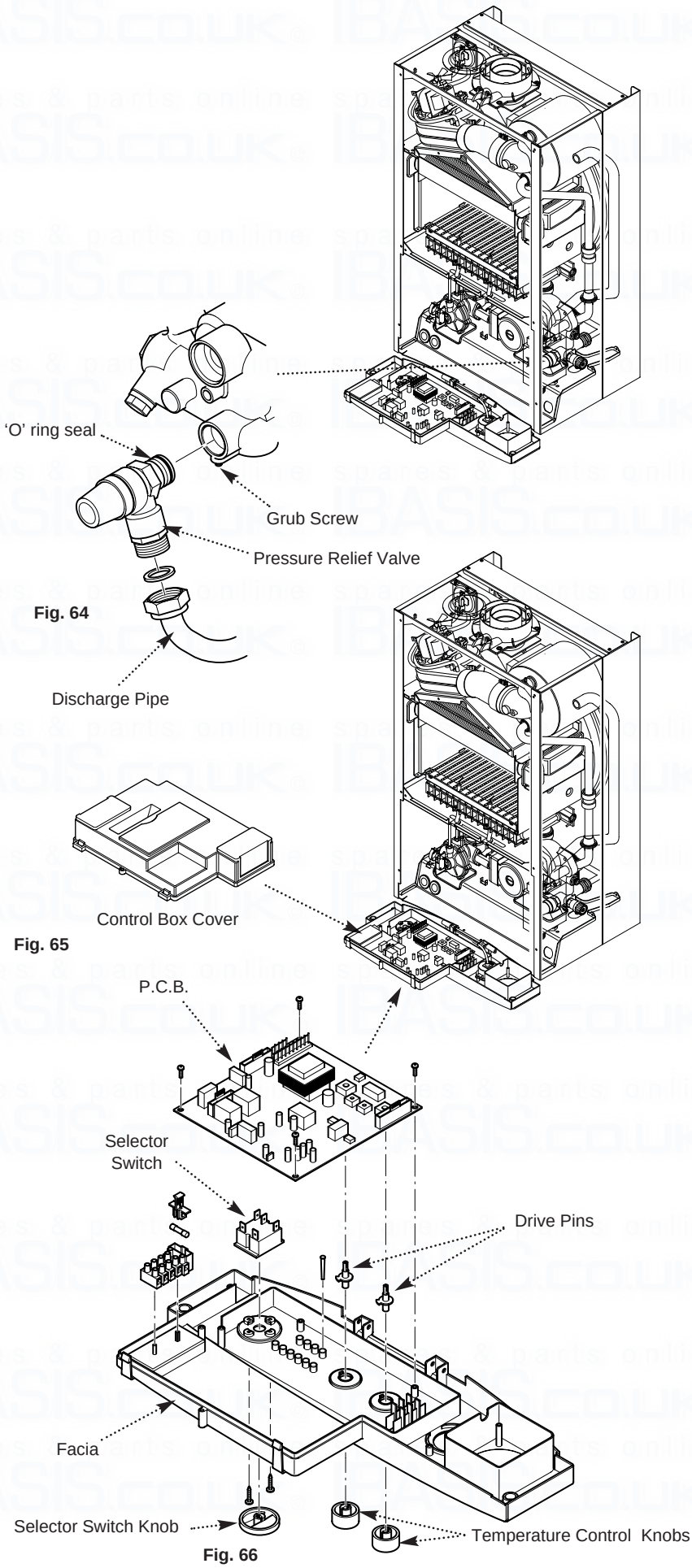

Fig. 64

Fig. 65

Fig. 66

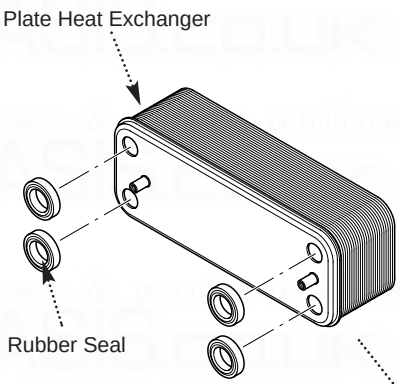

Fig. 67

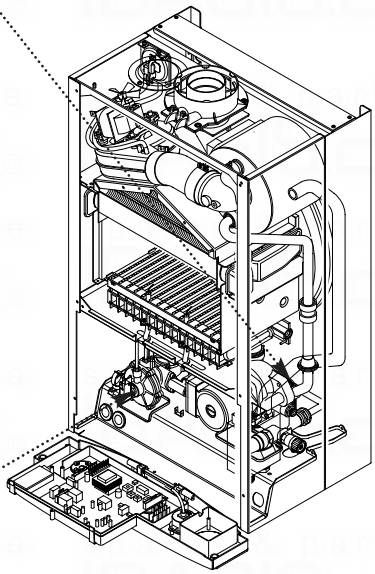

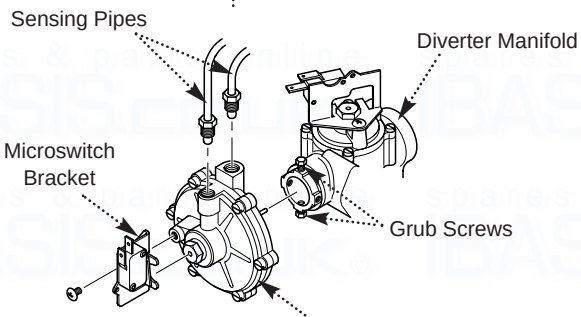

Fig. 68

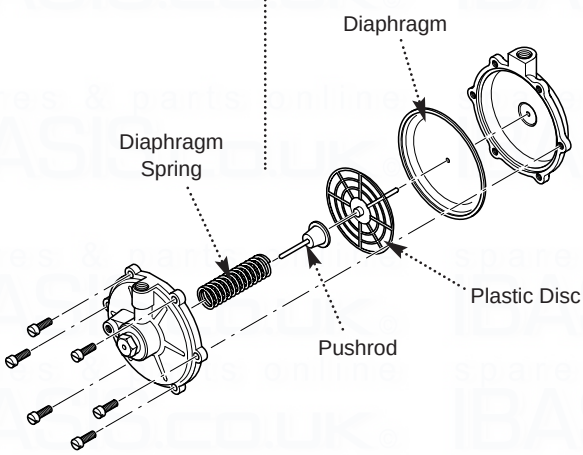

Fig. 69

12.21 Plate Heat Exchanger (Fig. 67)

1. Drain the primary circuit.

2. While supporting the heat exchanger undo the screws securing it to the brass manifolds.

3. Withdraw the heat exchanger upwards and to the left of the gas valve, taking care not to damage any wires or controls.

Seals

4. There are four rubber seals between the manifolds and heat exchanger which may need replacement.

5. Ease the seals out of the manifold. Replace carefully, ensuring that when the seal is inserted into the manifold it is parallel and pushed fully in.

6. When fitting the new heat exchanger note that the left hand location stud is offset towards the centre more than the right hand one.

7. Reassemble in reverse order.

12.22 Diverter Valve Assembly (Figs. 68 & 69)

The diverter valve assembly comprises of a central heating pressure differential valve and a domestic hot water pressure differential valve. These are connected to a manifold which is joined to the plate heat exchanger.

DHW Pressure Differential Valve (Fig. 66)

1. Drain the primary circuit.

2. Undo the screw securing the microswitch bracket to the valve (Fig. 68).

3. Disconnect the two sensing pipes and slacken the grub screws securing the valve to the diverter manifold.

4. Draw the valve away from the diverter manifold. The valve may now be replaced or split to examine the diaphragm.

5. To examine the diaphragm hold the valve body securely and carefully remove the six screws. The diaphragm spring will force apart the two halves of the valve.

6. Remove the plastic disc and pushrod assembly. Carefully examine the diaphragm and replace it if there is any damage.

7. Reassemble in reverse order.

12.22 Diverter Valve Assembly (Cont)

Pressure Differential Valve (Fig. 70)

1. Remove the pressure differential valve as described above.

2. From the brass diverter manifold undo the nut on the heating flow pipe. Remove the screw securing the diverter manifold to the appliance lower bracket.

3. Disconnect the pressure gauge capillary from the diverter manifold and remove the two wires from the microswitch.

4. Prise off the spring clip securing the by-pass pipe to the diverter manifold and disconnect the sensing pipe.

5. Ease the diverter manifold out of the plate heat exchanger manifold. Remove the assembly from the appliance.

6. Undo the screw securing the microswitch bracket to the valve body. The sensor may now be dismantled to examine the diaphragm.

7. To examine the diaphragm hold the assembly securely and carefully remove the four screws. The diaphragm spring will force the two halves of the valve apart.

8. Carefully examine the diaphragm and replace it if there is any damage.

9. Reassemble in reverse order.

CH Pressure Microswitch (Fig. 70)

1. Remove the two wires from the Pressure microswitch.

2. Undo the screw securing the microswitch bracket to the valve body.

3. Reassemble in reverse order.

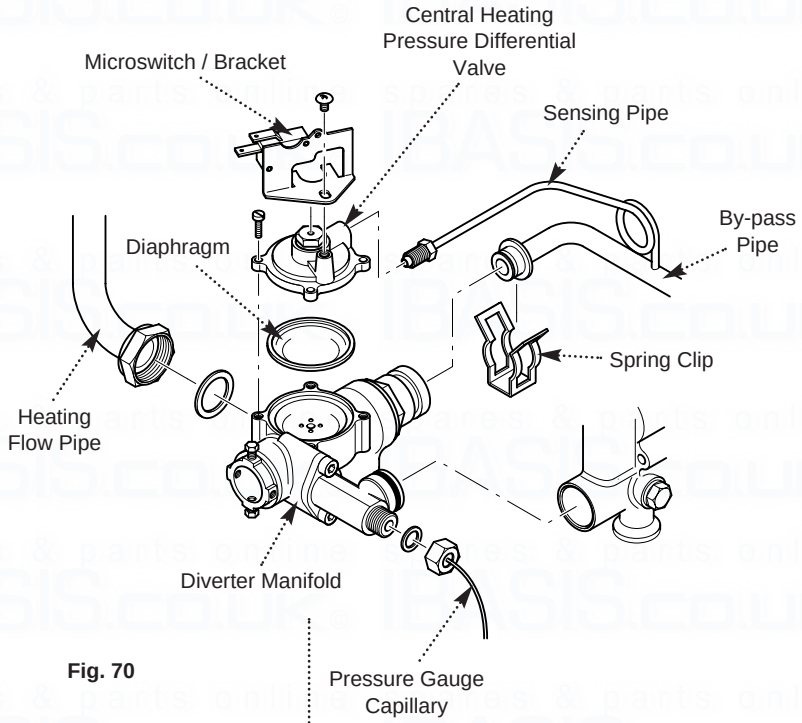

Fig. 70

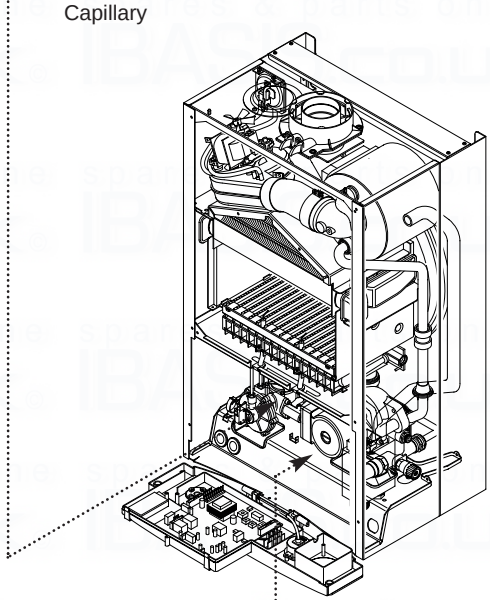

12.23 Flow Regulator (Figs. 71 & 72)

1. Undo the filter cartridge from the inlet/return manifold.

2. Unscrew the venturi and remove the flow regulator.

3. Check the cleanliness of the filter gauze, rinsing thoroughly in clean water as necessary. Fit the new flow regulator and reassemble in reverse order.

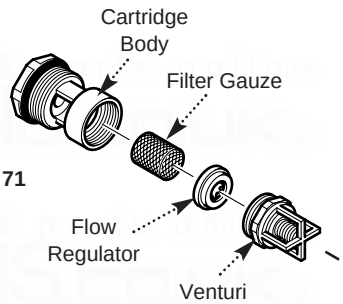

Fig. 71

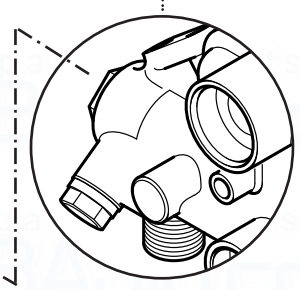

Fig. 72

Inlet/Return Manifold

12.24 Secondary Heat Exchanger) (Fig. 73)

1. Drain the primary circuit

2. Undo the four screws securing the right hand case panel. Remove the panel.

3. Prise the connecting clips from the heat exchanger return pipe and the boiler return pipe. Remove the pipes.

4. Slacken the screws on the left hand fan spigot outlet pipe clamp. Ease the clamp to the right.

5. Remove the nut securing the elbow to the secondary heat exchanger. Draw the elbow and outlet pipe forwards.

6. Remove the secondary heat exchanger from the outer drum by easing it forward.

7. Reassemble in reverse order of dismantling.

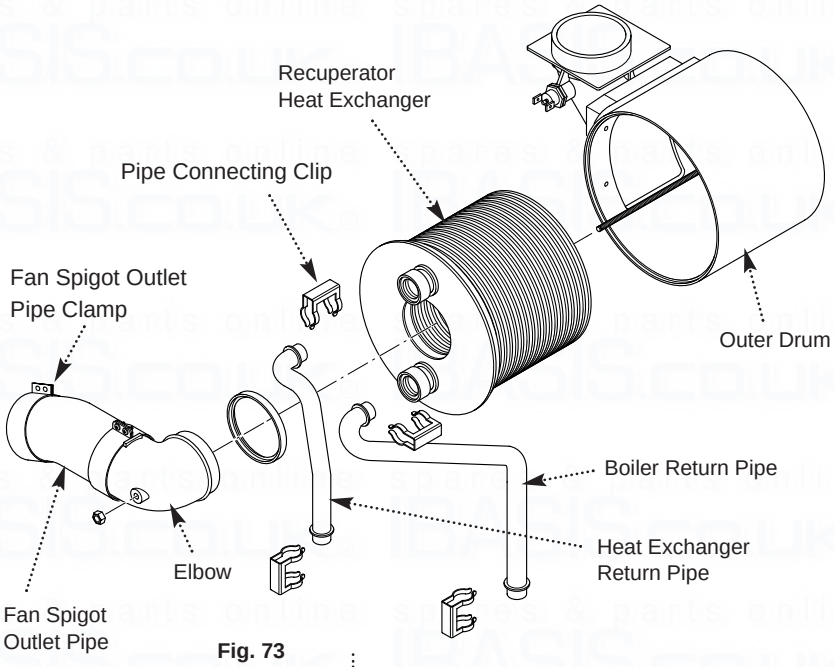

Fig. 73

12.25 Flue Overheat Thermostat (Fig. 74)

NOTE: The flue overheat thermostat includes a reset button. Check that the thermostat will not reset before replacing.

1. Remove the fan spigot outlet pipe from the fan and elbow.

2. Pull the two wires off the terminals on the flue overheat thermostat. Unscrew the thermostat from the adaptor in the outlet elbow.

3. Reassemble in reverse order of dismantling.

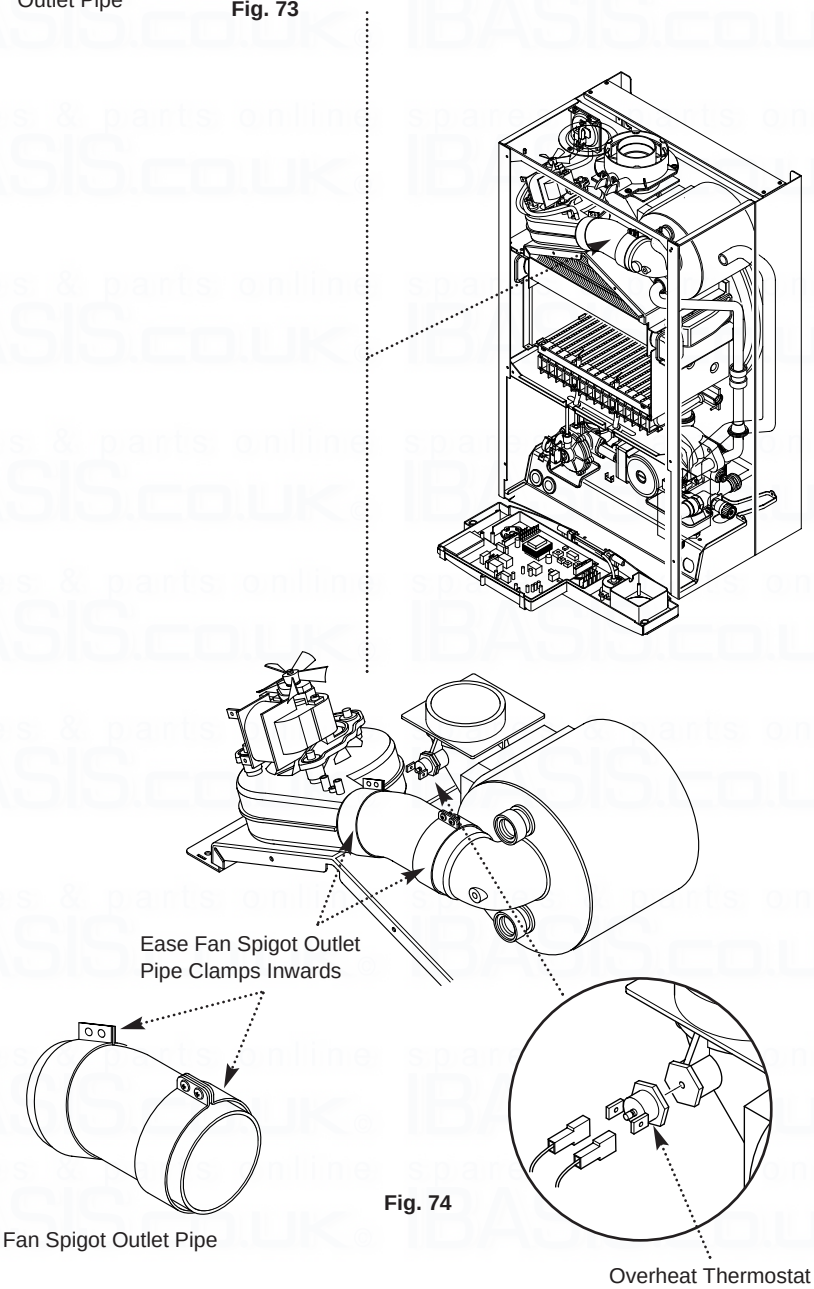

Fig. 74

13.1 Illustrated Wiring Diagram

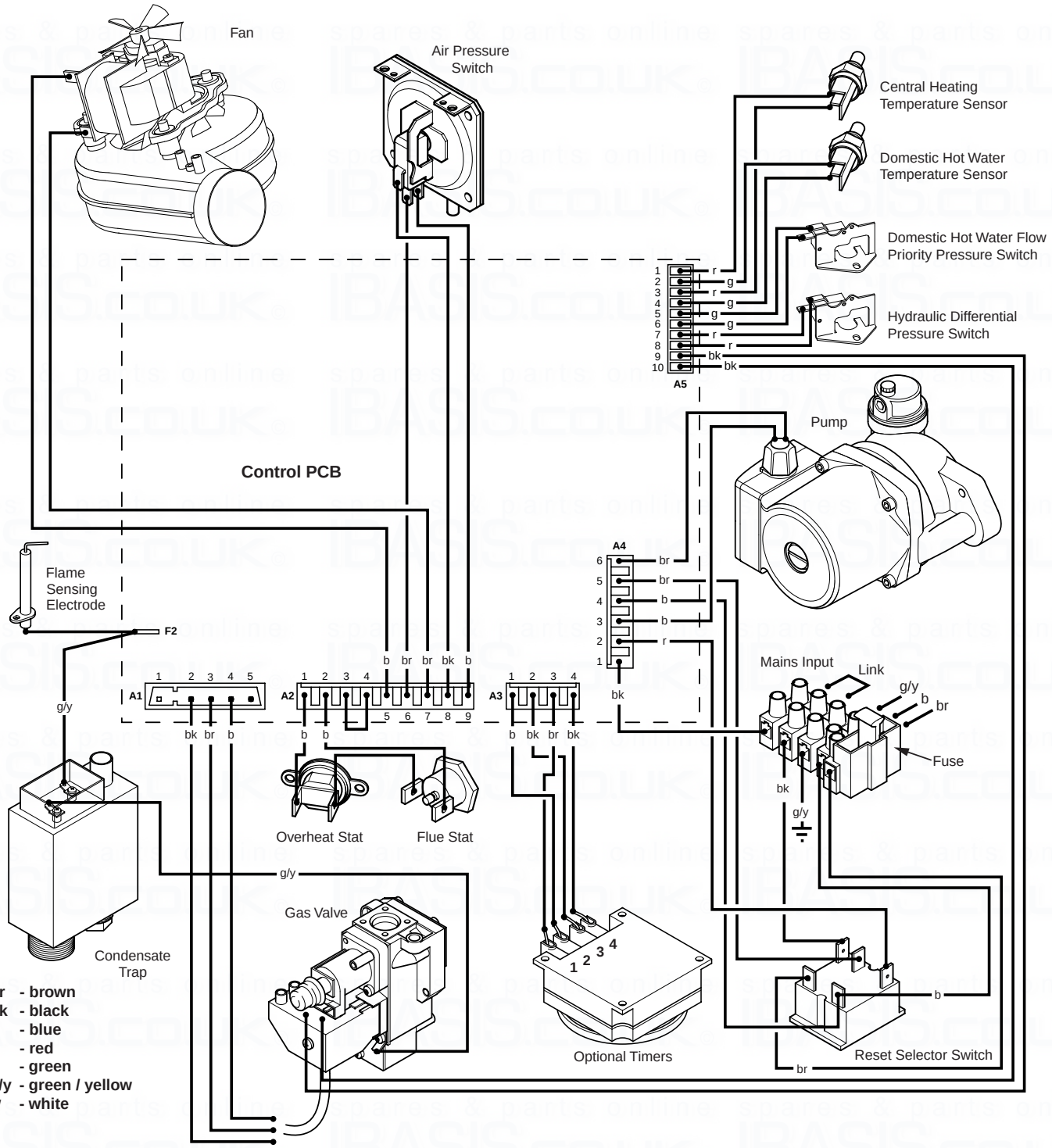

14.0 SHORT PARTS LIST

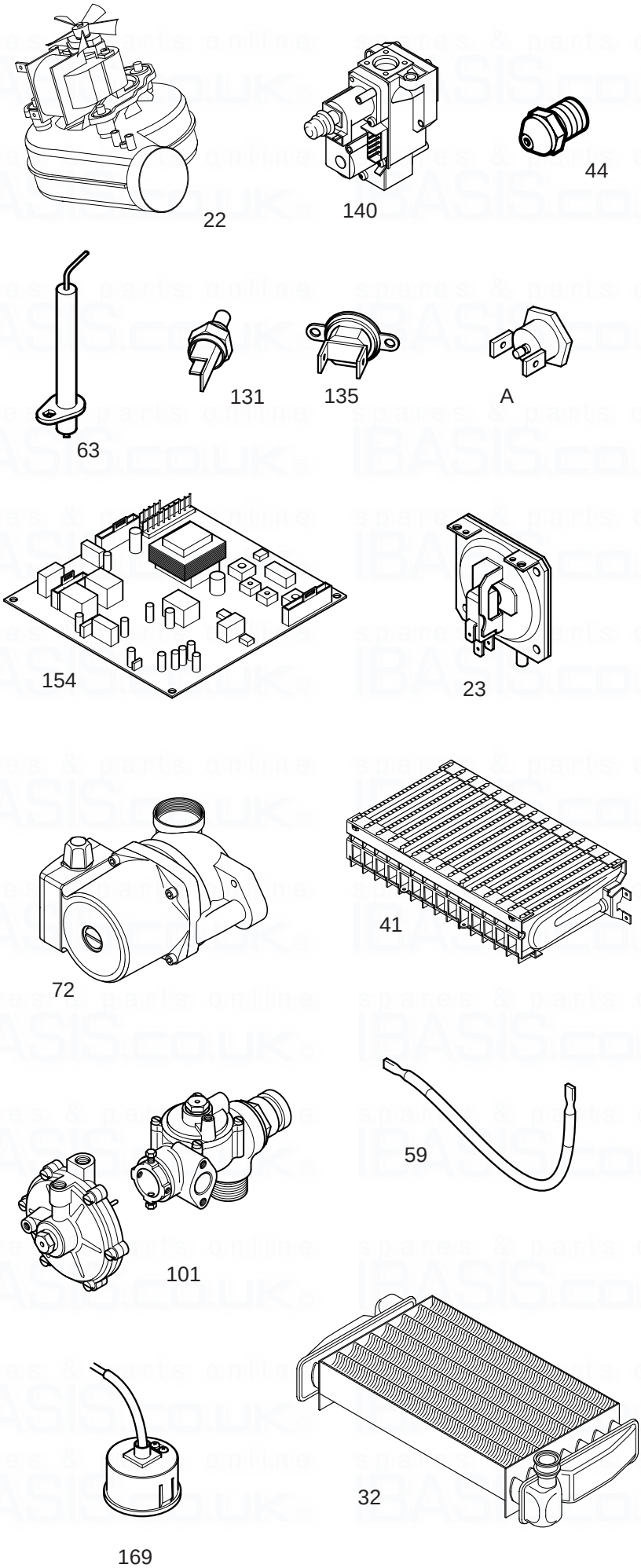

Short Parts List

Key No.	G.C. No.	Description	Manufacturers Part No.
22		Fan	5112430
23		Pressure Switch	248466
32		Heat Exchanger	5112431
41		Burner	5112770
44		Injector	5112376
59	E66 408	Electrode Lead	248037
63	E66 411	Spark or Sensing Electrode	247384
72	E66 539	Pump (complete)	248042
101	E66 432	3-Way Valve Assy.	248061
131	342 571	Temperature Sensor	247394
135	E66 439	Safety Thermostat	248079
140		Gas Valve	5107339
154		PCB	5112380
169	E66 453	Pressure Gauge	248090
371		Igniter/Gas Valve Cable	5112385
A		Flue Overheat Thermostat	5112395

spares & parts online IBASIS.CO.UK

14.0 FAULT FINDING

Carry out initial fault finding checks

1. Check that gas, water and electrical supplies are available at the boiler. Electrical supply = 230V ~ 50 Hz. CH water system pressurised to 0.5 bar when the boiler is cold. The preferred minimum gas pressure is 19.5mbar (natural gas), or 36mbar (propane).
2. Carry out electrical system checks, i.e. Ground Continuity, Resistance to Ground, Short Circuit and Polarity with a suitable meter. **NOTE:** These checks must be repeated after any servicing or fault finding.
3. Ensure all external controls are calling for heat and check all external and internal fuses. Before any servicing or replacement of parts ensure the gas and electrical supplies are isolated.

Refer to Section 13.1 "Illustrated Wiring Diagram" for position of numbered terminals

Central Heating - Follow operational sequence

NOTE: When instructed to turn the selector to the reset position turn the selector switch fully anticlockwise against the spring pressure to the reset position and hold for 2 seconds to reset the boiler.

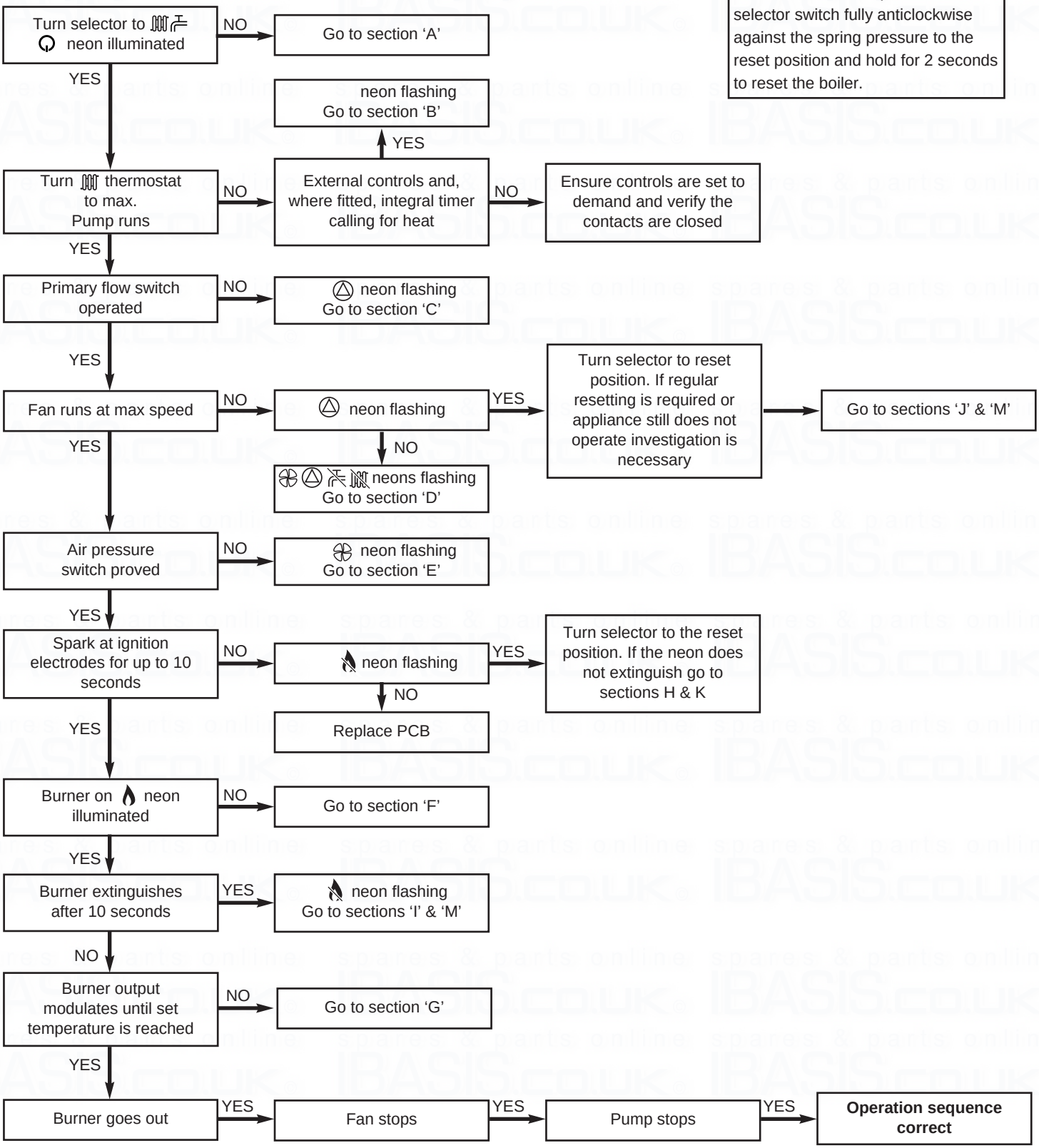

Domestic Hot Water - Follow operational sequence

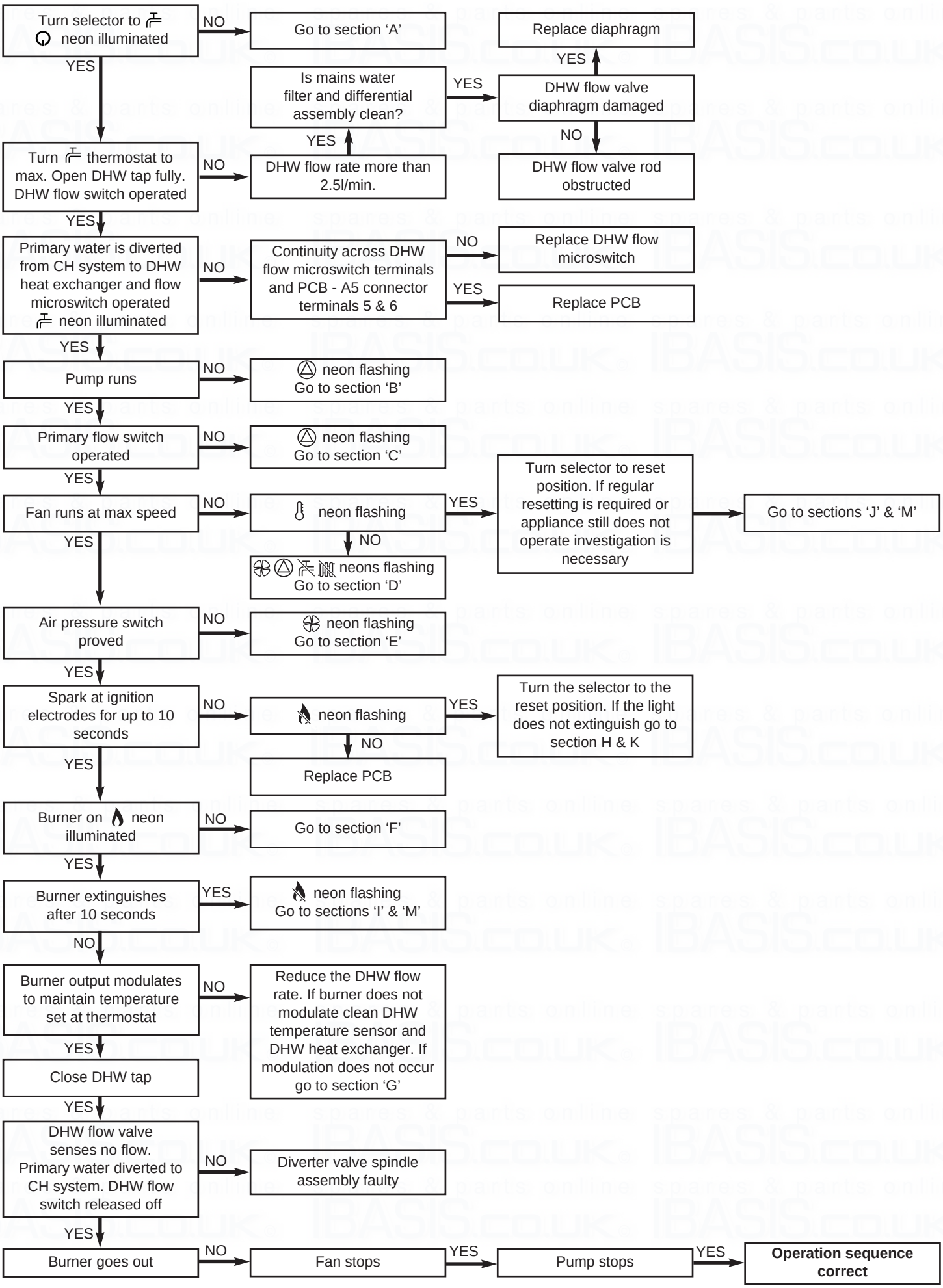

Fault Finding Solutions Sections A to E

A

Is there 230V at:

1. Main terminals L and N — NO → Check electrical supply
2. Main terminal fuse — YES → Replace fuse
3. Selector terminals a & b and a & 3. PCB - A4 connector terminals 4 & 5 — NO → Check wiring Replace selector

→ neon illuminated — NO → Replace PCB

B

Is there 230V at:

1. Pump — NO → If pump jammed, release → Replace pump
2. PCB - A4 connector terminals 3 & 6 — NO → Replace PCB
   - YES → Change pump supply cable

C

1. CH system pressure 0.5 to 1.5 bar — NO → Re-pressurise system
2. Check the tap of the automatic air vent is opened — NO → Open the automatic air vent
3. Primary flow valve diaphragm damaged — YES → Replace diaphragm
   - NO → Flow valve rod obstructed

D

1. Continuity across flow microswitch and PCB - A5 connector terminals 7 & 8 — NO → Replace microswitch
2. Primary temperature sensor faulty. Cold resistance approx. 11K ohms (resistance reduces with increase in temp.) — YES → Replace sensor
3. Fan connections correct at fan. PCB - A2 connector, is 230V across terminals 5 & 7 — YES → Fan jammed or faulty winding — YES → Replace fan
   - NO → Replace PCB

spares & parts online IBASIS.CO.UK

E

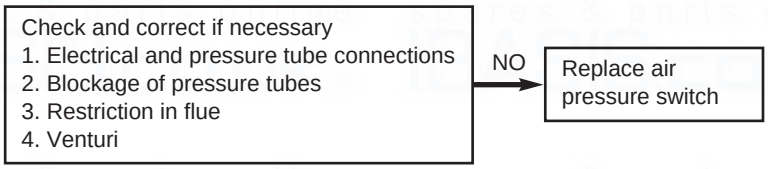

F

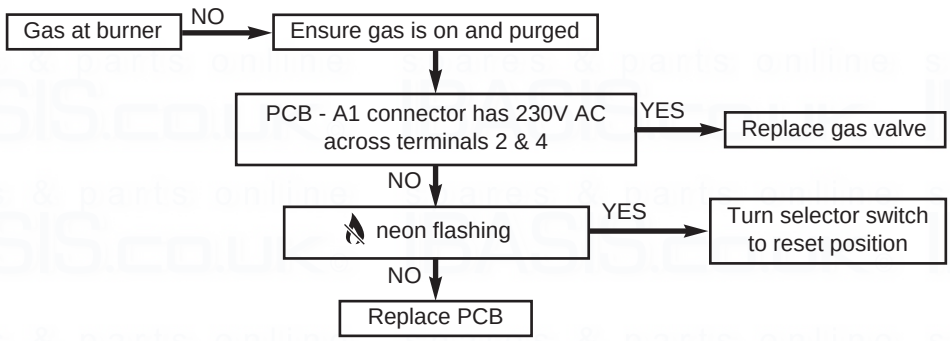

G

1. Check the burner setting pressure at the gas valve (see Section 9.2 of Commissioning)

2. Voltage at modulating coil of gas valve is:
Max. burner press.approx 9V DC (13V DC LPG)
Min. burner press.approx 1V DC

Current at modulating coil of gas valve is:
(Use an instrument with average function for this measure)
30 ÷ 230 mA DC (45 ÷ 310 mA DC LPG)

YES → Replace gas valve

NO → Replace PCB

H

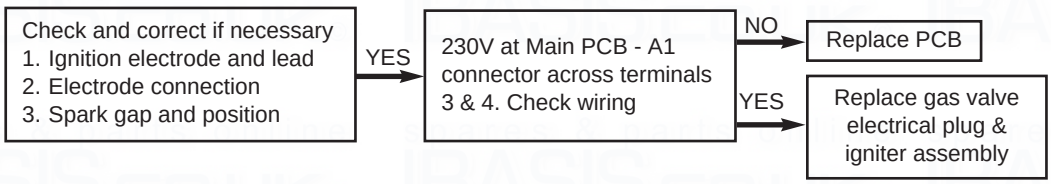

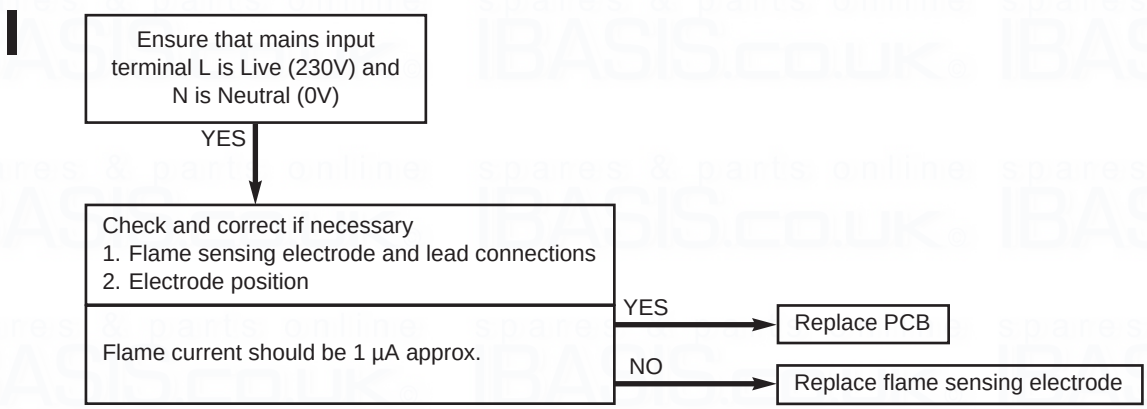
I
Ensure that mains input terminal L is Live (230V) and N is Neutral (0V)
YES
Check and correct if necessary
1. Flame sensing electrode and lead connections
2. Electrode position
Flame current should be 1 µA approx.
YES
Replace PCB
NO
Replace flame sensing electrode

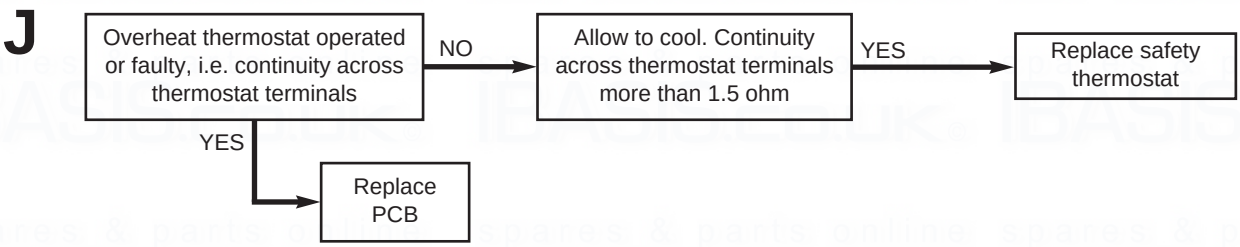
J
Overheat thermostat operated or faulty, i.e. continuity across thermostat terminals
NO
Allow to cool. Continuity across thermostat terminals more than 1.5 ohm
YES
Replace safety thermostat
YES
Replace PCB

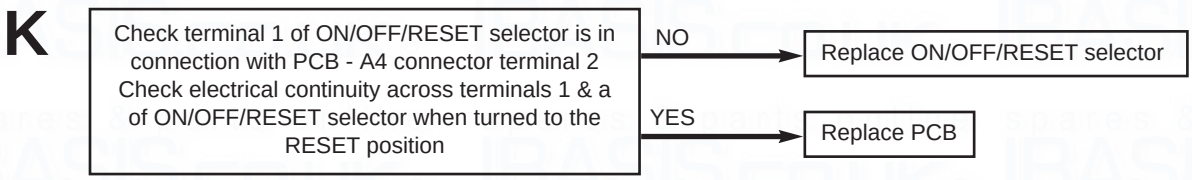
K
Check terminal 1 of ON/OFF/RESET selector is in connection with PCB - A4 connector terminal 2
Check electrical continuity across terminals 1 & a of ON/OFF/RESET selector when turned to the RESET position
NO
Replace ON/OFF/RESET selector
YES
Replace PCB

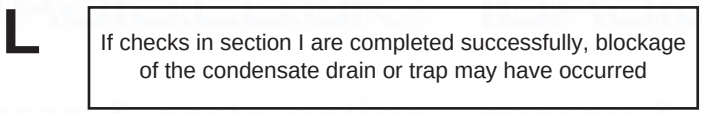
L
If checks in section I are completed successfully, blockage of the condensate drain or trap may have occurred

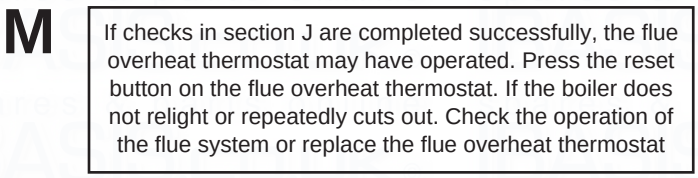
M
If checks in section J are completed successfully, the flue overheat thermostat may have operated. Press the reset button on the flue overheat thermostat. If the boiler does not relight or repeatedly cuts out. Check the operation of the flue system or replace the flue overheat thermostat

BENCHMARK No. 5 1 1 1 8 1 5

GAS BOILER COMMISSIONING CHECKLIST

BOILER SERIAL No. _____ **NOTIFICATION No.** _____

CONTROLS *To comply with the Building Regulations, each section must have a tick in one or other of the boxes*

TIME & TEMPERATURE CONTROL TO HEATING	ROOM T/STAT & PROGRAMMER/TIMER	☐	PROGRAMMABLE ROOMSTAT	☐
TIME & TEMPERATURE CONTROL TO HOT WATER	CYLINDER T/STAT & PROGRAMMER/TIMER	☐	COMBI BOILER	☐
HEATING ZONE VALVES	FITTED	☐	NOT REQUIRED	☐
HOT WATER ZONE VALVES	FITTED	☐	NOT REQUIRED	☐
THERMOSTATIC RADIATOR VALVES	FITTED	☐		
AUTOMATIC BYPASS TO SYSTEM	FITTED	☐	NOT REQUIRED	☐

FOR ALL BOILERS CONFIRM THE FOLLOWING

THE SYSTEM HAS BEEN FLUSHED IN ACCORDANCE WITH THE BOILER MANUFACTURER'S INSTRUCTIONS? ☐

THE SYSTEM CLEANER USED

THE INHIBITOR USED

FOR THE CENTRAL HEATING MODE, MEASURE & RECORD

GAS RATE		m^3/hr		ft^3/hr
BURNER OPERATING PRESSURE (IF APPLICABLE)	☐	N/A		mbar
CENTRAL HEATING FLOW TEMPERATURE				°C
CENTRAL HEATING RETURN TEMPERATURE				°C

FOR COMBINATION BOILERS ONLY

HAS A WATER SCALE REDUCER BEEN FITTED? YES ☐ NO ☐

WHAT TYPE OF SCALE REDUCER HAS BEEN FITTED?

FOR THE DOMESTIC HOT WATER MODE, MEASURE & RECORD

GAS RATE		m^3/hr		ft^3/hr
MAXIMUM BURNER OPERATING PRESSURE (IF APPLICABLE)	☐	N/A		mbar
COLD WATER INLET TEMPERATURE				°C
HOT WATER OUTLET TEMPERATURE				°C
WATER FLOW RATE				lts/min

FOR CONDENSING BOILERS ONLY CONFIRM THE FOLLOWING

THE CONDENSATE DRAIN HAS BEEN INSTALLED IN ACCORDANCE WITH THE MANUFACTURER'S INSTRUCTIONS? YES ☐

FOR ALL INSTALLATIONS CONFIRM THE FOLLOWING

THE HEATING AND HOT WATER SYSTEM COMPLIES WITH CURRENT BUILDING REGULATIONS ☐

THE APPLIANCE AND ASSOCIATED EQUIPMENT HAS BEEN INSTALLED AND COMMISSIONED IN ACCORDANCE WITH THE MANUFACTURER'S INSTRUCTIONS ☐

IF REQUIRED BY THE MANUFACTURER, HAVE YOU RECORDED A CO/CO_2 RATIO READING? N/A ☐ YES _____ CO/CO_2 RATIO

THE OPERATION OF THE APPLIANCE AND SYSTEM CONTROLS HAVE BEEN DEMONSTRATED TO THE CUSTOMER ☐

THE MANUFACTURER'S LITERATURE HAS BEEN LEFT WITH THE CUSTOMER ☐

COMMISSIONING ENG'S NAME PRINT _____ CORGI ID No. _____

SIGN _____ DATE _____

SERVICE INTERVAL RECORD

It is recommended that your heating system is serviced regularly
and that you complete the appropriate Service Interval Record Below.

Service Provider. Before completing the appropriate Service Interval Record below, please ensure you have carried out the service as described in the boiler manufacturer's instructions. Always use the manufacturer's specified spare part when replacing all controls

SERVICE 1 DATE
ENGINEER NAME
COMPANY NAME
TEL No.
CORGI ID CARD SERIAL No.
COMMENTS

SIGNATURE

SERVICE 2 DATE
ENGINEER NAME
COMPANY NAME
TEL No.
CORGI ID CARD SERIAL No.
COMMENTS

SIGNATURE

SERVICE 3 DATE
ENGINEER NAME
COMPANY NAME
TEL No.
CORGI ID CARD SERIAL No.
COMMENTS

SIGNATURE

SERVICE 4 DATE
ENGINEER NAME
COMPANY NAME
TEL No.
CORGI ID CARD SERIAL No.
COMMENTS

SIGNATURE

SERVICE 5 DATE
ENGINEER NAME
COMPANY NAME
TEL No.
CORGI ID CARD SERIAL No.
COMMENTS

SIGNATURE

SERVICE 6 DATE
ENGINEER NAME
COMPANY NAME
TEL No.
CORGI ID CARD SERIAL No.
COMMENTS

SIGNATURE

SERVICE 7 DATE
ENGINEER NAME
COMPANY NAME
TEL No.
CORGI ID CARD SERIAL No.
COMMENTS

SIGNATURE

SERVICE 8 DATE
ENGINEER NAME
COMPANY NAME
TEL No.
CORGI ID CARD SERIAL No.
COMMENTS

SIGNATURE

SERVICE 9 DATE
ENGINEER NAME
COMPANY NAME
TEL No.
CORGI ID CARD SERIAL No.
COMMENTS

SIGNATURE

SERVICE 10 DATE
ENGINEER NAME
COMPANY NAME
TEL No.
CORGI ID CARD SERIAL No.
COMMENTS

SIGNATURE

Publication No. 5111815 - Iss. **2** (04/2005)

General Enquiries (GB)
Tel. 08706 060 780

Technical (GB)
Tel. 08706 049 049

Service (GB)
Tel. 08706 096 096
Fax. 01926 410 006

Literature Request (GB)
Tel. 08706 060 623

Technical (IE)
Tel. 1850 560570

All descriptions and illustrations provided in this leaflet have been carefully prepared but we reserve the right to make changes and improvements in our products which may affect the accuracy of the information contained in this leaflet. All goods are sold subject to our standard Conditions of Sale which are available on request.

BAXI POTTERTON
A Trading Division of Baxi Heating UK Ltd
Brownedge Road Bamber Bridge Preston Lancashire PR5 6UP
After Sales Service 08706 096 096 Technical Enquiries 08706 049 049
Website www.potterton.co.uk

A BAXI GROUP company

POTTERTON

User's Guide

Performa 30 HE

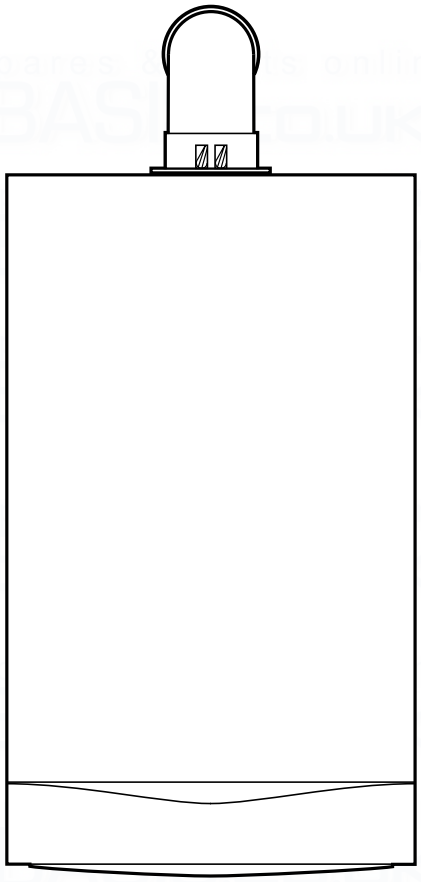

This is a Wall Mounted Powered Flue Condensing Combination Boiler Gas Fired Central Heating Unit.

The boiler meets the requirements of Statutory Instrument " The Boiler (Efficiency) Regulations 1993 N° 3083" and is deemed to meet the requirements of Directive 92/42/EEC on the energy efficiency requirements for new hot water boilers fired with liquid or gaseous fuels:-

Type test for purpose of Regulation 5 certified by:
Notified Body 0051.

Product/Production certified by:
Notified Body 0051.

For use in GB/IE only.

Natural Gas

Potterton Performa 30 HE
G.C.Nº 47 393 13

Where fitted, user label for optional timer to be applied here.

IMPORTANT - Installation, Commissioning, Service & Repair

This appliance must be installed in accordance with the manufacturer's instructions and the regulations in force. Read the instructions fully before installing or using the appliance.

In GB, this must be carried out by a competent person as stated in the Gas Safety (Installation & Use) Regulations.

Definition of competence: A person who works for a CORGI registered company and holding current certificates in the relevant ACS modules, is deemed competent.

In IE, this must be carried out by a competent person as stated in I.S. 813 "Domestic Gas Installations".

Lifting - This product should be lifted and handled by two people. Stooping should be avoided and protective equipment worn where necessary. Carrying & lifting equipment should be used as required, e.g. when installing in a loft space.

The addition of anything that may interfere with the normal operation of the appliance without express written permission from the manufacturer or his agent could invalidate the appliance warranty. In GB this could also infringe the Gas Safety (Installation and Use) Regulations.

Warning - Check the information on the data plate is compatible with local supply conditions.

Benchmark Commissioning Checklist

Please ensure that your installer hands you the boiler Installation & Service Instructions with the Benchmark Commissioning Checklist sections completed. The details in the Checklist will be required in the event of any warranty work. Keep the instructions in a safe place and ensure that the Service Interval Record at the back is completed at each service visit.

CORGI

All CORGI registered installers carry a CORGI identification card and have a registration number. You can check your installer is registered by telephoning 0870 4012300 or writing to:-

1 Elmwood,
Chineham Business Park,
Crockford Lane,
Basingstoke. RG24 8WG

or check online at www.corgi-gas-safety.com

This product has an energy rating (B) on a scale of A to G.
For more information see www.boilers.org.uk. This is a certification mark.

In an Emergency

If a water or gas leak occurs or is suspected, the boiler can be isolated at the inlet valves as follows;

1. Turn off the electrical supply and turn the selector switch on the facia box to the OFF position.

2. Using a suitable open ended spanner or screwdriver turn the square on the gas tap to the left to isolate the gas supply at the boiler (Fig. 1).

3. The isolating valves are positioned under the boiler and can be closed by turning their taps to the right towards the wall (Fig. 2).

4. Call your Installer or Service Engineer as soon as possible.

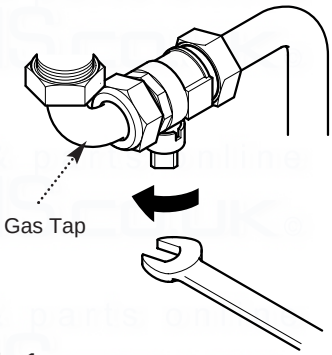

Fig. 1

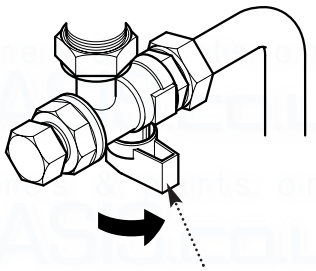

Fig. 2

In case of gas leaks

1. If a gas leak is found or suspected, turn off the gas supply at the meter immediately and at the isolating valve on the boiler if possible. Contact your Gas Supplier immediately.

Servicing your Appliance

1. For reasons of safety and economy your appliance should be serviced annually. Servicing must be performed by a competent person. Your Installer or Service Engineer will be able to advise you.

2. Any purpose provided ventilation should be checked periodically to ensure that it is free from obstruction.

Electricity Supply

1. **THIS APPLIANCE MUST BE EARTHED.**

2. A standard 230V ~ 50Hz supply is required. The appliance must be protected by a 3 amp fuse.

Never Hang Flammable Items Over The Appliance

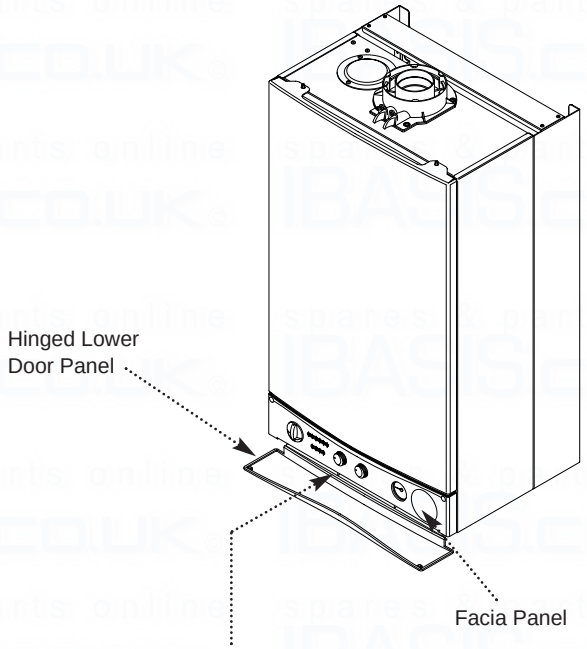

Introduction

1. Your Potterton Performa 30 HE is a gas fired, room sealed, powered flue condensing combination boiler, providing central heating for your home and mains fed domestic hot water to taps and shower. It is fully automatic and does not have a pilot light.

2. Priority is given to the hot water mode - when a hot water tap is turned on the supply of heat to the central heating circuit is interrupted.

3. Due to the high efficiency and resultant low flue gas temperature when in condensing mode a white plume of condensate will be emitted from the terminal. This will be particularly evident during periods of low outside temperature.

Facia Panel

1. The facia panel is behind the hinged lower door panel. As well as the on/off/reset selector switch, temperature control knobs and pressure gauge, the facia incorporates ten neon indicator lights.

2. Neons 12 to 15 indicate the operational status of the boiler. Neons 6 to 11 have a dual function, indicating the temperature of the central heating water when constantly illuminated. If a fault develops the appropriate neon will begin to flash.

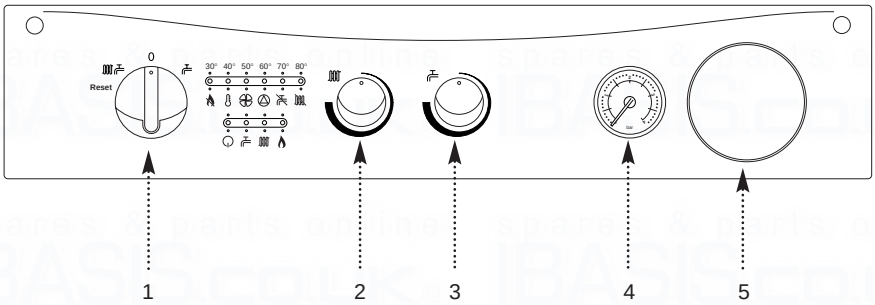

Fig. 3

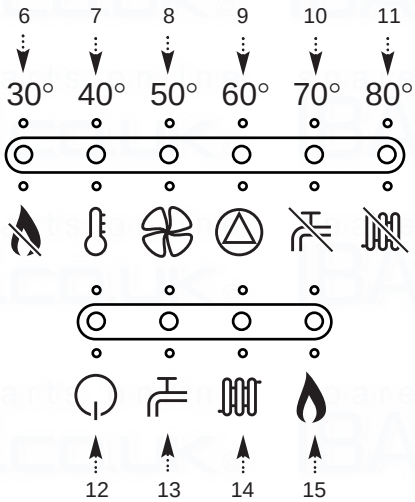

KEY TO FACIA PANEL (Fig. 3)

1. On/Off/Reset Selector Switch
2. Central Heating Temperature Control
3. Hot Water Temperature Control
4. Central Heating System Pressure Gauge
5. Optional Integral Timer Position

Neon Indicators

6. Flame Failure or Blocked Condensate Drain
7. Safety Thermostat Activated (Boiler or Flue)
8. Fault on Fan or Flue
9. Fault on Pump or Low System Pressure
10. Fault on Hot Water Sensor
11. Fault on Central Heating Sensor
12. Power On
13. Domestic Hot Water Mode
14. Central Heating Mode
15. Burner On

When neons 6 to 11 are constantly illuminated, they indicate the temperature of the central heating water

Operating the Boiler

1. Ensure that the electricity and gas supplies are turned on. Check that the central heating pressure is between 0.5 and 1.0 bar (Fig. 4).

2. Turn the On/Off/Reset selector switch either anti-clockwise from the OFF position (Fig. 6) to both central heating and domestic hot water or clockwise to domestic hot water only.

3. In either position the green power on neon ( ) will illuminate (Fig. 5).

4. **Position (i)** In this position the central heating will operate according to demand or provide domestic hot water when a tap or shower is turned on (Fig. 7). Priority is given to domestic hot water. The central heating neon ( ) will illuminate when the boiler is supplying central heating. If there is a demand for domestic hot water the ( ) neon will illuminate and the central heating neon ( ) will extinguish (Fig. 5). Neons 6 to 11 will illuminate as the temperature rises.

5. **Position (ii)** In this position hot water will be provided when a tap or shower is turned on (Fig. 8). The hot water neon ( ) will illuminate (Fig. 5).

6. The boiler will light automatically on demand.

7. The orange burner on neon ( ) will illuminate when the boiler is operating and the main burner is on (Fig. 5).

IMPORTANT: When the selector switch is in the '0' (Off) position the electrical supply to the boiler is isolated. The boiler will not operate and the integral timer (if fitted) will require resetting once the selector switch is set to either Position (i) or Position (ii).

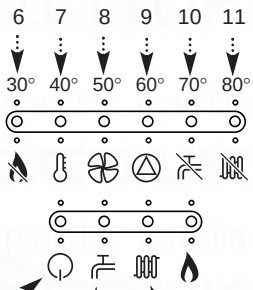

Power On Neon

Domestic Hot Water Neon

Central Heating Neon

Burner On Neon

Fig. 5

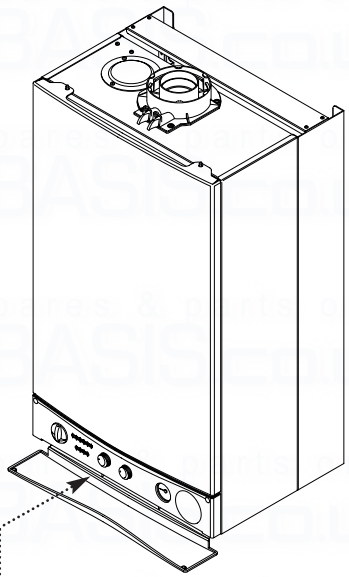

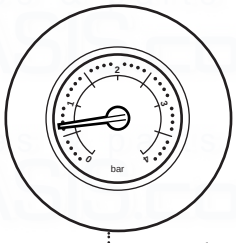

Fig. 4

Central Heating System Pressure Gauge

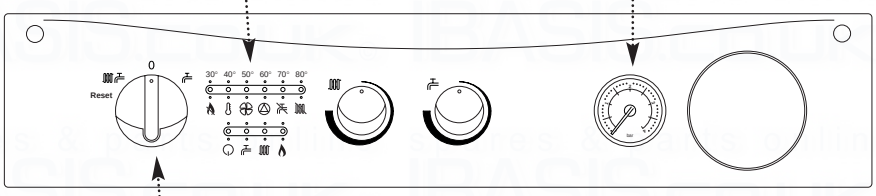

On/Off/Reset Selector Switch

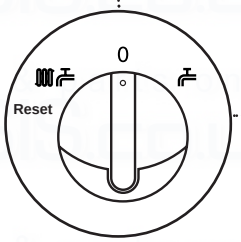

OFF Position

Fig. 6

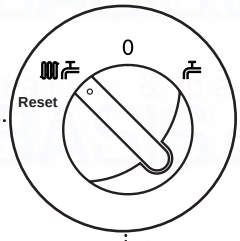

Position (i)
(Central Heating or Hot Water)

Fig. 7

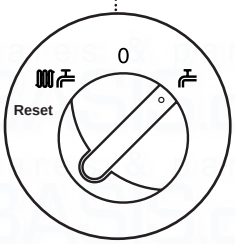

Position (ii)
(Hot Water)

Fig. 8

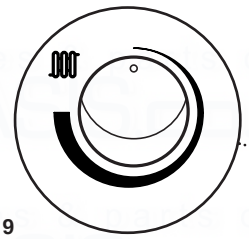

Fig. 9

Central Heating
Temperature Control

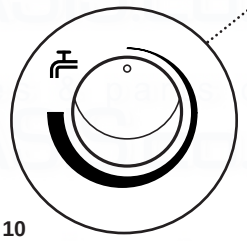

Fig. 10

Domestic Hot Water
Temperature Control

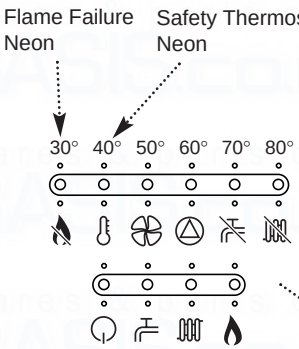

Fig. 11

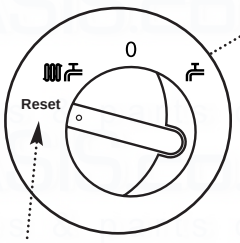

Reset Position

Fig. 12

Temperature Control

1. **Central Heating:** The central heating hot water flow temperature can be adjusted between 30° C (± 5° C) minimum and 85° C (± 5° C) maximum.

2. Turn the control knob clockwise to increase the temperature (Fig. 9).

3. In normal winter usage we recommend that the central heating temperature be set at maximum.

4. **Domestic Hot Water:** The temperature of the domestic hot water can be adjusted by turning the control knob clockwise to increase up to a maximum of 65° C (Fig. 10).

5. The temperature of the water is also dependent on the water flow rate and the temperature of the mains coming into the house.

6. By slightly reducing the flow from the tap the temperature will increase up to the maximum if required.

7. The flow rate can be reduced down to as low as 2.5 litre/min. The boiler will still recognise the need to heat the water.

Flame Failure Reset

1. The red flame failure neon ( ) will illuminate in the event of the burner failing to light, when incomplete lighting of the burner occurs or blockage of the condensate drain (Fig. 11).

2. Turn the selector switch fully anti-clockwise against the spring pressure to the 'Reset' position for at least two seconds and release (Fig. 12). Set the selector to the required position to light the boiler.

3. If the flame failure light illuminates repeatedly a fault is indicated with either the boiler, the gas supply or the condensate drain. Your Installer or Service Engineer should be contacted as soon as possible.

Safety Thermostat

1. Your Potterton Performa 30 HE is fitted with additional safety devices, which shut down the boiler in the event of the system, the boiler or the flue overheating. The safety thermostat neon ( ) will light in this instance (Fig. 11).

2. **To reset:** Turn the selector fully anti-clockwise against the spring pressure to the 'Reset' position, for at least two seconds and release (Fig. 12). Set the selector to the required position to light the boiler.

3. If after turning the selector to the 'Reset' position the boiler does not relight or the safety thermostat operates repeatedly, causing boiler shutdown, a fault is indicated. Your Installer or Service Engineer should be contacted as soon as possible.

Air Flow Monitor

1. The boiler is fitted with an air pressure sensing device. This monitors the flue system.

2. If the neon illuminates ( ) it indicates that the flue or flue terminal is blocked or obstructed in some way, or that there is an internal fault. If there is no external blockage of the flue terminal that can be easily removed contact your Installer or Service Engineer (Fig. 12).

Pump Fault or Low Pressure

1. The neon ( ) will illuminate if the circulating pump is faulty or the system pressure drops below the minimum requirement (Fig. 12).

2. Check the pressure gauge as described on page 8. If the pressure is in the normal range, a pump fault is indicated. Contact your Installer or Service Engineer to determine the nature of the fault.

Sensor Fault

1. When the ( ) or ( ) neon is illuminated a fault on the hot water or central heating temperature sensor is indicated (Fig. 12). Contact your Installer or Service Engineer.

Pump Protection

1. With the selector switch in either Position (i) or Position (ii) (Figs. 13 & 14) the pump will automatically operate for 1 minute in every 24 hours to prevent sticking.

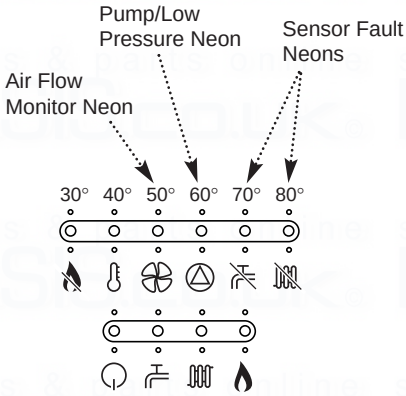

Fig. 12

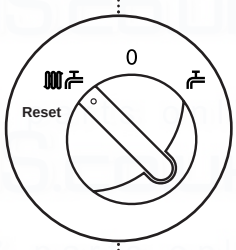

Fig. 13

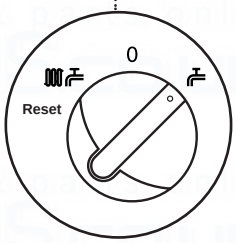

Fig. 14

Pressure Gauge

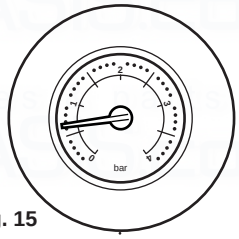

Fig. 15
Normal Pressure (when cold)

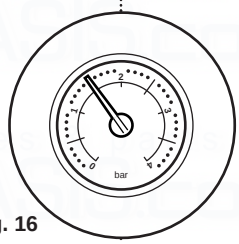

Fig. 16
Normal Pressure (operating)

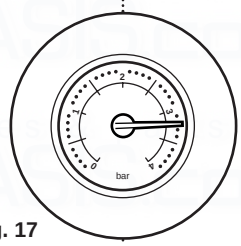

Fig. 17
Fault

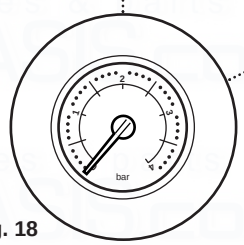

Fig. 18
Below Minimum

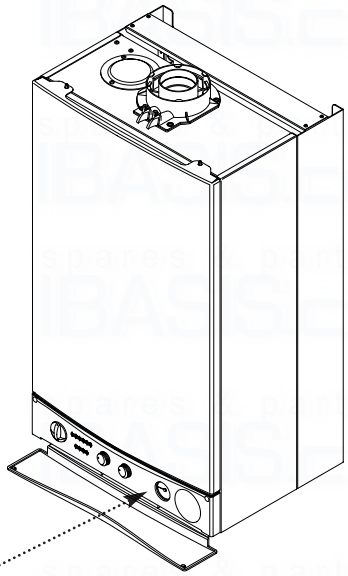

ON/OFF
Selector Switch

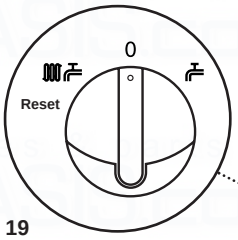

Fig. 19
OFF Position

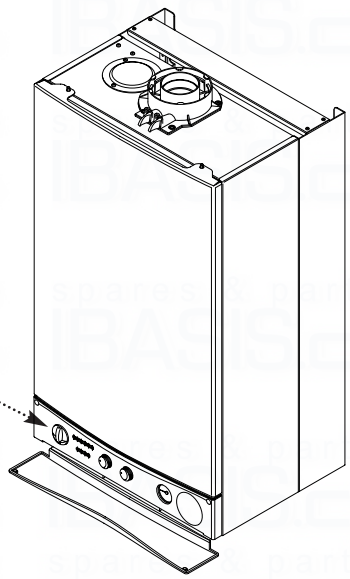

Central Heating System Pressure

1. The water pressure in the central heating system is indicated by the pressure gauge.

2. With the system cold and the boiler not operating the pressure should be between 0.5 and 1.0 bar. During operation the pressure should not exceed 2.5 bar, and will normally be between 1.0 and 2.0 (Figs. 15 & 16).

3. A pressure of 3 or greater indicates a fault. The safety pressure relief valve will operate, at a pressure of 3 (Fig. 17). **It is important that your Installer or Service Engineer is contacted as soon as possible.**

4. The MINIMUM pressure for correct operation is 0.5. If the pressure falls below 0.5, this may indicate a leak on the central heating system (Fig. 18).

To Shut Off the Boiler

1. **For short periods:** Turn the selector switch to the OFF position (Fig. 19).

2. **For long periods:** Turn off the selector switch (Fig.19), electricity and gas supplies.

> If your home is to be left unoccupied for long periods during cold weather the boiler and whole system should be drained unless there is additional frost protection.

3. Your installer will advise you about frost protection and draining the system.

> **IMPORTANT:** When the selector switch is in the ‘0’ (Off) position the electrical supply to the boiler is isolated. The boiler will not operate and the integral timer (if fitted) will require resetting once the selector switch is set to either Position (i) or Position (ii).

Frost Protection Mode

1. The frost protection feature will operate when the selector switch is in the central heating and domestic hot water mode.
The gas and electrical supplies to the boiler must be on and the system pressure must be within the range described above.

2. If the system temperature falls below 5°C, then the boiler will fire until the water temperature has been raised.

3. Further frost protection can be incorporated by using a frost thermostat to protect the whole system.

Clearances around the Boiler (Figs. 20 & 21)

1. The minimum clear spaces needed around the boiler measured from the casing are as follows:

Top	-	200mm	
Bottom	-	200mm	
Left Side	-	5mm	
Right Side	-	20mm/5mm	
Front	-	5mm	(In Operation)
	-	450mm	(For Servicing)

> ***NOTE:** The boiler can be operated with a clearance of 5mm at the right. This is also sufficient for routine maintenance. However a clearance of 20mm is required if it is necessary to remove the secondary heat exchanger. This should be considered when siting the appliance and in the event of any subsequent alteration in the area of installation.

2. **These areas must not be obstructed in any way. Blocking the clearance spaces may result in the boiler overheating and damage may occur.**

3. The gas burning compartment of your boiler is completely sealed from the room in which it is fitted. Products from the combustion of gas are vented to the outside through the flue terminal which must be kept free from obstruction as this would interfere with the correct operation of the boiler.

4. The boiler may be installed in a cupboard if these minimum clearances are kept. The compartment should be large enough to house the boiler and ancillary equipment only.

5. **IT SHOULD NOT BE USED AS A STORAGE CUPBOARD.**

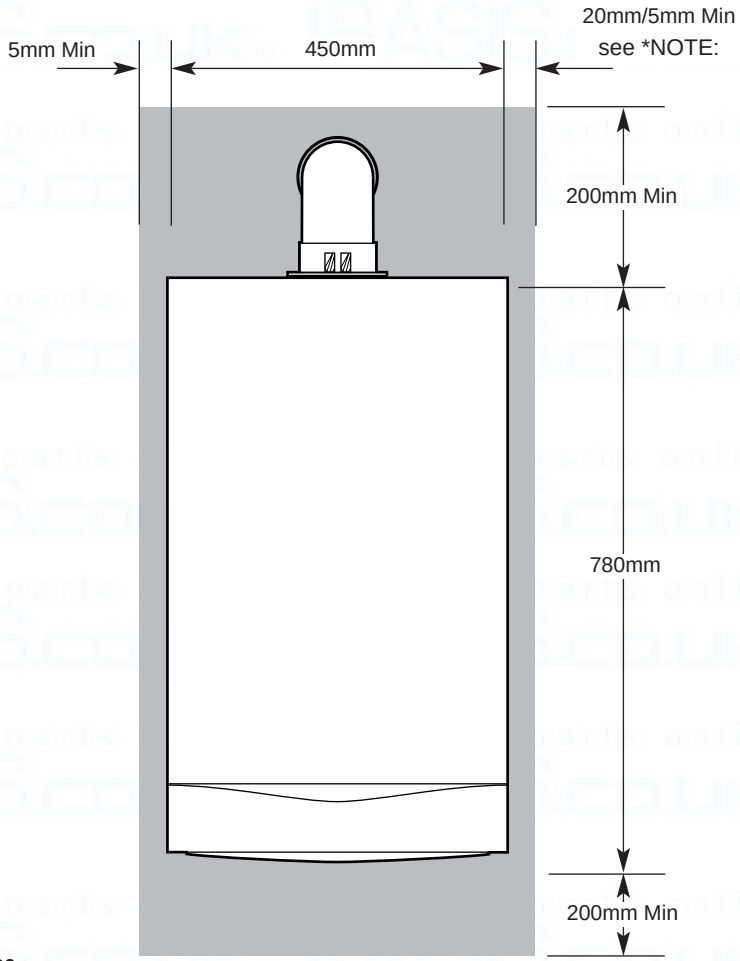

Fig. 20

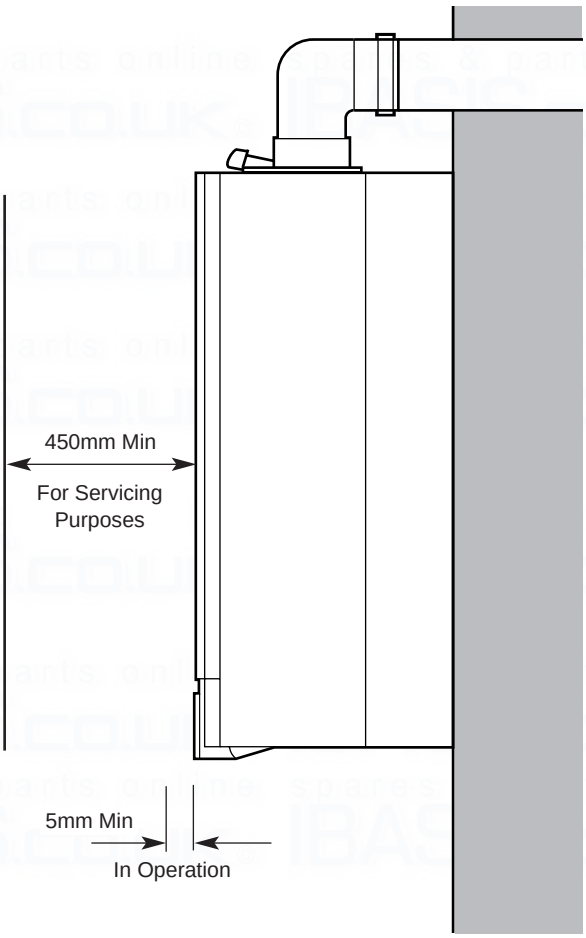

Fig. 21

Check List

1. If a fault develops, or is suspected, call your Service Engineer as soon as possible.

2. Go through the following check list before you make contact.

a) Is the electricity supply on ?
b) Is the selector switch on (giving a green “Power ON” neon) and set for both Central Heating and Domestic Hot Water ?
c) Is the red “Flame Failure” neon lit ? Turn the On/Off/Reset selector fully anti-clockwise.
d) Is the gas supply on ?
e) Is the mains water supply turned on ?
f) Is the system pressure correct ?
g) Are the boiler temperature controls set high enough?
h) Is the time clock (if fitted) calling for central heating ?
i) Is the room thermostat (if fitted) set high enough ?
j) Are the radiator valves open ?

Cleaning the Outercase

The painted panels should be wiped with a damp cloth and then dried completely. **DO NOT USE ABRASIVE CLEANING AGENTS.**

Spare Parts

IMPORTANT - Only a competent person should be used to service or repair this boiler.

1. Any repairs to the boiler will usually be the responsibility of the Installer during the guarantee period after which spare parts may be obtained through approved Potterton stockists if required.

2. Quote the appliance name, model number and where possible the part number when ordering spares. A parts list is included in the Installation and Servicing Instructions.

3. The name, model number and serial number can be found on the information label on the back of the hinged lower door (see back page).

Legislation

Potterton declare that no substances harmful to health are contained in the appliance or used during appliance manufacture.

The appliance is suitable only for installation in GB and IE and should be installed in accordance with the rules in force, and only used in a suitably ventilated location.

In GB, the installation must be carried out by a CORGI Registered Installer. It must be carried out in accordance with the relevant requirements of the:

- Gas Safety (Installation & Use) Regulations.
- The appropriate Building Regulations either The Building Regulations, The Building Regulations (Scotland), Building Regulations (Northern Ireland).
- The Water Fittings Regulations or Water Byelaws in Scotland.
- The Current I.E.E. Wiring Regulations.

Where no specific instructions are given, reference should be made to the relevant British Standard Code of Practice.

In IE, the installation must be carried out by a competent Person and installed in accordance with the current edition of I.S. 813 'Domestic Gas Installations', the current Building Regulations and reference should be made to the current ETCI rules for electrical installation.

All systems must be thoroughly flushed and treated with inhibitor.

Codes of Practice, most recent version should be used

In GB the following Codes of Practice apply:

Standard	Scope
BS 6891	Gas Installation.
BS 5546	Installation of hot water supplies for domestic purposes.
BS 5449	Forced circulation hot water systems.
BS 6798	Installation of gas fired hot water boilers.
BS 5440 Part 1	Flues.
BS 5440 Part 2	Ventilation.
BS 7074	Expansion vessels and ancillary equipment for sealed water systems.
BS 7593	Treatment of water in domestic hot water central heating systems.

In IE the following Codes of Practice apply:

Standard	Scope
I.S. 813	Domestic Gas Installations.

The following BS standards give valuable additional information;

BS 5546	Installation of hot water supplies for domestic purposes.
BS 5449	Forced circulation hot water systems.
BS 7074	Expansion vessels and ancillary equipment for sealed water systems.
BS 7593	Treatment of water in domestic hot water central heating systems.

Publication No. 5111816 - Iss. **2** (04/2005)

When contacting Baxi Potterton please have the following information to hand:

Appliance Name
Model Number
Serial Number

A label giving these details is situated on the rear of the hinged lower door panel.

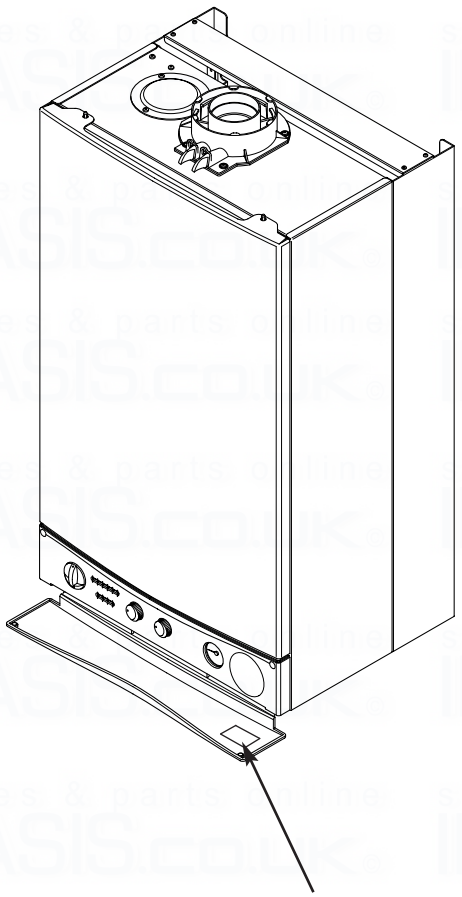

General Enquiries (GB)
Tel. 08706 060 780

Technical (GB)
Tel. 08706 049 049

Service (GB)
Tel. 08706 096 096
Fax. 01926 410 006

Literature Request (GB)
Tel. 08706 060 623

Technical (IE)
Tel. 1850 560570

All descriptions and illustrations provided in this leaflet have been carefully prepared but we reserve the right to make changes and improvements in our products which may affect the accuracy of the information contained in this leaflet. All goods are sold subject to our standard Conditions of Sale which are available on request.

BAXI POTTERTON
A Trading Division of Baxi Heating UK Ltd
Brownedge Road Bamber Bridge Preston Lancashire PR5 6UP
After Sales Service 08706 096 096 Technical Enquiries 08706 049 049
Website www.potterton.co.uk

A BAXI GROUP company