POTTERTON

Installation & Service Instructions

Suprima 100

Wall Mounted Fan Assisted
Balanced Flue Gas Boilers

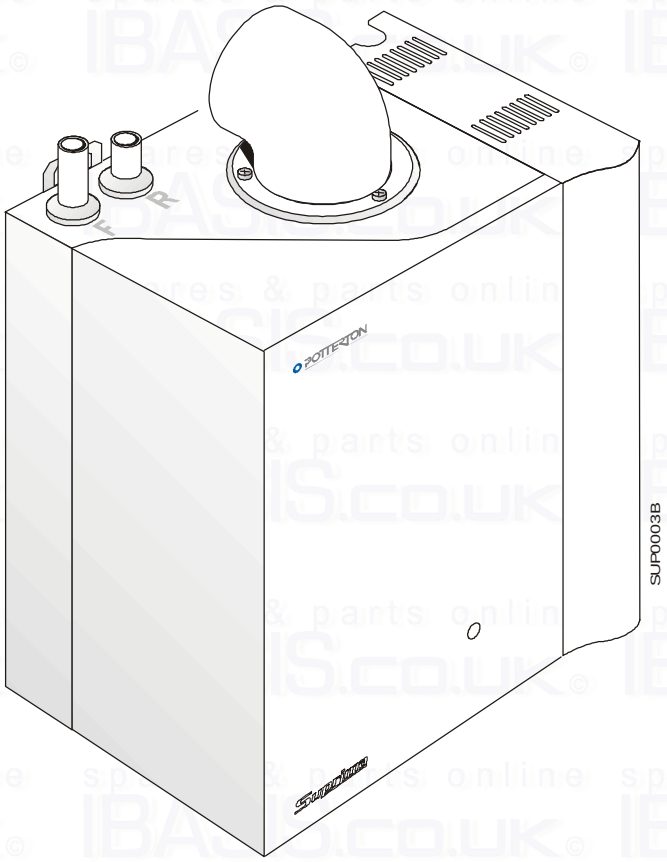

THE GAS SAFETY (INSTALLATION AND USE) REGULATIONS 1994 (as amended).

‘‘ In your own interest, and that of safety, it is law that all gas appliances are installed by competent persons, in accordance with the above regulations. Failure to install appliances correctly could lead to prosecution.’’

Installation must be in accordance with the Installation & Service Instructions and the rules in force.

LEAVE THESE INSTRUCTIONS WITH THE USER FOR USE ON FUTURE CALLS

For Use With Natural Gas (G20) Only At 20mbar
For Use in GB & IE

IMPORTANT
PLEASE READ THIS BOOK BEFORE INSTALLING, OPERATING OR SERVICING THIS BOILER.

Contents - Page2

Technical Data 3

Introduction 4

1. Installation Requirements 4
1.1 Health & Safety Information 4
1.2 Codes of Practice 4
1.3 Gas Supply 5
1.4 Electricity Supply 5
1.5 Location of Boiler 5
1.6 Air Supply 7
1.7 Flue Systems 7
1.8 Flue Terminal Location 8
1.9 The System 8
Flue Kits 12
Other Kits 13

2. Installation 14
2.1 Unpack & Prepare the Boiler 14
2.2 Install the Flue 15
2.3 Connect the Power Supply Cable 16
2.4 Install the Optional Programmer 17
2.5 Connect the Gas Supply 17
2.6 Connect the Water Supply 18

3. Commissioning 19
3.1 Commission the Boiler 20
3.2 Final Adjustments 21
3.3 Instruct the User 21
3.4 Advise the User 21

4. To Service the Boiler & Component Replacement 22
4.1 General Access 22
4.2 To Service the Boiler 23
4.3 Component Replacement 23
4.3.1 Electronic Control Board 24
4.3.2 Air Pressure Switch 24
4.3.3 Electrode 24
4.3.4 Burner 25
4.3.5 Combustion Chamber Insulation 25
4.3.6 Gas Valve 26
4.3.7 Injector 27
4.3.8 Fan & Flue Hood 27
4.3.9 Temperature Sensor 28
4.3.10 Overheat Thermostat 28
4.3.11 Heat Exchanger 29

5. Functional Wiring Diagram 30

6. Wiring Diagrams 31

7. Fault Finding 32

8. Short List of Spares 34

The models covered by these instructions are:-

Suprima 100 - G.C. No.41 607 82

The boiler model and serial number are given on the boiler data label which is located on the right hand side of the chassis and visible after opening the controls door.

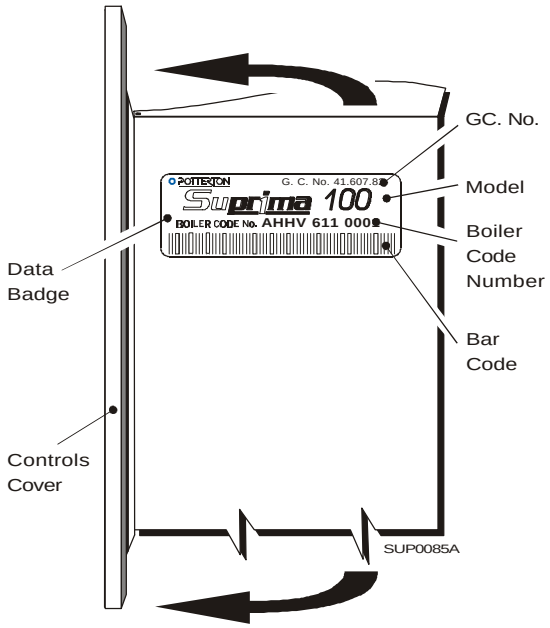

Nominal Boiler Ratings

Boiler Models	Output		Input		Burner Setting pressure		Gas Rate		Injector Size
	kW	Btu/h	kW	Btu/h	mbar	in wg	m³/h	ft³/h	mm dia
100	28.72	98,000	35.9	122,500	13.6	5.54	3.42	120.9	3.2

Maximum Working Head Minimum Working Head	30.5 m (100 ft) 150 mm (6 in)
Gas Supply Pressure Gas Supply Connection	20 mbar Rc. ½(½in BSP Female)
Maximum Flow Temperature Flow/Return Connections Water Content	82°C 22 mm Copper 2.1 litres (0.46 gal)
Appliance Lift Weight Appliance Weight Installed - Dry	34.6 kg (76.3 lbs) 100 Model 39.7 kg (87.5 lbs) 100 Model
Electricity Supply Internal Fuse Power Consumption	230v ~ 50Hz Fused at 3A Type 3.15AT 80 Watts (excluding pump)
Classifications	CAT 1_2H C12 & C32 IP20

SAFETY, PERFORMANCE & QUALITY

Suprima boilers have been assessed by a Government appointed Notified Body and shown to meet the 'Essential Requirements' of the European Gas Appliance Directive.

The Directive lays down requirements for the safety and efficiency of the appliance, together with its design, construction, and use of materials.
It also requires the production process to be covered by an approved and monitored system of quality assurance.

Gas Safety (Installation & Use) Regulations 1994 (As Amended).

This appliance must be installed and serviced by a competent person, in accordance with the above regulations.

In the UK 'Corgi' Registered Installers (including the regions of British Gas Plc) undertake to work to a safe and satisfactory standard.

Failure to install appliances correctly could lead to prosecution.

It is in your own interest, and that of safety, to ensure that the regulations are complied with.

Suprima boilers are fully automatically controlled, wall mounted, fan powered, balanced flue appliances using a cast iron heat exchanger.

The boilers are designed for use on fully pumped open vented or sealed water systems with an indirect hot water cylinder.

THEY MUST NOT BE CONNECTED TO A DIRECT CYLINDER.

The boilers are for use on Natural Gas (G20) only.

Samples of the Potterton Suprima gas boilers have been examined by British Gas Plc, a United Kingdom Notified Body. The range is certified to comply with the essential requirements of the Gas Appliance Directive 90/396/EEC, the Low Voltage Directive 72/23/EEC and shows compliance with the Electro Magnetic Compatibility Directive 89/336/EEC and are therefore permitted to carry the CE Mark.

Delivery & Kits Available

The unit is delivered in two packages (1) the boiler with fittings and (2) the flue/terminal assembly. See page 12 for flue options.

Various kits are available for the Suprima 100, see page 13.

1. Installation Requirements - Page 4

1.1 Health and Safety Information for the Installer and Service Engineer

Under the Consumer Protection Act 1987 and Section 6 of the Health and Safety at Work Act 1974, we are required to provide information on substances hazardous to health.

Small quantities of adhesives and sealants used in the product are cured and present no known hazards.

The following substances are also present.

Insulation and Seals

Material - Man Made Mineral Fibre.

Description - Boards, Ropes, Gaskets.

Known Hazards - Some people can suffer reddening and itching of the skin. Fibre entry into the eye will cause foreign body irritation which can cause severe irritation to people wearing contact lenses. Irritation to respiratory tract.

Precautions - Dust goggles will protect eyes. People with a history of skin complaints may be particularly susceptible to irritation. High dust levels are only likely to arise following **harsh** abrasion.In general, normal handling and use will not present high risk, follow good hygiene practices, wash hands before, touching eyes, consuming food, drinking or using the toilet.

First Aid - Medical attention must be sought following eye contact or prolonged reddening of the skin.

1.2 Codes of Practice

The boiler must be installed in accordance with: The Gas Safety (Installation and Use) Regulations 1994 (As Amended) and the current issue of:-

The Building Regulations, Building Standards (Scotland) Regulations, Local Building Regulations, Model and local Water Undertaking Bye-laws, IEE Wiring Regulations and Health & Safety Document No. 635 "The Electrician At Work Regulations 1989".

1.3 Gas Supply

The meter and supply pipes must be capable of delivering this quantity of gas in addition to the demand from any other appliances in the house and must be governed at the meter.

The complete installation must be tested for gas soundness and purged as described in BS6891.

1.4 Electricity Supply

230V ~ 50Hz via a fused double pole switch with a contact separation of at least 3 mm in both poles adjacent to the boiler. Power consumption is approximately 150W. There must be only one common isolator for the boiler and its control system and it must provide complete electrical isolation.

Fuse the supply at 3 A. The minimum requirement for the power supply cable is that it should be a PVC sheathed cord at least 0.75 mm² (24 x 0.2 mm) (code designation HO5 VV-F or HO5 VVH2-F) as specified in table 16 of BS6500:1984.

All wiring external to the boiler shall comply with the latest IEE Wiring Regulations, and any local regulations which apply.

WARNING: THIS APPLIANCE MUST BE EARTHED.

In the event of an electrical fault after installation of the boiler, preliminary electrical systems checks must be carried out i.e. Earth Continuity, Short Circuit, Polarity and Resistance to Earth.

1.5 Location of Boiler

The boiler is not suitable for external installation unless it is suitably protected.

The boiler must be installed so that the flue terminal is exposed to the external air. It is important that the position of the terminal allows the free passage of air across it at all times.

The boiler must be mounted on a flat wall which is sufficiently robust to take the weight of the boiler.

The boiler is suitable for installation to a combustible wall e.g. wood cladding, provided that the flue duct is not closer than 25 mm to combustible material. A metal sleeve should be installed to surround the flue duct to provide a 25mm annular space. Further guidance is given in BS5440:1:1990, sub-clauses 3.3 and 4.2.5.

If the boiler is to be installed in a timber framed building it should be fitted in accordance with the British Gas publication- Part 19 - Building and Kitchen Work. If in doubt advice must be sought from Potterton Myson.

The boiler may be installed in any room, although particular attention is drawn to the requirements of the current IEE Wiring Regulations and, in Scotland, the electrical provisions of the Building Standards applicable in Scotland with respect to the installation of the boiler in a room containing a bath or shower.

Where a room-sealed appliance is installed in a room containing a bath or shower, any electrical switch or appliance control, utilising mains electricity should be so situated that it cannot be touched by a person using the bath or shower.
Where the installation of the boiler will be in an unusual position, special procedures may be necessary and BS6798 and BS5546 give detailed guidance on this aspect.

A cupboard or compartment used to enclose the boiler must be designed and constructed specifically for this purpose. An existing cupboard or compartment may be used provided that it is modified for the purpose. Details of essential features of cupboard/compartment design including airing cupboard installations are given in BS6798 and BS5546 and should be complied with.

The boiler requires only the clearances shown on Page 6, after installation.

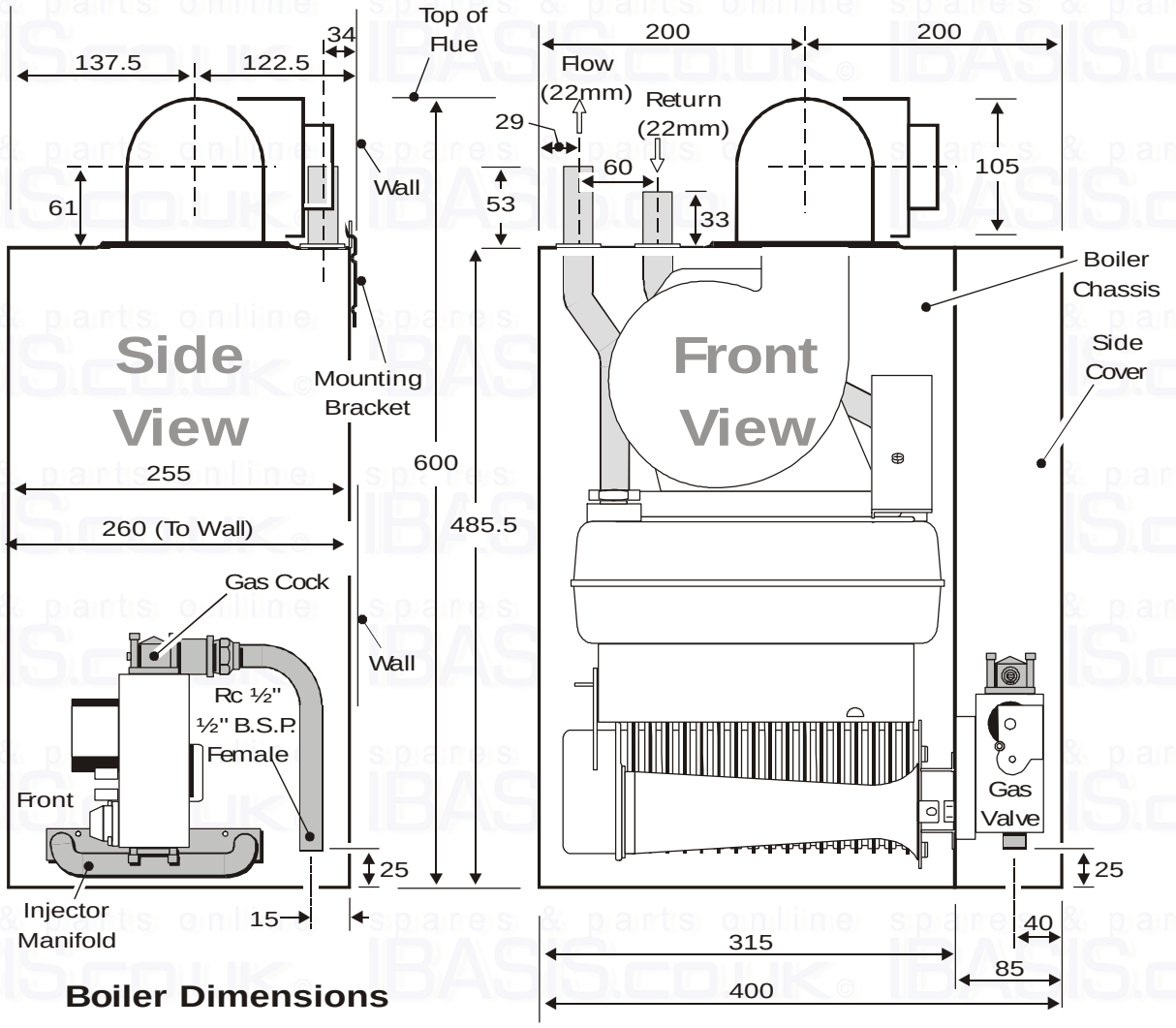

Boiler Dimensions

All Dimensions in mm

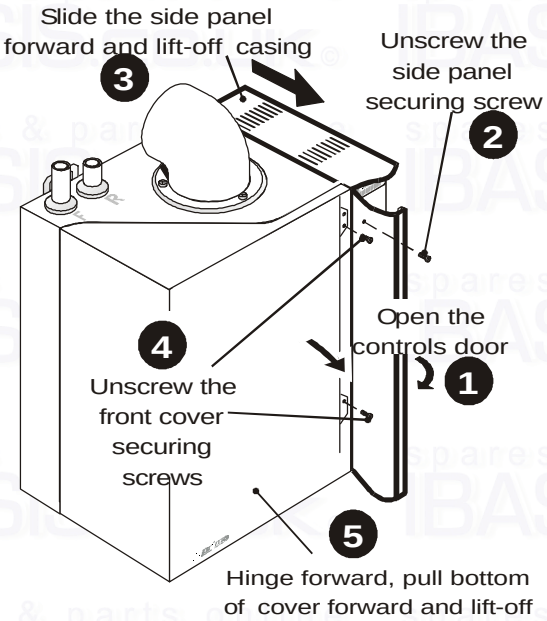

Remove The Outer Case

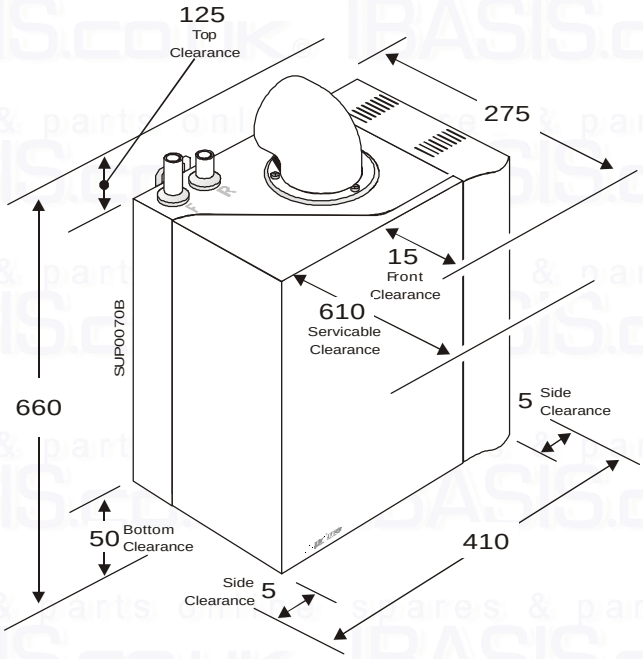

Boiler Clearances

1.6 Air Supply

The air requirements must meet BS 5440 Part 2.
The room in which the boiler is installed does not require a purpose provided air vent.
If the boiler is installed in a cupboard or compartment, permanent air vents are required in the cupboard or compartment, one at high level and one at low level, either direct to the outside air or to a room. Both high level and low level air vents must communicate with the same room or must be on the same wall to outside air. Both the high level and low level vent must each have a free area as stated below. The free area of each vent may be halved if the ventilation is provided directly from outside.

Free Area - 323 cm^2

If the boiler is installed in a cupboard or compartment with a door, allow at least 15 mm clearance between the front of the boiler and the door for air movement.

1.7 Flue Systems

Horizontal

The flue/terminal assembly supplied is suitable for a wall thickness of between 150mm and 400mm.

A flue/terminal assembly suitable for a wall thickness of up to 600mm is also available.

Both the flue/terminal assemblies are telescopic and the minimum lengths (150mm/6in) are achieved by cutting with an overlap of 20mm.

Under no circumstances should the total flue length exceed 680mm (no bends allowed).

Vertical

Vertical Concentric system.

Maximum actual length 1.4m, no bends allowed.

1.8 Flue Terminal Location

If a horizontal flue is sited less than 2m above a balcony, above ground, or above a flat roof to which people have access, a suitable terminal guard must be fitted. This serves two purposes, to protect the terminal against damage or interference and to protect passers-by. A terminal guard is available (Sales Code: PTERMGUARDEF).

Note: Where a flue terminal is installed less than 1 metre from a plastic, or painted gutter, or 500mm from painted eaves, an aluminium shield 1 metre long, should be fitted to the underside of the gutter or painted surface. A suitable wall plate should be fitted to the painted wall surface of a mobile home.

IMPORTANT: It is absolutely ESSENTIAL, to ensure that products of combustion discharging from the terminal cannot re-enter the building, or any other adjacent building, through ventilators, windows, doors, natural air infiltration, or forced ventilation/air conditioning. If products of combustion are found to be re-entering any building, the appliance MUST be turned OFF IMMEDIATELY.

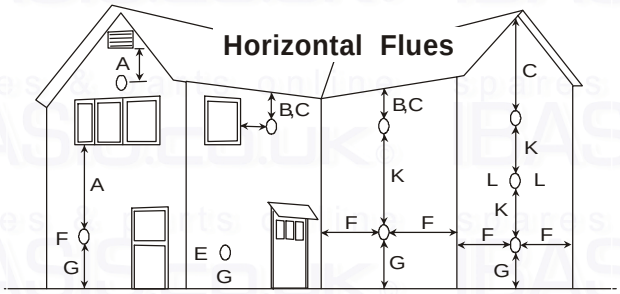

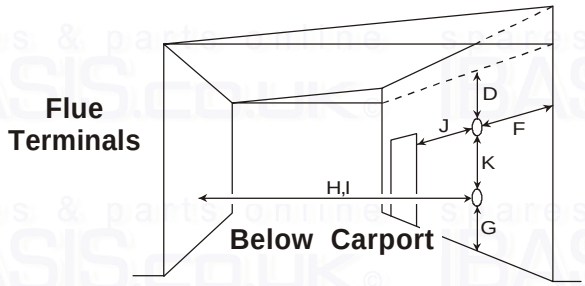

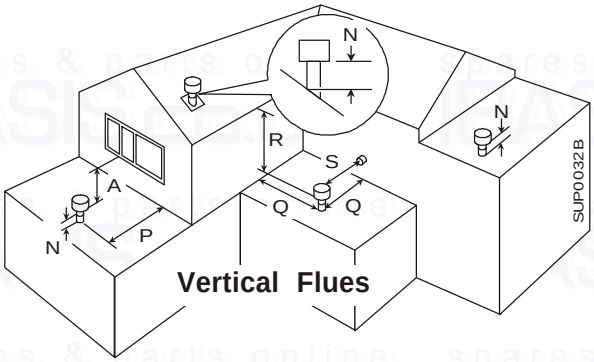

POSITION		MIN. DISTANCE mm TO EDGE OF TERMINAL
HORIZONTAL FLUES		
A	DIRECTLY BELOW AN OPENABLE WINDOW, AIR VENT, OR ANY OTHER VENTILATION OPENING	300
B	BELOW GUTTER, DRAIN/SOIL PIPE	25
C	BELOW EAVES	25
D	BELOW A BALCONY/CARPORT ROOF	25
E	FROM VERTICAL DRAIN PIPES AND SOIL PIPES	25
F	FROM INTERNAL OR EXTERNAL CORNERS	100
G	ABOVE ADJACENT GROUND OR BALCONY LEVEL	300
H	FROM A SURFACE FACING THE TERMINAL	600
I	FACING TERMINALS	1,200
J	FROM OPENING (DOOR/WINDOW) IN CARPORT INTO DWELLING	1,200
K	VERTICALLY FROM A TERMINAL ON THE SAME WALL	1,500
L	HORIZONTALLY FROM A TERMINAL ON THE SAME WALL	300
N	ABOVE ROOF LEVEL (TO BASE OF TERMINAL)	300
P	FROM ADJACENT WALL TO FLUE	210
Q	FROM INTERNAL CORNER TO FLUE	230
R	BELOW EAVES OR BALCONY	600
S	FROM FACING TERMINAL	1,200

1.9 The System

The boiler must be used on Indirect Fully Pumped systems only, which may be sealed or open vented.

The system should be designed so that the maximum static head does not exceed 30.5m (100ft) and a minimum of 150mm (6in).

On all systems the pump live connection should be wired to the boiler terminal block, it will then be controlled by the pump over-run. This will ensure that the pump will continue to run after boiler shut down if the water temperature is high, thus preventing nuisance operation of the overheat thermostat.

It is important that where electrically operated zone valves are used the boiler is wired so it does not cycle when the zone valves are closed. Also, systems fitted with controls that close both hot water and central heating circuits while the boiler is still hot, must be fitted with a by-pass circuit to dissipate the residual heat from within the boiler.

If a three port valve is used as shown in Fig. 3 a by-pass is not necessary since one circuit is always open.

Where a pair of two port valves are used, a by-pass is necessary. The total length of the by-pass circuit taken from the boiler connections should be greater than 4 metres of 22mm pipe. It should be fitted with a lockshield valve and be adjusted to maintain a minimum flow through the boiler of 4.5litres/min (1 gal/min).

Systems fitted with controls which allow the boiler to operate when both the hot water and central heating circuits are closed i.e. mechanically operated thermostatic control valves, must be fitted with a by-pass circuit of:-

1. A minimum length of bypass of 2m of 22mm dia. pipe.
2. Maintaining a minimum water flow rate through the boiler of 9 litres/min (2 gal/min).

A suggested method of meeting these requirements by using a bathroom radiator fitted with two lockshield valves is shown in Fig. 3.
Additional system information can be found in the Control Systems, pipework and Wiring Guide.
Drain off taps should be fitted in the pipework close to the boiler and in the low points of the system.

Note: Although the system can be emptied using the drain off taps installed in the pipework around the system, to empty the boiler it is necessary to remove the drain off screw positioned on the heat exchanger.

Sealed Systems

Installation
The installation must comply with the requirements of BS 6798: 1987 and BS 5449: Pt 1. The British Gas publication "British Gas Specification for Domestic Wet Central Heating Systems" should also be consulted.

Pressure Relief Valve
A non-adjustable spring-loaded pressure relief valve, preset to operate at 3 bar (45lbf/in²) shall be used. It must comply with BS 6759: Pt 1. and include a manual testing device. It shall be positioned in the flow pipe either horizontally or vertically upwards and close to the boiler. No shut-off valves are to be placed between the boiler and the safety valve. The valve should be installed with a discharge pipe which permits the safe discharge of steam and hot water such that no hazard to persons or damage to electrical components is caused.

Pressure Gauge
A pressure gauge incorporating a fill pressure indicator, covering the range 0 - 4 bar (60 lbf/in²) shall be fitted to the system. It should be connected to the system, preferably at the same point as the expansion vessel. Its location should be visible from the filling point.

Expansion Vessel
A diaphragm type expansion vessel to BS 4814: Pt 1. shall be fitted close to the inlet side of the pump. The connecting pipework should not be less than 15mm. Pipework connecting the expansion vessel should not incorporate valves of any sort. Methods of supporting the vessel are supplied by the vessel manufacturer. The nitrogen or air charge pressure of the expansion vessel shall not be less than the hydrostatic head, (height of the top point of the system above the expansion vessel). To size the expansion vessel it is first necessary to calculate the volume of water in the system in litres. The following volumes may be used as a conservative guide to calculating the system volume.

Boiler Heat Exchanger:	2.1 litres
Small Bore Pipework:	1 litre per kW of system output
Micro Bore Pipework:	7 litres
Steel Panel Radiators:	8 litres per kW of system output
Low Water Capacity Radiators:	2 litres per kW of system output
Hot Water Cylinder:	2 litres

If the system is extended, the expansion vessel volume may have to be increased unless provision has been made for extension. Where a vessel of the calculated size is not available, the next available larger size should be used. The boiler flow temperature is controlled at approximately 82°C.

The vessel size can now be determined from the information in Table 1 where V = System volume in litres.

Vessel Charge Pressure (bar)	0.5	1.5
Initial System Pressure (bar)	1.0	1.0
Expansion Vessel Volume (litres)	V x 0.11	V x 0.087

Table 1.

Cylinder
The hot water cylinder must be an indirect coil type or a direct cylinder fitted with an immersion calorifier suitable for operating at a gauge pressure of 0.3 bar (5 lbf/in²) in excess of safety valve setting. Single feed indirect cylinders are not suitable for sealed systems.

Method of Make-up
Provision shall be made for replacing water loss from the system either:-

i) from a make-up vessel or tank mounted in a position higher than the top point of the system, and connected through a non-return valve to the system on the return side of the hot water cylinder or the return side of all heat emitters.
or
ii) where access to a make-up vessel would be difficult by using the mains top up method or a remote automatic pressurisation and make-up unit as shown in Figs. 5 & 6.

Mains Connection
There shall be no connection to the mains water supply or to the water storage tank which supplies domestic hot water even though a non-return valve, without the approval of the Local Water Authority.

Filling Point
The system shall be fitted with a filling point at low level which incorporates a stop valve to BS 1010 and a double check valve (approved by the National Water Council) to be fitted in this order from the system mains, see Fig. 5.

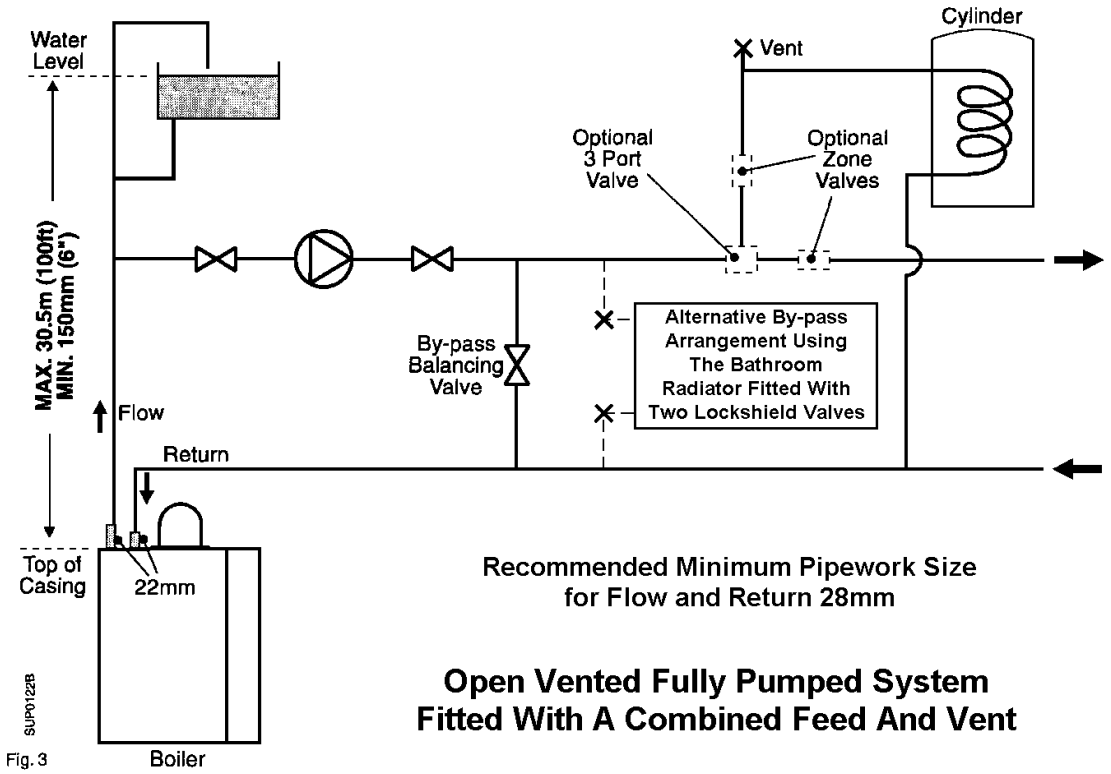

Fig. 3

Recommended Minimum Pipework Size for Flow and Return 28mm

Open Vented Fully Pumped System Fitted With A Combined Feed And Vent

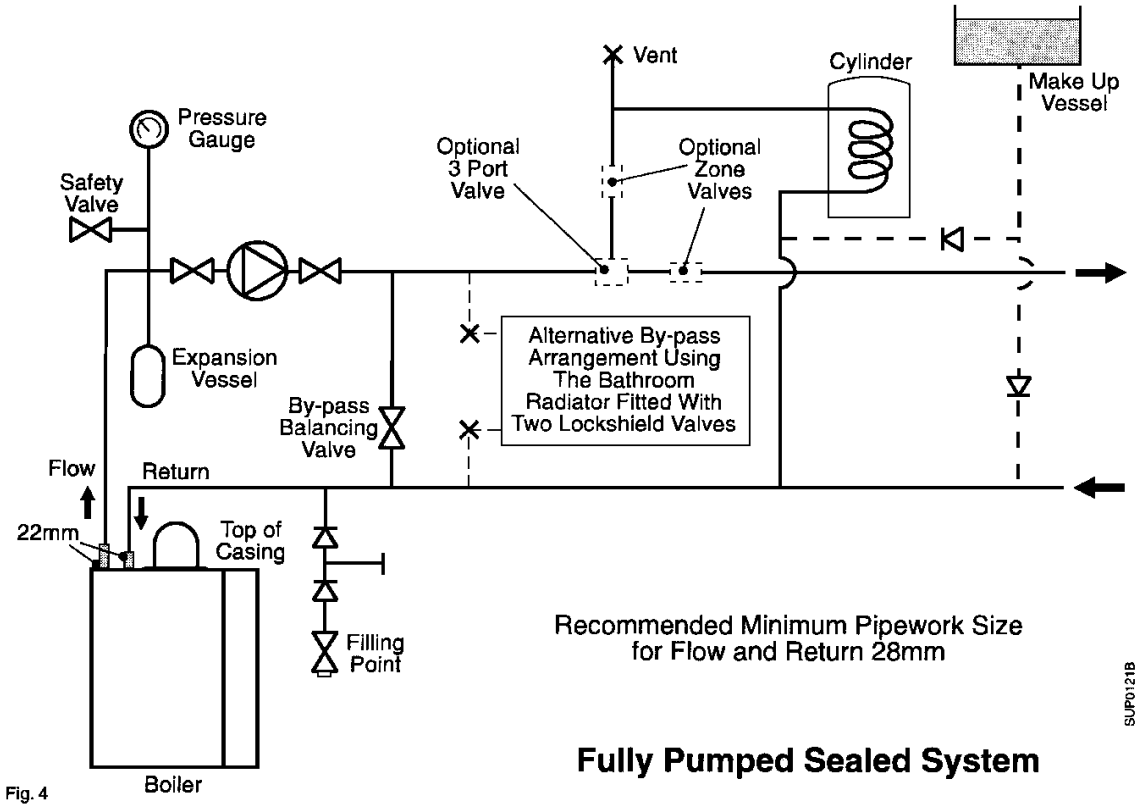

Fig. 4

Recommended Minimum Pipework Size for Flow and Return 28mm

Fully Pumped Sealed System

Fig. 5

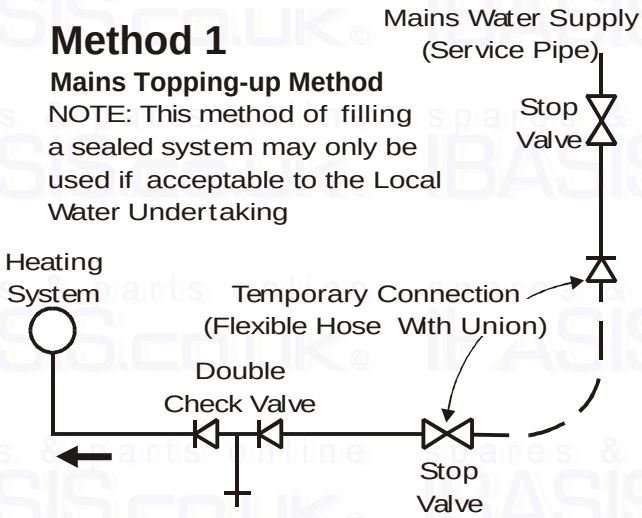

Fig. 6

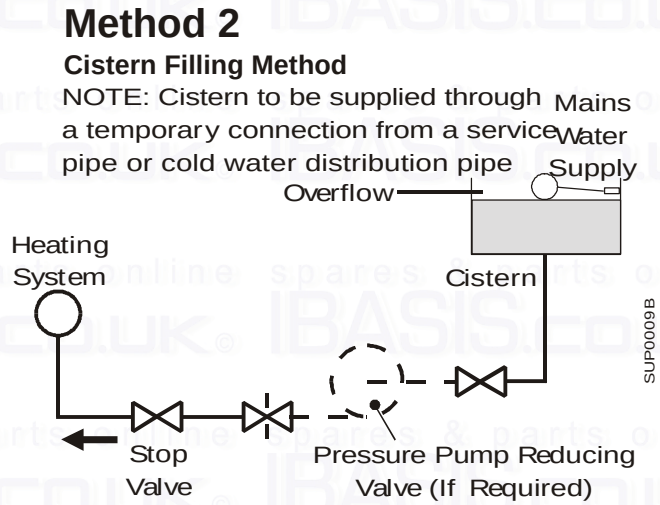

Circulation Pump Selection

The resistance through the heat exchanger when operating with a water flow rate producing an 11°C temperature rise at maximum boiler output are shown in the table. If other controls such as three position valves are used in the system, the resistance through them, quoted in their manufacturers literature must be taken into account. The pump may be fitted on either the flow or return and MUST be wired directly to the boiler terminal block. It must be fitted with two isolating valves which are positioned as close to the pump as possible. Closing of any valve must always leave the open vent unobstructed.

	Water Flow Rate	Boiler Resistance	
	l/min	mbar	m
100	37.4	147.0	1.5

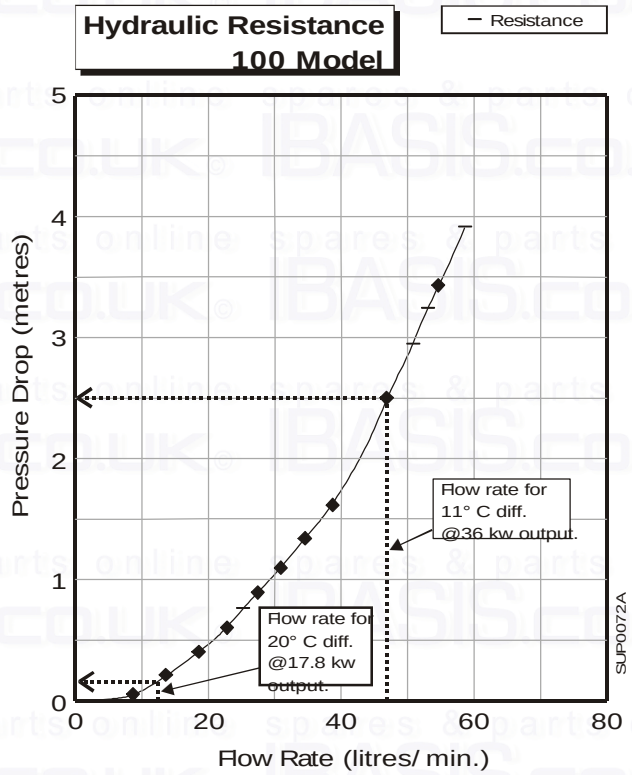

Installation instructions included as necessary with each kit.

Concentric Vertical Flue Kit: Sales Code: SUPKITD

A) Terminal Assy.

B) Terminal Clamp Bracket

C) Air Tube Adaptor

D) Product Tube Adaptor

E) Ceiling Seal

F) Ceiling Template

G) Adaptor

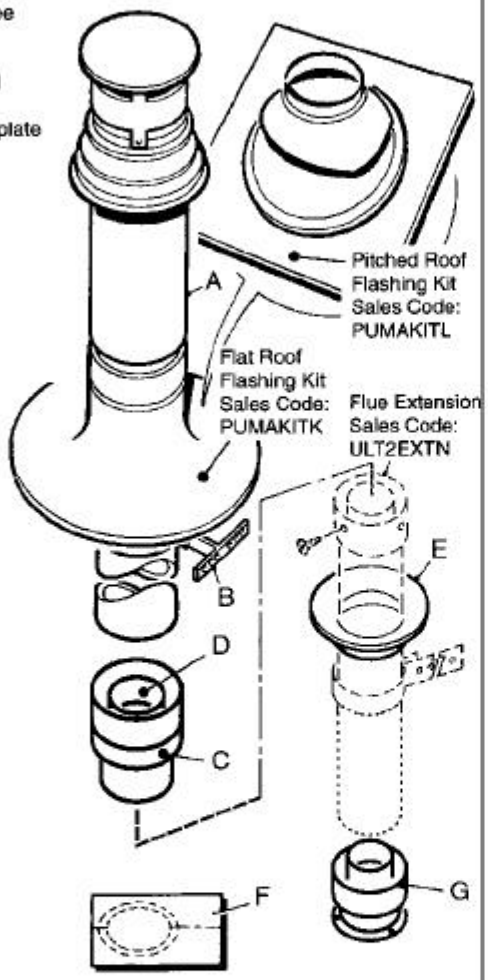

Telescopic Horizontal Flue Kit: Sales Code: 1SUPFLUE (up to 300mm) Standard

Sales Code: 2SUPFLUE (up to 550mm) Alternative

A) Telescopic Flue Assy. (Including Terminal)

B) Drip Ring

C) Fixings Bag (Including Securing Screws & Tape)

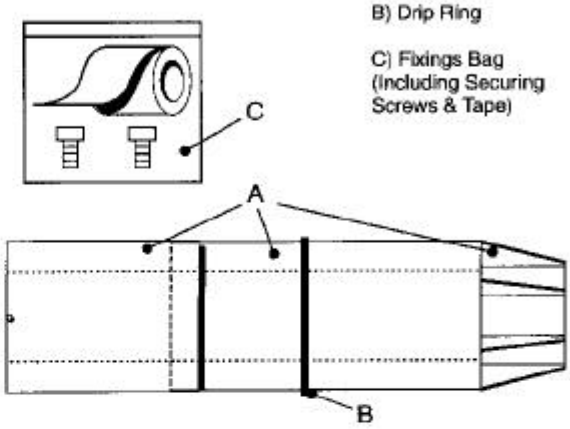

Flat Roof Flashing Sales Code: PUMAKITK

Pitched Roof Flashing Sales Code: PUMAKITL

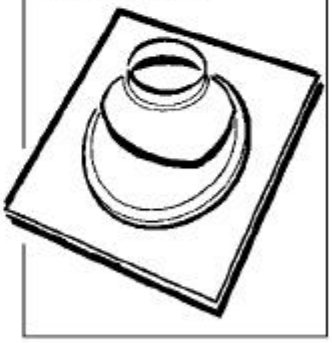

Internal Fitment Kit Sales Code: SUPKITA

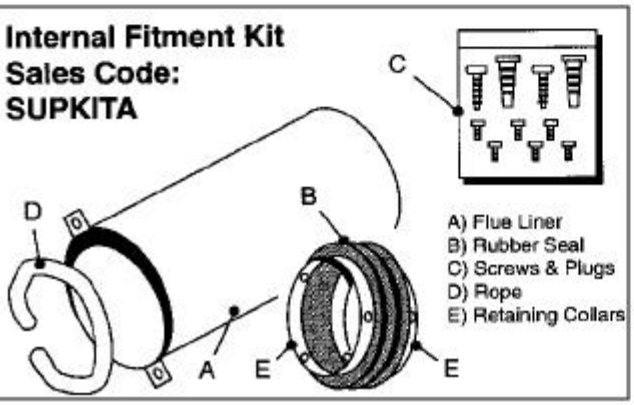

A) Flue Liner
B) Rubber Seal
C) Screws & Plugs
D) Rope
E) Retaining Collars

Terminal Guard Sales Code: PTERMGUARDEF

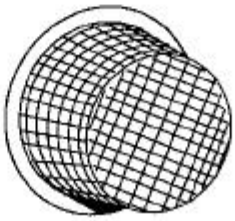

Wall Plate Pack: Sales Code: SUPKITB

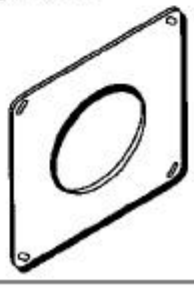

spares & parts online IBASIS.CO.UK

Installation instructions included as necessary with each kit.

Flue Turret Cover
Sales Code:
SUPFITI

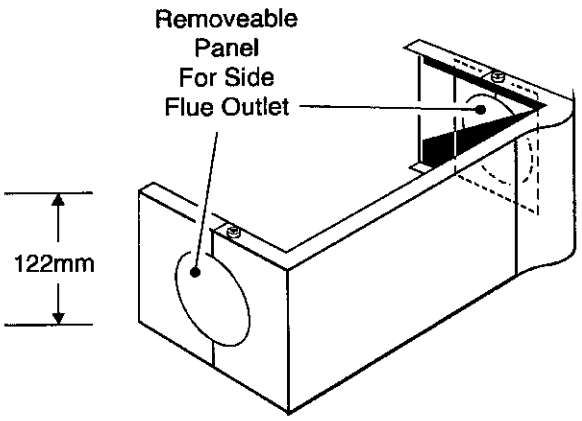

Boiler Stand Off Kit
Sales Code:
SUPKITJ

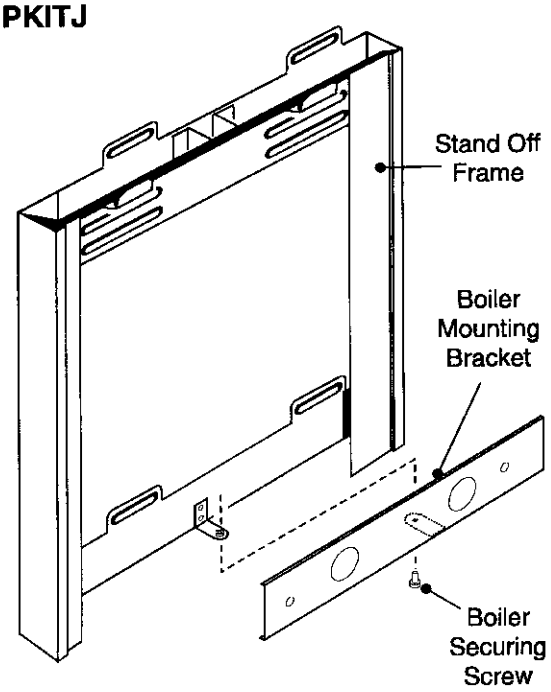

Programmer Kit
Sales Code:
SUPKITH

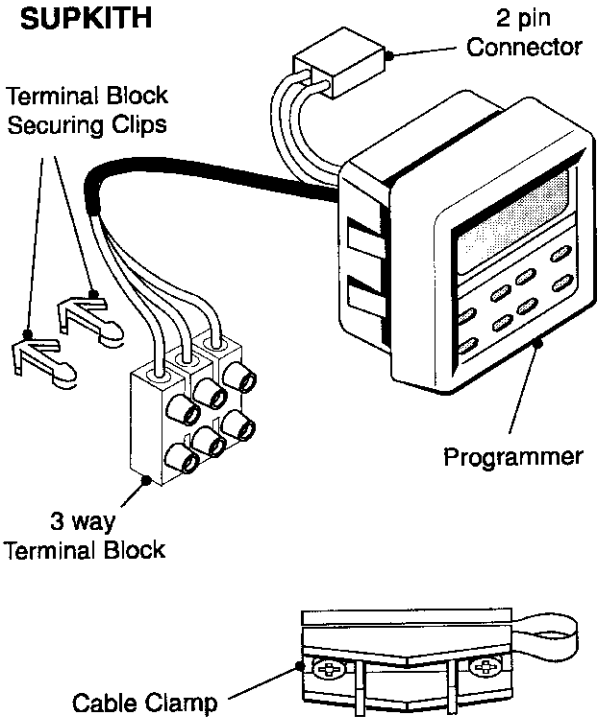

Anti-theft Kit
Sales Code:
SUPKITP

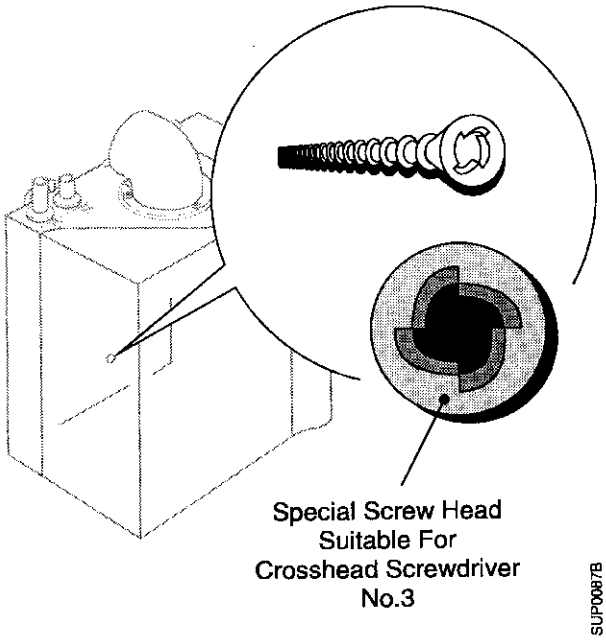

spares & parts online IBASIS.CO.UK JK

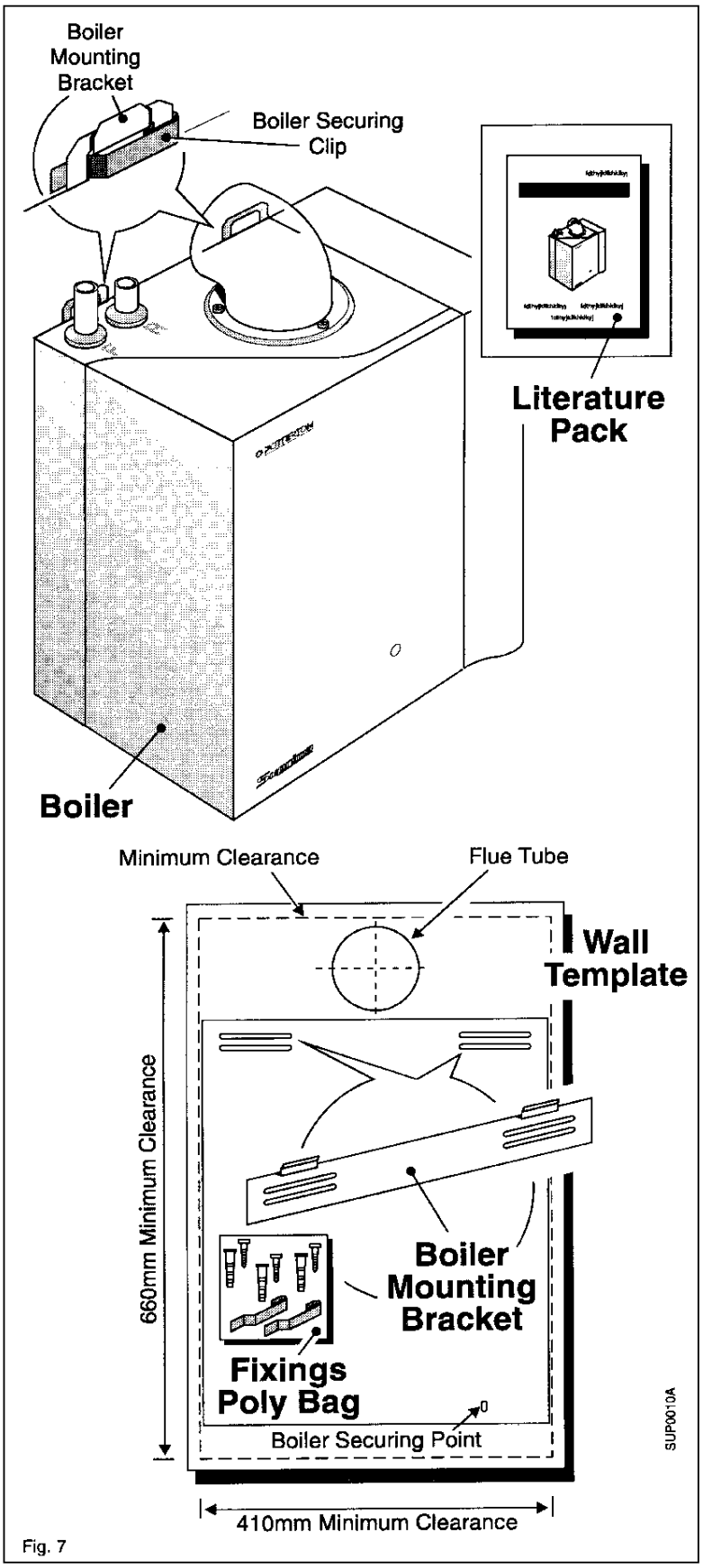

Fig. 7

2.1 Unpack & Prepare the Boiler

These instructions assume you have decided on where the boiler will be located and the type of flue system to be used.

1. Carefully unpack the boiler.
2. Do not discard any packaging until all the items are accounted for.
3. Open the controls cover, remove the securing screw and washer, pull off the controls cover and put safely aside.
4. Remove two screws and washers, remove the white front case and put safely aside.
5. Place the mounting template in the proposed boiler position ensuring that it is level. Minimum clearances are accounted for on the template.
6. Mark the flue hole, remove the template and carefully cut the flue hole through the wall. See fig.8 for Side Flue.
7. Place the mounting template centrally over the hole (ensure the template is level) and mark out the two screw fixing hole positions.
8. Remove the template and drill the two holes using a 7mm drill.
9. Insert wall plugs and secure the mounting bracket to the wall using three No. 12 x 2" woodscrews.
10. Lift the boiler onto the mounting bracket, slide both boiler securing clips over the mounting bracket (this prevents the boiler from being accidently lifted off the the mounting bracket), see fig.7.
11. The third screw provided is also to prevent the boiler from being lifted off the mounting bracket, once the boiler is mounted on the wall. This screw can be replaced by an anti-theft kit see note below.

Note: There is provision for an anti-theft securing point (sales code: SUPKITP) which may be used if required.

spares & parts online IBASIS.CO.UK

2.2 Install the Flue

Maximum flue lengths are as follows:
100 Model - 680mm

Note: For flue lengths less than the minimum telescopic length, the tubes can be cut to suit. Ensure that the same length is removed from the inner and outer tubes to maintain a 20mm overlap (minimum).
These instructions are for rear and side flue applications.

Rear Flue

1. Measure the wall thickness and add 66mm (or 106mm for installations using the System Boiler or Stand Off Kits).

Side Flue

1. Determine the X dimension (wall thickness + distance to boiler centreline).

For both Rear & Side Flues

2. Extend the telescopic flue to the required length, minimum 20mm overlap.
3. Drill through the pilot hole and secure with self tapping screw.
4. Wrap tape around the joint on the outer duct to seal the flue, slide drip ring into a position to coincide with the air gap in the wall (cavity wall) .
5. Slide the flue through the hole until it stops on the pin.
6. The boiler is supplied with the flue elbow set to the rear. For side outlet slacken the screws and turn the elbow to the required position and re-tighten screws. Ensure that the seals are still correctly located.
7. Hang the boiler onto the mounting bracket. To square the boiler to the wall adjust the boiler alignment screws on the back panel of the boiler.
8. Slide the flue back until it engages in the elbow bayonet connection, twist anti-clockwise to lock.
9. Drill through pilot hole and lock flue in position with the self tapping screw provided.
10. Make good the wall around the flue, both outside and inside.

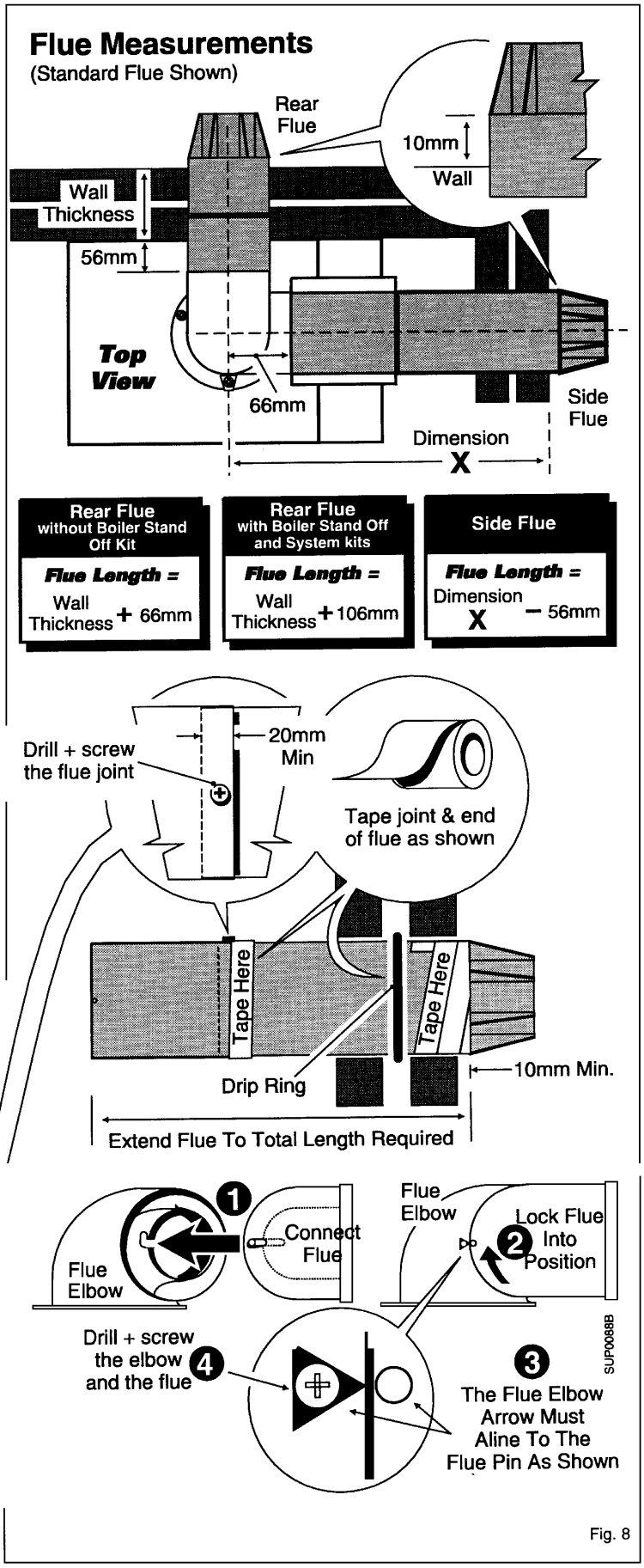

Fig. 8

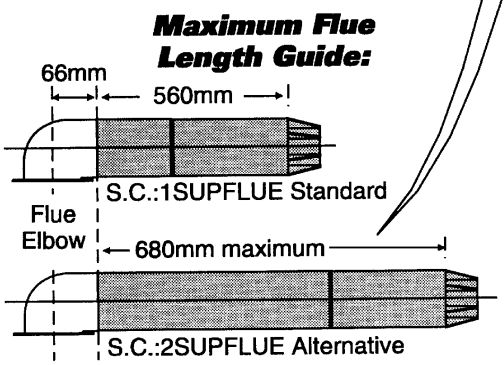

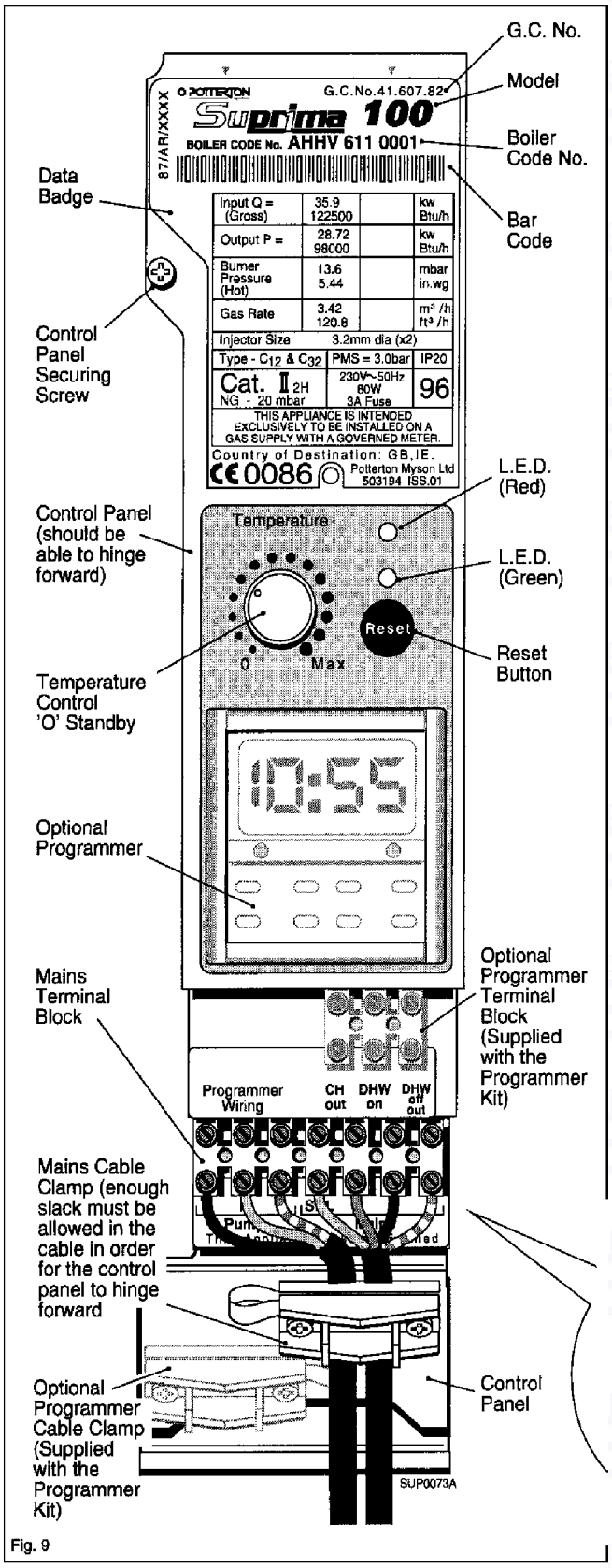

Fig. 9

2.3 Connect the Power Supply Cable

1. Cable clamping is provided on the front of the controls panel. Feed the cables up and over the back of the chassis, through the clamp and into the terminal connection. Connect the wires, brown to L and blue to N and green/yellow to earth .(⏚).

   Note: When connecting the power supply cable, ensure that the length of the earth wire is such, that if the power supply cable pulls out of the cable clamp the live and neutral wires become taut before the earth wire.

2. The pump wiring should be routed through the hole in the base of the rear cover, through the cable clamp and connected to the terminal connection.
3. Take up excess slack in the cables between the terminal block and the cable clamp, then tighten the cable clamp screws.
   Ensure sufficient slack is available to the cable clamps to allow the control panel to hinge freely. Check by opening the control panel.
   If fitting the optional Potterton timer go to section 2.4 before performing steps 4 and 5 below.
4. Secure the controls assembly to the chassis using the screw previously removed.
5. Carry out preliminary electrical system checks i.e. Earth Continuity, Short Circuit, Polarity and Resistance to Earth.

   Frost Thermostat:
   If a Frost Thermostat is to be fitted, the connections should be made in the wiring external to the boiler.
   The Frost Thermostat should be connected between the Permanent Live & Switch Live in the supply cable to the boiler.

   Do not switch on the electricity supply at this stage.

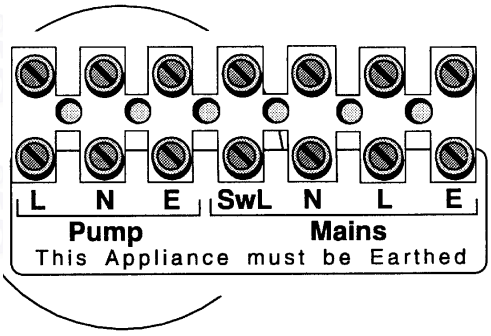

2.4 Install the Optional Programmer

1. Carefully remove the blanking panel from the facia and locate the programmer into the cut out.
2. Remove the two plastic sleeves and connect the programmers electrical plug onto position J4 on the circuit board.
3. Connect the 3 way terminal block to the metal work immediately below the programmer using the two screws provided.

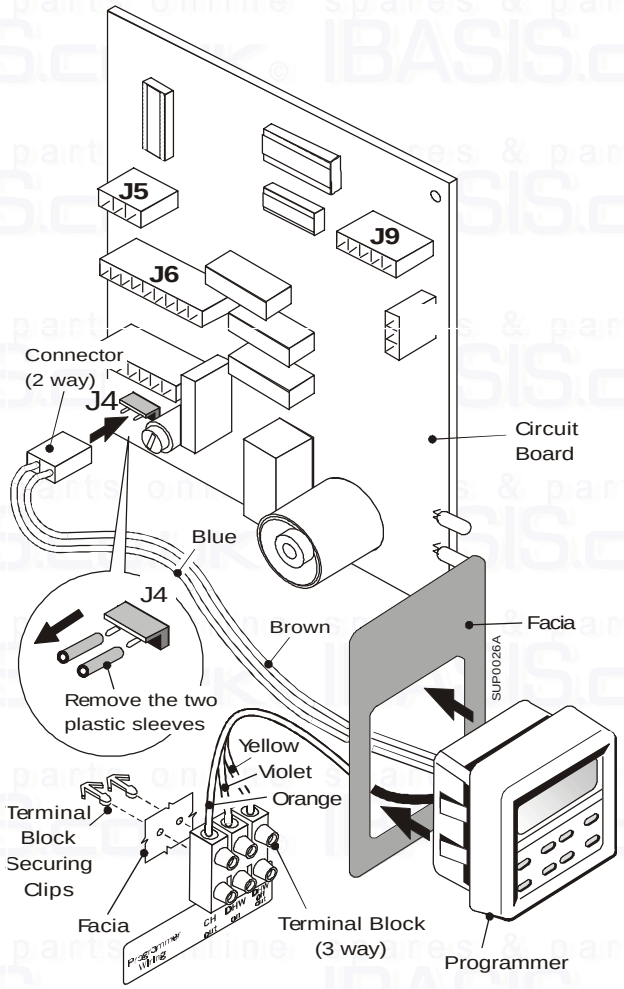

2.5 Connect the Gas Supply

Ensure that the gas supply is isolated. Connect the gas supply using a suitable adaptor to the gas cock.

Important:
Do not solder the fitting whilst assembled to the gas cock.

The pipe diameter required will depend on the boiler model and the pipe length from the gas meter. Ensure that the gas supply pipe is selected in accordance with BS 6891 so that an adequate gas supply to the boiler is provided.

Do not turn the gas supply on at this stage.

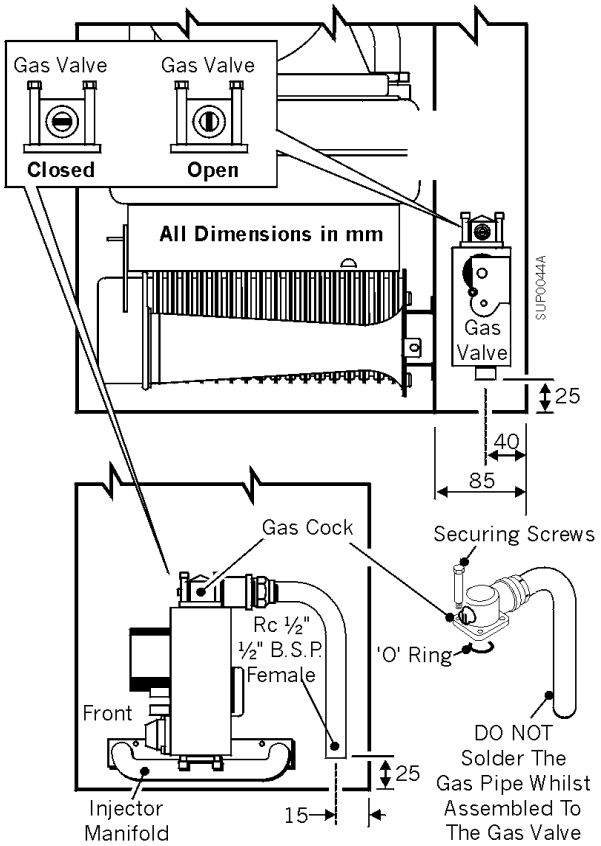

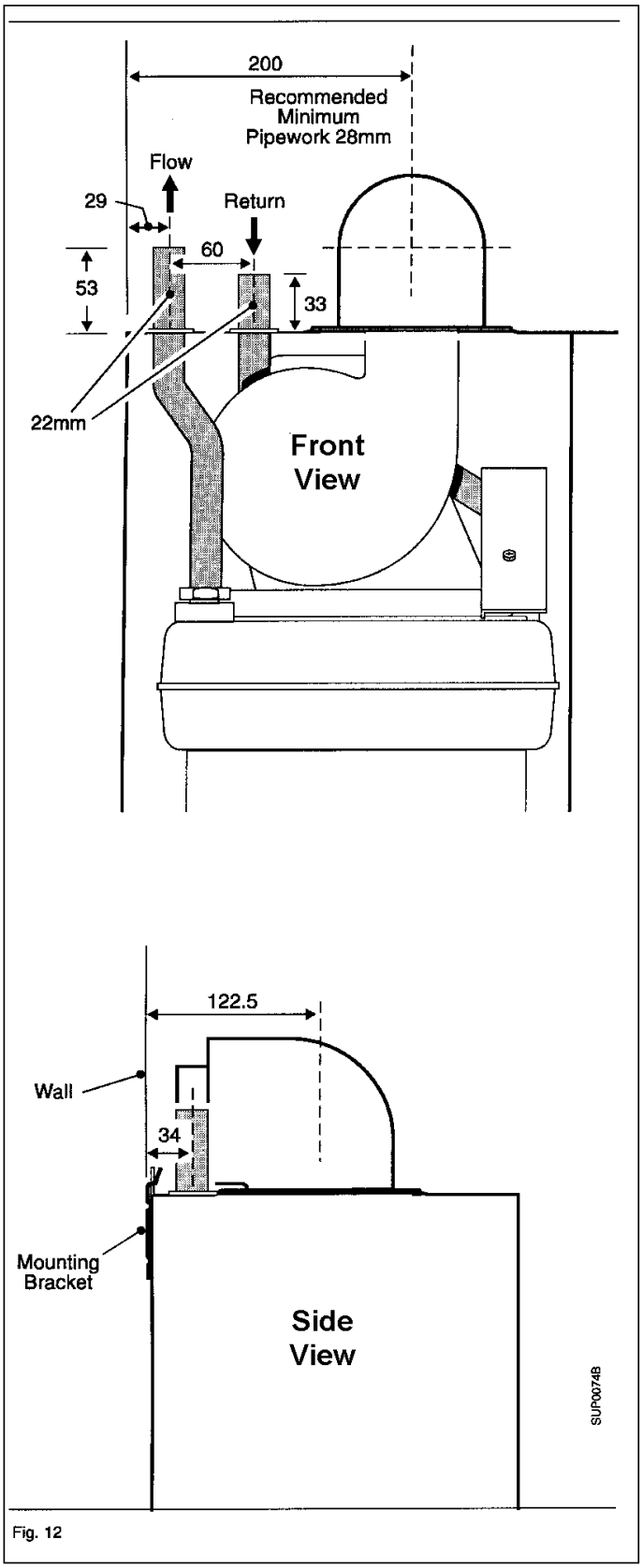

Fig. 12

2.6 Connect the Water System

1. Connect system pipework to the boiler, compression fittings should be used.

   Note: Drain off taps should be installed at the lowest points in the system.

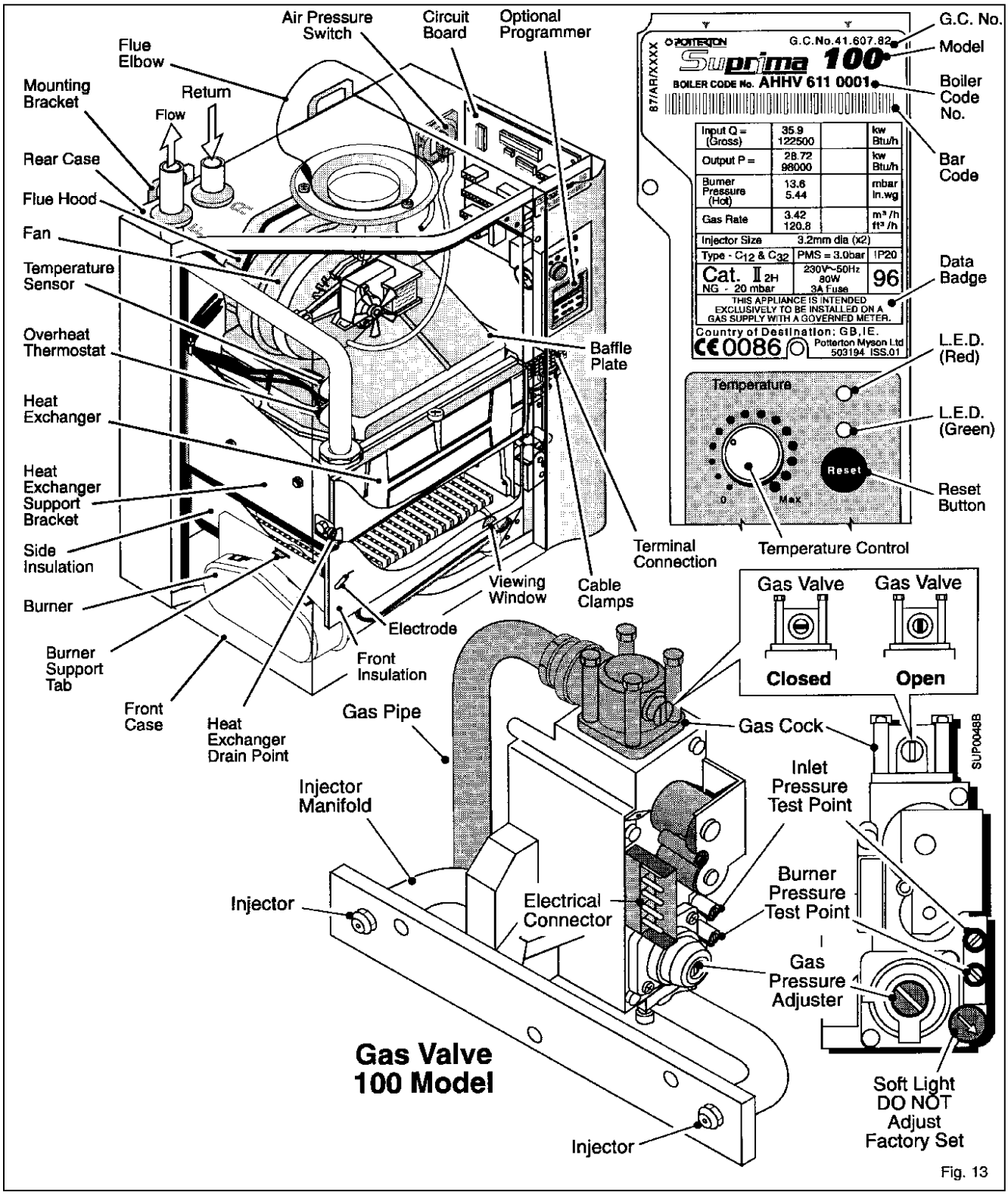

Fig. 13

Important
The Commissioning and boiler adjustment must only be carried out by a suitably qualified personnel. Potterton Myson Ltd. offer this service on a chargeable basis.

Important
When checking for gas soundness open all windows and doors in the room.
Extinguish all naked lights, cigarettes, pipes, etc.

3.1 Commission the Boiler

Open Vented Systems - Remove the pump and flush the system thoroughly with cold water. Re-fit the pump. Fill and vent the system then check for leaks.

Sealed Systems - Note: The system can be filled using a sealed system filler pump with a break tank or by any other method approved by the Local Water Authority. Remove the pump and flush the system thoroughly with cold water. Re-fit the pump. Fill and vent the system until the pressure gauge registers 1.5 bar (21.5 lbf/in²) and check for leaks. Raise the pressure until the safety valve lifts, this should occur within ± 0.3 bar of the preset lift pressure of 3 bar. Release water to attain the correct cold fill pressure.

All Systems

Warning: Before lighting the boiler, ensure that the outer white case has been correctly fitted and that the sealing strip fitted to the outer white case is forming a tight seal with the main boiler chassis. The controls cover is left off at this stage.

Preliminary electrical system checks. These checks must be carried out before attempting to light the boiler.

They are:- Earth Continuity, Short Circuit, Polarity & Resistance to Earth.

1) The whole of the gas installation must be checked for soundness and purged in accordance with BS 6891.

2) Set the boiler temperature control knob to 'O' Standby.

3) Turn the boiler gas service cock to the 'On' position and that the main gas supply is turned 'On'.

4) Make sure that the system is full of water and that the pump and radiator isolating valves are open. Vent air from the system.

5) Ensure that the main electricity supply is 'On'.

6) Check that the time control, if fitted, is in an 'On' position and that the room and cylinder thermostat, where fitted are set to high temperatures.

First time lighting:

7) Set the temperature control knob to its maximum setting.

The boiler will attempt to light, if the boiler does not light within 3 attempts (due to air in the system) the boiler controls will go to 'Lockout' and the upper Red LED on the control panel will go to a rapid flashing mode. To re-start the lighting sequence press the reset button on the control panel. There will be a short delay before the lighting sequence starts.

When the boiler burner flame has established and the burner lights the lower Green LED on the user control panel will be on continuously.

LED Indicators Status	Green LED	Red LED
Mains ON Only	OFF	ON
Ext. Call for Heat *(Boiler set to STNDBY Temp. Control set to 'O' Off)*	FLASHING 2 Per Sec.	ON
Ext. Call for Heat *(STNDBY switch to ON, Temp. Control set to Max.)*	FLASHING 2 Per Sec.	OFF
Ignition *(i.e. Gas and Sparks ON)*	FLASHING 16 Per Sec.	OFF
FLAME Detected	ON	OFF
Boiler Temperature Control Satisfied	FLASHING 2 Per Sec.	ON

8) With the main burner running, check for gas soundness using leak detection fluid.

9) Allow the system to reach maximum working temperature and examine for water leaks. Set the temperature control to 'Standby' and drain the system whilst still hot.

Note: Should the boiler fail to operate correctly refer to the Fault Finding Guide and the boiler wiring diagram for further information.

10) Re-fill and vent the system making a final check for leaks.

On sealed systems adjust to the correct cold fill pressure. Set the pressure gauge pointer to the system design pressure.
If a by-pass circuit is fitted the by-pass valve should be adjusted with the boiler operating under minimum load conditions to maintain sufficient water flow through the boiler to ensure that the overheat thermostat does not operate under normal conditions.

If the boiler fails to operate

Check the LED indicator fault modes below and refer to fault finding guide and boiler wiring diagram.

LED Indicators Fault Modes Status	Green LED	Red LED
Blocking - Mains Frequency incorrect or Air Switch **Fault** > 1 min. or **Reset** button held in to force a restart	ON	FLASHING 2 Per Sec.
Earth Fault or **Mains Reversal**	FLASHING 2 Per Sec.	FLASHING 2 Per Sec.
Lockout	OFF	FLASHING 2 Per Sec.

3.2 Final Adjustments

1) Use a pressure gauge to check the inlet and burner pressures. See the Data Badge for figures.

2) Turn the boiler on and allow to run for 10 minutes.

3) Check that the inlet pressure is 20mbar.

4) Check that the burner pressure is in accordance with the information on the boiler data badge.

5) If burner pressure adjustment is required turn the pressure adjusting screw anti - clockwise to increase pressure or clockwise to decrease.

6) Check at the gas meter that the gas rate is correct.

7) Shut down the boiler, remove the pressure gauges, re- fit the screws and check for gas soundness.

8) Stick the self adhesive arrow (from the literature pack) onto the data badge to indicate the appropriate burner setting pressure

9) Re-fit the controls cover and secure with the screw previously removed.

Control Thermostat

At its minimum and maximum settings, the thermostat should control the water flow temperature at approximately 57°C - 82°C.

Set the temperature control knob to 'O' Standby and check that the main burner shuts down.

Overheat Thermostat

The overheat thermostat is pre-set and no adjustment is possible. It will require manual re-setting if an overheat condition occurs (the LED will go to flashing Red).

The re-set button is located on the controls assembly.

Other Boiler Controls

No further setting or checking is necessary as all boiler mounted controls are designed so that if a fault should occur they will fail safe.

External Controls

Check that any other external controls connected in the system, such as clocks or thermostats, control the boiler as required.

3.3 Instruct the User

On completion of the installation, the installer should demonstrate the operation of the boiler and its associated controls. Also hand over all the instructions.

3.4 Advise the User

1. If a timer is fitted, set the time and programme the required settings. For a wall mounted programmer, see separate programmer instructions. For the Suprima timer, see the timer Instructions for Use fitted to the controls cover door.

2. Hand the Instructions for Use, these Installation & Service Instructions (and the programmer instructions) to the User and instruct in the safe operation of the boiler and controls.

3. Advise the User of the precautions necessary to prevent damage to the system and to the building in the event of the system remaining inoperative during frost conditions.

4. Advise the User that for continued efficient and safe operation of the boiler it is important that adequate servicing is carried out at least once a year by a Potterton Myson Service Engineer, the local Gas Region or a C.O.R.G.I. Registered Installer.

5. Leave a permanent card attached to the boiler giving:

   a. Name and address of installer.

   b. Date of installation.

   c. A wiring diagram of the external control circuit.

4. To Service the Boiler & Component Replacement - Page 22

To ensure continued efficient operation of the appliance, it is recommended that it is checked and cleaned as necessary at regular intervals.

The frequency of servicing will depend upon the particular installation conditions and usage but in general once per year should be adequate.

It is the law that any service work must be carried out by a competent person who is C.O.R.G.I. Registered.

Before servicing, fire the appliance and check that the flames are blue.
Yellow flame and excessive lifting indicate poor combustion.

WARNING
Before commencing work turn the temperature control knob to 'O' Off and allow the appliance to cool, isolate the electricity supply.

If the gas valve is to be removed turn off the gas supply at the appliance service cock.

IMPORTANT
Always test for gas soundness after completing any servicing of gas carrying components and carry out functional checks of controls.

IMPORTANT
Ensure that the outer white case is correctly fitted and that the sealing strip fitted to the door is forming a tight seal with the boiler casing.

Notes on Cleaning Boiler Components

Heat Exchanger
Place a sheet of paper under the heat exchanger then using a flat blade tool (Part No. 907736), scrape the flueway fin surfaces in a downward movement. This will ensure that most of the deposits will be collected on the paper.

Burner
Brush the burner top and check that the flame ports are clear. Any blockage may be removed with a fine wire brush. Turn the burner upside down and tap gently to remove any debris (Protect the electrode).

Electrode
If the electrode requires cleaning wipe the surface using a solvent.

Main Injectors
Omit this operation if the gas rate is correct, otherwise clean by blowing through. Do NOT clear the injector with a pin or wire.

Fan Assembly
Examine the fan impellor and carefully clean if necessary.

Flue
Inspect the flue terminal and flue/air tube for blockage and integrity, rectify if necessary.

4.1 General Access

Warning: Before starting work, open the controls cover and set the temperature control knob to 'O' Off. Isolate the electricity supply and if a gas carrying component is to be removed, isolate the gas supply at the appliance service cock. Allow the boiler to cool.

Important: Always test for gas soundness after completing any exchange of gas carrying components and carry out a functional check of the controls.

Re-assemble all parts in reverse order.

1. Remove the securing screw and slide off the controls cover. Put safely aside.

To complete sections 4.3.3 to 4.3.11 perform the following:-

2. Remove the two screws securing the outer white case to the chassis. Hinge forward, pull bottom of cover forward and lift off. Put safely aside.

3. Remove the screw securing the combustion chamber front to the heat exchanger and the two side screws, remove the panel.

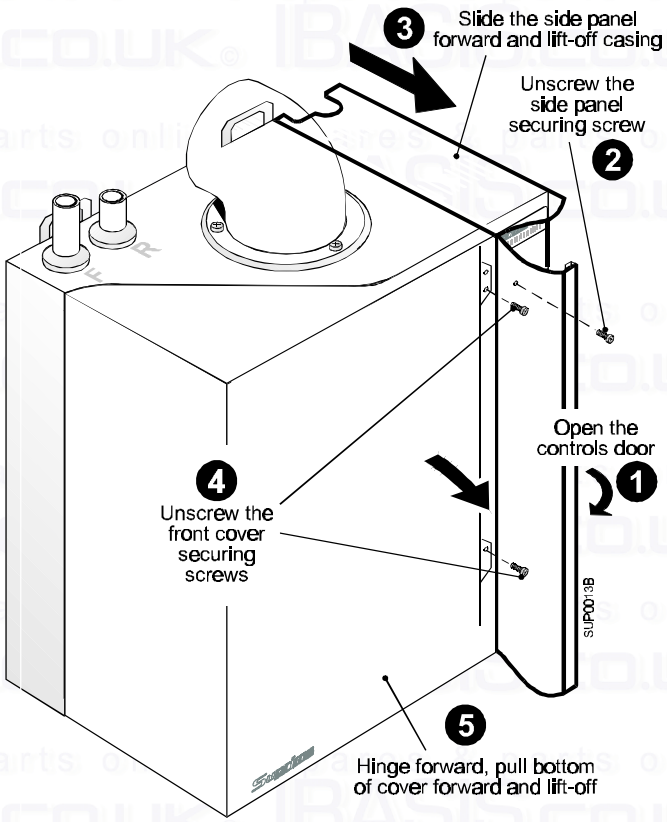

4.2 To Service the Boiler

1. Loosen the baffle plate securing screw and remove the baffle plate. Disconnect the tube from the front of the fan housing.

2. Disconnect the 4 wires from the fan motor, at the in-line 4 way connector.

3. Remove the two screws securing the fan to the flue hood. Carefully pull the fan down and away from the flue hood.

4. Remove the flue hood.

5. Disconnect the electrode and earth wire.

6. Undo the fixing screw, hold the burner at the right hand side and pull forward to disconnect from the box.

If necessary, remove the injector as follows:-

7. Undo the two screws securing the side and rear insulation assembly on the front of the chassis. Pull the assembly forward and away from the boiler.

8. If the injectors are removed use a new sealing washer when re-fitting each injector.

The heat exchanger, burner and fan can now be inspected. If deposits have formed on these items and on ancillary components clean as detailed in the notes at the start of this section.

The boiler can be re-assembled in reverse order. Refit baffle plate and ensure that any electrical connections are in place and that any damaged seals or insulation are replaced before re-fitting the controls cover.

Check the gas pressure, refer to Section 3 'Commissioning'.

Other Components

No other servicing is required on any other boiler component.

4.3 Component Replacement (see over page)

Warning

Before attempting to remove any component from the appliance first disconnect the mains electricity supply by removing the plug from the wall socket or by switching off the appliance at the external isolating switch.

Notes

The 'O' (off) position on the boiler temperature control will leave parts of the boiler Live.

If the appliance gas valve is to be removed it will be necessary to isolate the gas supply at the appliance isolating valve.

Important

After removal or replacement of any gas carrying component a test for gas soundness must be made and functional check of the controls carried out.

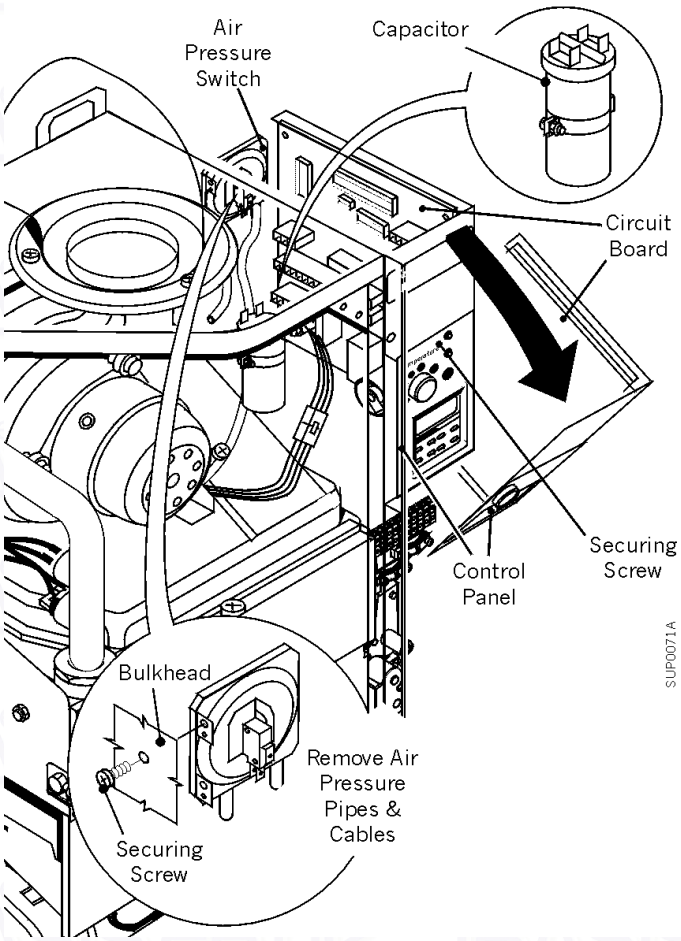

4.3.1 Electronic Control Board

Gain General Access - See 4.1

1. Remove the securing screw and allow the control panel to pivot forwards.
2. Disconnect all connectors and wires, unscrew the four securing screws and remove the board.
3. On re-assembly refer to the wiring diagram when re-connecting wires and connectors.

4.3.2 Air Pressure Switch

Gain General Access - See 4.1

1. Remove the securing screw and allow the control panel to pivot forwards.
2. Note the wire connections and disconnect the wires to the air pressure switch.
3. Remove the screw (access through the fan compartment) securing the air pressure switch to the chassis.
4. Re-assemble in reverse order, ensure that the Normally Closed (N.C) terminal is shrouded.

4.3.3 Electrode

Gain General Access - See 4.1

1. Pull the electrode lead off the electrode, remove the securing screw and remove the electrode.
2. On re-assembly check the gap between the electrode tip and the burner face. It should be 3 - 4mm. If required adjustment can be made by careful use of pliers.

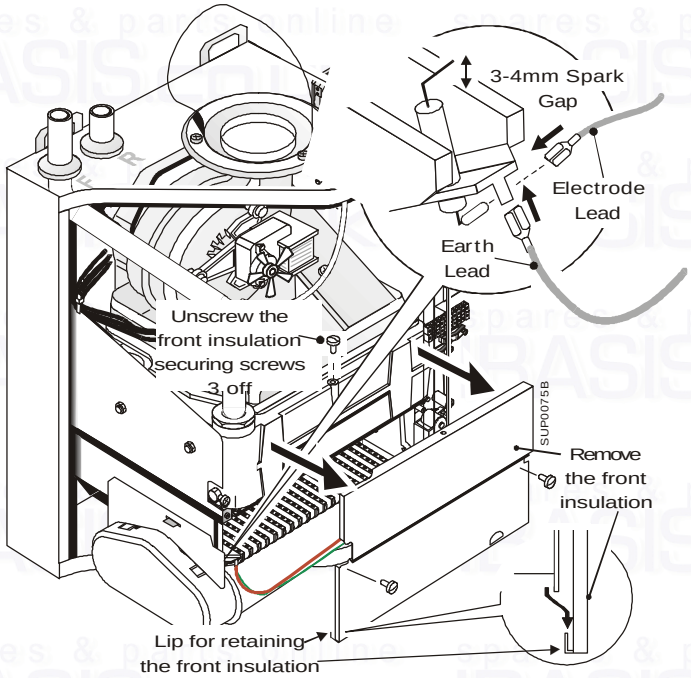

4.3.4 Burner

Gain General Access - See 4.1

1. Disconnect the electrode lead and earth wire.
2. Undo the fixing screw, hold the burner at the right hand side. Pull forwards and to the left, disconnect from the air box and support tab.
3. Unscrew the electrode and transfer to the new burner.
4. Re-assemble in reverse order.
   Locate the left hand side of the burner onto the support tab on the side insulation. Hook the rear of the locating bracket (2) in place before locating the front (3) and re-fitting the screw.

4.3.5 Combustion Chamber Insulation

Gain General Access - See 4.1

1. The front insulation is accessible as the front is already off.
2. Remove the burner - See 4.3.4.
3. Remove the two screws securing the side and rear insulation assembly to the front of the chassis.
4. Pull the assembly forwards and away from the boiler. Replace insulation pieces as required, replace any securing clip if damaged.
5. Re-assemble in reverse order.

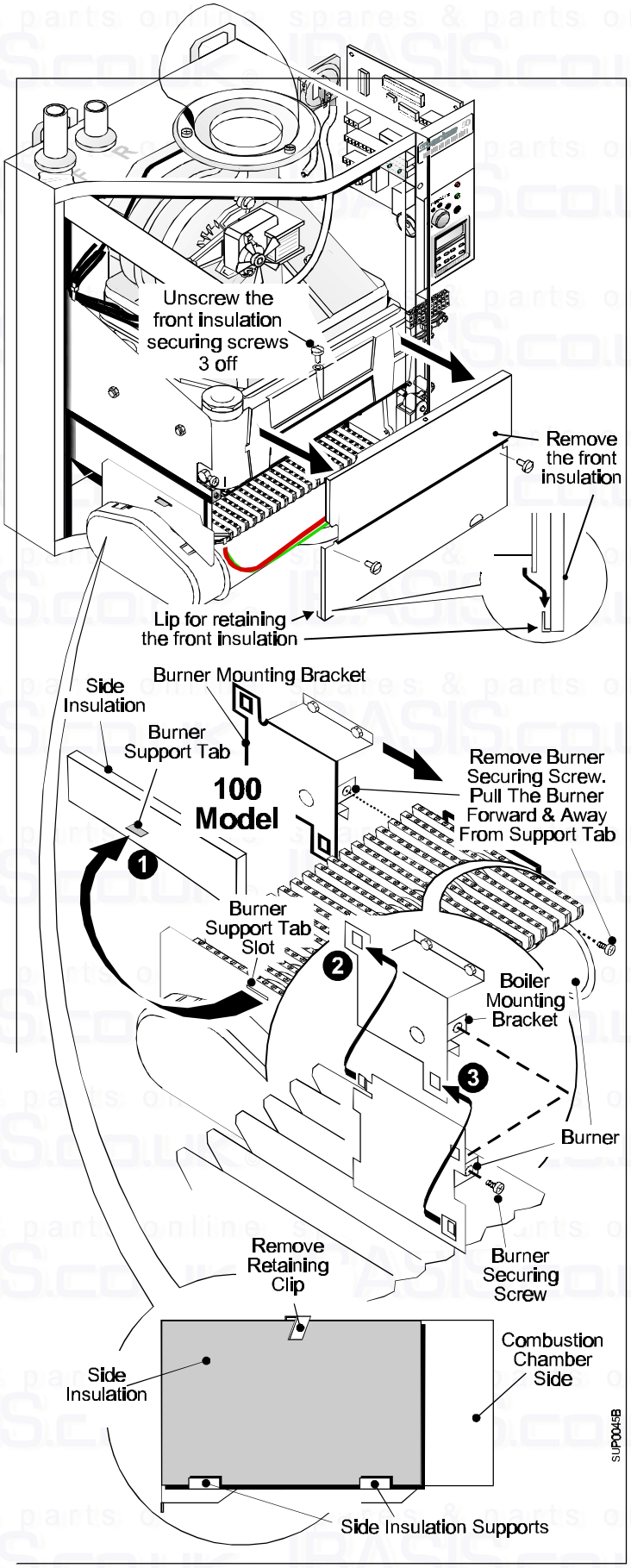

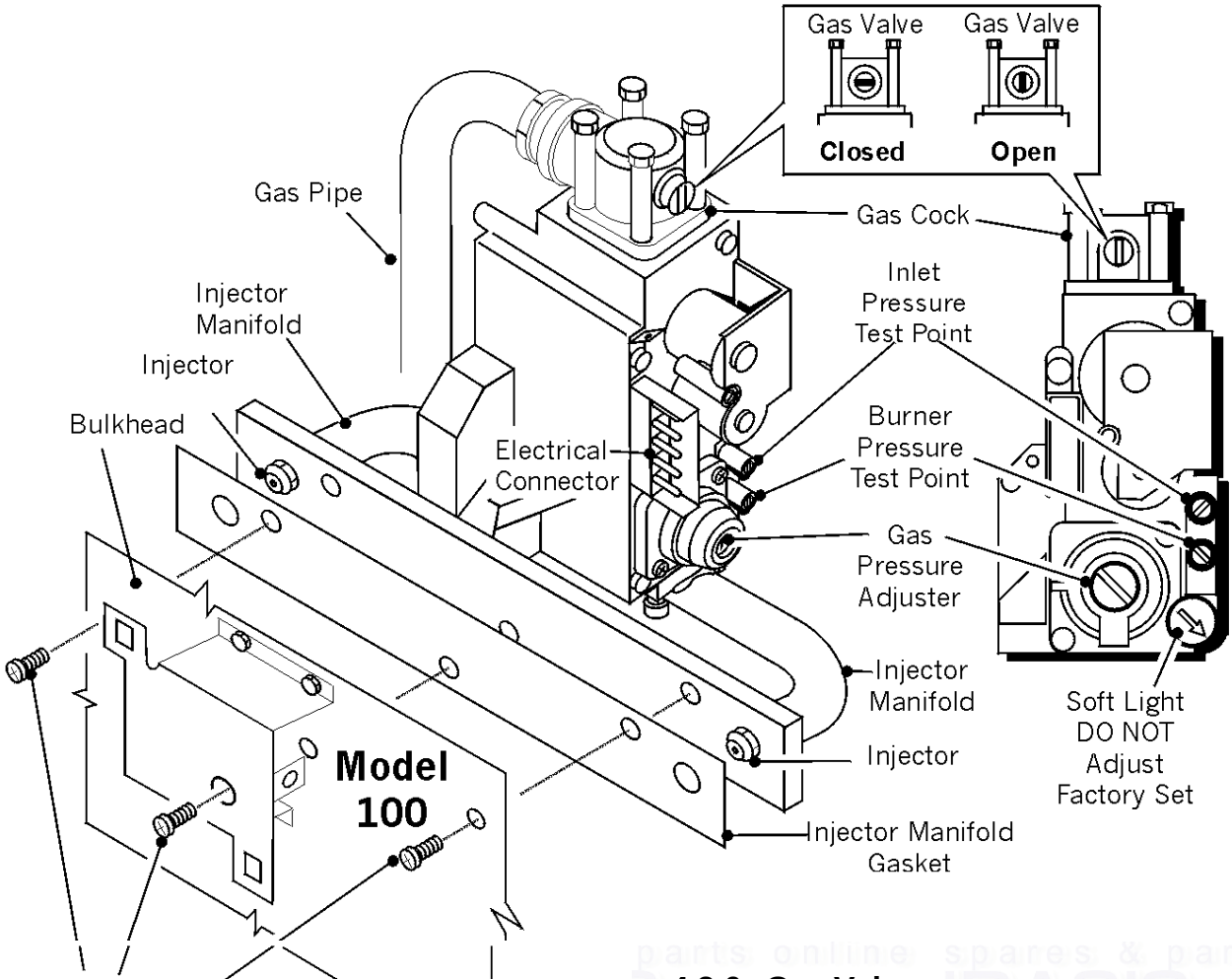

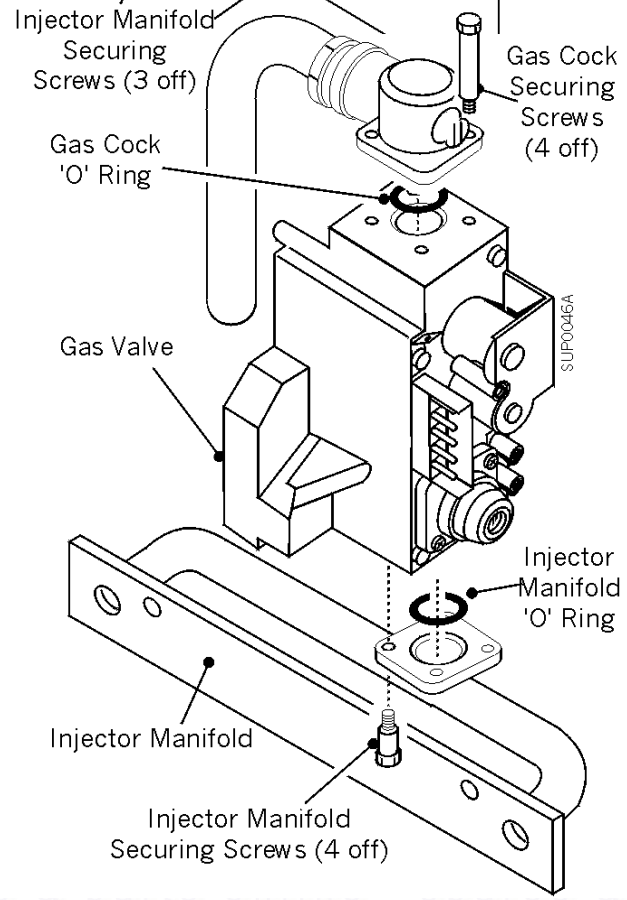

4.3.6 Gas Valve

Gain General Access - See 4.1

1. Turn gas cock OFF, see fig.17.
   Pull off the electrical connector at the valve.
2. Remove the gas cock by unscrewing the four long hexagonal head screws from the top of the valve.
3. Remove the burner - See 4.3.4.
4. Remove the two screws securing the side and rear insulation assembly to the front of the chassis and remove assembly.
5. Remove the three screws securing the gas valve manifold assembly to the chassis and remove the complete assembly.
6. Remove the four screws securing the gas manifold to the gas valve.
7. Use a new 'O' ring and refit the manifold to the new gas valve.
8. Re-assemble in reverse order, use a new 'O' ring in the gas cock and a new injector manifold gasket.

4.3.7 Injector

Gain General Access - See 4.1

1. Remove the burner - See 4.3.4.
2. Use a 13mm (A/F) or ½ (A/F) socket spanner to remove the injectors.
3. Unscrew the injector, use a new sealing washer on re-assembly.

4.3.8 Fan & Flue Hood

Gain General Access - See 4.1

1. Disconnect the tube from the front of the fan housing - note how it fits.
2. Disconnect the four wires from the fan motor, at the in-line 4 way connector.
   Loosen the baffle plate securing screw and remove the baffle plate.
3. Remove the two screws securing the fan to the flue hood.
4. Carefully pull the fan down and away from the boiler.
5. *Flue Hood:* On re-assembly ensure that the flue hood locates under the two brackets at the rear of the chassis. Check the seal and replace if damaged.
6. *Fan:* On re-assembly ensure that the rubber seal around the fan opening is located correctly into the base of the flue elbow.
7. Re-assemble in reverse order.

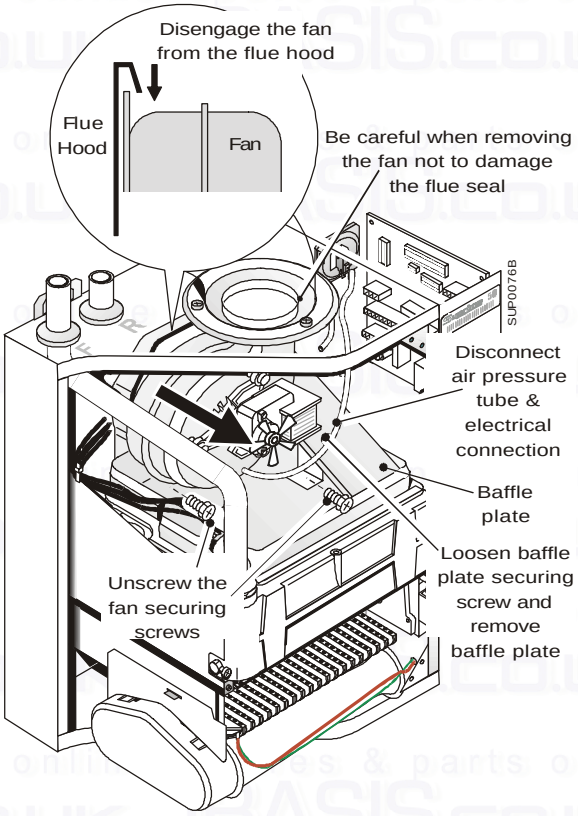

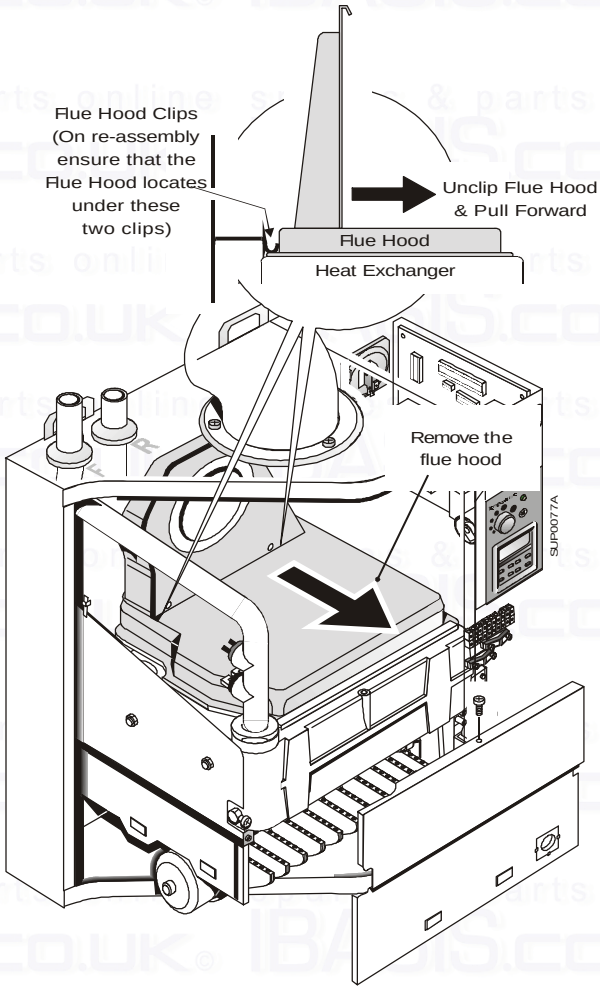

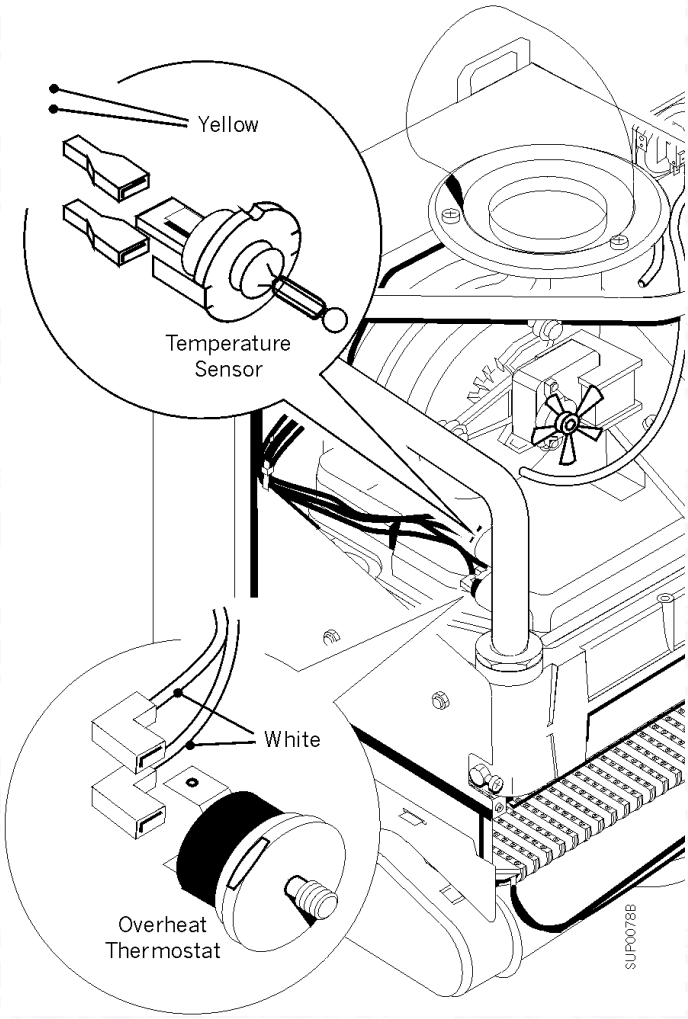

4.3.9 Temperature Sensor

Gain General Access - See 4.1

1. Disconnect the wires from the sensor.
2. Depress the clips on the outside of the sensor and pull it clear of the pipe.
3. Re-assemble in reverse order, use fresh conducting paste.

4.3.10 Overheat Thermostat

Gain General Access - See 4.1

1. Disconnect the wires from the thermostat.
2. Unscrew the thermostat.
3. Re-assemble in reverse order.

4.3.11 Heat Exchanger

Warning:
For Sealed Systems relieve system pressure through pressure relief valve before draining.

Gain General Access - See 4.1.

1. Drain the system at its lowest point.
2. Remove the fan and flue hood - See 4.3.8
3. Remove the burner - See 4.3.4.
4. Hold a suitable container under the left hand side of the heat exchanger and unscrew the drain screw. Drain the heat exchanger.
5. Remove the screws securing the combustion chamber insulation assembly to the chassis and withdraw it.
6. Release both the flow and return nuts at the top of the heat exchanger.
7. Support the heat exchanger, remove the four bolts (Two each side) and carefully remove the heat exchanger.
8. Replace rubber seals in flow and return ports, feed the new heat exchanger into position ensuring the pipe connections are correctly located.
9. Secure the heat exchanger with the four fixing screws and tighten the two sealing nuts.
10. Re-assemble in reverse order.

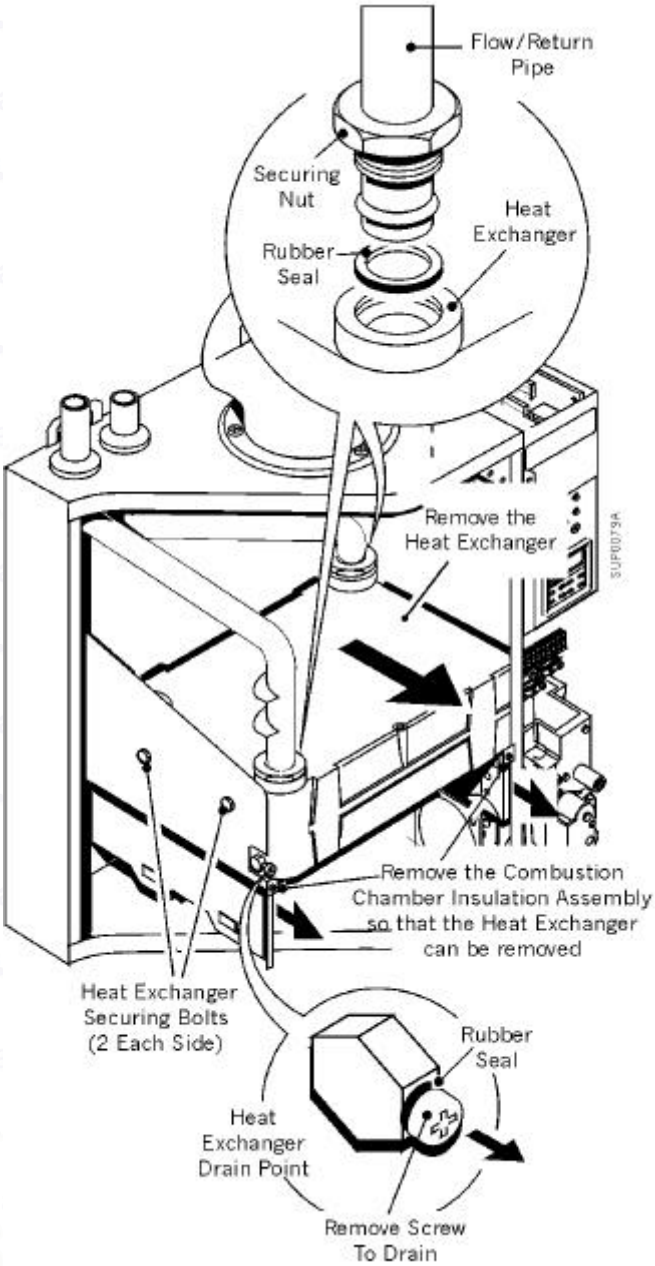

5. Functional Wiring Diagram

Boiler Lighting Sequence

1. Supply external voltage to boiler terminal connections L and N, 230 volts, 50 HZ.
2. Supply external voltage to boiler terminal connection, switch line SW 230 volts, 50 HZ.
3. Pump live from boiler energised, diverter/zone valves operate in accordance with system demand.
4. Boiler control checks, air pressure switch for "No Air Condition" (red light "On", green light "Flashing").
5. If "No Air" the control switches on the fan.
6. After ten seconds air pressure switch proves fan is on.
7. Gas valves open and ignition for 3 seconds (green light flashes rapidly).
8. Boiler firing (green light "On" only).
9. If the flame is not detected at this time, the boiler will turn off.
10. The above sequence will repeat for a further two ignition attempts before going to lockout (indicated by the red light flashing).
11. Pressing the reset button will re-start boiler at No. 1.
12. The control will continue to run the pump for several minutes after any firing of the boiler.
13. The control will run the pump automatically for a few minutes every twenty four hours to maintain the free running of the pump.
14. The standby position on the thermostat control knob will prevent the boiler firing but will permit operation of the pump for sequences 12 and 13.

Key Colours:

br = Brown	o = Orange
bk = Black	b = Blue
v = Violet	w = White
r = Red	g/ y = Green / Yellow
y = Yellow	g = Green

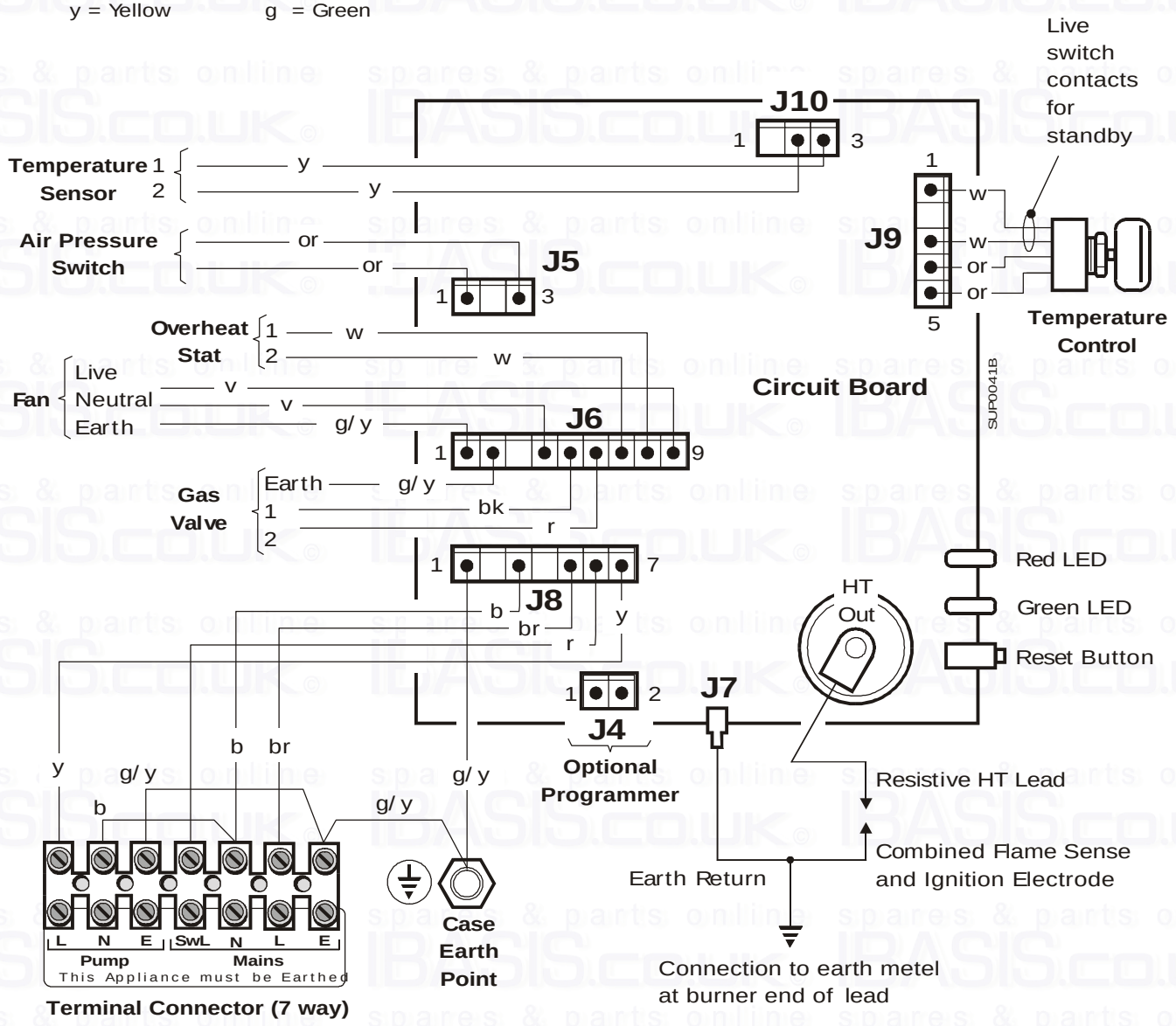

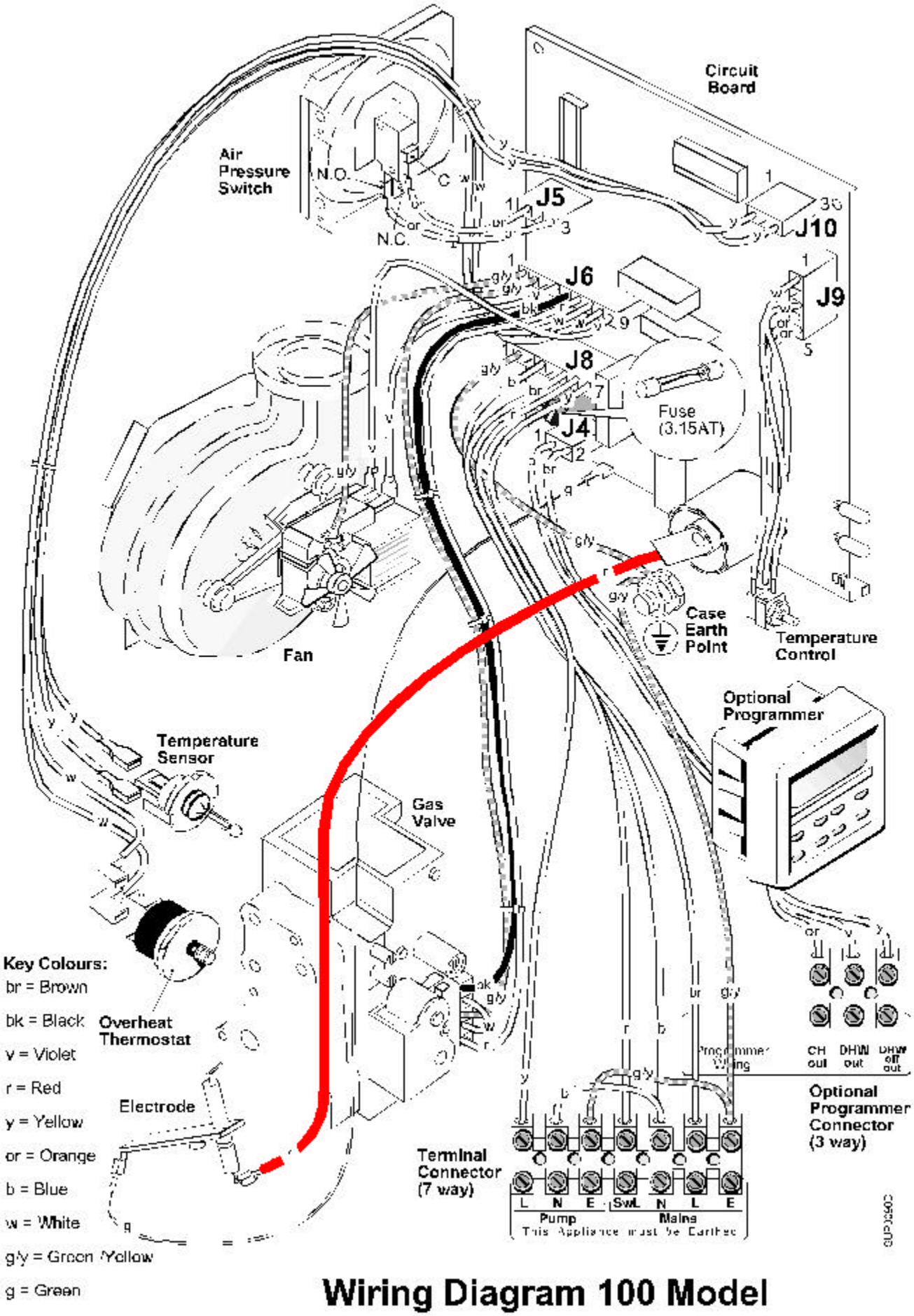

Wiring Diagram 100 Model

spares & parts online
IBASIS.CO.UK®

Fault Finding Guide For 100 Model

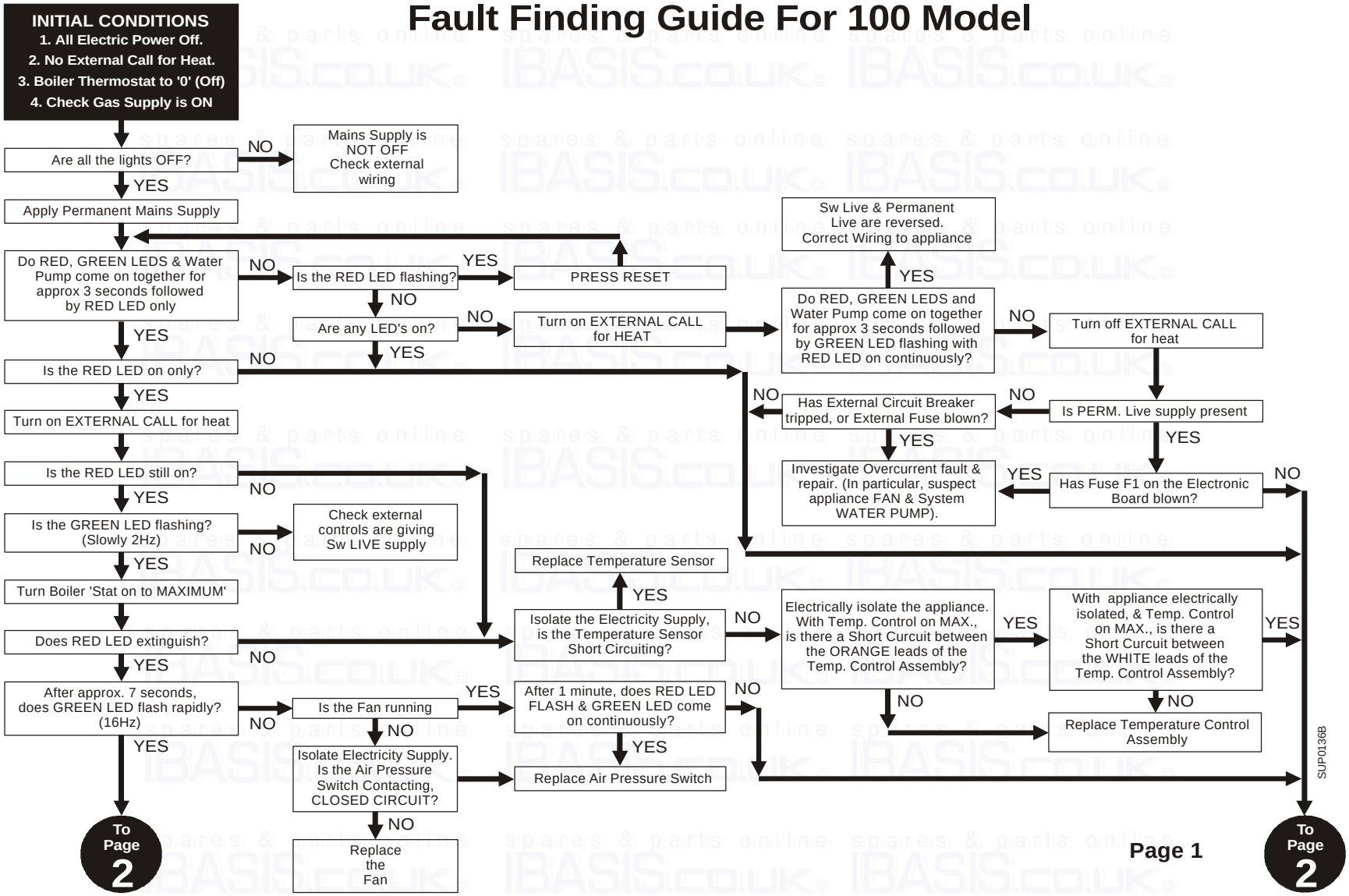

. Fault Finding Guide - Page 33

spares & parts online IBASIS.CO.UK®

Fault Finding Guide For 100 Model

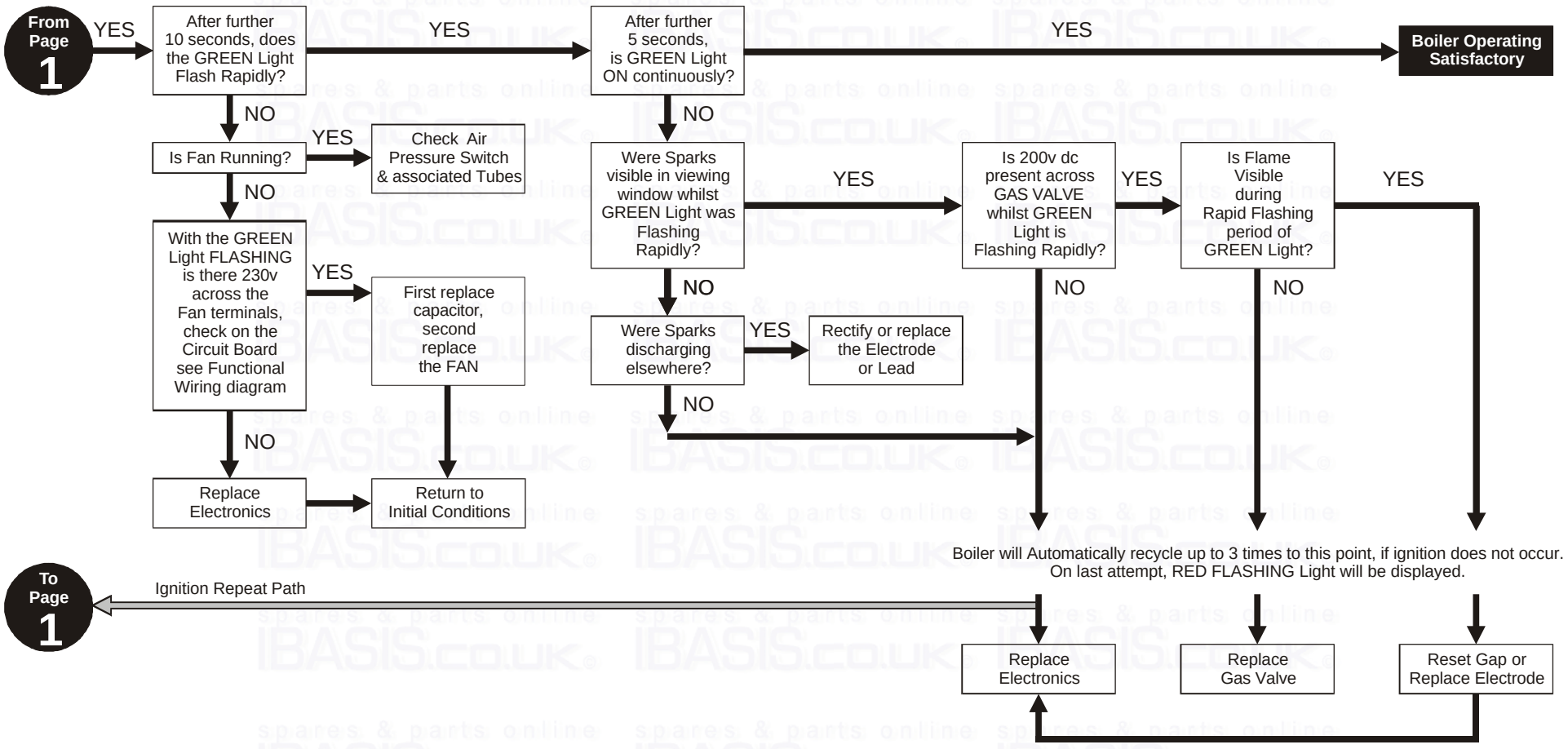

SUP0092A

spares & parts online
IBASIS.co.uk©

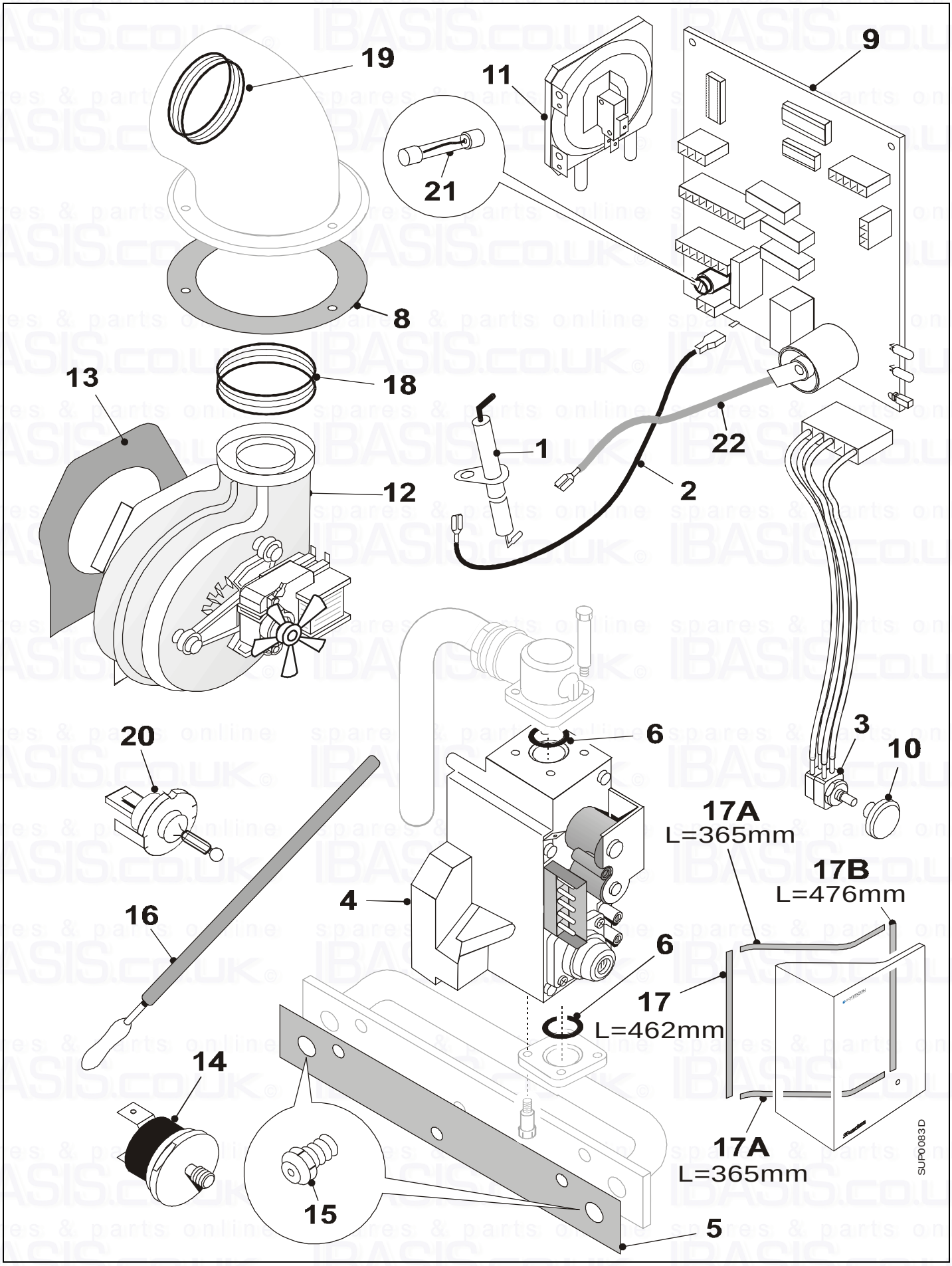

spares & parts online IBASIS.CO.UK

Short List of Spare Parts - Page 35

Drg. Ref.	G.C. No.	Description	Qty.	Part No.
1	114 982	Electrode	1	8407754
2	114 861	Earth Lead	1	8238269
3	114 863	Temperature Control	1	8933012
4	173 154	Gas Control Valve Kit	1	8402552
5	114 833	Injector Manifold Gasket - Case/Manifold	1	8238226
6	114 962	Manifold 'O' Rings - Gas Cock	1	8401648
8	114 945	Flue Elbow Seal	2	8238146
9	114 954	Circuit Board	1	8407750
10	114 864	Thermostat Knob	1	8238172
11	173 155	Pressure Switch - Honeywell	1	8642227
12		Fan Assembly - 100	1	409597
13	114 811	Fan Gasket	1	8238165
14	173 130	Overheat Thermostat	1	8404517
15	173 139	Injector - Main Burner - 100	2	8411028
16	337 862	Flue Scraper	1	907736
17	114 873	Front Panel Seal - Type 1	1	8650691
17a	114 874	Front Panel Seal - Type 2	2	8650692
17b	114 875	Front Panel Seal - Type 3		8650693
18	114 948	Fan Outlet Seal	1	8238147
19	114 949	Flue Tube/Elbow Seal	1	8238148
20	114 776	Temperature Sensor	1	8404516
21	114 983	Fuse (Type: 3.15AT)	1	8160038
22	114 859	Electrode Lead	1	8407756

Back Page

spares & parts online IBASIS.CO.UK