POTTERTON

Installation & Service Instructions

Suprima
30L - 100L

About the Boiler

See inside cover for models covered by these instructions.
This is a Wall Mounted Fan Assisted Balanced Flue Gas Boiler.
This boiler is for use with Natural Gas (G20) only at 20mbar and for use in GB & IE.

benchmark

The code of practice for the installation, commissioning & servicing of central heating systems

spares & parts online IBASIS.COUK

Contents

Technical Data.....3
Introduction.....4
1. Installation Requirements.....4
1.1 Health & Safety Information.....4
1.2 Codes of Practice.....4
1.3 Gas Supply.....5
1.4 Electricity Supply.....5
1.5 Location of Boiler.....5
1.6 Air Supply.....7
1.7 Flue Systems.....7
1.8 Flue Terminal Location.....8
1.9 The System.....9

2. Installation.....12
2.1 Unpack & Prepare the Boiler.....12
2.2 Install the Flue.....13
2.3 Connect the Power Supply Cable.....15
2.4 Install the Optional Programmer.....16
2.5 Connect the Gas Supply.....16
2.6 Connect the Water Supply.....17

3. Commissioning.....18
3.1 Commission the Boiler.....20
3.2 Final Adjustments.....21
3.3 Advise the User.....21

4. To Service the Boiler & Component Replacement.....22
4.1 General Access.....22
4.2 To Service the Boiler.....23
4.3 Component Replacement.....23
4.3.1 Electronic Control Board.....24
4.3.2 Air Pressure Switch.....24
4.3.3 Electrode.....25
4.3.4 Burner 30 - 80.....25
4.3.5 Injector 30 - 80.....25
4.3.6 Combustion Chamber Insulation 30 - 80.....25
4.3.7 Gas Valve 30 - 80.....26
4.3.8 Burner 100.....27
4.3.9 Combustion Chamber Insulation 100.....27
4.3.10 Gas Valve 100.....28
4.3.11 Injector s100.....29
4.3.12 Fan & Flue Hood.....29
4.3.13 Temperature Sensor.....30
4.3.14 Overheat Thermostat.....30
4.3.15 Heat Exchanger.....31

5. Functional Wiring Diagram.....32
6. Wiring Diagrams.....33
7. Fault Finding.....34
8. Short List of Spares.....36

Flue Kits.....38
System and Other Kits.....40

The models covered by these instructions are:-

Suprima 30L - G.C. No. 41 590 42
Suprima 40L - G.C. No. 41 590 43
Suprima 50L - G.C. No. 41 590 44
Suprima 60L - G.C. No. 41 590 45
Suprima 70L - G.C. No. 41 590 46
Suprima 80L - G.C. No. 41 590 47
Suprima 100L - G.C. No. 41 590 48

Potterton is a member of the Benchmark initiative and fully supports the aims of the programme. Benchmark has been introduced to improve the standards of installation and commissioning of central heating systems in the UK and to encourage the regular servicing of all central heating systems to ensure safety and efficiency.

Important – Failure to install and commission this appliance to manufacturer's instructions may invalidate the warranty. This note does not affect your statutory rights.

The boiler model and serial number are given on the boiler data label which is located on the right hand side of the chassis and visible after opening the controls door.

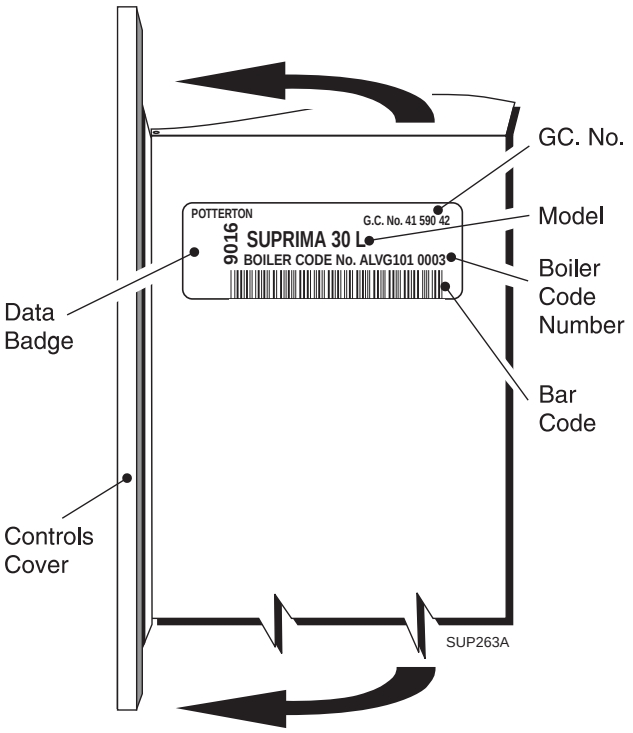

Technical Data

Nominal Boiler Ratings

Boiler models	Output kW	Output Btu/h	Input kW	Input Btu/h	Burner setting pressure mbar	Burner setting pressure in wg	Gas Rate m³/h	Gas Rate ft³/h	Injector Size mm dia.
30	8.8	30 000	11.0	37 500	9.3	3.70	1.05	37.1	2.8
40	11.7	40 000	14.7	50 000	11.2	4.50	1.40	49.3	3.1
50	14.7	50 000	18.3	62 500	10.3	4.10	1.75	61.8	3.5
60	17.6	60 000	22.0	75 000	9.2	3.70	2.10	74.2	3.9
70	20.5	70 000	25.6	87 500	13.4	5.35	2.45	86.4	3.9
80	23.4	80 000	29.3	100 000	13.9	5.56	2.80	98.7	4.1
100	28.7	98 000	35.9	122 500	13.6	5.54	3.42	120.9	3.2

Maximum Working Head Minimum Working Head	30.5 m (100 ft) 150 mm (6 in)
Gas Supply Pressure Gas Supply Connection	20 mbar Rc. ½ (½ in BSP Female) (30 - 80 models) 15 mm copper tail (100 model)
Maximum Flow Temperature Flow/Return Connections Water Content	82°C 22 mm Copper 1.7 litres (0.37 gal) - 30, 40 & 50 Models 2.1 litres (0.46 gal) - 60, 70, 80 & 100 Models
Appliance Lift Weight Appliance Weight Installed - Dry	26.0 kg (57.3 lbs) - 30, 40 & 50 Models 30.2 kg (66.6 lbs) - 60, 70 & 80 Models 34.6 kg (76.3 lbs) - 100 Model 32.0 kg (70.0 lbs) - 30, 40 & 50 Models 35.4 kg (78.1 lbs) - 60, 70 & 80 Models 39.7 kg (87.5 lbs) - 100 Model
Electricity Supply Internal Fuse Power Consumption Classifications	230v ~ 50Hz Fused at 3A Type 3.15AT 80 Watts (excluding pump) CAT 1_{2} H 2H G20 20 mbar IP20 C_{12}, C_{32}

SEDBUK Declaration for Suprima

Model	Seasonal Efficiency (SEDBUK) (%)
30L	78.0
40L	78.5
50L	78.1
60L	78.1
70L	78.6
80L	78.8
100L	78.0

This value is used in the UK Government's Standard Assessment Procedure (SAP) for energy rating of dwellings. The test data from which it has been calculated have been certified by 0063.

SAFETY, PERFORMANCE & QUALITY

Suprima boilers have been assessed by a Government appointed Notified Body and shown to meet the 'Essential Requirements' of the European Gas Appliance Directive.

The Directive lays down requirements for the safety and efficiency of the appliance, together with its design, construction, and use of materials. It also requires the production process to be covered by an approved and monitored system of quality assurance.

Introduction

Gas Safety (Installation & Use) Regulations 1998.

This appliance must be installed and serviced by a competent person, in accordance with the above regulations.

In the UK 'Corgi' Registered Installers (including the regions of British Gas Plc) undertake to work to a safe and satisfactory standard.

Failure to install appliances correctly could lead to prosecution.

It is in your own interest, and that of safety, to ensure that the regulations are complied with.

Suprima boilers are fully automatically controlled, wall mounted, fan powered, balanced flue appliances using a cast iron heat exchanger and are available in outputs ranging from 8.8 - 28.7 kW (30,000 - 98,000 Btu/h)

The boilers are designed for use on fully pumped open vented or sealed water systems with an indirect hot water cylinder.

THEY MUST NOT BE CONNECTED TO A DIRECT CYLINDER.

The boilers are for use on Natural Gas (G20) only.

Samples of the Suprima gas boilers have been examined by Gastec, a United Kingdom Notified Body. The range is certified to comply with the essential requirements of the Gas Appliance Directive 90/396/EEC, the Low Voltage Directive 72/23/EEC and shows compliance with the Electro Magnetic Compatibility Directive 89/336/EEC, the Boiler Efficiency Directive 92/42/EEC and are therefore permitted to carry the CE Mark.

Delivery & Kits Available

The unit is delivered in two packages (1) the boiler with fittings and (2) the flue/terminal assembly. See pages 38 & 39 for flue options.

Various kits are available for the Suprima range of boilers, see pages 40 & 41.

1. Installation Requirements

1.1 Health and Safety Information for the Installer and Service Engineer

Under the Consumer Protection Act 1987 and Section 6 of the Health and Safety at Work Act 1974, we are required to provide information on substances hazardous to health.

Small quantities of adhesives and sealants used in the product are cured and present no known hazards.

The following substances are also present.

Insulation and Seals

Material - Man Made Mineral Fibre.

Description - Boards, Ropes, Gaskets.

Known Hazards - Some people can suffer reddening and itching of the skin. Fibre entry into the eye will cause foreign body irritation which can cause severe irritation to people wearing contact lenses. Also irritation to respiratory tract.

Precautions - Dust goggles will protect eyes. People with a history of skin complaints may be particularly susceptible to irritation. High dust levels are only likely to arise following **harsh** abrasion. In general, normal handling and use will not present high risk, follow good hygiene practices, wash hands before touching eyes, consuming food, drinking or using the toilet.

First Aid - Medical attention must be sought following eye contact or prolonged reddening of the skin.

1.2 Codes of Practice

The boiler must be installed in accordance with: The Gas Safety (Installation and Use) Regulations 1998 and the current issue of:-

The Building Regulations, Building Standards (Scotland) Regulations, Local Building Regulations, Model and local Water Undertaking Bye-laws, IEE Wiring Regulations and Health & Safety Document No. 635 "The Electrician At Work Regulations 1989".

1.3 Gas Supply

The meter and supply pipes must be capable of delivering this quantity of gas in addition to the demand from any other appliances in the house and must be governed at the meter.

The complete installation must be tested for gas soundness and purged as described in BS6891.

1.4 Electricity Supply

230V ~ 50Hz via a fused double pole switch with a contact separation of at least 3 mm in both poles adjacent to the boiler. Power consumption is approximately 150W (inc. pump). There must be only one common isolator for the boiler and its control system and it must provide complete electrical isolation.

Fuse the supply at 3 A. The minimum requirement for the power supply cable is that it should be a PVC sheathed cord at least 0.75 mm² (24 x 0.2 mm) (code designation HO5 VV-F or HO5 VVH2-F) as specified in table 16 of BS6500:1984.

All wiring external to the boiler shall comply with the latest IEE Wiring Regulations, and any local regulations which apply.

WARNING: THIS APPLIANCE MUST BE EARTHED.

In the event of an electrical fault after installation of the boiler, preliminary electrical systems checks must be carried out i.e. Earth Continuity, Short Circuit, Polarity and Resistance to Earth.

1.5 Location of Boiler

The boiler is not suitable for external installation unless it is suitably protected.

If the sealed system kit is being used, this should be installed first. See instructions supplied with kit.

The boiler must be installed so that the flue terminal is exposed to the external air. It is important that the position of the terminal allows the free passage of air across it at all times.

The boiler must be mounted on a flat wall which is sufficiently robust to take the weight of the boiler.

The boiler is suitable for installation to a combustible wall e.g. wood cladding, provided that the flue duct is not closer than 25 mm to combustible material. A metal sleeve should be installed to surround the flue duct to provide a 25 mm annular space. Further guidance is given in BS5440:1:2000, sub-clause 4.4.

If the boiler is to be installed in a timber framed building it should be fitted in accordance with the Institute of Gas Engineers document IGE/UP/7/1998 (also, British Gas Service publication Part 19 - Building and Kitchen Work). If in doubt advice must be sought from Potterton.

The boiler may be installed in any room, although particular attention is drawn to the requirements of the current IEE Wiring Regulations and, in Scotland, the electrical provisions of the Building Standards applicable in Scotland with respect to the installation of the boiler in a room containing a bath or shower. Where a room-sealed appliance is installed in a room containing a bath or shower, any electrical switch or appliance control, utilising mains electricity should be so situated that it cannot be touched by a person using the bath or shower.

Where the installation of the boiler will be in an unusual position, special procedures may be necessary and BS6798 and BS5546 give detailed guidance on this aspect.

A cupboard or compartment used to enclose the boiler must be designed and constructed specifically for this purpose. An existing cupboard or compartment may be used provided that it is modified for the purpose. Details of essential features of cupboard/compartment design including airing cupboard installations are given in BS6798 and BS5546 and should be complied with.

The boiler requires only the clearances shown on Page 6, after installation.

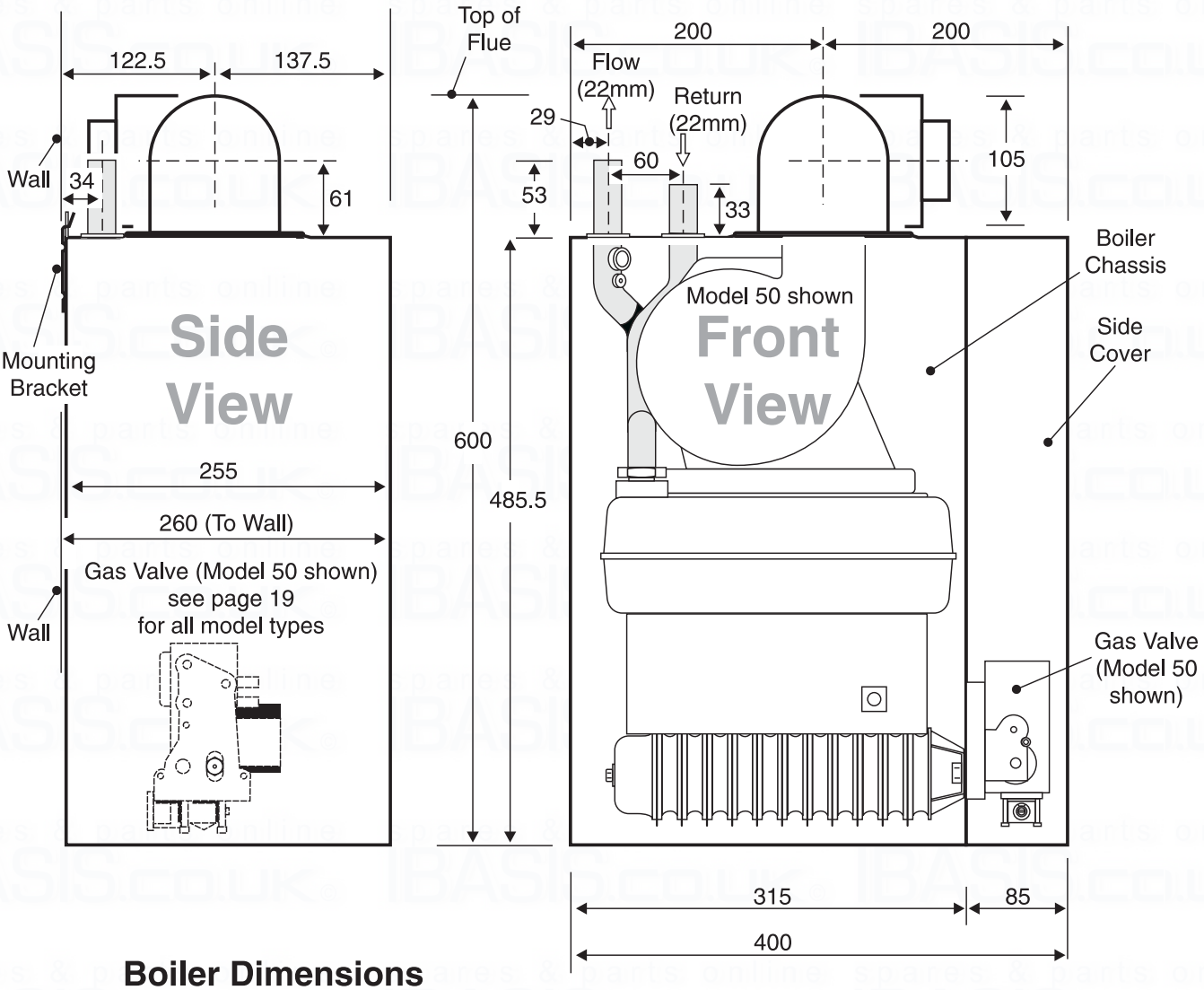

Boiler Dimensions

All Dimensions in mm

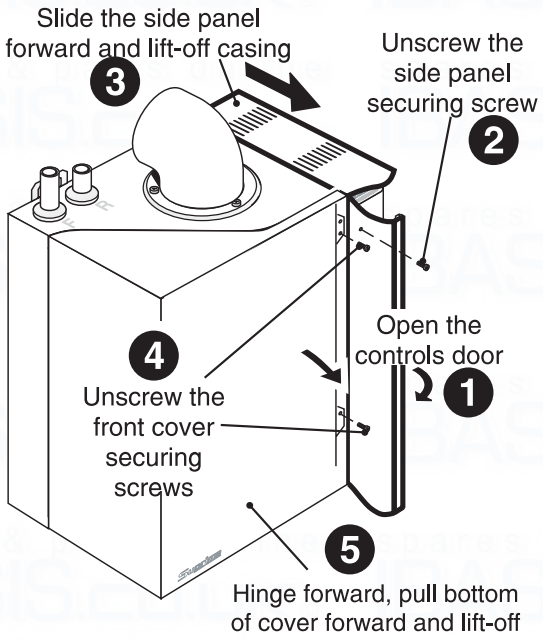

Remove The Outer Case

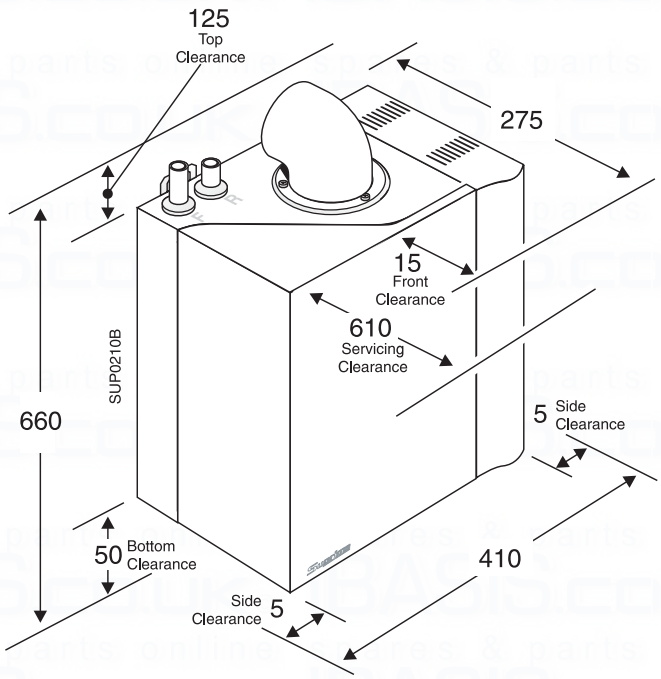

Boiler Clearances

Fig. 1

1.6 Air Supply

The air requirements must meet BS 5440 Part 2.
The room in which the boiler is installed does not require a purpose provided air vent.

1.6.1 Ventilated Cupboard/Compartment: If the boiler is installed in a cupboard or compartment (with the exception of those installations covered by Section 1.6.2), permanent air vents are required in the cupboard or compartment, one at high level and one at low level, either direct to the outside air or to a room. Both high level and low level air vents must communicate with the same room or must be on the same wall to outside air. Both the high level and low level vent must each have a free area as stated below. The free area of each vent may be halved if the ventilation is provided directly from outside.

Models:	30: 99 cm²	40: 133 cm²	50: 169 cm²	
	60: 198 cm²	70: 231 cm²	80: 264 cm²	100: 323 cm²

If the boiler is installed in a cupboard or compartment with a door, allow at least 15 mm clearance between the front of the boiler and the door for air movement.

1.6.2 Unventilated Compartment: The 30, 40 and 50 models can be installed in an unventilated compartment providing the following conditions are met and no other heat sources are present within the compartment:

Maximum Horizontal flue length from turret: 560 mm
Minimum clearances for alternative configurations

Front	280 mm	or	Front	490 mm
Side	75 mm		Side	175 mm
Bottom	250 mm		Bottom	100 mm
Top	450 mm		Top	265 mm

1.7 Flue Systems

Horizontal

- The flue/terminal assembly supplied is suitable for a wall thickness of between 150 mm and 300 mm.
- A flue/terminal assembly suitable for a wall thickness of up to 550 mm is also available.
- Both the flue/terminal assemblies are telescopic and the minimum lengths (150 mm/6 in) are achieved by cutting. Ensure that the same length is removed from the inner and outer tubes to maintain a 20 mm overlap (minimum).
- 1 m flue extensions are available.
- Under no circumstances should the total flue length exceed - 3.4 m, 30 - 80 models.
  - 0.68 m, 100 model No bends allowed.

Vertical

1. Twin Tube system, 30 - 80 models only.
   Maximum actual length 7 m (7 extensions)
   Maximum equivalent resistance = 7 m

2. Vertical Concentric system.
   30 - 80 models - Maximum actual length 3.4 m, equivalent resistance = 3.4 m.
   100 model - Maximum actual length 1.4m, No bends allowed.

Combination Flue System

- Combined horizontal & vertical concentric system for 30 - 80 models only.
  Maximum actual length 3.4 m, maximum equivalent length 3.4 m.

Note: All flue lengths quoted refer to straight lengths. For the effects of bends and offsets see Section 2.2 'Install the Flue' or the appropriate flue instructions.

1.8 Flue Terminal Location

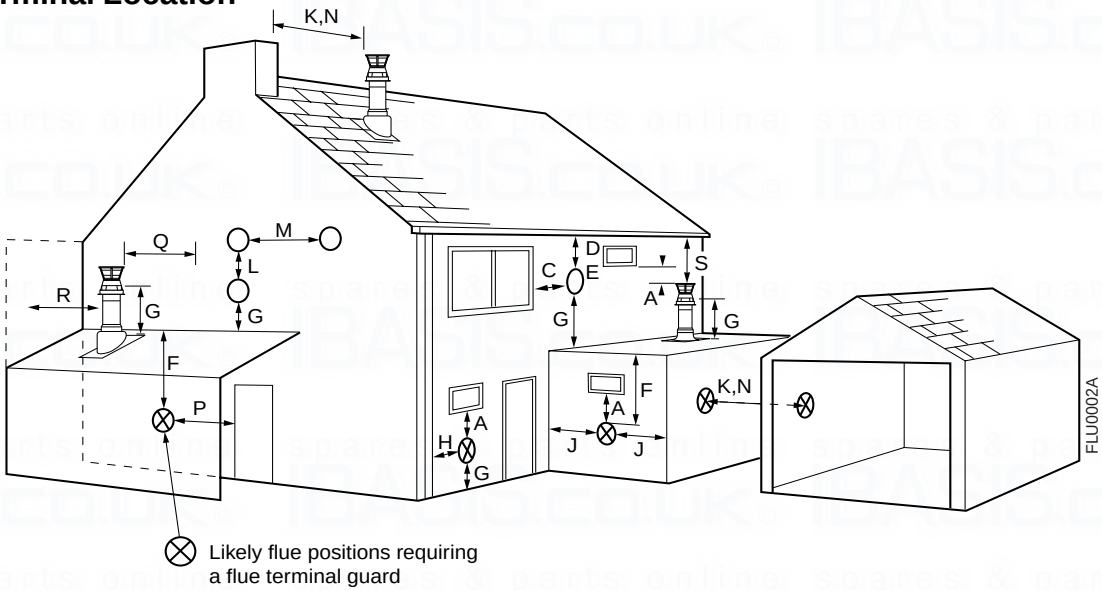

Fig. 2

- Where a horizontal flue is sited less than 2m above a balcony, above ground, or above a flat roof to which people have access, a suitable terminal guard must be fitted. This serves two purposes, to protect the terminal against damage or interference and to protect passers-by. A terminal guard is available (Sales Code: PTERMGUARDEF), this should be fitted centrally about the terminal.

  Note: Where a flue terminal is installed less than 1 metre from a plastic, or painted gutter, or 500 mm from painted eaves, an aluminium shield 1 metre long, should be fitted to the underside of the gutter or painted surface. A suitable wall plate should be fitted to the painted wall surface of a mobile home.

- **IMPORTANT:** It is absolutely ESSENTIAL, to ensure that products of combustion discharging from the terminal cannot re-enter the building, or any other adjacent building, through ventilators, windows, doors, natural air infiltration, or forced ventilation/air conditioning. If products of combustion are found to be re-entering any building, the appliance MUST be turned OFF IMMEDIATELY.

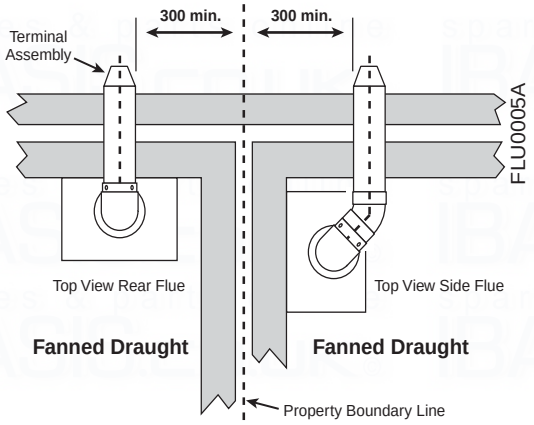

Terminal Position with Minimum Distance (mm)

Fanned Draught Balanced Flue

A	Directly below an opening, air brick, opening window etc	300
B	Above an opening, air brick, opening window, etc	300
C	Horizontally to an opening, air brick, opening window etc	300
D	Below a gutter, or sanitary pipework	75
E	Below the eaves	200
F	Below a balcony or carport roof	200
G	Above ground, roof or balcony level	300
H	From vertical drain/soil pipe work	150
J	From an internal or external corner	300
K	From a surface facing a terminal	600
L	Vertically from a terminal on the same wall	1500
M	Horizontally from a terminal on the same wall	300
N	From a terminal facing the terminal	1200
P	From an opening in a *carport* (e.g. door, windows) into the *building*	1200
Q	From adjacent wall to flue (vertical only)	210
R	From internal corner to flue (vertical only)	230
S	Below eaves or balcony (vertical only)	600

Reduced Clearances

This range of boilers has been tested and approved for use with certain clearances less than those shown above.

Only one of these reductions may be used on a single installation.

D	Below a gutter, or sanitary pipework	25
E	Below the eaves	25
F	Below a balcony or carport roof	25
H	From vertical drain/soil pipe work	25
J	From an internal or external corner	25

Note: The distance from a fanned draught appliance terminal installed parallel to a boundary may not be less than 300 mm in accordance with the diagram on the left.

1.9 The System

Before installing a new boiler to an existing system treat the system with an appropriate descaling/flushing agent as per the instructions supplied with the treatment package. It is recommended that any corrosion inhibitors and descalers/ flushing agents used are manufactured by Fernox or BetzDearborn.

If plastic pipe is used for the central heating circuit there must be a run of at least 2m of uninsulated copper pipe from the boiler flow and return connections.

The boiler must be used on Indirect Fully Pumped systems only, which may be sealed or open vented - See Page 12 for pump requirements.

The system should be designed so that the maximum static head does not exceed 30.5 m (100 ft) and a minimum of 150 mm (6 in). The flow pipe from the boiler must always be level to or higher than the return pipe.

On all systems the pump live connection should be wired to the boiler terminal block, it will then be controlled by the pump over-run. This will ensure that the pump will continue to run after boiler shut down if the water temperature is high, thus preventing nuisance operation of the overheat thermostat.

It is important that where electrically operated zone valves are used the boiler is wired so it does not cycle when the zone valves are closed. Also, systems fitted with controls that close both hot water and central heating circuits while the boiler is still hot, must be fitted with a by-pass circuit to dissipate the residual heat from within the boiler.

If a three port valve is used as shown in Fig. 5 a by-pass is not necessary since one circuit is always open.

Where a pair of two port valves are used, a by-pass is necessary. The total length of the by-pass circuit taken from the boiler connections should be greater than 4 metres of 22 mm pipe. It should be fitted with a lockshield valve and be adjusted to maintain a minimum flow through the boiler of 4.5 litres/min (1 gal/min).

Systems fitted with controls which allow the boiler to operate when both the hot water and central heating circuits are closed (i.e. mechanically operated thermostatic control valves) must be fitted with a by-pass circuit (2 m min. length of 22 mm dia. pipe) and capable of maintaining a minimum water flow rate through the boiler of 9 litres/min (2 gal/min).

A suggested method of meeting these requirements by using a bathroom radiator fitted with two lockshield valves is shown in Fig. 5. Additional system information can be found in the Control Systems, pipework and Wiring Guide. Drain off taps should be fitted in the pipework close to the boiler and in the low points of the system.

Note: Although the system can be emptied using the drain off taps installed in the pipework around the system, to empty the boiler it is necessary to remove the drain off screw positioned on the heat exchanger.

Sealed Systems

Note: If the sealed system kit is *Not* being used the installation must comply with the following requirements.

Installation
The installation must comply with the requirements of BS 6798: 1987 and BS 5449: Pt 1. The British Gas publication "British Gas Specification for Domestic Wet Central Heating Systems" should also be consulted.

Pressure Relief Valve
A non-adjustable spring-loaded pressure relief valve, preset to operate at 3 bar (45lbf/in²) shall be used. It must comply with BS 6759: Pt 1. and include a manual testing device. It shall be positioned in the flow pipe either horizontally or vertically upwards and close to the boiler. No shut-off valves are to be placed between the boiler and the safety valve. The valve should be installed with a discharge pipe which permits the safe discharge of steam and hot water such that no hazard to persons or damage to electrical components is caused.

Pressure Gauge
A pressure gauge incorporating a fill pressure indicator, covering the range 0 - 4 bar (60 lbf/in²) shall be fitted to the system. It should be connected to the system, preferably at the same point as the expansion vessel. Its location should be visible from the filling point.

Expansion Vessel
A diaphragm type expansion vessel to BS 4814: Pt 1. shall be fitted close to the inlet side of the pump. The connecting pipework should not be less than 15 mm. Pipework connecting the expansion vessel should not incorporate valves of any sort. Methods of supporting the vessel are supplied by the vessel manufacturer. The nitrogen or air charge pressure of the expansion vessel shall not be less than the hydrostatic head, (height of the top point of the system above the expansion vessel). To size the expansion vessel it is first necessary to calculate the volume of water in the system in litres. The following volumes may be used as a conservative guide to calculating the system volume.

Boiler Heat Exchanger:	2.1 litres
Small Bore Pipework:	1 litre per kW of system output
Micro Bore Pipework:	7 litres
Steel Panel Radiators:	8 litres per kW of system output
Low Water Capacity Radiators:	2 litres per kW of system output
Hot Water Cylinder:	2 litres

If the system is extended, the expansion vessel volume may have to be increased unless provision has been made for extension. Where a vessel of the calculated size is not available, the next available larger size should be used.
The boiler flow temperature is controlled at approximately 82°C. The vessel size can now be determined from the information in Table 1 where V = System volume in litres.

Vessel Charge Pressure (bar)	0.5	1.5
Initial System Pressure (bar)	1.0	1.0
Expansion Vessel Volume (litres)	V x 0.11	V x 0.087

Table 1.

Cylinder
The hot water cylinder must be an indirect coil type or a direct cylinder fitted with an immersion calorifier suitable for operating at a gauge pressure of 0.3 bar (5 lbf/in²) in excess of safety valve setting. Single feed indirect cylinders are not suitable for sealed systems.

Method of Make-up for sealed systems
Provision shall be made for replacing water loss from the system either:-

i) from a make-up vessel or tank mounted in a position higher than the top point of the system, and connected through a non-return valve to the system on the return side of the hot water cylinder or the return side of all heat emitters, see Fig.6.

or

ii) where access to a make-up vessel would be difficult by using the mains top up method or a remote automatic pressurisation and make-up unit as shown in Figs. 3 & 4.

Mains Connection
There shall be no connection to the mains water supply or to the water storage tank which supplies domestic hot water even though a non-return valve, without the approval of the Local Water Authority.

Filling Point
The system shall be fitted with a filling point at low level which incorporates a stop valve to BS 1010 and a double check valve of an accepted type to be fitted in this order from the system mains, see Fig. 3.

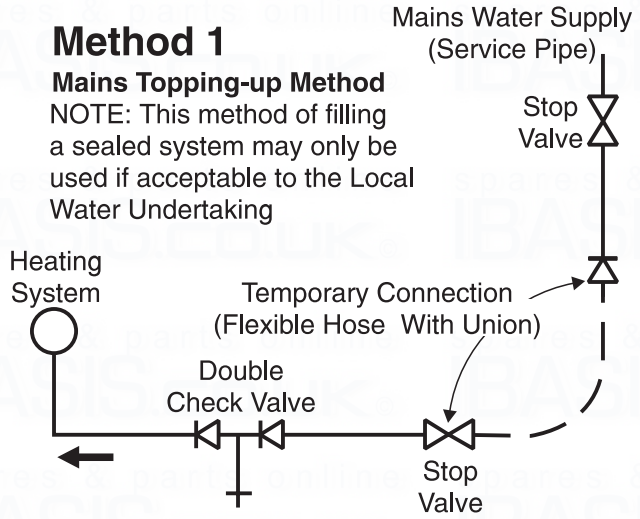

Fig. 3

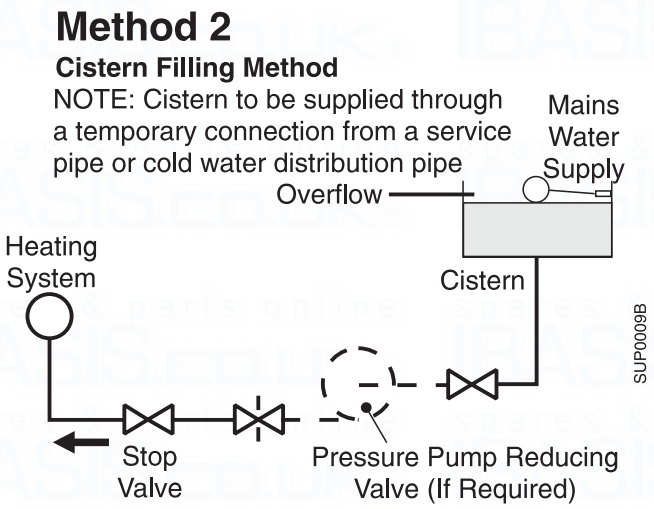

Fig. 4

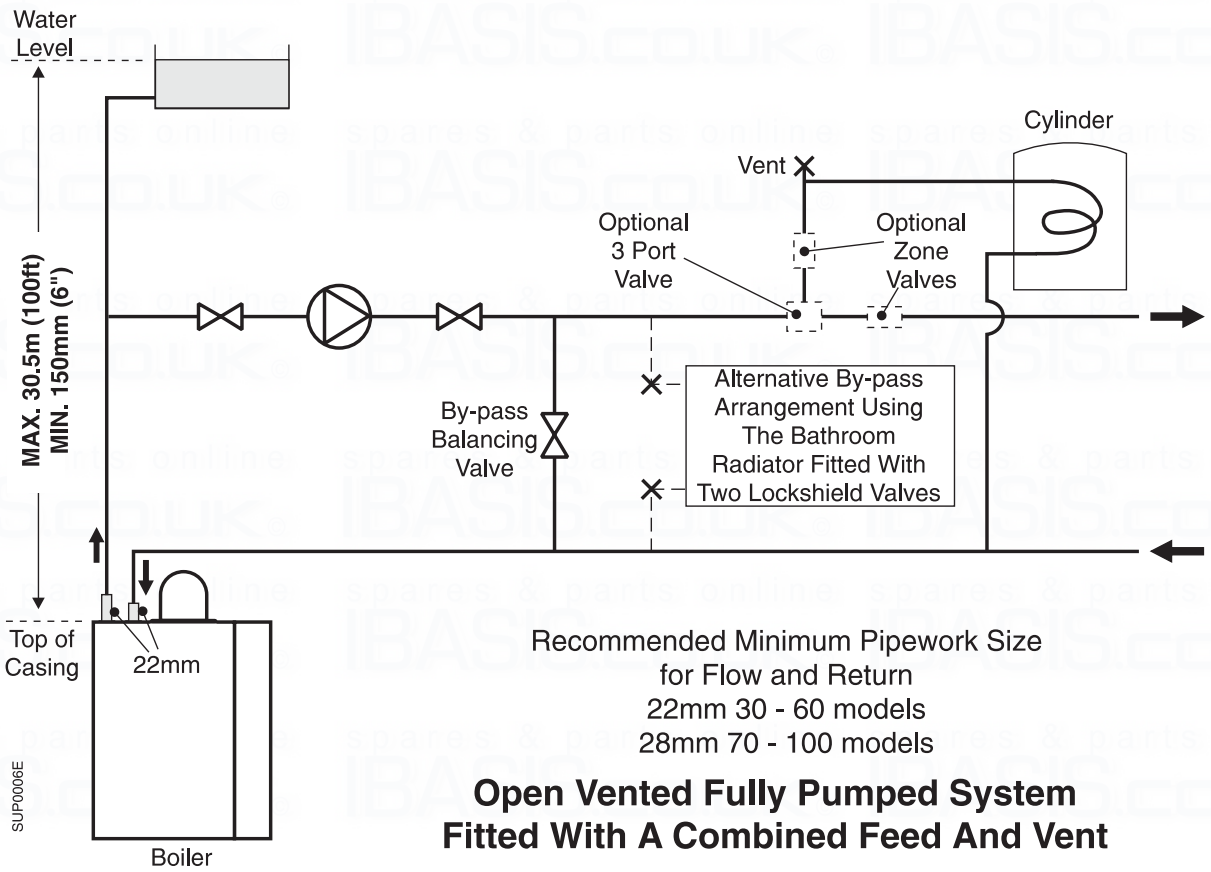
Water Level
MAX. 30.5m (100ft)
MIN. 150mm (6")
Cylinder
Vent
Optional 3 Port Valve
Optional Zone Valves
By-pass Balancing Valve
Alternative By-pass Arrangement Using The Bathroom Radiator Fitted With Two Lockshield Valves
Top of Casing
22mm
SUP0006E
Boiler
Recommended Minimum Pipework Size
for Flow and Return
22mm 30 - 60 models
28mm 70 - 100 models
Open Vented Fully Pumped System
Fitted With A Combined Feed And Vent

Fig. 5

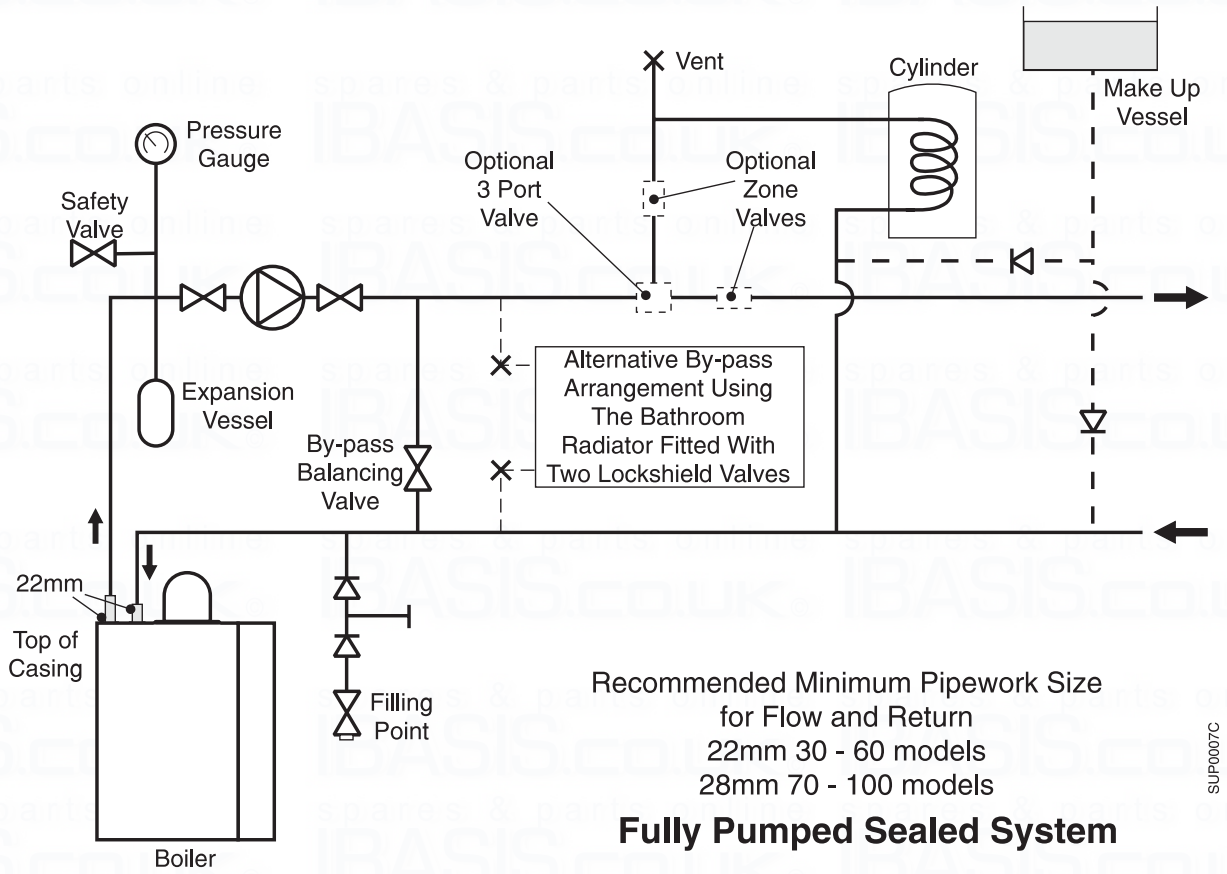
Vent
Cylinder
Make Up Vessel
Pressure Gauge
Safety Valve
Optional 3 Port Valve
Optional Zone Valves
Expansion Vessel
By-pass Balancing Valve
Alternative By-pass Arrangement Using The Bathroom Radiator Fitted With Two Lockshield Valves
22mm
Top of Casing
Filling Point
Boiler
Recommended Minimum Pipework Size
for Flow and Return
22mm 30 - 60 models
28mm 70 - 100 models
SUP0007C
Fully Pumped Sealed System

Fig. 6

Circulation Pump Selection

The resistance through the heat exchanger when operating with a water flow rate producing an 11°C temperature rise at maximum boiler output are shown in the table. If other controls such as three position valves are used in the system, the resistance through them, quoted in their manufacturers literature must be taken into account. The pump may be fitted on either the flow or return and MUST be wired directly to the boiler terminal block. It must be fitted with two isolating valves which are positioned as close to the pump as possible. Closing of any valve must always leave the open vent unobstructed.

	Water Flow Rate	Boiler Resistance	
	l/min	mbar	m
30	11.5	17.5	0.18
40	15.2	35.3	0.36
50	19.2	44.9	0.46
60	22.9	59.5	0.61
70	26.7	80.9	0.83
80	30.5	105.3	1.08
100	37.4	147.0	1.50

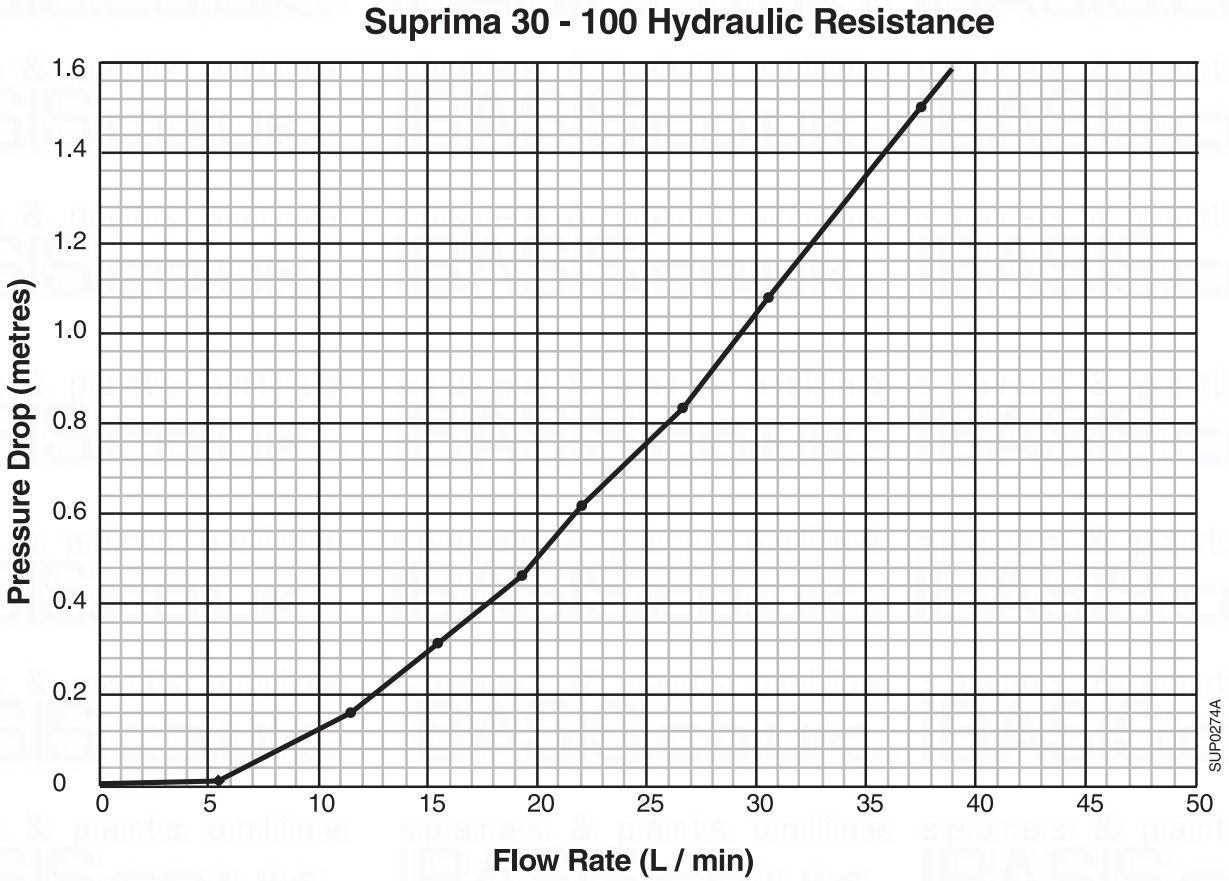

2. Installation

2.1 Unpack & Prepare the Boiler

These instructions assume you have decided on where the boiler will be located and the type of flue system to be used.

1. Carefully unpack the boiler.
2. Do not discard any packaging until all the items are accounted for.
3. Open the controls cover, remove the securing screw and washer, pull off the controls cover and put safely aside.
4. Remove two screws and washers, remove the white front case and put safely aside.
5. Place the mounting template in the proposed boiler position ensuring that it is level. Minimum clearances are accounted for on the template.
6. Mark the flue hole, remove the template and carefully cut the flue hole through the wall.

7. Replace the template centrally over the hole (ensure template is level), mark two screw fixing hole positions for the mounting bracket and one for the securing point.
8. Remove the template, drill (7 mm drill) and plug the three holes.
9. Secure the mounting bracket to the wall using two No. 12 x 2" woodscrews.
10. Lift the boiler onto the mounting bracket, slide both boiler securing clips over the mounting bracket (this prevents the boiler from being accidently lifted off the the mounting bracket), see Fig.7.
    To square the boiler to the wall adjust the boiler alignement screws on the back panel of the boiler.
11. The third screw provided is also to prevent the boiler from being lifted off the mounting bracket, once the boiler is mounted on the wall. This screw can be replaced by an anti-theft kit see note below.

Note: There is provision for an anti-theft securing point (sales code: SUPKITP) which may be used if required.

2.2 Install the Flue

Maximum equivalent flue lengths are as follows: 30 - 80 Models - 3.4m, 100 Model - 0.68m (no bends allowed).

These instructions are for rear and side flue applications.

Rear Flue

1. Measure the wall thickness and add 66mm (or 106mm for installations using the System Boiler or Stand Off Kits).

Side Flue

1. Determine the X dimension (wall thickness + distance to boiler centreline).

For both Rear & Side Flues

2. Extend the telescopic flue to the required length, minimum 20 mm overlap.
3. Drill through the pilot hole and secure with self tapping screw.
4. Wrap tape around the joint on the outer duct to seal the flue, slide drip ring into a position to coincide with the air gap in the wall (cavity wall).
5. Slide the flue through the hole until it stops on the pin.
6. The boiler is supplied with the flue elbow set to the rear. For side outlet slacken the screws and turn the elbow to the required position and re-tighten screws. Ensure that the seals are still correctly located.

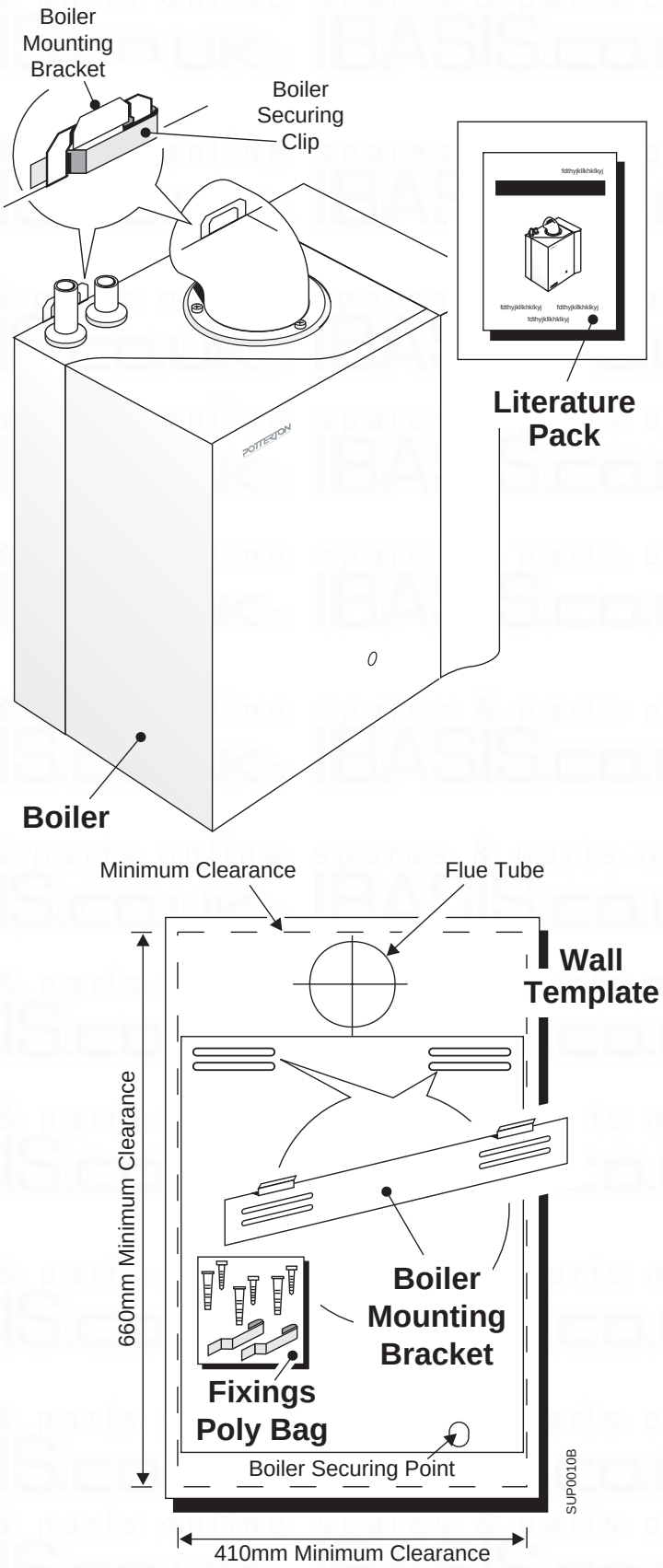

Fig. 7

7. Slide the flue back until it engages in the elbow bayonet connection, twist anti-clockwise to lock.
8. Drill through pilot hole and lock flue in position with the self tapping screw provided.
9. Make good the wall around the flue, both outside and inside.

For extension kits refer to pages 38 & 39. If a Horizontal Extension is required this MUST be combined with a Standard Flue as shown below in the Maximum Flue Length Guide.

If a in-line bend is required in the flue the following rules apply:

A 90° in-line bend is the equivalent to a 1m length of flue.

A 135° in-line bend is the equivalent to a ½m length of flue.

The maximum equivalent flue resistance allowed when using bends is:
30-80 models - 3.4m, 100 model - not allowed.

Note: For flue lengths less than the minimum telescopic length, the tubes can be cut to suit. Ensure that the same length is removed from the inner and outer tubes to maintain a 20 mm overlap (minimum).

For further information see the publications supplied with the flue system.

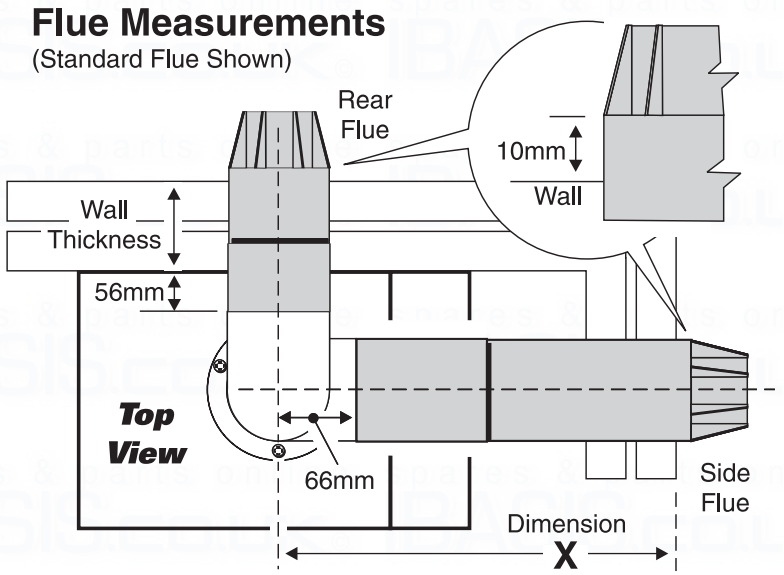

Rear Flue without Boiler Stand Off Kit	Rear Flue with Boiler Stand Off and System kits	Side Flue
Flue Length = Wall Thickness + 66mm	***Flue Length =*** Wall Thickness + 106mm	***Flue Length =*** Dimension X − 56mm

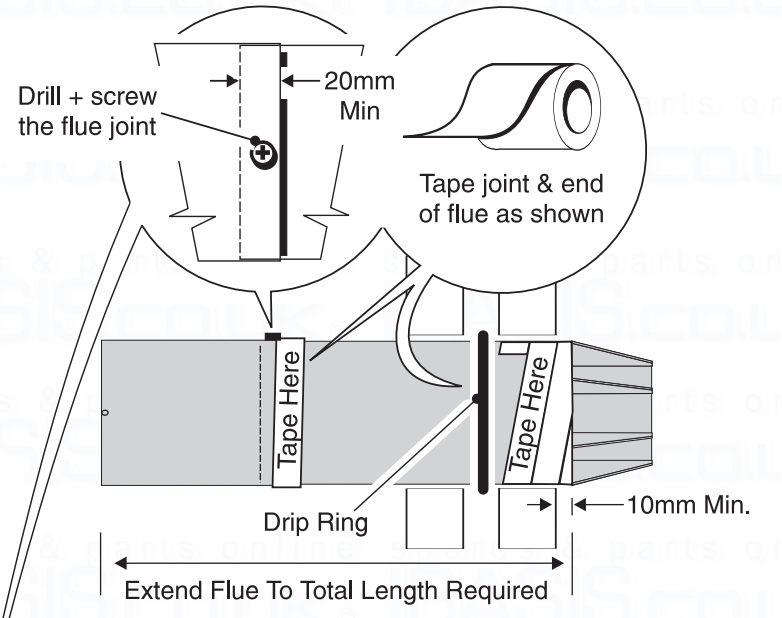

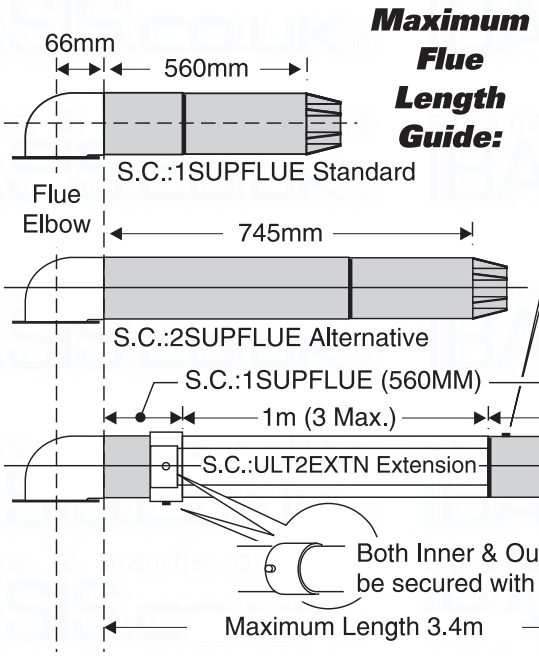

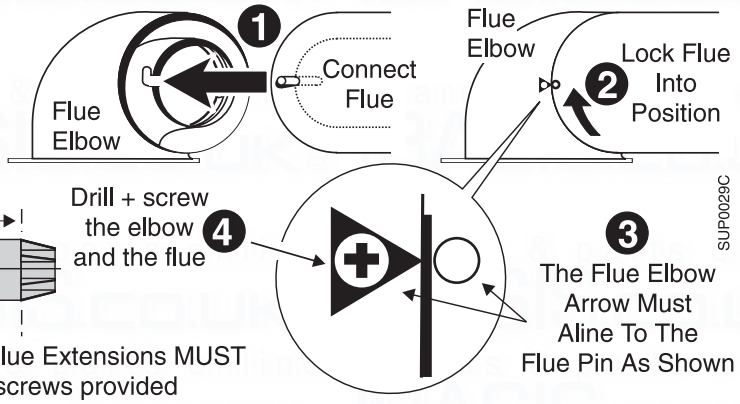

Fig. 8

2.3 Connect the Power Supply Cable

1. Cable clamping is provided on the front of the controls panel. Feed the cables up and over the back of the chassis, through the clamp and into the terminal connection. Connect the wires, brown to L, blue to N and green/yellow to earth (⏚).

   Note: When connecting the power supply cable, ensure that the length of the earth wire is such, that if the power supply cable pulls out of the cable clamp the live and neutral wires become taut before the earth wire.

2. The pump wiring should be routed through the hole in the base of the rear cover, through the cable clamp and connected to the terminal connection.
3. Take up excess slack in the cables between the terminal block and the cable clamp, then tighten the cable clamp screws. Ensure sufficient slack is available to the cable clamps to allow the control panel to hinge freely. Check by opening the control panel.
   If fitting the optional integral programmer go to section 2.4 before performing steps 4 and 5 below.
4. Secure the controls assembly to the chassis using the screw previously removed.
5. Carry out preliminary electrical system checks i.e. Earth Continuity, Short Circuit, Polarity and Resistance to Earth.

Frost Thermostat:
If a Frost Thermostat is to be fitted, the connections should be made in the wiring external to the boiler.
The Frost Thermostat should be connected between the Permanent Live & Switch Live in the mains terminal block on the boiler.

Do not switch on the electricity supply at this stage.

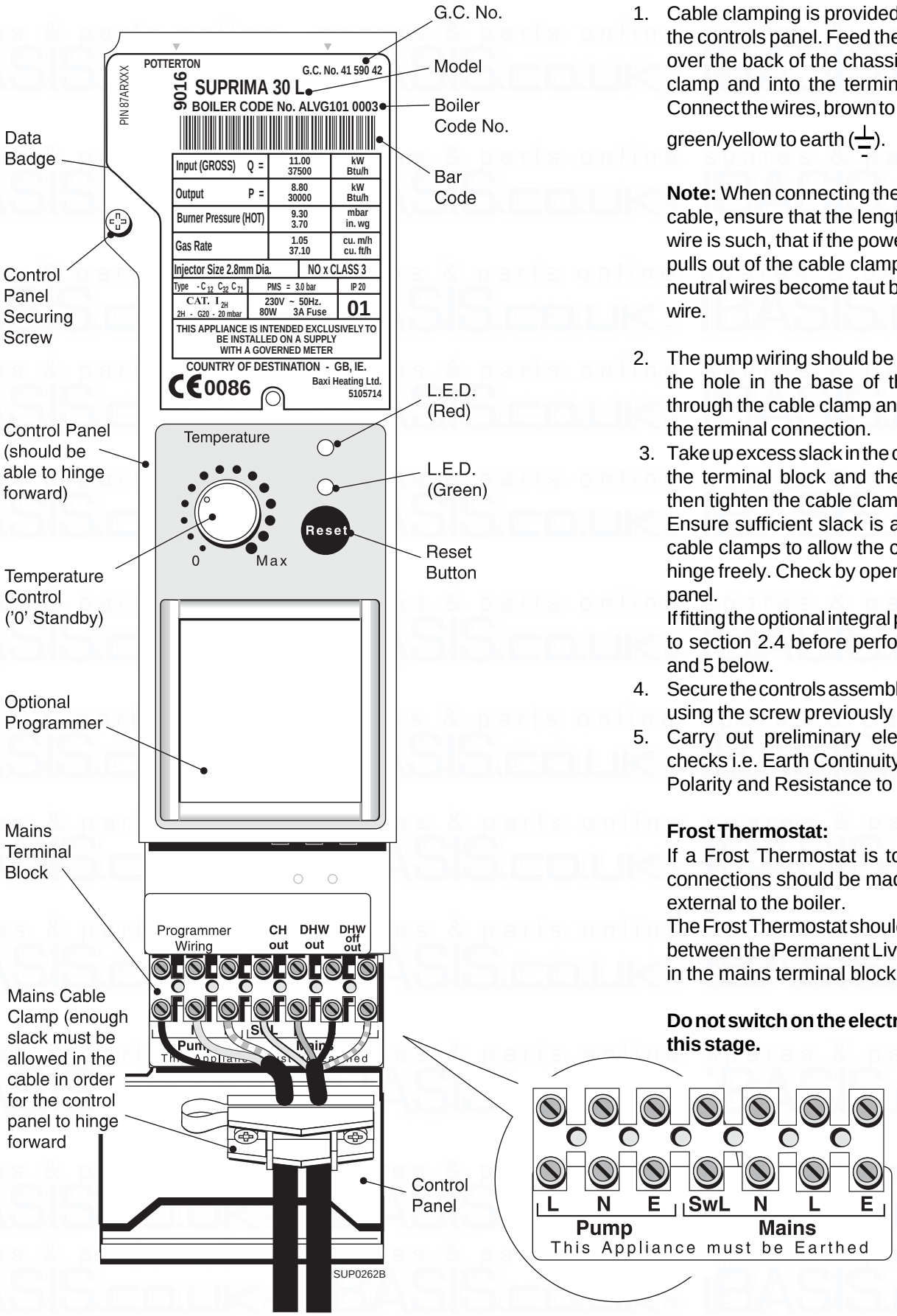

Fig. 9

2.4 Install the Optional Programmer

1. Install the programmer as shown in the instructions supplied with it.

2.5 Connect the Gas Supply

Ensure that the gas supply is isolated. Connect the gas supply using a suitable adaptor to the gas valve or 15 mm copper tail (100 model).

Important:
To prevent damage to the 'O' ring, do not solder the fitting whilst assembled to the gas valve.

The pipe diameter required will depend on the boiler model and the pipe length from the gas meter. Ensure that the gas supply pipe is selected in accordance with BS 6891 so that an adequate gas supply to the boiler is provided.

Do not turn the gas supply on at this stage.

Fig. 10

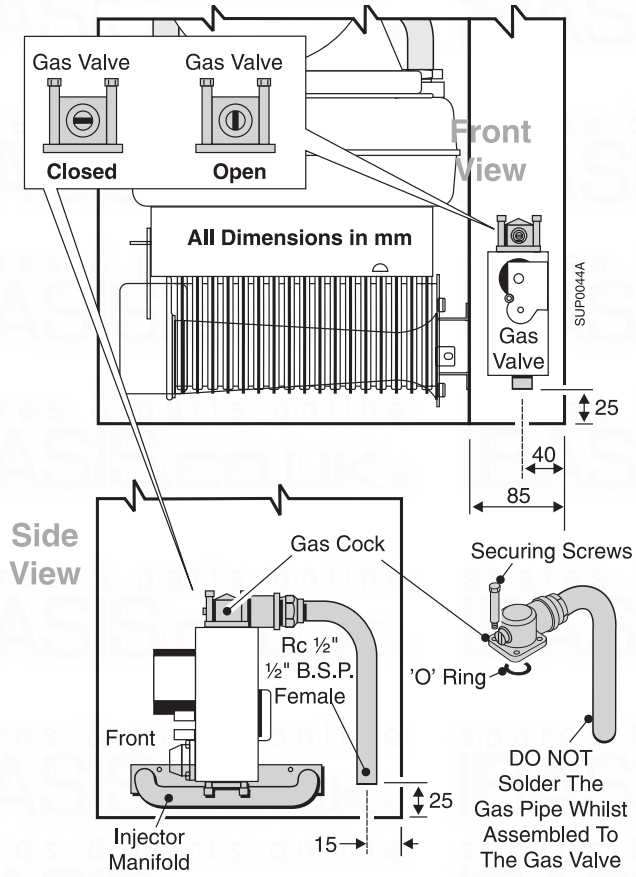

100 model

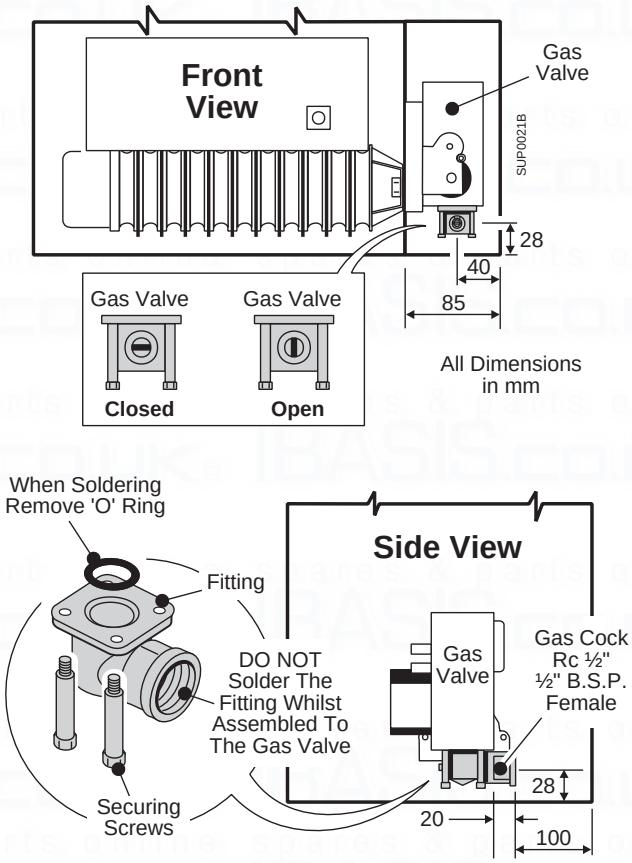

30 - 80 models

Fig. 11

2.6 Connect the Water System

1. Connect system pipework to the boiler, compression fittings should be used.

   Note: Drain off taps should be installed close to the boiler and at the lowest points in the system.

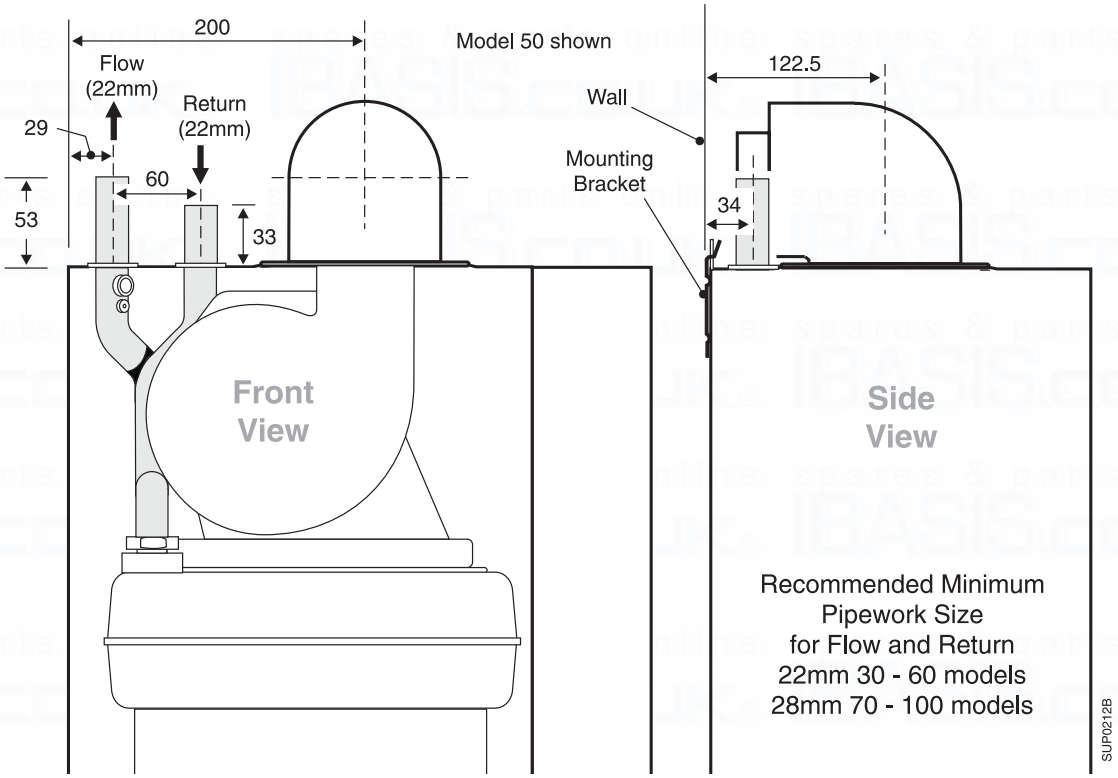

Fig. 12

3. Commissioning

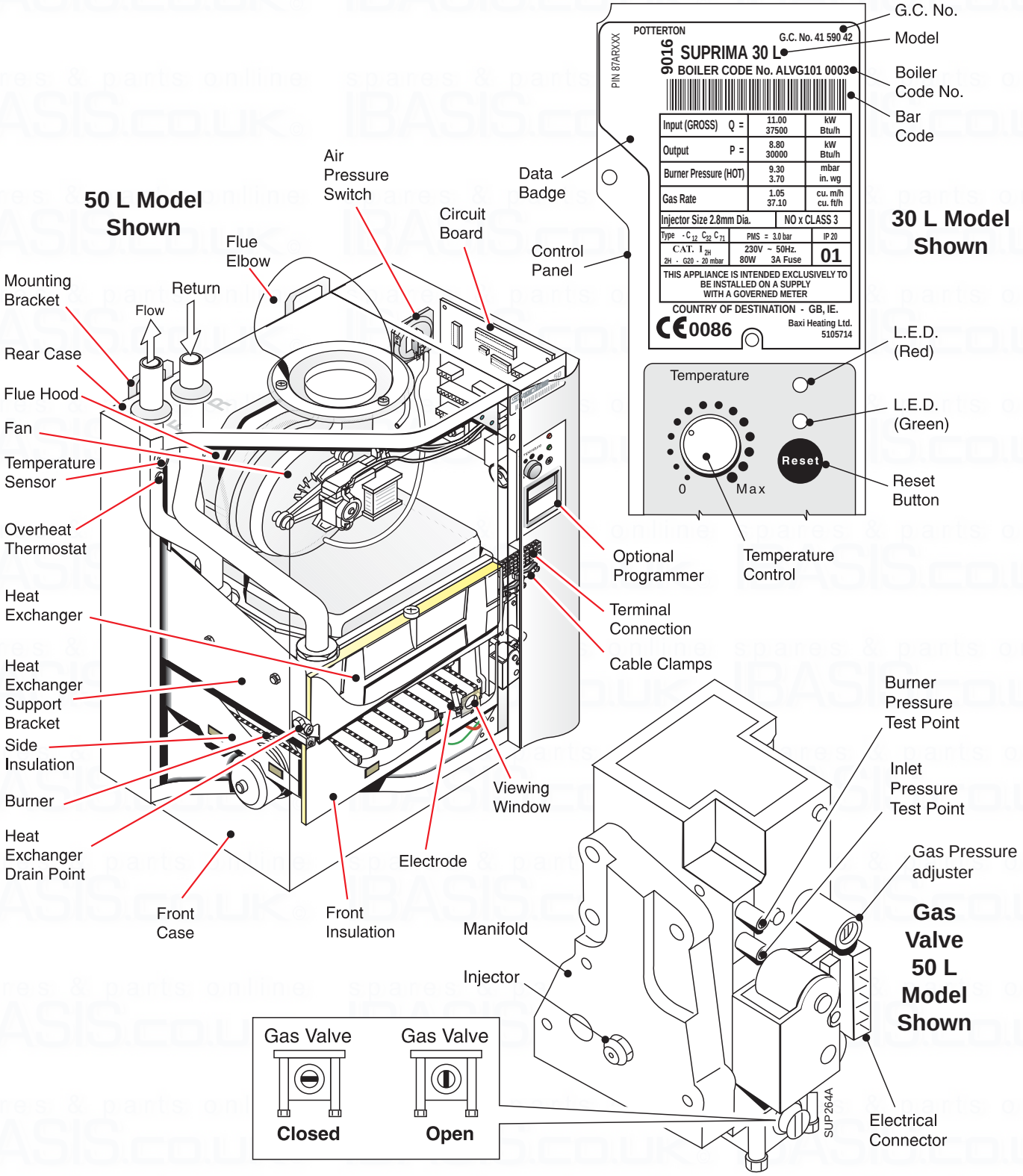

Fig. 13

100 model shown

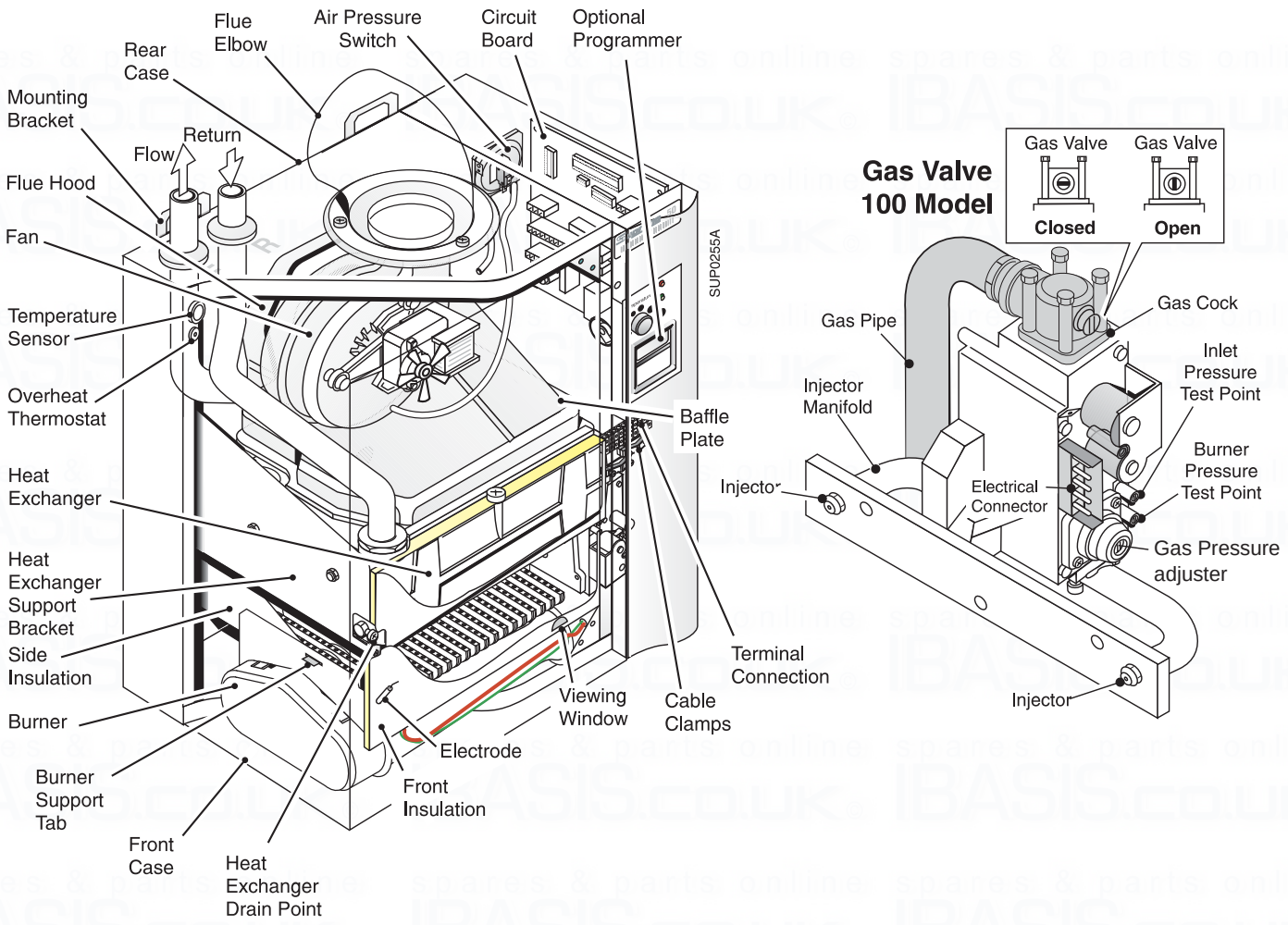

Fig. 14

Important
The commissioning and boiler adjustment must only be carried out by a suitably qualified personnel. Potterton offer this service on a chargeable basis.

Important
When checking for gas soundness open all windows and doors in the room.
Extinguish all naked lights, cigarettes, pipes, etc.

3.1 Commission the Boiler

Open Vented Systems - Remove the pump and flush the system thoroughly with cold water. Re-fit the pump. Fill and vent the system then check for leaks.

Sealed Systems - Remove the pump and flush the system thoroughly with cold water. Re-fit the pump. Fill and vent the system until the pressure gauge registers 1.5 bar (21.5 lbf/in²) and check for leaks.

IMPORTANT: The pressure relief valve is factory tested and does not need testing during the commissioning of the boiler. It must not be used to reduce system pressure as it may cause debris in the system to foul the valve.

All Systems

Warning: Before lighting the boiler, ensure that the outer white case has been correctly fitted and that the sealing strip fitted to the outer white case is forming a tight seal with the main boiler chassis. The controls cover is left off at this stage.

Preliminary electrical system checks

These checks must be carried out before attempting to light the boiler.

They are:- Earth Continuity, Short Circuit, Polarity & Resistance to Earth.

Commission

1. The whole of the gas installation must be checked for soundness and purged in accordance with BS 6891.

2. Set the boiler temperature control knob to 'O' Standby.

3. Turn the boiler gas service cock to the 'On' position and ensure that the main gas supply is turned 'On'.

4. Make sure that the system is full of water and that the pump and radiator isolating valves are open. Vent air from the system.

5. Ensure that the main electricity supply is 'On'.

6. Check that the time control, if fitted, is in an 'On' position and that the room and cylinder thermostat, where fitted are set to high temperatures.

First time lighting:

7. Set the temperature control knob to its maximum setting. The boiler will attempt to light, if the boiler does not light within 3 attempts (due to air in the system) the boiler controls will go to 'Lockout' and the upper Red LED on the control panel will go to a rapid flashing mode. To re-start the lighting sequence press the reset button on the control panel. There will be a short delay before the lighting sequence starts.

When the burner flame has established lower Green LED on the user control panel will be on continuously.

LED Indicators Status	Green LED	Red LED
Mains ON Only	OFF	ON
Ext. Call for Heat *(Boiler set to STNDBY, Temp. Control set to 'O' Off)*	FLASHING 2 Per Sec.	ON
Ext. Call for Heat *(STNDBY switch to ON, Temp. Control set to Max.)*	FLASHING 2 Per Sec.	OFF
Ignition *(i.e. Gas and Sparks ON)*	FLASHING 16 Per Sec.	OFF
FLAME Detected	ON	OFF
Boiler Temperature Control Satisfied	FLASHING 2 Per Sec.	ON

8. With the main burner running, check for gas soundness using leak detection fluid.

9. Allow the system to reach maximum working temperature and examine for water leaks. Set the temperature control to 'Standby' and drain the system whilst still hot.

Note: Should the boiler fail to operate correctly refer to the Fault Finding Guide and the boiler wiring diagram for further information.

10. Re-fill and vent the system making a final check for leaks.

11. On sealed systems adjust to the correct cold fill pressure. Set the pressure gauge pointer to the system design pressure.

12. If a by-pass circuit is fitted the by-pass valve should be adjusted so as to maintain sufficient water flow through the boiler to ensure that the overheat thermostat does not operate under normal conditions.

13. If the boiler fails to operate

Check the LED indicator fault modes below and refer to fault finding guide and boiler wiring diagram.

LED Indicators Fault Modes Status	Green LED	Red LED
Blocking - Mains Frequency incorrect or Air Switch **Fault** > 1 min. or **Reset** button held in to force a restart	ON	FLASHING 2 Per Sec.
Earth Fault or **Mains Reversal**	FLASHING 2 Per Sec.	FLASHING 2 Per Sec.
Lockout	OFF	FLASHING 2 Per Sec.

3.2 Final Adjustments

1. Use a pressure gauge to check the inlet and burner pressures. See the Data Badge for figures.

2. Turn the boiler on and allow to run for 10 minutes.

3. Check that the inlet pressure is 20mbar.

4. Check that the burner pressure is in accordance with the information on the boiler data badge. The gas valve is factory set, but if adjustment is required follow Section 4.3.7 or 4.3.10.

5. Check at the gas meter that the gas rate is correct.

6. Set the temperature control knob to 'O' Standby and check that the main burner shuts down. Remove the pressure gauges, re- fit the screws and check for gas soundness.

7. Re-fit the controls cover and secure with the screw previously removed.

Control Thermostat

At its minimum and maximum settings, the thermostat should control the water flow temperature at approximately 57 °C - 82 °C.

Overheat Thermostat

The overheat thermostat is pre-set and no adjustment is possible. It will require manual re-setting if an overheat condition occurs (the LED will go to flashing Red).

The re-set button is located on the controls assembly.

Other Boiler Controls

No further setting or checking is necessary as all boiler mounted controls are designed so that if a fault should occur they will fail safe.

External Controls

Check that any other external controls connected in the system, such as clocks or thermostats, control the boiler are set as required.

3.3 Advise the User

On completion of the installation, the installer should demonstrate the operation of the boiler and its associated controls. Also hand over all the instructions.

1. If a programmer is fitted, set the time and programme the required settings as shown in the instructions supplied with the programmer.

2. Advise the user of the precautions necessary to prevent damage to the system and to the building in the event of the system remaining inoperative during frost conditions.

3. Advise the User that for continued efficient and safe operation of the boiler it is important that adequate servicing is carried out at least once a year by a Potterton Service Engineer, the local Gas Supplier or a C.O.R.G.I. Registered Installer.

4. Leave a permanent card attached to the boiler giving:

   a. Name and address of installer.

   b. Date of installation.

   c. A wiring diagram of the external control circuit.

5. And finally, complete the Benchmark Log Book and hand over all the instructions supplied.

4. To Service the Boiler & Component Replacement

- To ensure continued efficient operation of the appliance, it is recommended that it is checked and cleaned as necessary at regular intervals.
- The frequency of servicing will depend upon the particular installation conditions and usage but in general once per year should be adequate.
- It is the law that any service work must be carried out by a competent person who is C.O.R.G.I. Registered.
- Before servicing, fire the appliance and check that the flames are blue and stable. Yellow flame and excessive lifting indicate poor combustion.
- **WARNING: Before commencing work turn the temperature control knob to 'O' Off and allow the appliance to cool, isolate the electricity supply.**
- **If the gas valve is to be removed turn off the gas supply at the appliance service cock.**
- **IMPORTANT: Always test for gas soundness after completing any servicing of gas carrying components and carry out functional checks of controls.**
- **IMPORTANT: Ensure that the outer white case is correctly fitted and that the sealing strip fitted to the door is forming a tight seal with the boiler casing.**

Remember to fill in the Benchmark Log Book

Notes on Cleaning Boiler Components

Heat Exchanger: Place a sheet of paper under the heat exchanger then using a flat blade tool (Part No. 907736), scrape the flueway fin surfaces in a downward movement. This will ensure that most of the deposits will be collected on the paper.

Burner: Brush the burner top and check that the flame ports are clear. Any blockage may be removed with a fine wire brush. Turn the burner upside down and tap gently to remove any debris (Protect the electrode).

Electrode: If the electrode requires cleaning wipe the surface using a solvent.

Main Injector: Omit this operation if the gas rate is correct, otherwise clean by blowing through. Do **NOT** clear the injector with a pin or wire.

Fan Assembly: Examine the fan impellor and carefully clean if necessary.

Flue: Inspect the flue terminal and flue/air tube for blockage and integrity, rectify if necessary.

4.1 General Access

Warning: Before starting work, open the controls cover and set the temperature control knob to 'O' Off. Isolate the electricity supply and if a gas carrying component is to be removed, isolate the gas supply at the appliance service cock. Allow the boiler to cool.

Important: Always test for gas soundness after completing any exchange of gas carrying components and carry out a functional check of the controls.

Re-assemble all parts in reverse order.

1. Remove the securing screw and slide off the controls cover. Put safely aside.

To complete sections 4.3.3 to 4.3.15 perform the following:-

2. Remove the two screws securing the outer white case to the chassis. Hinge forward, pull bottom of cover forward and lift off. Put safely aside.

4.2 To Service the Boiler

1. Note how it fits and disconnect the tube from the front of the fan housing.
2. Disconnect the wires from the fan motor.
3. Remove the two screws securing the fan to the flue hood. Carefully pull the fan down and away from the flue hood.
4. Remove the flue hood.
5. Remove the screw securing the combustion chamber front to the heat exchanger and remove the panel.
6. Disconnect the electrode and earth wire.
7. Undo the fixing screw, hold the burner at the right hand side and pull forward to disconnect from the box.

   If necessary, remove the injector(s), refer to Sections 4.3.5 (30 - 80) or 4.3.11 (100).

   The heat exchanger, burner and fan can now be inspected. If deposits have formed on these items and on ancillary components clean as detailed in the notes at the start of this section.

   The boiler can be re-assembled in reverse order. Ensure that any electrical connections are in place and that any damaged seals or insulation are replaced before re-fitting the controls cover.

   Check the gas pressure, refer to Section 4.3.7 (30 - 80) or 4.3.10 (100).

Other Components

No other servicing is required on any other boiler component.

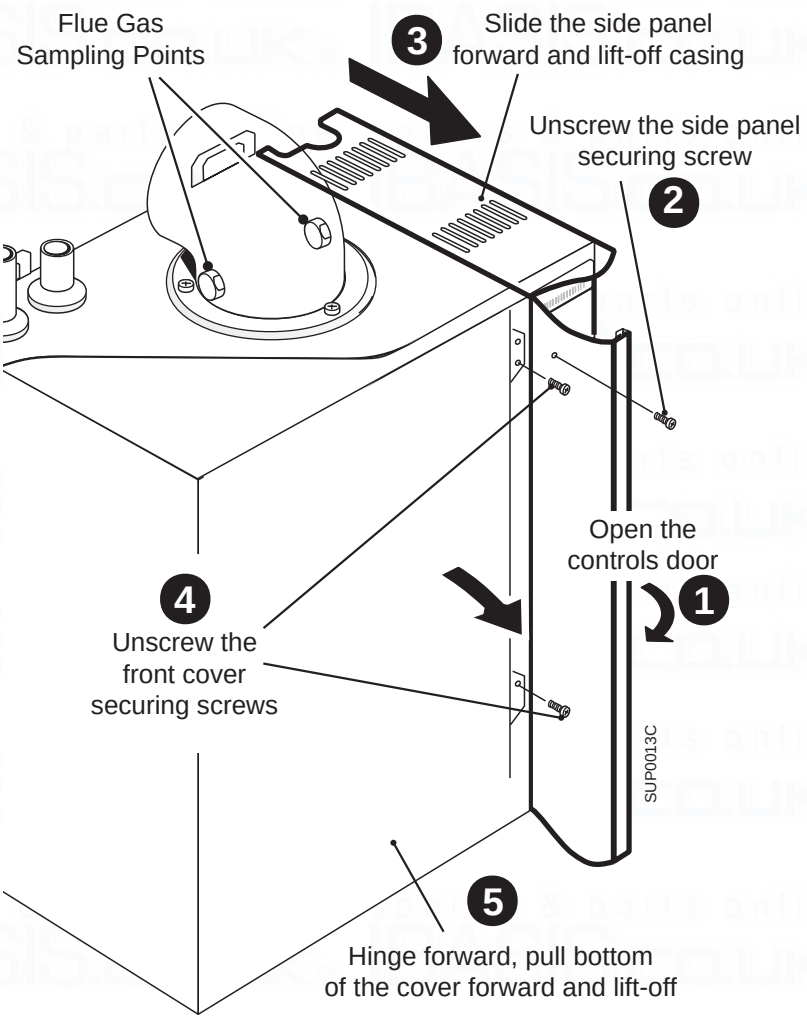

Fig. 15

4.3 Component Replacement (see over page)

Warning

Before attempting to remove any component from the appliance first disconnect the mains electricity supply by removing the plug from the wall socket or by switching off the appliance at the external isolating switch.

The 'O' (off) position on the boiler temperature control will leave parts of the boiler Live.

If the appliance gas valve is to be removed it will be necessary to isolate the gas supply at the appliance isolating valve.

Important

After removal or replacement of any gas carrying component a test for gas soundness must be made and functional check of the controls carried out.

Important

Any 'O' rings, seals or gaskets disturbed during replacement of parts must be visually inspected and replaced if worn or damaged.

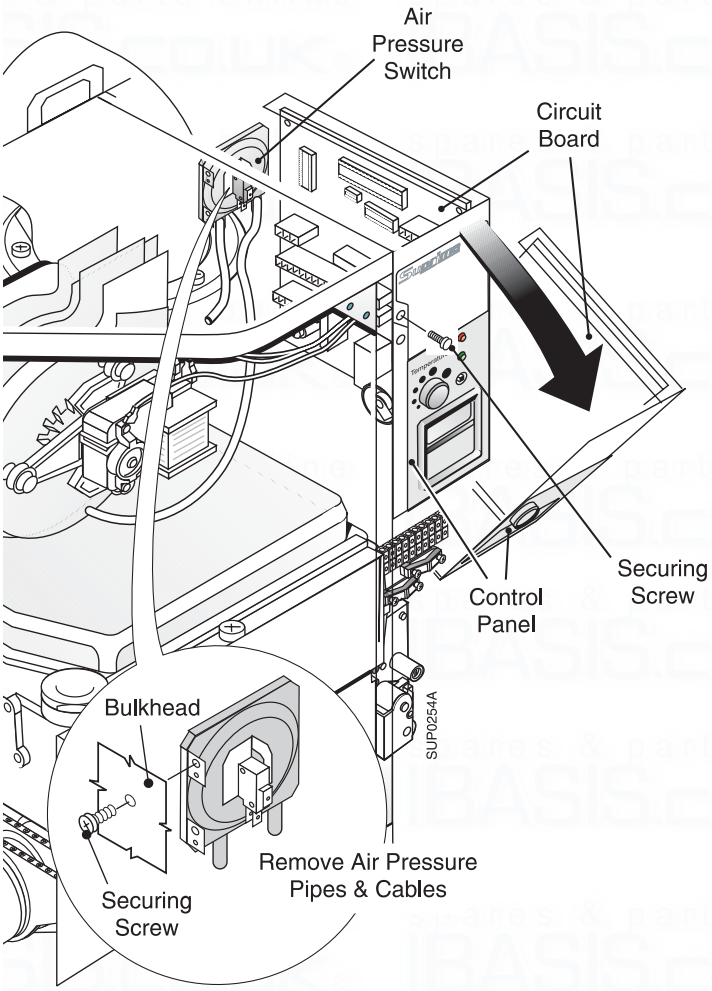

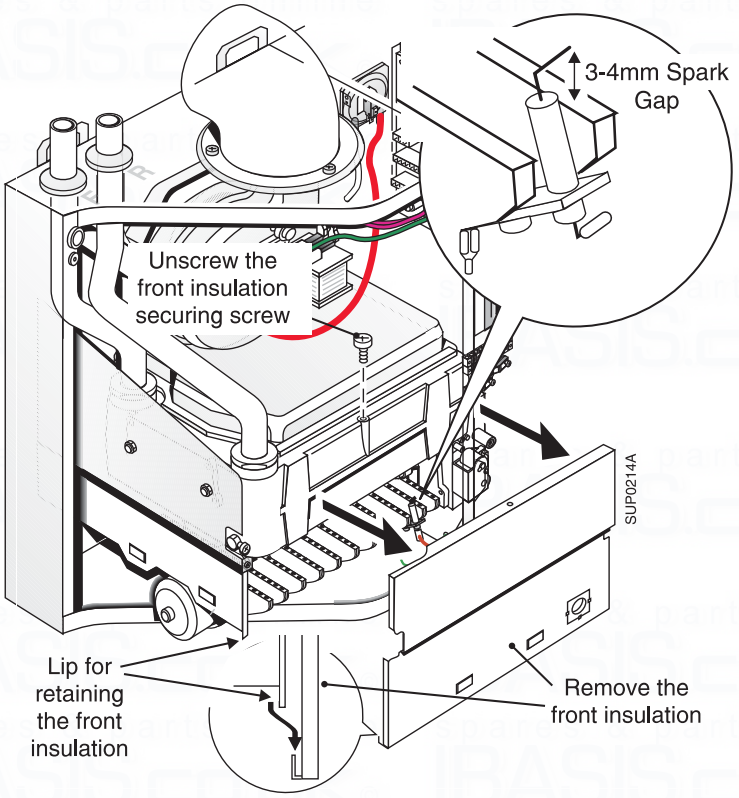

Fig. 16

4.3.1 Electronic Control Board

Gain General Access - See 4.1

1. Remove the securing screw and allow the control panel to pivot forwards.
2. Disconnect all connectors and wires, unscrew the four securing screws and remove the board.
3. On re-assembly refer to the wiring diagram when re-connecting wires and connectors.

4.3.2 Air Pressure Switch

Gain General Access - See 4.1

1. Remove the securing screw and allow the control panel to pivot forwards.
2. Note the wire connections and disconnect the wires to the air pressure switch.
3. Remove the screw (access through the fan compartment) securing the air pressure switch to the chassis.
4. Re-assemble in reverse order.

4.3.3 Electrode

Gain General Access - See 4.1

1. Pull the electrode lead off the electrode, remove the securing screw and remove the electrode.
2. On re-assembly check the gap between the electrode tip and the burner face. It should be 3 - 4 mm. If required adjustment can be made by careful use of pliers.

4.3.4 Burner 30 - 80 models

Gain General Access - See 4.1

1. Disconnect the electrode lead and earth wire.
2. Undo the fixing screw, hold the burner at the right hand side and pull forwards to disconnect from the air box.
3. Unscrew the electrode and transfer to the new burner.
4. Re-assemble in reverse order, on re-assembly hook the rear of the locating bracket (1) in place before locating the front (2).

4.3.5 Injector 30 - 80 models

Gain General Access - See 4.1

1. Remove the burner - See 4.3.4.
2. Use a 13mm (A/F) or ½" (A/F) socket spanner to remove the injector.
3. Unscrew the injector, use a new sealing washer on re-assembly.

If using a flat spanner to remove the injector see the next section (4.3.6.)

4.3.6 Combustion Chamber Insulation 30 - 80 models

Gain General Access - See 4.1

1. The front insulation is accessible as the front is already off.
2. Remove the burner - See 4.3.4.
3. Remove the two screws securing the side and rear insulation assembly to the front of the chassis.
4. Pull the assembly forwards and away from the boiler. Replace insulation pieces as required, replace any securing clip if damaged.
5. Re-assemble in reverse order.

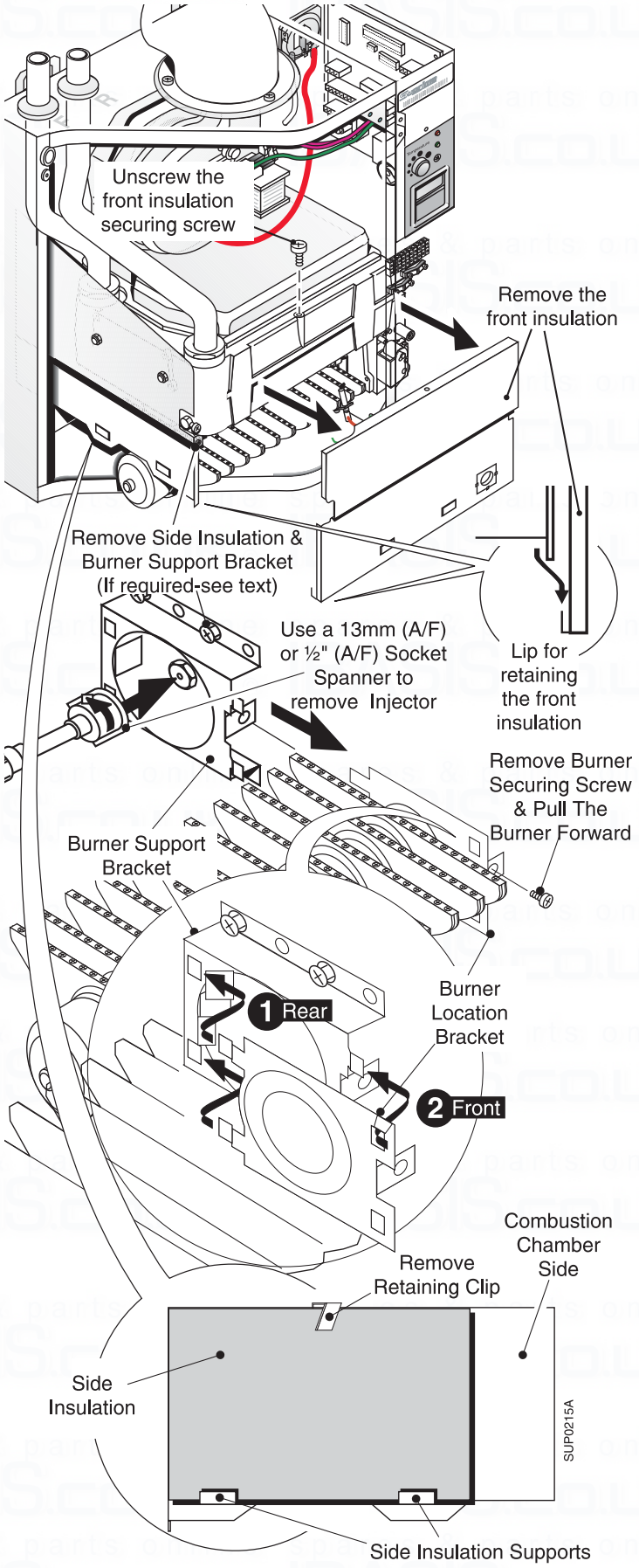

Fig. 17

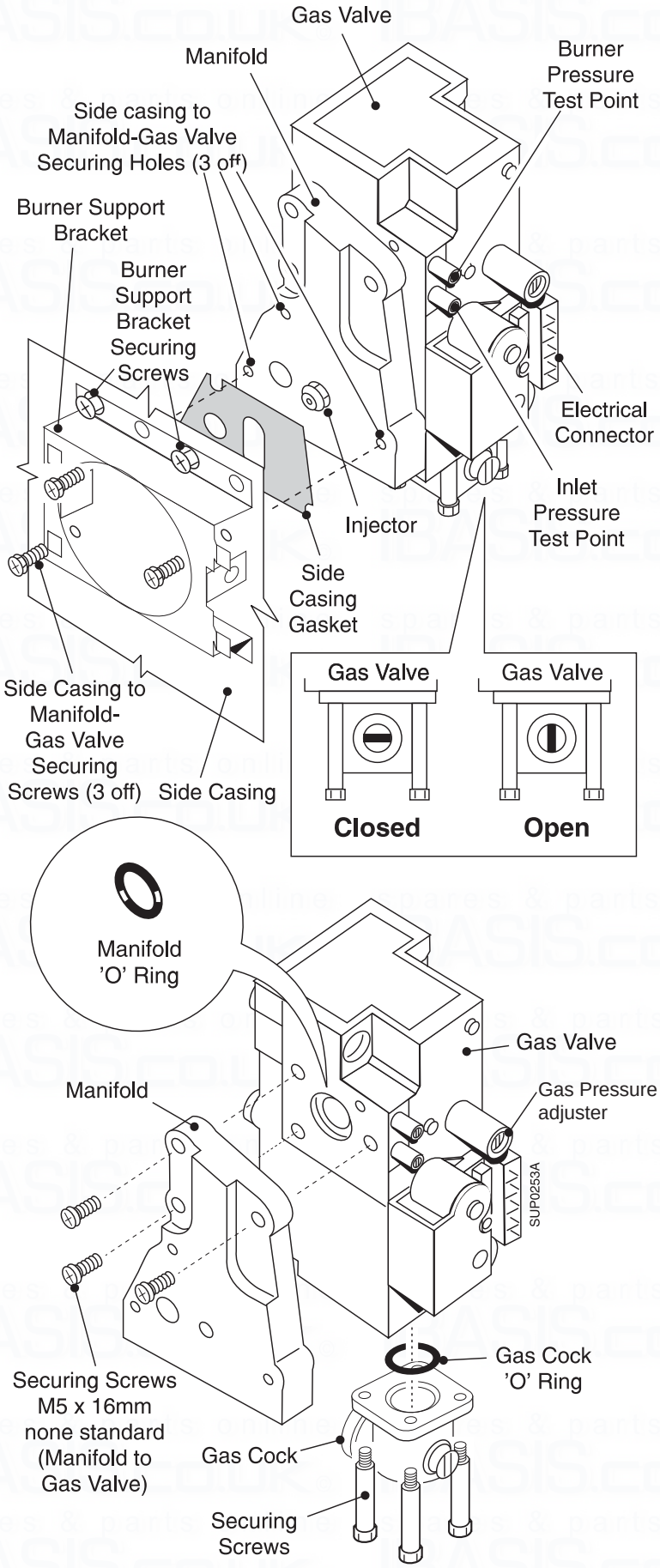

Fig. 18

4.3.7 Gas Valve 30 - 80 models

Gain General Access - See 4.1

1. Pull off the electrical connector at the valve.
2. Remove the gas cock by unscrewing the four long hexagonal head screws from the base of the valve.
3. Remove the burner - See 4.3.4.
4. Remove the screw securing the controls assembly to the top of the valve.
5. Remove the two screws securing the side and rear insulation assembly to the front of the chassis and remove assembly.
6. Remove the three screws securing the gas valve manifold assembly to the chassis and remove the complete assembly.
7. Remove the three M5 x 16mm screws securing the gas manifold to the gas valve.
8. Use a new 'O' ring and refit the manifold to the new gas valve.
9. Re-assemble in reverse order, use a new side panel gasket and 'O' ring in the gas cock.
10. Check that the burner pressure is in accordance with the information on the boiler data badge. If adjustment is required, turn the pressure adjusting screw anti - clockwise to increase pressure or clockwise to decrease.

4.3.8 Burner 100 model

Gain General Access - See 4.1

1. Disconnect the electrode lead and earth wire.
2. Undo the fixing screw, hold the burner at the right hand side. Pull forwards and to the left, disconnect from the air box and support tab.
3. Unscrew the electrode and transfer to the new burner.
4. Re-assemble in reverse order.
   Locate the left hand side of the burner onto the support tab on the side insulation. Hook the rear of the locating bracket (2) in place before locating the front (3) and re-fitting the screw.

4.3.9 Combustion Chamber Insulation 100 model

Gain General Access - See 4.1

1. The front insulation is accessible as the front is already off.
2. Remove the burner - See 4.3.8.
3. Remove the two screws securing the side and rear insulation assembly to the front of the chassis.
4. Pull the assembly forwards and away from the boiler. Replace insulation pieces as required, replace any securing clip if damaged.
5. Re-assemble in reverse order.

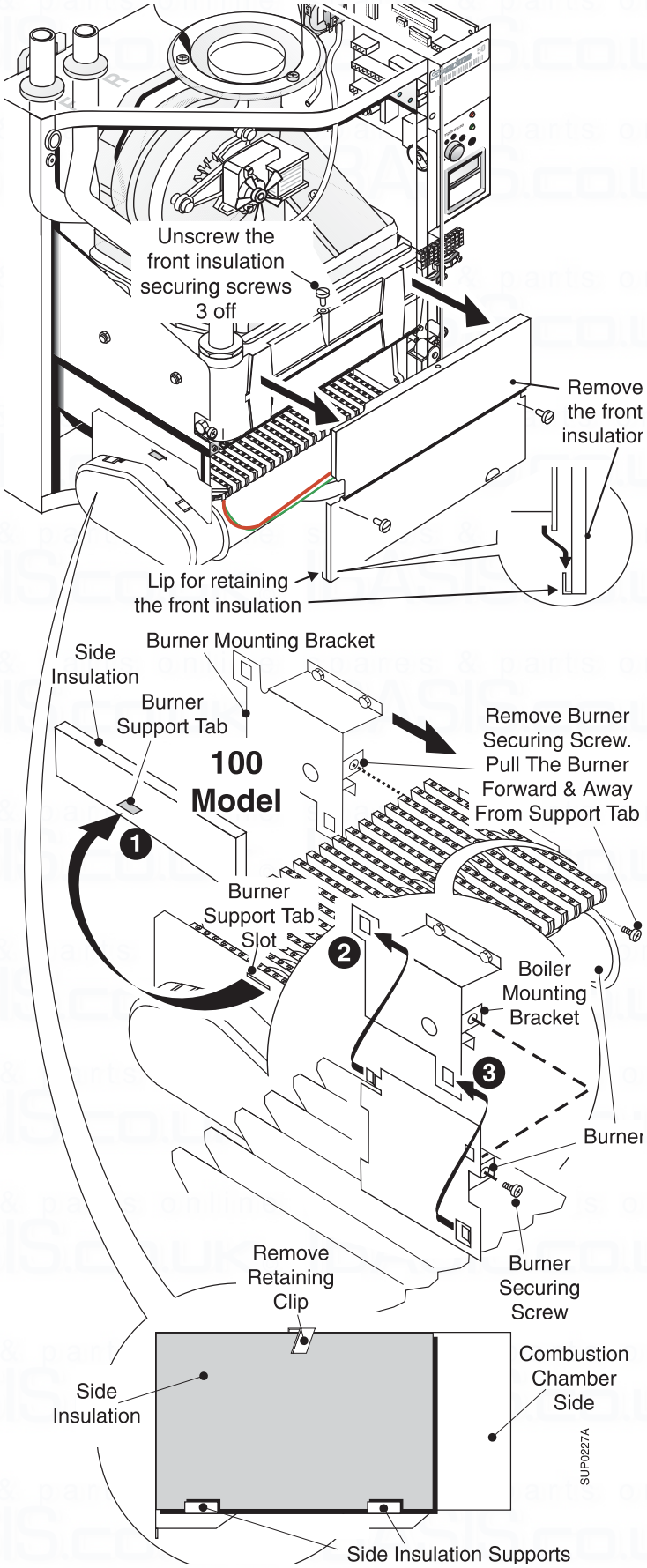

Fig. 19

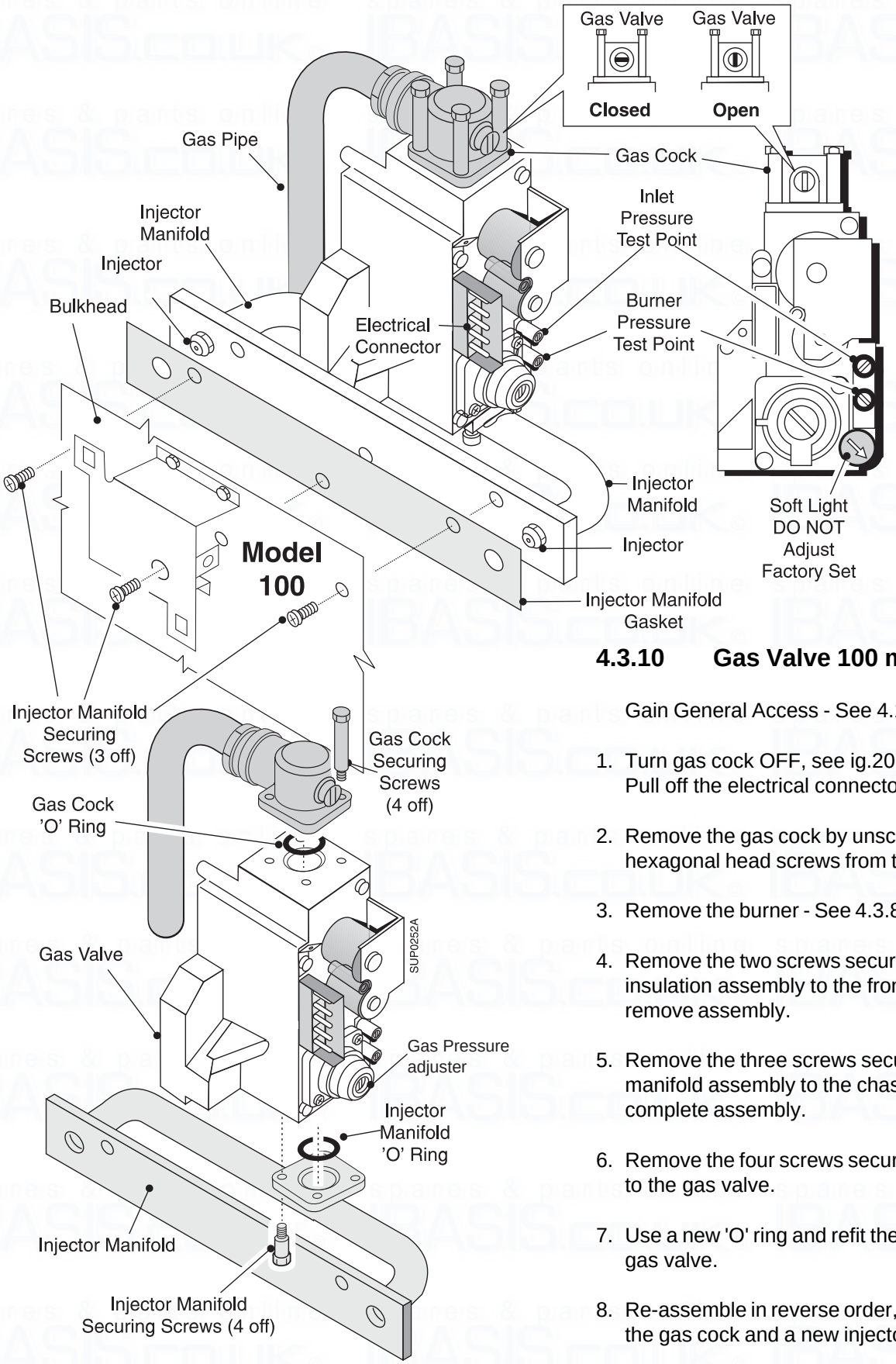

Fig. 20

4.3.10 Gas Valve 100 model

Gain General Access - See 4.1

1. Turn gas cock OFF, see ig.20.
   Pull off the electrical connector at the valve.

2. Remove the gas cock by unscrewing the four long hexagonal head screws from the top of the valve.

3. Remove the burner - See 4.3.8.

4. Remove the two screws securing the side and rear insulation assembly to the front of the chassis and remove assembly.

5. Remove the three screws securing the gas valve manifold assembly to the chassis and remove the complete assembly.

6. Remove the four screws securing the gas manifold to the gas valve.

7. Use a new 'O' ring and refit the manifold to the new gas valve.

8. Re-assemble in reverse order, use a new 'O' ring in the gas cock and a new injector manifold gasket.

9. Check that the burner pressure is in accordance with the information on the boiler data badge. If adjustment is required, turn the pressure adjusting screw anti - clockwise to increase pressure or clockwise to decrease.

4.3.11 Injectors 100 model

Gain General Access - See 4.1

1. Remove the burner - See 4.3.8.
2. Use a 13mm (A/F) or ½" (A/F) socket spanner to remove the injectors.
3. Unscrew the injector, use a new sealing washer on re-assembly.

4.3.12 Fan & Flue Hood

Gain General Access - See 4.1

1. Disconnect the tube from the front of the fan housing - note how it fits.
2. Disconnect the wires from the fan motor. 100 model only, loosen the baffle plate securing screw and remove the baffle plate.
3. Remove the three screws securing the fan to the flue hood.
4. Carefully pull the fan away from the boiler.
5. *Flue Hood:* On re-assembly ensure that the flue hood locates under the two brackets at the rear of the chassis. Check the seal and replace if damaged.
6. *Fan:* On re-assembly ensure that the rubber seal around the fan opening is located correctly into the base of the flue elbow.
7. Re-assemble in reverse order.

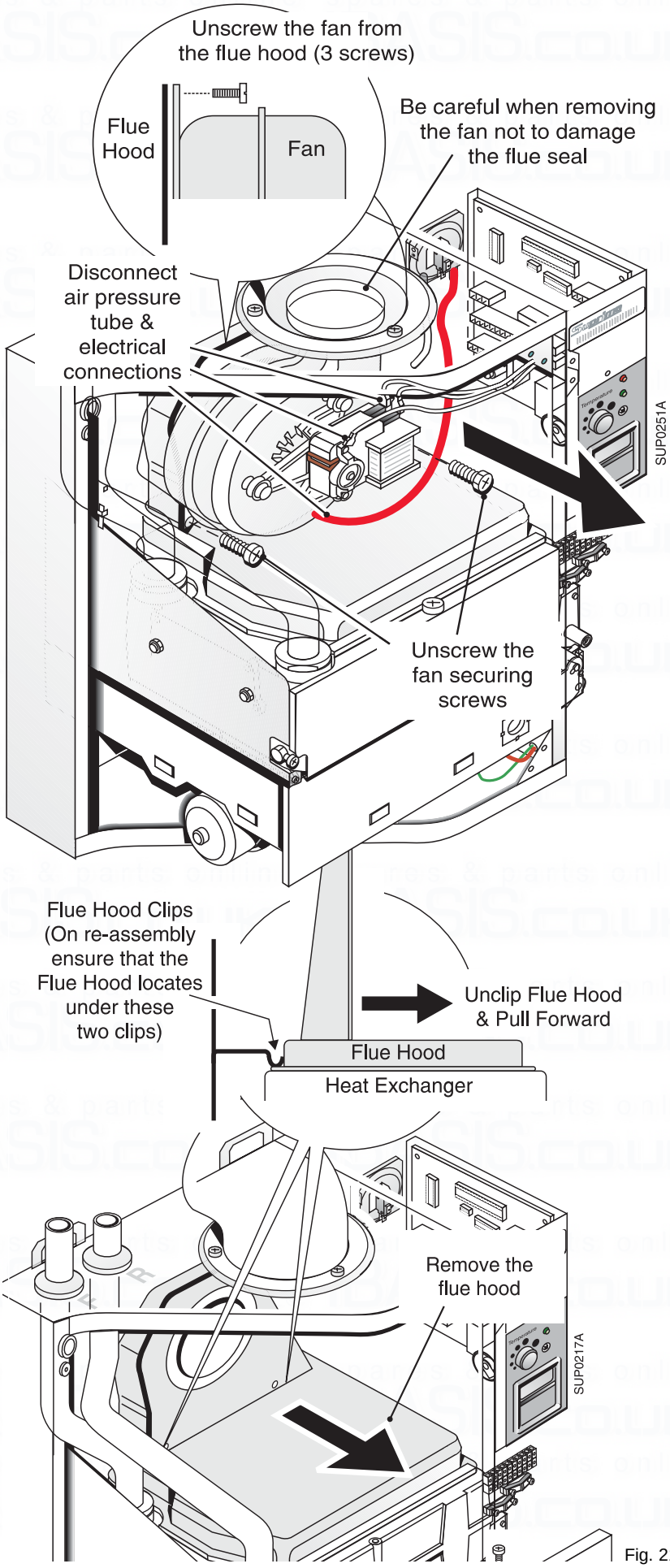

Fig. 21

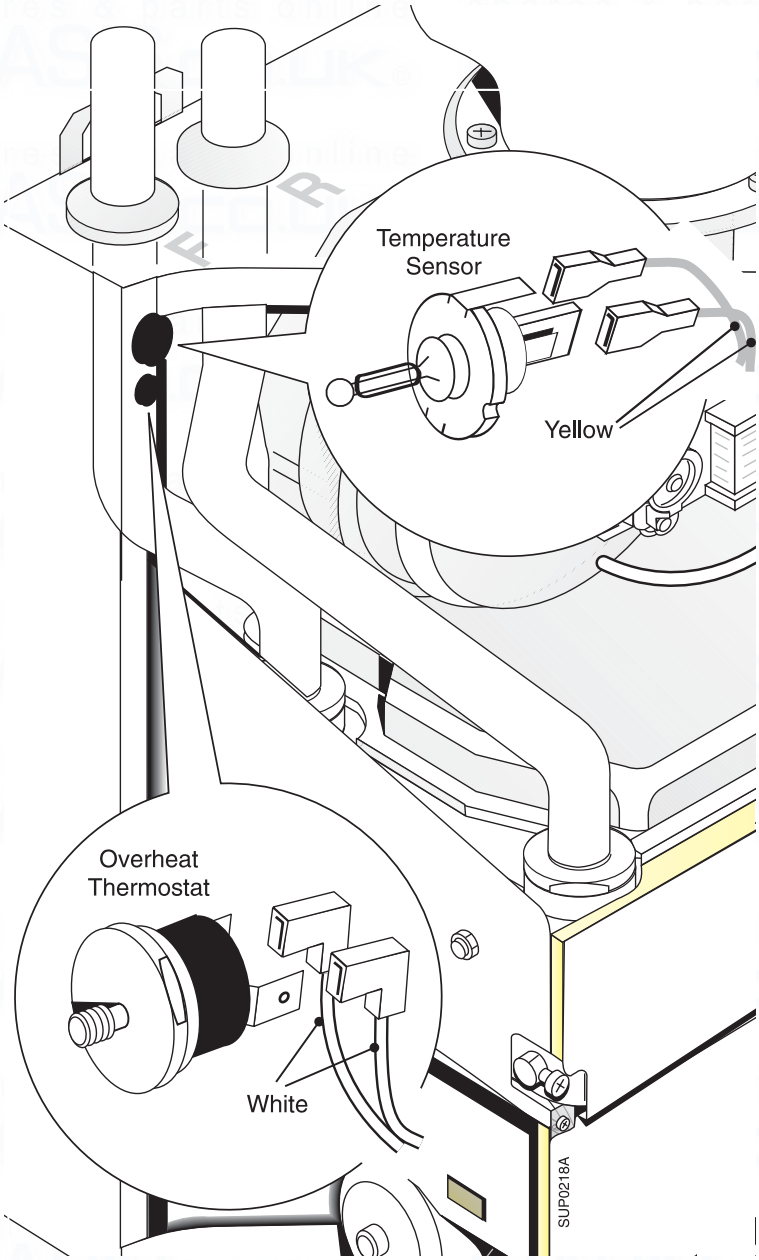

Fig. 22

4.3.13 Temperature Sensor

Gain General Access - See 4.1

1. Disconnect the wires from the sensor.
2. Depress the clips on the outside of the sensor and pull it clear of the pipe.
3. Re-assemble in reverse order, use fresh conducting paste.

4.3.14 Overheat Thermostat

Gain General Access - See 4.1

1. Disconnect the wires from the thermostat.
2. Unscrew the thermostat.
3. Re-assemble in reverse order.

4.3.15 Heat Exchanger

Warning:
For Sealed Systems relieve system pressure before draining.

Gain General Access - See 4.1.

1. Drain the system at its lowest point.
2. Remove the fan and flue hood - See 4.3.12.
3. Remove the burner - See 4.3.4. (30 - 80 models) or 4.3.8. (100 model).
4. Hold a suitable container under the left hand side of the heat exchanger and slacken the drain plug. Drain the heat exchanger and re-tighten the plug.
5. Remove the screws securing the combustion chamber insulation assembly to the chassis and withdraw it.
6. Release both the flow and return nuts at the top of the heat exchanger.
7. Support the heat exchanger, remove the four bolts (Two each side) and carefully remove the heat exchanger.
8. Replace rubber seals in flow and return ports, feed the new heat exchanger into position ensuring the pipe connections are correctly located.
9. Secure the heat exchanger with the four fixing screws and tighten the two sealing nuts.
10. Re-assemble in reverse order.

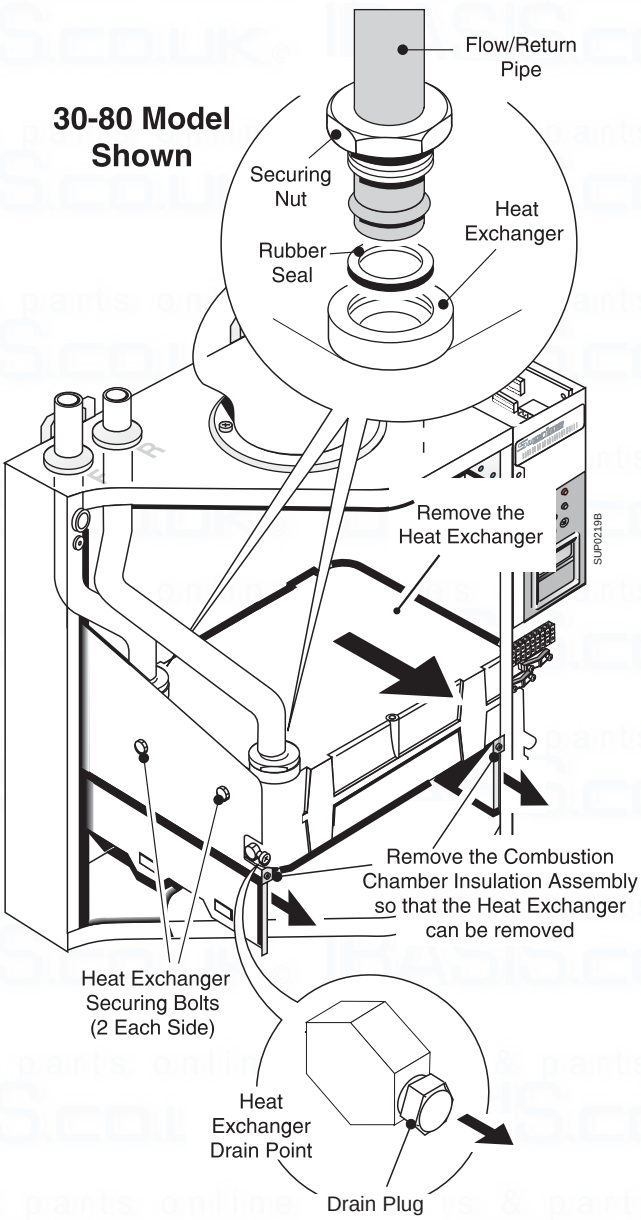

Fig. 23

5. Functional Wiring Diagram

Boiler Lighting Sequence

1. Supply external voltage to boiler terminal connections L and N, 230 volts, 50 HZ.
2. Supply external voltage to boiler terminal connection, switch line SW 230 volts, 50 HZ.
3. Pump live from boiler energised, diverter/zone valves operate in accordance with system demand.
4. Boiler control checks, air pressure switch for "No Air Condition" (red light "On", green light "Flashing").
5. If "No Air" the control switches on the fan.
6. After ten seconds air pressure switch proves fan is on.
7. Gas valves open and ignition for 3 seconds (green light flashes rapidly).
8. Boiler firing (green light "On" only).
9. If the flame is not detected at this time, the boiler will turn off.
10. The above sequence will repeat for a further two ignition attempts before going to lockout (indicated by the red light flashing).
11. Pressing the reset button will re-start boiler at No. 1.
12. The control will continue to run the pump for several minutes after any firing of the boiler.
13. The control will run the pump automatically for a few minutes every twenty four hours to maintain the free running of the pump.
14. The standby position on the thermostat control knob will prevent the boiler firing but will permit operation of the pump for sequences 12 and 13.

Key Colours:

br = Brown	o = Orange
bk = Black	b = Blue
v = Violet	w = White
r = Red	g/y = Green /Yellow
y = Yellow	g = Green

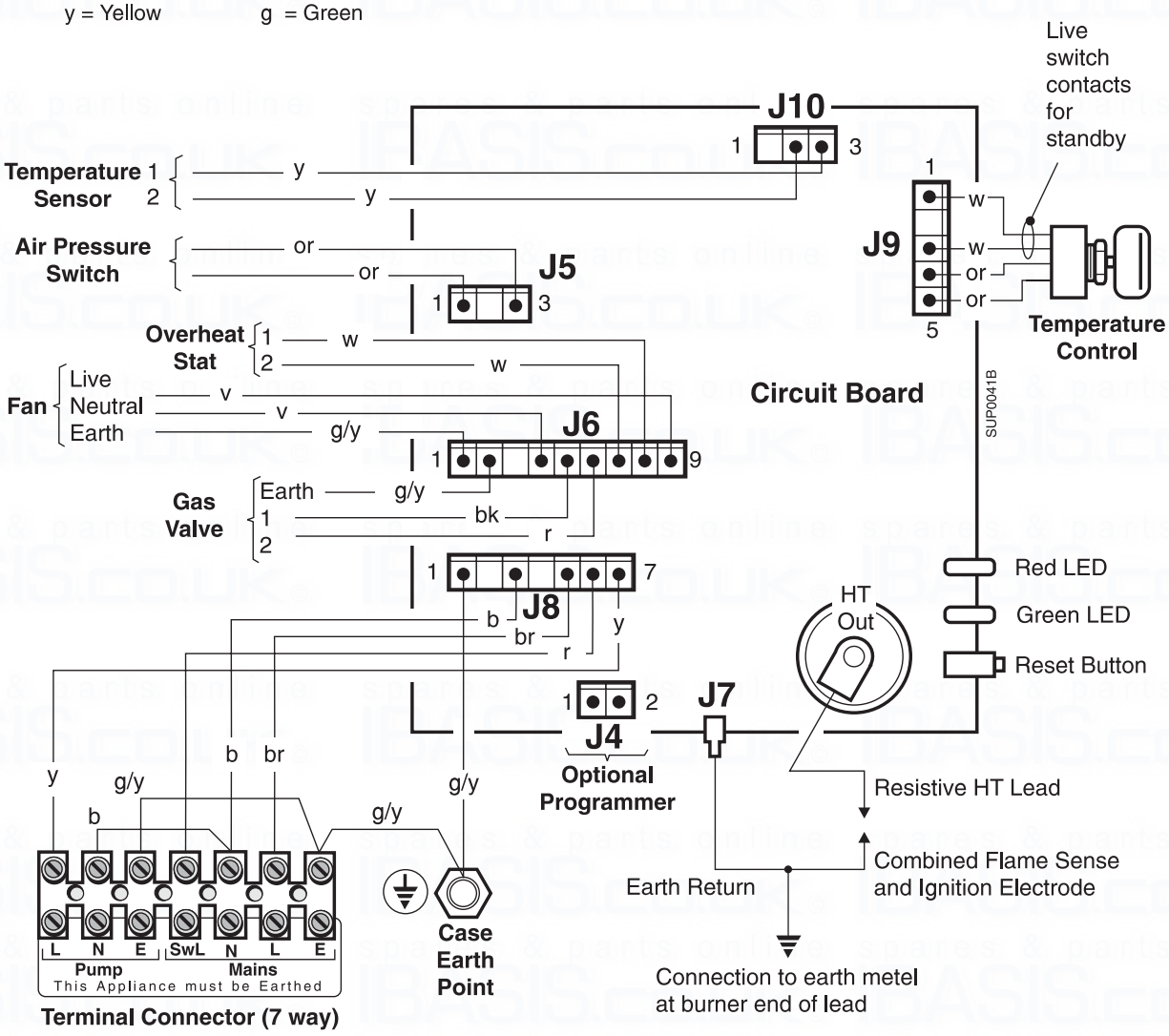

Fig. 24

6. Wiring Diagram

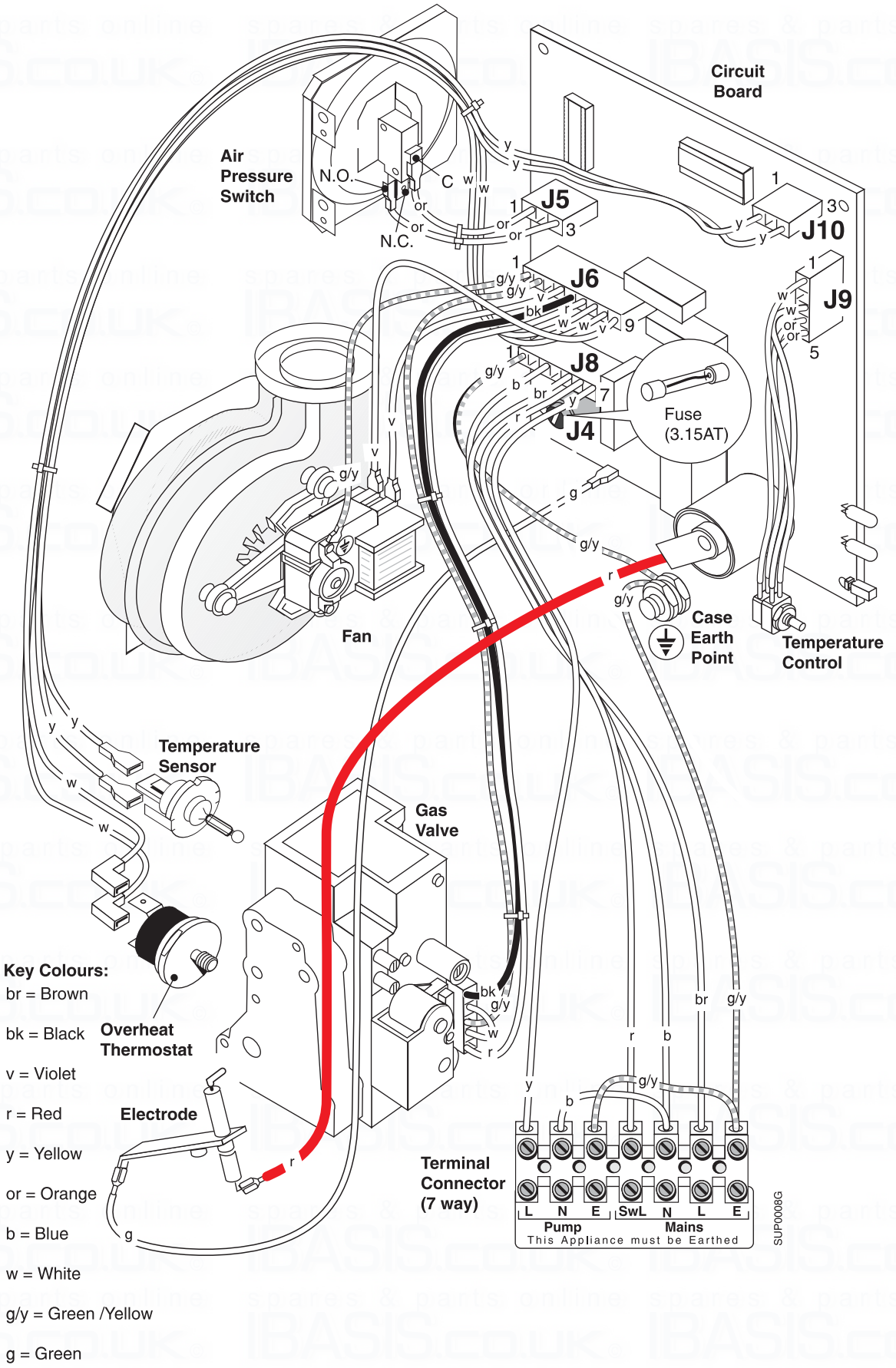

Fig. 25

7. Fault Finding Guide

Sequence of Events

1. On start-up boiler checks that
   a. The reset button is not stuck ON
   b. The Live and Neutral are not swapped
   c. There is no Pump Live wiring fault
   d. The gas valve is not energised
   e. There is no flame detected

Note: If there is a fault the Control will go to lockout

2. Control continues to hold gas valve open until either the set temperature is reached or the switch live demand is removed

3. Pump remains energised whilst there is a demand

4. Setting control thermostat to 'O' has the same result as reaching the set temperature

5. Control checks that flame is not detected

6. Control re-starts ignition sequence

Check list in the event of a fault

1. Switched Live call for heat is recognised by the Control but as boiler control thermostat is set to 'O' the ignition sequence is not started

2. Flashing Green indicates a call for heat to the user

3. Control thermostat set to call for heat

4. Control starts ignition sequence, Air Pressure Switch is checked for open circuit

5. Fan is energised

6. If APS fails to operate control goes to Blocking error (Red light flashes but *no need* to press reset). Control waits for APS to operate before energising gas valve and starting EHT spark

7. Control checks gas valve is energised. If valve is not energised overheat thermostat may be faulty

8. Control checks for flame detection within 3 seconds, if a flame is not detected the fan is turned off and the ignition sequence is restarted for two further attempts from '4'

Intermittent Lockout - Main causes are:

Switch Live connected to Pump Live
Poor burner ignition due to gas pressure
Poor burner ignition due to incorrect spark gap
Slow opening gas valve after a long standby period
Weak spark due to electrode lead or Control
Pre-pay gas meter running out

Other common reasons for complaint are:

Other system faults (actuator, room thermostat, timer)
Lack of user education in the operation of system control
System wiring faults affecting operation or temperature

Fault Finding Guide For 30-100 Models

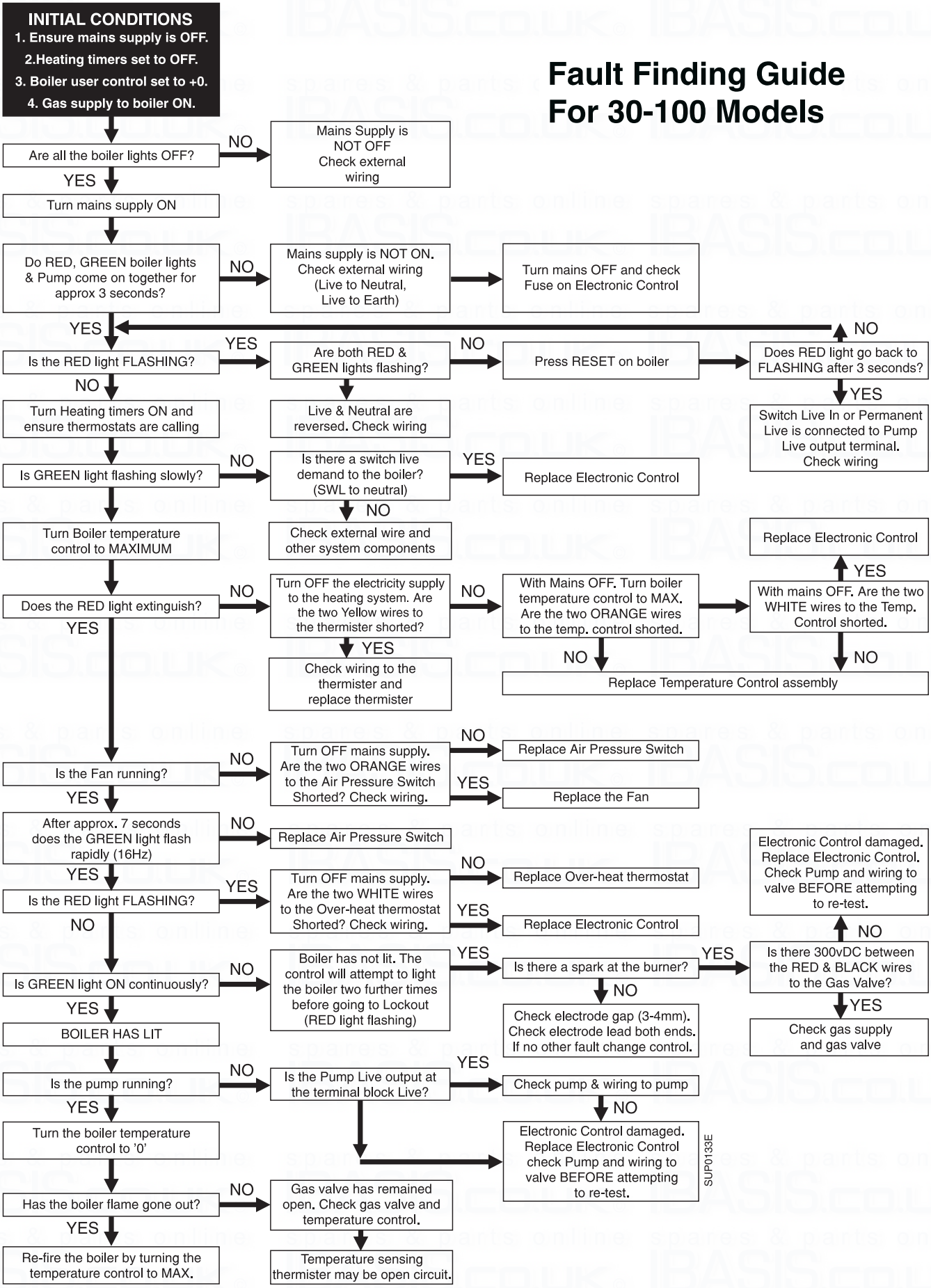

8. Short List Of Spare Parts

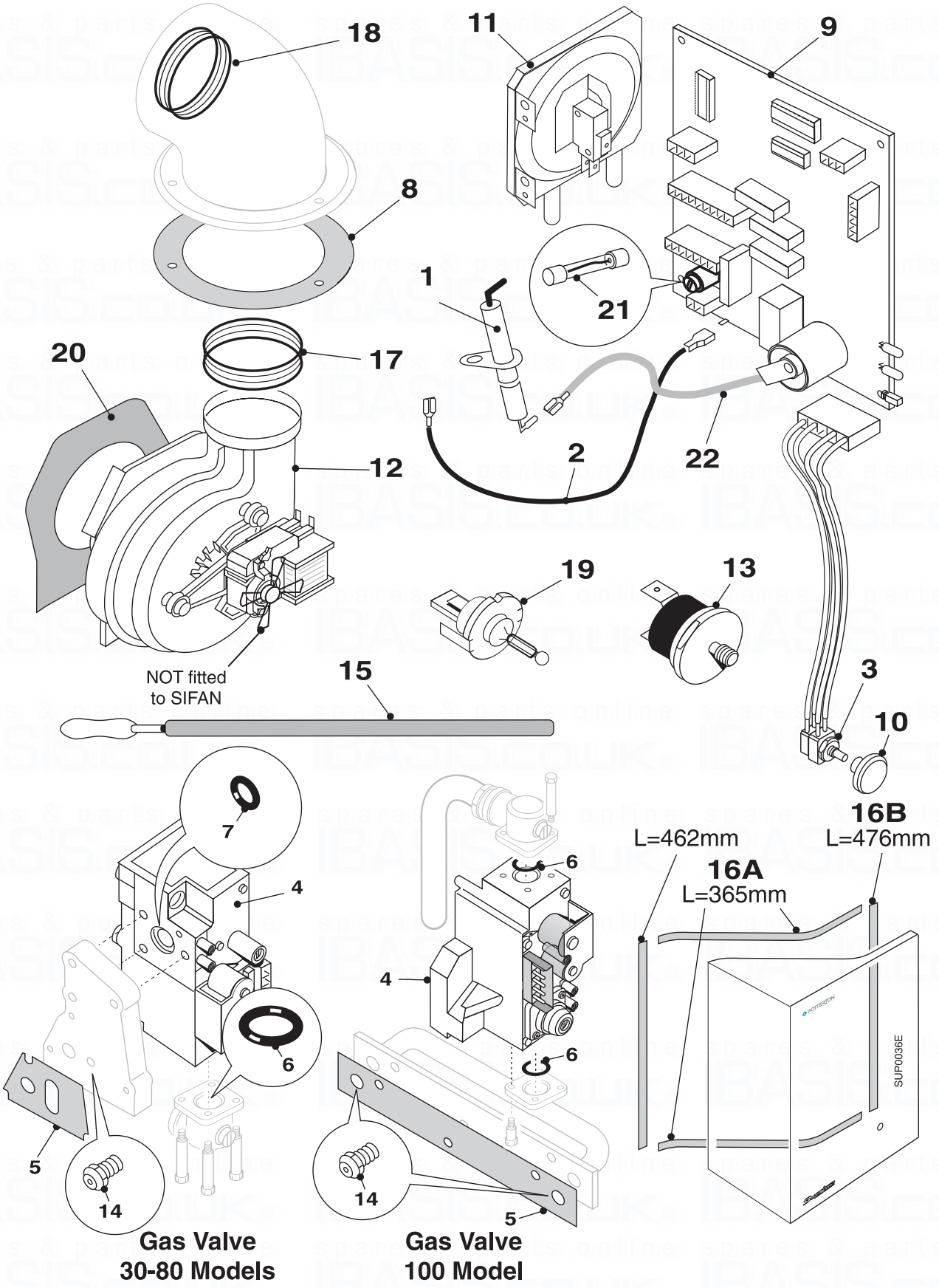

Fig. 26

Drg. Ref.	G.C. No.	Description		Qty.	Part No.
1	114 982	Electrode		1	8407754
2	114 860	Earth Lead 30 - 80 models		1	8238268
	114 861	Earth Lead 100 model		1	8238269
3	114 863	Temperature Control		1	8933012
4	173 132	Gas Valve 30 - 80 models		1	402550
	173 154	Gas Valve 100 model (soft light)		1	402552
5	114 832	Manifold Gasket - Case/Manifold 30 - 80 models		1	8238225
	114 833	Injector/Manifold Gasket - Case/Manifold 100 model		1	8388226
6	114 962	Manifold 'O' Rings - Gas Cock (Qty 2 off on 100 model)		1	8401648
7	114 963		- Manifold	1	8401656
8	114 945	Flue Elbow Seal		1	8238146
9	114 954	Circuit Board		1	8407750
10	114 864	Thermostat Knob		1	8238172
11		Pressure Switch	30, 60, 70 & 100 models	1	5105574
			40 model	1	5105575
			50 model	1	5105576
	173 155		80 model	1	5105867
12		Fan Assembly	30 to 40 models	1	5105900
			50 model	1	5105868
			60 to 70 models	1	5105901
			80 model	1	5105573
			100 model	1	5105902
13	173 130	Overheat Thermostat		1	8404517
14	173 133	Injector - Main Burner	30	1	8411021
	173 134		40	1	8411022
	173 135		50	1	8411023
	173 137		60 & 70	1	8411025
	173 138		80	1	8411026
	173 139		100	2	8411028
	337 862	Flue Scraper		1	907736
15	114 873	Front Panel Seal - Type 1		1	8650691
16	114 874	Front Panel Seal - Type 2		2	8650692
16a	114 875	Front Panel Seal - Type 3		1	8650693
16b	114 948	Fan Outlet Seal		1	8238147
17	114 949	Flue Tube/Elbow Seal		1	8238148
18	114 776	Temperature Sensor		1	8404516
19	114 810	Fan Gasket	- 30 to 50	1	8238163
20	114 811		- 60 to 100	1	8238165
	114 983	Fuse (Type: 3.15AT)		1	8160038
21	114 858	Electrode Lead 30 - 80 models		1	8407753
22	114 859	Electrode Lead 100 model		1	8407756

Flue Kits

Installation instructions included as necessary with each kit.

Concentric Vertical Flue Kit:
Sales Code: SUPKITD ■

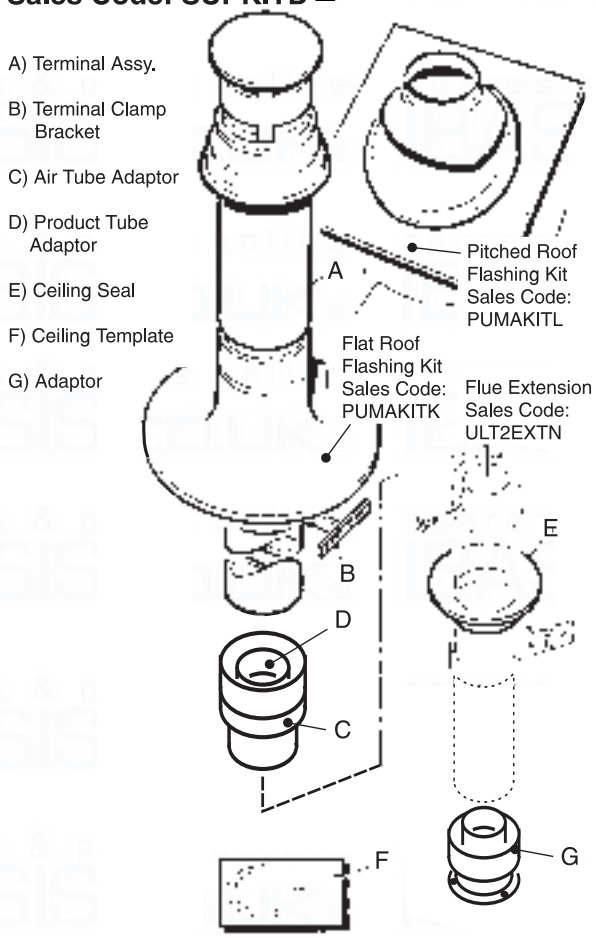

Twin Tube Vertical Flue Kit Sales Codes:
30L, 60L, 70L Models 5106363
40L Model 5106364
50L Model 5106365
80L Model 5106366
(Not 100 models)

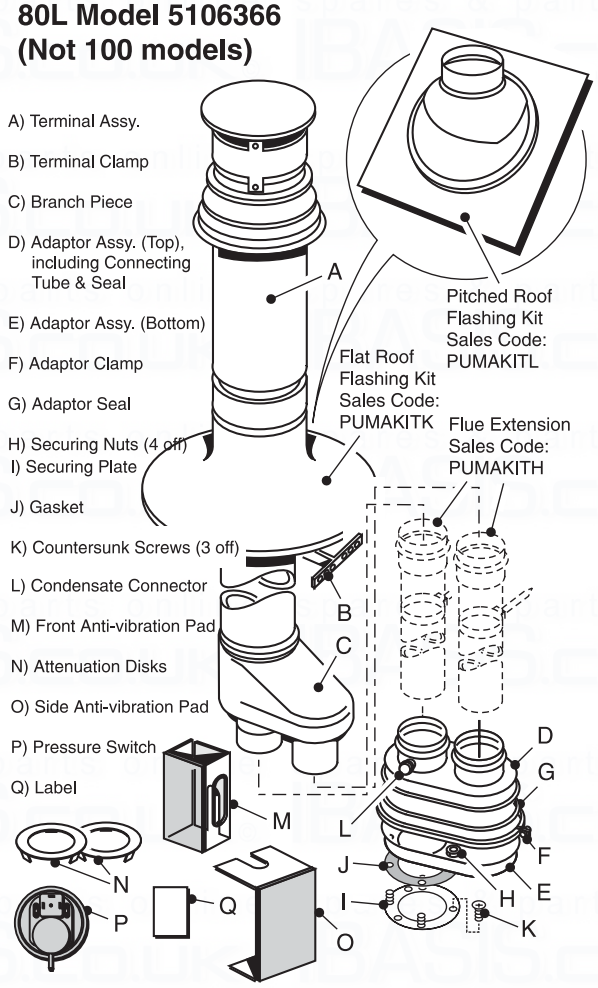

Telescopic Horizontal Flue Kit:
Sales Code: 1SUPFLUE
(up to 300mm) Standard

Sales Code: 2SUPFLUE
(up to 550mm) Alternative

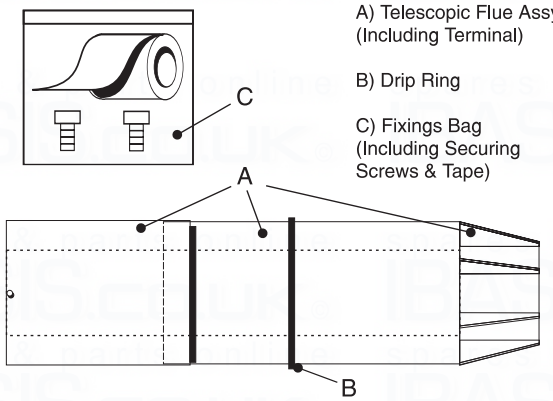

■ **Check availability of these kits before ordering**

SUP0275A

Fig. 27

■ **Check availability of these kits before ordering**

1m Flue Extension Kit (Max. 3 Kit)
Sales Code: ULT2EXTN
(Not 100 models)

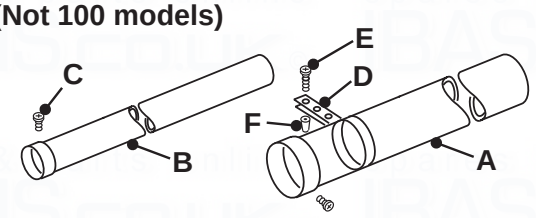

A) Extension Air Tube (Outer)
B) Extension Flue Tube (Inner)
C) Self Tapping Screws (6 off)
D) Fixing Bracket
E) Woodscrews (2 off)
F) Wall Plugs (2 off)

Flat Roof Flashing Kit ■
Sales Code: PUMAKITK

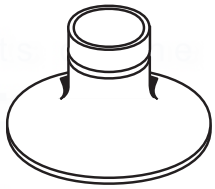

Pitched Roof Flashing Kit ■
Sales Code: PUMAKITL

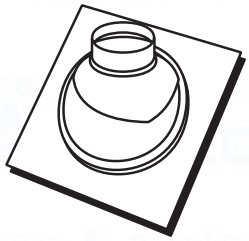

90˚ In-Line Bend Kit
Sales Code: PUMAKITB
(Not 100 models)

135˚ In-Line Bend Kit
Sales Code: PUMAKITC
(Not 100 models)

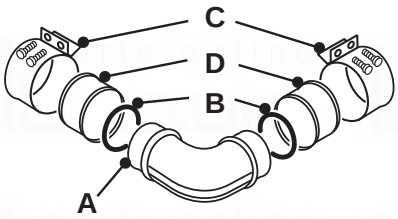

A) 90˚ or 135˚ In-Line Elbow
B) Product Tube 'O' Ring (2 off)
C) Air Tube Clamp (Including Nuts & Screws)
D) Air Tube Seal (2 off)

Min. Offset Flue Kit
Sales Code: 3SUPKIT

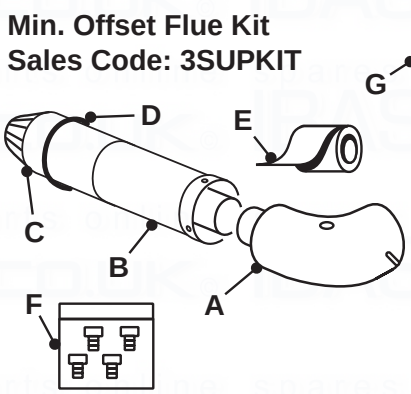

A) Terminal Elbow
B) Terminal Adaptor
C) Terminal Assem.
D) Drip Ring
E) Sealing Tape
F) Screw Pack
G) Wall Template

Concentric Vertical Flue Adaptor Kit
Sales Code: SUPKITC ■

(Not 100 models)

1m Twin Tube Flue Extension Kit ■
Sales Code: PUMAKITH
(Not 100 models)

A) Extension Tubes (2 off)
B) Fixing Brackets (2 off)

Twin Tube 90˚ In-Line Bend Kit ■
Sales Code: PUMAKITI
(Not 100 models)

A) 2 off- 90˚ In-Line Bend

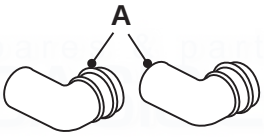

Wall Plate Pack
Sales Code: SUPKITB

Twin Tube135˚ In-Line Bend Kit ■
Sales Code: PUMAKITJ
(Not 100 models)

A) 4 off-135˚ In-Line Bend

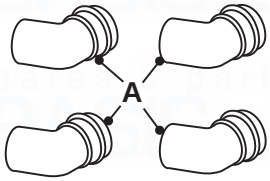

Internal Fitment Kit
Sales Code: SUPKITA

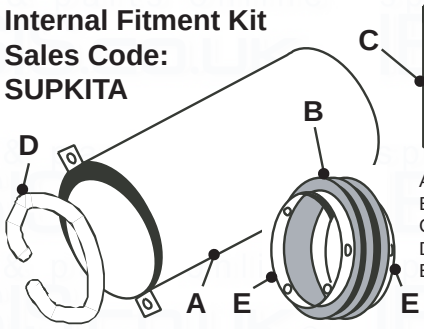

A) Flue Liner
B) Rubber Seal
C) Screws & Plugs
D) Rope
E) Retaining Collars

Terminal Guard
Sales Code: PTERMGUARDEF

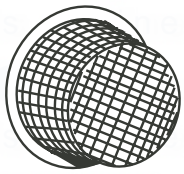

Telescopic In-Line Bend Adaptor
Sales Code: SUPKITR
(Not 100 models)

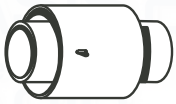

SUP0038D

Installation instructions included as necessary with each kit.

Fig. 28

System and Other Kits

Installation instructions included as necessary with each kit

Suprima System Kit
Sales Code:

SUPSYSKIT
(*Items not included in this kit)

SUPSYSKITDV
(Complete kit shown below)

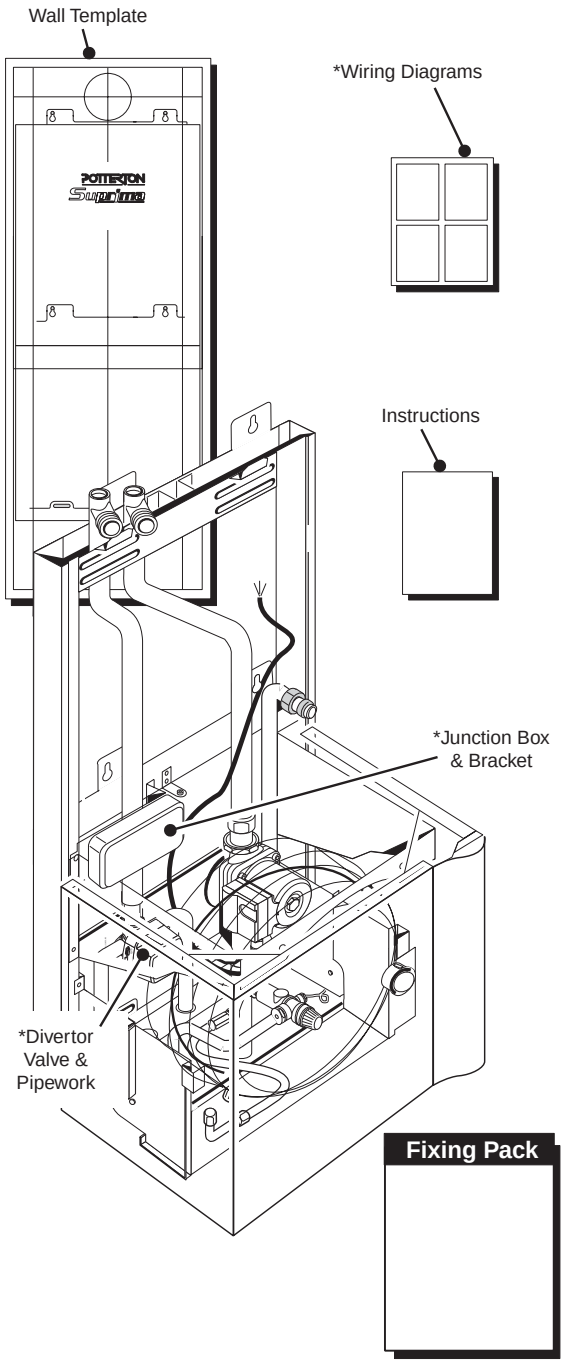

Top Feed System Pipework
(only for SUPSYSKIT)

Sales Code:
SUPSYSKITTOP

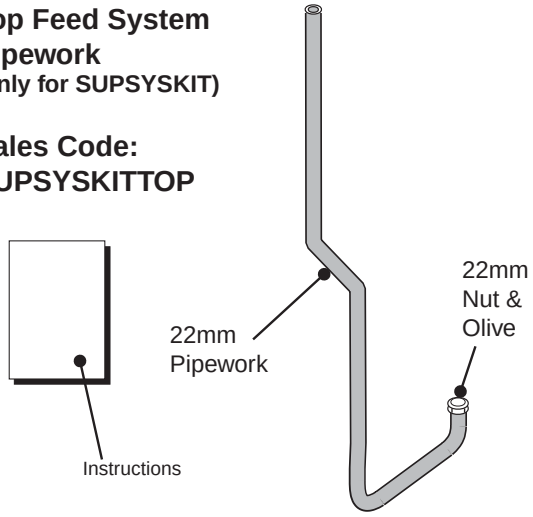

System Pod Kit ■
Sales Code:
SUPSYSPODA (Internal Fitment Kit, Pod Kit & Isolation Cock)
SUPSYSPODB (Pod Kit only)
SUPSYSPODC (Pod Kit & Isolation Cock)

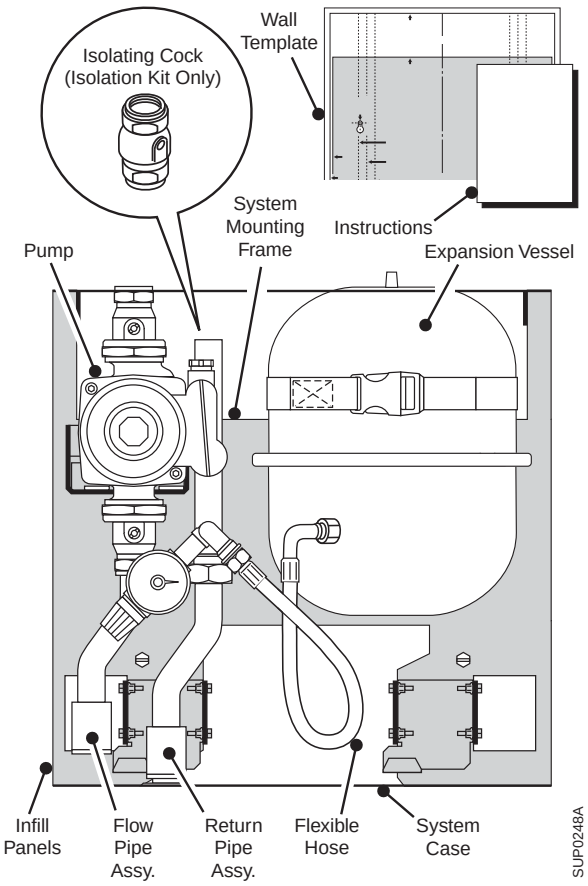

■ **Check availability of these kits before ordering**

Fig. 29

■ **Check availability of these kits before ordering**

Flue Turret Cover
Sales Code:
SUPKITI

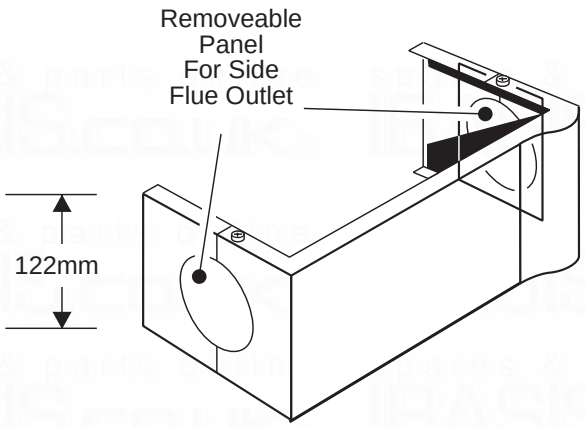

Boiler Stand Off Kit
Sales Code:
SUPKITJ

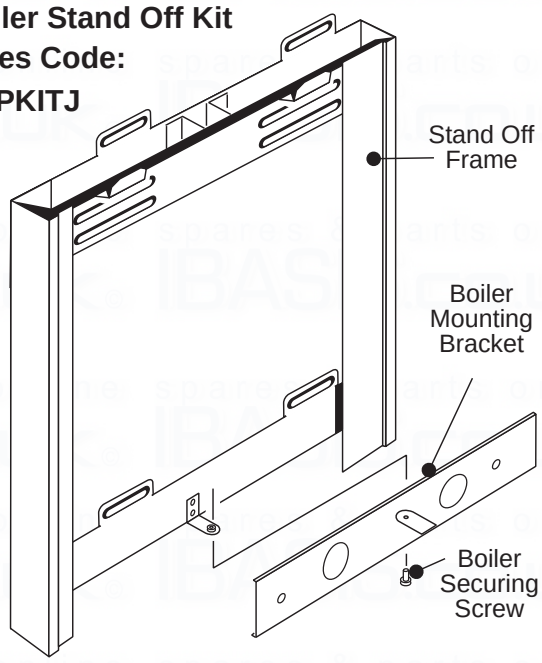

Programmer Kit ■
Sales Code: SUPKITH

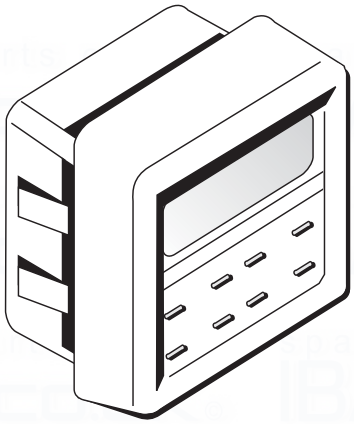

Anti-theft Kit
Sales Code:
SUPKITP

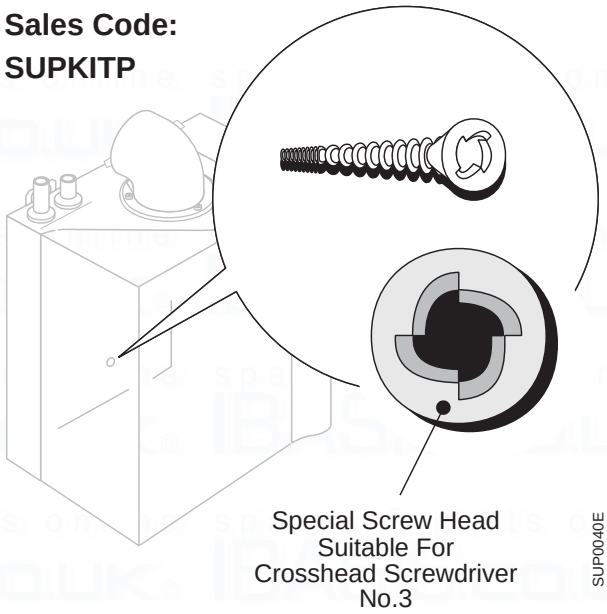

Installation instructions included as necessary with each kit.

Fig. 30

Intentional Blank

Intentional Blank

Publication No. 5102696 - Iss. **02** (12/2001)

General Enquiries
Tel. 08706 060 780

Technical *
Tel. 08706 049 049

Service *
Tel. 08706 096 096
Fax. 01926 410 006

Literature Request
Tel. 08706 060 623

* To aid continuous improvement and staff training, calls to this line may be monitored or recorded.

All descriptions and illustrations provided in this leaflet have been carefully prepared but we reserve the right to make changes and improvements in our products which may affect the accuracy of the information contained in this leaflet. All goods are sold subject to our standard Conditions of Sale which are available on request.

POTTERTON

Baxi Potterton
Brownedge Road, Bamber Bridge
Preston, Lancashire
PR5 6SN

www.potterton.co.uk

POTTERTON

User's Guide

Suprima
30L - 120L
and System L

About the Boiler

This is a Wall Mounted Fan Assisted Balanced Flue Gas Boiler.
This boiler is for use with Natural Gas (G20) only at 20mbar and for use in GB & IE.
Your boiler is fully automatic in operation and requires very little attention apart from setting the thermostat.

About Safety

- The Gas Safety (Installation and Use) Regulations 1998.
- This Appliance Must be installed and serviced by a Competent Person as stated in the above Regulations.
- If it is known or suspected that a fault exists on the appliance, it must not be used until the fault has been corrected by a competent person.
- If the appliance is installed in a compartment, do not use it for storage purposes. Do not obstruct any purpose provided ventilation openings.
- If a gas leak or fault is suspected turn off the appliance and consult your Local Gas Region or Service Engineer.
- Any warning labels on the appliance must be adhered to.
- **Consumer Notice:** Please make sure you have carried out the simple checks detailed in these instructions before asking for a Service Engineer to call, as a charge will be made for a service call if it is not due to a manufacturing fault on the appliance.
- The appliance should have the following minimum clearances for Safety and Maintenance, 15 mm at the front (610 mm for servicing access), 5 mm each side, 50 mm at the bottom and 125 mm above the case. Flammable materials must not be stored in close proximity to the boiler. Ensure that the flue terminal, outside the house, does not become obstructed, particularly by foliage.
- Potterton is a member of the Benchmark initiative and fully supports the aims of the programme. Benchmark has been introduced to improve the standards of installation and commissioning of central heating systems in the UK and to encourage the regular servicing of all central heating systems to ensure safety and efficiency.

benchmark™

The Benchmark Log Book is an important document and must be kept safely with the boiler. Failure to install and maintain this appliance in accordance with the manufacturer's instructions may invalidate the warranty.

You should ensure that your installer/service engineer completes the relevant sections of the log book when appropriate.

- Samples of the Suprima boilers have been examined by Gastec, a United Kingdom Notified Body. The range is certified to comply with the essential requirements of the Gas Appliance Directive 90/396/EEC, the Low Voltage Directive 72/23/EEC and shows compliance with the Electro Magnetic Compatibility Directive 89/336/EEC, the Boiler Efficiency Directive 92/42/EEC and are therefore permitted to carry the CE Mark.

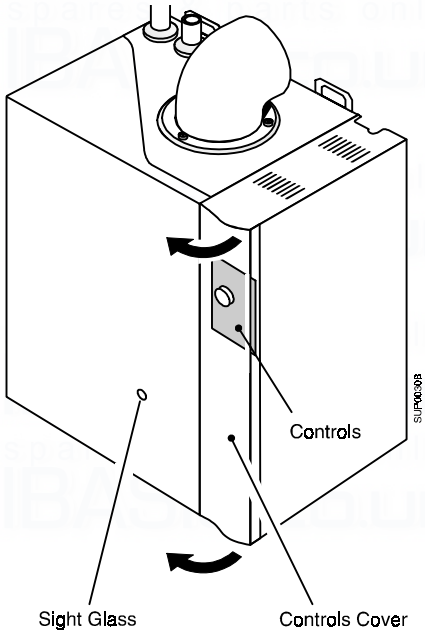

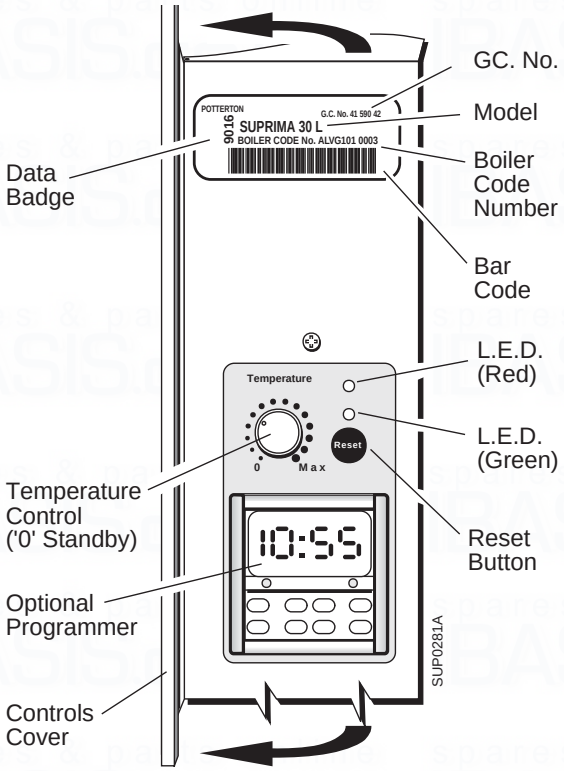

SEDBUK Declaration for Suprima

Model	Seasonal Efficiency (SEDBUK) (%)
30L	78.0
40L	78.5
50L	78.1
60L	78.1
70L	78.7
80L	78.8
100L	78.0
120L	78.7

This value is used in the UK Government's Standard Assessment Procedure (SAP) for energy rating of dwellings. The test data from which it has been calculated have been certified by 0063.

Warning

Do not interfere with any sealed components on this appliance

It is important that the case of this appliance is not removed for any reason other than for servicing by a qualified service engineer.

The appliance must not be operated without the casing correctly fitted and forming an adequate seal.

Avoid skin contact when the boiler is in operation, as some surfaces may get hot i.e. sight glass, pipework.

To Light

Note: When the boiler is first operated, there may be a slight smell. This will disappear with use.

1. Ensure that the boiler thermostat knob is set at 'O' (fully anti-clockwise).
2. Switch ON the main electricity supply, the upper Red L.E.D. should be on.
3. Ensure the electronic programmer or other time control, if fitted, is in an 'ON' position (refer to the time control literature).
4. Ensure that any room and/or cylinder thermostats are at a high temperature setting.
5. Turn the boiler thermostat 'ON' and to the required setting and the lower Green L.E.D. will start to flash. After a short period, the lower Green L.E.D. will flash rapidly and then become constant as the boiler lights up. When the boiler reaches the temperature setting on the boiler thermostat, the boiler will switch off, the Red L.E.D. will come on and the Green L.E.D. will flash.
6. Set the time control and any thermostats to their desired settings.

Reset Button

If the boiler fails to light after three attempts it will lockout and the Red L.E.D. will start to flash. Press the reset button (*Do Not use excessive pressure*), the Red L.E.D. will stop flashing and the boiler will attempt to relight a further three times.
If the boiler will not light, then you should call your installer or maintenance contractor.

To Shut Off - Short Periods

Turn the boiler thermostat knob to 'O' (Standby) or switch the programmer to the 'OFF' position. To operate the boiler, simply turn the boiler thermostat to the required setting and switch the programmer 'ON'.

To Shut Off - Long Periods

Turn the boiler thermostat knob to 'O' (Standby), isolate the electrical supply at the isolating switch, or pull the electrical plug out of the wall socket.
Important: Read the section on Frost Precaution.

Temperature Control

This enables you to control the temperature of the water as it leaves the boiler and is also used for turning the boiler on and off. The control can be set between 'O' (Standby) and Max which corresponds approximately to a temperature range of 55 °C to 82 °C

During the summer months, when the boiler is only being used to supply stored domestic hot water and there is no independent hot water temperature control, the thermostat can be set to a low setting which will probably be hot enough for bathing or washing up requirements. For washing clothes a higher setting may be necessary.

In winter weather, when central heating is required, the thermostat knob can be turned up higher but it must be remembered that unless the temperature of the water in the domestic hot water cylinder is independently controlled, the stored hot water could be at a temperature that could scald.

Pump Overrun

The boiler controls operate the pump for several minutes after the shut down of the boiler to prevent overheating. The boiler controls will also operate the pump for a few minutes every 24hrs, to maintain the free running of the pump.

Other Controls

A Potterton Electronic Programmer or other type of clock may have been fitted in your system, together with room and/or cylinder thermostats. Full instructions on the use of these controls should be supplied with them.

Important

Gas and electricity are required to operate your boiler. Its performance will not be affected by normal variation in either supply, but a gas or electricity failure will put the boiler out of operation. It will automatically re-start when the supply is restored provided that the time clock and/or thermostats are in the 'On' position.

Note: If the boiler is running and the gas is turned Off, the boiler will switch off and attempt to light twice, after which the Red L.E.D. will flash. The Reset Button will have to be pressed before the boiler will relight.

LED Indicators - Normal Modes

Status	Green LED	Red LED
Mains ON Only	OFF	ON
Ext. Call for Heat *(Boiler set to STNDBY, Temp. Control set to 'O' Off)*	FLASHING 2 Per Sec.	ON
Ext. Call for Heat *(STNDBY switch to ON, Temp. Control set to Max.)*	FLASHING 2 Per Sec.	OFF
Ignition *(i.e. Gas and Sparks ON)*	FLASHING 16 Per Sec.	OFF
FLAME Detected	ON	OFF
Boiler Temperature Control Satisfied	FLASHING 2 Per Sec.	ON
Lockout	OFF	FLASHING 2 Per Sec.

Overheat Limit Thermostat

The boiler is fitted with a safety thermostat to protect against overheating of the water. If this thermostat operates the boiler will lockout and the Red L.E.D. will start to flash. Press the reset button (*Do Not use excessive pressure*), the Red L.E.D. will stop flashing and the boiler will attempt to re-light. If the control does not reset, leave the boiler for approx. 15 minutes before pressing the reset button again.

If the problem persists, turn off the boiler and consult your Local Installer or Service Engineer. **Note:** Interruption of the electrical supply to the boiler may also cause the overheat thermostat to operate.

Having checked these points, run through the lighting procedure once more and if the boiler still fails to light, call in your Service Engineer.

Frost Precautions

If your boiler has to be shut down for several hours or more during very cold weather, it may be in danger of freezing, due to its position, i.e. it may be in an outhouse or part of the pipework may be vulnerable to frost. To avoid freezing, various methods of protection can be used:-

1. Insulation of the boiler and pipework, taking care not to impede any ventilation or air supply.

2. Completely draining the water system if not in use for long periods. On a sealed system, draining and refilling must be carried out by a competent person.

   Note: Although the system can be emptied by using the drain off taps installed in the pipework around the system, to empty the boiler, it is necessary to remove the drain screw which is situated on the heat exchanger casting. This should only be done by a competent person.

3. Have a low limit thermostat fitted. If the system is fitted with a low limit thermostat and protection of the system is required during cold weather, all that is required is for the programmer to be turned to the 'Off' position. This will allow the boiler to operate if the temperature within the house becomes too low. The low limit thermostat will not operate if the boiler is completely shut down and the electricity supply turned off. In this instance, the system will have no protection and one of the other methods must be used.

4. Where no frost protection is provided it may be necessary to run the boiler at low thermostat settings at all times when it would normally be shut off.

Cleaning the Outside of the Boiler Casing

The outside of the boiler casing can be wiped when necessary by using a damp cloth to remove finger marks etc. Do not use an abrasive cleaner as this may damage the casing finish.

Information for the Suprima System Boiler

The system water pressure should be checked periodically. This is done by removing the lower cover, released by pulling forward at the base, to expose the pressure gauge. The gauge is situated on the right hand side of the pump. If the needle falls below the point indicated by the red marker, this shows water is leaking from the system and that it needs re-charging. Your installer can advise you on what to do with your particular system. Re-fit the cover into the spring clips after checking.

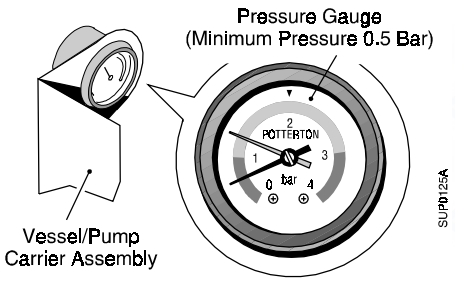

Publication No. 5102871 - Iss. **02** (02/2002)

Care Of Your Boiler and System During the Guarantee Period and Beyond:

1. Registration of Purchase

It is important to register the purchase of your Potterton boiler to ensure you receive prompt and efficient handling in the event your boiler requires attention during the guarantee period.

To register your guarantee simply complete and detach the Registration of Purchase form enclosed with these instructions. It is important to include details of your installer (if known) and to return the completed form to the Potterton Registration Department.

2. During the Guarantee Period

In the event of any problems with your system or the operation of the boiler, you should first **call your installer**. If there is a fault with the boiler under guarantee which your installer is unable to rectify, he/she will call Potterton Service Operations. For 12 months from the date of installation (or 18 months from the date of manufacture, which ever is shorter), Potterton will attend to any manufacturing defect, on the appliance only (not the system or ancillary controls), free of charge for parts and labour, subject to there being no misuse or abuse. This does not effect your statutory rights.

Service visits by Potterton Service Operations outside the terms of the boiler guarantee, will be charged for both parts and labour at our normal rates for chargeable work. During the period of the boiler guarantee, Potterton will only be responsible for the cost of work done by them or on their instructions by their Agent. We cannot accept any liability for expenditure or work done by other parties without our knowledge and/or approval.

3. Safety Check / Routine Maintenance

It is strongly recommended you have your boiler checked annually for safety and for routine maintenance. This should be carried out by a CORGI Registered Installer/Service Agent or Potterton Service Operations to comply with the requirements of the Gas Safety (Installation & Use) Regulations 1998.

4. Boiler Breakdown Insurance

We are pleased to offer you the opportunity to protect your investment once your initial boiler guarantee has expired, by the payment of an annual premium. You can continue with this insurance for the normal life of your boiler and you will find a special 30 day introductory offer for a second year cover together with a card to register your purchase, as part of the “User Pack” supplied with your boiler.

If you have not been handed a Registration Card/additional 2nd Year Breakdown Insurance offer, Please contact the Potterton Registration Department for a copy by telephoning (020) 8944 4972.

General Enquiries
Tel. 08706 060 780

Technical *
Tel. 08706 049 049

Service *
Tel. 08706 096 096
Fax. 01926 410 006

Literature Request
Tel. 08706 060 623

* To aid continuous improvement and staff training, calls to this line may be monitored or recorded.

All descriptions and illustrations provided in this leaflet have been carefully prepared but we reserve the right to make changes and improvements in our products which may affect the accuracy of the information contained in this leaflet. All goods are sold subject to our standard Conditions of Sale which are available on request.

POTTERTON
Baxi Potterton
Brownedge Road, Bamber Bridge
Preston, Lancashire
PR5 6SN

www.potterton.co.uk

interpart

A Trading Division of Baxi Heating UK Ltd.

Genuine Parts for
BAXI
POTTERTON
VALOR
MAIN
RANGE POWERMAX
WONDERFIRE
MYSON

Replacement PCB Kit

Kit Part Number 5111603

for use with

Potterton Suprima/Suprima L (30-100 models only)

The kit can be fitted to appliances with or without an integral water flow switch.

This document contains revised User, Commissioning and Fault Finding Instructions, a revised Wiring Diagram and Spare Parts list that replace the information shown in the User's Guide and Installation & Service Instructions originally supplied with the boiler.

User' Guide	Page 2
Replacement of Controls Assembly	Pages 3 - 7
Wiring diagram	Page 8
Spare parts	Page 8
Commissioning/Test Controls	Pages 9
Fault finding	Pages 10 - 15

To ensure correct identification on future service vists, it is essential that the data label is filled in as stated on Page 7. Failure to do so may invalidate any warranty.

Leave this document with the Installation & Service Instructions as it will be required for any future service visits.

Publication No. 5111665 - Iss. **03** (11/2004)

User's Guide

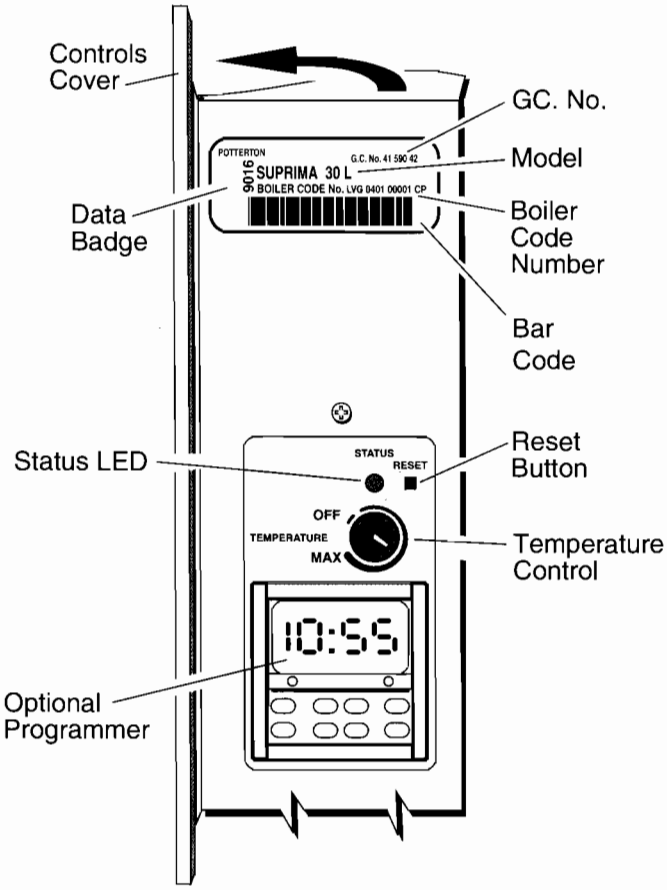

LED Indication

Status	LED
Mains Off	Off
Mains ON *No external call for heat*	Continuously Orange
External Call for Heat *Temperature Control set to Off*	Flashing Orange
Air Proving & Ignition	Flashing Orange/Green
Burner On	Continuously Green
Boiler Temperature Control Satisfied	Flashing Green
Lockout	Flashing Red or Continuously Red

Temperature Control

This enables you to control the temperature of the water as it leaves the boiler and is also used for turning the boiler on and off. The control can be set between 'Off' and 'Max' which corresponds approximately to a temperature range of 55 °C to 82 °C.

To Light

1. Ensure that the boiler temperature control is set at 'Off'.
2. Switch ON the main electricity supply, The LED will show a continuous orange light.
3. Ensure the electronic programmer or other time control, if fitted, is in an 'ON' position (refer to the literature supplied with it).
4. Ensure that any heating and/or hot water controls are at a high temperature setting (refer to the literature supplied with them).
5. Turn the boiler temperature control to the required setting and the boiler will light. The LED will show a continuous green light.
6. Set the time control and any thermostats to their desired settings.

Reset Button

If the boiler fails to light or the boiler is running and the gas is turned off, the LED will start to flash red. Press the reset button for a minimum of 1 and a maximum of 10 seconds (*Do Not use excessive pressure*), the LED will stop flashing and the boiler will attempt to relight.

If the button is pressed for more than 10 seconds the LED will flash red rapidly and will need to be reset again. If pressed for less than 1 second, the boiler will not reset.

If the boiler will not light it should be attended to by a competent person.

To Shut Off

Turn the boiler temperature control to 'Off' or switch the programmer to the 'Off' position.

To operate the boiler again, simply turn the boiler temperature control to the required setting and switch the programmer 'On'.

Replacement of Controls Assembly

Remove exisiting controls assembly

1. **Isolate both the gas and electrical supply to the appliance and ensure the appliance is cool before starting work.**

2. Open the side panel door and undo the panel retaining screw. Slide the side panel forward and remove.

3. Undo the two retaining screws and remove the outer white front case.

4. Note the position of mains and pump wires and disconnect them.

5. Disconnect the following:-
   a. 2 yellow wires to the thermistor on the flow pipe, (top).

   b. 2 white wires from the limit thermostat on the flow pipe (bottom).

   c. 2 violet wires and 1 earth wire from the fan motor.

   d. Disconnect the sensing tube from the fan, undo the 3 retaining screws and remove the fan.

   e. Unscrew the control panel retaining screw and allow the control panel to pivot forwards.

   f. Disconnect the 2 orange wires from the air pressure switch. If a flow switch is fitted disconnect, the white wire to the air pressure switch and the white wire to orange wire connection. If the flow switch is fitted internally on the boiler, draw the wiring harness through the side panel.

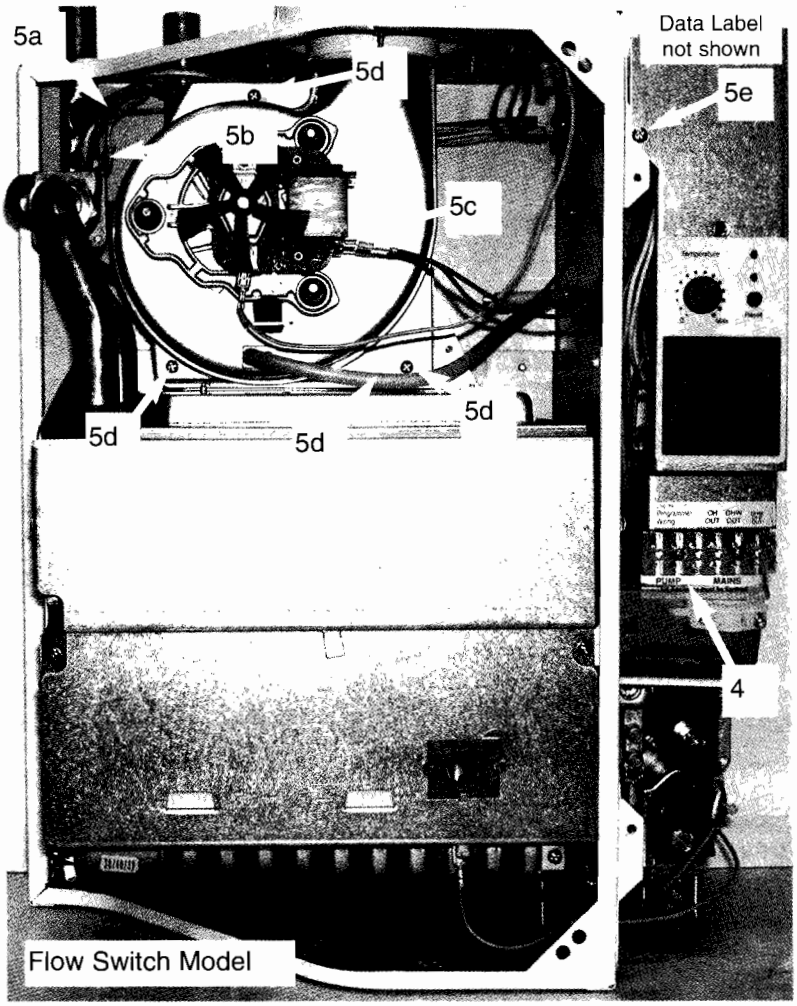

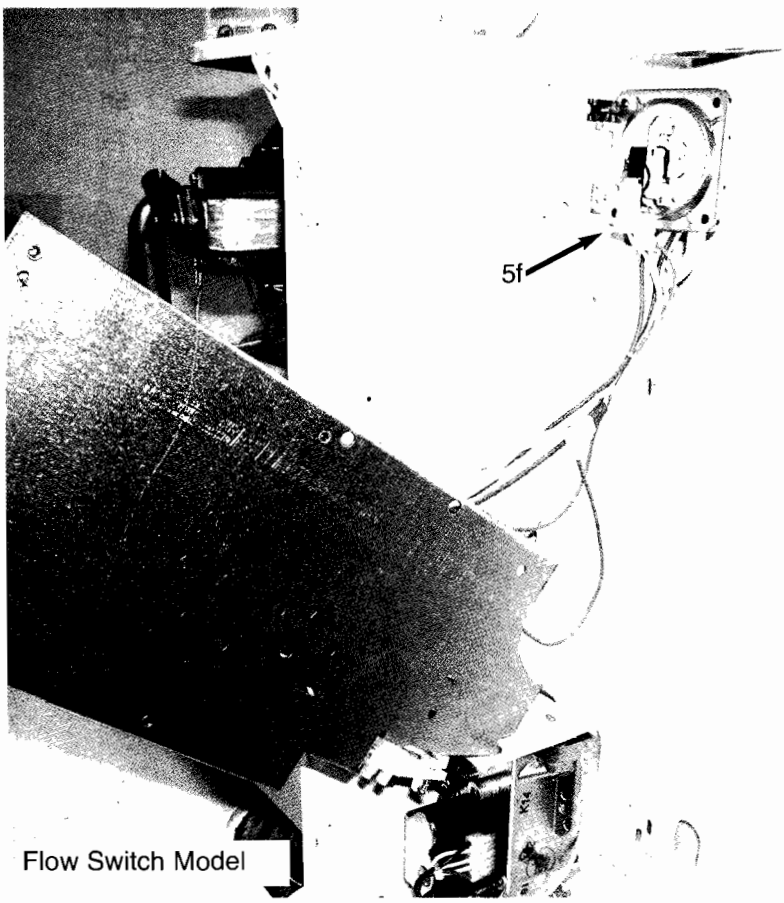

Replacement of Controls Assembly

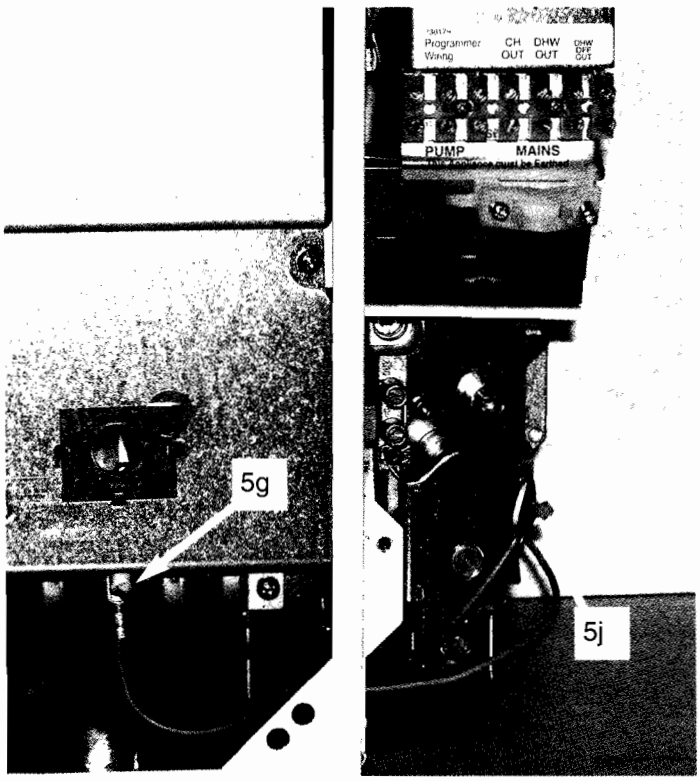

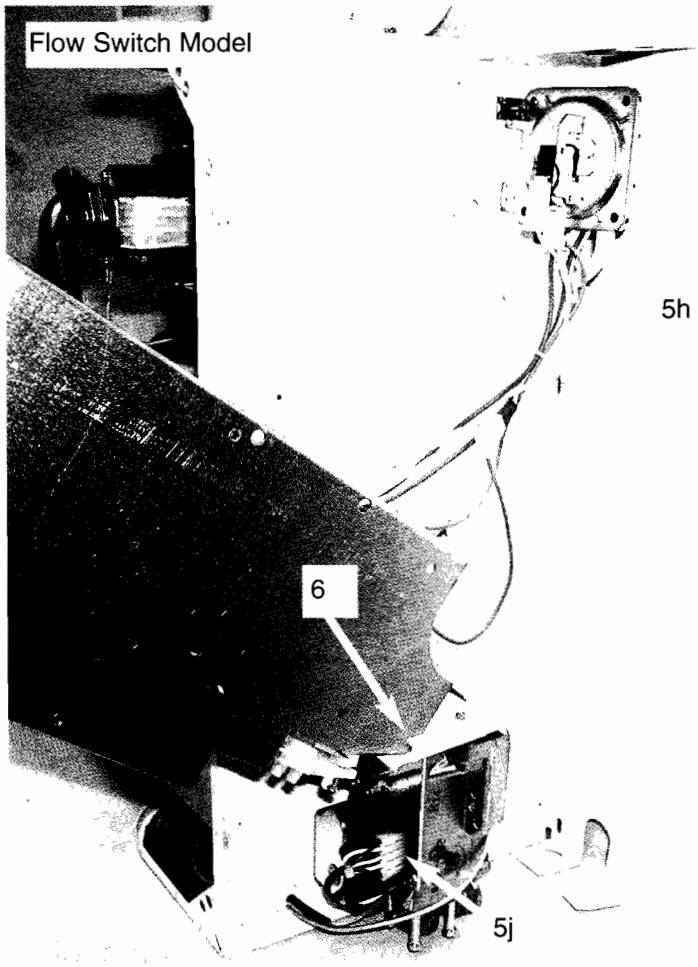

Remove exisiting controls assembly

g. Disconnect the earth wire and the spark electrode lead from the spark igniter and draw them through side panel hole (lower), also remove the white grommet.

h. Draw the fan,thermistor,and limit thermostat wires through the side panel hole (upper) and remove the red grommet.

   Removal of the air pressure switch may be necessary if access is restricted at the right hand side.

j. Remove the 'Molex' connector from the gas valve and cut the cable tie securing the lead to the chassis.

6. Remove the complete controls assembly by lifting into the vertical position to disconnect it from its lower mountings. If a integral timer is fitted, remove and fit to the new controls assembly.

Remove and re-fit integral timer

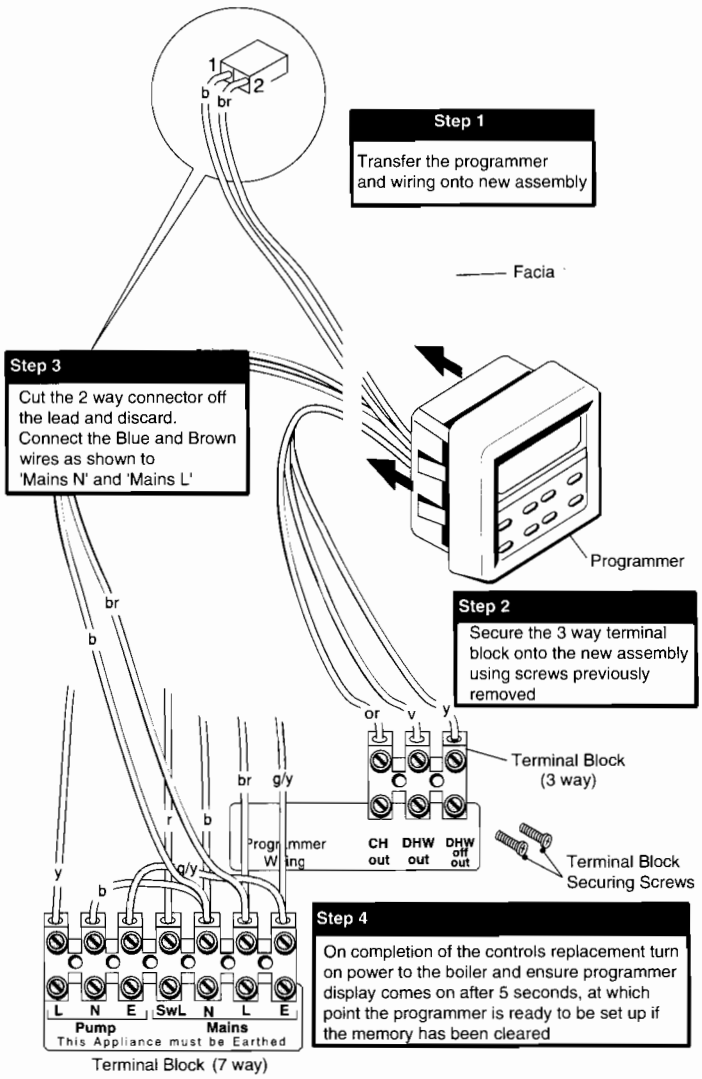

Replacement of Controls Assembly

Fit new controls

Important: For 30-80 models fit the shorter electrode lead to the PCB. The shorter earth lead must be fitted to the control panel earth mounting point. On 100 models the longer leads must be used.

1. The new complete controls assembly can now be fitted to the boiler in reverse order of dismantling.

2. Connect the harness wires in the following order:

   - Pass the fan, thermistor and limit thermostat wires through the side panel hole (upper). The wires for thermistor and limit thermostat must be routed through the bracket at the top of the appliance behind the flue hood and behind the return pipe.

   - Reconnect the white wires to the limit thermostat and the yellow wires to the thermistor.

   - If a flow switch is fitted internally, route the wiring harness behind the return pipe, through the bracket at the top of the appliance and out through the side panel hole (upper).

   - Reconnect the orange wires to the air pressure switch.

     If a flow switch is fitted, the female spade terminal (white wire) connects to the air pressure switch microswitch and the male spade (white wire) connects to one of the orange wires. The other orange wire connects to the air pressure switch microswitch.

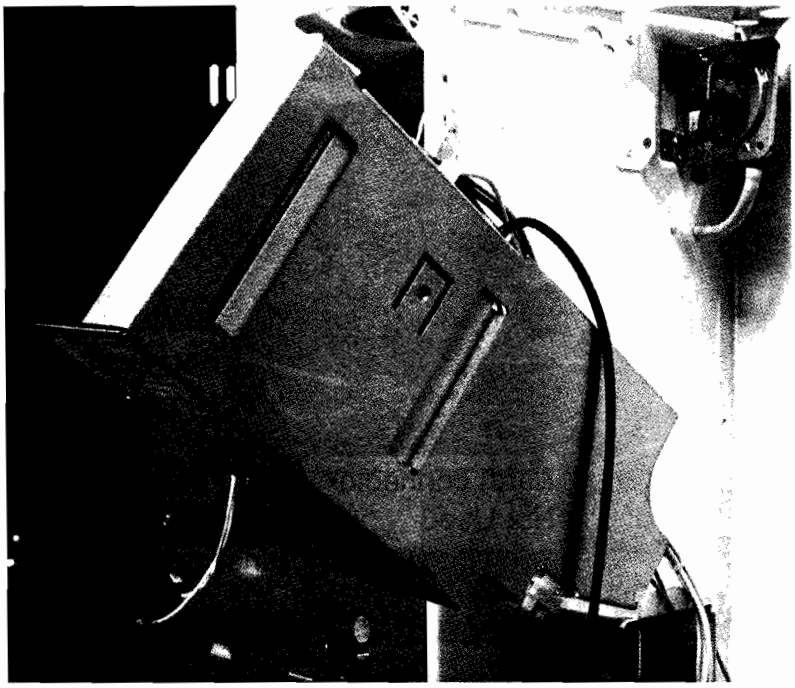

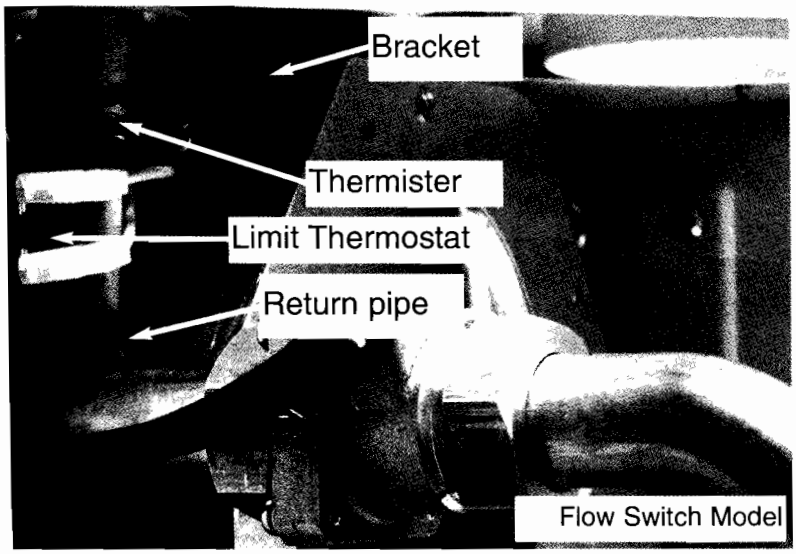

Flow Switch Model

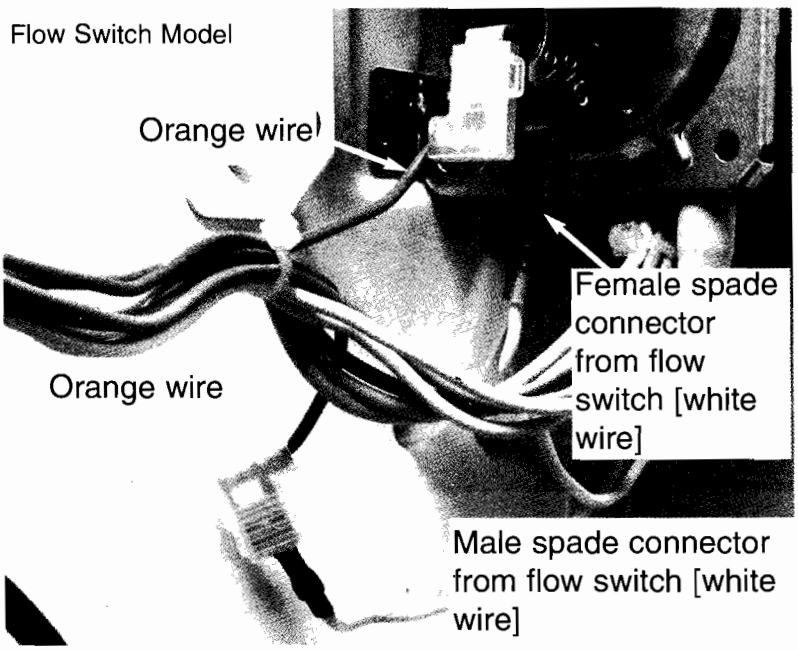

Replacement of Controls Assembly

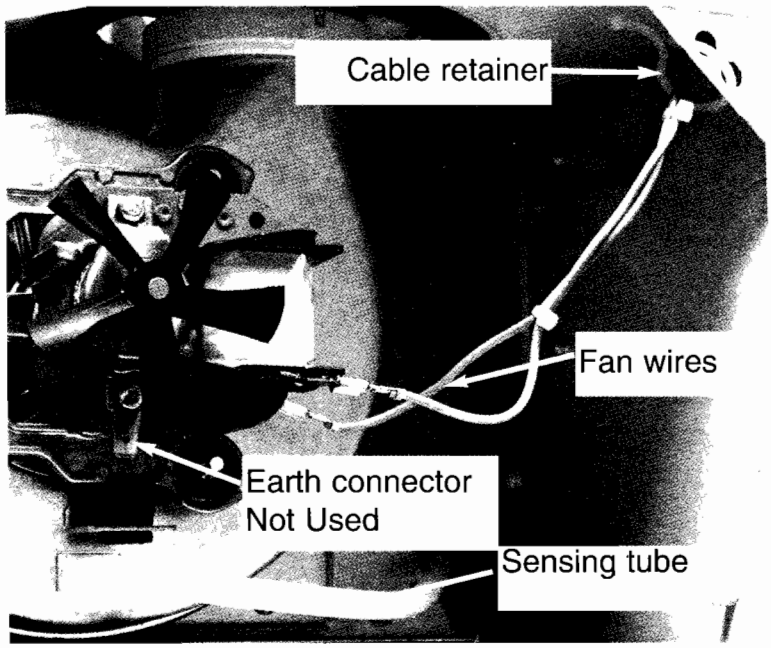

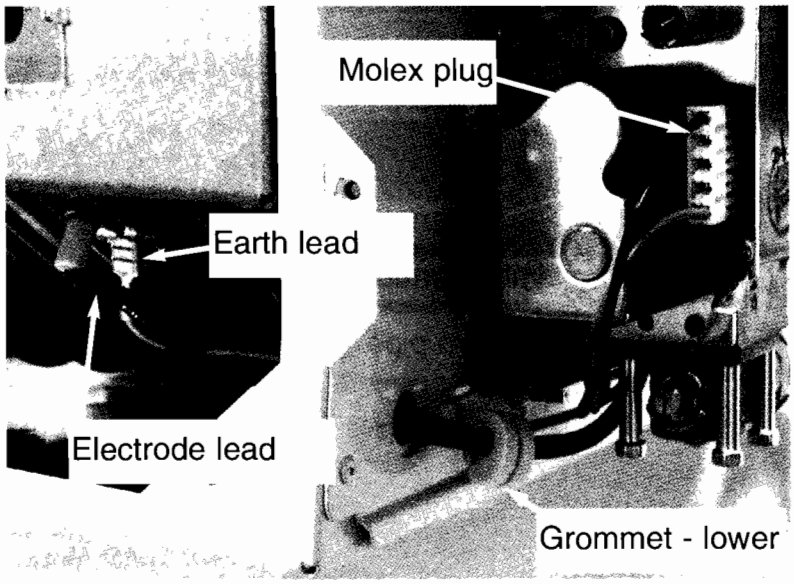

3. Check the condition of the fan gasket and outlet seal and replace if necessary.

   - Refit the fan and secure using the 3 screws previously removed. Connect the 2 violet wires ensuring they are secured in the plastic cable retainer.

   - Reconnect the sensing tube to the fan.

4. Run the electrode lead wire and earth through the side panel hole (lower) to their respective spades terminal on the spark igniter bracket.

5. **Important:** To ensure case soundness, the upper and lower side panel hole grommets must be fitted.

   Important: The self adhesive harness securing clip must be attached the the case as shown. Clip the harness into it before securing the controls in the upright position.

6. Swing the controls up into position and secure using the retaining screw.

7. Reconnect the 'Molex' plug to the gas valve and secure the Red and Black wires to the lower case side bracket using a cable tie.

8. Refit the outer white front case and secure using the screw previously removed.

9. Reconnect the mains and pump wires to the 7 way terminal block.

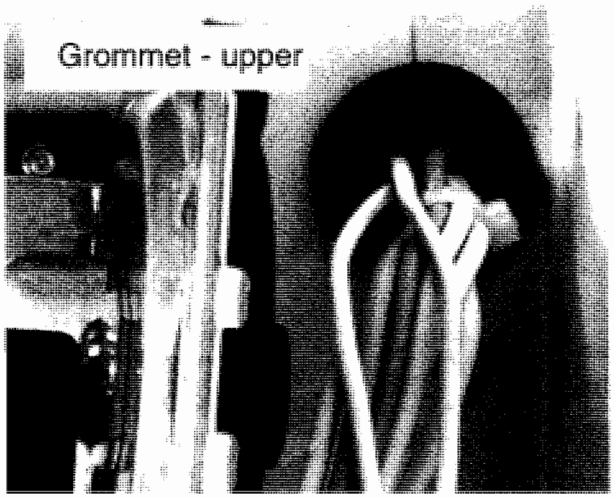

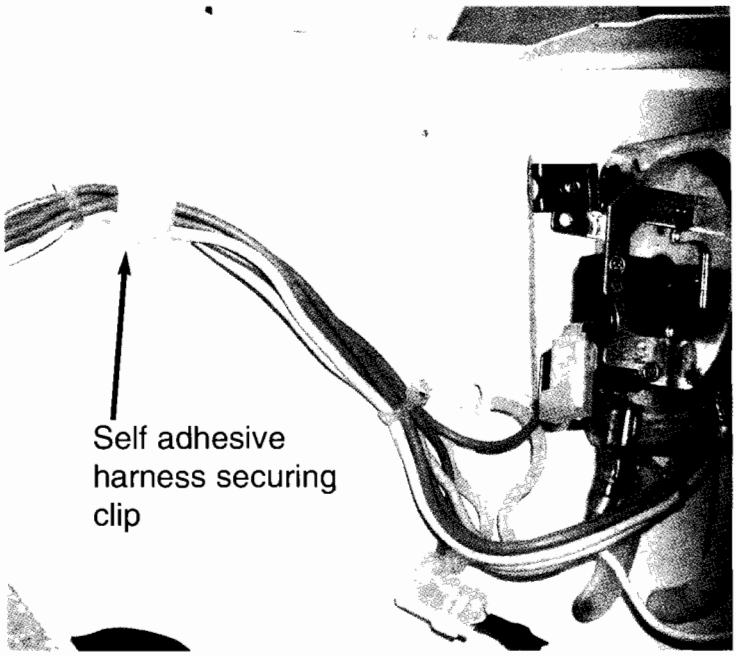

10. **It is essential that the original data label information is written onto the label provided in the kit.**

    The label must be fixed to the new controls panel as shown.

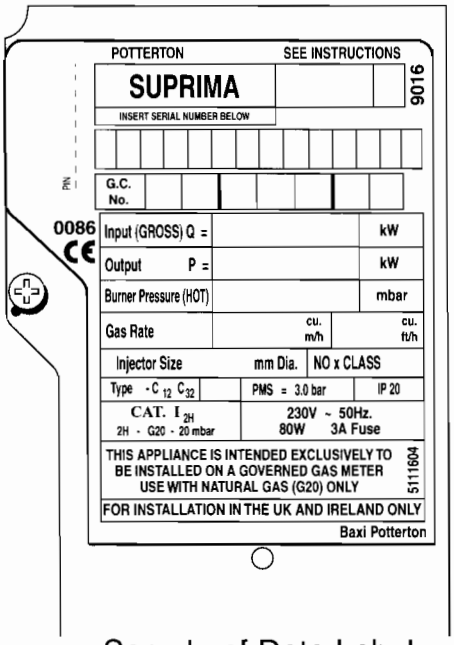

Sample of Data Label

11. Refit the outercase side and secure at the front using the plastite screw.

    Important: The outercase side must be earthed. Insert the remaining screw and paint cutting washer through the top of the outercase side and into the rivnut.

12. Carry out a functional check of the controls as shown on Page 9.

13. Show the User how to operate the boiler as shown on Page 2.

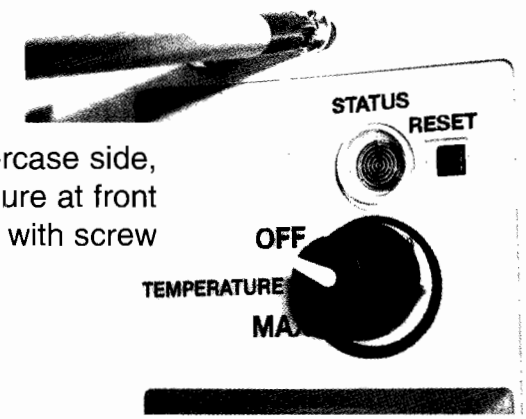

Outercase side, secure at front with screw

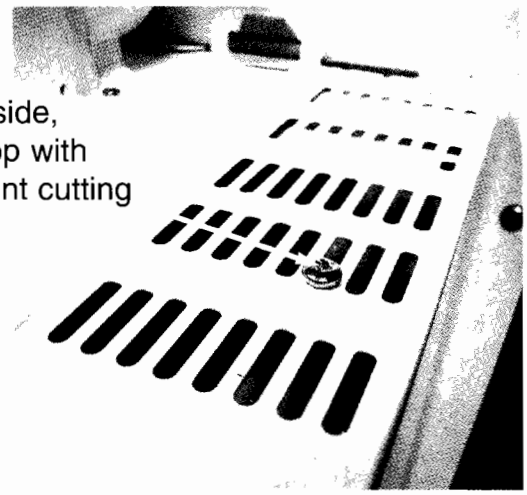

Outercase side, secure at top with screw & paint cutting washer

Important: The screw and paint cutting washer are used to earth the outercase side.

Wiring diagram

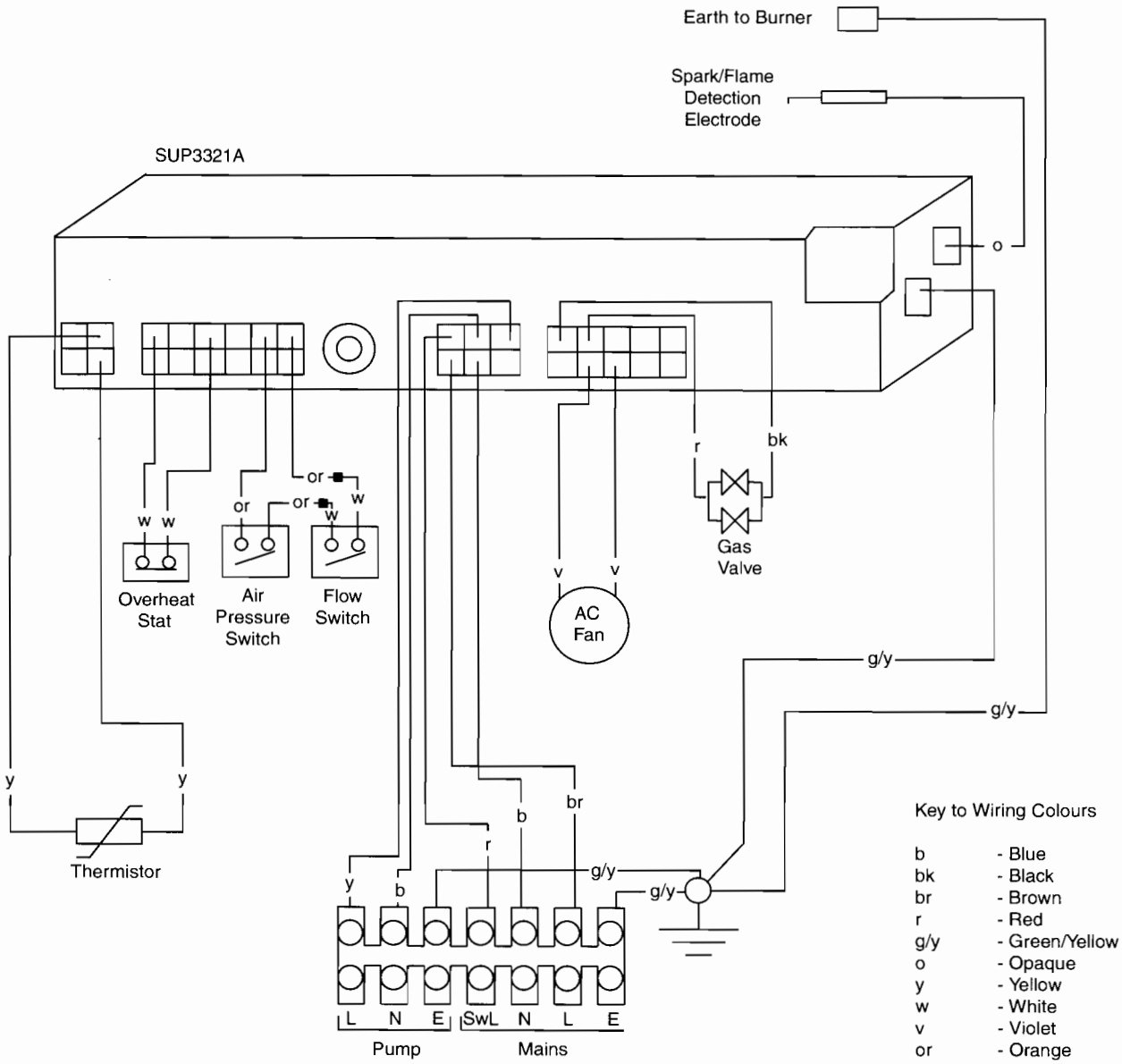

Spare parts

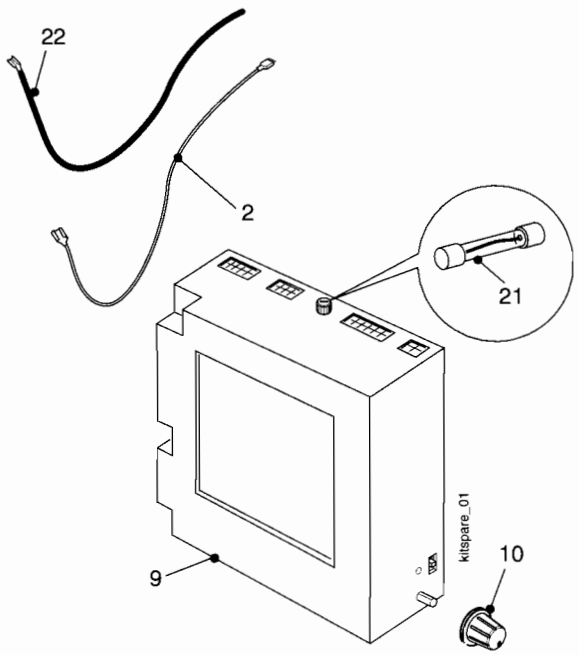

Drg. Ref.	Description	Qty.	Part No.
2	Earth Lead 30 - 80 models	1	5111772
	Earth Lead 100 model	1	5111773
9	PCB Enclosure	1	5112178
10	Control Knob	1	230981
21	Fuse (Type: 3.15AT)	1	160036
22	Electrode Lead 30 - 80 models	1	5111600
	Electrode Lead 100 model	1	5111601

3.1 Commission the System & Boiler

Important

Refer to the Installation & Service Instructions supplied with the boiler for all other commisioning requirements.

Commission the boiler

1. Set the boiler temperature control knob to 'Off'.

2. Turn the boiler gas service cock to the 'On' position and ensure that the main gas supply is turned 'On'.

3. Ensure that the main electricity supply is 'On'.

4. Check that the programmer, if fitted, is in an 'On' position and calling for heat.

5. Set the temperature control knob to its maximum setting and the boiler will attempt to light.

   If the boiler fails to light after five attempts (possibly due to air in system) it will lockout and the LED will flash red/off once per second. **Press the reset button for a minimum of 1 and a maximum of 10 seconds**. *(Do Not use excessive pressure)*, the boiler will attempt to relight a further five times.

   If the button is pressed for more than 10 seconds the LED will flash rapidly and will need to be reset again. If pressed for less than 1 second, the boiler will not reset.

6. When the burner flame has established, the LED on the user control panel will show a continuous green light.

LED Indication Status	LED
Mains Off	Off
Mains On No Ext. Call for Heat	Continuous Orange
Ext. Call for Heat *(Temp. Control set to Off)*	Flashing Orange
Air Proving & Ignition	Flashing Orange/Green
Burner On	Continuous Green
Boiler Temperature Control Satisfied	Flashing Green

If the boiler fails to operate

Check the LED indicator fault modes below and refer to fault finding guide and boiler wiring diagram.

LED Indicators Fault Modes Status	LED
Thermister Fault	Flashing Red every 5 sec
Wiring Harness Fault	Flashing Red/Orange 3 times/sec
Incoming Voltage <180V	Flashing Red/Orange once/sec
False Flame	Flashing Red/Orange every 5 sec
APS or Flow Switch Fault	Flashing Red 3 times/sec
PCB Fault	Continuous Red
Lockout Press reset button for more than 10 seconds & count flashes	5 Flashes = Overheat 2 Flashes = Ignition Failure

Fault finding

Carry out preliminary electrical system checks i.e. Earth Continuity, Short Circuit, Polarity and Resistance to Earth before Fault Finding.

Fault Finding - Master Sheet

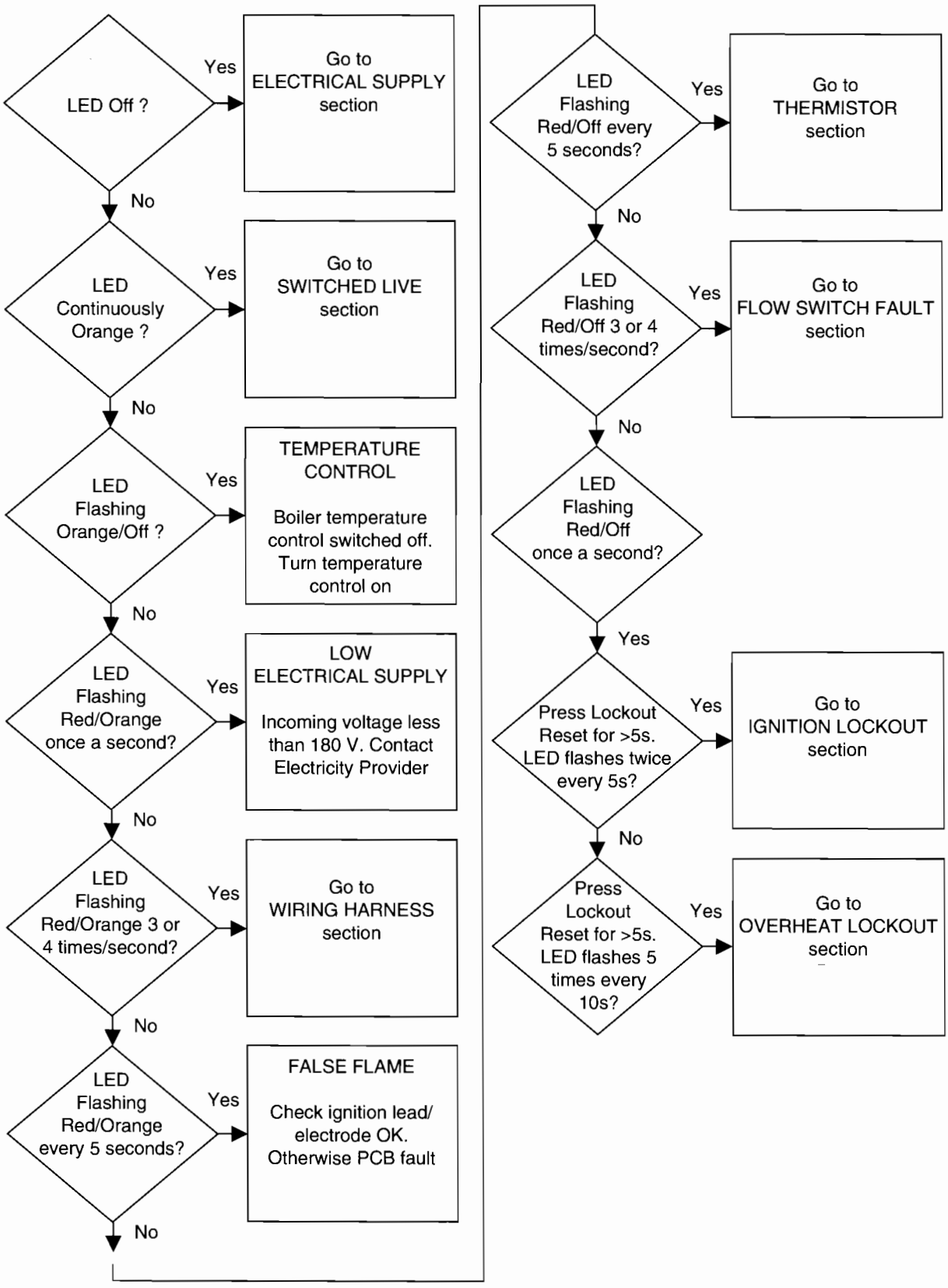

Fault Finding - Electrical Supply (LED Off)

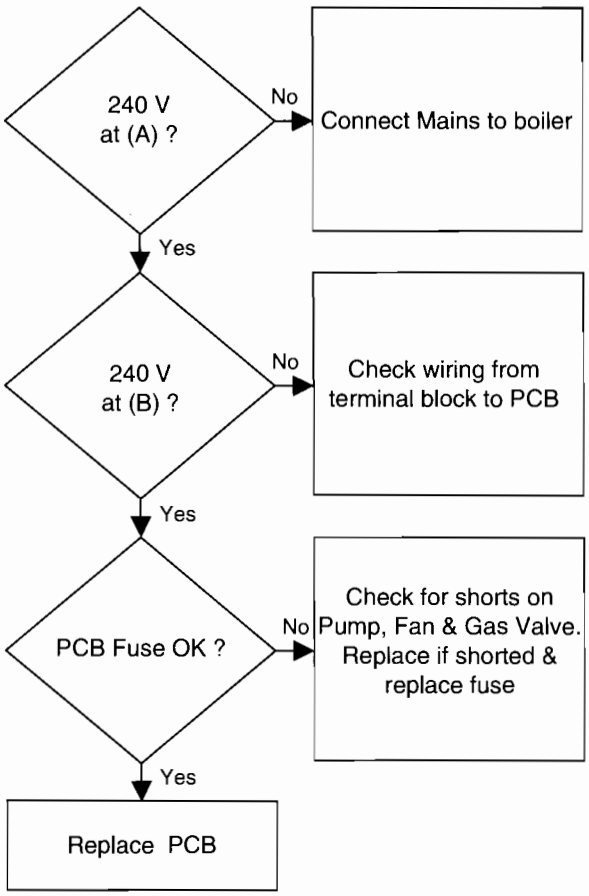

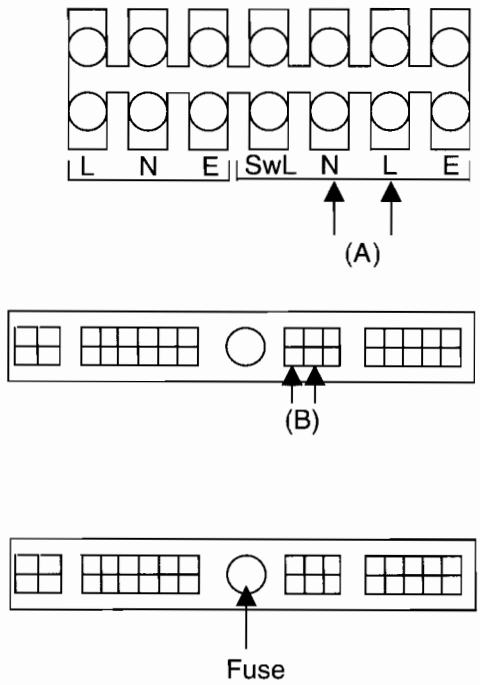

Fault Finding - Switched Live (LED Continuously Orange)

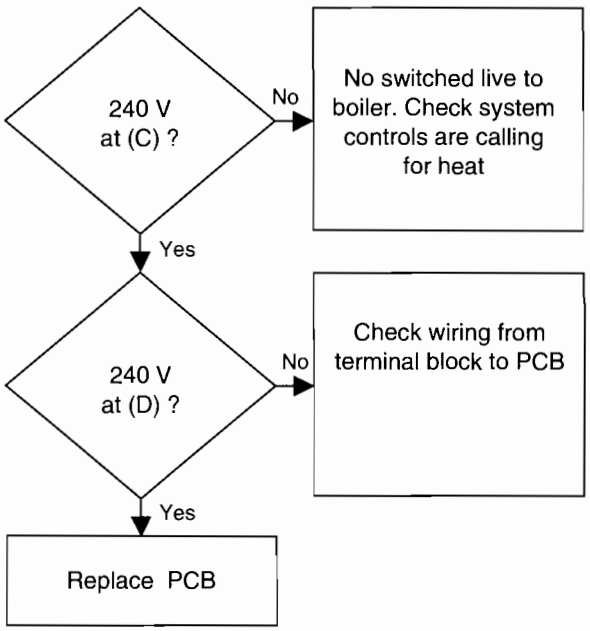

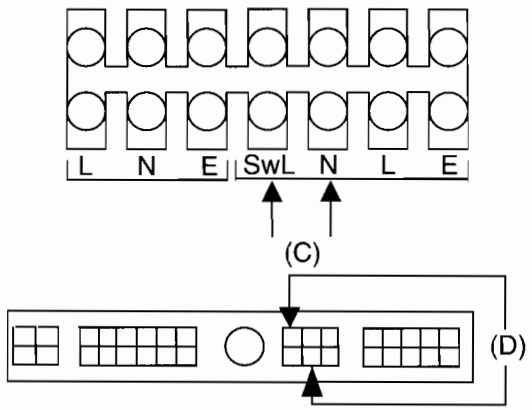

Fault finding

Fault Finding - Wiring Harness (LED Flashing Red/Orange 3 or 4 times/second)

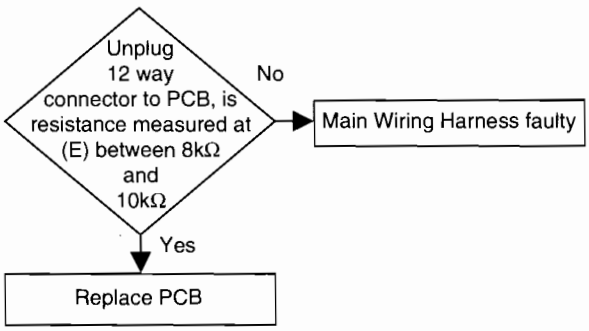

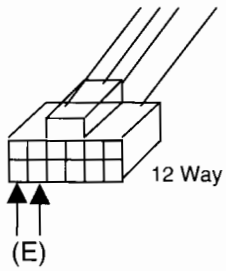

Fault Finding - Thermistor (LED Flashing Red/Off)

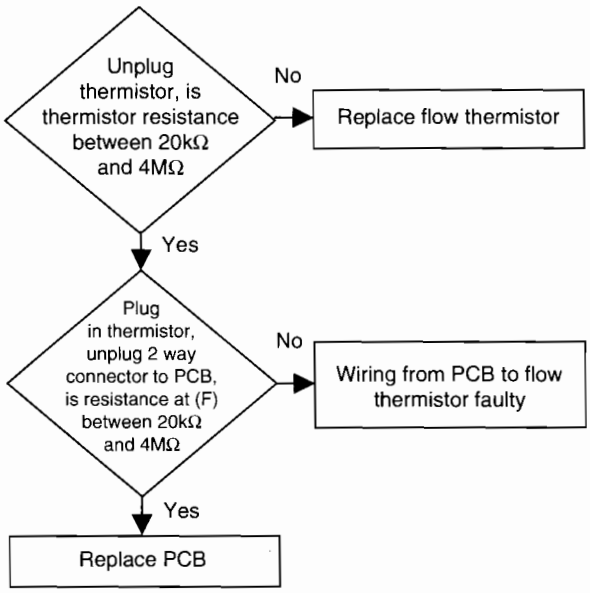

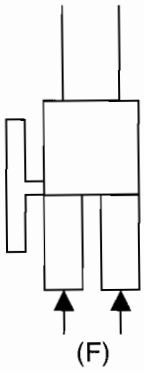

Fault Finding - Gas Valve Fault

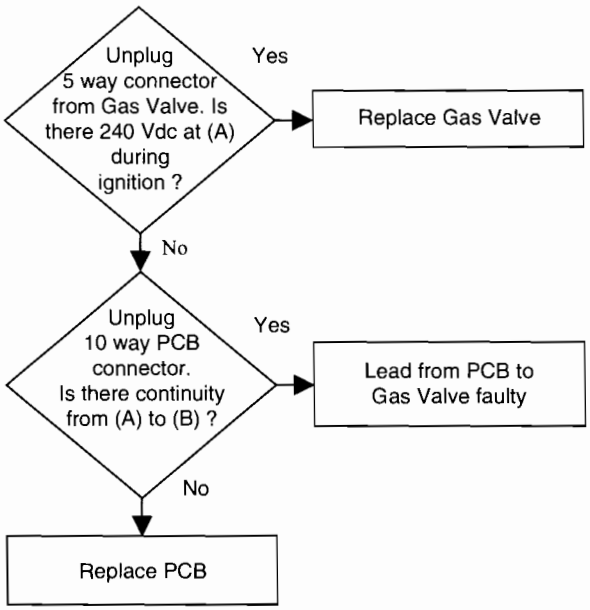

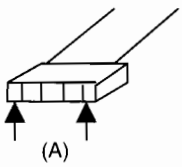

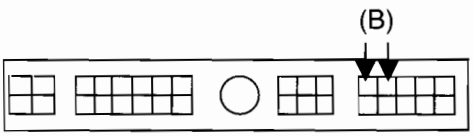

Fault Finding - Flow Switch Fault (LED Flashing Red/Off 3 or 4 times/second)

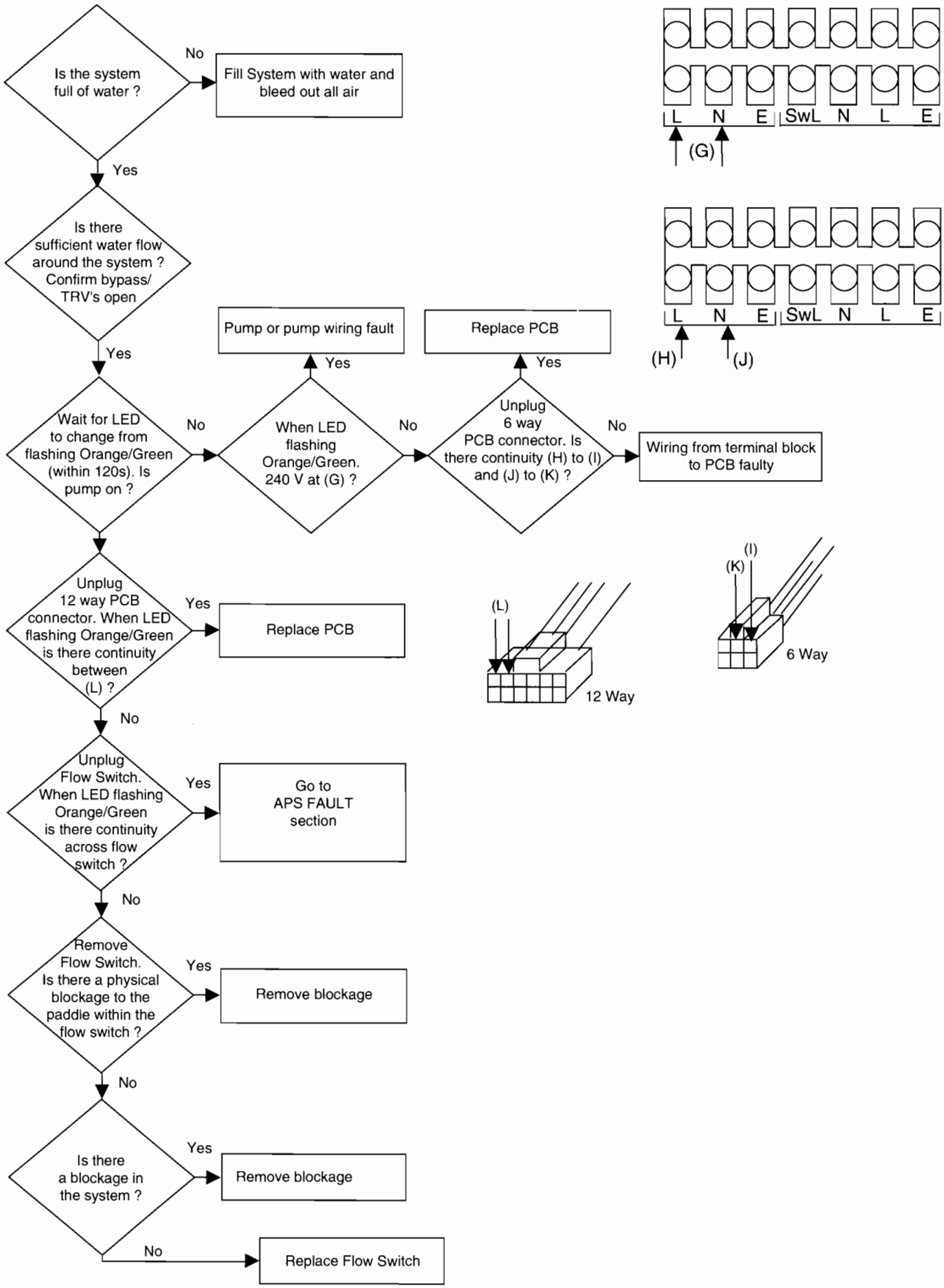

Fault finding

Fault Finding - Air Pressure Switch Fault

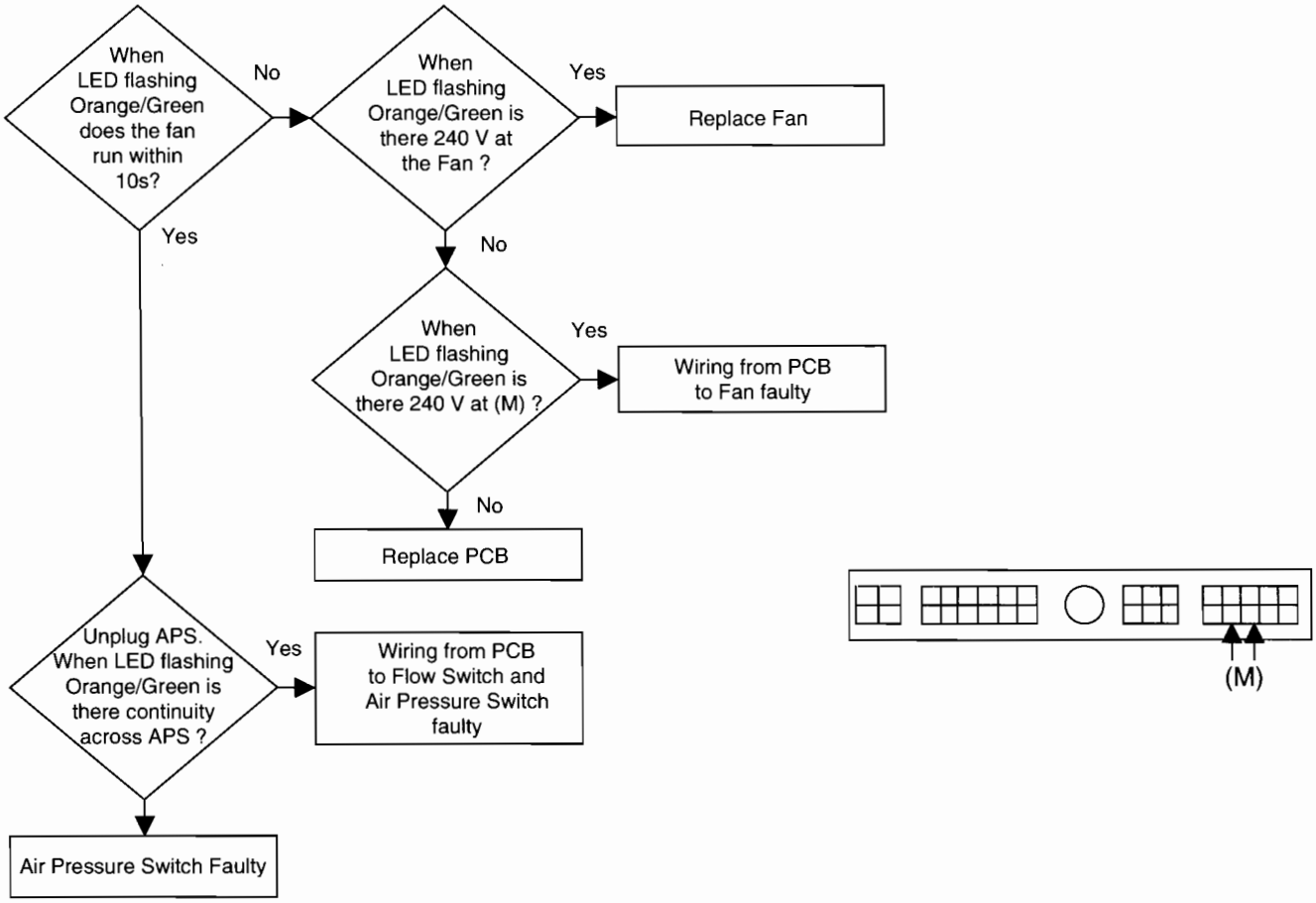

Fault Finding - Overheat Lockout (LED Red/Off 5 times every 10 seconds)

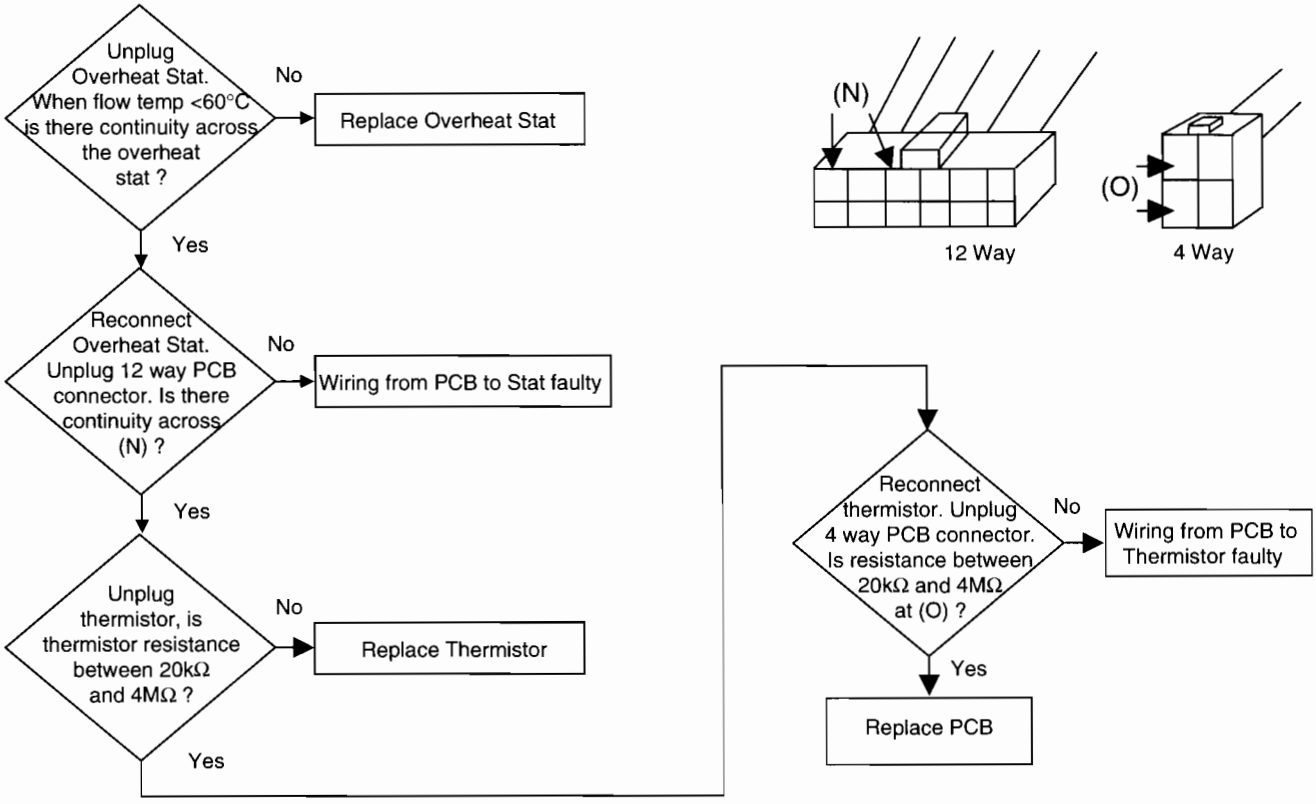

Fault Finding - Ignition Lockout (LED Flashing Red/Off 2 times every 5 seconds)

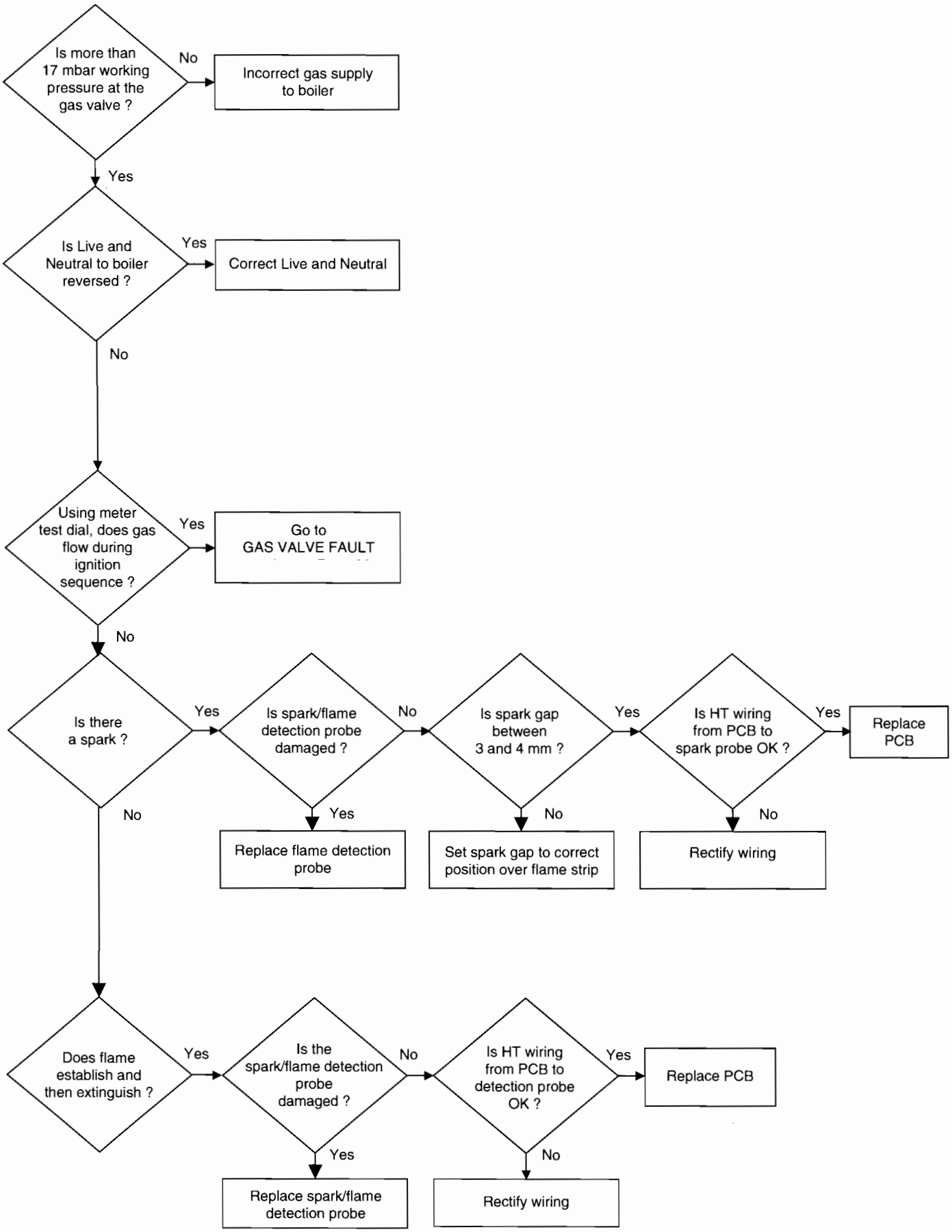

SPARES INQUIRIES:

Spare parts are available nationwide via the **interpart** stockists network. For your local stockist consult Yellow Pages under Central Heating.

All descriptions and illustrations contained in this catalogue have been carefully prepared, but we reserve the right to make changes and improvements in our products which may affect the accuracy of the information contained in this catalogue. All goods are sold subject to our standard Conditions of sale which are available on request.

Registered Office
Pentagon House
Sir Frank Whittle Road
Derby DE21 4XA.

www.baxipotterton.co.uk