POTTERTON PROFILE

lOOe, fanned balanced flue gas fired boiler

THIS APPLIANCE IS FOR USE WITH NATURAL GAS (G20) ONLY

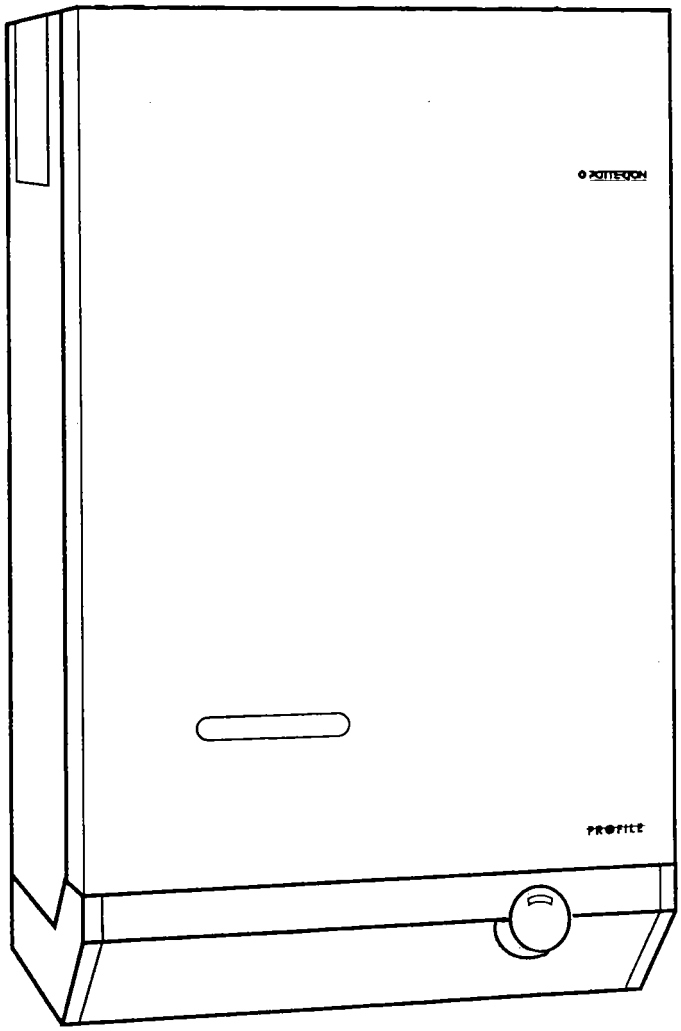

Installation and Servicing Instructions

LEAVE THESE INSTRUCTIONS ADJACENT TO THE GAS METER

spares & parts online IBASIS.CO.UK

GAD (90/396/EEC)

POTTERTON PROFILE lOOe G.C. No. 41 -607-49 (S.I.T. Control Valve)
POTTERTON PROFILE lOOe G.C. No. 41-605-65 (White Rodgers Control Valve)

IMPORTANT This appliance must be installed and serviced by a competent person as stated in the Gas Safety (Installation and Use) Regulations 1994.

Profile boilers are certified for safety, it is therefore important that no external control devices (e.g. flue dampers, economisers, etc.) be directly connected to these appliances unless covered by these installation instructions or otherwise recommended in writing. Any direct connection of a control device not approved by Potterton could invalidate the certificate and the normal warranty.

LIST OF CONTENTS - Page 2

General	Page No. 2	Site Requirements	Page No. 3
Optional Extras	Page No. 2	Technical Data	Page No. 6
Accessories	Page No. 3	Installation Instructions	Page No. 11
Installation Data	Page No. 3	Commissioning	Page No. 18
Boiler Dimensions	Page No. 3	Health and Safely Information	Back Page
		Control Systems, Pipework and Wiring Guide	Supplied in
		User's Instructions	Literature Pack

GENERAL - Page 2

This Potterton Profile boiler is a fully automatically controlled wall mounted fan powered balanced flue appliance, using a cast iron heat exchanger and is range rated from 23.44-29.3kW (80,000-100,000 Btu/h) output.

The boiler which is designed to provide domestic hot water and/or central heating must be used on INDIRECT hot water systems only. The cast iron heat exchanger, is suitable for use on open vented gravity domestic hot water/pumped central heating systems or fully pumped systems which may be sealed or open vented.

The boiler can be supplied with either of the following types of flue system, these are packaged with the terminal and associated flue components.

1) Standard Horizontal flue system Part No. 225542. Suitable for a wall thickness from 100mm (4in.) to 51 0mm (2Oin.).
2) 1 metre horizontal flue system Part No. 225545. Which provides a maximum flue length of 955mm (37 in.).
3) 1 metre vertical flue system Part No. 213050. Which allows the flue to pass through a flat roof and terminate at a maximum height of 980mm (38in.) measured from top of the boiler case.

OPTIONAL EXTRAS - Page 2

The following are kits available as optional extras:-

Internal Fitment Kit, Part No. 225184, which is suitable for a maximum wall thickness of 510mm (2Oin.) is to be used where access to the outside wall is impracticable.

Pump Cover Kit, located on top of the boiler and designed to conceal the pump, and/or any motorised valves installed above the boiler (**Note:** Pump cannot be fitted above the boiler if the vertical flue kit is used).

The following sizes are available:-

6in.	Part No.225418
7in. - l2in.	Part No. 225419
l3in. - l8in.	Part No. 225420
l9in. - 24in.	Part No.225421

Terminal Wall Plate, Part No. 212280, where necessary can be fitted to the outside wall face to improve the appearance, after making good around the terminal.

Terminal Guard, Part No. 205792, to be used when the terminal is fitted less than 2m above a balcony, above ground or above a flat roof to which people have access.

ACCESSORIES - Page 3

The following range of Potterton system controls are also available and further information will be provided on request.

Electronic Programmer E.P. 2001, E.P. 3001, E.P. 4001, E.P. 6000.

Programmable Electronic Thermostat PET 1.

Thermostatic Radiator Valve Myson

Electronic Cylinder Thermostat PTT2

Electronic Room Thermostat PRT2

Spring Return Zone Valve PMV2

Spring Return Diverter Valve PMV3

INSTALLATION DATA - Page 3

The installation of the boiler must be in accordance with the latest relevant requirements of the Gas Safety (Installation and Use) Regulations, local building regulations, lEE Wiring Regulations and the Byelaws of the Local Water Undertaking.

Detailed recommendations are contained in the following British Standards and Codes of Practice.

B56798, B55440 Part 1

B55440 Part 2 B55449 Part1
BS5546 B54814. B56891.
BUILDING REGULATIONS.
MODEL WATER BYELAWS.
BRITISH GAS PUBLICATION DM2.
GAS SAFETY (INSTALLATION AND USE) REGULATIONS.
BUILDING STANDARDS (SCOTLAND) REGULATIONS.

BOILER DIMENSIONS - Page 3

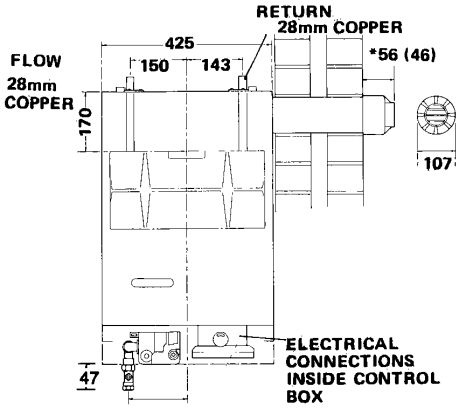

FIG. 1

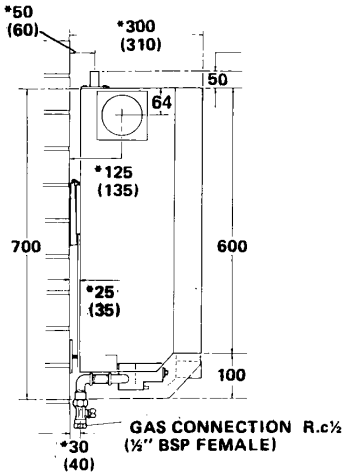

S.I.T. VALVE

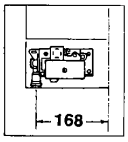

* NOTE
IF PIPEWORK IS TO BE RUN DOWN TO THE BACK OF THE BOILER THE NORMAL CLEARANCE OF 25mm BETWEEN THE REAR OF THE BOILER AND WALL CAN BE INCREASED TO 35mm IF DESIRED BY INVERTING THE BOILER MOUNTING PLATE DURING INSTALLATION.

(Dimensions in brackets apply when the mounting plate is inverted).

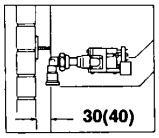

S.I.T. VALVE

SITE REQUIREMENTS - Page 3

The boiler is not suitable for external installation and should not be fitted directly above a cooking appliance. The boiler m be installed in any room, although particular attention is drawn to the requirements of the current I.E.E. Wiring Regulations and in Scotland, the electrical provisions of the Building Standards applicable in Scotland with respect to the installation of the appliance in a room containing a bath or shower.

Where a room-sealed appliance is installed in a room containing a bath or shower, any electrical switch or appliance control, utilising mains electricity should be so situated that it cannot be touched by a person using the bath or shower.

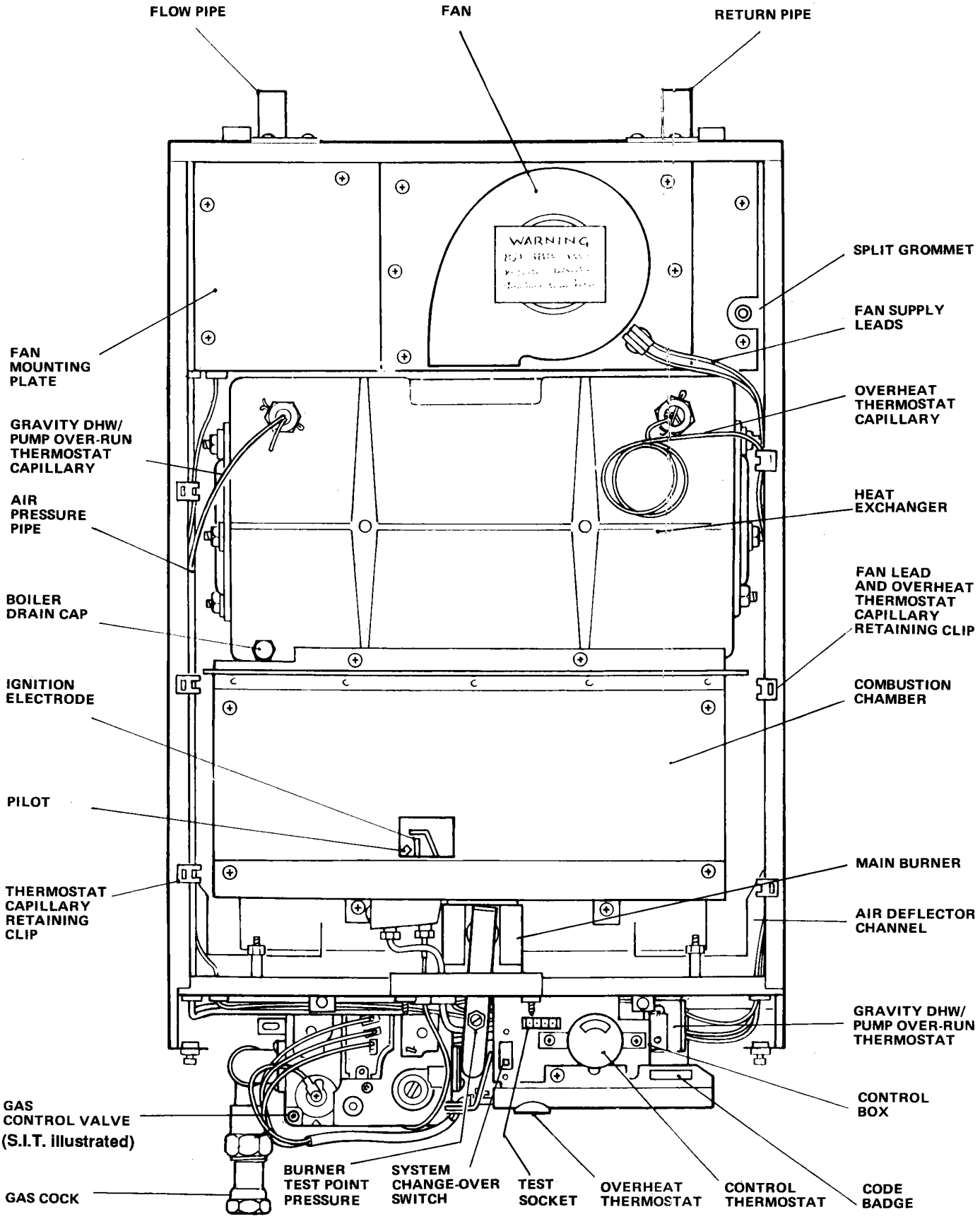

FIG. 2 GENERAL ARRANGEMENT

spares & parts online IBASIC.CO.UK JK

Where the installation of the boiler will be in an unusual location, special procedures may be necessary and BS 6798 gives detailed guidance on this aspect.

Ensure that the gas supply pipe and meter are large enough for this appliance and any others that may be run off the same meter. Reference should be made to B56891.

Boiler Mounting Surfaces

The boiler must be mounted on a flat wall, which may be of combustible material and must be sufficiently robust to take the weight of the boiler. The requirements of the local authorities and the building Regulations must be adhered to.

IMPORTANT NOTICE:
TIMBER FRAMED HOUSES

If the appliance is to be fitted in a timber framed building, it should be fitted in accordance with British Gas Publication 'Operational Procedures for Customer Service' Part 19. If in any doubt, advice should be sought from the local region of British Gas.

Clearances Around the Boiler

The following minimum clearances must be maintained after installation, for correct operation and servicing of the boiler:

610mm (2 ft) at the front of the boiler

5mm (0.2 in) each side of the boiler

50mm (2 in) at the top (measured from the top of the boiler case), except where the optional extra pump cover is to be fitted, when 178mm (7 in) should be allowed.

100mm (4 in) at the bottom of the boiler.

Additional clearances to these are required during installation for lifting the boiler and 127mm (5 in) is required at the top of the boiler for access to the pipe connections.

Ventilation

If the boiler is to be installed in a confined space such as a cupboard, the space will need ventilating. Openings must be provided at the top and bottom of the cupboard each of which should have a free area of 349 cm^2, (54 in^2). Further details for installation of a boiler within a compartment are giving in BS 6798.

If the openings draw air from outside the building the free areas may be halved. Refer to BS 54401 Part 2 for further guidance.

Balanced Flue Terminal and Ducting

The fresh air inlet and flue ducts can be run from either the left, right, rear or top of the boiler to a miniature terminal on the outside of the building.

The minimum spacings from the terminal to obstructions and ventilation openings as shown in FIG. 3.. For information appertaining to horizontal flue lengths reference should be made to FIG. 4.

If a terminal is fitted less than 2m above a balcony, above ground or above a flat roof to which people have access then a suitable terminal guard should be fitted (P.I.L No. 205792).

Refer to B55440 Part 1 for further guidance.

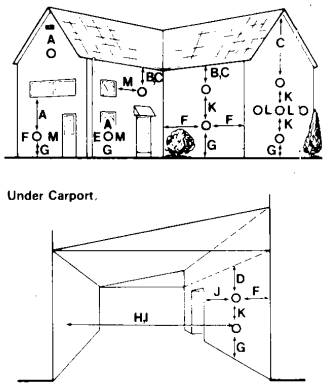

Fig. 3 THE SITING OF BALANCED FLUE TERMINALS

INFORMATION RELATING TO VERTICAL FLUING IS PROVIDED WITH THE VERTICAL FLUE SYSTEM PACK.

NOTE

Where a flue terminal is fitted less than 1000 from a plastic or painted gutter or 500mm from painted eaves, an aluminium sheild of 1000 length should be fitted to underside of gutter or eaves.

Any car port or other add-on extension should consist of a roof or a roof and one other wall. If it consists of a roof and two other walls — the installation shall be treated as suspect and further advice sought.

POSITION		MINIMUM DISTANCE mm
A.	DIRECTLY BELOW AN OPENABLE WINDOW, AIR VENT, OR ANY OTHER VENTILATION OPENING.	300
B.	BELOW GUTTER, DRAIN/SOIL PIPE	75
C.	BELOW EAVES	200
D.	BELOW A BALCONY OR CAR PORT ROOF	200
E.	FROM VERTICAL DRAIN PIPES AND SOIL PIPE	75
F.	FROM INTERNAL OR EXTERNAL CORNERS	300
G.	ABOVE ADJACENT GROUND OR BALCONY LEVEL	300
H.	FROM A SURFACE FACING THE TERMINAL	600
I.	FACING TERMINALS	1,200
J.	FROM OPENING (DOOR/WINDOW) IN CARPOT INTO DWELLING	1,200
K.	VERTICALLY FROM A TERMINAL ON THE SAME WALL	1,500
L	HORIZONTALLY FROM A TERMINAL ON THE SAME WALL	300
M.	ADJACENT TO OPENING	150

REAR OR SIDE FLUEING - Page 6

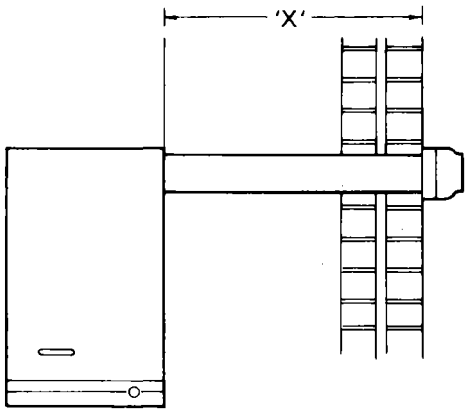

	MAXIMUM LENGTH 'X'
STANDARD FLUE SYSTEM	510mm (20in)
1 METRE FLUE SYSTEM	955mm (37in)

FIG. 4 FLUE LENGTHS

ELECTRICITY SUPPLY

A 240 volts ~ 50Hz, single phase electricity supply fused to 3 amperes, must be provided in accordance with the latest edition of the I.E.E. Wiring Regulations and any other local regulations that may apply. The current rating of the wiring to the boiler must exceed 3 amperes and have a cross sectional area of at least 0.75mm^2 in accordance with BS 6500. Table 16.

The supply to the boiler and its associated equipment should be controlled by a 3A fused double pole switch (having at least 3mm contact separation in both poles) so that complete isolation from the supply can be achieved to enable servicing work to be carried out in safety.

TECHNICAL DATA - Page 6

Maximum working head	30.5m (100 ft)	Power consumption (excluding pump)	80 watts
Minimum working head on Fully Pumped systems	305mm (1 ft)	Flow/Return connection	28mm copper
Minimum circulating head on Gravity systems	1.2m (4 ft)	Gas supply connection	Rc. 1/2 (1/2 in BSP Female)
Gas supply pressure	20mbar	Water Content	6.5 litre (1.43 gal)
Maximum Flow temperature	82°C	Appliance Weight-installed	63.5kg (140 lbs)
Electricity supply	240v ~ 50Hz fused at 3A	Appliance Weight-lift	54.5kg (120 lbs)
Internal Fuse	T1A		

spares & parts online IBASIS.CO.UK

	INJECTOR SIZE	GAS RATE m3/h (ft3/h)	INPUT kW(Btu/h)	OUTPUT kW(Btu/h)	BURNER PRESSURE mbar	in wg
Min	4.9mm	3.00(105.9)	32.1(109500)	23.5(80000)	10.0	4.0
		3.31(117.0)	35.4(121000)	26.4(90000)	12.0	4.8
Max		3.62(128.0)	38.8(132500)	29.3(100000)	14.0	5.6

CIRCULATION PUMP SELECTION

The resistance through the heat exchanger when operating with a water flow rate producing an 11 ^{0}C temperature riseat maximum boiler output are shown in TABLE 2. If other controls, such as three-position valves are used in the system, the resistance through them, quoted in their manufacturer's literature must be taken into account. The pump may be fitted on either the flow or return and MUST be wired directly to the boiler terminal block, see FIG. 24. It must be fitted with two isolating valves which are positioned as close to the pump as possible. Closing of any valve must always leave the open vent unobstructed.

TABLE 2

WATER FLOW RATE		BOILER RESISTANCE			
		WITH DISC		WITHOUT DISC	
litres/sec	gal/min	KN/m2	in wg	KN/m2	in wg
0.637	8.4	17.8	72	5.2	21

NOTE: Great care should be taken when selecting a pump to ensure that the correct flow rate is achieved. Fully pumped systems should be designed so that the system differential is no greater than 15ºC.

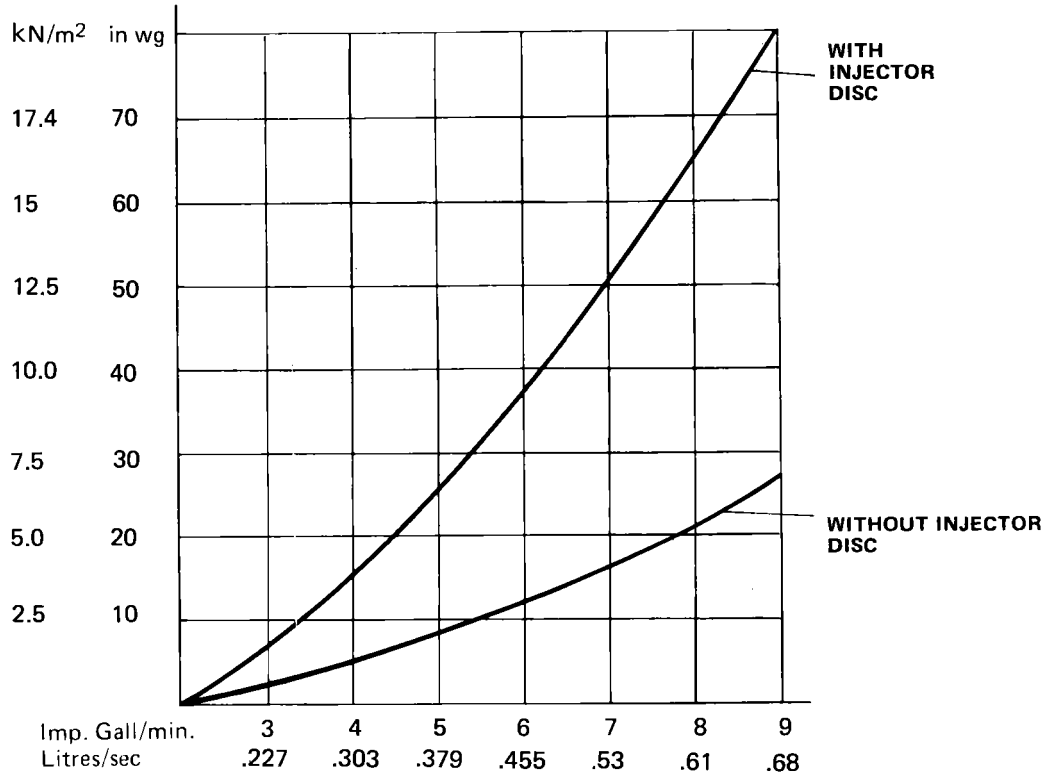

FIG. 5 PRESSURE LOSS ACROSS BOILER

The System

The boiler must be used on INDIRECT hot water systems only. It is suitable for use on open vented gravity domestic hot water/pumped central heating systems or, fully pumped systems which are open vented.

The system should be designed so that the maximum static head does not exceed 30.5 m (lOOft) and a minimum on fully pumped systems of 305 mm (1 ft). See FIG. 6.

Gravity domestic hot water circuits should have a minimum circulating head of 1.2 m (4ft). See FIG. 8.

To ensure optimum boiler performance on both gravity hot water and fully pumped systems a change-over switch is incorporated in the boiler control box. The boiler is supplied with the switch set for sealed or open vented fully pumped systems.

If the boiler is to be used on a system with gravity hot water the switch should be set at the GRAVITY position. In addition the bulb of the overheat thermostat should be repositioned as shown in FIG. 21 b.

To prevent reverse circulation in the gravity circuit when the pump is running an injector disc is provided to form an injector tee at the return connection on the boiler. See FIG. 20.

On all systems the pump should be wired to the boiler terminal block. To prevent nuisance operation of the overheat thermostat, it is important that where electrically operated zone valves are used the boiler is wired so it does not cycle when the zone valves are closed. Also, systems fitted with controls that close both hot water and central heating circuits while the boiler is still hot, must be fitted with a by-pass circuit to dissipate the residual heat within the boiler.

Further information on by-pass arrangements is provided in later notes and illustrations.

Drain off taps should be fitted in the pipework close to the boiler and in the low points of the system.

Note: Although the system can be emptied using the drain off taps installed in the pipework around the system, to empty the boiler it is necessary to remove the drain off cap positioned within the boiler case. See FIG. 2.

Combined Gravity Hot Water Pumped Central Heating Systems. Where a cylinder thermostat and zone valve is used to control the temperature of the hot water it is recommended that a by-pass by installed in the gravity circuit. A suggested method of doing this is shown in FIG. 8 where the bathroom radiator is connected into the gravity circuit and is fitted with two lockshield valves. Mechanically operated thermostatic domestic hot water temperature control valves which allow the boiler to operate when the valve is closed or partially closed MUST NOT BE FITTED.

Fully pumped Systems

NOTE: Great care should be taken when selecting a pump to ensure that the correct flow rate is achieved. Fully pumped systems should be designed so that the system differential is no greater than 15ºC.

With the change-over switch in the control box set at the FULLY PUMPED position, the pump will be controlled by an over-run thermostat. This will ensure that the pump will continue to run after boiler shut down if the water temperature in the boiler is high. If a three port diverter valve is used as shown in FIG. 6, a by-pass is not necessary since one circuit is always open.

temperature in the boiler is high, thus preventing nuisance operation of the overheat thermostat. If a three port diverter valve is used as shown in FIG. 6, a by-pass is not necessary since one circuit is always open.

Where a pair of two port valves are used, a by-pass is necessary. The total length of the by-pass circuit taken from the boiler connections should be greater than 4 metres of 22 mm pipe. It should be fitted with a lockshield valve and be adjusted to maintain a minimum flow through the boiler of 4.5, litres/mm (1 gal/mm) see Figs. 6, 7.

Systems fitted with controls which allow the boiler to operate when both the hot water and central heating circuits are closed, i.e. mechanically operated thermostatic control valves, must be fitted with a by-pass circuit capable of:-

1. Dissipating a minimum of 1 kW (3400 Btu/h)

2. Maintaining a minimum water flow through the boiler of 9 litres/mm (2 gal/mm).

A suggested method of meeting these requirements by using a bathroom radiator fitted with two lockshield valves is shown in FIGS. 6, 7.

Additional system information can be found in the Control Systems, Pipework and Wiring Guide.

SEALED SYSTEMS (FULLY PUMPED)

Installation

The installation must comply with the requirements of BS 6798 and BS 5449 Part 1. The B.G. publication “British Gas Specification for Domestic Wet Central Heating Systems” should also be consulted.

Safety Valve

A non adjustable spring-loaded safety valve, preset to operate at 3 bar (45lbf/in^2) shall be used. It must comply with BS 6759 Part 1 and include a manual testing device. It shall be positioned in the flow pipe either horizontally or vertically upwards and close to the boiler. No shut-off valves are to be placed between the boiler and the safety valve. The valve should be installed into a discharge pipe which permits the safe discharge of steam and hot water such that no hazard to persons or damage to electrical components is caused.

Pressure Gauge

A pressure gauge incorporating a fill pressure indicator, covering the range 0-4 bar (60 lbf/in^2) shall be fitted to the system. It should be connected to the system, preferably at the same point as the expansion vessel. Its location should be visible from the filling point.

Expansion Vessel

A diaphragm type expansion vessel to BS4814 Part 1 shall be fitted close to the inlet side of the pump. The connecting pipework should not be less than 15 mm (1/2 in nominal). Pipework connecting the expansion vessel should not incorporate valves of any sort. Methods of supporting the vessel are supplied by the manufacturer. The nitrogen or air charge pressure of the expansion vessel shall not be less than the hydrostatic head, (height of the top point of the system above the expansion vessel). To size the expansion vessel it is first necessary to calculate the volume of water in the system in litres. The following volumes may be used as a conservative guide to calculating the system volume.

Boiler Heat Exchanger:	6.5 litres
Small Bore Pipework:	1 litre per kW of system output
Micro Bore Pipework:	7 litres
Steel Panel Radiators:	8 litres per kW of system output
Low Water Capacity Radiators:	2 litres per kW of system ouput
Hot water Cylinder:	2 litres

If the system is extended, the expansion vessel volume may have to be increased unless previous provision has been made for the extension. Where a vessel of the calculated size is not available, the next available larger size should be used. The boiler flow temperature is controlled at approximately 82ºC.

The vessel size can now be determined from the following table where V=System volume in litres.

Vessel Charge Pressure (bar)	0.5	1.0
Initial System Pressure (bar)	1.0	1.0
Expansion Vessel Volume (litres)	Vx0.11	Vx0.087

Further guidance is given in BS 5449 Part 1 or BS 7074 Part 1.

Cylinder

The hot water cylinder must be an indirect coil type or a direct cylinder fitted with an immersion calorifier suitable for operating at a gauge pressure of 0.3 bar (5lbf/in^2) in excess of safety valve setting. Single feed indirect cylinder are not suitable for sealed systems.

Method of Make-Up

Provision shall be made for replacing water loss from the system either:-

i) from a make-up vessel or tank mounted in a position higher than the top point of the system, and connected through a non-return valve to the system on the return side of hot water cylinder or the return side of all heat emitters.
or

ii) where access to a make-up vessel would be difficult by using the mains top up method or a remote automatic pressurisation and make-up unit as sillustrated in FIG. 7 METHODS 1 and 2.

Mains Connection

There shall be no connection to the mains water supply or to the water storage tank which supplies domestic water even through a non-return valve, without the approval of the local Water Authority.

Filling Point

The system shall be fitted with a filling point at low level which incorporates a stop valve to BS1010 and a double check valve (approved by the National Water Council) to be fitted in this order from the system mains, Refer to FIG. 7. Method 1.

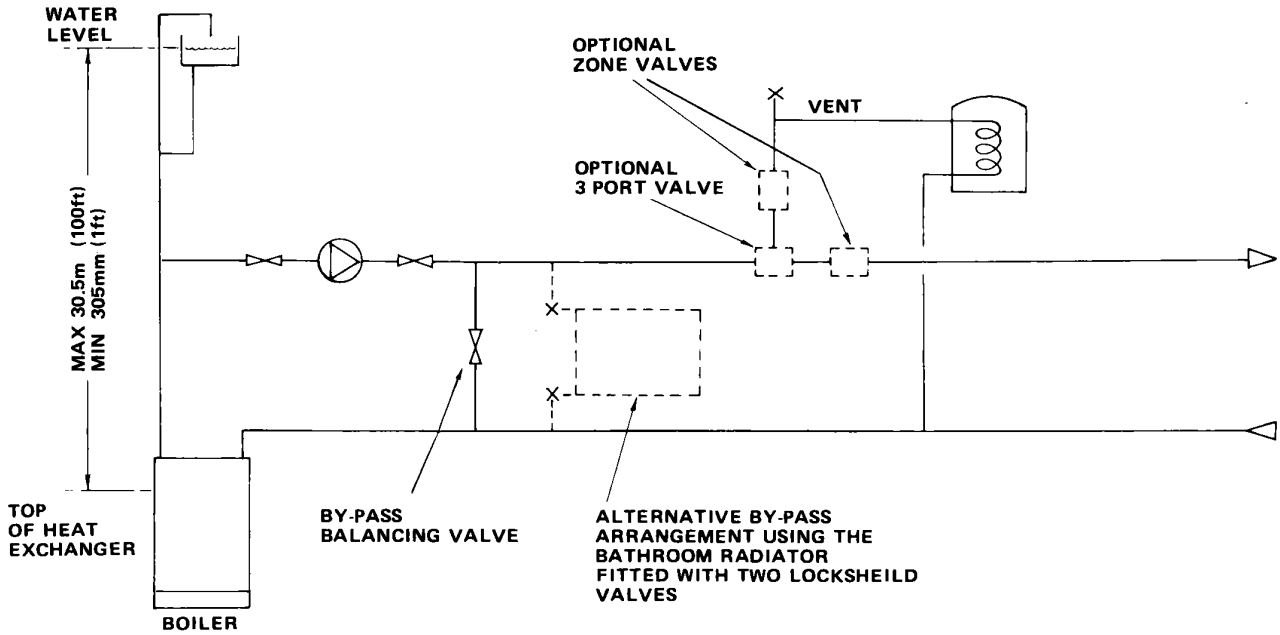

FIG. 6 OPEN VENTED FULLY PUMPED SYSTEM FITTED WITH A COMBINED FEED AND VENT

IBASIS.CO.UK spares & parts online

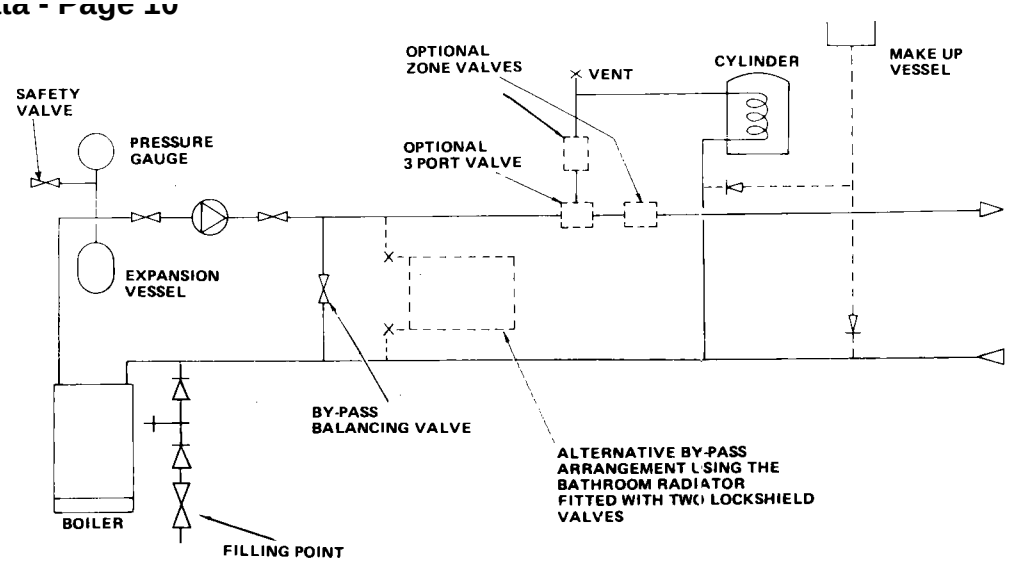

Two methods of filling a sealed water system

METHOD 1
MAINS TOPPING-UP METHOD

NOTE: This method of filling a sealed system may only be used if acceptable to the Local Water Undertaking

METHOD 2
CISTERN FILLING METHOD

NOTE: Cistern to be supplied through a temporary connection from a service pipe or cold water distributing pipe

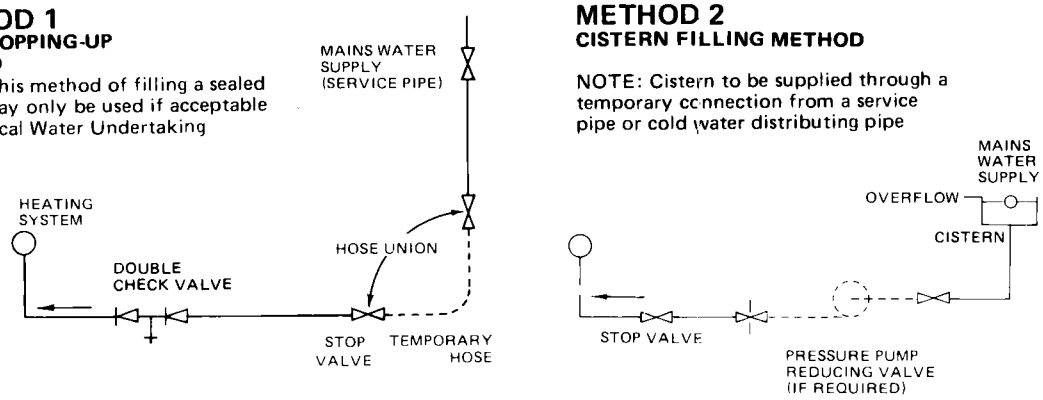

Fig 7

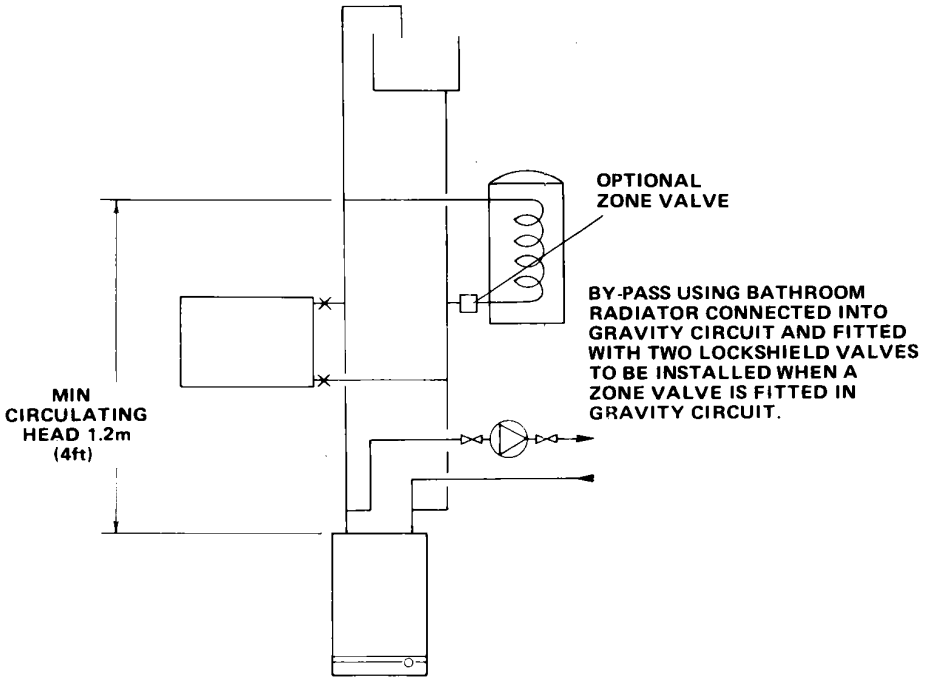

Fig 8

INSTALLATION INSTRUCTIONS - Page 11

It is the law that all gas appliances are installed and serviced by Competent persons as stated in Gas Safety (Installation and Use) Regulations 1994.
For Health and Safety information see back page.

Electrical installation and servicing should be carried out by a competent person in accordance with the I.E.E. Wiring Regulations.

The boiler and its associated equipment will arrive on site in two cardboard cartons. The contents of each carton is as follows.

CARTON 1:-
Boiler
Template
Literature Pack Containing:-
- Installation and Servicing Instructions
- User's Instructions
- Control Systems Pipework and Wiring Guide

Auxiliary Pack Containing:-
- Boiler Mounting Bracket
- Gas Service Cock and Accessory Packs
- Spring Clip

CARTON 2, FLUE SYSTEM PACK:-
STANDARD OR 1 METRE HORIZONTAL FLUE SYSTEMS
- Air/Flue Duct Assembly (length as ordered)
- Flue Elbow Extension
- Flue Terminal
- Flue Sealing Collar
- Rope Sealing Ring
- Side Infill Panels-2 off

1 METRE VERTICAL FLUE SYSTEM (consists of two cartons)
- Air/Flue Duct Assembly
- Flue Terminal
- Side Inf ill Panels-2 off
- Terminal Cowl
- Vertical Flue Adapter
- Accessory Pack
- Flue Installation Instructions

Optional Components will be supplied in Separate Cartons

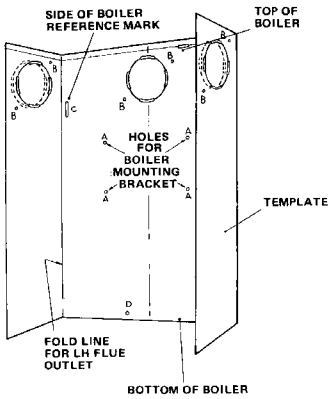

Fig. 9 TEMPLATE

Place template in proposed boiler position ensuring it is level (the minimum side clearances are automatically allowed for).

REAR FLUING

Mark holes 'A', 'B', 'D', age flue outlet hole and side of boiler reference lines through slots 'C'.

SIDE FLUING

Mark holes positions 'A', 'D' and side of boiler reference lines through slots 'C'.

Extend Horizontal line from top of the boiler to side wall.

Mark large flue outlet hole and holes 'B' using the thick lines on the template for minimum clearance at the rear of the boiler and the thin dotted lines for maximum clearance. See NOTE on FIG. 1.

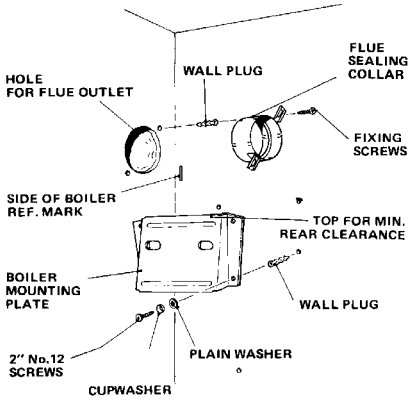

Fig. 10 BOILER MOUNTING PLATE

Remove template and carefully cut flue outlet hole through wall. If necessary make good around hole to enable holes 'B' to be drilled. (If internal flue fitment kit is being used refer to instructions supplied with kit).

Drill holes 'A' using a 7 mm drill

Drill holes 'B' and 'D' using a 5 mm drill

Using wall plugs, screws and washers (accessory pack A) attach boiler mounting plate to wall. Ensure that it is level and the correct way up, i.e. to provide the clearance at the rear of the boiler allowed for when marking out using the template. See also NOTE on FIG. 1.

Insert wall plugs into holes 'B' (accessory pack B) and hole 'D' (accessory pack D). Bend the tags to 90 deg. and insert flue sealing collar into wall and secure with screws and washers provided, (accessory pack B). Make good the internal wall surface around flue sealing collar.

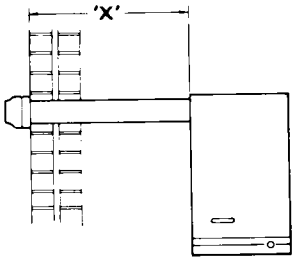

Fig. 11a SIDE FLUE

1. Measure from outside face of wall to the side of boiler casing reference line (dimension 'x').
2. Take air/flue duct assembly and measuring from the flanged end, mark and cut the outer duct and inner flue duct to dimension 'x' plus 20mm. Ensure that both ducts are cut squarely.

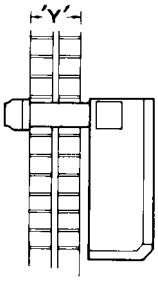

Fig. 11b REAR FLUE

1. Measure wall thickness (dimension 'Y').
2. Take air/flue duct assembly and measuring from the flanged end, mark and cut the outer air duct and inner flue duct to dimension 'Y', plus 45 mm. Ensure that both ducts are cut squarely.

NOTE
Cutting length remains the same for minimum or maximum clearance at the rear of the boiler.

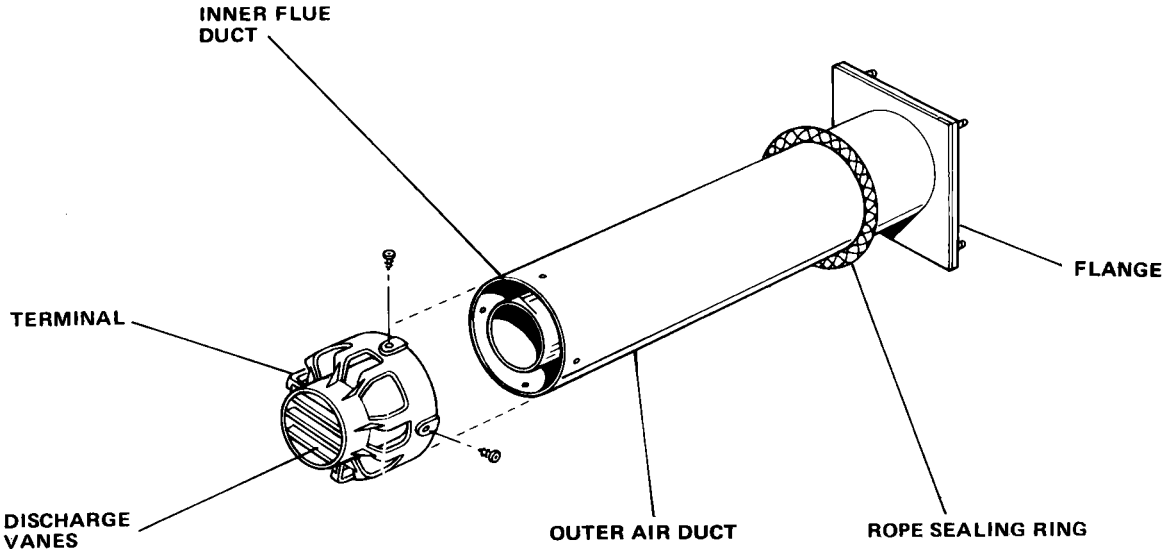

Fig. 12 AIR/FLUE DUCT ASSEMBLY

1. Slide rope sealing ring on to air duct.
2. Engage the terminal on to the ends of the inner flue duct and press fully home.
3. Engage four screws from accessory pack 'C' into the pre-drilled holes in the terminal and screw fully home. These screws which are self drilling will pierce the air duct and secure the terminal to air duct.

spares & parts online IBASIS.CO.UK

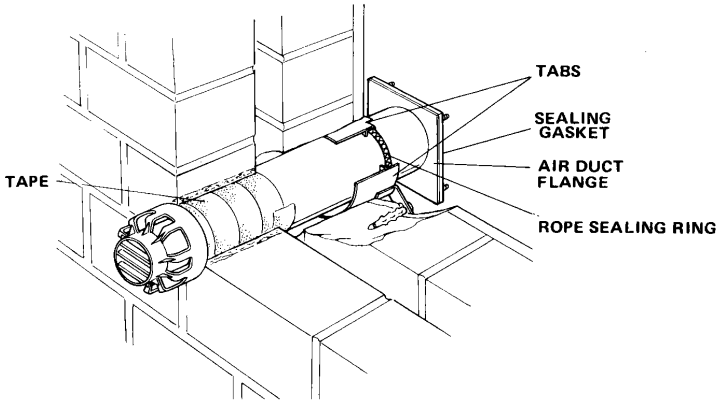

FIG. 13 SECTIONAL VIEW OF AIR/FLUE DUCT ASSY THROUGH WALL

4. Protect duct where it is likely to come into contact with wet mortar by using adhesive tape provide (accessory pack E).

5. Insert the assembly into the wall sliding the rope sealing ring along the air duct into the flue sealing collar. Bend the six tabs on flue sealing collar inwards to retain the rope sealing ring. Ensure air duct flange studs do not obstruct lifting of boiler onto mounting bracket and that the vanes of terminal are pointing in the desired direction.

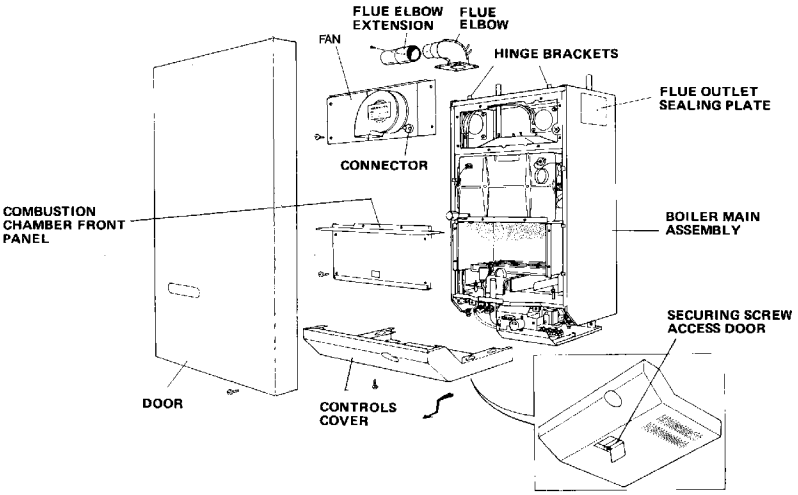

FIG. 14 PREPARING BOILER

The controls cover should have been removed when unpacking the boiler, if not remove controls cover by opening the door covering the securing screw on the underside of the controls cover, see FIG. 14. Undo securing screw, pull controls cover forward 10mm, lower to release from the four side fixings and pull forward clear of the thermostat knob.

Remove door by undoing the two lower fixing screws and lift door off the two upper hinge brackets.

Remove the screws securing the combustion chamber front panel and remove panel.

Disconnect the fan supply leads from the connector adjacent to the fan. Leaving in place the three screws identified with a red circle or adjacent ‘F’ mark in Fan Plate, remove the remaining screws securing the fan mounting plate and remove the mounting plate complete with fan.

Disconnect the two flexible tubes from the flue elbow.

Remove the four brass securing nuts and lift off the flue elbow, taking care not to damage the gasket.

NOTE:

If side fluing, loosen the two brass securing nuts beneath the flue elbow outlet and remove the other two. Tilt the flange and withdraw the elbow.

The boiler is supplied with the left hand flue outlet sealing plate removed. If another flue outlet direction is required, remove the appropriate flue outlet sealing plate and transfer it to the left hand position.

LIFTING THE BOILER

Lift the boiler onto its mounting bracket.

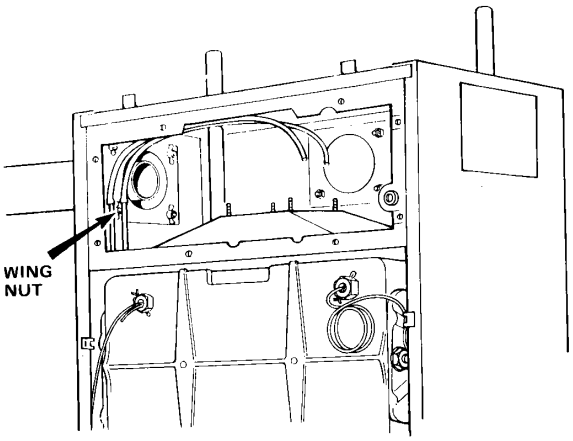

FIG. 15

Position boiler on its mounting bracket so that the sides of the boiler line up with the reference lines ‘C’ on the rear wall.

Undo the two screws securing the transportation foot and discard foot. Vertical alignment with rear wall can be corrected using the adjustment screws at the rear of the boiler. See FIGS. 16 & 17.

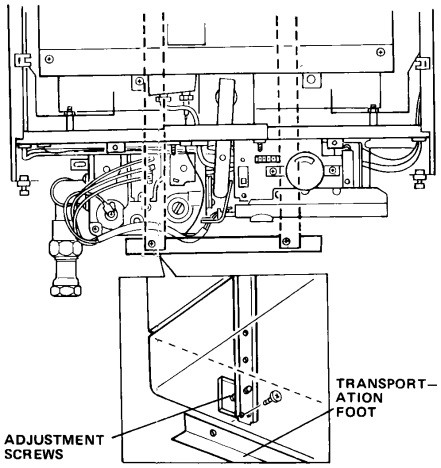

FIG. 16 TRANSPORTATION FOOT

Locate the studs on the air duct flange through the boiler casing and secure using four wing nuts (accessory pack F).

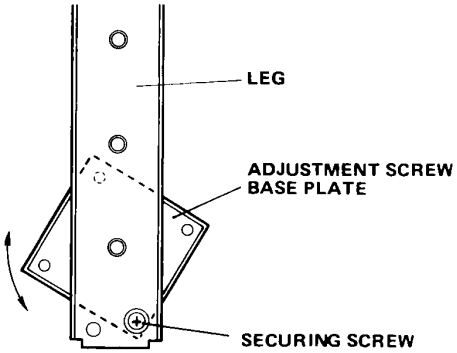

Fig. 17 SECURING BOILER

Rotate the left hand adjustment screw to align one of the holes in the base plate with hole ‘D’ in the wall. Working through the hole in the leg, secure the base plate to the wall using the screw from accessory pack ‘D’.

Make good the wall surface around the flue terminal. Fit optional terminal wall plate if required.

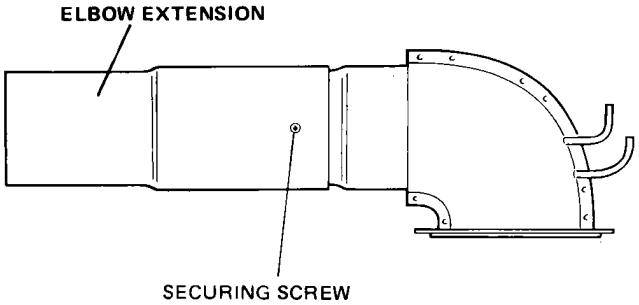

Fig. 18 FLUE ELBOW EXTENSION

When side fluing, slide the elbow extension on to the elbow and ensure that it is pushed on fully. Engage the screw from accessory pack ‘C’ into the pre-drilled hole in the elbow extension and screw fully home. The screw which is self drilling will pierce the elbow and secure the extension to the elbow.

When rear fluing, the elbow extension should be discarded.

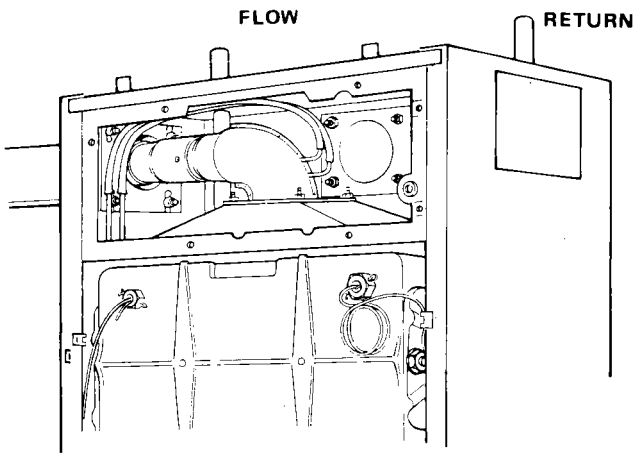

FIG. 19 LOCATION OF PRESSURE SENSING TUBES

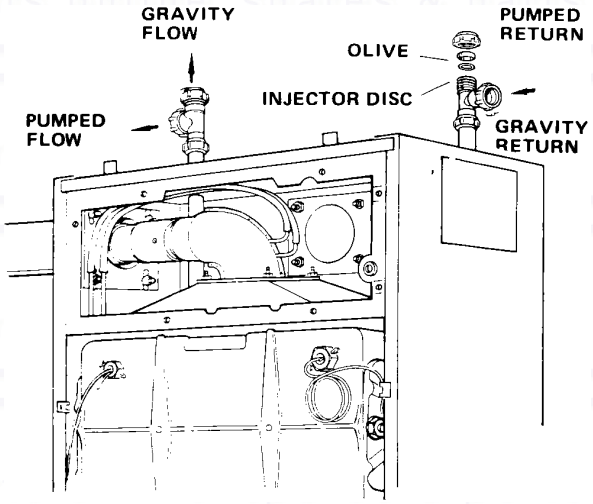

FIG 20. PIPE CONNECTIONS

If the boiler is to be used on a gravity DHW system refer to Page 16, overheat thermostat positioning before fitting the flue elbow.

Slide the flue elbow into the flue duct and locate the flange over the studs on the fluehood ensuring that the sealing gasket is in place. Secure the elbow to fluehood using the four brass securing nuts. Reconnect flexible tubes to elbow. ENSURE THEY ARE NOT KINKED. NOTE: Red tube connects the front aluminium tube in upper chamber to the lower connection on elbow, each being identified with a red ring.

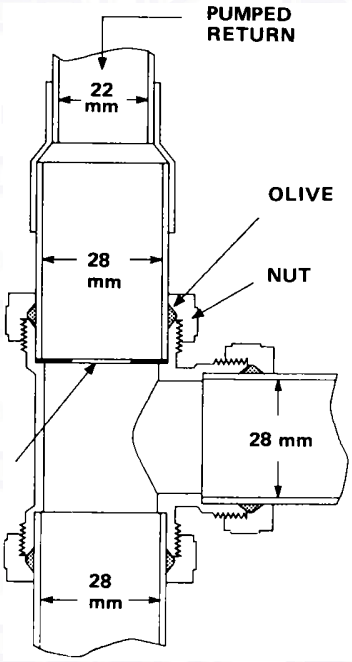

FIG. 20B

Connect system pipework to the boiler, compression fittings are recommended. A drain off tap should be installed close to the boiler if it is in a low point of the system.

On combined gravity hot water/pumped central heating installations the flow and return pipes for both the gravity hot water circuit and pumped central heating circuit must be connected to tees fitted directly to the flow and return pipes on the boiler

The gravity circuit should be installed in 28mm copper pipe. 28mm tees should be used.

The injector disc (accessory pack H) must be positioned in the pumped return branch of the tee and the pipes connected to the tees as illustrated in Figs. 20 and 20B. Two discs are provided, use the larger and discard the other.
Connect the gas supply pipe to the inlet of the gas cock, connect the boiler service cock to the inlet of the gas valve. Ensure that the gas cock is in a position where it can be easily operated when the controls cover is removed.

WARNING: UNDER NO CIRCUMSTANCES SHOULD A 'REDUCING SET' BE FITTED

OVERHEAT THERMOSTAT POSITIONING

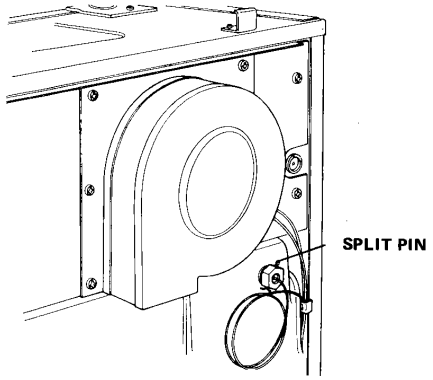

Fig. 21A FULLY PUMPED POSITION

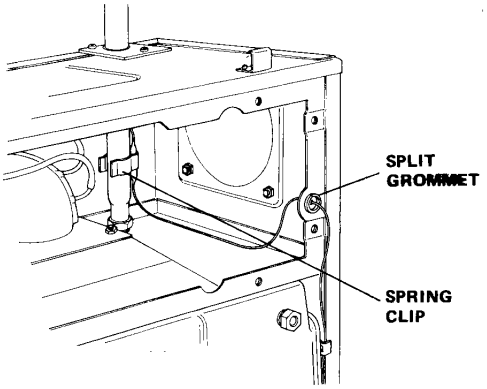

Fig. 21B GRAVITY DHW POSITION

If the boiler is fitted with a right hand flue, remove flue elbow as described in Section 1 preparing the Boiler for Servicing operations F, G, page 22.

NOTE: This boiler is dispatched with the overheat thermostat bulb positioned for FULLY PUMPED OPEN VENTED OR SEALED systems. ONLY if the boiler is to be used on a GRAVITY DHW system should the bulb of the overheat thermostat be repositioned as described below, to prevent nuisance operation of the overheat thermostat. If boiler is fitted to a fully pumped system the spring clip in the auxiliary pack can be discarded.

1. Remove split pin retaining overheat thermostat (Fig. 21A) and pull bulb from pocket along with spacer, discard spacer and split-pin.
2. Carefully remove excess heat conductive paste from bulb.
3. Remove split grommet at the top right hand side of the casing (Fig. 21 B).
4. Carefully uncoil capillary and pass bulb through grommet retaining hole, then attach to return pipe using spring clip contained in auxiliary pack.
5. Refit grommet ensuring that it makes a good seal around the capillary. Ensure that the capillary is secure in clips provided. Refer to Fig. 2.
6. ENSURE that the system change-over switch in the control box is set in GRAVITY DHW position.

ELECTRICAL

The boiler and all external control circuit wiring must be supplied from the same single isolating switch and should be fused at 3A.

Care must be taken to ensure that all wiring to the boiler is kept clear of sharp edges and hot surfaces.

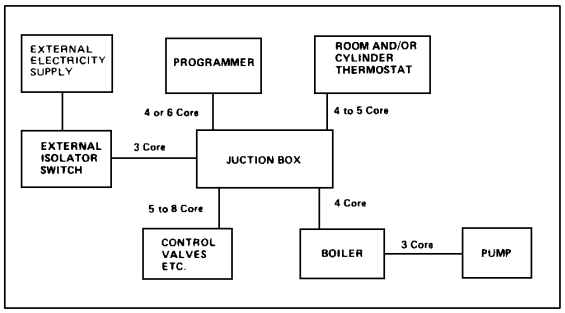

FIG. 22 PRINCIPLE OF WIRING

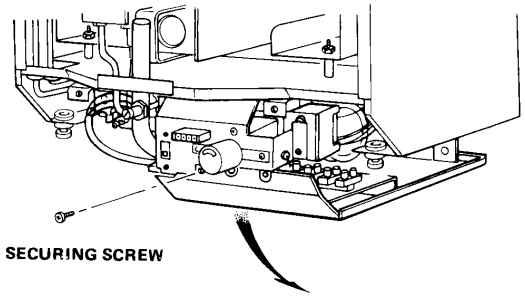

FIG. 23 ACCESS TO THE BOILER ELECTRICAL TERMINAL BLOCK

The boiler terminal block which is situated in the control box is not designed to accept wiring from all the on site controls and therefore the installer will usually need to incorporate a suitable junction box. This may not be required if a Potterton Electronic Programmer is used as this incorporates a junction box. The principle of wiring is shown in FIG. 22.

Further information on wiring of system controls can be found in the Control System, Pipework and Wiring Guide.

Remove control box securing screw and lower the control box to gain access to the boiler terminal block.

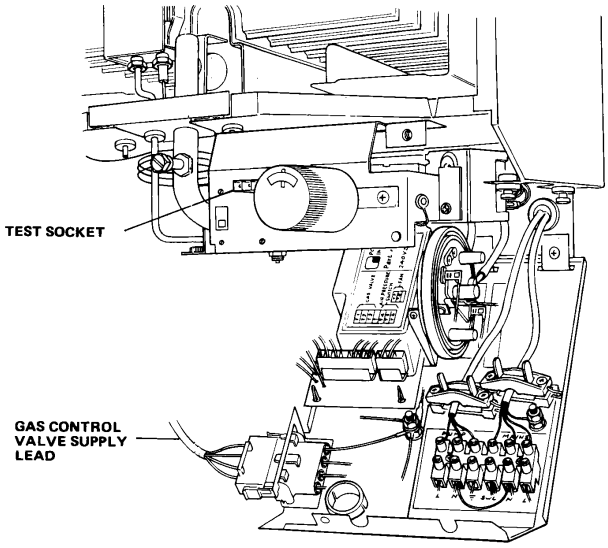

FIG. 24 ROUTING OF ELECTRICAL WIRING

Following the pump manufacturer's instructions connect the pump supply wires to terminals marked PUMP L, N, ⏚ on the boiler terminal block. Route the cable through the plastic bush in the rear of the control box as illustrated in FIG. 24 and secure, using the cable clamp.

Route a four core cable through the plastic bush in the rear of the control box and the cable clamp as illustrated in FIG. 24 and connect it to the boiler input terminals as follows:—

Fully Pumped Systems.

Permanent live to terminal marked MAINS 'L'.
Neutral to terminal marked MAINS 'N'.
Earth to terminal marked .'⏚' adjacent to cable clamp. See NOTE.
Switched live from external controls to terminal marked MAINS 'SwL'.
If there are no external controls fitted connect the SwL terminal to permanent live in the junction box.

Gravity Domestic Hot Water/Pumped Central HeatIng Systems.

Switched live from external gravity domestic hot water control circuit to terminal marked MAINS 'SwL'. Switched live from external pumped central heating control circuit to terminal marked MAINS 'L'.
Neutral to terminal marked MAINS 'N'.
Earth to terminal marked '⏚'adjacent to cable clamp. See NOTE.

If there are no external controls fitted connect the SwL and L terminals to permanent live in the junction box.

NOTE:
Ensure that the earth conductor is longer than the L, N & SwL from the point of anchorage, so that the current carrying conductors become taut before the earth conductor if cable is pulled out of the cable clamp. When the wiring has been completed close the control box and replace the securing screw.

FITTING SIDE INFILL PANELS

If required, the gap between the casing sides and rear wall can be closed off using the infill panels supplied.

Ensure the casing surface is FULLY CLEAN AND DRY. Remove the protective backing paper from the adhesive strip on the infill panel, carefully align and press into place, applying FIRM EVEN pressure down the FULL LENGTH of contact area between panel and case. If conditions are near freezing, the boiler case should be warmed prior to application of the infill panel.

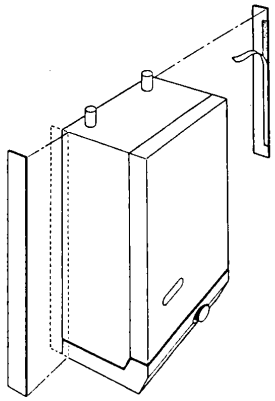

FIG. 25

Open Vented Systems

Remove the pump and flush out the system thoroughly with cold water. Refit the pump. Fill and vent the system. Examine for leaks.

Sealed Systems

NOTE:

The system can be filled using a sealed system filler pump with a break tank or by any other method approved by the Local Water Authority. Refer to 'THE SYSTEM' section Page 8 in these instructions, also B56798 1987.

Remove pump and flush out the system thoroughly with cold water. Refit the pump. Fill and vent the system until the pressure gauge registers 1.5 bar (21.5 lbf/in2). Examine for leaks. Raise the pressure until the safety valve lifts. This should occur within ± 0.3 bar of the preset lift pressure of 3 bar. Release water to attain the correct cold fill pressure, and set the indicator on the water gauge to this value.

All Systems

Refit the fan assembly and reconnect the fan supply leads, (polarity of the fan leads is not important).

The whole of the gas installation including the meter should be inspected and tested for soundness and purged in accordance with the recommendations of BS 6891.

Test pilot unions for gas soundness as follows:—
Turn boiler thermostat to the 'O' position.

Unplug the gas control valve supply lead from the control box and plug it into the test socket adjacent to the boiler thermostat knob, see FIG. 24.

Turn on gas at the gas service cock.

Ensure that the time control if fitted is in an ON condition, and that the room and/or cylinder thermostats where fitted are set to high temperatures.

Switch on the external electricity supply to the boiler.

Gas will flow to the pilot only. It will not be ignited as the ignition system is de-energised.

Using a leak detection fluid, check pilot unions for gas soundness.

Turn off the external electricity supply and gas service cock.

Remove gas control valve plug from the test socket and refit the plug into the socket on the left hand side of the control box see FIG. 24.

Refit the combustion chamber front panel.

Fit the case door into position by lifting it onto the top hinge brackets and secure it with the lower two fixing screws.

Remove the temporary label from the front of the casing, having checked compliance with the information it contains.

First Lighting

WARNING: Before lighting the boiler, ensure that the CASE DOOR HAS BEEN CORRECTLY FITTED and that the sealing strip fitted to the case door is forming a tight seal with the main boiler casing. Before proceeding to light the boiler, check that the external electricity supply to the boiler is switched off and that the boiler thermostat is in the '0' position.

Turn on the gas service cock.

Ensure that the pump and radiator isolating valves are open.

Ensure that the time control, if fitted is in an on condition, and that the room and/or cylinder thermostats, where fitted are set to high temperatures.

Switch on to the external electricity supply to the boiler.

After installation of the appliance, preliminary electrical system checks must be carried out. The checks to be carried out are:-

A. Earth Continuity
B. Short Circuit
C. Polarity
D. Resistance to Earth

Refer to Fault Finding Chart FIG. 31

Turn the boiler thermostat on and to a high setting and after a period of time the main burner will light, this can be observed through the sight glass in the front cover of the boiler. The time period can vary upwards of 45 seconds, depending on the amount of air in the pipework.

Test for gas soundness around the boiler components using leak detection fluid.

Turn the boiler thermostat to '0'.

NOTE:

There could be a delay in lighting if the control knob is switched on and off and then on again rapidly.

SETTING AND CHECKING OF CONTROLS

With the controls cover removed.

Fit a pressure gauge to the pressure test nipple in burner supply pipe. See FIG. 2.

Turn on the boiler thermostat and ensure that the main burner is alight. Check that the burner pressure is in accordance with values stated under TECHNICAL DATA.

The burner pressure is set to the maximum output at the factory.

If burner pressure adjustment is necessary proceed as follows, referring to FIG. 26.

S.I.T. Valve - Remove the plastic cover from the valve and turn the screw beneath clockwise to decrease the pressure or anti-clockwise to increase the pressure.

White Rodgers Valve - Remove the brass cover screw from the gas control valve and turn the screw beneath clockwise to increase the pressure or anticlockwise to decrease the pressure.

spares & parts online IBASIS.CO.UK

WHITE RODGERS

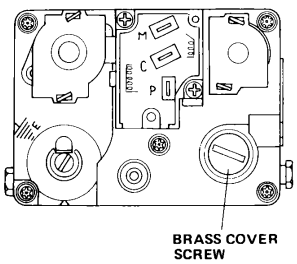

S.I.T.

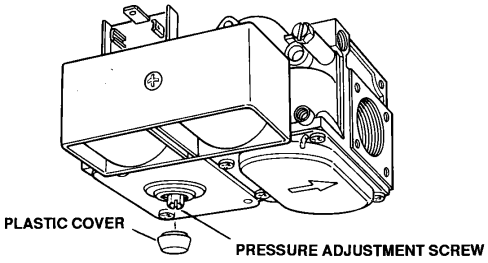

FIG. 26 MAIN BURNER PRESSURES ADJUSTMENT

With the burner set to its correct pressure, the firing rate given in TECHNICAL DATA should also be obtained and this should be checked by meter reading at least 10 minutes after the main burner has been lit. When the pressure and rate are correct, replace the adjustment screw cover.

Shut down the boiler remove the pressure gauge and refit the screw in the test nipple ensuring that a gas tight seal is made.

Remove the self-adhesive arrow from the inspection ticket tied to the burner supply pipe and stick it to the Data Plate inside the controls cover to indicate the appropriate burner setting pressure.

Refit the controls cover, and secure with screw.

Relight the boiler and heat the system to maximum. Check for water leaks, turn the boiler off, drain the system whilst hot.

Refill the system and on sealed systems adjust to the correct cold fill pressure. Set the pressure gauge pointer to the system design pressure.

If a by-pass circuit is fitted the by-pass valve should be adjusted with the boiler operating under minimum load conditions to maintain sufficient water flow through the boiler to ensure that the overheat thermostat does not operate under normal operating conditions.

Pilot Burner

The pilot is pre-set and no adjustment is required. The pilot flame envelope should cover the electrode tip and spark earthing strip see FIG. 30. If the pilot flame is not as illustrated, remove and clean the pilot as described in the Servicing Instructions Section 3, PILOT BURNER, Page 22.

Boiler Thermostat

At its minimum and maximum settings, the thermostat should control the water flow temperature at approximately 55ºC-82ºC (130ºC-180ºF).

The thermostat has been calibrated by the makers and no attempt should be made to re-calibrate it on site. Turn on the boiler thermostat and ensure that the main burner is alight. Turn the thermostat to the ‘O’ position and check that the main burner shuts down.

Gravity Hot Water/Pump Over-Run Thermostat

The function of this thermostat is determined by the position in which the GRAVITY/FULLY PUMPED SYSTEM selection switch is set. The thermostat is preset and no adjustment is possible.

On the FULLY PUMPED switch position it will operate as a pump over-run thermostat and will keep the pump running after the boiler has shut down, as long as the water temperature within the boiler is above approximately 80ºC.

On the GRAVITY switch position it will operate in series with the boiler thermostat when only the gravity domestic hot water circuit is in operation.

It will over-ride the boiler thermostat when the water temperature within the boiler is above 80ºC.

Overheat Thermostat

The overheat thermostat is pre-set and no adjustment is possible. It will require manually resetting if an overheat condition occurs. Access to the reset button is through a hole in the underside of the controls cover, see FIG. 2.

NOTE: Interruption of the electrical supply to the boiler may also cause the overheat limit thermostat to operate.

Other Boiler Controls

All boiler mounted controls are designed so that if any fault should occur they will fail safe. No further setting or checking is necessary.

External Controls

Check that any other external control connected in the system, such as clocks and thermostats, control the boiler as required.

User’s Instructions

A User’s Instructions leaflet is provided with this boiler but the householder must have the operation of the boiler and system explained by the Installer. The householder must also be advised of the importance of annual servicing and of the precautions necessary to prevent damage to the system and building, in the event of the system remaining out of commission in frost conditions.

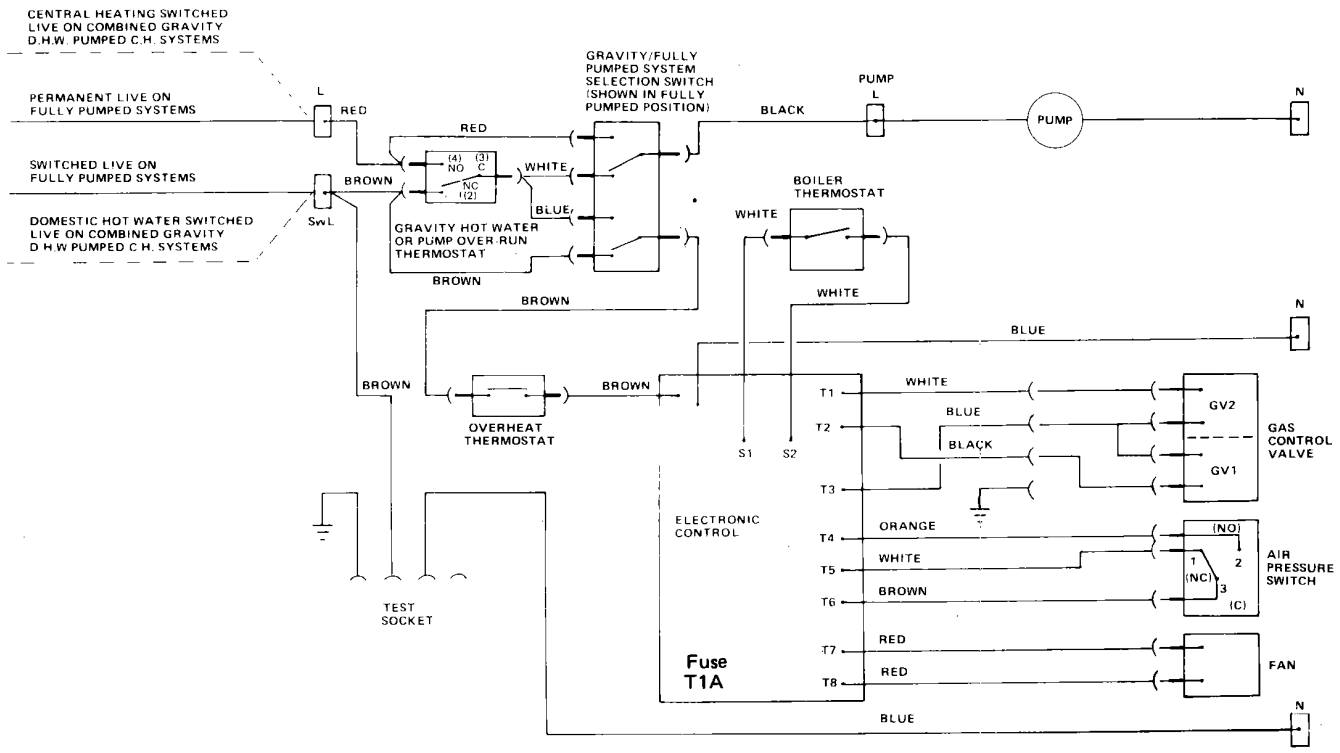

Fig. 27 FUNCTIONAL FLOW DIAGRAM

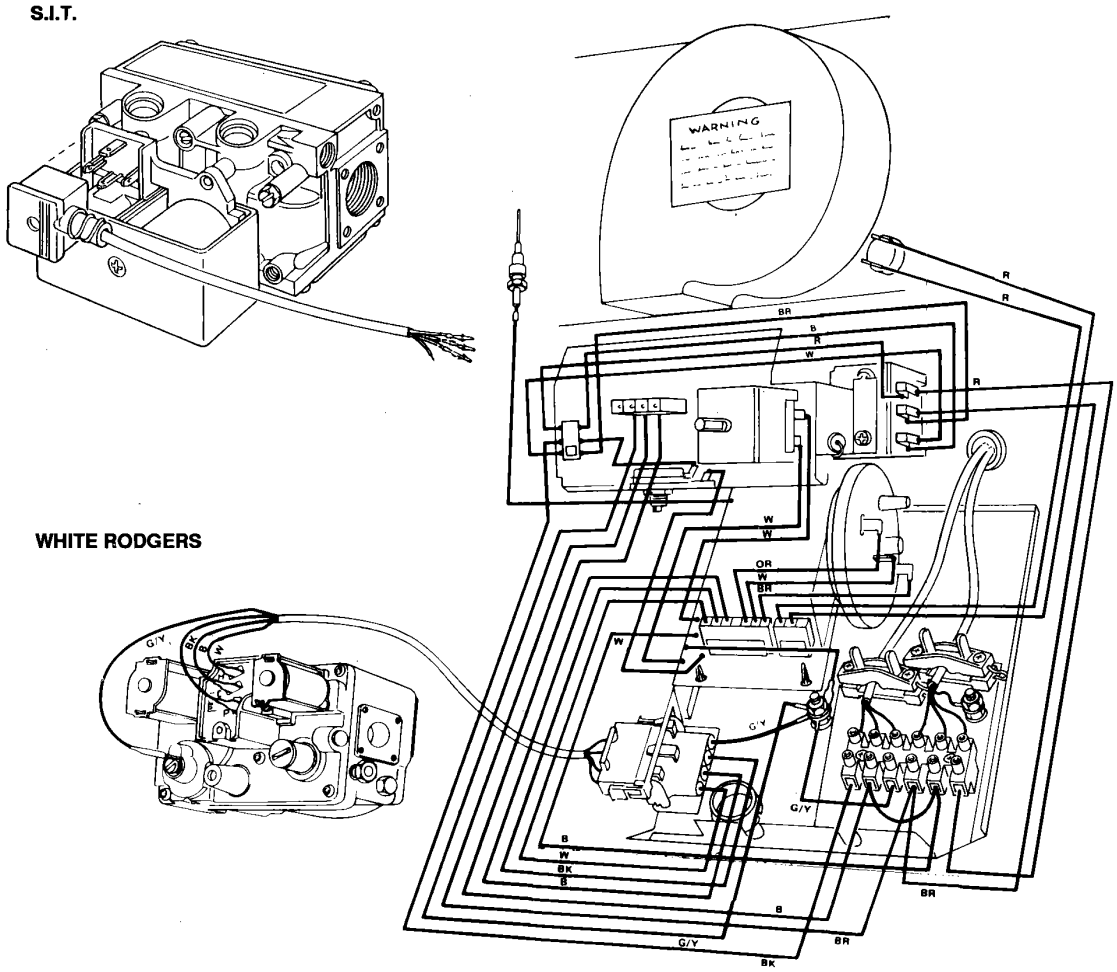

Fig. 28 BOILER WIRING DIAGRAM

Regular skilled servicing and cleaning of the appliance is essential to ensure continued safe and efficient operation. The frequency of cleaning will depend upon the particular installation conditions, and the use to which the appliance is put, but in general, once per year should be adequate.

It is the law that all gas appliances are installed and serviced by competent persons as stated in Gas Safety (Installation and Use) Regulations 1994.

For Health and Safety information see back page.

Electrical installation and servicing should be carried out by a competent person in accordance with the I.E.E. Wiring Regulations.

Servicing is best arranged by a contract placed with Potterton Myson Ltd., and further details are available from Service Operations at Warwick.

The boiler DATA PLATE and WIRING DIAGRAM are attached to the inside of the controls cover. The boiler CODE NUMBER which should be quoted when ordering spares or requesting information is on the front of the control box. See FIG. 2.

All parts likely to require servicing are readily accessible. By removing the cover from the boiler controls and removing the front door from the boiler, most components are exposed. Remove the front of the combustion chamber to gain access to the main and pilot burner and the ignition electrode. Removing of the fan and its mounting plate exposes the flue system, i.e. the flue elbow and fluehood. These must be removed to gain access to the flueways in the heat exchanger for cleaning.

The following notes apply to the boiler and its controls but it should be remembered that attention must also be paid to the heating circuit itself including radiator valves, thermostats, the time control and the expansion and feed water system. It is advisable to clean the boiler immediately after the end of the heating season.

In all cases prior to servicing, light up the boiler and check that the pilot and main burners have a clean, even flame and that the gas rate and main burner pressure are correctly set. If the pilot flame is satisfactory, no further servicing of the pilot burner is necessary and the information given in '3. PILOT BURNER' can be ignored.

WARNING

Before the start of any servicing work, switch off at the external electricity supply by disconnecting the supply plug at the socket or switching off the external isolating switch. Turn off the boiler gas service cock.

NOTE: After completing any servicing or replacement of components check for gas soundness and carry out functional checks.

1. **PREPARING THE BOILER FOR SERVICING**
   See FIG. 14.
   NOTE: Boilers with side or rear flues have a flue elbow fitted to the fluehood.
   The elbow is replaced by an adapter on vertically flued boilers.
   A. Remove controls cover by opening the door covering the securing screw on the underside of the controls cover, see FIG. 14. Undo securing screw, pull controls cover forward 10mm, lower it to release it from its four side fixings and pull forward clear of the thermostat knob.

   B. Remove door by undoing the lower fixing screws and lift door off the two upper hinge brackets.

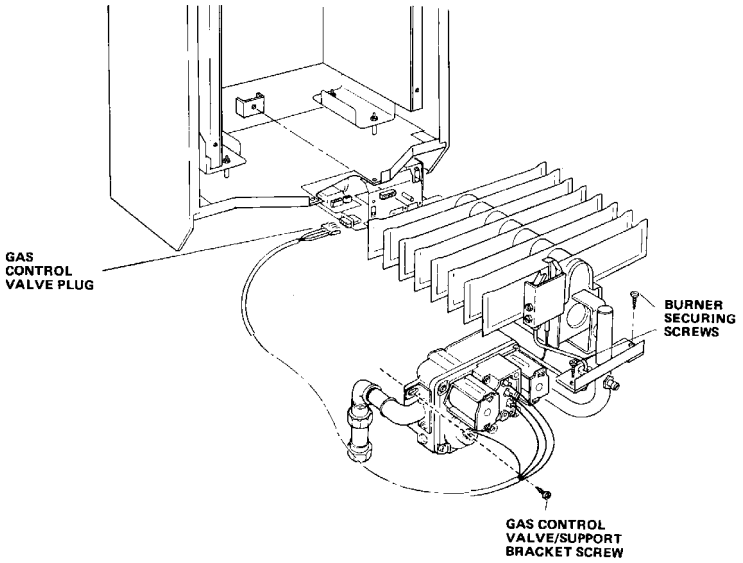

Fig. 29 BURNER AND GAS CONTROL ASSEMBLY
(White Rodgers valve illustrated)

C. Remove screws securing the combustion chamber front panel and remove panel.

D. Disconnect the fan supply leads from the connector adjacent to the fan.

E. Remove the screws securing the fan mounting plate leaving in place . the three screws identified with a red circle or adjacent 'F' mark in Fan Plate. Remove mounting plate complete with fan.

F. Disconnect the two flexible tubes from the flue elbow or adapter.

G. Loosen the two brass securing nuts beneath the flue elbow outlet and remove the other two. Tilt the flange and withdraw the elbow. Take care not to damage the gasket. On vertically flued boilers remove the four brass nuts and slide the vertical flue adapter up into the flue duct.

H. Unscrew the four nuts and lift off the fluehood taking care not to damage the rope seal. Lower and lift out vertical flue adapter, if applicable.

I. Undo the union on the gas service cock outlet.

J. Unplug the electrical supply leads for the gas control valve from the control box. See FIG. 29.

K. Remove the screw securing the gas control valve to its support bracket. See FIG. 29.

L Disconnect electrode lead from electrode.

M. Remove two screws securing the burner assembly to the bottom of the boiler case and lift out the burner and gas control assembly.

2. HEAT EXCHANGER

A. Working from above and below the heat exchanger use a suitable cleaning tool and remove all deposits from between the fins. Slide vertical flue adapter into flue duct, if applicable.

B. Refit the fluehood, ensuring that the rope seal is undamaged and that a GOOD SEAL is made with the heat exchanger. Fully tighten the four nuts.

C. Slide the flue elbow into the flue duct or lower flue adapter and secure to the fluehood using four nuts. Ensure that the gasket between the fluehood and elbow or adapter is undamaged and a good seal is obtained.

D. Reconnect flexible tubes to elbow or adapter.
NOTE: Red tube connects the front aluminium tube in the upper chamber to the lower connection on elbow or adapter each being identified with a red ring.

3. PILOT BURNER

The following operations are only necessary if the pilot flame is distorted .or the wrong size, i.e. too small.

A. Unscrew the steel: pilot tube from the pilot assembly. Take care not to damage the electrode.

B. Unscrew the two hexagonal head screws securing the pilot and shield to the main burner and remove the pilot assembly, be careful that the pilot injector does not fall out during this operation.

C. Lightly brush the pilot and its shield to remove any deposits.

Remove the pilot injector and clean its orifice or replace.

NOTE: Do not use a wire brush or pin to clean injector.

D. Gently clean any deposits from the electrode.

E. Refit the pilot injector to the pilot burner and assemble the pilot to the steel tube.

F. Secure the pilot assembly to the main burner using two hexagonal screws.

G. Fully tighten the union nut connecting the steel tube to the pilot. Check for gas soundness at this joint by following the procedure described in the commissioning section of these instructions, Page 18.

H. Ensure that the spark gap is as illustrated in FIG. 30.

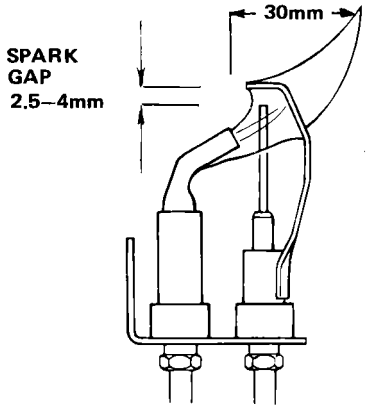

FIG. 30 PILOT BURNER SPARK GAP TOLERANCES

PILOT FILTER

The pilot burner is protected from blockage by a pilot filter situated within the gas control valve. The filter is large and designed to last the life of the gas control valve under normal operating conditions, it is therefore unlikely to need replacing. However in the event of pilot filter blockage being suspected the complete control valve should be replaced.

4. COMBUSTION CHAMBER INSULATION

A. Check the combustion chamber insulation for damage. If damage replace as described under removal replacement, of boiler mounted units.

5. MAIN BURNER

A. Lightly brush any deposits from the top of each blade and ensure there is no fluff in the entry of the burner venturi. If on re-assembly the burner flame picture is incorrect or the correct gas rate or burner pressure cannot be obtained, remove the burner and gas control assembly and thoroughly clean the burner. Clean or replace the injector. In the event of the above procedures not rectifying the flame appearance, disconnect the burner from the gas control valve at the flanged connection and replace the burner and injector.

B. Refit the burner and gas control valve assembly into the boiler, ensuring that the locating pin on the rear of burner engages correctly into the rear support bracket. Make sure that the sealing gasket is in place and undamaged between the burner flange and the case. Secure the assembly with two screws.

C. Refit the screw securing the gas control valve to the support bracket.

D. Reconnect electrode lead to electrode.

E. Plug gas control valve supply leads into control box.

F. Reconnect gas supply at gas service cock and turn on gas.

G. Refit the combustion chamber front panel.

6. FAN

A. Carefully clean any deposits from around the fan motor and its supports.

B. Very gently clean the fan impellor taking care not to damage the aluminium impellor or dislodge its balance weights.

C. Replace the fan and its mounting plate. Ensure that the securing screws are fully tightened as an air tight seal must be obtained between the fan assembly and the main boiler casing.

D. Reconnect the fan supply leads (polarity is not important).

7. CASE SEAL

Check the case door seal. Replace if damaged. The seal is simply pressed into the channel around the door.

8. RECOMMISSION

Following the full commissioning procedure as detailed in the COMMISSIONING section of these instructions page 18.

9. OTHER BOILER MOUNTED UNITS

No further servicing is required on any other boiler mounted units. Repair is by replacement.

10. FAULT FINDING

Refer to Fault Finding Chart FIG. 31 and Wiring Diagram FIGS. 27, 28.

REMOVAL/REPLACEMENT OF BOILER MOUNTED UNITS
GAS CONTROL VALVE
(Note: the White Rodgers and SLT. control valves are not Interchangable, and must be replaced like for like.)

Replacement is most easily carried out by first removing the burner and gas control valve assembly as follows:-

1. Switch oft the external electricity supply by disconnecting the plug at the socket or switching off the external isolating switch.

2. Remove controls cover, case door and combustion chamber front panel as described in 1. 'Preparing the Boiler for Servicing', operations A,B and C.

3. Remove the burner and gas control assembly as described in 1. Preparing the Boiler for Servicing', operations I, J, K, Land M.

4. Disconnect the electrical supply from the gas valve. Note: White Rodgers, has individual Wire positions. Refer to FIGS. 27 and 28.

5. Unscrew the union connecting the pilot supply pipe to the gas control valve.

6. Separate the gas control valve from the flange at the outlet port by removing the securing screws, remove two M4 screws retaining valve support bracket, unscrew gas inlet assembly at valve. Note: The S.I.T. valve is used in connection With a spacer and gasket.

7. Replacement is the reverse of removal. Ensure that the electrical connections are remade correctly - see diagram on page 20.

8. Follow the full commissioning proceedure as detailed in the COMMISSIONING section of these instructions. Page 18.

FAN

1. Switch off the external electricity supply by disconnecting the plug at the socket or switching off the external isolating switch.

2. Remove controls cover and case door as described in 1. 'Preparing the Boiler for Servicing', operations A and B.

3. Disconnect the fan supply leads from the connector adjacent to the fan.

4. Remove the screws securing the fan to the mounting plate and remove fan.

5. Replacement is the reverse of removal.

6. Following the full commissioning procedure as detailed in the COMMISSIONING section of these instructions. Page 18.

MAIN BURNER

1. Switch off the external electricity supply by disconnecting the plug at the socket or switching off the external isolating switch.

2. Remove controls cover, case door and combustion chamber front panel as described in 1. 'Preparing the Boiler for Servicing', operations A, B and C.

3. Remove the burner and gas control assembly as described in 1. 'Preparing the Boiler for Servicing', operations I, J, K, L and M.

4. Unscrew the union nuts connecting the pilot supply pipe to the pilot and gas control valve. Take care not to damage the electrode and be careful that the pilot injector does not fall out during this operation.

   Remove sealing grommet and withdraw the pilot tube through the hole in the burner mounting flange.

5. Separate the burner from the gas control valve at the flanged connection by removing the four securing screws.

6. Unscrew the pilot, main burner injector and pressure test nipple from the burner.

7. Replacement is the reverse of removal.

8. Follow the full commissioning procedure as detailed in the COMMISSIONING section of these instructions. Page 18.

PILOT/IGNITION ELECTRODE

1. Switch off the external electricity supply by switching off the external isolating switch.

IBASIS.CO.UK spares & parts online

2. Remove controls cover, case door and combustion chamber front panel as described in A. 'Preparing the Boiler for Servicing', operations A, B and C.

3. Disconnect the electrode lead from electrode.
4. Unscrew the steel pilot tube from the pilot assembly. Take care not to damage the electrode.

5. Unscrew the two hexagonal head screws securing the pilot and shield to the main burner and remove the pilot assembly, be careful that the pilot injector does not fall out during this operation.

   Unscrew electrode retaining nut and withdraw the electrode.

6. Replacement is the reverse of removal. On re-assembly ensure that the spark gap is as illustrated in FIG. 30.

7. Follow the full commissioning procedure as detailed in the COMMISSIONING section of these instruction. Page 18.

COMBUSTION CHAMBER INSULATION

1. Switch off the external electricity supply by switching off the external isolating switch.

2. Remove main burner as described in 'Preparing the Boiler for Servicing', operations A, B, C, I, J, K, L, M.

3. Bend back retaining tabs and replace insulation. It is necessary to first remove the side insulation when replacing the rear.

4. Replacement is the reverse of removal.

5. Follow the full commissioning procedure as detailed in the COMMISSIONING section of these instructions. Page 18.

FUSE, ELECTRONIC CONTROL, PRESSURE SWITCH, BOILER THERMOSTAT, OVERHEAT THERMOSTAT, GRAVITY HOT WATER/PUMP OVERRUN THERMOSTAT.

The following initial operations 1-3 are necessary to remove and replace any of the above items.

1. Switch off the external electricity supply by switching off the external isolating switch.

2. Remove controls cover by opening the door covering the securing screw on the underside of the controls cover see FIG. 14. Undo securing screw, pull controls cover forward 10mm, lower it to release it from its four side fixings and pull forward clear of the thermostat knob.

3. Remove control box securing screw and lower control box.

FUSE 1 amp

4. The fuse is located on the electronic control and can be replaced by lifting it from its holder.

5. Replacement is the reverse of removal. Refer to FIGS. 27, 28.

ELECTRONIC CONTROL

4. Disconnect six way plug, two way plug and electrode lead from the electronic control. Refer to FIGS. 27, 28.

   Disconnect the flying leads of the electronic control as follows:-

   white wires from the control thermostat

   brown wire from overheat thermostat

   blue wire from boiler terminal block connection N

   green/yellow wire from earth post.

5. Release the control by lifting it from the four retaining lugs.

6. Remove electronic control.
7. Replacement is the reverse of removal. NOTE: Polarity of electrical connections on thermostat is not important.

8. Follow the full commissioning procedure as detailed in the COMMISSIONING section of these instructions. Page 18.

PRESSURE SWITCH

4. Remove the screw securing the pressure switch to the bracket in the control box. Lift pressure switch from bracket.

5. Disconnect the two plastic tubes. NOTE: the red tube is connected to the pressure switch connection identified with a red ring, or adjacent red spot.

6. Disconnect the three electrical leads, white wire from terminal No. 1, orange from terminal No. 2 and brown from terminal No 3. Refer to FIGS. 27, 28.

7. Replacement is the reverse of removal. Ensure that the plastic tubes are not kinked on re-assembly.

8. Follow the full commissioning procedure as detailed in the COMMISSIONING section of these instructions. Page 18.

OVERHEAT THERMOSTAT

NOTE: It is possible to sight the overheat bulb in two positions dependent on the type of system, (see page 16 Figs. 21 A, B) for which the methods of removal and replacement are described separately.

4. Remove door by undoing the two lower fixing screws and lifting door off the two upper hinge brackets.

5. Disconnect the two push on electrical connections from the overheat thermostat terminals.

6. Remove the nut securing the overheat thermostat to its mounting bracket.

FULLY PUMPED AND SEALED SYSTEMS

7. Noting the route taken by the capillary, remove the split pin retaining the thermostat bulb, spacer and withdraw bulb and spacer from its pocket. Remove the split grommet in the base of the boiler, feed the thermostat capillary and bulb through the hole.

8. Replacement is the reverse of removal. Ensure the rubber grommet in the base of the boiler makes a good seal around the capillary. Ensure that the capillary is secure in the clips provided. Refer to FIG. 2.

9. Follow the full commissioning procedure as detailed in the COMMISSIONING section of these instructions. Page 18.

GRAVITY DHW/PUMPED CENTRAL HEATING

NOTE: If the boiler is fitted with a right hand flue, remove flue elbow as described in Section 1 preparing the Boiler operations F, G, page 22.

7. Disconnect the fan supply leads from the connector adjacent to the fan.

8. Remove the screws securing the fan mounting plate leaving in place the three screws identified with a red circle or adjacent 'F' mark in Fan Plate. Remove mounting plate complete with fan.

9. Remove spring clip retaining overheat bulb to return pipe.

10. Remove two split grommets one at the top right hand side of the casing and one in the base of the boiler.

11. Withdraw bulb through the holes.

12. Replacement is the reverse of removal. Ensure the rubber grommets make a good seal around the capillary. Ensure that the capillary is secure in clips provided. Refer to Fig. 2.

13. Follow the full commissioning procedure as detailed in the COMMISSIONING section of these instructions. Page 18.

BOILER THERMOSTAT

4. Remove door by undoing the two lower fixing screws and lifting door off the two upper hinge brackets.

5. Disconnect the fan supply leads from the connector adjacent to the fan.

6. Remove the screws securing the fan mounting plate leaving in place the three screws identified with a red circle or adjacent 'F' mark in Fan Plate. Remove mounting plate complete with fan.

7. Disconnect the electrical connections as follows:-
two white from rear of thermostat Refer to FIGS. 27, 28.

8. Pull off the outer thermostat knob.

9. Remove inner thermostat post by undoing the two securing screws.

10. Remove the nut securing the thermostat to the control box.

11. If the boiler is fitted with a left hand flue, remove the flue elbow as described in Section 1 'Preparing the Boiler' operations F, G, Page 22.

12. Remove the clip securing the thermostat bulb to the flow pipe.

13. Remove the split grommet in the base of the boiler and the split grommet in the fan chamber. Feed the capillary and bulb through the holes.

14. Replacement is the reverse of removal. The bulb of the new thermostat should be coated with heat conducting paste. Ensure the rubber grommets in the base of the boiler and the fan chamber make a good seal around the capillary.

15. Ensure that the capillary is secure in the clips provided. NOTE polarity of electrical connections on thermostat is not important.

Follow the full commissioning procedure as detailed in the COMMISSIONING section of these instructions. Page 18.

GRAVITY HOT WATER/PUMP OVER-RUN THERMOSTAT.
Refer to FIG. 2.

4. Remove door by undoing the lower fixing screws and lifting door off the two upper hinger brackets.

5. Disconnect the electrical connections as follows:—

2 red wires from terminal NO or 4

2 brown wires from terminal NC or 2

1 white and 1 blue wire from terminal C or 3

6. Remove the screw securing the thermostat to the control box.

7. Remove the split pin retaining the thermostat bulb in the pocket and withdraw the bulb.

8. Remove the split grommet in the base of the boiler. Feed the capillary and bulb through the hole.

9. Replacement is the reverse of removal. The bulb of the new thermostat should be coated with heat conducting paste. Ensure the rubber grommet makes a good seal around the capillary.

10. Ensure that the capillary is secure in the clips provided. Follow the full commissioning procedure as detailed in the Commissioning section of these instructions. Page 18.

SIGHT GLASS

WARNING: GREAT CARE SHOULD BE TAKEN WHEN HANDLING AND DISPOSING OF A BROKEN SIGHT GLASS.

3. Remove door by undoing the lower fixing screws and lift door off the two upper hinge brackets.

4. Remove three M4 nuts from sight glass retainer and remove sight glass assembly, **see above.**

5. Replacement is the reverse of removal. Taking care that the clear circle in the sight glass lines up viewing hole in combustion chamber door. NOTE new gaskets must be used when sight glass is fitted.

TEST PROCEDURE FOR MEASURING FLAME CURRENT

White Rodgers Gas Valve

Disconnect the white wire from GV2 on gas control valve and connect it via a suitable test switch to neutral as shown. Set test switch to OFF. Insert an approved ammeter in series with the spark electrode.

Turn ON the electricity supply and restart the boiler.

NOTE:- The pilot will light but not the main boiler as GV2 is disconnected.

When the pilot is established set the test switch to ON.

This will stop the spark and allow a steady flame current to be measured.

TEST PROCEDURE FOR MEASURING FLAME CURRENT

S.I.T. Gas Valve

Switch off external power supply to boiler. Remove boiler door. Unplug the gas control supply lead from the control box and plug it into the test socket. (See FIG. 24).

Insert an approved ammeter in series with the spark electrode. Turn boiler thermostat to 'off'. Re-instate the external electricity supply. Gas will flow to the pilot only, which can now be lit manually enabling a steady flame current to be measured.

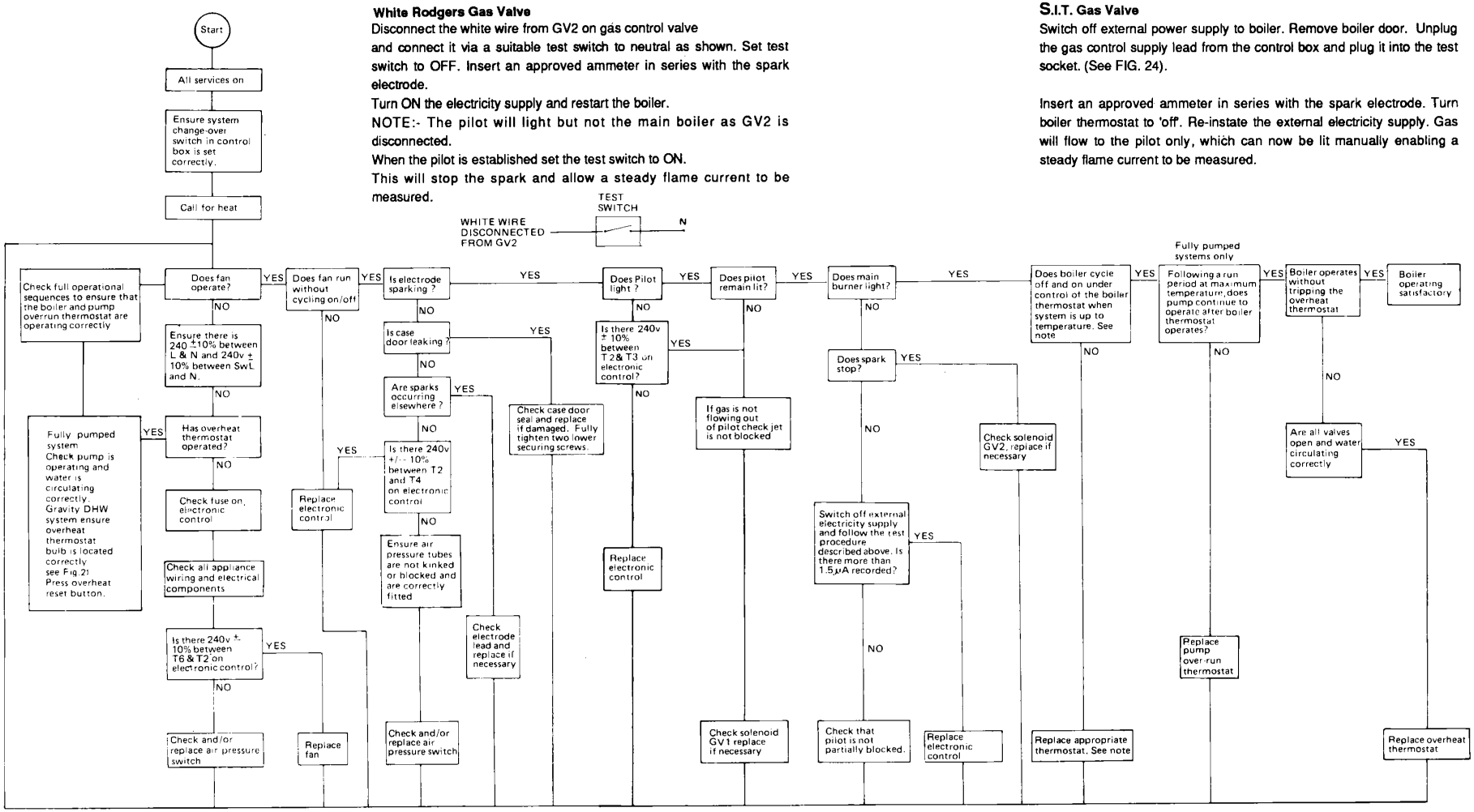

FLAME SUPERVISION TESTING

With the boiler running, turn off at the boiler thermostat. Temporarily restrict the pilot gas supply by fully screwing in the gas valve pilot screw clockwise. Turn on at the boiler thermostat; a spark will be present, indicating GV2 is electrically disconnected, and the boiler will not light. Now re-instate the pilot supply (three complete anti-clockwise turns); pilot and main boiler will light in the normal manner.

NOTE: When pumped central heating is in operation the boiler is controlled by the main boiler thermostat.

When only a gravity hot water circuit is in operation the boiler is controlled by the main boiler thermostat when set at No.4 or below. At setting above No.4 the temperature is limited by the operation of the gravity control thermostat.

Fig. 31 FAULT FINDING CHART

SHORT PARTS LIST - Page 27

KEY No.		P.I.L. Part No.	G.C. Part No.
1	Pilot and Electrode Assembly including items 2-4	212806	337 857
2	Pilot Injector	402915	381 656
3	Nut	402945	337 858
	Olive	402944	337 859
4	Electrode	402925	382 448
6	Electrode Lead	407698	337 863
8	Control Stat K36 L1014	907729	248 147
9	Gas Control Valve Kit (White Rodgers)	907702	382 988
10	Gas Control Valve Kit (S.I.T.)	909029	289 396
11	Gas Manifold 'O' Ring	401637	337 467
12	Gravity DHW/Pump Over-Run Thermostat CL8 P1510	404501	382 967
13	Flue Elbow Sealing Gasket	212084	337 424
14	Electronic Control	407677	382 462
15	Fuse (1 amp)	641903	336 585
16	Thermostat Knob	225251	337 370
17	Pressure Switch	642216	385 887
18	Fan	409573	337 860
19	Overheat Thermostat LM7 P8503	404506	385 888
20	Main Burner Gasket	212085	337 371
21	4.9mm Main Burner Injector Boiler	410980	387 861
22	Scraper	907736	337 862

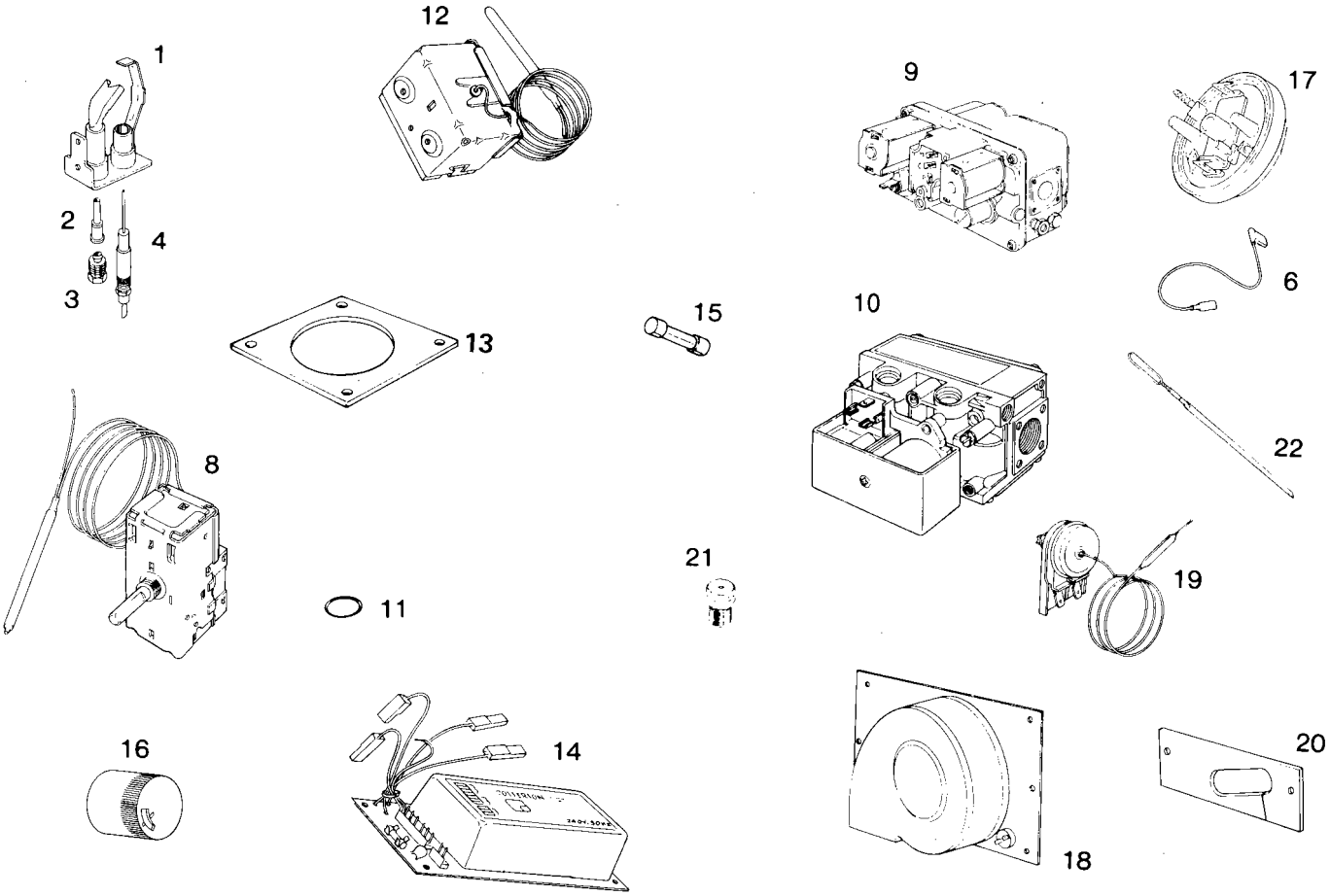

HEALTH AND SAFETY INFORMATION FOR THE INSTALLER AND SERVICE ENGINEER - Page 28

Under the Consumer Protection Act 1987 and section 6 of the Health and Safety at Work Act 1974, we are required to provide information on substances hazardous to health.

Small quantities of adhesives and sealants used in the product are cured and present no known hazards.

The following substances are also present.

Insulation & Seals

Material	—	Ceramic Fibre; Alumino — Silicone Fibre
Description	—	Boards, Ropes, Gaskets
Known Hazards	—	Some people can suffer reddening and itching of the skin. Fibre entry into the eye will cause foreign body irritation. Irritation to respiratory tract.
Precautions	—	People with a history of skin complaints may be particularly susceptible to irritation. High dust levels are only likely to arise following **harsh** abrasion. In general, normal handling and use will not present discomfort, follow good hygiene practices, wash hands before consuming food, drinking or using the toilet.
First Aid	—	Medical attention must be sought following eye contact or prolonged reddening of the skin.

Thermostat

Material	—	Contains very small quantity of xylene.
Description	—	Sealed phial and capillary containing liquid.
Known Hazards	—	Irritating to skin, eyes and throat. Vapour is harmful. Inflammable — do not extinguish with water.
Precautions	—	Do not incinerate. Avoid contact with broken/leaking phials. Do not purposely puncture.
First Aid	—	Eye/skin contact, wash with clean water, seek medical attention.