POTTERTON

Performa 24

Gas Fired Wall Mounted Combination Boiler

Installation and Servicing Instructions

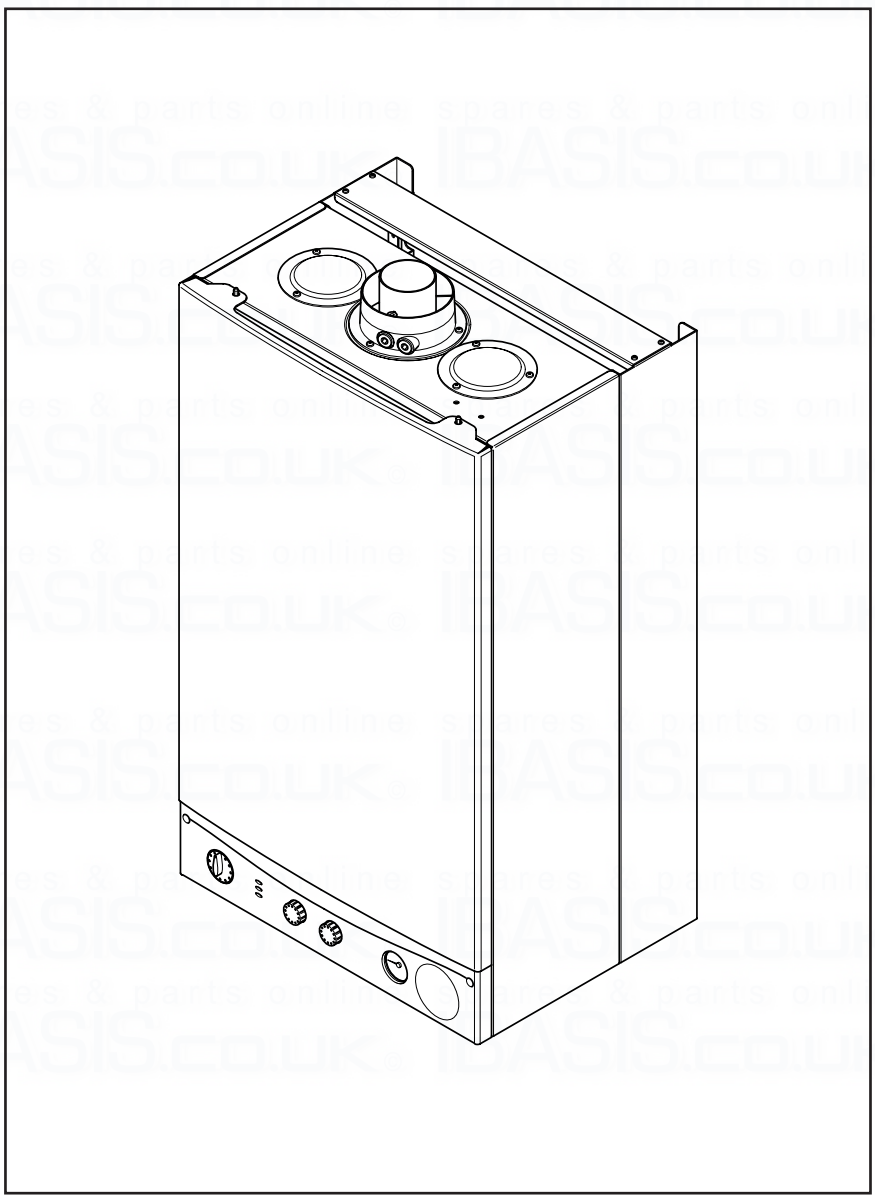

Please leave these instructions with the user

spares & parts online IBASIS.CO.UK

Natural Gas

Potterton Performa 24
G.C.N° 47 393 06

IPX4D

The boiler meets the requirements of Statutory Instrument " The Boiler (Efficiency) Regulations 1993 N° 3083" and is deemed to meet the requirements of Directive 92/42/EEC on the energy efficiency requirements for new hot water boilers fired with liquid or gaseous fuels:-

Type test for purpose of Regulation 5 certified by:
Notified Body 0051.

Product/Production certified by:
Notified Body 0051.

For GB/IE only.

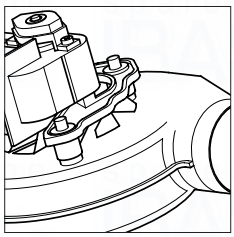

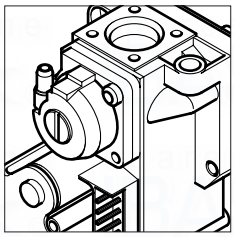

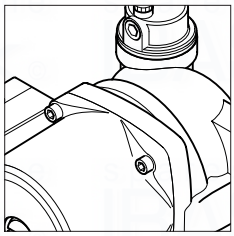

Contents

Section		Page
1.0	Introduction	4
2.0	General Layout	5
3.0	Appliance Operation	6
4.0	Technical Data	7
5.0	Dimensions and Fixings	8
6.0	System Details	9
7.0	Site Requirements	12
8.0	Installation	17
9.0	Commissioning the Boiler	22
10.0	Completion	24
11.0	Servicing the Boiler	25
12.0	Changing Components	27
13.0	Illustrated Wiring Diagram	36
14.0	Fault Finding	37
15.0	Short Parts List	42

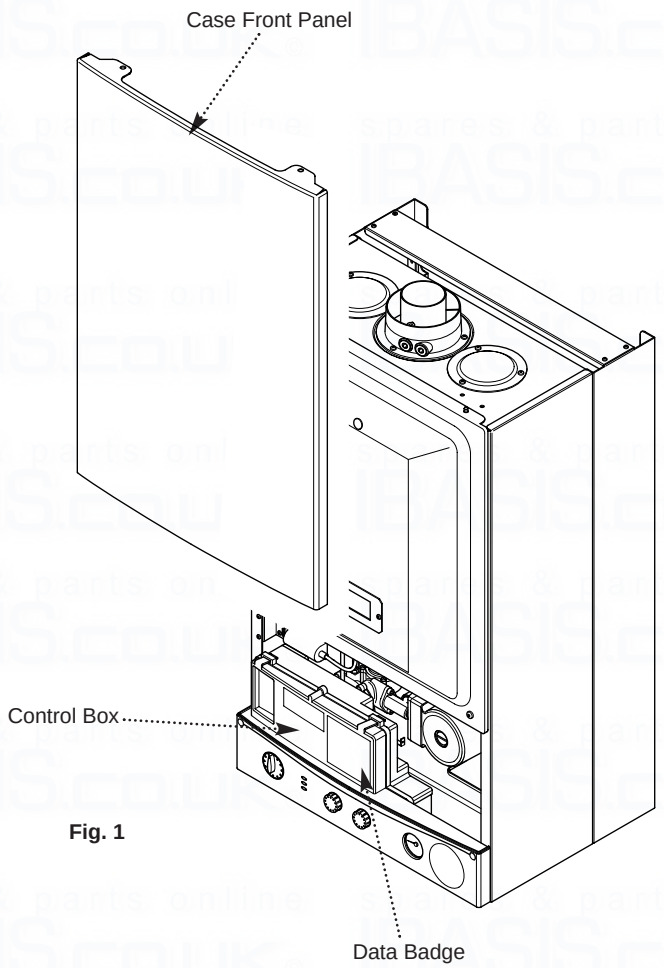

Fig. 1

NOTE: This appliance must be installed in accordance with the manufacturer's instructions and the regulations in force. Read the instructions fully before installing or using the appliance.

"Benchmark" Log Book

As part of the industry-wide "Benchmark" initiative all boilers now include an Installation, Commissioning and Service Record Log Book. Please read the Log Book carefully and complete all sections relevant to the appliance and installation. These include sections on the type of controls employed, flushing the system, burner operating pressure etc. The details of the Log Book will be required in the event of any warranty work. Also, there is a section to be completed at each subsequent regular service visit. The Log Book must be left with the user.

1.0 Introduction

Potterton declare that no substances harmful to health are contained in the appliance or used during appliance manufacture.

1.1 Description

1. The Potterton Performa 24 is a fully automatic gas fired wall mounted combination boiler. It is room sealed and fan assisted, and will provide central heating and mains fed domestic hot water.

2. The boiler is set to give a maximum output of 24.0 kW.

3. It is designed for use on Natural Gas (G20) and can be converted to use Propane or Butane.

4. The boiler is suitable for use only on fully pumped sealed heating systems. Priority is given to domestic hot water.

5. The boiler data badge gives details of the model, serial number and Gas Council number and is situated on the control box. It is visible when the case front panel is removed (Fig. 1).

6. The boiler is intended to be installed in residential / commercial / light industrial E.M.C. environments on a governed meter supply only.

7. The boiler must be installed with one of the purpose designed flues such as the standard horizontal flue kit, part no. 247719.

8. All systems must be thoroughly flushed and treated with inhibitor (see section 6.2).

1.2 Installation

1. The appliance is suitable for installation only in G.B. and I.E. and should be installed in accordance with the rules in force. For Ireland install in accordance with I.S.813 **"Installation of Gas Appliances"**. The installation must be carried out by a CORGI Registered Installer or other competent person and be in accordance with the relevant requirements of **Gas Safety** (Installation and Use) **Regulations**, the **Building Regulations** (Scotland) (Consolidation), the **Local Building Regulations**, the **Current I.E.E. Wiring Regulations** and the bye laws of the Local Water Undertaking. Where no specific instructions are given, reference should be made to the relevant **BRITISH STANDARD CODES OF PRACTICE.**

1.3 Optional Extras

1. Various flue extensions, bends, vertical flue kits, control accessories etc. are available as optional extras. These are detailed in a separate publication.

2.0 General Layout

2.1 Layout

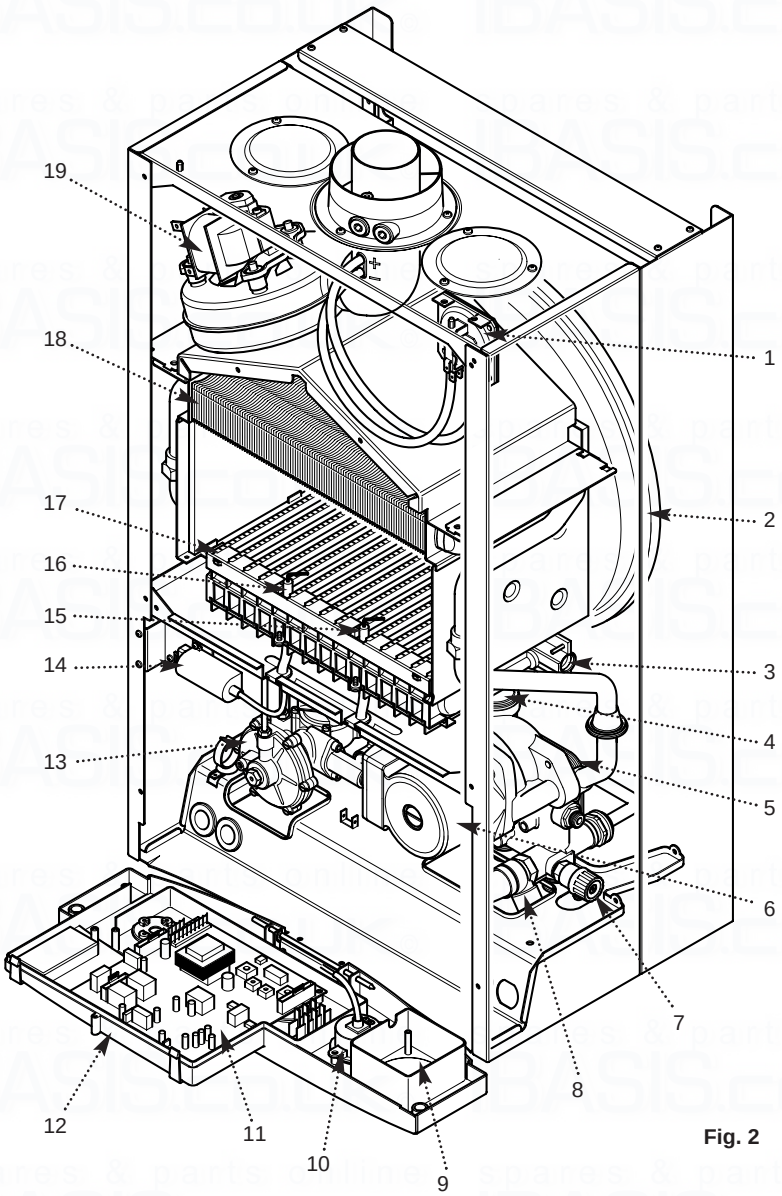

Fig. 2

1. Air Pressure Switch
2. Expansion Vessel
3. Burner Manifold
4. Automatic Air Vent
5. DHW Plate Heat Exchanger
6. Circulation Pump
7. Drain Off Point
8. Pressure Relief Valve
9. Optional Integral Timer Position
10. Central Heating System Pressure Gauge
11. Control PCB
12. Control Box
13. 3-Way Valve Assembly
14. Spark Generator
15. Flame Sensing Electrode
16. Spark Electrode
17. Burner
18. Primary Heat Exchanger
19. Fan Assembly
20. On / Off / Reset Selector Switch
21. Burner Neon
22. Power Neon
23. Reset Neon
24. Central Heating Temperature Control
25. Hot Water Temperature Control

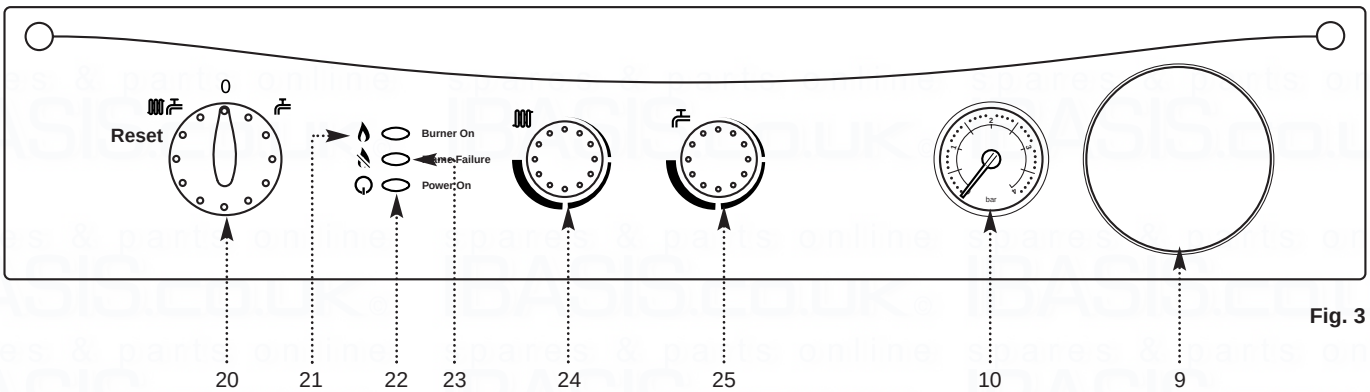

Fig. 3

spares & parts online IBASIS.COUK

Central Heating Circuit

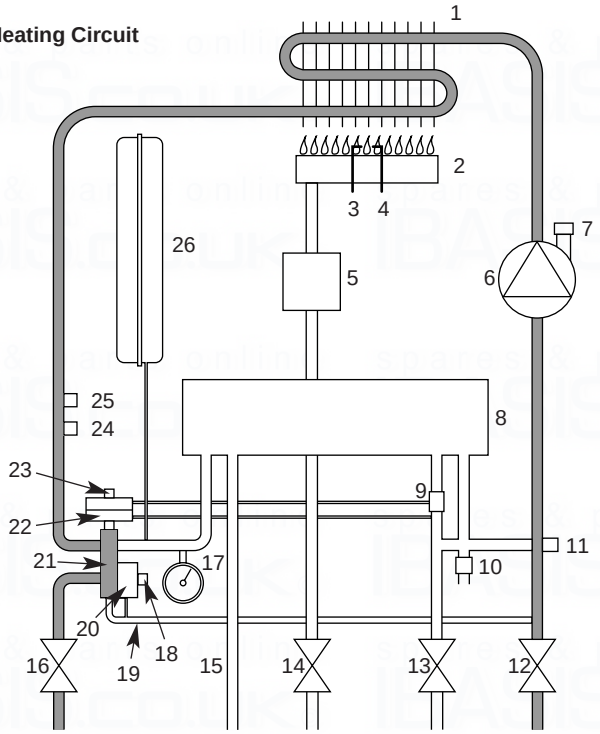

Fig. 4

Key

1 Primary Heat Exchanger
2 Burner
3 Ignition Electrode
4 Flame Sensing Electrode
5 Gas Valve
6 Pump
7 Automatic Air Vent
8 Plate Heat Exchanger
9 Flow Sensor with Filter
10 Pressure Relief Valve
11 Boiler Drain Point
12 Heating Return
13 Cold Water Inlet On/Off Valve and Filter
14 Gas Inlet
15 Domestic Hot Water Outlet
16 Heating Flow
17 Pressure Gauge
18 Hydraulic Differential Pressure Sensor Microswitch
19 Automatic By-Pass
20 Hydraulic Differential Pressure Sensor
21 Diverter Valve Assembly
22 Domestic Hot Water Flow Priority Assembly
23 Domestic Hot Water Flow Priority Microswitch
24 Temperature Sensor
25 Overheat Thermostat
26 Expansion Vessel

Domestic Hot Water Circuit

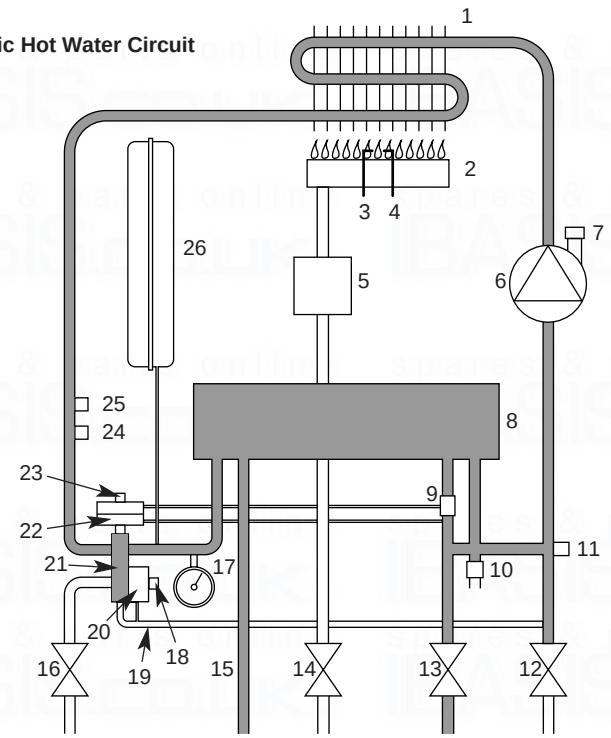

Fig. 5

3.0 Appliance Operation

NOTE: All delay timers mentioned in 3.1 and 3.2 are overridden by domestic hot water demand.

3.1 Central Heating Mode (Fig. 4)

1. With a demand for heating, the pump circulates water through the primary circuit. At a pre-determined flow rate the central heating flow switch operates, initiating the ignition sequence.

2. The main burner ignites at low rate, then the gas valve controls the gas rate to maintain the heating temperature measured by the temperature sensor.

3. When the flow temperature exceeds the setting temperature, a 3 minute delay occurs before the burner relights automatically (anti-cycling). The pump continues to run during this period.

4. When the demand is satisfied the burner is extinguished and the pump continues to run for a period of 30 seconds (Pump Overrun).

3.2 Domestic Hot Water Mode (Fig. 5)

1. Priority is given to the domestic hot water supply. A demand at a tap or shower will override any central heating requirement.

2. The flow of water will operate the DHW flow switch which causes the 3 way valve to change position. This will allow the pump to circulate the primary water through the DHW plate heat exchanger.

3. The burner will light automatically and the temperature of the domestic hot water is controlled by the temperature sensor.

4. When the domestic hot water demand ceases the burner will extinguish and the diverter valve will remain in the domestic hot water mode, unless there is a demand for central heating.

IMPORTANT: When the selector switch is in the '0' (Off) position the electrical supply to the boiler is isolated. The boiler will not operate and the integral timer (if fitted) will require resetting once the selector switch is turned to either the DHW or CH position.

Appliance Type		C_{12}	C_{32}
Appliance Category	CAT II $_{2H\ 3+}$		
Heat Input C/H & DHW (Gross)			
		Max	Min
	kW	26.3	10.6
	Btu/h	89,739	36,167
Heat Output		Max	Min
	kW	24.0	9.3
	Btu/h	81,891	31,732

Max Gas Rate (Natural Gas - G20) (After 10 Mins)

m^3/h	2.78
ft^3/h	98.12

Burner Pressure (Natural Gas - G20)

	Max Rate	Min Rate
mbar	12.2 ± 0.5	2.5 ± 0.2
in wg	4.88 ± 0.2	1.0 ± 0.2

Inlet Pressure (Natural Gas - G20)

mbar	20
in wg	8

Burner Injector (Natural Gas - G20)
12 x 1.28mm Diameter

Electrical Supply 230V~ 50H_Z
(Appliance must be connected to an earthed supply)

Power Consumption 170W

External Fuse Rating 3A

Internal Fuse Rating
Fuse 2A Fast Blow to BS 4265

Electrical Protection
IPX4D

NO_X Class	3	
Flue Terminal Dimensions	Diameter	100mm
	Projection	95mm

Connections		copper tails
Gas Supply	-	22mm
Central Heating Flow	-	22mm
Central Heating Return	-	22mm
Cold Water Mains Inlet	-	15mm
DHW Flow	-	15mm
Pressure Relief Discharge	-	15mm

Outercase Dimensions		
Casing Height	-	780mm
Overall Height Inc Flue Elbow	-	980mm
Casing Width	-	450mm
Casing Depth	-	345mm

Clearances

Both Sides	5 mm Min
Above Casing	200 mm Min
Below Casing	200 mm Min
Front	450 mm Min (For Servicing)
Front	5 mm Min (In Operation)

Weights	kg
Packaged Boiler Carton	46
Packaged Flue Kit	3
Installation Lift Weight	38.5

Central Heating Primary Circuit Pressures

	bar
Safety Discharge	3
Max Operating	2.5
Min Operating	0.5
Recommend Operating	1-2

Recommended System Temperature Drop	11°C	20°F

DHW Circuit Pressures	bar
Max Operating	8
Min Operating	0.2
Min Operating Pressure at 9.8 l/min	0.9

Flow Rates	l/min
DHW Flow Rate @ 30°C Rise	11.4
DHW Flow Rate @ 35°C Rise	9.8
Min Working DHW Flow Rate	2.5

Pump Grundfos 15-50
Available Head See graph below

Expansion Vessel - (For Central Heating only. Integral with appliance)

	bar
Pre-charge Pressure	0.5
	litre
Max Capacity of CH System	125
Primary Water Content of Boiler (unpressurised)	1.0

Temperatures
C.H. Flow Temp (adjustable)
35°C to 85°C max (± 5°C)

D.H.W. Flow Temp (adjustable)
35°C to 65°C max (± 5°C)
dependent upon flow rate

SEDBUK Declaration

The seasonal efficiency (SEDBUK) is 78.6%

This value is used in the UK Government's Standard Assessment Procedure (SAP) for energy rating of dwellings. The test data from which it has been calculated have been certified by 0051.

LPG Gases - Propane G31 Butane G31

Burner Injector 12 x 0.77mm diameter

Burner Pressure		Max Rate	Min Rate
Propane	mbar	36.2	6.4
	in wg	14.5	2.6
Butane	mbar	28.3	5.3
	in wg	11.3	2.1

Inlet Pressures	Butane	Propane
mbar	30	37
in wg	12	14.8

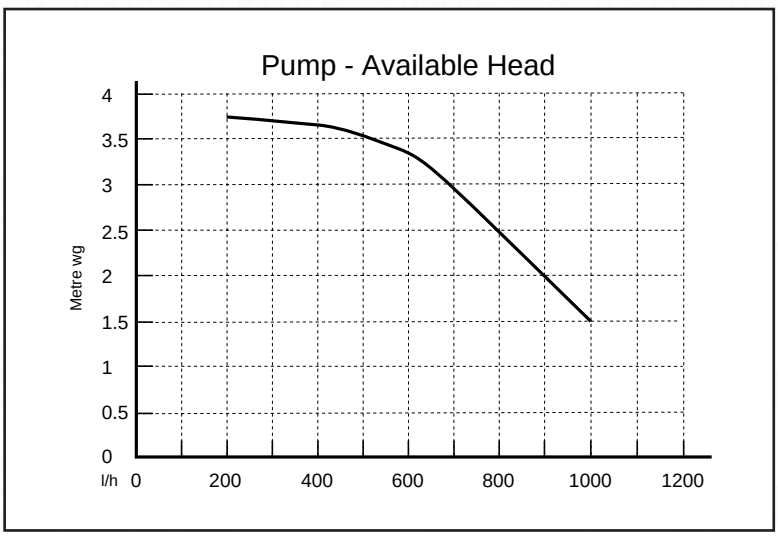

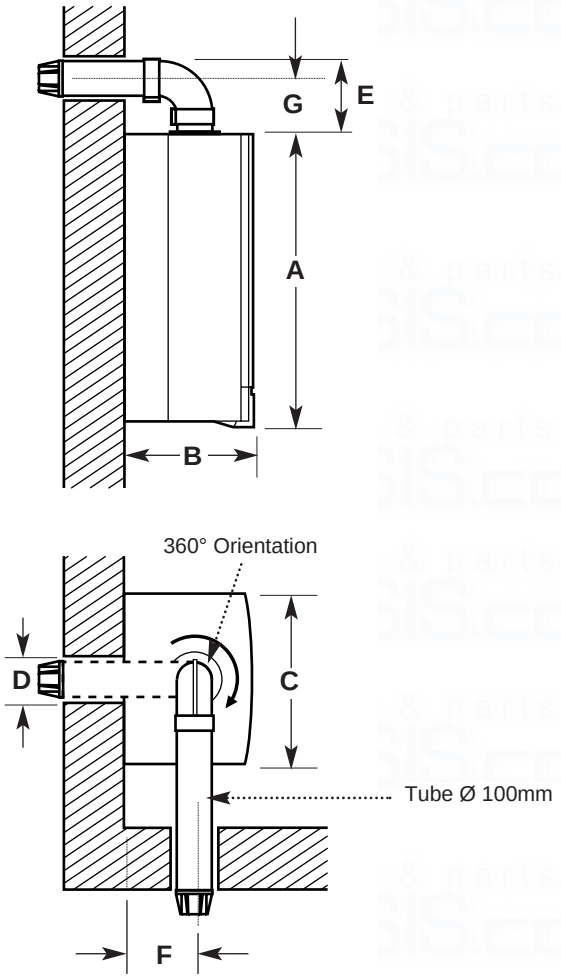

Fig. 6

Dimensions	
A	780mm
B	345mm
C	450mm
D	107mm Ø Min.
E	200mm
F	190mm
G	143mm

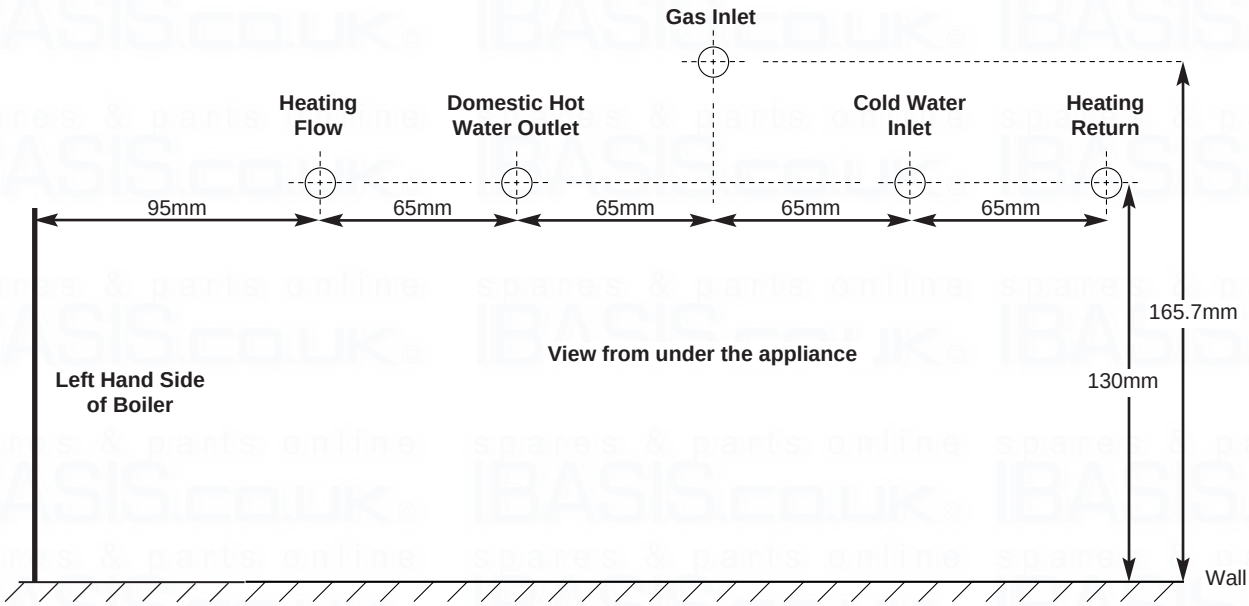

Fig. 7

6.0 System Details

6.1 Information

1. The Potterton Performa 24 Combination Boiler is a 'Water Byelaws Scheme - Approved Product'. To comply with the Water Byelaws your attention is drawn to the following installation requirements and notes (IRN).

a) IRN 001 - See text of entry for installation requirements and notes.

b) IRN 302 - Byelaw 14.

2. Reference to the WRc publications, 'Water fittings and materials directory' and 'Water supply byelaws guide' give full details of byelaws and the IRNs.

6.2 Central Heating Circuit

1. The appliance is suitable for fully pumped SEALED SYSTEMS ONLY.

Treatment of Water Circulating Systems

- All recirculatory water systems will be subject to corrosion unless an appropriate water treatment is applied. This means that the efficiency of the system will deteriorate as corrosion sludge accumulates within the system, risking damage to pump and valves, boiler noise and circulation problems.
- For optimum performance after installation this boiler and its associated central heating system must be flushed in accordance with the guidelines given in BS 7593 "Treatment of water in domestic hot water central heating systems".
- This must involve the use of a proprietary cleanser, such as BetzDearborn Sentinel X300 or X400, or Fernox Superfloc. Full instructions are supplied with the products, but for immediate information please contact BetzDearborn (0151 420 9563) or Fernox (01799 550 811) directly.
- For long term protection against corrosion and scale, after flushing it is recommended that an inhibitor such as BetzDearborn Sentinel X100, or Fernox MB-1 or Copal is dosed in accordance with the guidelines given in BS 7593.

Failure to flush and add inhibitor to the system may invalidate the appliance warranty.

- It is important to check the inhibitor concentration after installation, system modification and at every service in accordance with the manufacturer's instructions. (Test kits are available from inhibitor stockists.)

6.3 Bypass

1. The boiler is fitted with an automatic integral bypass.

6.4 System Control

1. The boiler is designed for use in a heating system that incorporates external controls, i.e. a minimum of a timer device.

2. An integral electro-mechanical or electronic timer is available as an optional extra.

3. For optimum operating conditions and maximum economy the fitting of a programmable thermostat is recommended.

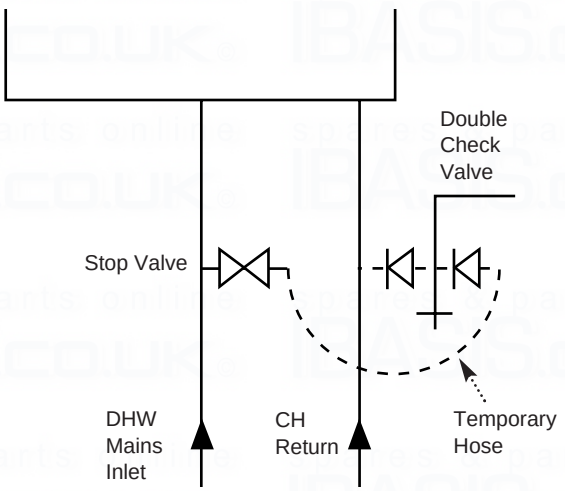

Fig. 8

6.5 System Filling and Pressurising

1. A filling point connection on the central heating return pipework must be provided to facilitate initial filling and pressurising and also any subsequent water loss replacement/refilling.

2. The filling method adopted must be in accordance with all relevant water supply bye-laws and use approved equipment.

3. Your attention is drawn to: IRN 302 and Byelaw 14.

4. The sealed primary circuits may be filled or replenished by means of a temporary connection between the circuit and a supply pipe, provided a 'Listed' double check valve or some other no less effective backflow prevention device is permanently connected at the inlet to the circuit and the temporary connection is removed after use (Fig. 8).

5. There are connection points on the mains cold water inlet and central heating return isolation taps to which the optional Filling Loop Kit (Part No 248221) can be fitted.

6.6 Expansion Vessel
(Central Heating only)

1. The appliance expansion vessel is pre-charged to 0.5 bar. Therefore, the minimum cold fill pressure is 0.5 bar. The vessel is suitable for correct operation for system capacities up to 125 litres. For greater system capacities an additional expansion vessel must be fitted - refer to BS 7074 Pt 1.

6.7 Pressure Relief Valve (Fig. 9)

1. The pressure relief valve is set at 3 bar, therefore all pipework, fittings, etc. should be suitable for pressures in excess of 3 bar.

2. The pressure relief discharge pipe should be not less than 15mm dia, run continuously downward, and discharge outside the building, preferably over a drain (Fig. 10). It should be routed in such a manner that no hazard occurs or causes damage to wiring or electrical components. The end of the pipe should terminate facing down and towards the wall.

3. The discharge must not be above a window, entrance or other public access. Consideration must be given to the possibility that boiling water/steam could discharge from the pipe.

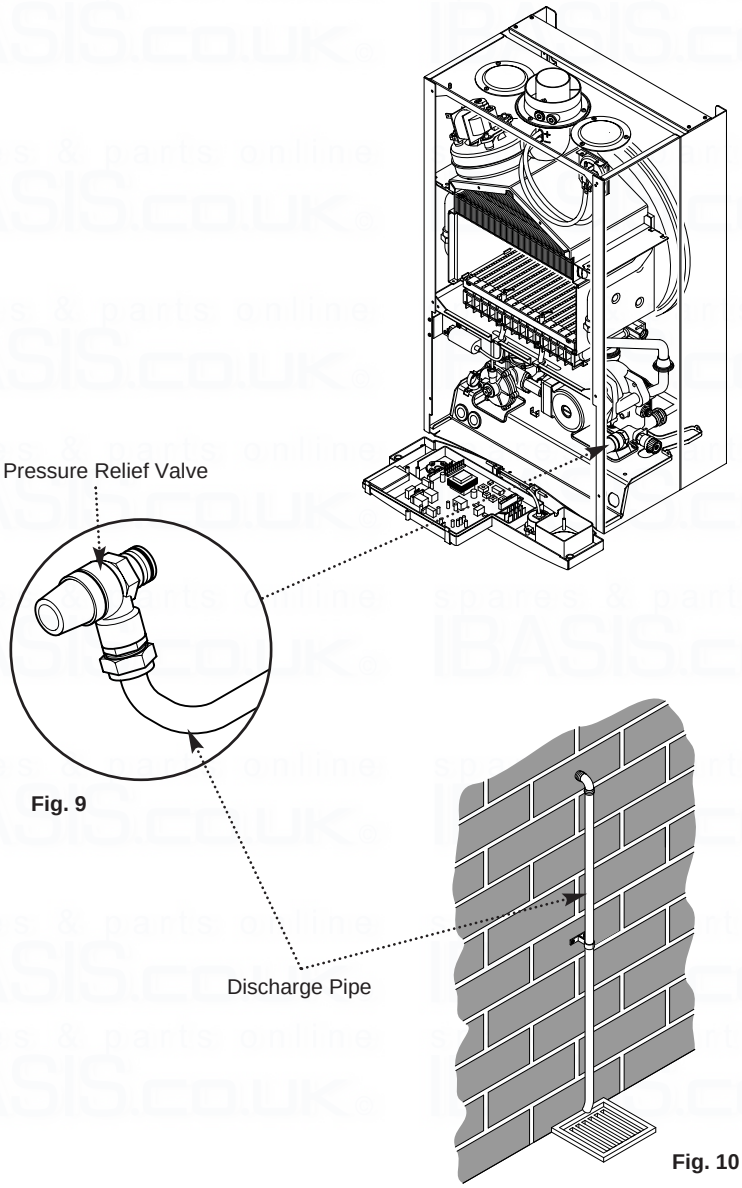

Fig. 9

Fig. 10

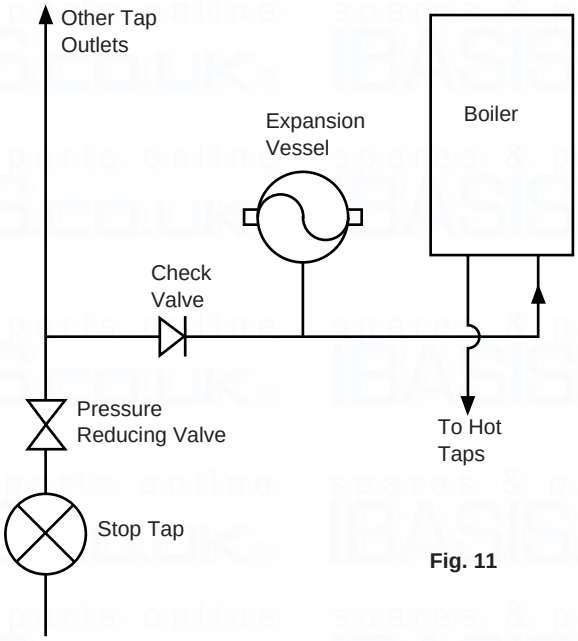

Fig. 11

6.8 Domestic Hot Water Circuit

1. All DHW circuits, connections, fittings, etc. should be fully in accordance with relevant standards and water supply bye-laws.

2. Your attention is drawn to:
IRN 116 and the Water Supply (Water Fittings) Regulations 1999 Schedule 2, Section 8, paragraph 17. Sealed primary circuits and/or secondary hot water systems shall incorporate a means for accommodating the thermal expansion of water to prevent any discharge from the circuit and/or system, except in an emergency situation.

3. When the system includes any device which prevents water expanding back towards the supply (check valve, loose jumpered stopcock, water meter, water treatment device), then an expansion vessel must be fitted (e.g. Zilmet 160ml, R1/2 15bar). A check valve must also be fitted on the supply as shown, to ensure efficient operation and also to prevent the reverse flow of hot water into the supply pipe.

4. If the hot water expansion is not provided for, then high pressures can develop which may result in damage to fittings and devices on the system.

5. The boiler's maximum working mains pressure is 8 bar, therefore all pipework, connections, fittings, etc. should be suitable for pressures in excess of 10 bar. A pressure reducing valve must be fitted for pressures in excess of 10 bar. The manufacturer of any outlet fittings, such as a shower valve, may require a lower maximum pressure. The pressure reduction must take account of all fittings connected to the DHW system.

6.9 Showers

1. If a shower control is supplied from the appliance it should be of the thermostatic or pressure balanced type. Thermostatic type shower valves provide the best comfort and guard against water at too high a temperature. Existing controls may not be suitable - refer to the shower valve manufacturer.

6.10 Hard Water Areas

1. If the area of the installation is recognised as a HARD WATER AREA then a suitable device should be fitted to treat the mains water supply to the boiler.

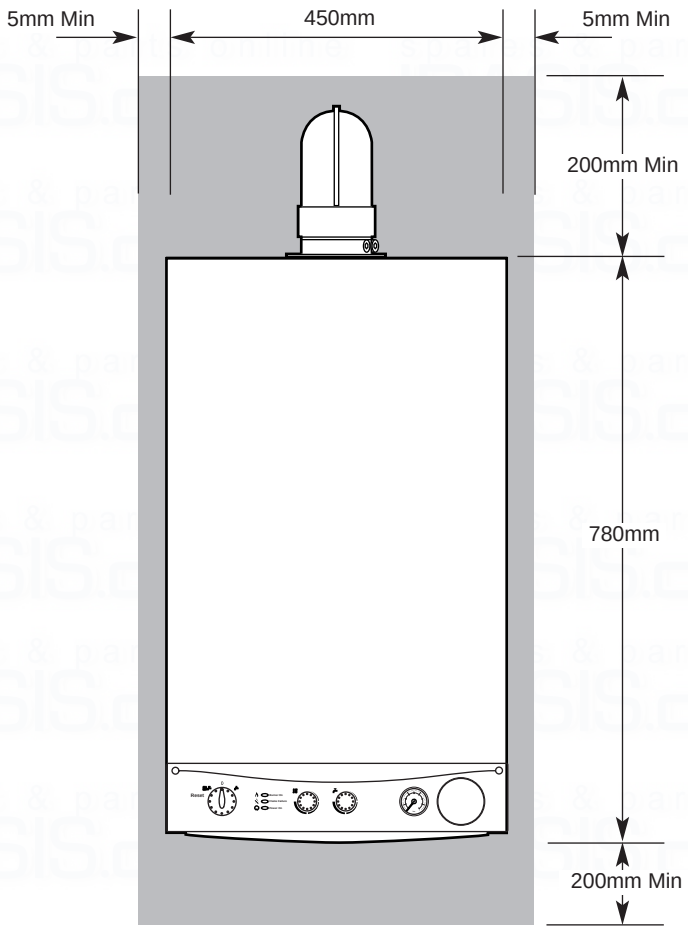

Fig. 12

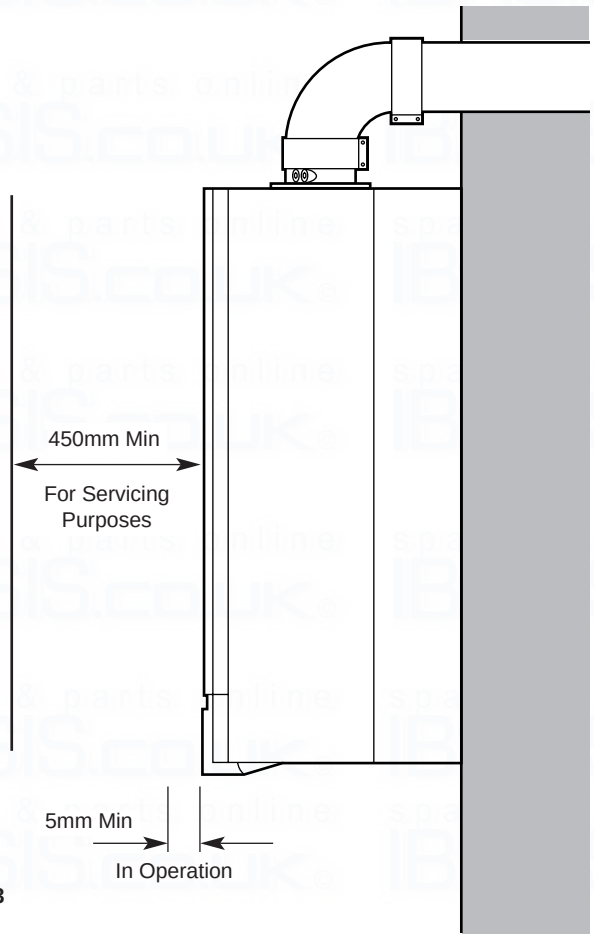

Fig. 13

7.0 Site Requirements

7.1 Information

1. The installation must be carried out by a CORGI Registered Installer or other competent person and be in accordance with the relevant requirements of the current **Gas Safety** (Installation and Use) **Regulations**, the **Building Regulations** (Scotland)(Consolidation), the **Local Building Regulations**, the current **I.E.E. Wiring Regulations** and the bye laws of the **Local Water Undertaking**. Where no specific instruction is given reference should be made to the relevant **BRITISH STANDARD CODES OF PRACTICE**. For Ireland install in accordance with IS 813 "**Installation of Gas Appliances**".

7.2 B.S. Codes of Practice

Standard	Scope
BS 6891	Gas Installation.
BS 5546	Installation of hot water supplies for domestic purposes.
BS 5449 Part 1	Forced circulation hot water systems.
BS 6798	Installation of gas fired hot water boilers.
BS 5440 Part 1	Flues.
BS 5440 Part 2	Ventilation.
BS 7074	Expansion vessels and ancillary equipment for sealed water systems.
BS 7593	Treatment of water in domestic hot water central heating systems.

WARNING - The addition of anything that may interfere with the normal operation of the appliance without express written permission could invalidate the appliance warranty and infringe the **Gas Safety** (Installation and Use) **Regulations**.

7.3 Clearances (Fig. 12 & 13)

1. A flat vertical area is required for the installation of the boiler.

2. These dimensions include the necessary clearances around the boiler for case removal, spanner access and air movement. Additional clearances may be required for the passage of pipes around local obstructions such as joists running parallel to the front face of the boiler.

7.4 Location

1. The boiler may be fitted to any suitable wall with the flue passing through an outside wall or roof and discharging to atmosphere in a position permitting satisfactory removal of combustion products and providing an adequate air supply. The boiler should be fitted within the building unless otherwise protected by a suitable enclosure i.e. garage or outhouse. (The boiler may be fitted inside a cupboard - see Section 7.5).
2. If the boiler is sited in an unheated enclosure then it is recommended that frost protection is incorporated in the control system.
3. If the boiler is fitted in a room containing a bath or shower reference must be made to the current **I.E.E. Wiring Regulations** and **Building Regulations**. If the boiler is to be fitted into a building of timber frame construction then reference must be made to the current edition of Institute of Gas Engineers Publication IGE/UP/7 (Gas Installations in Timber Framed Housing).

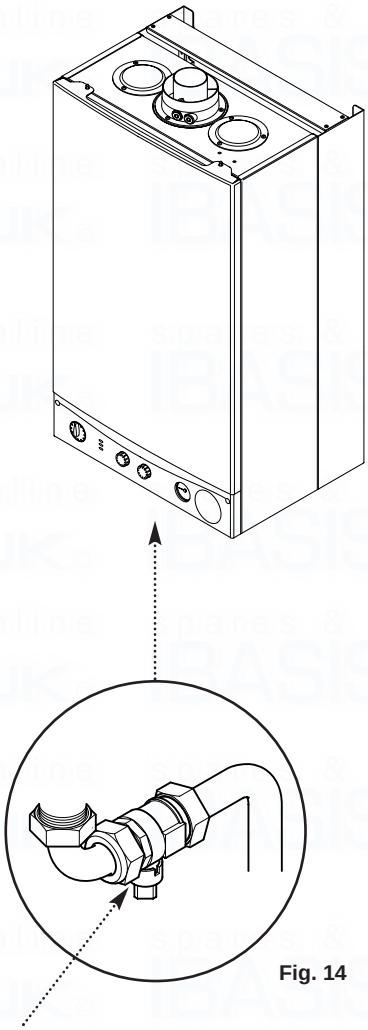

Fig. 14

7.5 Ventilation of Compartments

1. Where the appliance is installed in a cupboard or compartment, no air vents are required.

2. BS 5440: Part 2 refers to room sealed appliances installed in compartments. The appliance will run sufficiently cool without ventilation.

7.6 Gas Supply

1. The gas installation should be in accordance with BS6891.

2. The connection to the appliance is a 22mm copper tail located at the rear of the gas service cock (Fig. 14).

3. Ensure that the pipework from the meter to the appliance is of adequate size. Do not use pipes of a smaller diameter than the boiler gas connection (22mm).

7.7 Electrical Supply

1. External wiring must be correctly earthed, polarised and in accordance with current I.E.E. Wiring Regulations.

2. The mains supply is 230V ~ 50Hz fused at 3A maximum.

NOTE: The method of connection to the electricity supply must facilitate complete electrical isolation of the appliance.

Connection may be via a fused double-pole isolator with a contact separation of at least 3mm in all poles and servicing the boiler and system controls only.

7.8 Flue

1. **The flue terminal position must always be in accordance with the current edition of B.S. 5440 Part 1, and either Part J of the Building Regulations England and Wales or Part F of the Building Standards (Scotland) Regulations as appropriate.**

2. If the terminal discharges onto a pathway or passageway, check that combustion products will not cause a nuisance and that the terminal will not obstruct the passageway.

3. If a terminal is less than 2 metres above a balcony, above ground or above a flat roof to which people have access, then a suitable terminal guard must be provided.

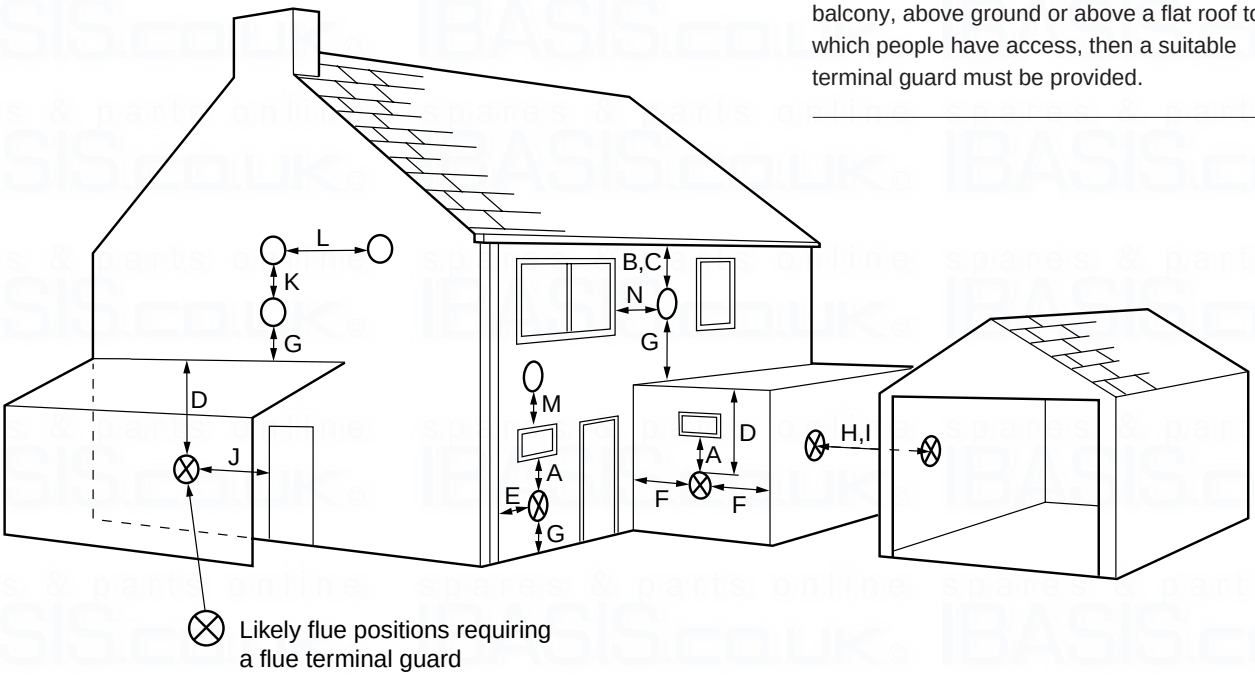

Fig. 16

	Terminal Position with Minimum Distance (Fig. 16)	(mm)
A	Directly below an openable window, air vent or any other ventilation opening.	300
B	Below gutters, drain/soil pipe.	150
C	Below eaves.	200
D	Below balcony/car port roof.	200
E	From vertical drain pipes and soil pipes.	150
F	From internal or external corners.	300
G	Above adjacent ground or balcony level.	300
H	From a surface or boundary facing the terminal.	600
I	Facing terminals.	1200
J	For opening (door/window) in car port into dwelling.	1200
K	Vertically from a terminal on the same wall.	1500
L	Horizontally from a terminal on the same wall.	300
M	Above an opening, air brick, opening window etc.	300
N	Horizontally to an opening, air brick, opening window etc.	300

NOTE: Scotland Only - The distance from a fanned draught appliance terminal installed at right angles to a boundary may not be less than 300mm in accordance with the diagram below.

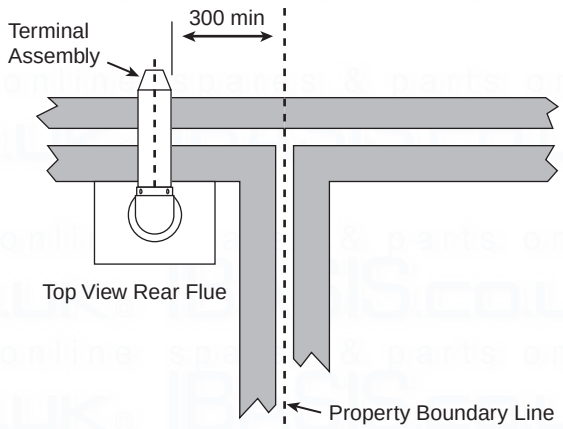

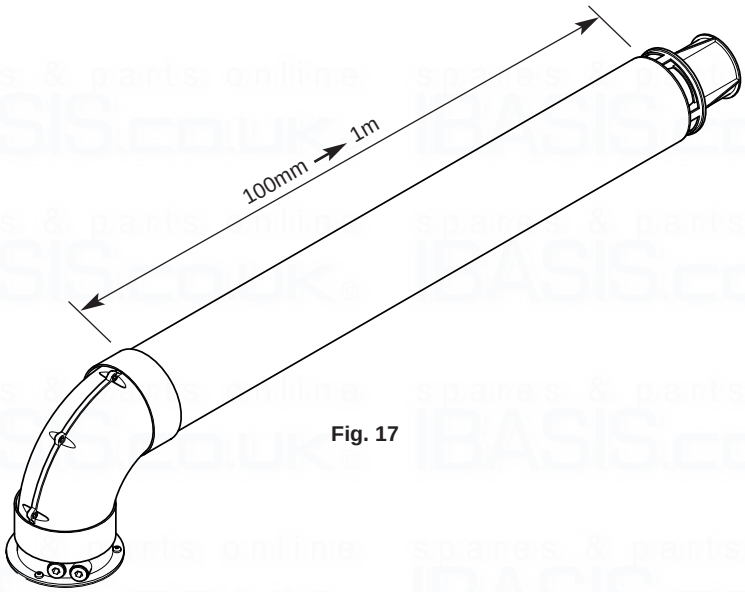

Fig. 17

7.9 Flue Dimensions

The standard horizontal flue kit allows for flue lengths between 100mm and 1metre from elbow to terminal (Fig. 17).

The maximum permissible flue length is: 5 metres.

7.10 Flue Terminal Trim

1. Once the flue is secure the trim can be fitted if required.

2. Remove the protective backing from the adhesive seal. Apply the seal to the rear of the trim flange (Fig. 18).

3. Locate the trim over the flue terminal and push it back to the wall to compress the seal (Fig. 19).

Fig. 18

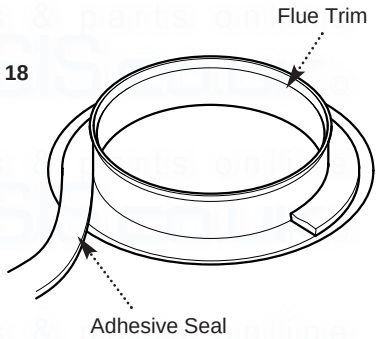

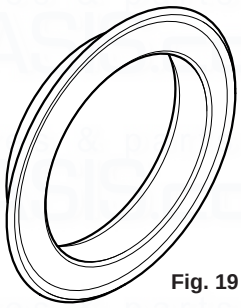

Fig. 19

7.11 Terminal Guard (Fig. 20)

1. When codes of practice dictate the use of terminal guards, they can be obtained from most Plumbers' and Builders' Merchants.

2. There must be a clearance of at least 50mm between any part of the terminal and the guard.

3. When ordering a terminal guard, quote the appliance name and model number.

4. The flue terminal guard should be positioned centrally over the terminal and fixed as illustrated.

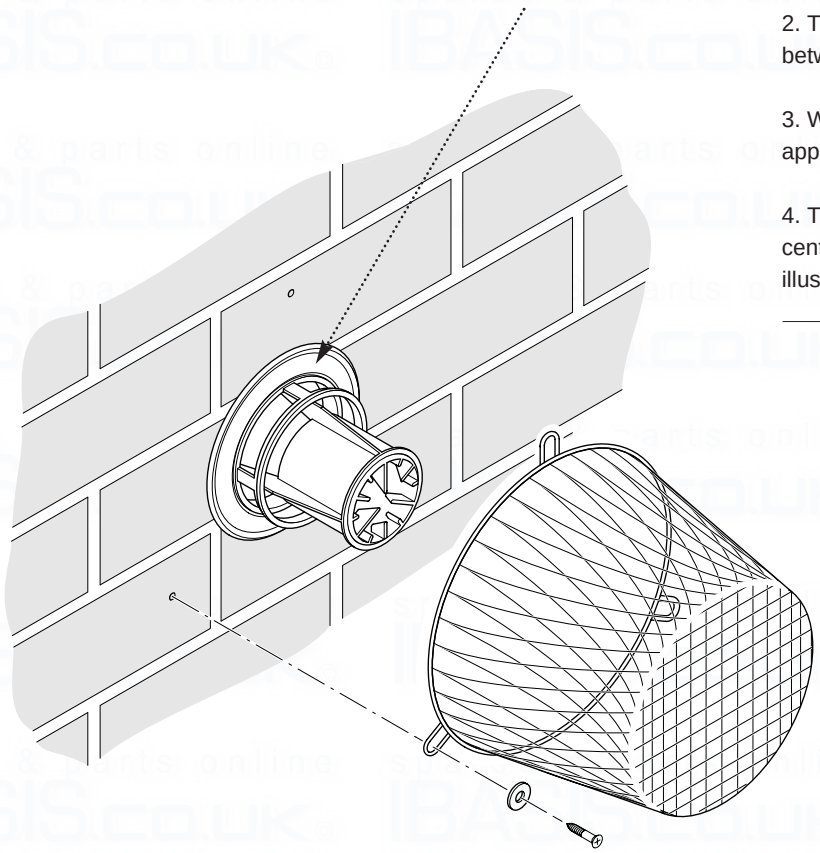

Fig. 20

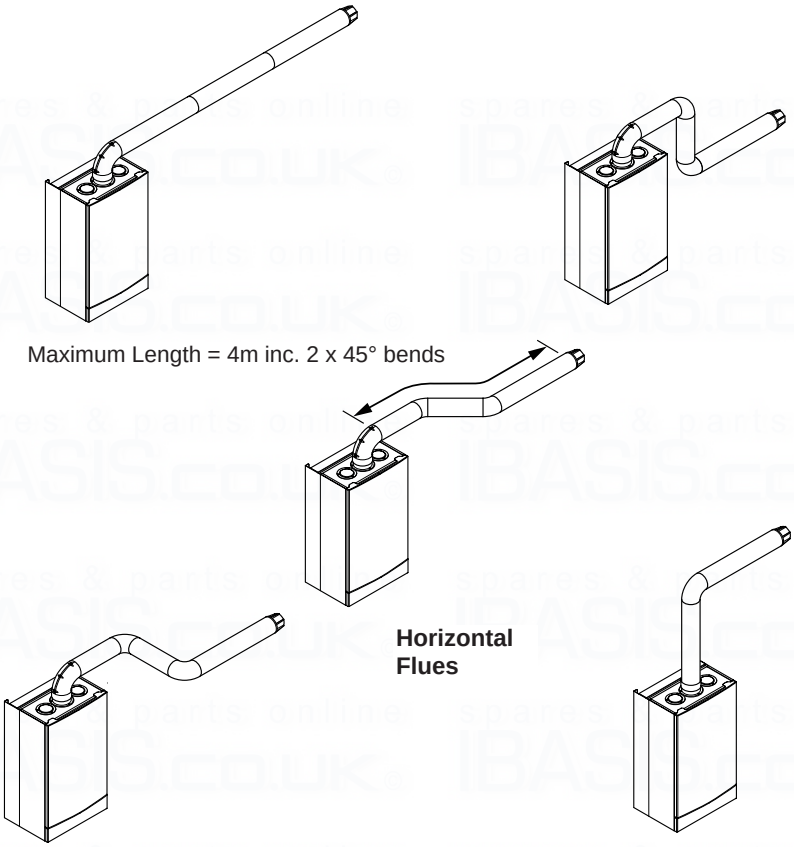

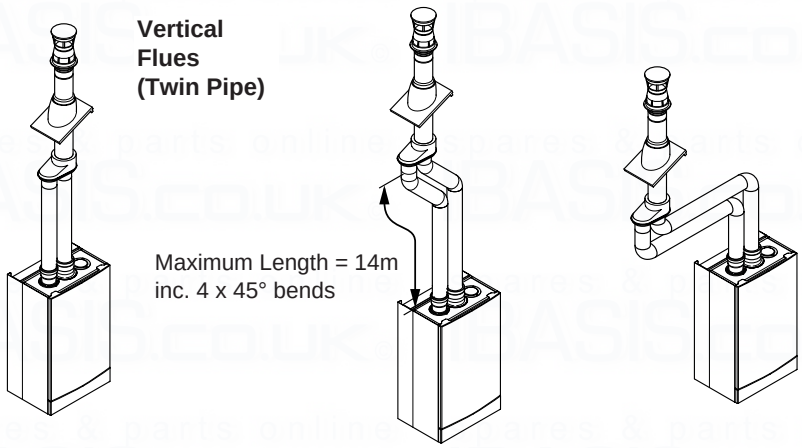

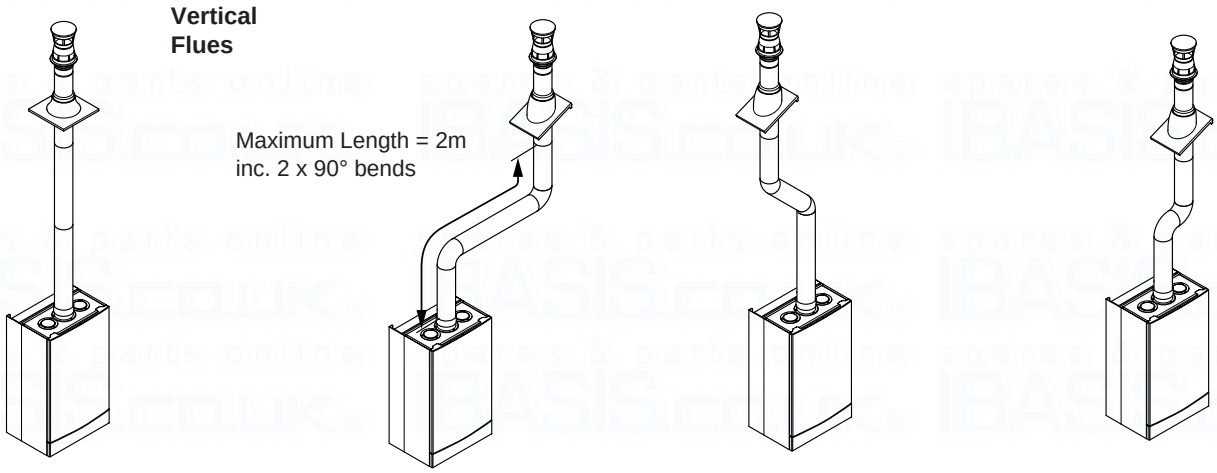

7.12 Flue Options

1. The Potterton Performa 24 can be fitted with flue systems as illustrated.

2. The standard flue is suitable only for horizontal applications.

3. Maximum permissible equivalent flue lengths are:-

Horizontal	5 metres
Vertical	4 metres
Vertical (Twin Pipe)	15 metres

4. Any additional “in line” bends in the flue system must be taken into consideration.
Their equivalent lengths are:-
Concentric Pipes:

45° bend	0.5 metres
90° bend	1.0 metres

Twin Flue Pipe

45° bend	0.25 metres
90° bend	0.50 metres

The elbow supplied with the standard horizontal flue is not included in any equivalent length calculations

5. The illustrations opposite show examples of maximum equivalent lengths.

6. Instructions for guidance and fitting are included in each kit, where appropriate.

spares & parts online IBASIS.CO.UK

Fixing Template

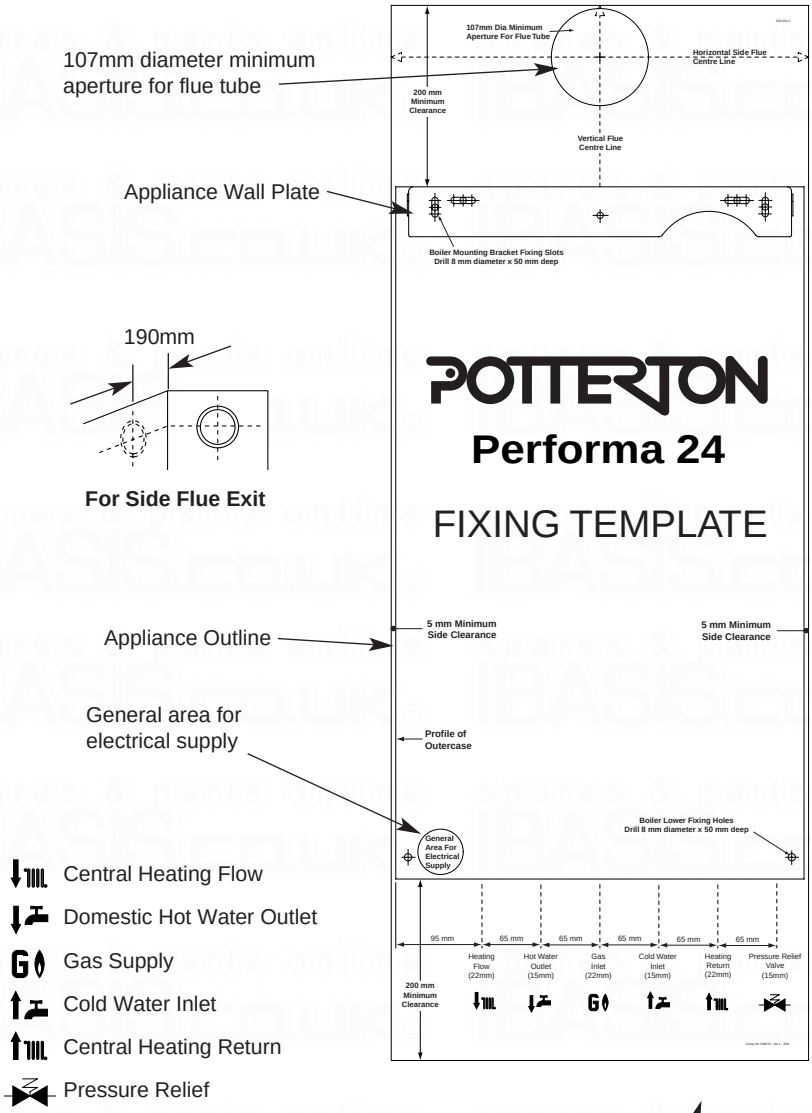

Fig. 21

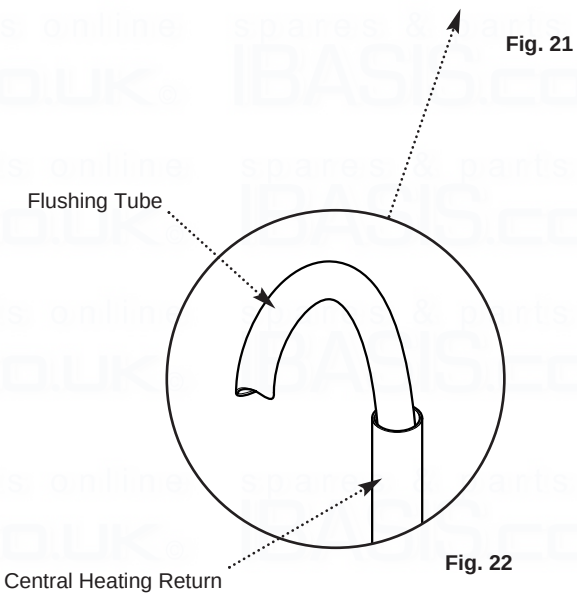

Fig. 22

8.0 Installation

8.1 Initial Preparation

The gas supply, gas type and pressure must be checked for suitability before connection (see Section 7.6).

1. After considering the site requirements (see Section 7.0) position the fixing template on the wall ensuring it is level both horizontally and vertically.

2. Mark the position of the two most suitable fixing slots for the wall plate and boiler lower fixing holes. It is preferable to use the horizontal fixing slots. For side flue exit, mark as shown.

3. Mark the position of the centre of the flue hole (rear exit). For side flue exit, mark as shown.

4. If required, mark the position of the gas and water pipes. Remove the template.

5. Cut the hole for the flue (minimum diameter 107mm).

6. Drill the wall as previously marked to accept the wall plugs supplied. Secure the wall plate using two of the fixing screws.

7. Using a spirit level ensure that the plate is level before finally tightening the screws.

8.2 Flushing

1. Connect a tube to the central heating flow or return pipe (Fig. 22).

2. Flush thoroughly (see System Details, Section 6.2).

8.3 Preparing The Boiler

1. Remove all packaging.

2. Stand the boiler on its base by using the rear lower edge as a pivot.

NOTE: A small amount of water may drain from the boiler in the upright position.

spares & parts online IBASIS.COUK

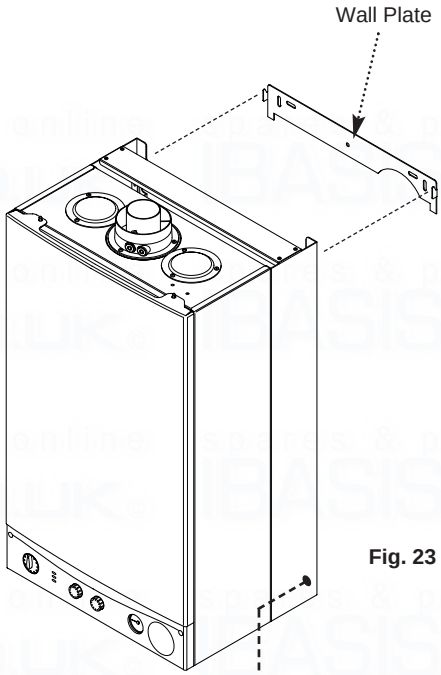

Fig. 23

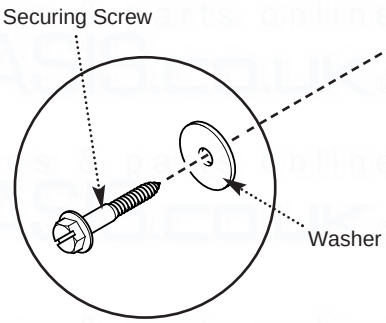

Fig. 24

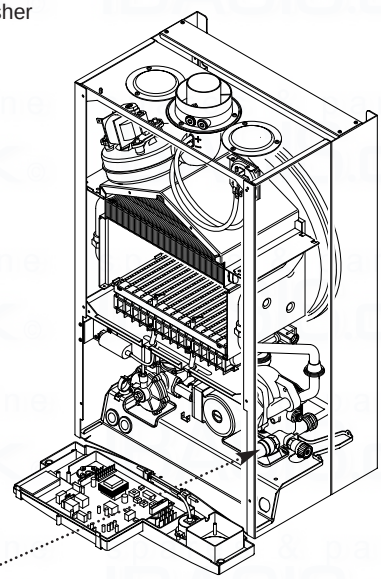

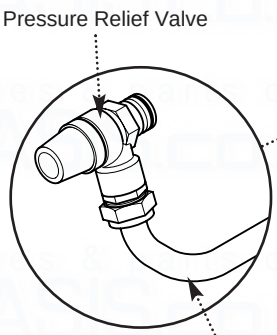

Fig. 25

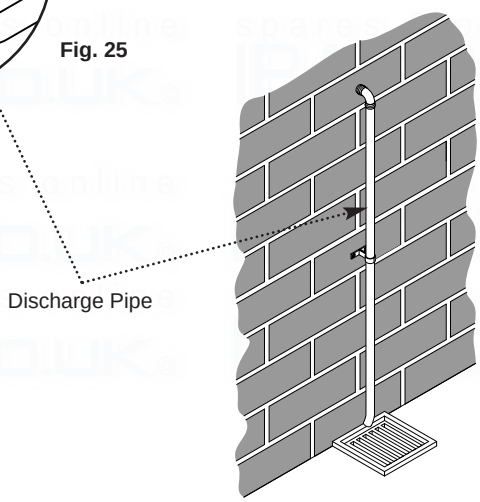

Fig. 26

8.4 Fitting The Boiler

1. Lift the boiler using the lower edges. Engage the slots at the top rear of the boiler on the wall plate hooks (Fig. 23).

2. Ensure that the boiler is level and sits against the wall.

3. Take the two steel washers and remaining screws. Using the previously drilled and plugged holes, secure the bottom of the boiler to the wall (Fig. 24).

4. Remove the elbows, valves and sealing washers from the packaging. The 3/4 in valve with internal filter must be fitted to the central heating return. The filter is visible through the branch connection of the valve.

5. Using the sealing washers provided connect the valves to the heating flow and return, and the cold water inlet.

6. Connect the elbows to the gas service cock and hot water outlet pipe, and then connect the elbows to the boiler. Connect the elbows with flared ends to the valves.

7. Ensure that the sealing washers are used on all connections. The rubber washers must be used on the gas connections.

8. The gas and water supplies, central heating flow and return and domestic hot water flow can now be connected.

8.5 Fitting the Pressure Relief Discharge Pipe (Fig. 25)

1. Remove the discharge pipe from the kit.

2. Determine the routing of the discharge pipe in the vicinity of the boiler. Make up as much of the pipework as is practical, including the discharge pipe supplied.

3. The pipework must be at least 15mm diameter and run continuously downwards to a discharge point outside the building (Fig. 26). See section 6.7 for further details.

4. Using one of the sealing washers, connect the discharge pipe to the adaptor and tighten the nut.

5. Complete the discharge pipework and route it to the outside discharge point.

IMPORTANT: Make all soldered joints before connecting to the pressure relief valve.

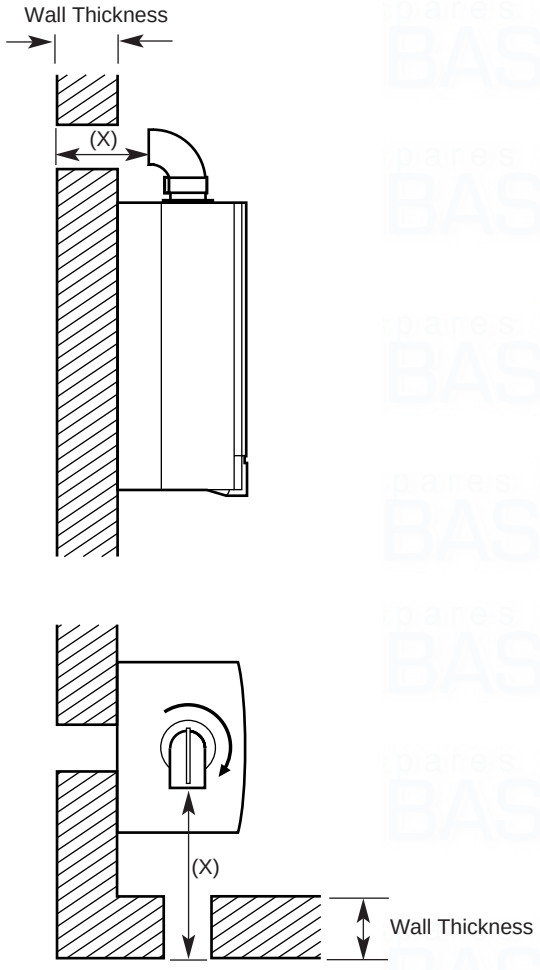

Fig. 27

8.6 Fitting The Flue

HORIZONTAL FLUE

1. The standard flue is suitable for lengths 100mm minimum to 1m maximum (measured from the edge of the flue elbow outlet).

Rear Flue: maximum wall thickness - 900mm
Side Flue: maximum wall thickness - 870mm

2. Locate the flue elbow on the adaptor at the top of the boiler. Set the elbow to the required orientation (rear, right or left).

3. Measure the distance from the outside wall face to the elbow (Fig. 27). This dimension will be known as 'X'.

4. Taking the air duct, mark dimension 'X' as shown (Fig. 28). Measure the length of waste material, and transfer the dimension to the flue duct (Fig. 28).

IMPORTANT: Check all measurements before cutting the ducts.

5. Remove the waste from both ducts. Ensure that the cut ends are square and free from burrs.

6. Remove the flue elbow from the adaptor.

7. Insert the flue duct into the air duct and pass them through the hole in the wall.

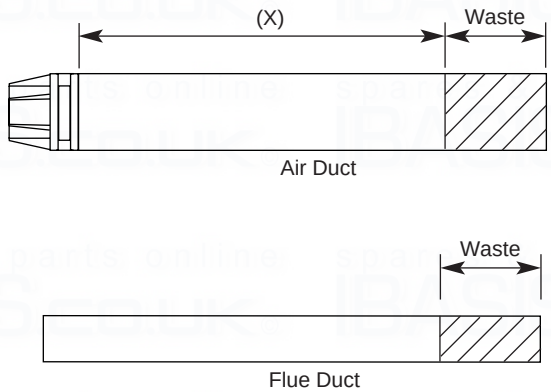

Fig. 28

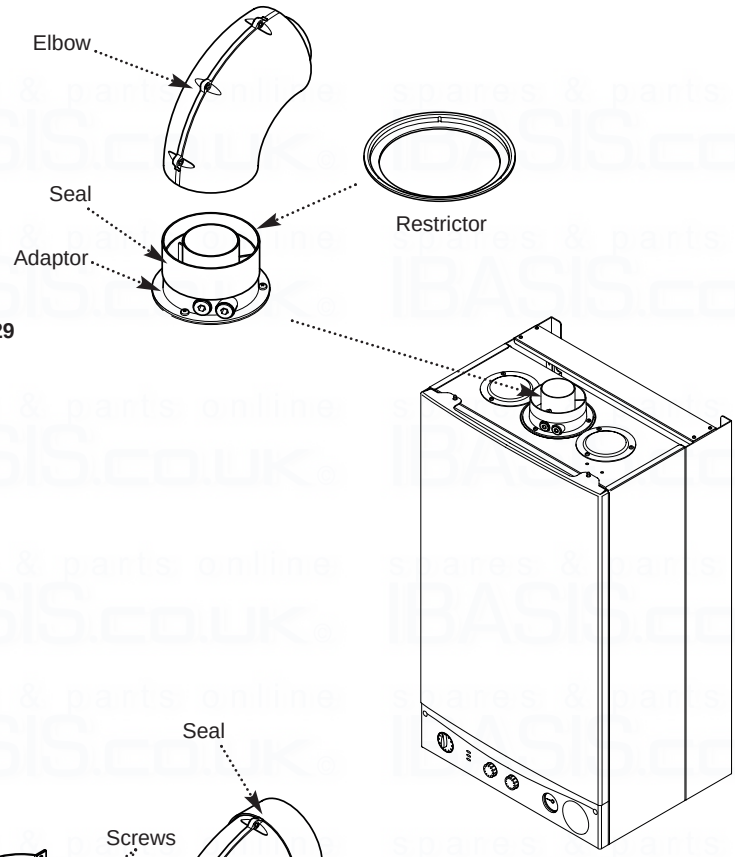

Fig. 29

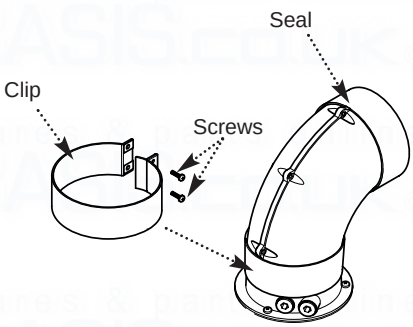

Fig. 30

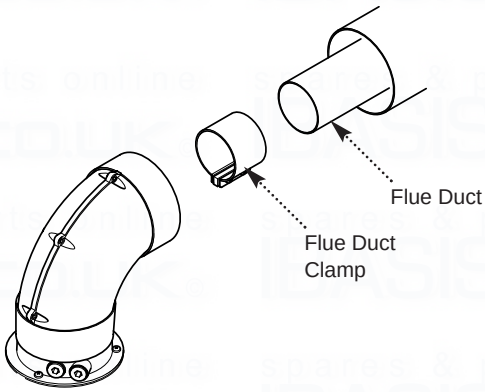

Fig. 31

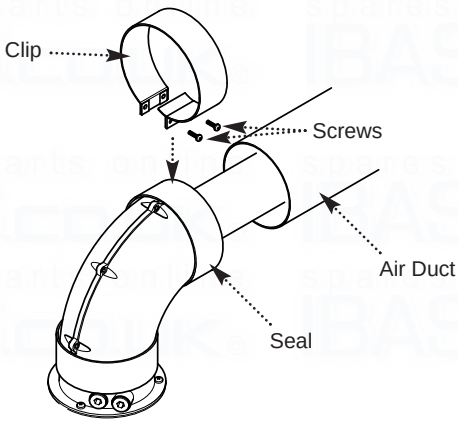

Fig. 32

8.6 Fitting the Flue (Cont)

IMPORTANT: If the flue length is greater than 1.5m the restrictor **MUST** be removed from the adaptor (Fig. 29).

8. Take one of the rubber seals and position it on the boiler flue adaptor. Engage the flue elbow on the adaptor and pull the sleeve up so that it equally covers the joint (Fig. 29).

9. Remove the screws from one of the clips provided. Prise the clip apart and fit it over the seal. Set the elbow to the required angle (Fig. 30).

10. Refit the screws to the clip and tighten them to secure the elbow. Take the second rubber seal and position it on the flue elbow.

11. Locate the flue duct clamp on the flue outlet elbow. Draw the flue duct out of the air duct, engage it in the clamp and tighten the screws (Fig. 31).

12. Draw the air duct out of the wall and align it with the elbow. Position the seal so that it equally covers the joint (Fig. 32).

13. Remove the screws from the second clip provided. Prise the clip apart and fit it over the seal. Refit the screws to the clip and tighten them (Fig. 32).

14. Where possible position the clips so that the screws are not visible.

15. Make good between the wall and air duct outside the building.

16. Fit the circular flue trim outside if required, and if necessary fit a terminal guard (see Section 7.10 & 7.11).

8.7 Extensions & Additional Elbows

1. The method of connecting any flue extensions or additional elbows is the same as that for connecting the standard flue and 90° elbow as described above.

2. If, for example, when a flue extension is connected to a 90° elbow the flue duct will project from the air duct at the unconnected end by the same ammount as the flue duct spigot does from the elbow . Further elbows or extensions can then be added to this.

3. Similarly, a concentric flue can be connected to the boiler adaptor in the same manner as it does to the elbow to provide a vertical flue.

4. The additional 90° elbow available is identical to the elbow supplied with the standard flue. 45° elbows are of the same principle.

5. Extensions can be cut according to the requirements of the installation.

Fig. 33

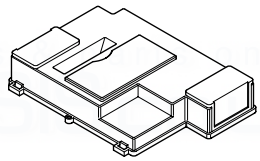

Control Box Cover

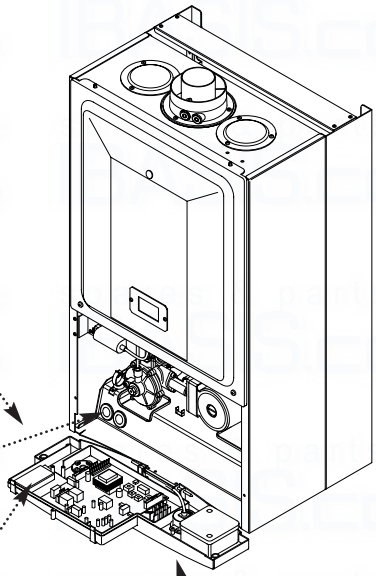

Fig. 35

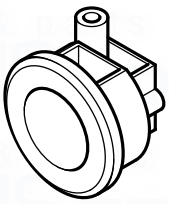

Fig. 34

Cable Clamp

Facia Panel

Fuse

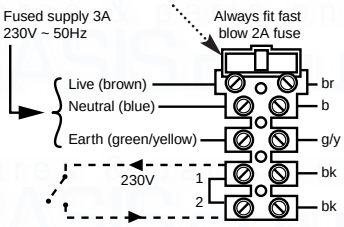

Terminal Block

Fig. 36

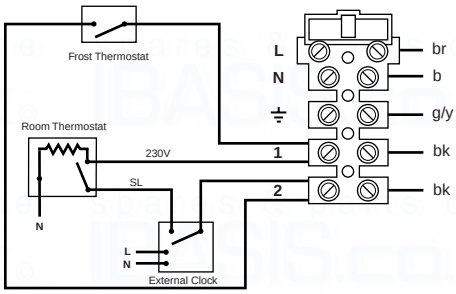

Fig. 37

Functional Flow Diagram

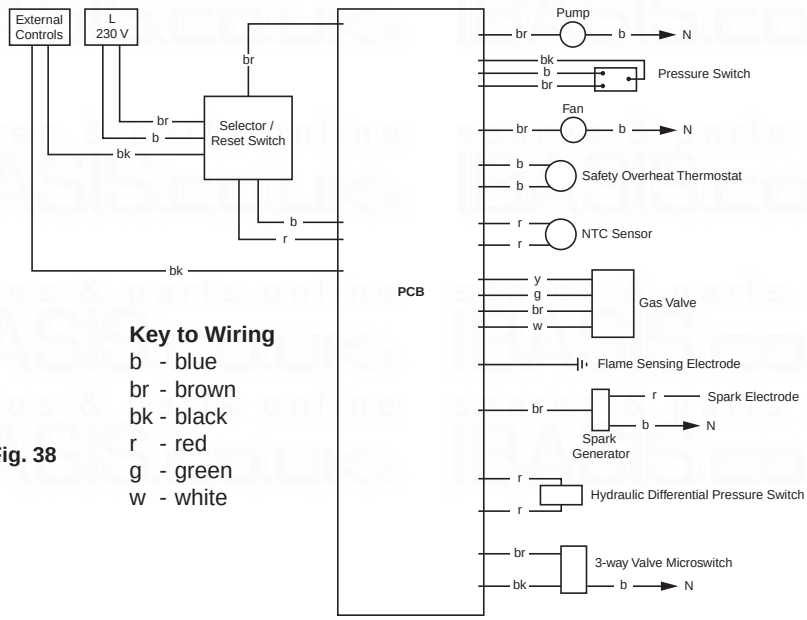

Key to Wiring

b - blue
br - brown
bk - black
r - red
g - green
w - white

Fig. 38

8.8 Making The Electrical Connections

To connect the mains input cable proceed as follows:-

1. Slacken the facia panel securing screws and lift the outercase panel so that its securing tabs are clear of the facia. Remove the panel.

2. Undo the screws securing the facia panel and hinge it down (Fig. 35).

3. Remove the control box cover securing screws. Disengage the barbs on the control box from the cover. Remove the cover (Fig. 33).

4. Slacken the cable clamp on the LH side of the boiler chassis (Fig. 34). Insert the cable through the clamp and route it to the terminal block.

5. Slacken the screws in the terminal block, connect the input cable, and tighten the screws.

6. If an external control is to be connected it can be done at this point. Run the input cable from the external control through the second cable clamp on the boiler chassis. Refer to the instructions supplied with the control.

7. To connect external control(s) remove the link between terminals 1 & 2. The 230V supply at terminal 1 can be connected to the external control as shown. The switched output from the external control must be connected to terminal 2. (Figs. 36 & 37).

NOTE: If the room thermostat being used incorporates an anticipator it MUST be wired as shown in Fig. 37.

IMPORTANT: The external control **MUST** be suitable for 230V switching.

8. Ensure that both mains input and, where fitted, external control input cables have sufficient slack to allow the control box to drop down. Tighten the cable clamp(s) on the boiler chassis.

9. If an optional integral timer is to be used it should be fitted at this point. Refer to the instructions supplied with the timer.

8.9 Preliminary Electrical Checks

1. Prior to commissioning the boiler preliminary electrical system checks should be carried out.

2. These should be performed using a suitable meter, and include checks for Ground Continuity, Resistance to Ground, Short Circuit and Polarity.

9.0 Commissioning the Boiler

9.1 Commissioning the Boiler

1. Reference should be made to BS 5449 Section 5 when commissioning the boiler.

2. Open the mains water supply to the boiler.

3. Open all hot water taps to purge the DHW system.

4. Ensure that the filling loop is connected and open, then open the heating flow and return valves on the boiler.

5. Open the screw on the automatic air vent (Fig. 40).

6. The system must be flushed in accordance with BS 7593 (see Section 6.2) and the flushing agent manufacturers instructions.

7. Pressurise the system to at least 0.5 bar then close and disconnect the filling loop (Fig. 39).

8. Turn the gas supply on and purge the system according to BS 6891.

9. Test for gas soundness.

10. If at any time during commissioning it is required to terminate a particular cycle, e.g. the pump overrun period, turn the selector to the OFF position and then back to either (⊼) or (⊼) (Fig. 41).

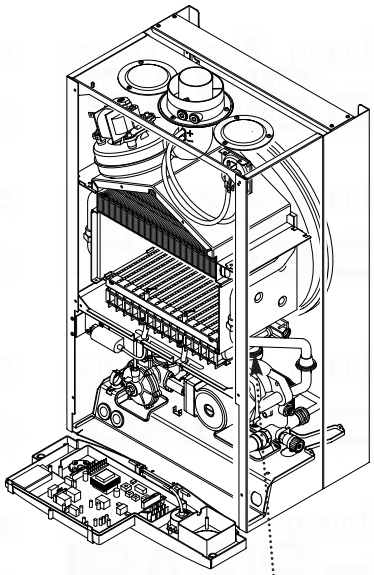

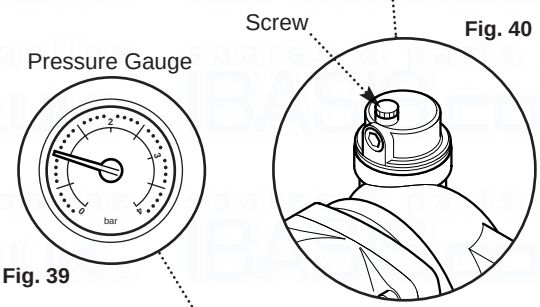

Fig. 40

Fig. 39

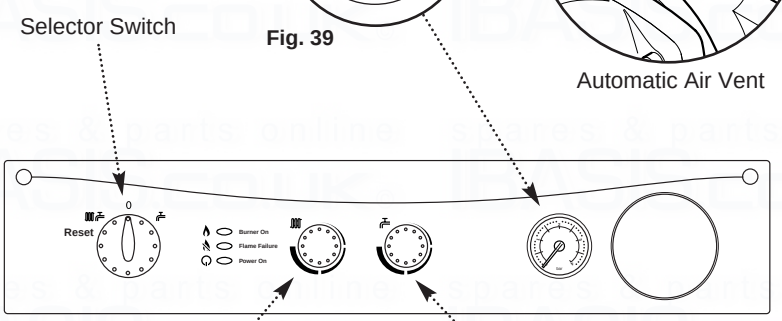

Fig. 41

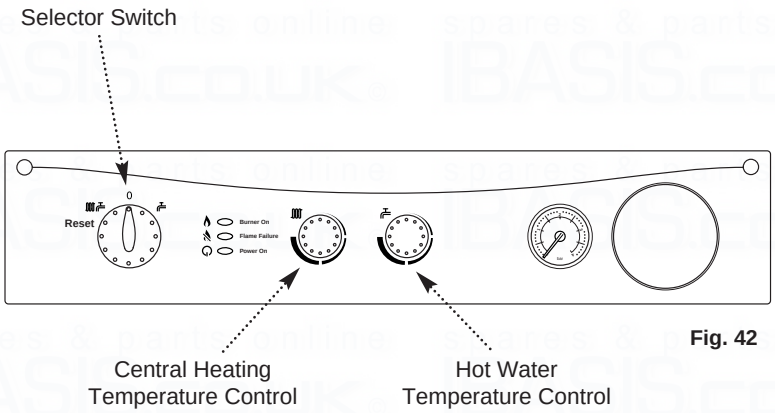

Fig. 42

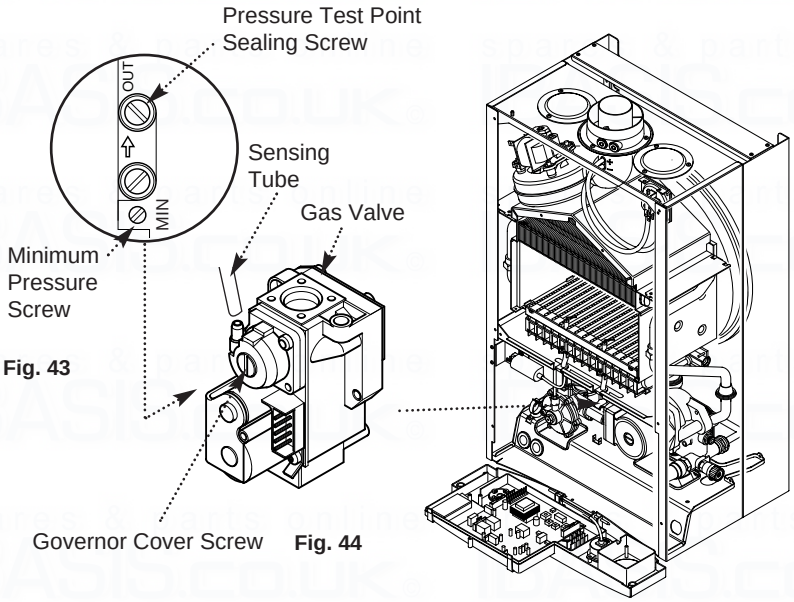

Fig. 43

Fig. 44

9.2 Checking the Burner Pressure

1. Turn on the gas and electrical supplies to the boiler and ensure that all external controls are calling for heat.

2. Set the hot water and central heating temperature controls to maximum and the selector switch to the OFF position (Fig. 42).

3. Slacken the pressure test point sealing screw on the gas valve and connect a pressure gauge (Fig. 43).

4. Disconnect the sensing tube from the gas valve.

5. Turn the selector switch fully anticlockwise against the spring pressure to the reset position and hold for 2 seconds to reset the boiler.

6. Turn the selector switch to the Cental Heating and Domestic Hot Water position ( ). The power ON light ( ) will illuminate (Fig. 42).

7. Turn on a hot water tap to give a flow rate of at least 10 l/min.

8. The pressure should be as quoted in Section 4.0 Technical Data. If not, check that the gas supply pressure is correct (Natural Gas 20mbar, Butane 30mbar and Propane 37mbar).

9. The burner pressure can be adjusted if required.

10. Remove the governor cover screw (Fig. 44) and adjust the pressure regulator screw until the maximum pressure is achieved.

11. Turn the boiler selector switch to the Off position and remove the plug from the NTC Temperature Sensor.

12. Turn the boiler selector switch to the Central Heating and Domestic Hot Water position ( ) and reconnect the plug to the NTC. Check and adjust the minimum pressure screw. This must be performed within 25 seconds after which the boiler resumes normal operation.

13. Disconnect the pressure gauge, tighten the pressure test screw and replace the sensing tube on the gas valve.

14. Replace the governor cover screw and set the selector switch to the position required.

10.0 Completion

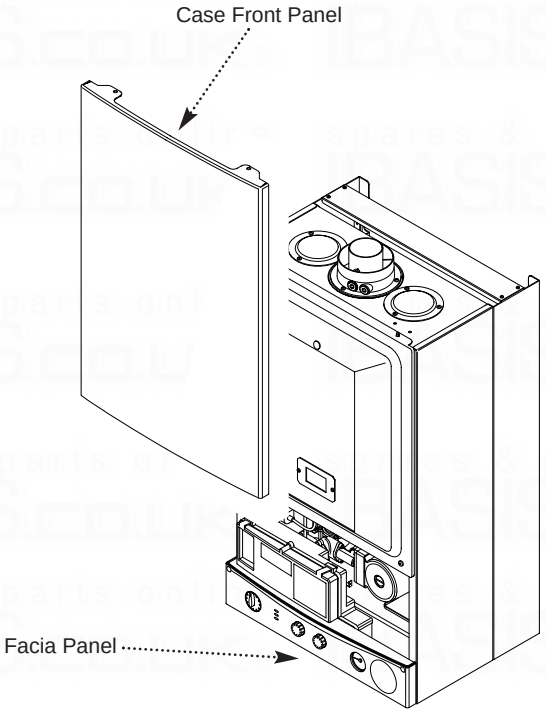

Fig. 45

10.1 Completion

1. Hinge the facia panel upwards and engage the securing screws. Refit the case front panel and tighten the screws (Fig. 45).

2. Instruct the user in the operation of the boiler and system, explaining the operational sequence.

3. Carefully read and complete all sections of the “Benchmark” Installation, Commissioning and Service Record Log Book that are relevant to the appliance and installation. The details of the Log Book will be required in the event of any warranty work. The Log Book must be handed to the user for safe keeping and each subsequent regular service visit recorded.

4. Hand over the Users Operating, Installation and Servicing Instructions and the Log Book, giving advice on the necessity of regular servicing.

11.0 Servicing the Boiler

11 .1 Annual Servicing

1. For reasons of safety and economy, it is recommended that the boiler is serviced annually. Servicing must be performed by a competent person.

2. After servicing, complete the relevant section of the “Benchmark” Installation, Commissioning and Service Record Log Book. This should be in the possession of the user.

3. Ensure that the boiler is cool.

4. Ensure that both the gas and electrical supplies to the boiler are isolated.

5. Slacken the screws securing the facia panel. Lift the outercase panel so that its securing tabs are clear of the facia. Remove the panel (Fig. 47).

6. Remove the screws securing the inner door panel. Lift the panel slightly to disengage it from the studs on top of the case (Fig. 48).

7. Note the positions of the two sensing tubes on the outlet elbow and three wires on the fan motor and remove them (Fig. 49).

8. Slacken the screws on the outlet sealing collar. Ease the collar upwards as far as possible (Fig. 50).

9. Remove the four screws securing the combustion box door and remove the door (Fig. 48).

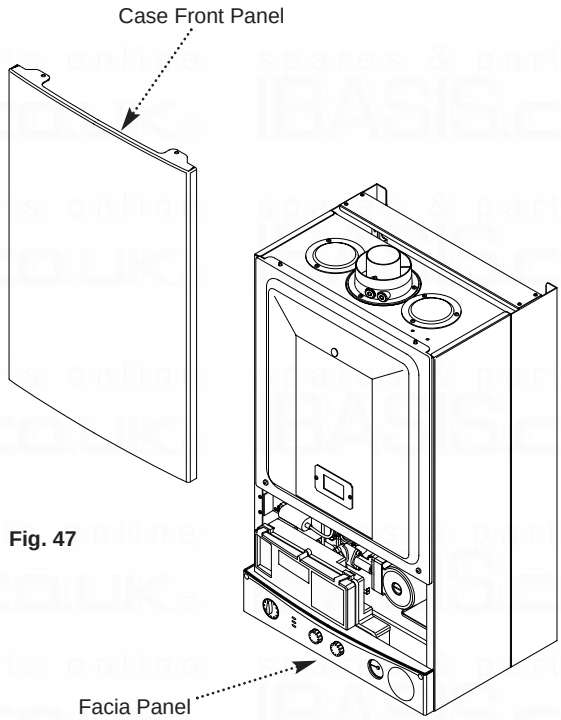

Fig. 47

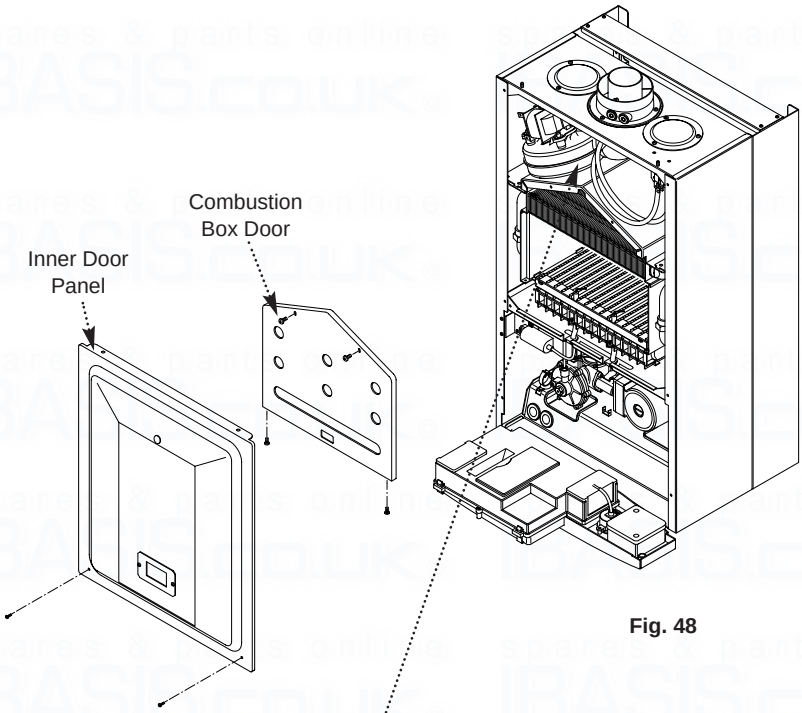

Fig. 48

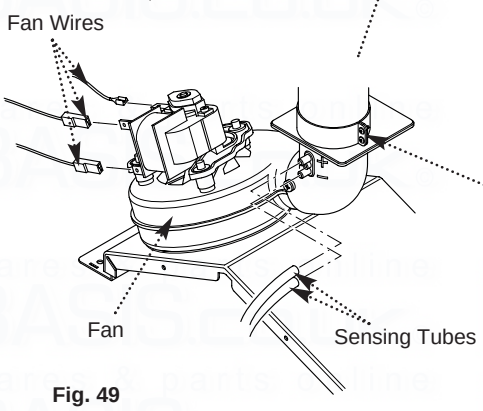

Fig. 49

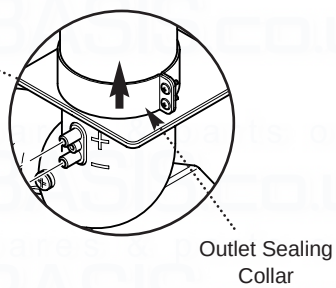

Fig. 50

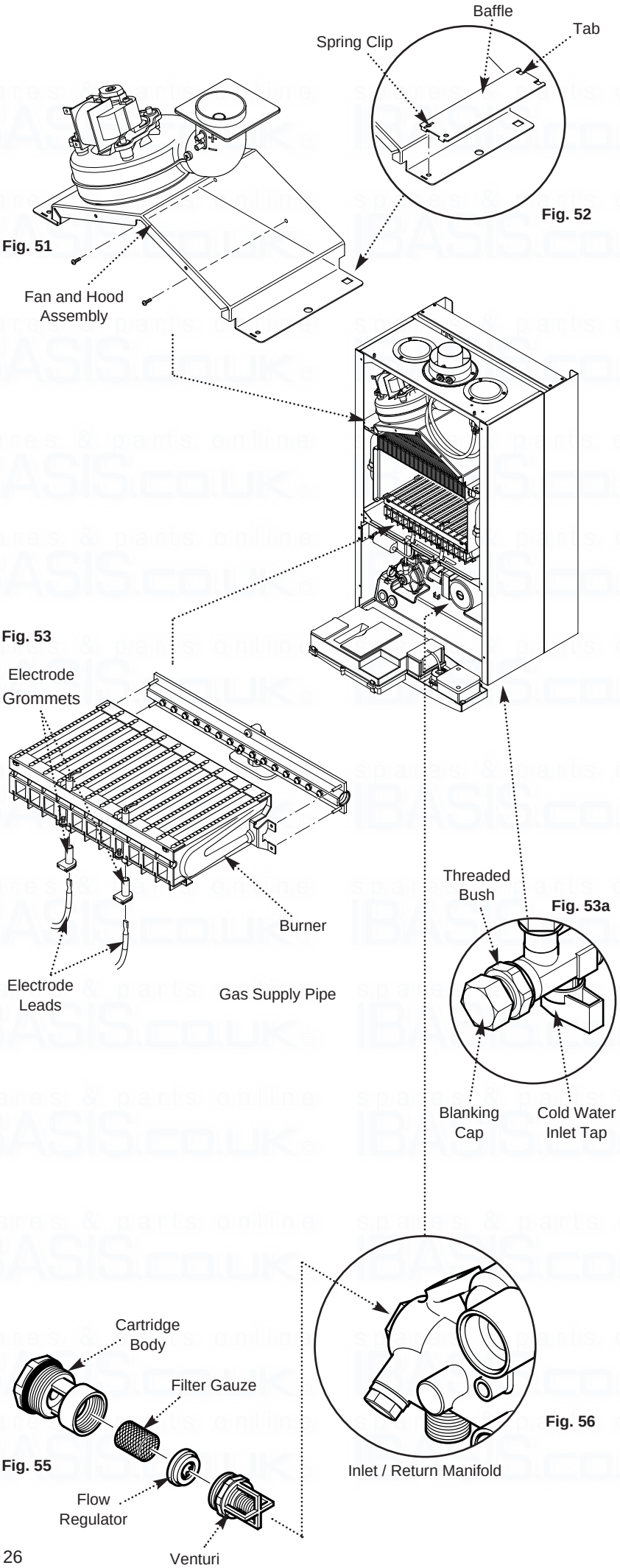

11.0 Servicing the Boiler

11.1 Annual Servicing (Cont)

10. Remove the spring clips retaining the air box side baffle plates. Disengage the tabs on the baffles from the slots in the fan hood (Fig. 52).

11. Undo the screws securing the fan hood assembly to the appliance back panel, and draw the fan and hood assembly forwards (Fig. 51).

12. Draw the burner out of the combustion box, pulling the electrode grommets from the slots in the combustion box lower panel (Fig. 53).

13. Disconnect the electrode leads and grommets from the electrodes. Completely remove the burner (Fig. 53).

14. Brush any deposits from the injectors. Do not use a pin or wire to clean them.

15. Brush the burner blades and venturis and clean the combustion box.

16. Ensure that the heat exchanger fins are clear of any obstruction.

D.H.W. Filters

17. If the flow of domestic hot water is diminished, it may be necessary to clean the filters.

18. Initially check the cold water inlet tap filter.

19. Turn the tap off. Undo the blanking cap and remove the threaded bush (Fig. 53a).

20. Extract the filter and rinse thoroughly in clean water. Reassemble and check the flow. If required clean the manifold filter as described below.

21. Undo the filter cartridge from the inlet/return manifold (Fig. 56).

22. Dismantle the cartridge and carefully remove the flow regulator and filter gauze. Rinse them thoroughly in clean water and reassemble in reverse order (Fig. 55).

23. Check that the pressure vessel charge is 0.5bar, reassemble in reverse order of dismantling.

24. Turn the selector switch fully anticlockwise against the spring pressure to position R and hold for 2 seconds to reset the boiler before recommissioning.

25. Complete the relevant section of the “Benchmark” Installation, Commissioning and Service Record Log Book and hand it back to the user.

12.0 Changing Components

IMPORTANT: When changing components ensure that both the gas and electrical supplies to the boiler are isolated before any work is started.

See Section 11.1 “Annual Servicing” for removal of case panel, door etc.

12.1 Pressure Switch

1. Note the positions of the two sensing tubes and three wires and remove them (Fig. 57).

2. Remove the two screws holding the pressure switch to the combustion box top panel.

3. Fit the new pressure switch and reassemble all components in reverse order of dismantling.

12.2 Fan

1. Note the positions of the two sensing tubes on the outlet elbow and three wires on the fan motor and remove them (Fig. 58).

2. Slacken the screws on the outlet sealing collar. Ease the collar upwards as far as possible (Fig. 59).

3. Remove the four screws securing the combustion box door and remove the door.

4. Remove the spring clips retaining the air box side baffle plates. Disengage the tabs on the baffles from the slots in the fan hood (Fig. 61).

5. Undo the screws securing the fan hood to the appliance back panel, and draw the fan and hood assembly forwards (Fig. 60).

6. Remove the screws and spring washers securing the fan to the hood. Transfer the flue outlet elbow to the new fan (Fig. 60).

7. Fit the new fan to the hood using the screws and spring washers previously removed.

8. Reassemble in reverse order of dismantling.

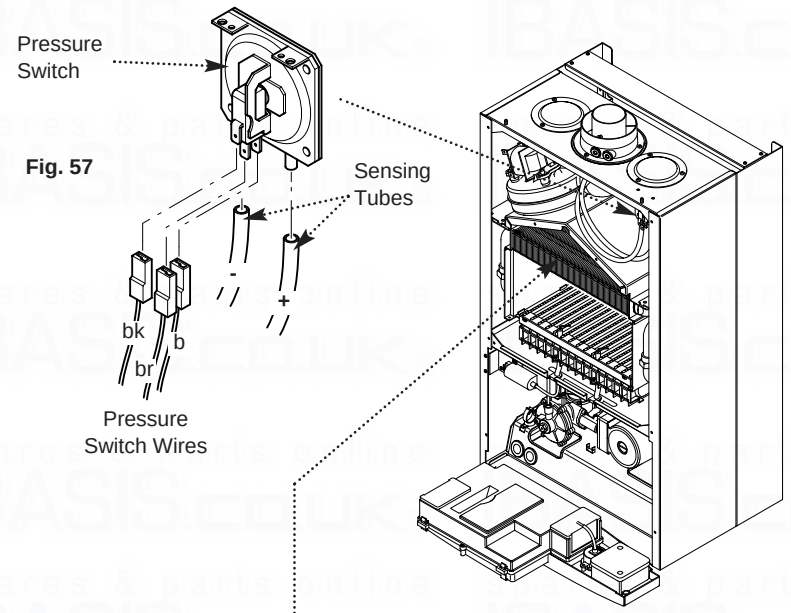

Fig. 57

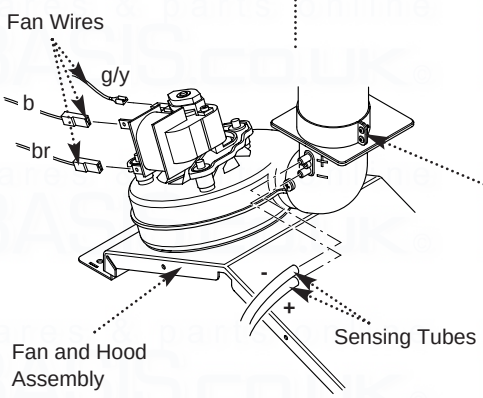

Fig. 58

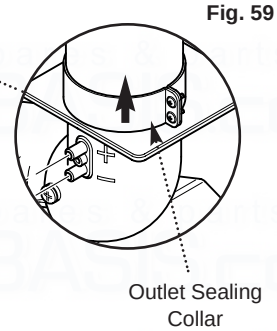

Fig. 59

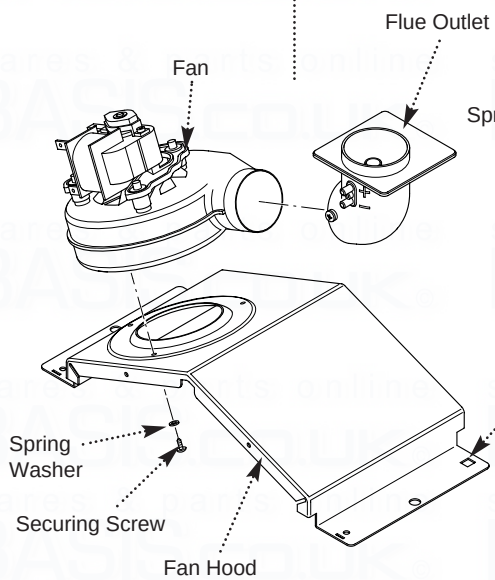

Fig. 60

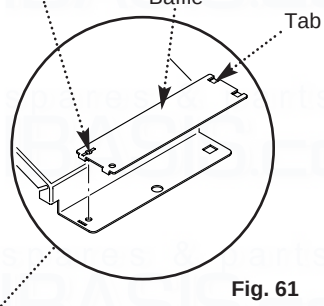

Fig. 61

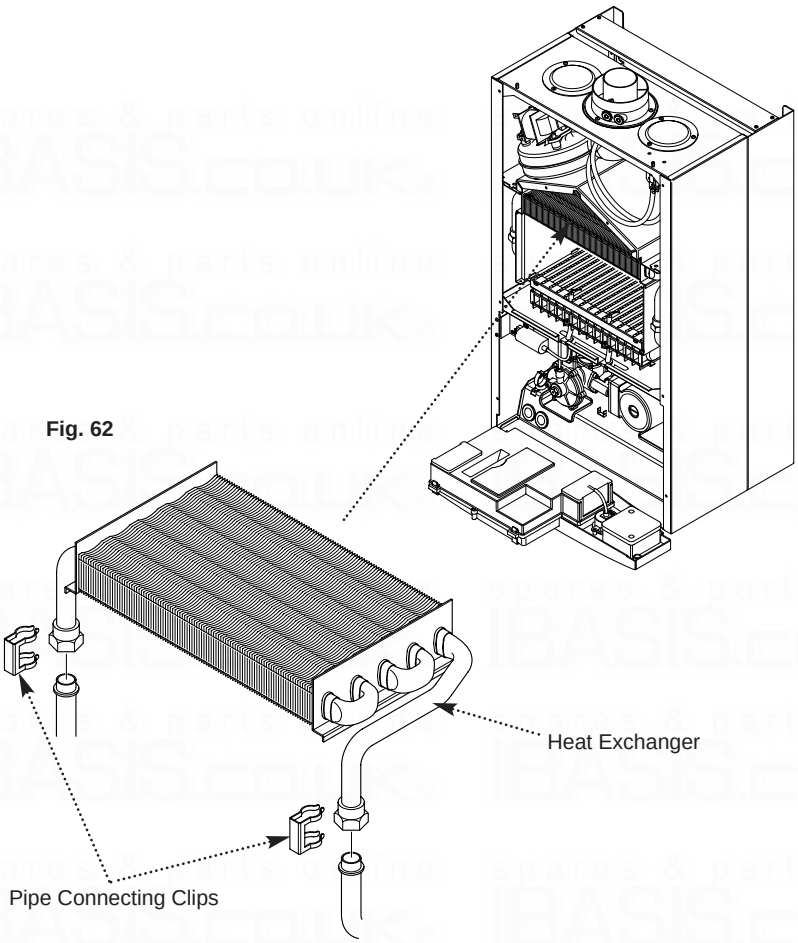

Fig. 62

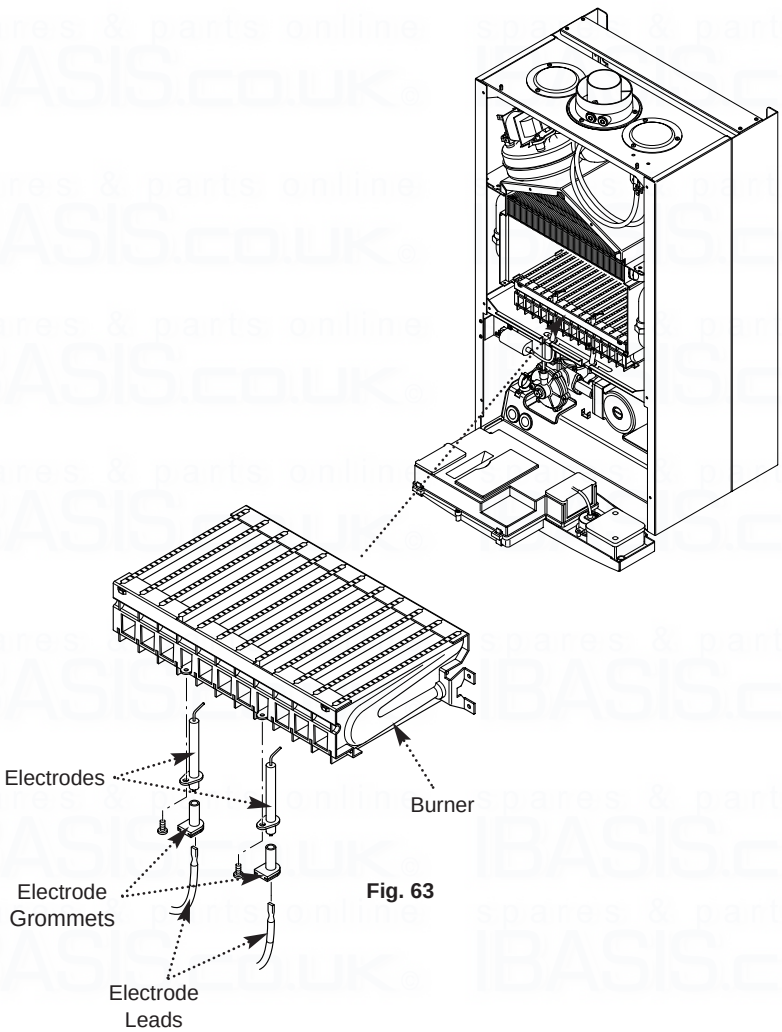

Fig. 63

12.3 Heat Exchanger (Fig. 62)

1. Note the positions of the two sensing tubes on the outlet elbow and three wires on the fan motor and remove them (Figs. 58 to 61).

2. Slacken the screws on the outlet sealing collar. Ease the collar upwards as far as possible.

3. Remove the four screws securing the combustion box door and remove the door.

4. Remove the spring clips retaining the air box side baffle plates. Disengage the tabs on the baffles from the slots in the fan hood.

5. Undo the screws securing the fan hood to the appliance back panel, and draw the fan and hood assembly forwards.

6. Drain the primary circuit. Prise the two pipe connecting clips off the joints in the flow and return pipes.

7. Lift the heat exchanger to disconnect the flow and return pipe joints. Withdraw it from the appliance, taking care not to damage the rear insulation piece.

8. Fit the new heat exchanger, ensuring that the tabs on the side insulation carriers engage in the slots in the heat exchanger side plates.

9. Reassemble in reverse order of dismantling, and repressurise the system.

12.4 Burner (Fig. 63)

1. Remove the four screws securing the combustion box door and remove the door.

2. Draw the burner out of the combustion box, pulling the electrode grommets from the slots in the combustion box lower panel.

3. Disconnect the electrode leads and grommets from the electrodes. Completely remove the burner.

4. Undo the screws securing the electrodes to the burner. Examine the condition of the electrodes, replacing if necessary. Fit the electrodes to the new burner.

5. Engage the burner location brackets over the studs on the injector manifold and reassemble in reverse order.

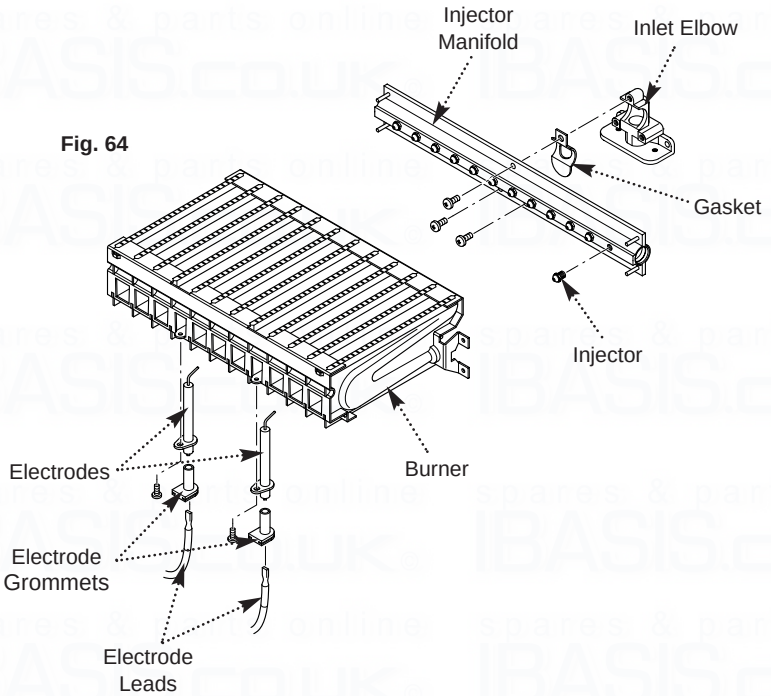

Fig. 64

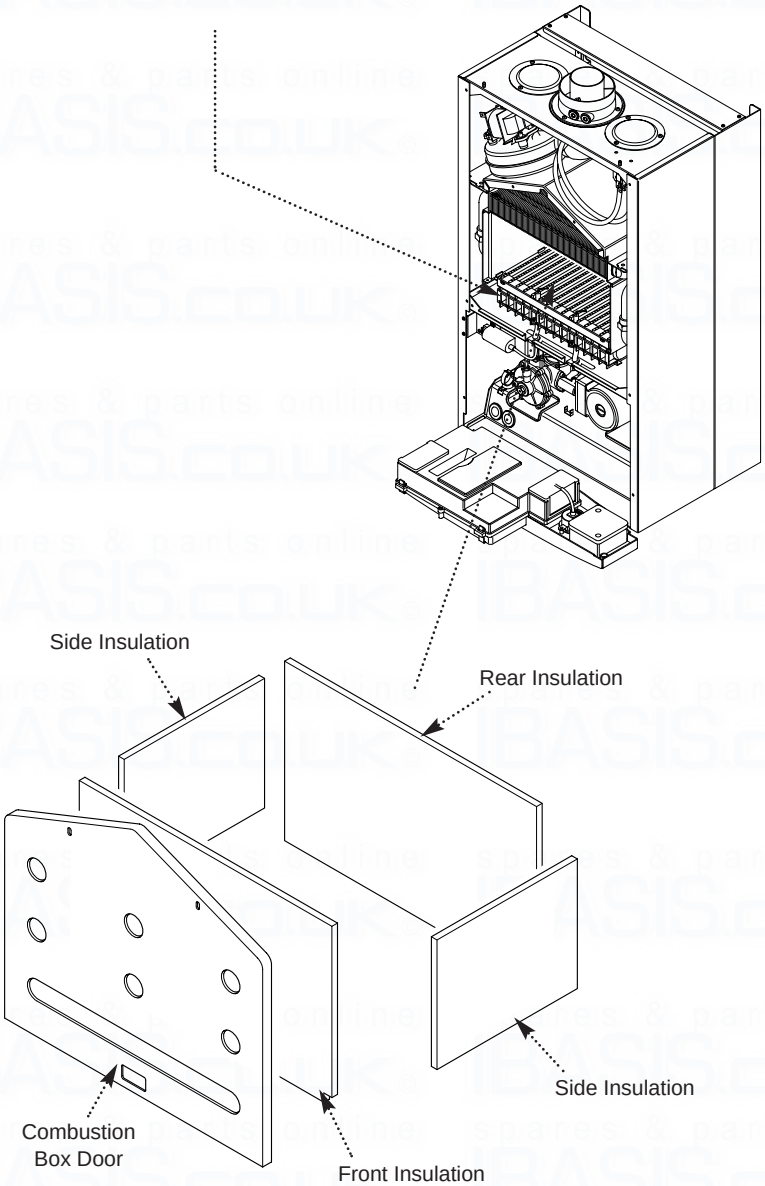

Fig. 65

12.5 Injectors (Fig. 64)

1. Remove the burner as described in Section 12.4.

2. Undo the screws securing the injector manifold to the inlet elbow and remove the manifold.

3. Unscrew and replace injectors as required and examine the sealing gasket, replacing as necessary. Reassemble in reverse order.

12.6 Electrodes (Fig. 64)

1. Remove the four screws securing the combustion box door and remove the door.

2. Draw the burner out of the combustion box, pulling the electrode grommets from the slots in the combustion box lower panel.

3. Disconnect the lead and grommet from the electrode being replaced. Undo the securing screw and withdraw the electrode to the burner.

4. Reassemble in reverse order.

12.7 Insulation (Fig. 65)

1. Remove the four screws securing the combustion box door and remove the door.

2. Slide the side insulation pieces carefully out of their carriers.

3. To replace the rear insulation piece it is necessary to remove the heat exchanger as described in Section 12.3 and slide out the side pieces.

4. The combustion box door insulation piece can be replaced by carefully bending up the two retaining tabs.

5. Replace all insulation pieces and reassemble in reverse order.

Fig. 66

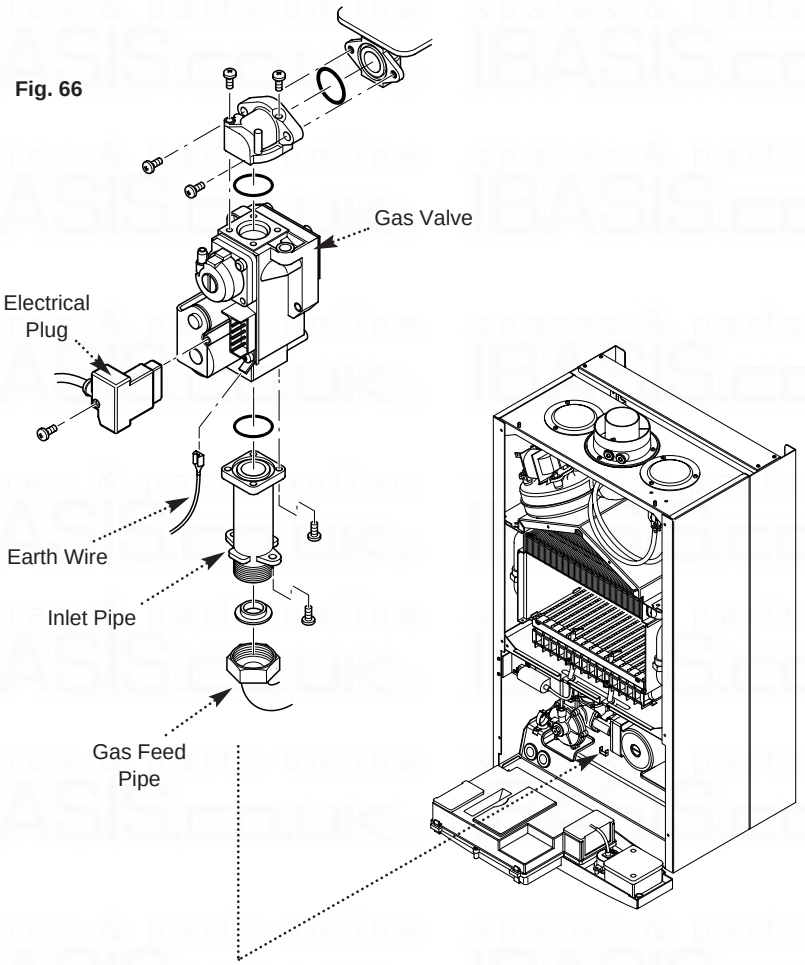

12.8 Gas Valve (Fig. 66)

1. Undo the nut on the gas feed pipe at the tap rail under the boiler.

2. Remove the securing screws and hinge the facia panel down.

3. Disconnect the earth wire and pressure sensing pipe from the valve. Undo the screw securing the electrical plug to the valve and disconnect the plug.

4. Remove the screws securing the inlet pipe flange to the tap rail and those securing the outlet manifold to the burner manifold.

5. Remove the valve from the boiler.

6. Note the orientation of the inlet pipe and outlet manifold. Undo the securing screws and remove the pipe and manifold.

7. Examine the 'O' ring seals for damage, replacing as necessary.

8. Fit the inlet pipe and outlet manifold to the new valve, ensuring that the 'O' ring seals are in place.

9. Reassemble in reverse order and check the burner pressure (Section 9.2).

Fig. 67

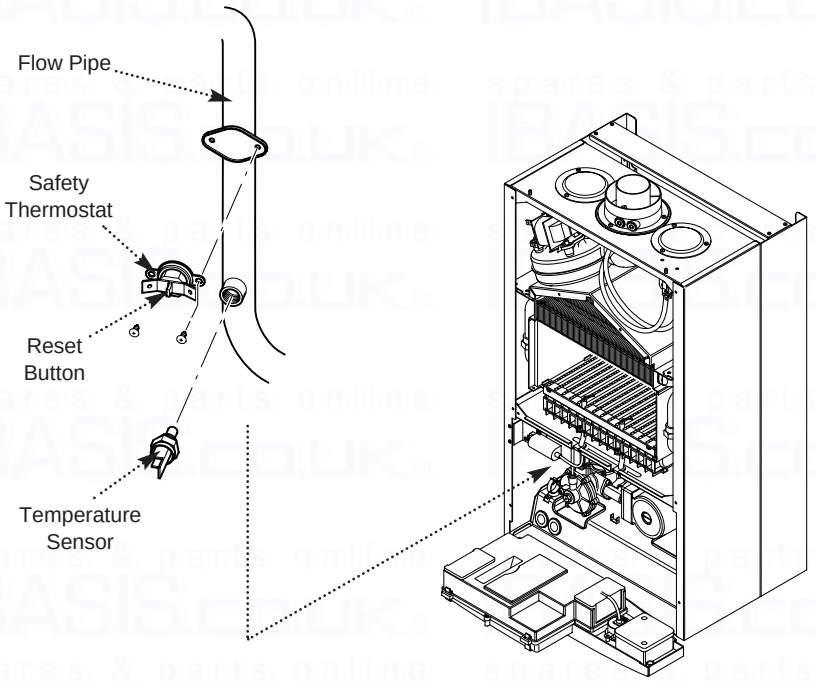

12.9 Temperature Sensor (Fig. 67)

1. Ease the retaining tab on the sensor away and disconnect the electrical plug.

2. Unscrew the sensor from it's pocket and reassemble in reverse order. The plug will only fit one way.

12.10 Safety Thermostat / Reset (Fig. 67)

1. Pull the two electrical connections off the thermostat.

2. Remove the screws securing the thermostat to the mounting plate on the flow pipe.

3. Reassemble in reverse order. The thermostat is not polarised - either wire can fit either terminal on the thermostat.

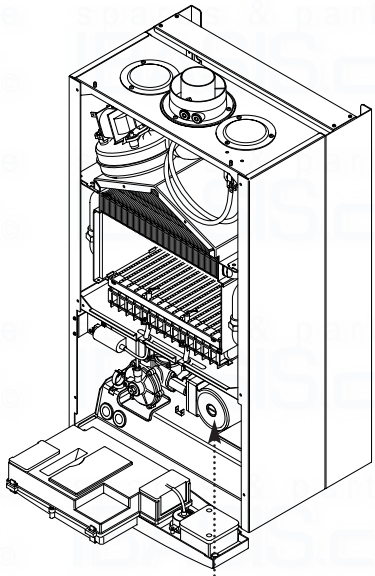

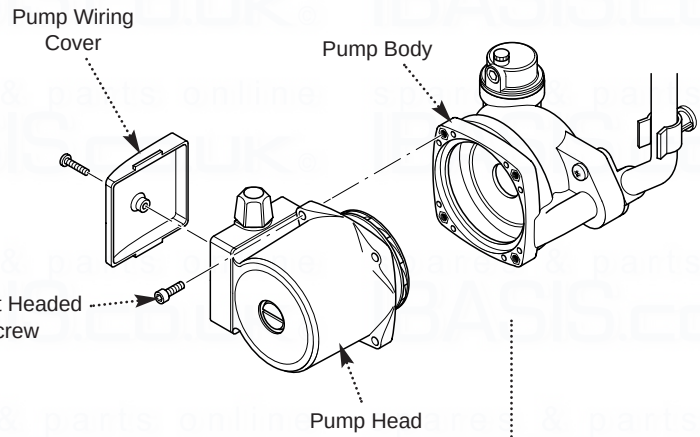

Fig. 68

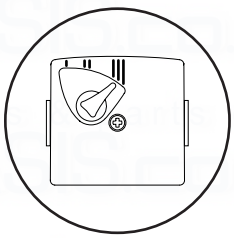

Pump Setting

Fig. 69

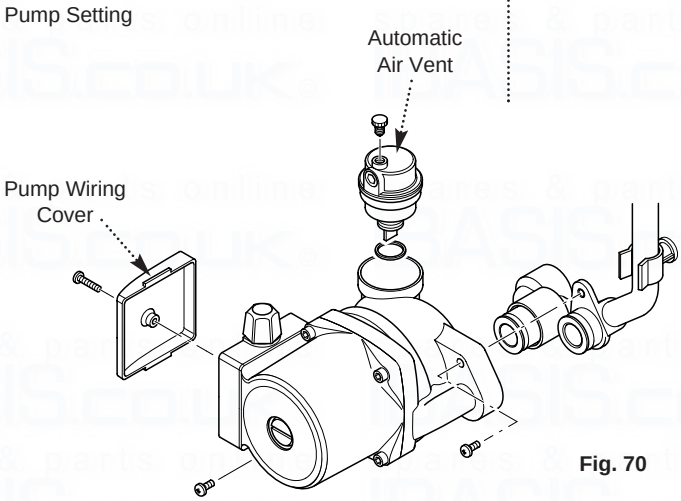

Fig. 70

12.11 Pump - Head Only (Figs. 68 & 69)

1. Drain the primary circuit and remove the socket head screws securing the pump head to the body and draw the head away.

2. Undo the screw on the pump wiring cover and remove the cover. Using a suitable flat bladed screw driver press the cable securing levers downwards to release each wire after noting their position.

3. A standard Grundfos 15-50 replacement head can now be fitted. Connect the wiring to the new head. The pump speed must be set to 3.

4. Reassemble in reverse order.

12.12 Pump - Complete (Figs. 69 & 70)

1. Drain the primary circuit and unscrew the automatic air vent from the pump body. Undo the two screws securing the body to the pipe and manifold and draw the pump forwards.

2. Undo the screw on the pump wiring cover and remove the cover. Using a suitable flat bladed screw driver press the cable securing levers downwards to release each wire after noting their position.

3. Connect the wiring to the new pump. Examine the ‘O’ ring seals on the return pipe and manifold, replacing if necessary.

4. Fit the air vent to the pump body and reassemble in reverse order.

12.13 Automatic Air Vent (Fig. 70)

1. Drain the primary circuit and unscrew the automatic air vent from the pump body.

2. Examine the ‘O’ ring seal, replacing if necessary, and fit it to the new automatic air vent.

3. Reassemble in reverse order.

spares & parts online IBASIS.CO.UK

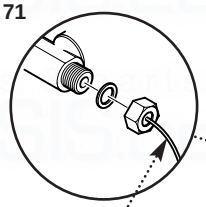

Fig. 71

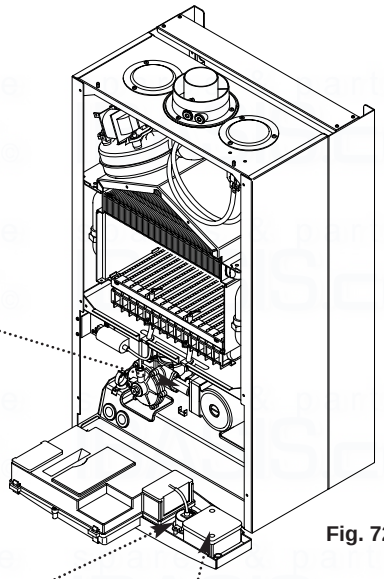

Fig. 72

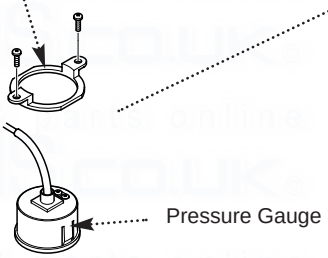

Fig. 73

12.14 Pressure Gauge

1. Drain the primary circuit and undo the nut on the pressure gauge capillary (Fig. 71).

2. Remove the timer cover and ease the timer wiring aside. Undo the screws securing the gauge retaining bracket (Fig. 72).

3. Remove the bracket and gauge assembly. Depress the barbs on the side of the gauge and remove the retaining bracket (Fig. 73).

4. Reassemble in reverse order.

12.15 Expansion Vessel

1. To replace the expansion vessel it is necessary to remove the boiler from the wall.

NOTE: Alternatively a vessel of equivalent capacity can be fitted on the system return pipe as close as possible to the boiler.

2. Drain the system and undo all gas and water connections. Remove the flue elbow.

3. Lift the boiler off the wall bracket and lay it on it's side on a clean flat surface.

4. Undo the nut on the vessel outlet spigot, and remove the locknut and spring washer securing the spigot to the boiler chassis (Fig. 74).

5. Undo the screws and remove the appliance upper cross member (Fig. 76). Slide the expansion vessel out of the retaining clips (Fig. 75).

6. Reassemble in reverse order. Fully recommission the appliance and system.

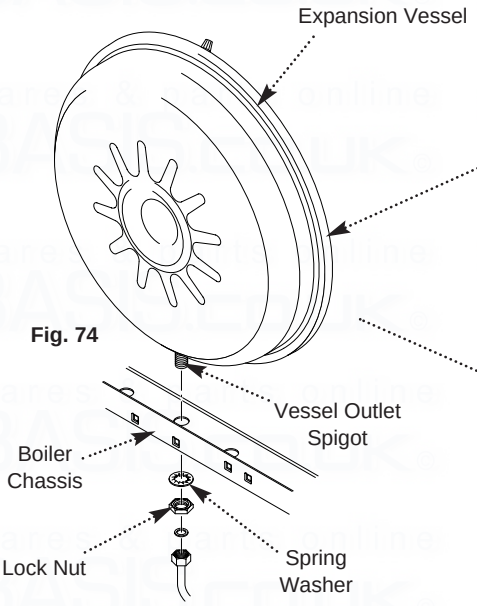

Fig. 74

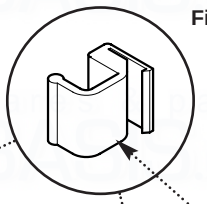

Fig. 75

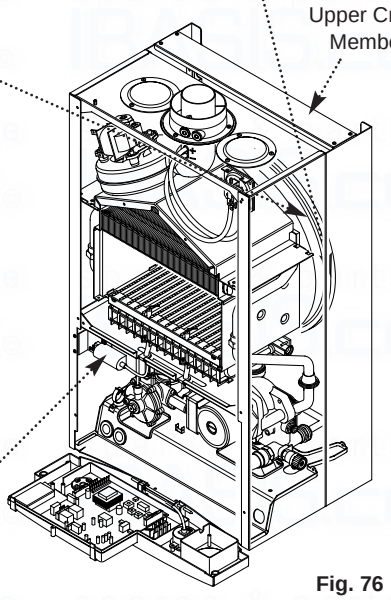

Fig. 76

12.16 Spark Generator (Fig. 77)

1. Pull the electrode lead off the spark generator. Remove the screws and spring washers securing the generator to it's mounting bracket.

2. Pull the rubber shroud off the generator input plug and disconnect the plug.

3. Reassemble in reverse order.

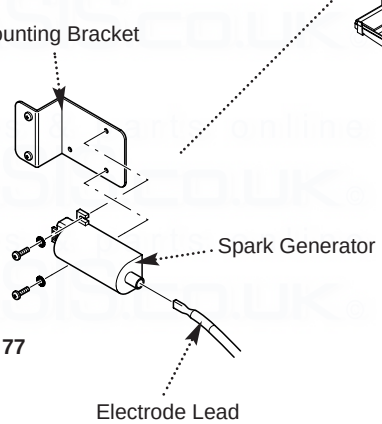

Fig. 77

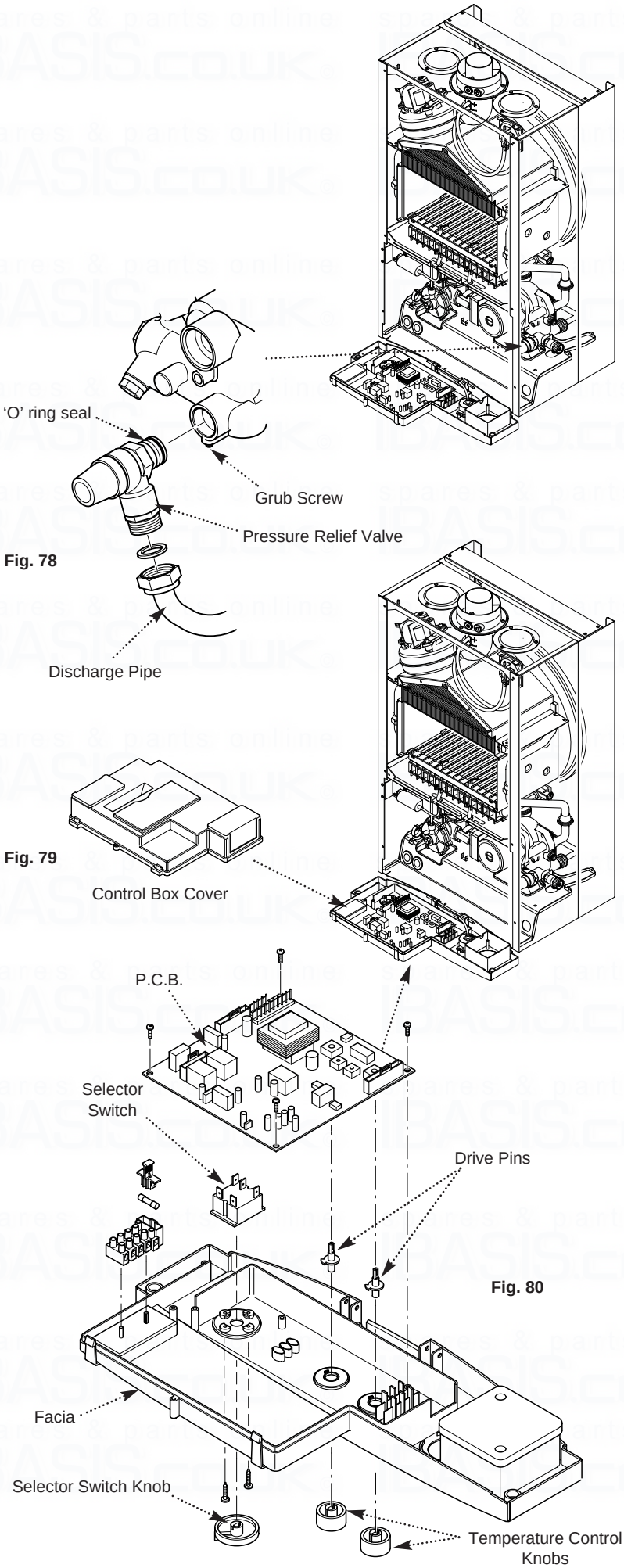

Fig. 78

Fig. 79

Fig. 80

12.17 Pressure Relief Valve (Fig. 78)

1. Drain the primary circuit.

2. Disconnect the discharge pipe from the valve. Using a suitable hexagon key undo the grub screw sufficiently to release the valve.

3. Note the orientation of the valve, rotate it and withdraw it from the manifold.

4. Fit the new valve and 'O' ring seal and set to the previously noted orientation. Reassemble in reverse order.

12.18 P.C.B.

1. Note the settings of the temperature control knobs. Rotate the knobs fully anticlockwise and pull them off the drive pins (Fig. 80).

2. Remove the screws securing the control box cover and release the cover retaining barbs from their slots. Disengage the rear of the cover from the control box hinge pin (Fig. 79).

3. Note the position of all plugs and wires on the P.C.B. and disconnect them. Pull the drive pins off the P.C.B.

4. Undo the securing screws and remove the P.C.B.

5. Reassemble in reverse order, ensuring that the temperature controllers are reset to their previous positions (Fig. 80).

12.19 Selector Switch

1. Note the setting of the selector switch knob and carefully pull it off the facia (Fig. 80).

2. Remove the screws securing the control box cover and release the cover retaining barbs from their slots. Disengage the rear of the cover from the control box hinge pin (Fig. 79).

3. Note the position of the electrical connections and the orientation of the switch. Remove the electrical connections.

4. Remove the screws securing the switch to the facia panel (Fig. 80).

5. Fit the new switch, ensuring that it is correctly positioned and reassemble in reverse order.

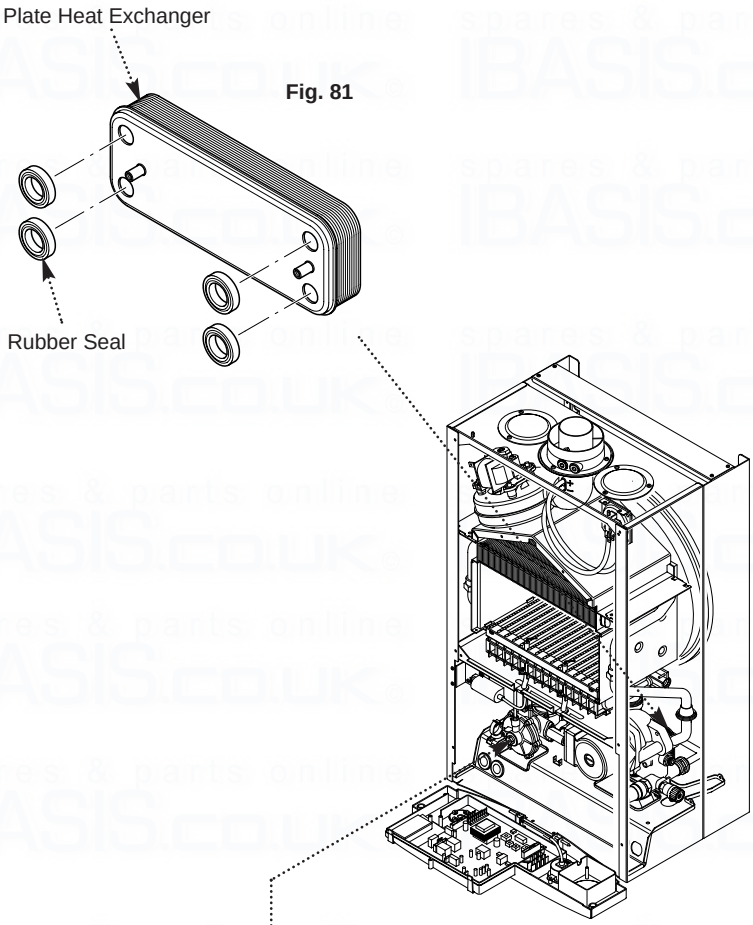

Fig. 81

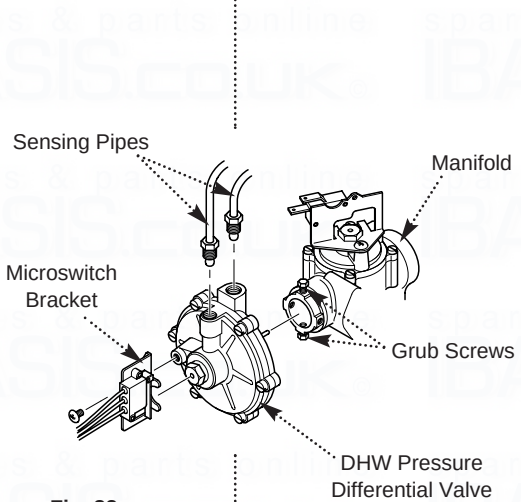

Fig. 82

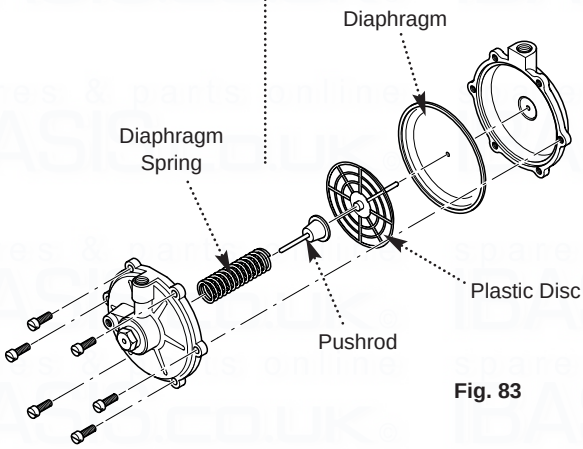

Fig. 83

12.20 Plate Heat Exchanger (Fig. 81)

1. Drain the primary circuit.

2. While supporting the heat exchanger undo the screws securing it to the brass manifolds.

3. Withdraw the heat exchanger upwards and to the left of the gas valve, taking care not to damage any wires or controls.

Seals

4. There are four rubber seals between the manifolds and heat exchanger which may need replacement.

5. Ease the seals out of the manifold. Replace carefully, ensuring that when the seal is inserted into the manifold it is parallel and pushed fully in.

6. When fitting the new heat exchanger note that the left hand location stud is offset towards the centre more than the right hand one.

7. Reassemble in reverse order.

12.21 Diverter Valve Assembly (Fig. 82)

The diverter valve assembly comprises of a central heating pressure differential valve and a domestic hot water pressure differential valve. These are connected to a manifold which is joined to the plate heat exchanger.

DHW Pressure Differential Valve (Fig. 83)

1. Drain the primary circuit.

2. Undo the screw securing the microswitch bracket to the valve (Fig. 82).

3. Disconnect the two sensing pipes and slacken the grub screws securing the valve to the diverter manifold.

4. Draw the valve away from the diverter manifold. The valve may now be replaced or split to examine the diaphragm.

5. To examine the diaphragm hold the valve body securely and carefully remove the six screws. The diaphragm spring will force apart the two halves of the valve.

6. Remove the plastic disc and pushrod assembly. Carefully examine the diaphragm and replace it if there is any damage.

7. Reassemble in reverse order.

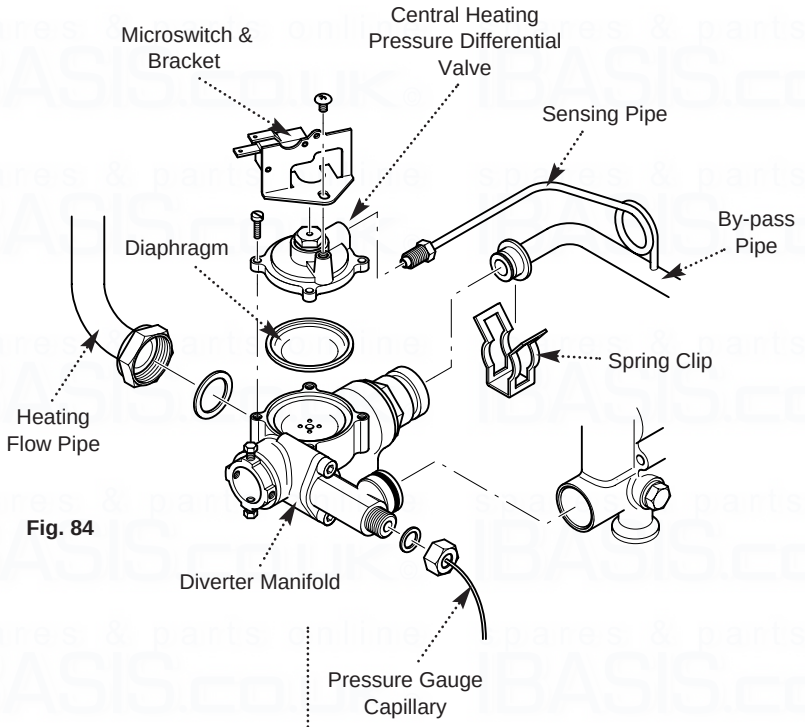

Fig. 84

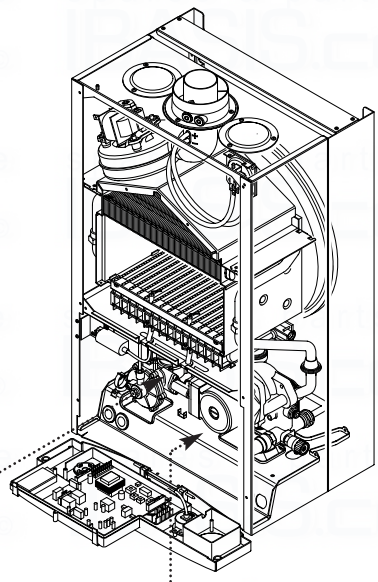

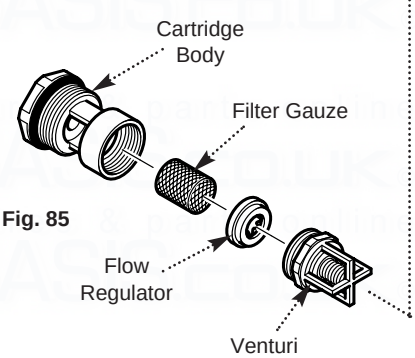

Fig. 85

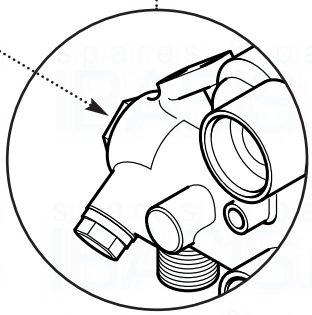

Fig. 86

12.21 Diverter Valve Assembly (Cont)

CH Pressure Differential Valve (Fig. 84)

1. Remove the DHW pressure differential valve as described above.

2. From the brass diverter manifold undo the nut on the heating flow pipe. Remove the screw securing the diverter manifold to the appliance lower bracket.

3. Disconnect the pressure gauge capillary from the diverter manifold and remove the two wires from the microswitch.

4. Prise off the spring clip securing the by-pass pipe to the diverter manifold and disconnect the sensing pipe.

5. Ease the diverter manifold out of the plate heat exchanger manifold. Remove the assembly from the appliance.

6. Undo the screw securing the microswitch bracket to the valve body. The sensor may now be dismantled to examine the diaphragm.

7. To examine the diaphragm hold the assembly securely and carefully remove the four screws. The diaphragm spring will force the two halves of the valve apart.

8. Carefully examine the diaphragm and replace it if there is any damage.

9. Reassemble in reverse order.

CH Pressure Microswitch
(Fig. 84)

1. Remove the two wires from the pressure microswitch.

2. Undo the screw securing the microswitch bracket to the valve body.

3. Reassemble in reverse order.

12.22 Flow Regulator (Figs. 85 & 86)

1. Undo the filter cartridge from the inlet/return manifold.

2. Unscrew the venturi and remove the flow regulator.

3. Check the cleanliness of the filter gauze, rinsing thoroughly in clean water as necessary. Fit the new flow regulator and reassemble in reverse order.

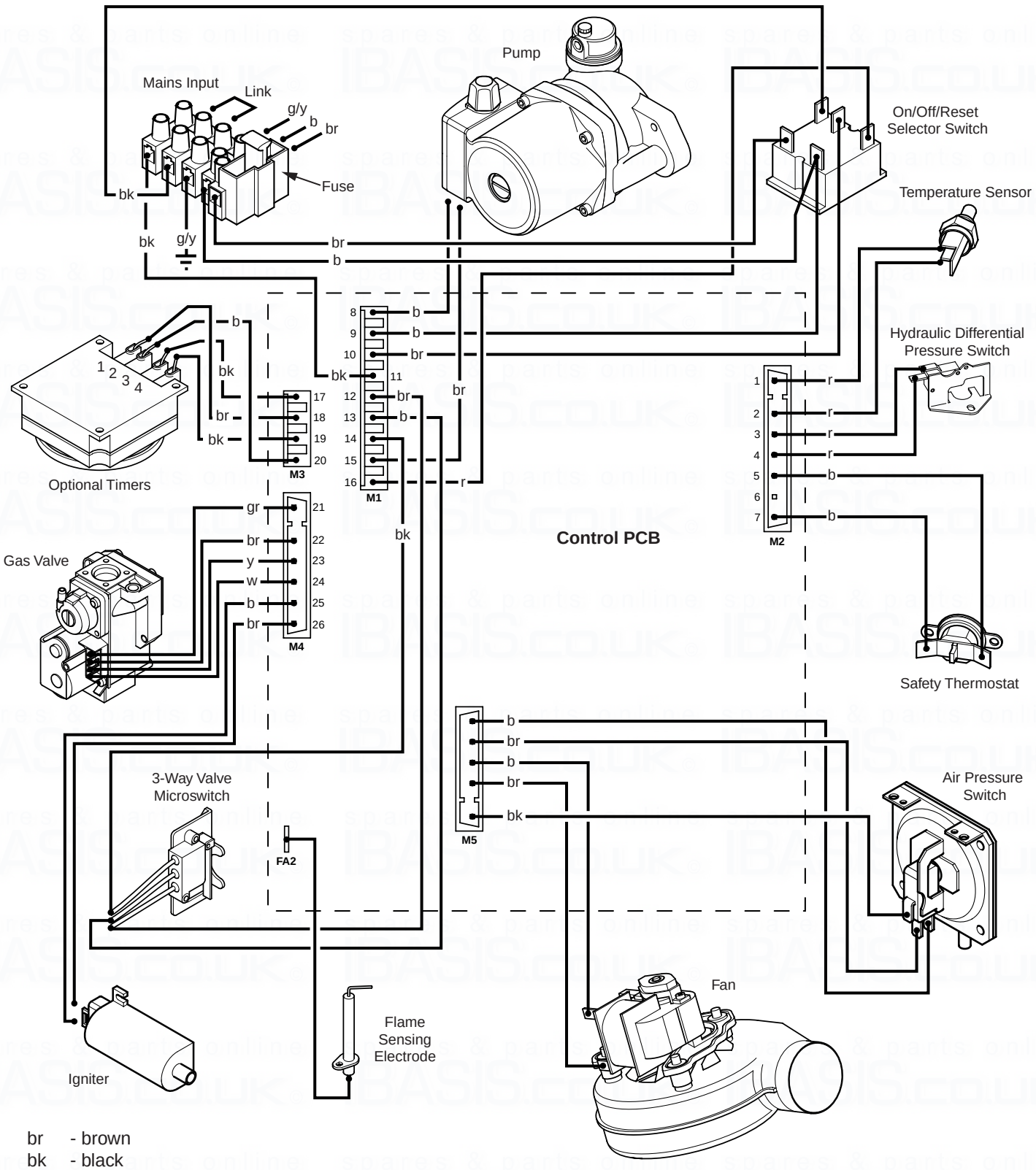

br - brown
bk - black
b - blue
r - red
y - yellow
g/y - green / yellow
w - white
gr - grey

Carry out initial fault finding checks

1. Check that gas, water and electrical supplies are available at the boiler. Electrical supply = 230V ~ 50 Hz.
   CH water system pressurised to 0.5 bar when the boiler is cold. The preferred minimum gas pressure is 19.5mbar (natural gas), 27mbar (butane) or 36mbar (propane).
2. Carry out electrical system checks, i.e. Ground Continuity, Resistance to Ground, Short Circuit and Polarity with a suitable meter.
   Note: These checks must be repeated after any servicing or fault finding.
3. Ensure all external controls are calling for heat and check all external and internal fuses. Before any servicing or replacement of parts ensure the gas and electrical supplies are isolated.

Refer to Section 13.0 “Illustrated Wiring Diagram” for position of numbered terminals

Central Heating - Follow operational sequence

NOTE: When instructed to turn the Selector to the reset position turn the Selector Switch fully anticlockwise against the spring pressure and hold for 2 seconds to reset the boiler.

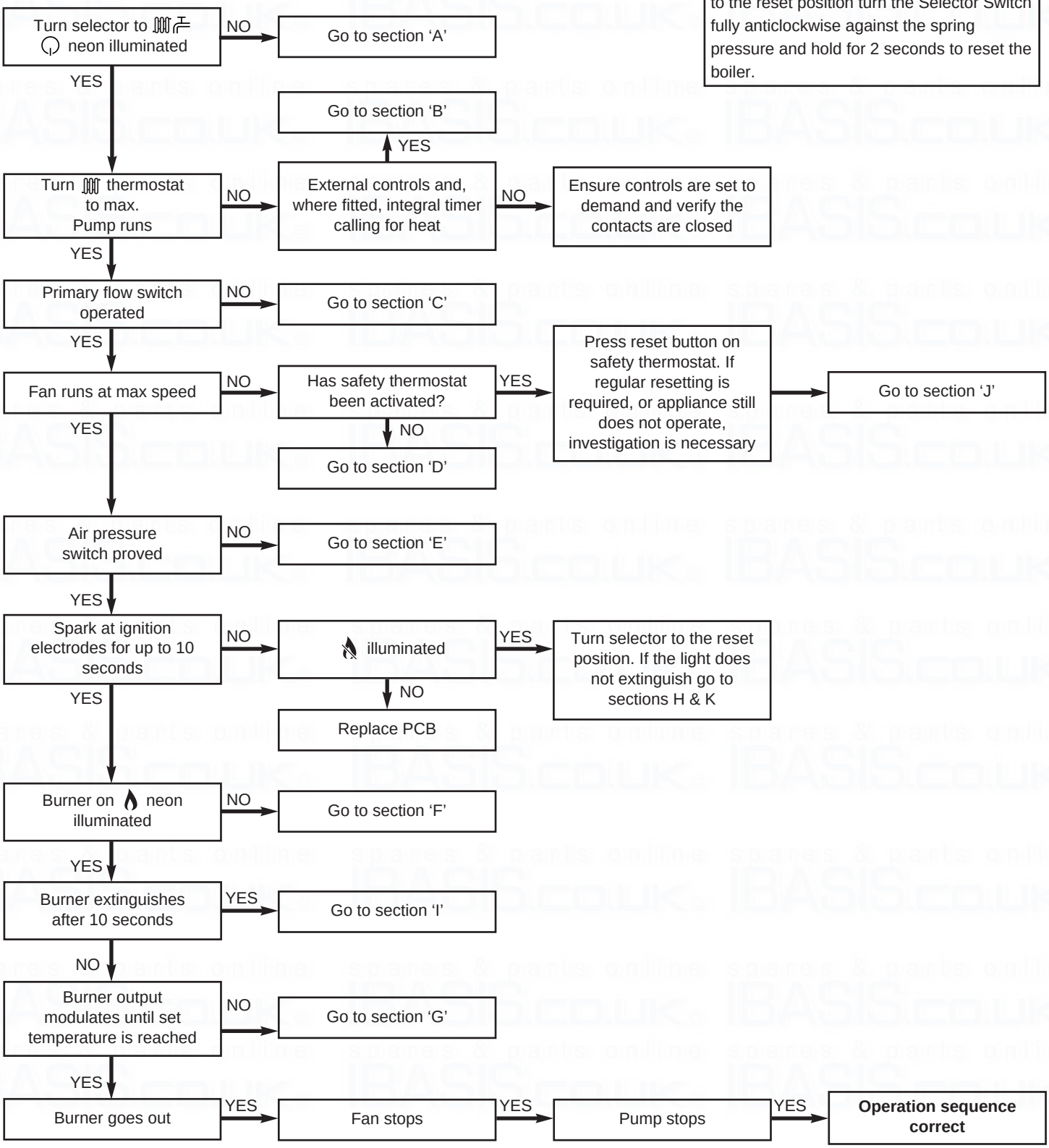

Domestic Hot Water - Follow operational sequence

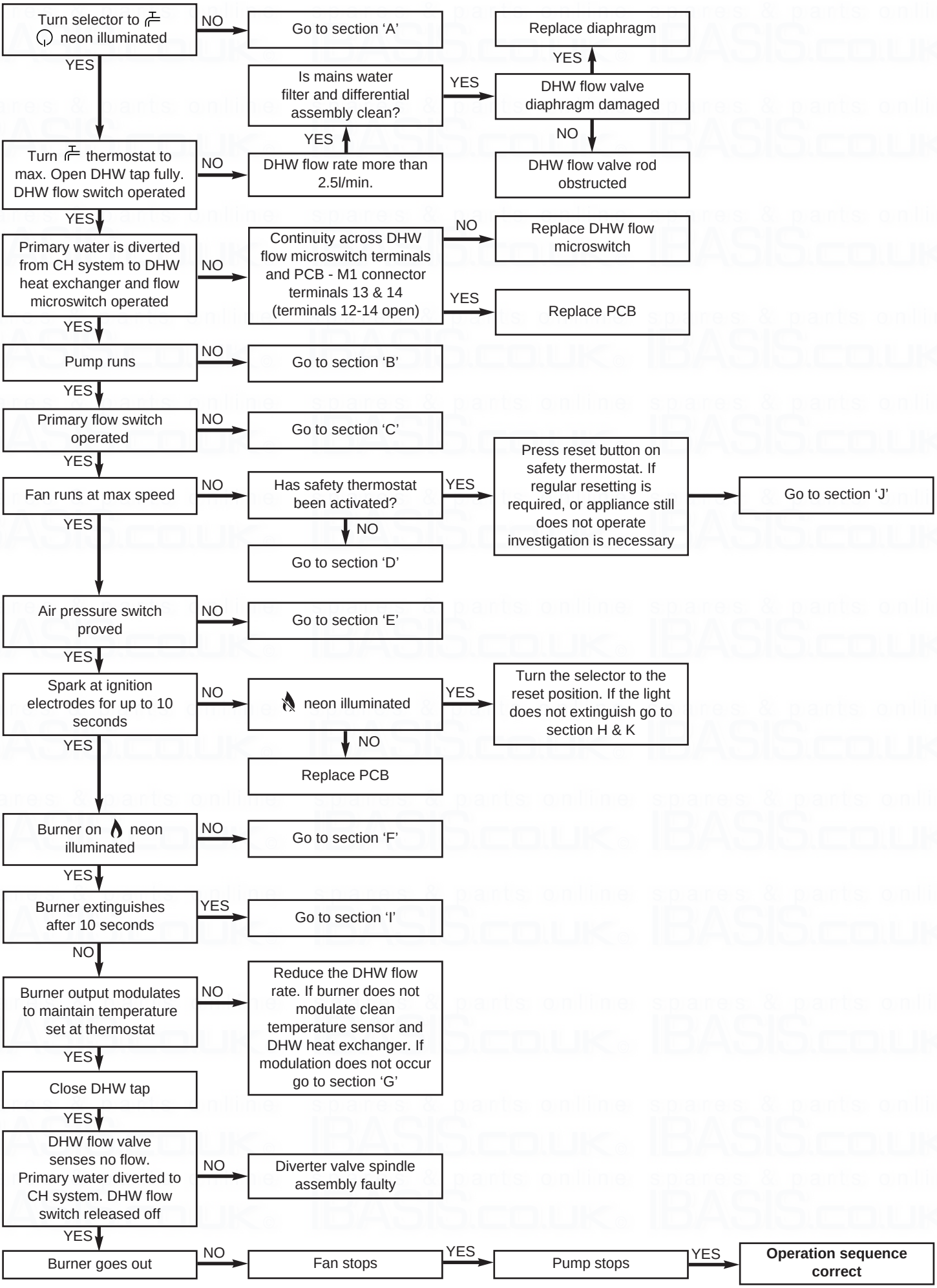

Fault Finding Solutions Sections A to E

A

Is there 230V at:

1. Main terminals L and N — NO → Check electrical supply
2. Main terminal fuse — YES → Replace fuse
3. Selector terminals a & b and a & 3. PCB - M1 connector terminals 9 & 10 — NO → Check wiring Replace selector

→ neon illuminated — NO → Replace PCB

B

Is there 230V at:

1. Pump — NO → If pump jammed, release → Replace pump
2. PCB - M1 connector terminals 8 & 15 — NO → Replace PCB
   - YES → Change pump supply cable

C

1. CH system pressure 0.5 to 1.5 bar — NO → Re-pressurise system
2. Check the tap of the automatic air vent is opened — NO → Open the automatic air vent
3. Primary flow valve diaphragm damaged — YES → Replace diaphragm
   - NO → Flow valve rod obstructed

D

1. Continuity across flow microswitch and PCB M2 connector terminals 3 & 4 — NO → Replace microswitch
2. Primary temperature sensor faulty. Cold resistance approx. 11K ohms (resistance reduces with increase in temp.) — YES → Replace sensor
3. Fan connections correct at fan. PCB - M5 connector, is 230V across terminals 28 & 29 — YES → Fan jammed or faulty winding — YES → Replace fan
   - NO → Replace PCB

E

Check and correct if necessary
1. Electrical and pressure tube connections
2. Blockage of pressure tubes
3. Restriction in flue
4. Venturi

NO → Replace air pressure switch

F

Gas at burner → NO → Ensure gas is on and purged

↓

PCB - M4 connector is approx 70-140V DC, terminals 23 & 24 → YES → Replace gas valve

NO ↓

neon illuminated → YES → Turn selector switch to reset position R

NO ↓

Replace PCB

G

1. Check the burner setting pressure of the gas valve (see Section 9.2 of Commissioning)

2. Voltage at main PCB - M4 connector is:
approx 70 - 140V DC across terminals 23 & 24
approx 20 - 70V DC across terminals 21 & 22
Min burner pressure approx 14 mA DC across terminals 21 & 22
Max burner pressure approx 35 mA DC across terminals 21 & 22

YES → Replace gas valve

NO → Replace PCB

H

Check and correct if necessary
1. Ignition electrode and lead
2. Electrode connection
3. Spark gap and position

YES → 230V at Main PCB - M4 connector across terminals 25 & 26 and at igniter. Check wiring

NO → Replace PCB

YES → Replace igniter

I

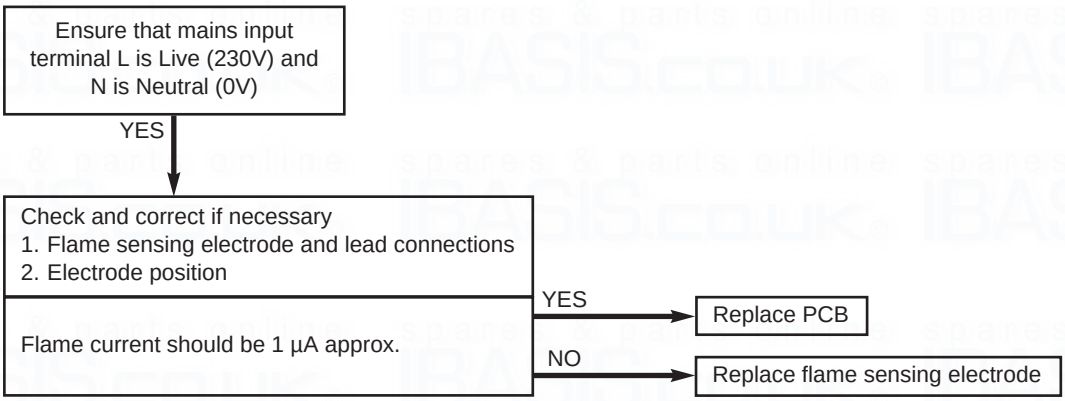
Ensure that mains input terminal L is Live (230V) and N is Neutral (0V)
YES
Check and correct if necessary
1. Flame sensing electrode and lead connections
2. Electrode position
Flame current should be 1 µA approx.
YES
Replace PCB
NO
Replace flame sensing electrode

J

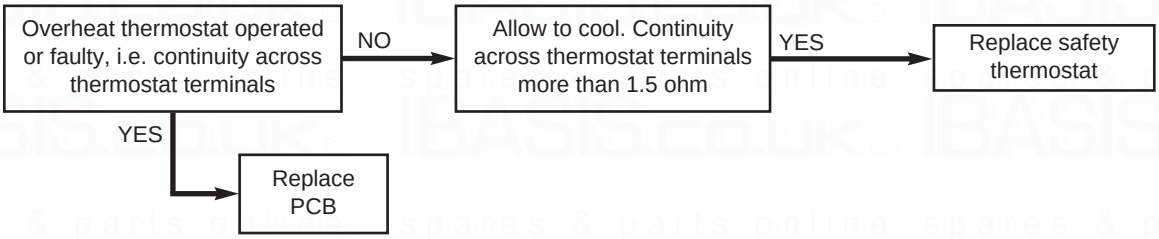
Overheat thermostat operated or faulty, i.e. continuity across thermostat terminals
NO
Allow to cool. Continuity across thermostat terminals more than 1.5 ohm
YES
Replace safety thermostat
YES
Replace PCB

K

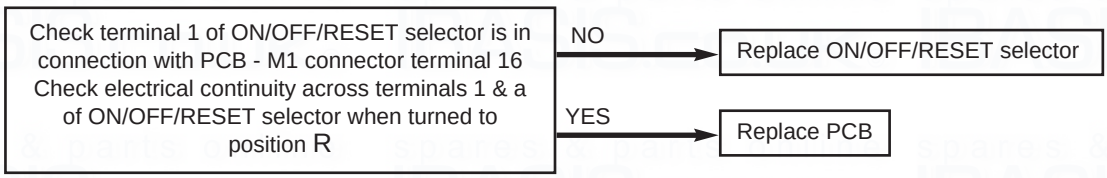
Check terminal 1 of ON/OFF/RESET selector is in connection with PCB - M1 connector terminal 16
Check electrical continuity across terminals 1 & a of ON/OFF/RESET selector when turned to position R
NO
Replace ON/OFF/RESET selector
YES
Replace PCB

15.0 Short Parts List

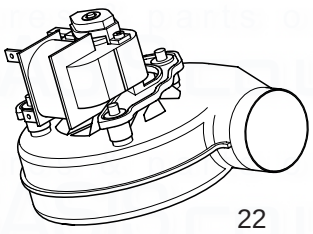

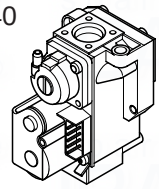

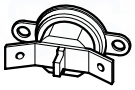

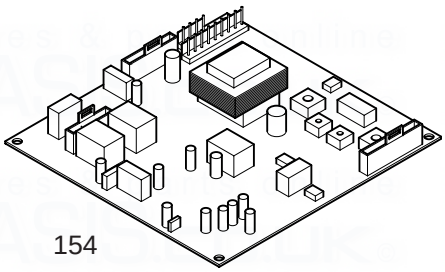

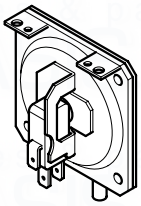

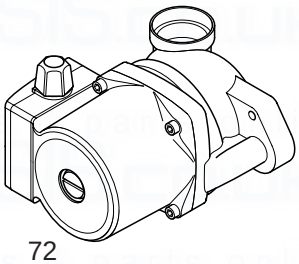

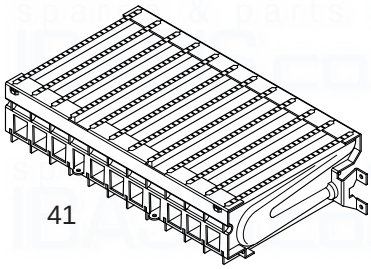

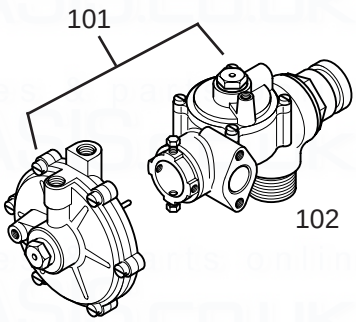

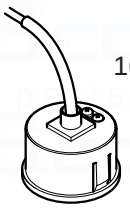

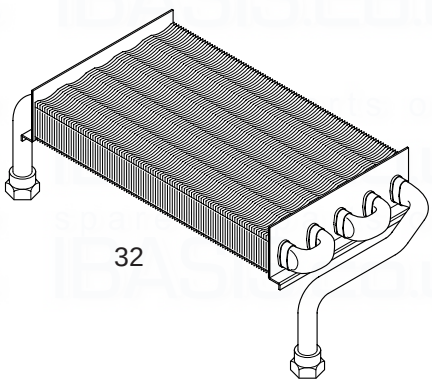

Short Parts List

Key No.	G.C. No.	Description	Manufacturers Part No.
22	E66 383	Fan	248001
23	393-497	Pressure Switch	247380
32	E66 393	Heat Exchanger	248016
41	E66 398	Burner	248029
44	E66 402	Injector - 1.28 NG	248210
44		Injector - 0.77 LPG	248211
59	E66 408	Electrode Lead	248037
63	E66 411	Spark or Sensing Electrode	247384
72	E66 413	Pump Complete	248041
101	E66 432	Hydraulic Outlet Assembly	248061
102	E66 434	Valve - 3-Way Assembly	248062
103	343 619	Pressure Differential Assy	248063
131	E05 234	Temperature Sensor	248068
135	E66 697	Safety Limit Thermostat	248078
140	E66 532	Gas Valve	248084
154	E66 450	PCB	248075
169	E66 453	Pressure Gauge	248090

spares & parts online IBASIS.CO.UK

16.0 Notes

spares & parts online IBASIS.CO.UK

POTTERTON

Potterton, Baxi UK Limited, Brownedge Road, Bamber Bridge, Preston, Lancashire. PR5 6SN
After Sales Service 08706 096 096 Technical Enquiries 08706 049 049
www.baxi.com

Comp Nº 249083 - Iss 2 - 6/01