You can rely on POTTERTON

# Installation & Service Instructions

# Performa 24 Eco HE

## Condensing Combination Boiler

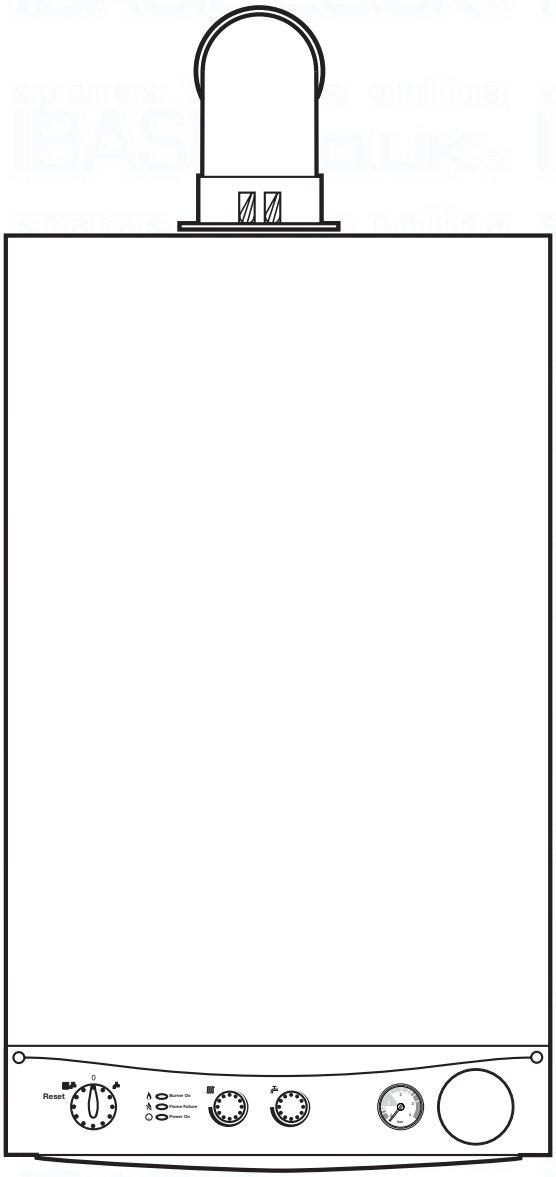


These instructions include the Benchmark Commissioning Checklist and should be left with the user for safe keeping.

© Baxi Heating UK Ltd 2011

Potterton Performa 24 Eco HE
G.C.N° 47 393 11

### The Benchmark Scheme

Benchmark places responsibilities on both manufacturers and installers. The purpose is to ensure that customers are provided with the correct equipment for their needs, that it is installed, commissioned and serviced in accordance with the manufacturer's instructions by competent persons and that it meets the requirements of the appropriate Building Regulations. The Benchmark Checklist can be used to demonstrate compliance with Building Regulations and should be provided to the customer for future reference.

Installers are required to carry out installation, commissioning and servicing work in accordance with the Benchmark Code of Practice which is available from the Heating and Hotwater Industry Council who manage and promote the Scheme. Visit **www.centralheating.co.uk** for more information.

## Building Regulations and the Benchmark Commissioning Checklist

Building Regulations (England & Wales) require notification of the installation of a heating appliance to the relevant Local Authority Building Control Department. From 1 April 2005 this can be achieved via a Competent Persons Self Certification Scheme as an option to notifying the Local Authority directly. Similar arrangements will follow for Scotland and will apply in Northern Ireland from 1 January 2006.

The Health & Safety Executive operates the 'Gas Safe Register', a self-certification scheme for gas heating appliances.

These arrangements represent a change from the situation whereby compliance with Building Regulations was accepted as being demonstrated by completion of the Benchmark Logbook (which was then left on site with the customer).

With the introduction of Self Certification Schemes, the Benchmark Logbook is being withdrawn. However, a similar document in the form of a commissioning checklist and service interval record is incorporated at the back of these instructions.

Potterton is a member of the Benchmark initiative and fully supports the aims of the programme. Its aim is to improve the standards of installation and commissioning of central heating systems in the UK and to encourage the regular servicing of all central heating systems to ensure safety and efficiency.

Building Regulations require that installations should comply with manufacturer's instructions. It is therefore important that the commissioning checklist is completed by the installer. The relevant section of Building Regulations only relates to dwellings. Therefore the checklist only applies if the appliance is being installed in a dwelling or some related structure.

The flowchart opposite gives guidance for installers on the process necessary to ensure compliance with Building Regulations.

## Contents


| Section | | Page |
|---|---|---|
| | Legislation | 4 |
| 1.0 | Introduction | 6 |
| 2.0 | General Layout | 7 |
| 3.0 | Appliance Operation | 8 |
| 4.0 | Technical Data | 9 |
| 5.0 | Dimensions and Fixings | 10 |
| 6.0 | System Details | 11 |
| 7.0 | Site Requirements | 14 |
| 8.0 | Flue Options | 18 |
| 9.0 | Plume Displacement | 23 |
| 10.0 | Installation | 27 |
| 11.0 | Commissioning the Boiler | 32 |
| 12.0 | Completion | 34 |
| 13.0 | Servicing the Boiler | 35 |
| 14.0 | Changing Components | 37 |
| 15.0 | Illustrated Wiring Diagram | 47 |
| 16.0 | Fault Finding | 48 |
| 17.0 | Fault Indication Display | 52 |
| 18.0 | Short Parts List | 53 |
| | Benchmark Checklist | 54 |


**© Baxi Heating UK Ltd 2011** All rights reserved. No part of this publication may be reproduced or transmitted in any form or by any means, or stored in any retrieval system of any nature (including in any database), in each case whether electronic, mechanical, recording or otherwise, without the prior written permission of the copyright owner, except for permitted fair dealing under Copyrights, Designs and Patents Act 1988.

Applications for the copyright owner's permission to reproduce or make other use of any part of this publication should be made, giving details of the proposed use, to the following address:

The Company Secretary, Baxi Heating UK Ltd,
Brooks House, Coventry Road, Warwick. CV34 4LL

Full acknowledgement of author and source must be given.

**WARNING:** Any person who does any unauthorised act in relation to a copyright work may be liable to criminal prosecution and civil claims for damages.

CE 0086

WRAS APPROVED PRODUCT

benchmark COLLECTIVE MARK
THE MARK OF QUALITY FOR THE INSTALLATION, COMMISSIONING AND SERVICING OF DOMESTIC HEATING AND HOT WATER SYSTEMS

IPX4D

BSI™
ISO 9001
FM 00866

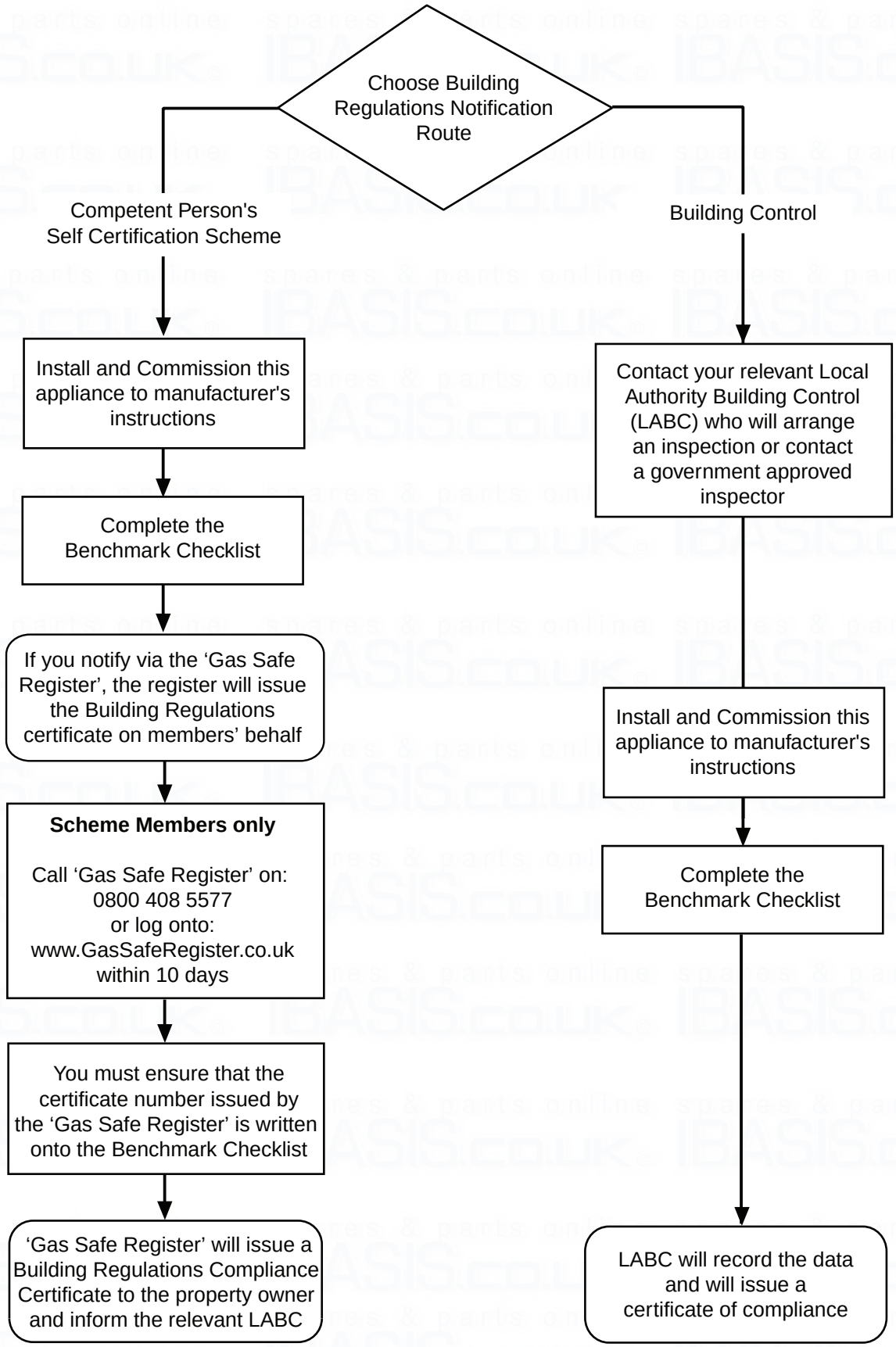


© Baxi Heating UK Ltd 2011

## Legislation

**IMPORTANT -** Installation, Commissioning, Service & Repair

This appliance must be installed in accordance with the manufacturer's instructions and the regulations in force. Read the instructions fully before installing or using the appliance.

In GB, this must be carried out by a competent person as stated in the Gas Safety (Installation & Use) Regulations.

**Definition of competence:** A person who works for a Gas Safe registered company and holding current certificates in the relevant ACS modules, is deemed competent.

All Gas Safe registered engineers carry an ID card with their licence number and a photograph. You can check your engineer is registered by telephoning 0800 408 5500 or online at www.GasSafeRegister.co.uk

In IE, this must be carried out by a competent person as stated in I.S. 813 "Domestic Gas Installations".

The addition of anything that may interfere with the normal operation of the appliance without express written permission from the manufacturer or his agent could invalidate the appliance warranty. In GB this could also infringe the Gas Safety (Installation and Use) Regulations.

**Warning -** Check the information on the data plate is compatible with local supply conditions.

The boiler meets the requirements of Statutory Instrument " The Boiler (Efficiency) Regulations 1993 N° 3083" and is deemed to meet the requirements of Directive 92/42/EEC on the energy efficiency requirements for new hot water boilers fired with liquid or gaseous fuels:-

Type test for purpose of Regulation 5 certified by:
Notified Body 0051.

Product/Production certified by:
Notified Body 0086.

For GB/IE only.

**This company declare that no substances harmful to health are contained in the appliance or used during appliance manufacture.**

**The appliance is suitable only for installation in GB and IE and should be installed in accordance with the rules in force, and only used in a suitably ventilated location.**

In GB, the installation must be carried out by a Gas Safe Registered Installer. It must be carried out in accordance with the relevant requirements of the:

- Gas Safety (Installation & Use) Regulations.
- The appropriate Building Regulations either The Building Regulations, The Building Regulations (Scotland), Building Regulations (Northern Ireland).
- The Water Fittings Regulations or Water Byelaws in Scotland.
- The Current I.E.E. Wiring Regulations.

Where no specific instructions are given, reference should be made to the relevant British Standard Code of Practice.

In IE, the installation must be carried out by a competent Person and installed in accordance with the current edition of I.S. 813 'Domestic Gas Installations', the current Building Regulations and reference should be made to the current ETCI rules for electrical installation.

**All systems must be thoroughly flushed and treated with inhibitor (see section 6.2).**

**Codes of Practice,** most recent version should be used

**In GB the following Codes of Practice apply:**

| Standard | Scope |
|---|---|
| BS 6891 | Gas Installation. |
| BS 5546 | Installation of hot water supplies for domestic purposes. |
| BS EN 12828 | Heating systems in buildings. |
| BS EN 14336 | Installation & commissioning of water based heating systems. |
| BS 6798 | Installation of gas fired hot water boilers. |
| BS 5440 Part 1 | Flues. |
| BS 5440 Part 2 | Ventilation. |
| BS 7074 | Expansion vessels and ancillary equipment for sealed water systems. |
| BS 7593 | Treatment of water in domestic hot water central heating systems. |

**In IE the following Codes of Practice apply:**

| Standard | Scope |
|---|---|
| I.S. 813 | Domestic Gas Installations. |
| The following standards give valuable additional information; | |
| BS 5546 | Installation of hot water supplies for domestic purposes. |
| BS EN 12828 | Heating systems in buildings. |
| BS EN 14336 | Installation & commissioning of water based heating systems. |
| BS 7074 | Expansion vessels and ancillary equipment for sealed water systems. |
| BS 7593 | Treatment of water in domestic hot water central heating systems. |


© Baxi Heating UK Ltd 2011

## General

The following advice should be adhered to, from when first handling the boiler to the final stages of installation, and also during maintenance.

Most injuries as a result of inappropriate handling and lifting are to the back, but all other parts of the body are vulnerable, particularly shoulders, arms and hands. Health & Safety is the responsibility of EVERYONE.

There is no 'safe' limit for one man - each person has different capabilities. The boiler should be handled and lifted by TWO PEOPLE.

Do not handle or lift unless you feel physically able.

Wear appropriate Personal Protection Equipment e.g. protective gloves, safety footwear etc.

## Preparation

Co-ordinate movements - know where, and when, you are both going.

Minimise the number of times needed to move the boiler - plan ahead.

Always ensure when handling or lifting the route is clear and unobstructed. If possible avoid steps, wet or slippery surfaces, unlit areas etc. and take special care on ladders/into lofts.

## Technique

When handling or lifting always use safe techniques - keep your back straight, bend your knees. Don't twist - move your feet, avoid bending forwards and sideways and keep the load as close to your body as possible.

Where possible transport the boiler using a sack truck or other suitable trolley.

Always grip the boiler firmly, and before lifting feel where the weight is concentrated to establish the centre of gravity, repositioning yourself as necessary. See the 'Installation' section of these instructions for recommended lift points.

## Remember

The circumstances of each installation are different. Always asses the risks associated with handling and lifting according to the individual conditions.

If at any time when installing the boiler you feel that you may have injured yourself STOP !!
DO NOT 'work through' the pain - you may cause further injury.

**IF IN ANY DOUBT DO NOT HANDLE OR LIFT THE BOILER - OBTAIN ADVICE OR ASSISTANCE BEFORE PROCEEDING !!**

© Baxi Heating UK Ltd 2011

# 1.0 Introduction

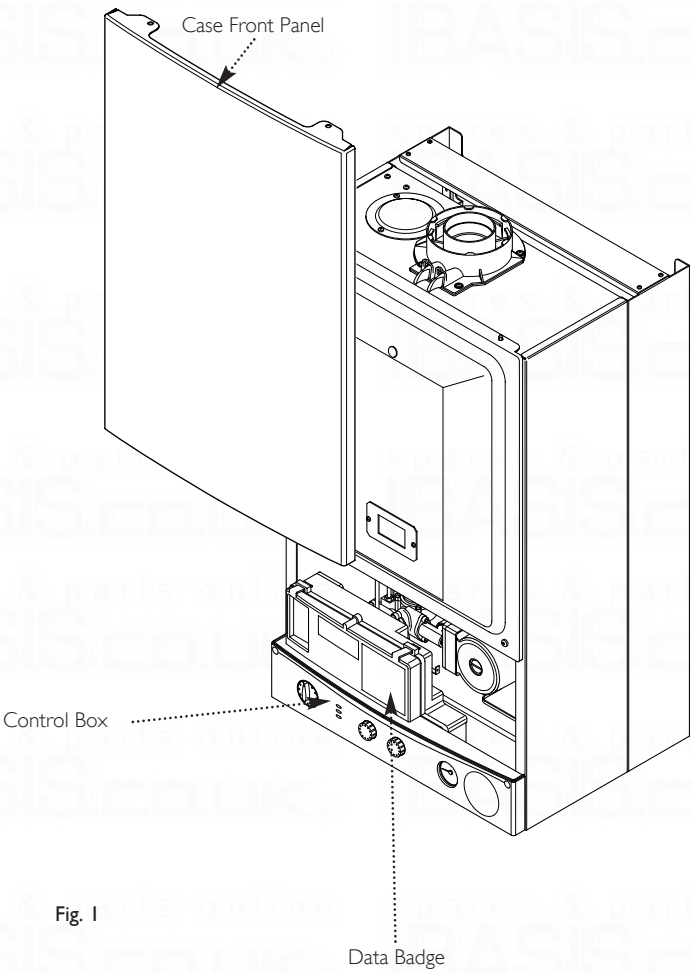


Fig. 1

## 1.1 Description

1. The Potterton Performa 24 Eco HE is a fully automatic gas fired wall mounted condensing combination boiler. It is room sealed and fan assisted, and will serve central heating and mains fed domestic hot water.

2. The boiler is set to give a maximum output of 25.2 kW (condensing).

3. It is designed for use on Natural Gas (G20) and can be converted to use Propane.

4. The boiler is suitable for use only on fully pumped sealed heating systems. Priority is given to domestic hot water.

5. The boiler data badge gives details of the model, serial number and Gas Council number and is situated on the control box. It is visible when the case front panel is removed (Fig. 1).

6. The boiler is intended to be installed in residential / commercial / light industrial E.M.C. environments on a governed meter supply only.

7. The boiler must be installed with one of the purpose designed flues such as the standard horizontal flue kit, part no. 5118489.

8. **All systems must be thoroughly flushed and treated with inhibitor (see section 6.2).**

## 1.2 Contents of Pack

The pack contains:-

- Boiler
- Wall Plate (inc. taps)
- Set of Connections
- Template
- Literature Pack


© Baxi Heating UK Ltd 2011

# 2.0 General Layout

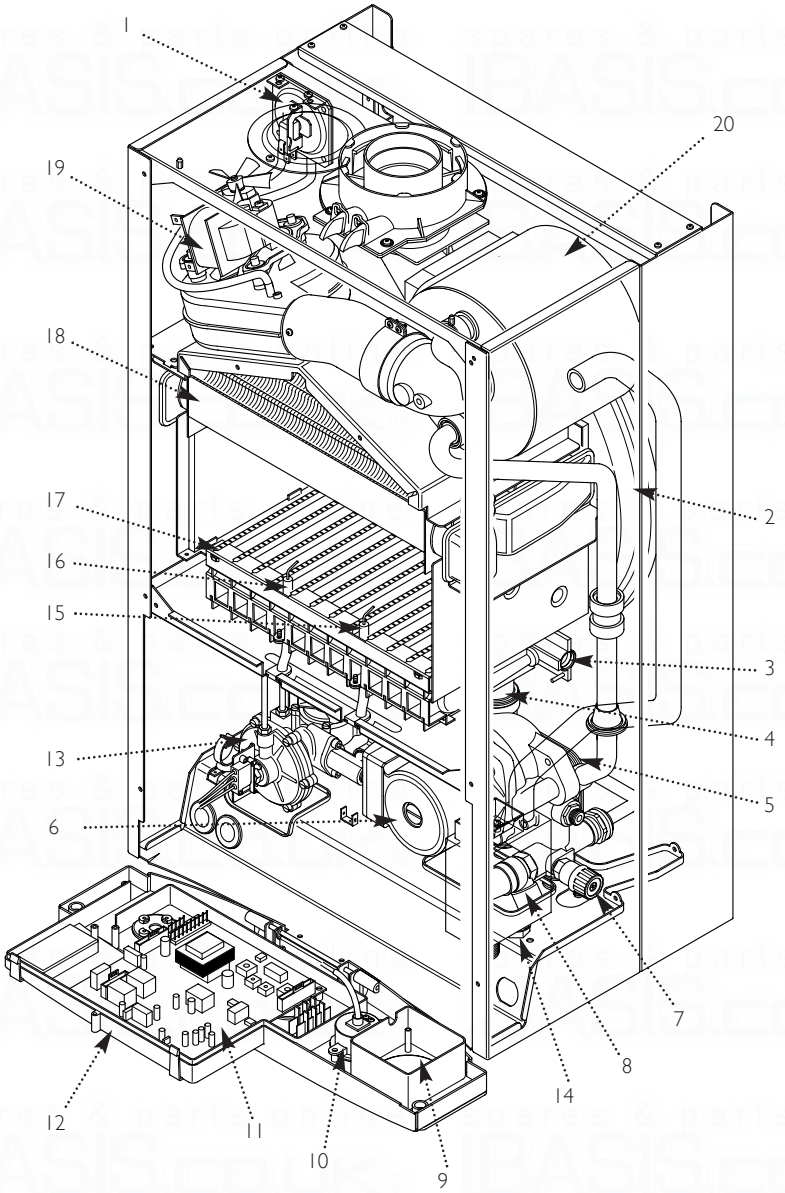


## 2.1 Layout

1. Air Pressure Switch
2. Expansion Vessel
3. Burner Manifold
4. Automatic Air Vent
5. DHW Plate Heat Exchanger
6. Circulation Pump
7. Drain Off Point
8. Safety Pressure Relief Valve
9. Optional Integral Timer Position
10. Central Heating System Pressure Gauge
11. Control PCB
12. Control Box
13. 3-Way Valve Assembly
14. Condensate Trap
15. Flame Sensing Electrode
16. Spark Electrode
17. Burner
18. Primary Heat Exchanger
19. Fan Assembly
20. Secondary Heat Exchanger
21. On/Off/Reset Selector Switch
22. Burner & Fault Indicator Neon
23. Power Neon
24. Flame Failure & Fault Indicator Neon
25. Central Heating Temperature Control
26. Hot Water Temperature Control

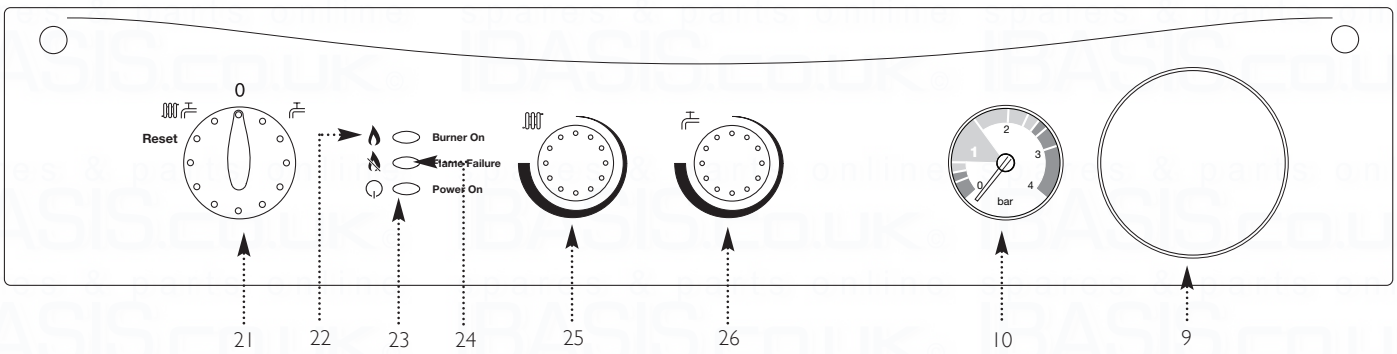


© Baxi Heating UK Ltd 2011

Central Heating Circuit

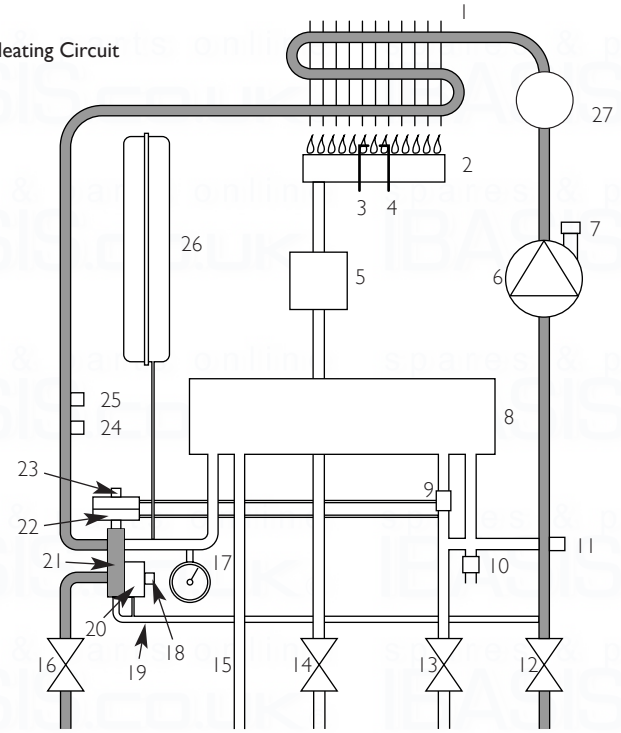


Fig. 2

Key

1 Primary Heat Exchanger
2 Burner
3 Ignition Electrode
4 Flame Sensing Electrode
5 Gas Valve
6 Pump
7 Automatic Air Vent
8 Plate Heat Exchanger
9 Flow Sensor with Filter
10 Pressure Relief Valve
11 Boiler Drain Point
12 Heating Return
13 Cold Water Inlet On/Off Valve and Filter
14 Gas Inlet
15 Domestic Hot Water Outlet
16 Heating Flow
17 Pressure Gauge
18 Hydraulic Differential Pressure Sensor Microswitch
19 Automatic By-Pass
20 Hydraulic Differential Pressure Sensor
21 Diverter Valve Assembly
22 Domestic Hot Water Flow Priority Assembly
23 Domestic Hot Water Flow Priority Microswitch
24 Safety Thermostat
25 Central Heating Temperature Sensor
26 Expansion Vessel
27 Secondary Heat Exchanger

Domestic Hot Water Circuit

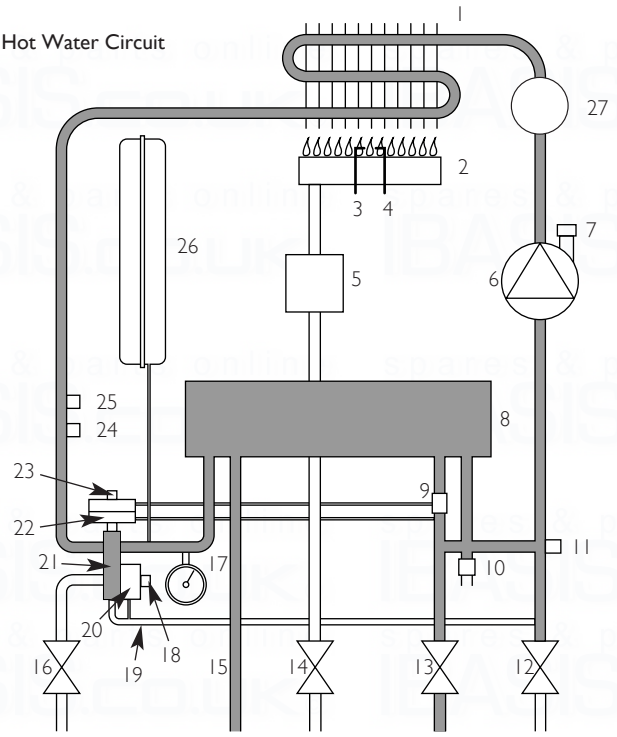


Fig. 3

## 3.0 Appliance Operation

NOTE: All delay timers mentioned in 3.1 and 3.2 are overridden by domestic hot water demand.

### 3.1 Central Heating Mode (Fig. 2)

1. With a demand for heating, the pump circulates water through the primary circuit. At a pre-determined flow rate the central heating flow switch operates, initiating the ignition sequence.

2. The main burner ignites at low rate, then the gas valve controls the gas rate to maintain the heating temperature measured by the temperature sensor.

3. When the flow temperature exceeds the setting temperature, a 3 minute delay occurs before the burner relights automatically (anti-cycling). The pump continues to run during this period.

### 3.2 Domestic Hot Water Mode (Fig. 3)

1. Priority is given to the domestic hot water supply. A demand at a tap or shower will override any central heating requirement.

2. The flow of water will operate the DHW flow switch which requests the 3 way valve to change position. This will allow the pump to circulate the primary water through the DHW plate heat exchanger.

3. The burner will light automatically and the temperature of the domestic hot water is controlled by the temperature sensor.

4. When the domestic hot water demand ceases the burner will extinguish and the diverter valve will remain in the domestic hot water mode, unless there is a demand for central heating.

IMPORTANT: When the selector switch is in the '0' (Off) position the electrical supply to the boiler is isolated. The boiler will not operate and the integral timer (if fitted) will require resetting once the selector switch is turned to either the DHW or CH position.


© Baxi Heating UK Ltd 2011

| Appliance Type | $C_{12}$ | $C_{32}$ | $C_{52}$ |
|---|---|---|---|
| Appliance Category | CAT II $_{2H\ 3P}$ | | |

**Heat Input CH**

| | Max | Min |
|---|---|---|
| kW | 24.8 | 10.6 |

**Heat Output CH (Non-Condensing)**

| | Max | Min |
|---|---|---|
| kW | 24 | 9.8 |

**Heat Output CH (Condensing)**

| | Max | Min |
|---|---|---|
| kW | 25.2 | 10.1 |

**Heat Input DHW**

| | Max |
|---|---|
| kW | 24.8 |

**Heat Output DHW**

| | Max |
|---|---|
| kW | 24 |

**Max Gas Rate** (Natural Gas - G20) (After 10 mins)
$m^3/h$ 2.62

**Burner Pressure** (Natural Gas - G20)

| | Max Rate | Min Rate |
|---|---|---|
| mbar | 10.2 ± 0.5 | 2 ± 0.2 |

**Inlet Pressure** (Natural Gas - G20)
mbar 20

**Burner Injector** (Natural Gas - G20)
15 x 1.18mm Diameter

**Electrical Supply** 230V~ $50H_z$
(Appliance must be connected to an earthed supply)

**Power Consumption** 170W

**External Fuse Rating** 3A

**Internal Fuse Rating**
Fuse 2A Fast Blow to BS 4265

| LPG Propane - G31 | | |
|---|---|---|
| Burner Injector 15 x 0.77mm diameter | | |
| Burner Pressure | Max Rate | Min Rate |
| Propane mbar | 21.8 ± 0.5 | 4.4 ± 0.2 |
| Inlet Pressures mbar | 37 | |

**Electrical Protection** IPX4D

**$NO_x$ Class** 3

**Condensate Drain** 1" BSP

**Flue Terminal Dimensions**

| | |
|---|---|
| Diameter | 100mm |
| Projection | 125mm |

| Connections | | copper tails |
|---|---|---|
| Gas Supply | - | 22mm |
| Central Heating Flow | - | 22mm |
| Central Heating Return | - | 22mm |
| Cold Water Mains Inlet | - | 15mm |
| DHW Flow | - | 15mm |
| Pressure Relief Discharge | - | 15mm |

**Outercase Dimensions**

| | | |
|---|---|---|
| Casing Height | - | 780mm |
| Overall Height Inc Flue Elbow | - | 965mm |
| Casing Width | - | 450mm |
| Casing Depth | - | 345mm |

**Clearances**

| | |
|---|---|
| Above Casing | 200 mm Min |
| Below Casing | 200 mm Min |
| Front | 450 mm Min (For Servicing) |
| Front | 5 mm Min (In Operation) |
| L.H. Side | 5 mm Min |
| R.H. Side | 5 mm Min (In Operation) |
| | 20mm Min (See Note*) |

***NOTE: The boiler can be operated with a clearance of 5mm at the right. This is also sufficient for routine maintenance. However a clearance of 20mm is required if it is necessary to remove the secondary heat exchanger. This should be considered when siting the appliance and in the event of any subsequent alterations in the area of installation**

| Weights | kg |
|---|---|
| Packaged Boiler Carton | 50 |
| Installation Lift Weight | 43.5 |

**Central Heating Primary Circuit Pressures**

| | bar |
|---|---|
| Safety Discharge | 3 |
| Max Operating | 2.5 |
| Min Operating | 0.5 |
| Recommend Operating | 1-2 |

**DHW Circuit Pressures**

| | bar |
|---|---|
| Max Operating | 8 |
| Min Operating | 0.2 |
| Min Operating Pressure at 11.1 l/min | 0.9 |

**Flow Rates**

| | l/min |
|---|---|
| DHW Flow Rate @ 30°C Rise | 11.5 |
| DHW Flow Rate @ 35°C Rise | 9.8 |
| Min Working DHW Flow Rate | 2.5 |

**Pump**
Available Head See graph below

**Expansion Vessel** - (For Central Heating only. Integral with appliance)

| | bar |
|---|---|
| Min Pre-charge Pressure | 0.5 |
| | litre |
| Max Capacity of CH System | 125 |
| Primary Water Content of Boiler (unpressurised) | 1.0 |

**Temperatures**
C.H. Flow Temp (adjustable)
35°C to 85°C max (± 5°C)

D.H.W. Flow Temp (adjustable)
35°C to 65°C max (± 5°C) dependent upon flow rate

## Pump - Available Head

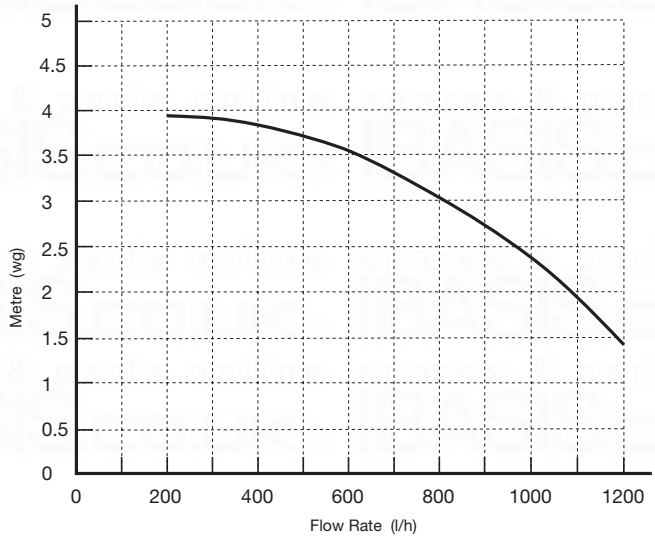


© Baxi Heating UK Ltd 2011

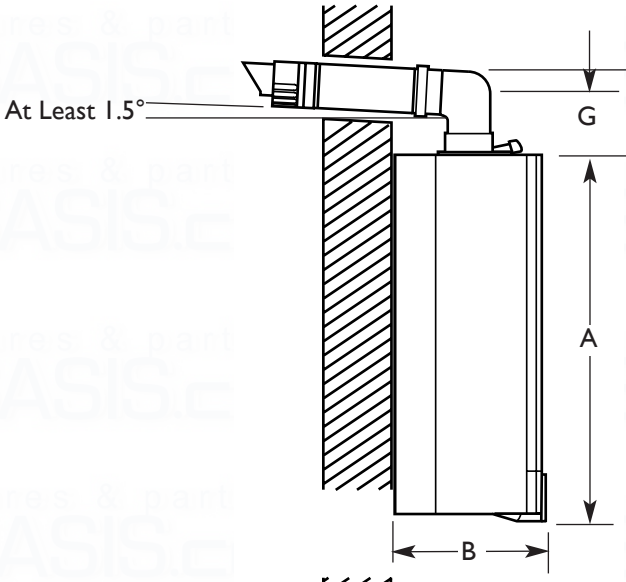


| Dimensions | |
|---|---|
| A | 780mm |
| B | 345mm |
| C | 450mm |
| D | 116mm Ø Min. |
| E | 185mm |
| F | 190mm |
| G | 131mm |

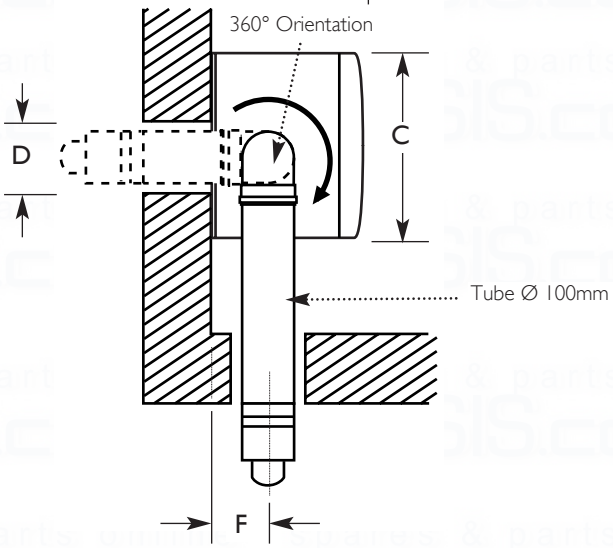


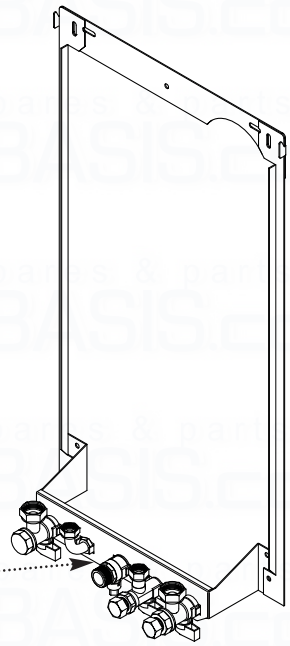

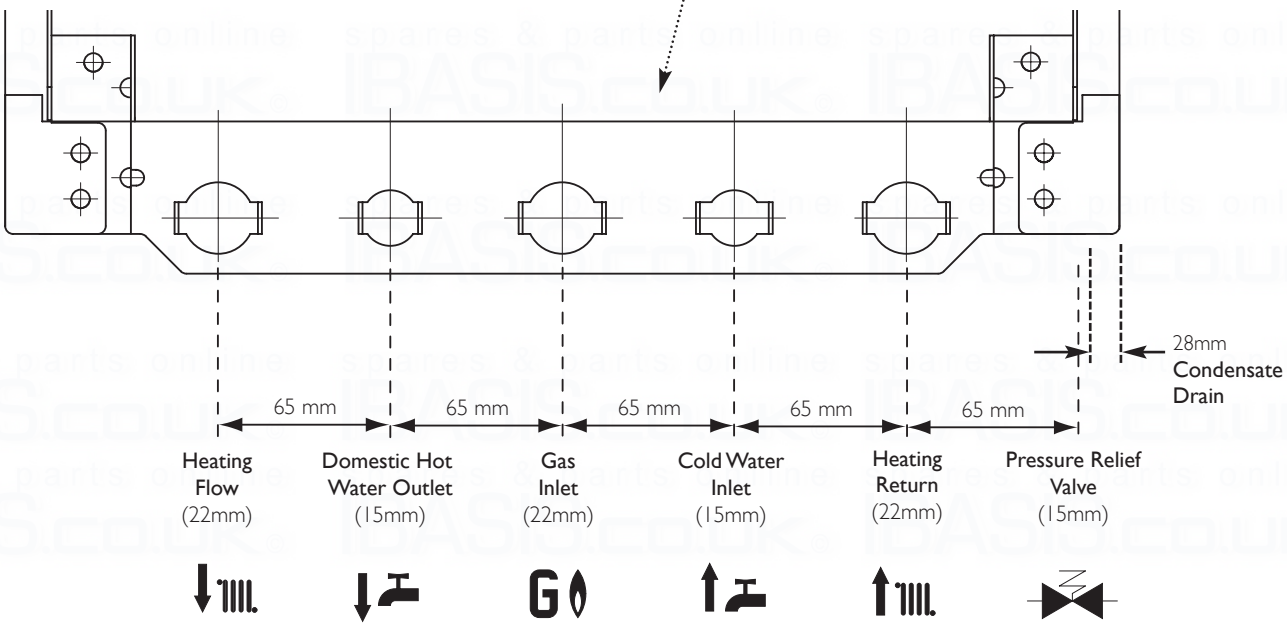


 © Baxi Heating UK Ltd 2011

# 6.0 System Details

## 6.1 Information

1. The Potterton Performa 24 Eco HE Condensing Combination Boiler is 'Water Byelaws Scheme - Approved Products'.
To comply with the Water Byelaws your attention is drawn to the following installation requirements and notes (IRN).

a) IRN 001 - See text of entry for installation requirements and notes.
b) IRN 302 - Byelaw 14.

2. Reference to the WRc publications, 'Water fittings and materials directory' and 'Water supply byelaws guide' give full details of byelaws and the IRNs.

## 6.2 Central Heating Circuit

1. The appliance is suitable for fully pumped SEALED SYSTEMS ONLY.

Treatment of Water Circulating Systems

- All recirculatory water systems will be subject to corrosion unless an appropriate water treatment is applied. This means that the efficiency of the system will deteriorate as corrosion sludge accumulates within the system, risking damage to pump and valves, boiler noise and circulation problems.

- When fitting new systems flux will be evident within the system, which can lead to damage of system components.

- All systems must be thoroughly drained and flushed out. Using, for example Betz-Dearborn Sentinel X300 or X400 or Fernox Superfloc Universal Cleanser. They should be used following the flushing agent manufacturer's instructions.

- System additives - corrosion inhibitors and flushing agents/descalers should comply to BS7593 requirements, e.g. Betz-Dearborn Sentinel X100 and Fernox-Copal which should be used following the inhibitor manufacturer's instructions.

**Failure to flush and add inhibitor to the system will invalidate the appliance warranty.**

- It is important to check the inhibitor concentration after installation, system modification and at every service in accordance with the manufacturer's instructions. (Test kits are available from inhibitor stockists.)

- For information or advice regarding any of the above contact Technical Enquiries.

## 6.3 Bypass

1. The boiler is fitted with an automatic integral bypass.

## 6.4 System Control

1. The boiler is designed for use in a heating system that incorporates external controls, i.e. a minimum of a timer device.

2. Suitable timer kits are available as optional extras.

3. For optimum operating conditions and maximum economy the fitting of a programmable room thermostat is recommended.

© Baxi Heating UK Ltd 2011

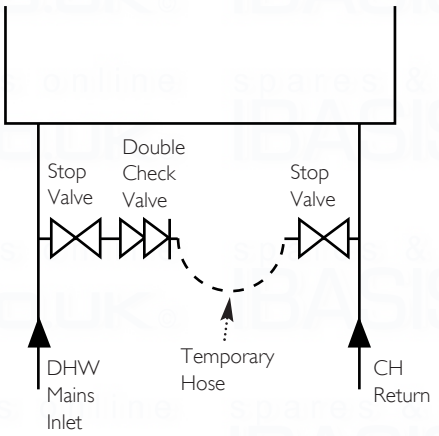


Fig. 4

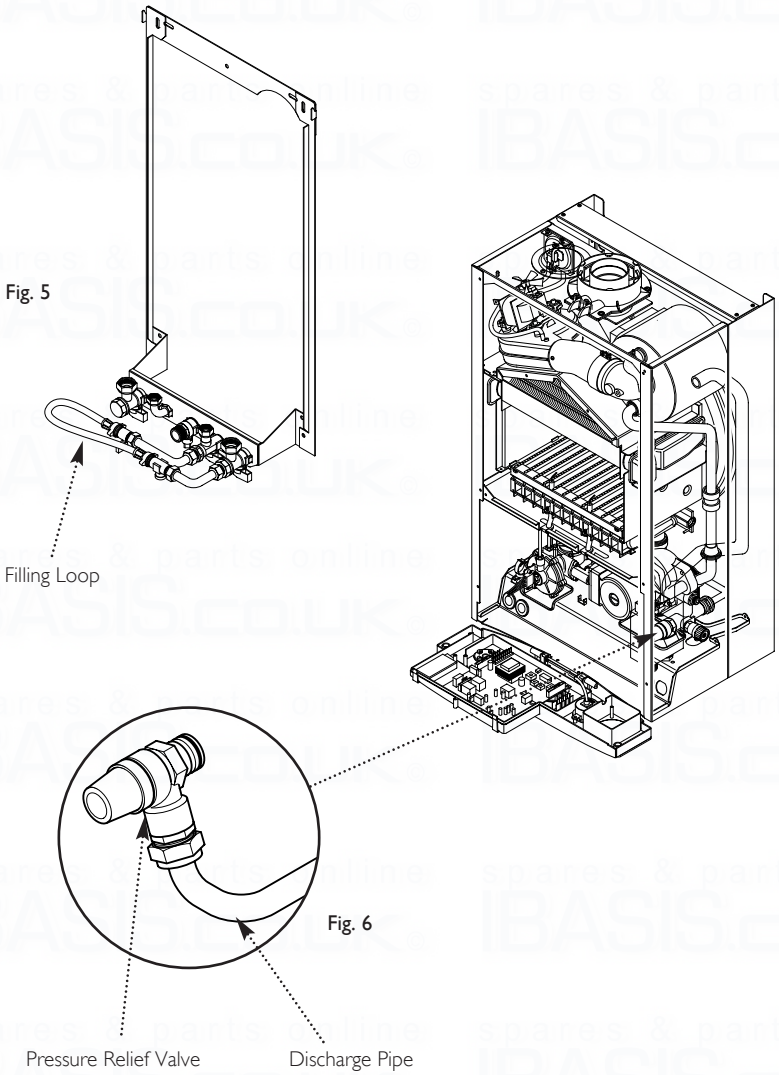


Fig. 5

Fig. 6

## 6.5 System Filling and Pressurising

1. A filling point connection on the central heating return pipework must be provided to facilitate initial filling and pressurising and also any subsequent water loss replacement/refilling.

2. There are connection points on the mains cold water inlet and central heating return isolating taps (Fig. 5) to which the optional filling loop kit (Part No. 248221) can be assembled.

3. The filling method adopted must be in accordance with all relevant water supply regulations and use approved equipment.

4. Your attention is drawn to,
for GB: guidance G24.2 and recommendation R24.2 of the Water Regulations Guide.
for IE: the current edition of I.S. 813. "Domestic Gas Installations".

5. The sealed primary circuits may be filled or replenished by means of a temporary connection between the circuit and a supply pipe provided a 'Listed' double check valve or some other no less effective backflow prevention device is permanently connected at the inlet to the circuit and the temporary connection is removed after use.

## 6.6 Expansion Vessel (Central Heating only)

1. The appliance expansion vessel is pre-charged to 0.5 bar. Therefore, the minimum cold fill pressure is 0.5 bar. The vessel is suitable for correct operation for system capacities up to 125 litres. For greater system capacities an additional expansion vessel must be fitted. For GB refer to BS 7074 Pt 1. For IE, the current edition of I.S. 813 "Domestic Gas Installations".

## 6.7 Safety Pressure Relief Valve (Fig. 6)

1. The pressure relief valve is set at 3 bar, therefore all pipework, fittings, etc. should be suitable for pressures in excess of 3 bar.

2. The pressure relief discharge pipe should be not less than 15mm dia, run continuously downward, and discharge outside the building, preferably over a drain. It should be routed in such a manner that no hazard occurs to occupants or causes damage to wiring or electrical components. The end of the pipe should terminate facing down and towards the wall.

3. The discharge must not be above a window, entrance or other public access. Consideration must be given to the possibility that boiling water/steam could discharge from the pipe.

4. A remote relief valve kit is available to enable the boiler to be installed in cellars or similar locations below outside ground level (kit no. 5121379).

 © Baxi Heating UK Ltd 2011

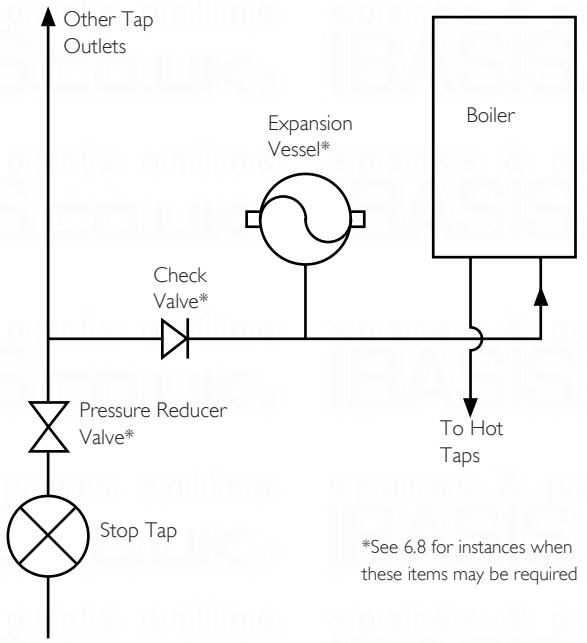


Fig. 7

## 6.8 Domestic Hot Water Circuit (Fig. 7)

1. All DHW circuits, connections, fittings, etc. should be fully in accordance with relevant standards and water supply regulations.

2. Your attention is drawn to:
for GB: Guidance G17 to G24 and recommendation R17 to R24 of the Water Regulations Guide.
for IE: the current edition of I.S. 813. "domestic Gas Installations".

3. The Water Regulations recommendations for England and Wales prohibits backflow from appliances into the wholesome water supply due to thermal expansion. However this type of instantaneous combination boiler, with less than 15 litres of stored capacity, does not require any backflow prevention device as any thermal expansion is accommodated within the appliance.
It is possible in certain circumstances that other cold water demands (e.g. washing machines, flushing of W.C.s) may affect the DHW function of the boiler. In these instances the fitting of a backflow prevention device and expansion vessel is recommended.

4. Also if there is an existing check valve, loose jumpered stop cock, water meter or water treatment device already fitted to the wholesome water supply connected to the boiler domestic hot water (DHW) inlet supply then a suitable expansion device may be required.

5. The boiler's maximum working mains pressure is 8 bar, therefore all pipework, connections, fittings, etc. should be suitable for pressures in excess of 8 bar. A pressure reducing valve must be fitted for pressures in excess of 8 bar. The manufacturer of any outlet fittings, such as a shower valve, may require a lower maximum pressure. The pressure reduction must take account of all fittings connected to the DHW system.

## 6.9 Showers

1. If a shower control is supplied from the appliance it should be of the thermostatic or pressure balanced type. Thermostatic type shower valves provide the best comfort and guard against water at too high a temperature. Existing controls may not be suitable - refer to the shower valve manufacturer.

## 6.10 Hard Water Areas

1. If the area of the installation is recognised as a HARD WATER AREA then a suitable device should be fitted to treat the mains water supply to the boiler. Contact your Water Distribution Company for advice on suitable devices.

© Baxi Heating UK Ltd 2011

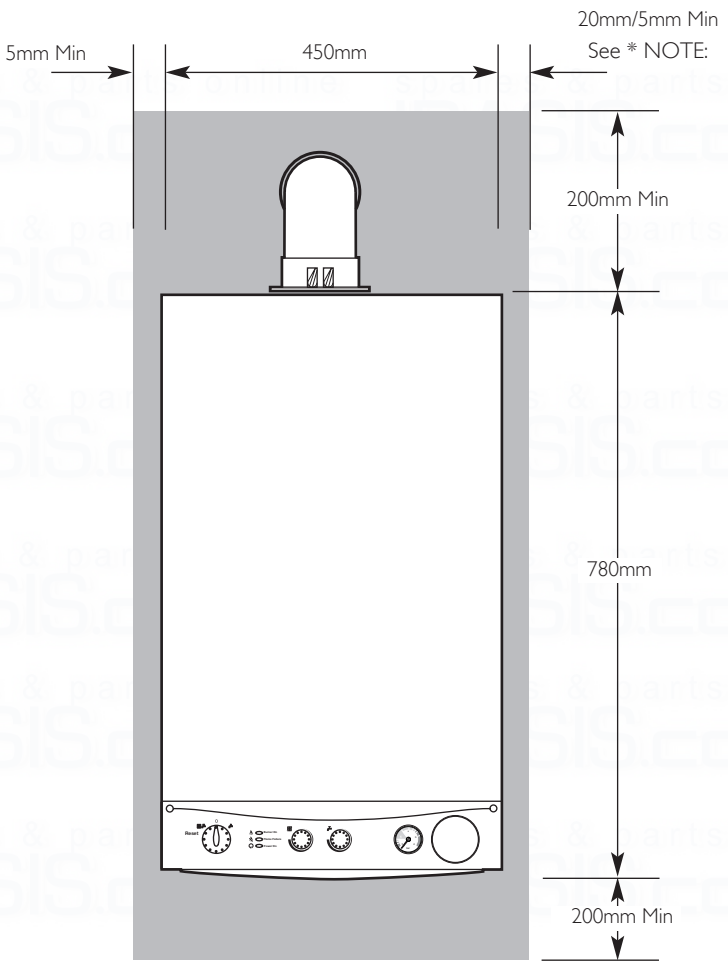


Fig. 8

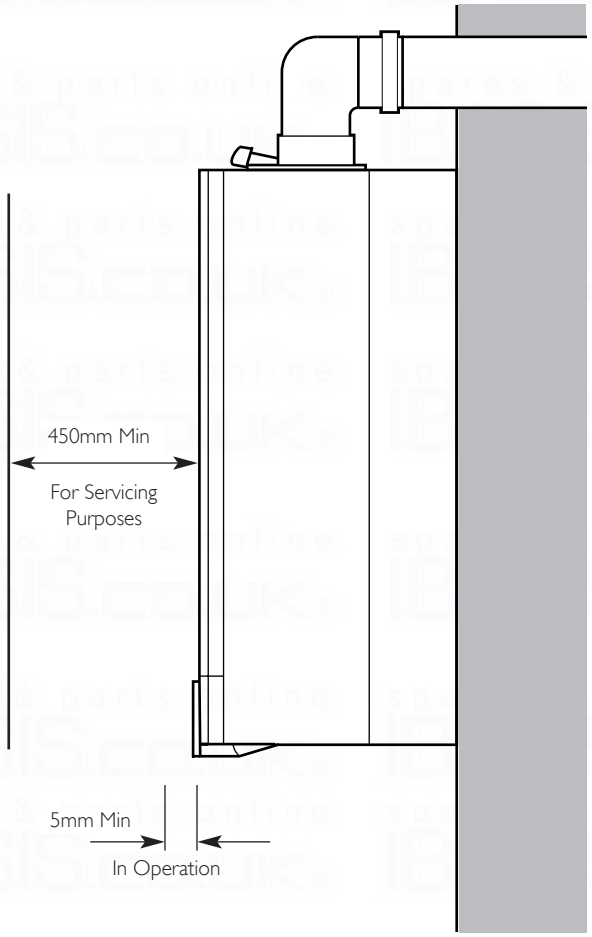


Fig. 9

## 7.0 Site Requirements

### 7.1 Location

1. The boiler may be fitted to any suitable wall with the flue passing through an outside wall or roof and discharging to atmosphere in a position permitting satisfactory removal of combustion products and providing an adequate air supply. The boiler should be fitted within the building unless otherwise protected by a suitable enclosure i.e. garage or outhouse. (The boiler may be fitted inside a cupboard-see Section 7.3).

2. If the boiler is sited in an unheated enclosure then it is recommended to leave the ON/OFF Selector Switch in the domestic hot water and central heating position to give frost protection.

3. If the boiler is fitted in a room containing a bath or shower reference must be made to the relevant requirements.
In GB this is the current I.E.E. Wiring Regulations and Building Regulations.
In IE reference should be made to the current edition of I.S. 813 "Domestic Gas Installations" and the current ETCI rules.

4. If the boiler is to be fitted into a building of timber frame construction then reference must be made to the current edition of Institute of Gas Engineers Publication IGE/UP/7 (Gas Installations in Timber Framed Housing).

### 7.2 Clearances (Figs. 8 & 9)

1. A flat vertical area is required for the installation of the boiler.

2. These dimensions include the necessary clearances around the boiler for case removal, access during routine maintenance and air movement. Additional clearances may be required for the passage of pipes around local obstructions such as joists running parallel to the front face of the boiler.

*** NOTE: The boiler can be operated with a clearance of 5mm at the right. This is also sufficient for routine maintenance. However a clearance of 20mm is required if it is necessary to remove the secondary heat exchanger. This should be considered when siting the appliance and in the event of any subsequent alteration in the area of installation.**

 © Baxi Heating UK Ltd 2011

## 7.3 Ventilation of Compartments

1. Where the appliance is installed in a cupboard or compartment, no air vents are required.

2. BS 5440: Part 2 Clause 4.2 refers to room sealed appliances installed in compartments. The appliance will run sufficiently cool without ventilation.

## 7.4 Gas Supply

1. The gas installation should be in accordance with the relevant standards. In GB this is BS 6891. In IE this is the current edition of I.S. 813 "Domestic Gas Installations".

2. The connection to the appliance is a 22mm copper tail located at the rear of the gas service cock (Fig. 10).

3. Ensure that the pipework from the meter to the appliance is of adequate size. Do not use pipes of a smaller diameter than the boiler gas connection (22mm).

## 7.5 Electrical Supply

1. External wiring must be correctly earthed, polarised and in accordance with relevant regulations/rules. In GB this is the current I.E.e. Wiring Regulations. In IE reference should be made to the current edition of ETCI rules.

2. The mains supply is 230V ~ 50$H_z$ fused at 3A.

**NOTE: The method of connection to the electricity supply must facilitate complete electrical isolation of the appliance.**

**Connection may be via a fused double-pole isolator with a contact separation of at least 3mm in all poles and servicing the boiler and system controls only.**

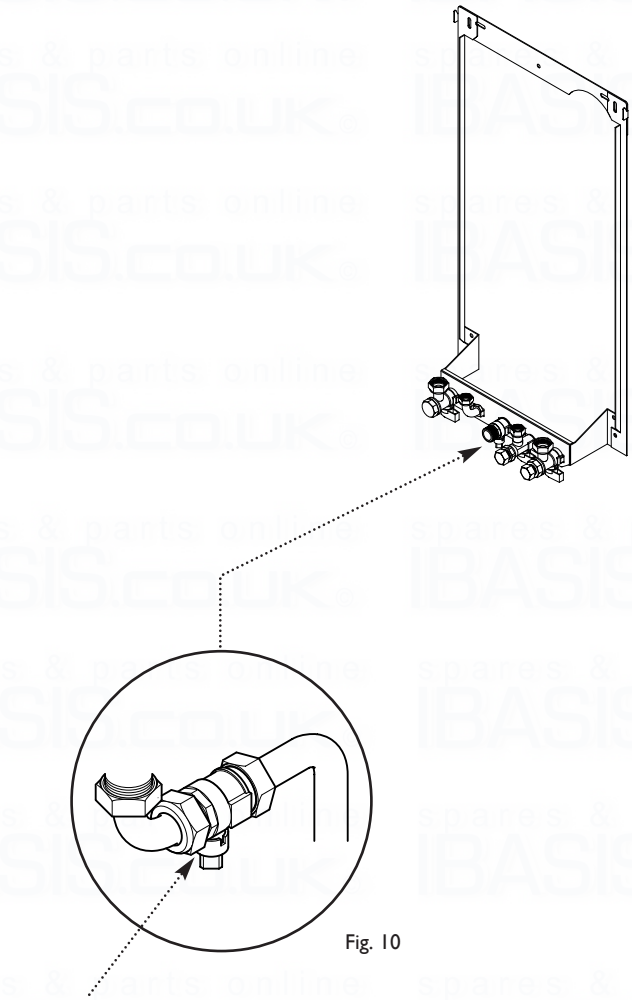


Fig. 10

© Baxi Heating UK Ltd 2011

Termination to an internal soil and vent pipe

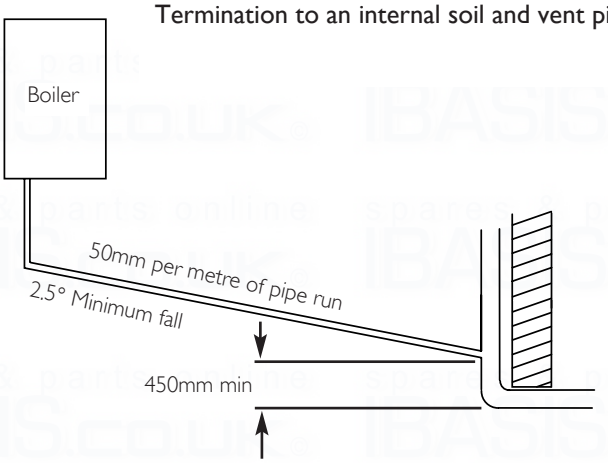


External termination via internal discharge branch e.g sink waste - downstream

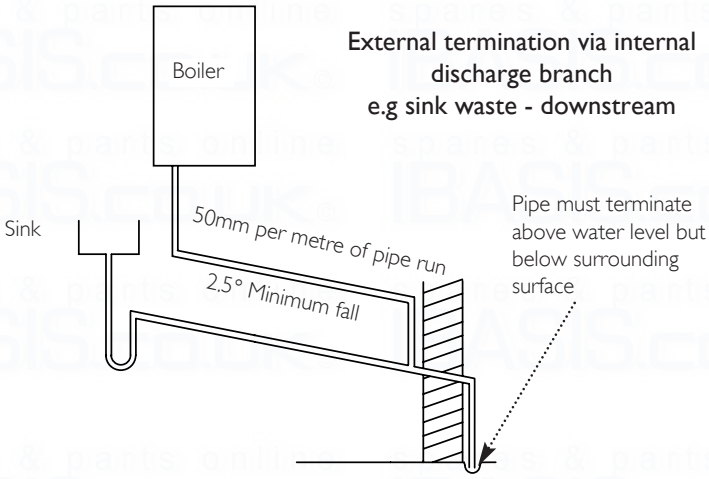


External termination to a drain or gully

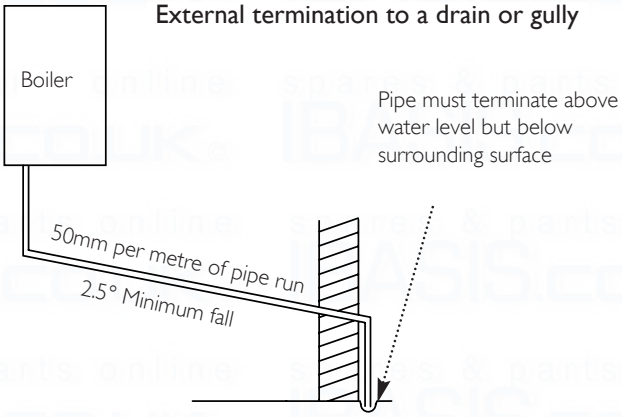


External termination to a purpose made soak-away

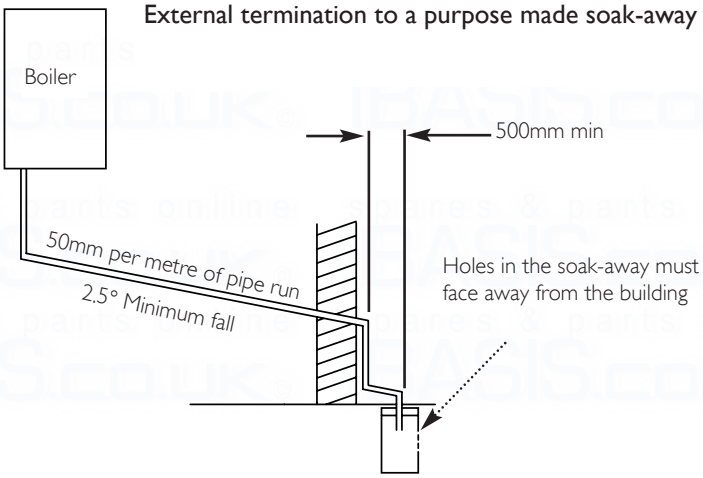


## 7.0 Site Requirements

### 7.6 Condensate Drain

**FAILURE TO INSTALL THE CONDENSATE DISCHARGE PIPEWORK CORRECTLY WILL AFFECT THE RELIABLE OPERATION OF THE BOILER**

**The condensate discharge pipe MUST NOT RISE at any point along its length. There MUST be a fall of AT LEAST 2.5° (50mm per metre) along the entire run.**

1. The condensate outlet terminates in a 1" BSP nut and seal for the connection of 21.5mm (3/4in) plastic overflow pipe which should generally discharge internally into the household drainage system. If this is not possible, discharge into an outside drain is acceptable.

2. Ensure the discharge of condensate complies with any national or local regulations in force.
**BS 6798:2000 & Part H1 of the Building Regulations give further guidance.**

3. The discharge pipe should be run in a proprietary drain pipe material e.g. PVC, PVC-U, ABS, PVC-C or PP.

4. Metal pipework is NOT suitable for use in condensate discharge systems.

5. The pipe should be a minimum of 21.5mm diameter and must be supported using suitably spaced clips to prevent sagging.

6. **It is advisable to keep the condensate pipe internal.**

7. **External runs greater than 3 metres or runs in cold areas should use 32mm waste pipe.**

8. If the boiler is fitted in an unheated location the entire condensate discharge pipe should be treated as an external run.

9. In all cases discharge pipe must be installed to aid disposal of the condensate. To reduce the risk of condensate being trapped, as few bends and fittings as possible should be used.

10. When discharging condensate into a soil stack or waste pipe the effects of existing plumbing must be considered. If soil pipes or waste pipes are subjected to internal pressure fluctuations when WC's are flushed or sinks emptied then back-pressure may force water out of the boiler trap and cause appliance lockout.

Examples are shown of the following methods of termination:-
i) to an internal soil & vent pipe
ii) via an internal discharge branch (e.g. sink waste)
iii) to a drain or gully
iv) to a purpose made soakaway

 © Baxi Heating UK Ltd 2011

| | Terminal Position with Minimum Distance (Fig. 11) | (mm) |
|---|---|---|
| A[1] | Directly below an opening, air brick, opening windows, etc. | 300 |
| B[1] | Above an opening, air brick, opening window etc. | 300 |
| C[1] | Horizontally to an opening, air brick, opening window etc. | 300 |
| D[2] | Below gutters, soil pipes or drain pipes. | 25 |
| E[2] | Below eaves. | 25 |
| F[2] | Below balconies or car port roof. | 25 |
| G[2] | From a vertical drain pipe or soil pipe. | 25 |
| H[2] | From an internal or external corner. | 25 |
| I | Above ground, roof or balcony level. | 300 |
| J | From a surface or boundary line facing a terminal. | 600 |
| K | From a terminal facing a terminal (Horizontal flue). | 1200 |
| | From a terminal facing a terminal (Vertical flue). | 600 |
| L | From an opening in carport (e.g. door, window) into the dwelling. | 1200 |
| M | Vertically from a terminal on the same wall. | 1500 |
| N | Horizontally from a terminal on the same wall. | 300 |
| R | From adjacent wall to flue (vertical only). | 300 |
| S | From an adjacent opening window (vertical only). | 1000 |
| T | Adjacent to windows or openings on pitched and flat roofs | 600 |
| U | Below windows or openings on pitched roofs | 2000 |

[1] In addition, the terminal should be no nearer than 150 mm to an opening in the building fabric formed for the purpose of accommodating a built-in element such as a window frame.

[2] Only **ONE** 25mm clearance is allowed per installation. If one of the dimensions D, E, F, G or H is 25mm then the remainder **MUST** be as B.S.5440-1.

**NOTE:** The distance from a fanned draught appliance terminal installed parallel to a boundary may not be less than 300mm in accordance with the diagram below

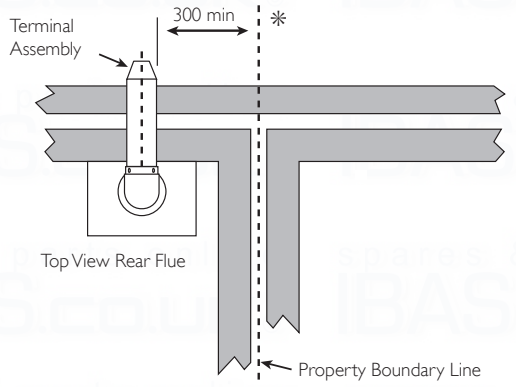


Fig. 12

## 7.0 Site Requirements

### 7.7 Flue

**NOTE:** Due to the nature of the boiler a plume of water vapour will be discharged from the flue. This should be taken into account when siting the flue terminal.

1. The following guidelines indicate the general requirements for siting balanced flue terminals. For GB recommendations are given in BS 5440 Pt 1. For IE recommendations are given in the current edition of I.S. 813 "Domestic Gas Installations".

2. If the terminal discharges onto a pathway or passageway, check that combustion products will not cause a nuisance and that the terminal will not obstruct the passageway.

3. If a terminal is less than 2 metres above a balcony, above ground or above a flat roof to which people have access, then a suitable terminal guard must be provided.

4. * Reduction to the boundary is possible down to 25mm but the flue deflector kit (part no. 5111068) must be fitted.

**IMPORTANT:**
- Only **ONE** 25mm clearance is allowed per installation.
- Under car ports we recommend the use of the plume displacement kit.
- The terminal position must ensure the safe and nuisance - free dispersal of combustion products.

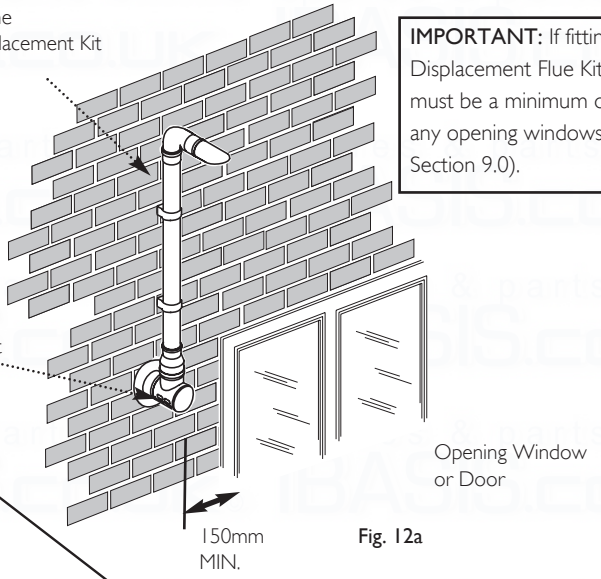


Fig. 12a

**IMPORTANT:** If fitting a Plume Displacement Flue Kit, the air inlet must be a minimum of 150mm from any opening windows or doors (see Section 9.0).

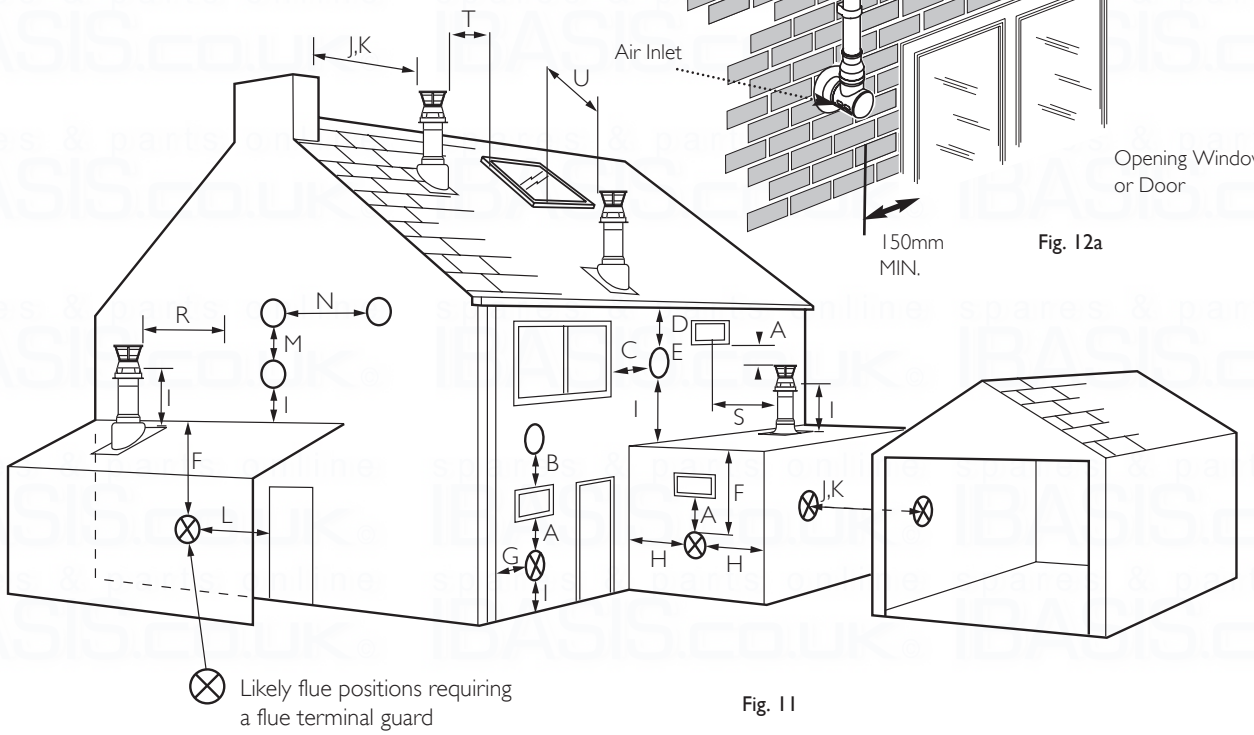


Fig. 11

© Baxi Heating UK Ltd 2011

# 8.0 Flue Options

## 8.1 Horizontal Flue Systems

1. The standard flue is suitable only for horizontal termination applications.

2. All fittings should be fully engaged. The approximate engagement is 40mm. Apply soap solution to the seal on each fitting to aid assembly.

3. Maximum permissible equivalent flue lengths are:-

Horizontal Concentric 4 metres

4. Any additional "in line" bends in the flue system must be taken into consideration.
Their equivalent lengths are:-
Concentric Pipes:

| | |
|---|---|
| 135° bend | 0.5 metres |
| 93° bend | 1.0 metres |

Twin Flue Pipe

| | |
|---|---|
| 135° bend | 0.25 metres |
| 91.5° bend | 0.50 metres |

The elbow supplied with the standard horizontal telescopic flue kit is not included in any equivalent length calculations

**NOTE:** Flue length is measured from point X to Y as shown.

**IMPORTANT: All flue systems must be securely supported at least once every metre. Suitable pipe supports are available as accessories.**

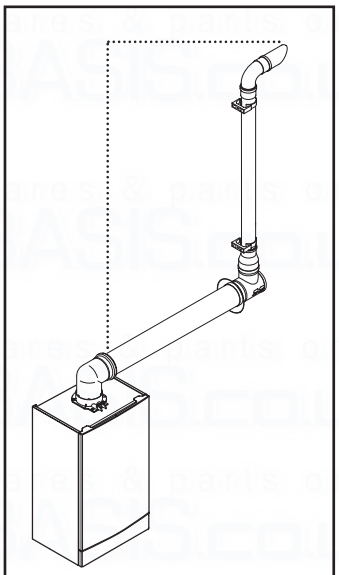

Plume Displacement Kit 60 /100 Ø
1M Extensions, 45° & 93° bends are also available - see Section 9.0

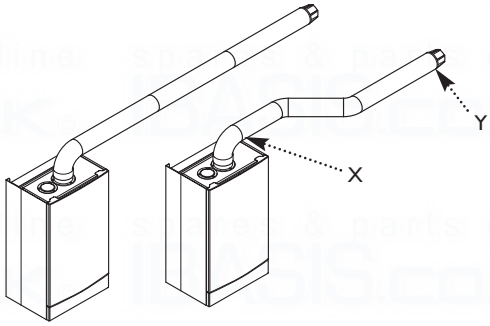


Horizontal Flues

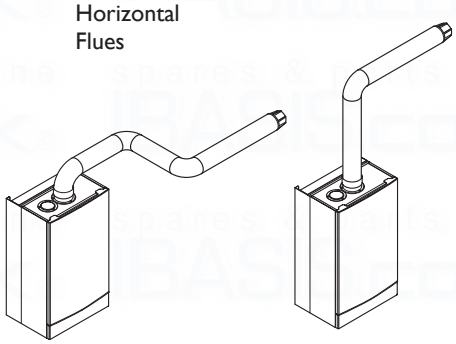

**NOTE:** Horizontal flue pipes should always be installed with a 1.5° fall from the terminal to allow condensate to run back to the boiler.

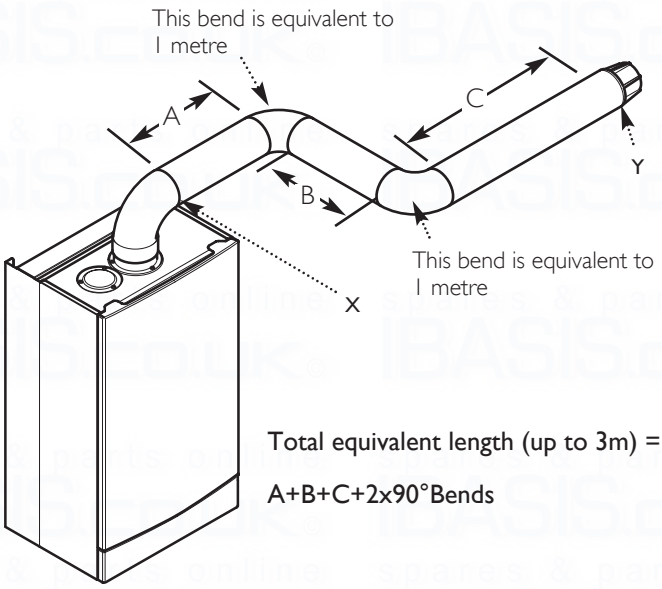


Total equivalent length (up to 3m) =

A+B+C+2x90°Bends

 © Baxi Heating UK Ltd 2011

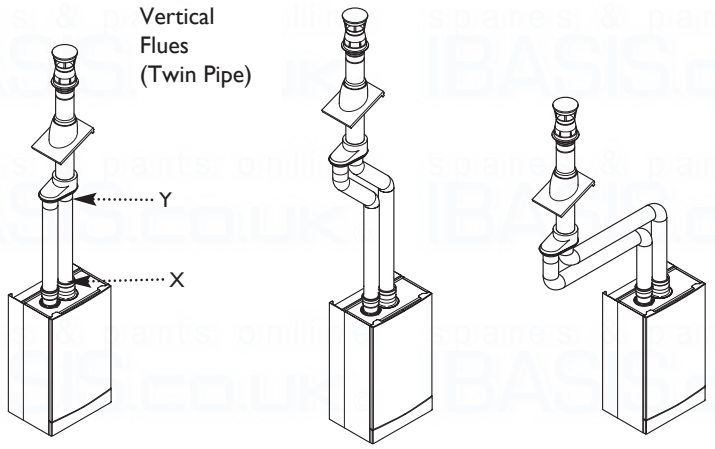


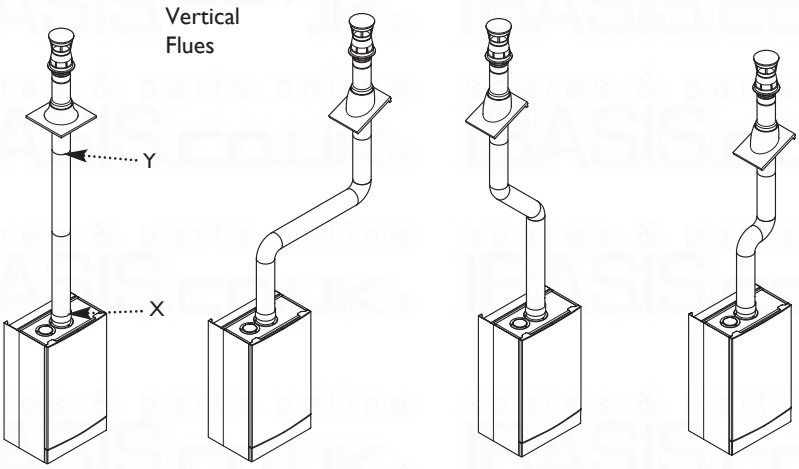


## 8.2 Twin & Vertical Flue Systems

1. Maximum permissible equivalent flue lengths are:-

| | |
|---|---|
| Vertical Concentric | 4m |
| Vertical Twin Pipe | 12m* |

*** Both the air and flue duct can be up to 12 metres long each.**

2. Any additional "in line" bends in the flue system must be taken into consideration. Their equivalent lengths are:-

Concentric Pipes:

| | |
|---|---|
| 45° bend | 0.5 metres |
| 93° bend | 1.0 metres |

Twin Flue Pipe

| | |
|---|---|
| 45° bend | 0.25 metres |
| 91.5° bend | 0.50 metres |

The elbow supplied with the standard horizontal flue is not included in any equivalent length calculations

**NOTE: Flue length is measured from point X to Y as shown.**

**IMPORTANT: All flue systems must be securely supported at least once every metre. Suitable pipe supports are available as accessories.**

**Total Equivalent Length = A+B+C+1x90°Bend**

All vertical and angled runs must be included, measured from the boiler adaptor (point X) to the joint with the flue terminal (point Y). One 91.5° bend or two 135° bends can be included without reduction of the flue length.

**If further elbows are required the flue length must be reduced by the following amounts:-**

1 metre for each 91.5° bend
0.5 metre for each 135° bend

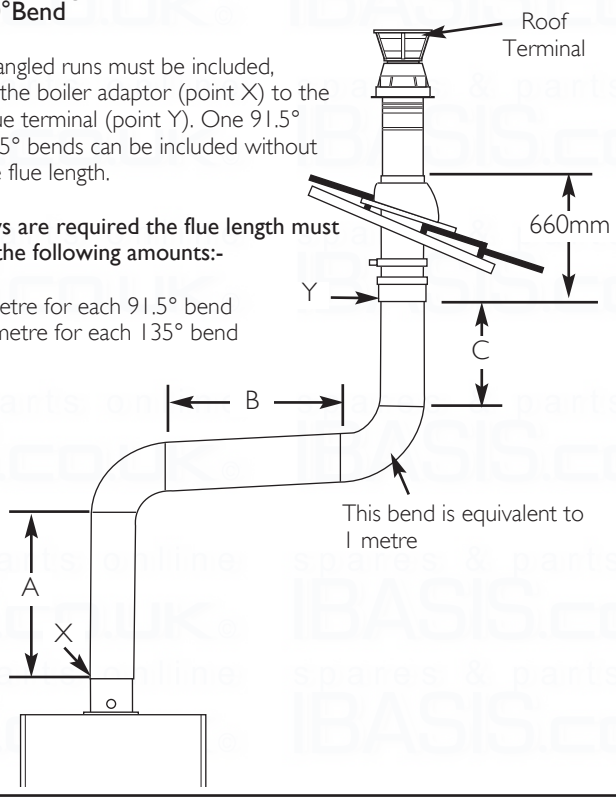


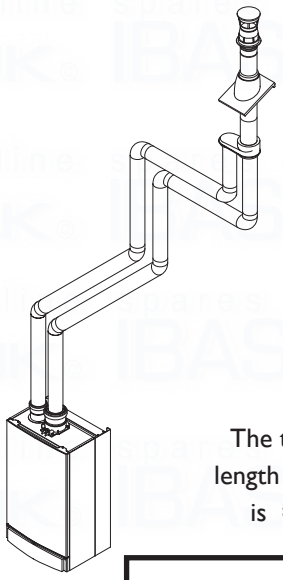

The total equivalent length for this example is = 6.5 metres.

| | AIR DUCT | | |
|---|---|---|---|
| | Equivalent Length Value | N° of fittings/pipes | Sub total |
| 1m extension | 1m | 5 | 5.0m |
| 45°bend | 0.25m | 2 | 0.5m |
| 91.5°bend | 0.5m | 2 | 1.0m |
| | Equivalent Length Air Duct = **6.5m** | | |

| | FLUE DUCT | | |
|---|---|---|---|
| | Equivalent Length Value | N° of fittings/pipes | Sub total |
| 1m extension | 1m | 5 | 5.0m |
| 45°bend | 0.25m | 2 | 0.5m |
| 91.5°bend | 0.5m | 2 | 1.0m |
| | Equivalent Length Flue Duct = **6.5m** | | |

© Baxi Heating UK Ltd 2011

## 8.3 Flue Accessories

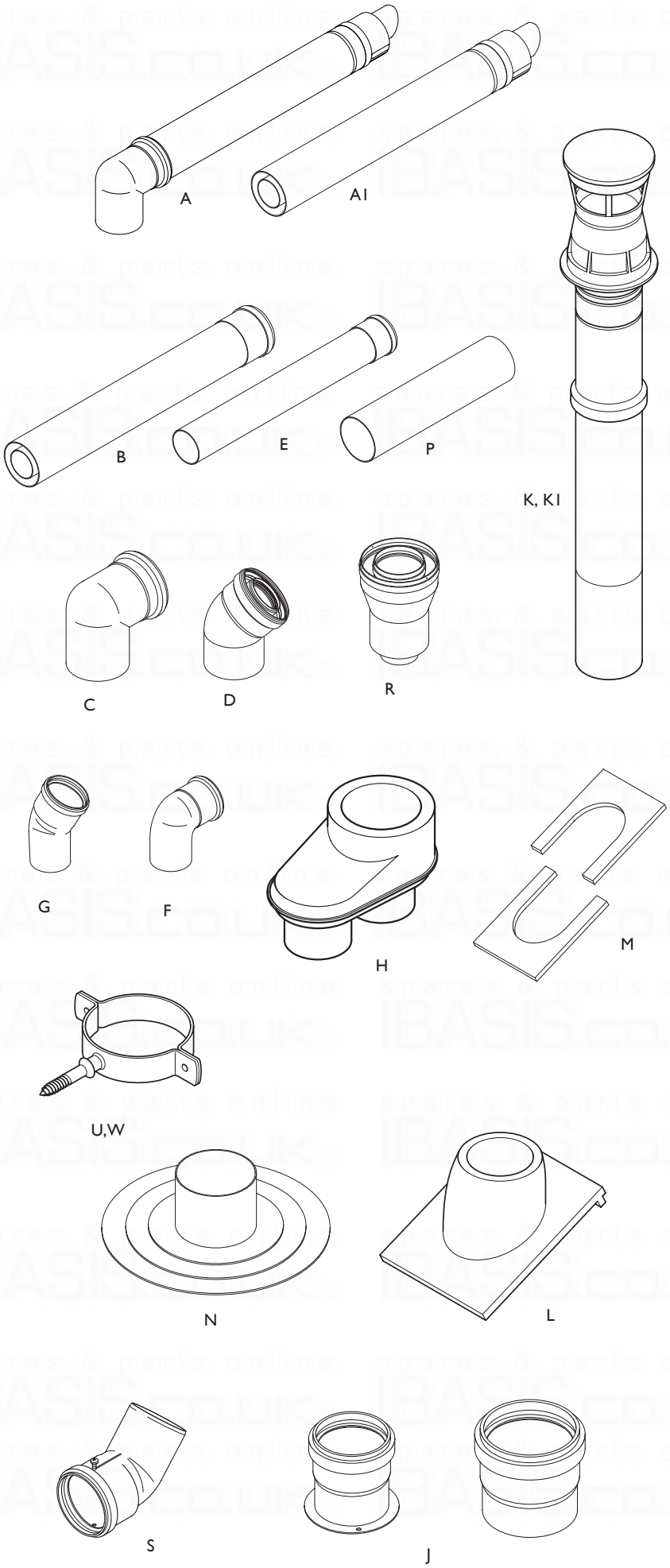


| Key | Accessory | Size | Code No |
|---|---|---|---|
| **FLUE GROUP A** | | | |
| **Concentric Flue System 100mm diameter** | | | |
| A1 | Horizontal Flue Terminal | | 5111073 |
| A | Horizontal Flue Terminal (incl elbow) | | 5118489 |
| B | Flue Extension | 1000mm | 5111074 |
| C | Flue Bend | 93° | 5111075 |
| D | Flue Bend (pair) | 135° | 5111085 |
| U | Pipe Support (painted) | 100mmØ | 5111080 |
| R | Vertical Flue Adaptor | | 5111070 |
| P | Wall Liner | | 5111067 |
| S | Flue Terminal Deflector | | 5111068 |
| **FLUE GROUP N** | | | |
| **Twin Flue System 80mm diameter** | | | |
| E | Flue Extension (pair) | 1000mm | 5111087 |
| F | Flue Bend (pair) | 90° | 5111072 |
| G | Flue Bend (2 pair) | 135° | 5111086 |
| J | Vertical Flue Boiler Adaptor Kit | | 5111079 |
| H | Vertical Flue Adaptor | | 5111084 |
| W | Pipe Support (pair) | 80mm | 5111081 |
| **FLUE GROUP A, N, G** | | | |
| **Vertical Flue Kits** | | | |
| K | Vertical Flue Terminal (use with 5111070) | | 5111078 |
| K1 | Vertical Flue Terminal | | 5118576 |
| L | Pitched Roof Flashing | 25°/50° | 5122151 |
| M | Roof Cover Plate | | 246143 |
| N | Flat Roof Flashing | | 246144 |

 © Baxi Heating UK Ltd 2011

# 8.0 Flue Options

For Twin Flue Systems fit the adaptors as follows:-

## 8.4 Flue Duct Adaptor

1. Engage the flue duct adaptor on the boiler adaptor, making sure that it is pushed down as far as possible.

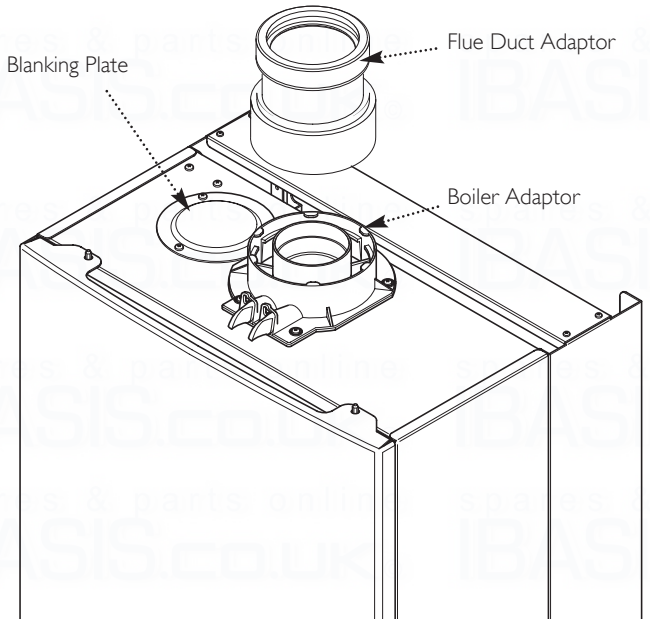


## 8.5 Air duct adaptor

1. Undo the screws securing the blanking plate to the boiler top panel. Discard the plate.

2. There are three restrictor plates supplied in the kit. One marked '23' and one marked '27', these can be discarded **The third restrictor MUST be positioned as shown in the diagram below.**

3. Take one of the gaskets supplied in the kit and place on the boiler top panel.

4. Align the restrictor as shown. Position the second gasket over the restrictor.

5. Using the screws previously removed secure the inlet adaptor to the top panel.

6. Continue to fit the twin flue system.

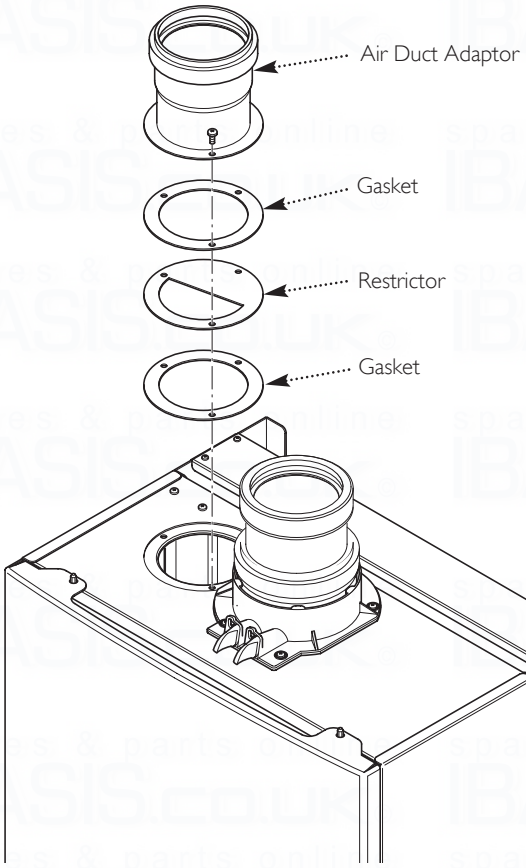


**Position of Restrictor**

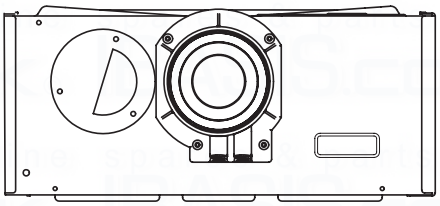

© Baxi Heating UK Ltd 2011

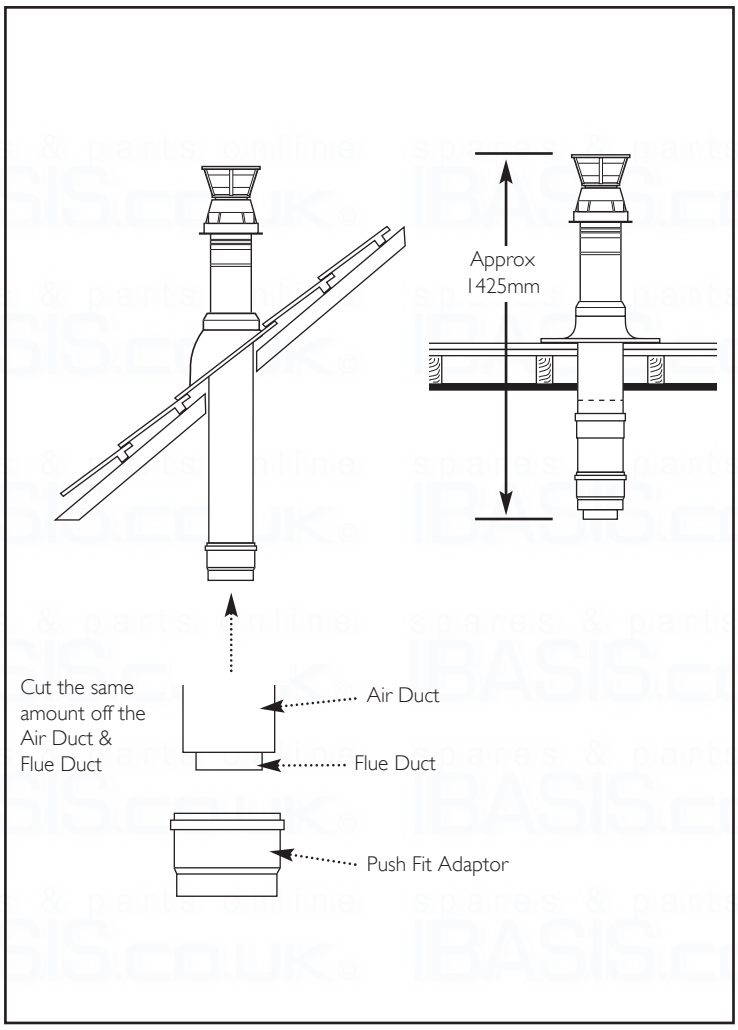


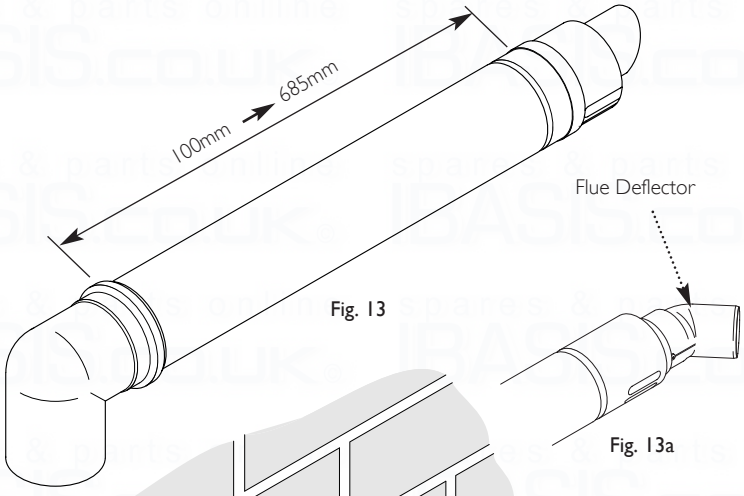


Fig. 13

Fig. 13a

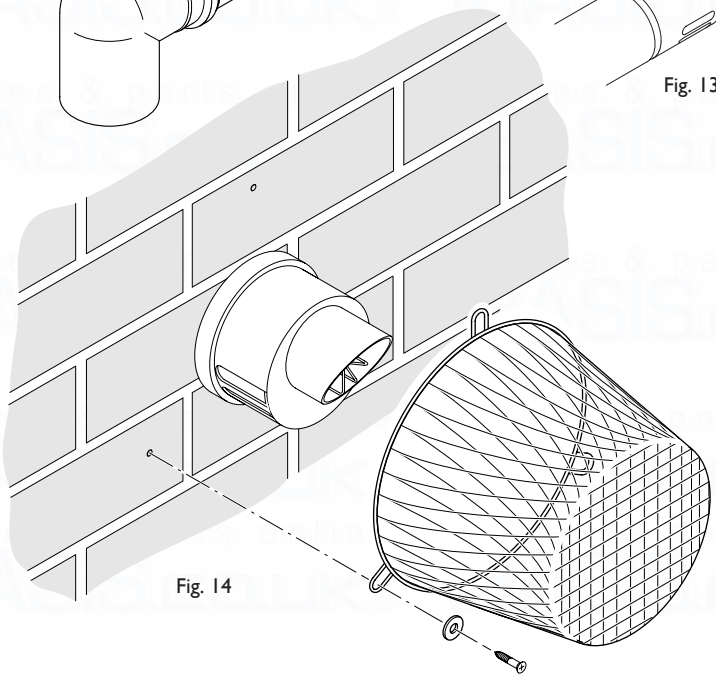

Fig. 14

## 8.0 Flue Options

### 8.6 For Roof Terminals

1. In the case of a pitched roof 25 - 50 degrees, position the lead tile to replace/flash over existing roof tiling. Make an aperture in the roof suitable for the lower tube of the roof terminal and ensure the integrity of the roof cover is maintained. The adjustable plastic collar can either be positioned on the lead tile or the lower tube of the roof terminal prior to the final positioning of the vertical flue through the tile. Check the collar is correctly located to suit required roof pitch (either 25° to 38° or 37° to 50°). From inside the roof adjust the flue to a vertical position and secure to the roof structure with the clamp supplied.

2. For flat roof installations the aluminium flashing must be incorporated into the roof covering and the appropriate aperture made in the roof decking. The vertical flue is lowered onto the flashing making sure the collar of the flue locates securely with the flashing. (A mastic seal may be necessary). From inside the roof, adjust the flue to a vertical position and secure to the roof structure with the clamp supplied.

### 8.7 Flue Dimensions

1. The standard horizontal flue kit allows for flue lengths between 100mm and 685mm from elbow to terminal (Fig. 13).

**The maximum permissible equivalent flue length is: 4 metres**

**NOTE: Each additional 45° of flue bend will account for an equivalent flue length of 0.5m.**
**eg. 45° = 0.5m, 90° = 2 x 45° = 1m etc.**

### 8.8 Flue Trim

1. The rubber flue trim supplied may be fitted to either the outside wall or on the inner wall of installation.

### 8.9 Terminal Guard (Fig. 14)

1. When codes of practice dictate the use of terminal guards, they can be obtained from most Plumbers' and Builders' Merchants.

2. There must be a clearance of at least 50mm between any part of the terminal and the guard.

3. When ordering a terminal guard, quote the appliance name and model number.

4. The flue terminal guard should be positioned centrally over the terminal and fixed as illustrated.

### 8.10 Flue Deflector (Fig. 13a)

1. If required a flue deflector is available from your Potterton stockist.

2. Push the flue deflector over the terminal end and rotate to the optimum angle for deflecting plume. Secure the deflector to the terminal with screws provided.

 © Baxi Heating UK Ltd 2011

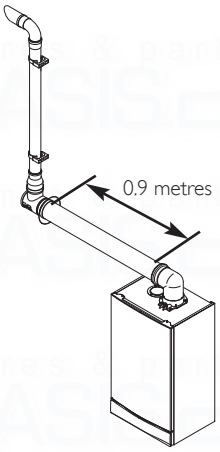


Fig. 14a

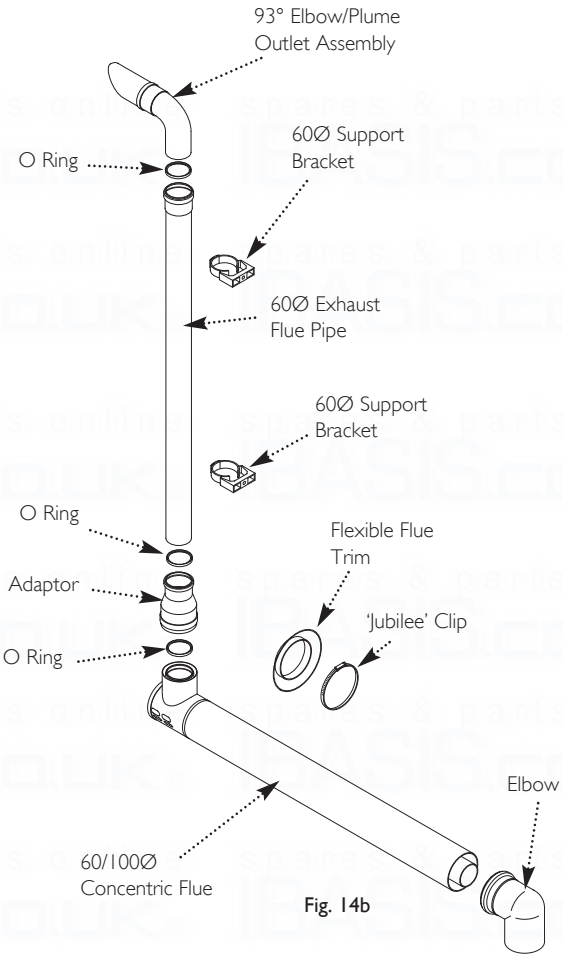


Fig. 14b

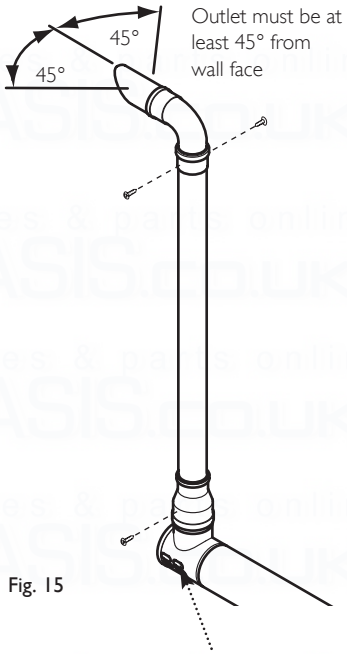


Fig. 15

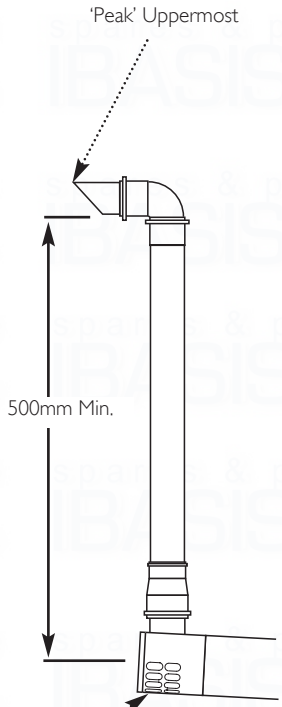


Fig. 16

## 9.0 Plume Displacement

### 9.1 Plume Displacement Kit (Fig. 14b)

**Kit No 5118638**

Content of kit

- 1 0.9m 60/100 Concentric Flue
- 1 1m 60 Dia Exhaust Flue Pipe
- 1 Adaptor
- 2 60 Dia Support Brackets
- 1 93° Elbow/Plume Outlet Assembly
- 1 Flexible Flue Trim
- 3 "O" Rings
- 1 'Jubilee Clip
- 1 Boiler Elbow

1. This kit is recommended for installations where the condensate plume emitted from the flue may cause a nuisance or affect the surroundings.

2. The terminal must be positioned outside the building with the air inlet facing downward and outlet connection upwards.

3. The plume outlet must always be at least 45° to the wall, with the 'peak' uppermost to prevent rain entry (Figs. 15 & 16), and be at least 2 metres above ground level. It must be secured as shown in Fig. 12a. The plume outlet must also be at least 500mm from the air inlet in any direction (Fig. 16).

**NOTE:** The outlet must be positioned so that any condensate plume is directed away from adjacent surfaces. There must be a constant fall along the entire length of the flue system from the outlet back to the boiler.

4. It is possible to reduce or increase (with the addition of extensions) the length of either or both the 60/100 concentric and 60Ø exhaust.

5. Standard concentric flue extension kits may be added between the boiler elbow and the terminal assembly.

6. The minimum length of the concentric flue is 100mm when measured from the edge of the flue elbow.

**IMPORTANT:** The maximum equivalent length of concentric flue is:- **2.5 metres**
Additional bends may be fitted in the concentric flue, but the equivalent length must be reduced by 1 metre (93° bend) or 0.5 metres (45° bend).

7. 60Ø 1 metre extensions (including support bracket), and additional 93° & 45° elbows are available. Any additional 93° & 45° elbows must be accounted for when calculating flue lengths.

**NOTE:** Permitted positions of the plume outlet relative to doors, windows etc. are the same as for conventional concentric flues as detailed in the main Installation & Servicing Instructions and BS5440 Pt. 1. It is **NOT** necessary to fit a terminal guard over the air inlet or the plume outlet.

© Baxi Heating UK Ltd 2011

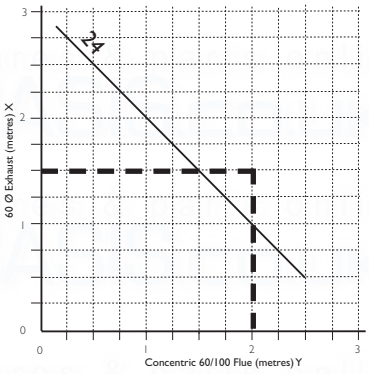


Example 1
Flue Lengths - Not Permissible

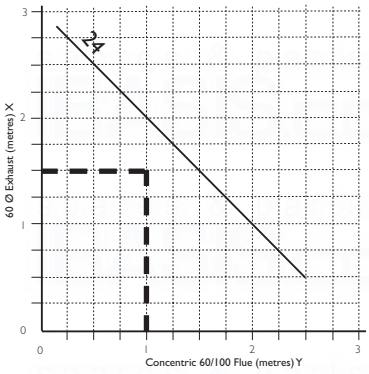


Example 2
Flue Lengths - OK

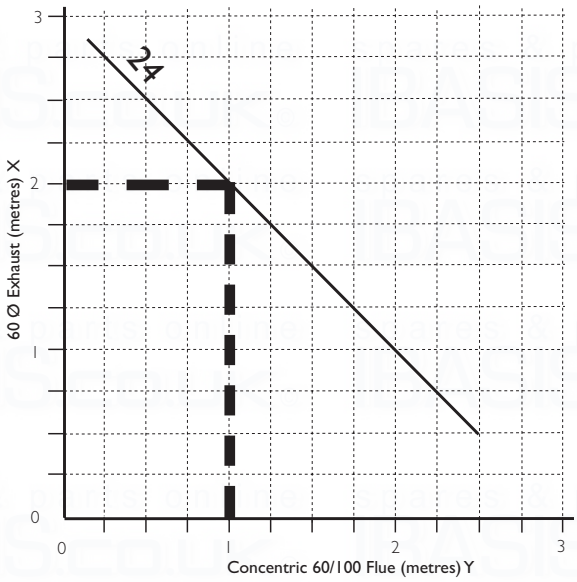


Example 3
Flue Lengths - OK

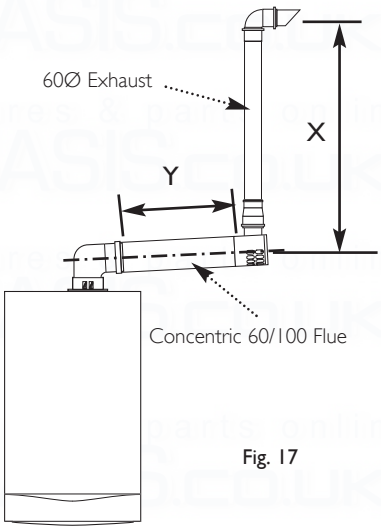


Fig. 17

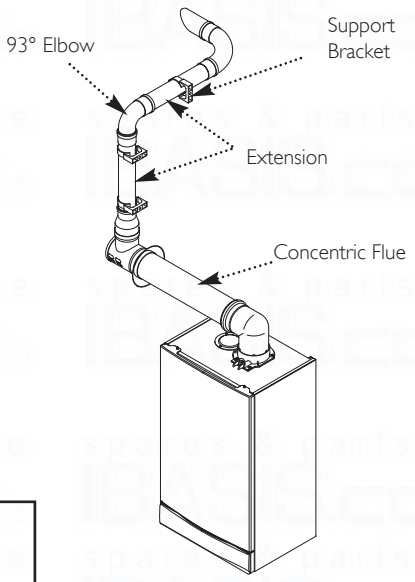


Fig. 18

| Additional Accessories | |
|---|---|
| A - 93° Elbow | 5117381 |
| B - 45° Elbow (Pair) | 5117382 |
| C - 1 metre 60Ø Extension | 5117380 |

## 9.0 Plume Displacement

### 9.2 Determining Permissible Lengths

**In the graph the solid line diagonal represents the relationship between the concentric flue assembly (and any extensions) and the 60Ø exhaust (and any extensions or additional bends).**

**Example 1 - Not Permissible**
If, for instance, a concentric length of 2 metres was required and the 60Ø exhaust needed to be 1.5 metres the graph shows that this combination would NOT be permissible as the intersection point would be above the solid diagonal line.

**Example 2 - Flue Lengths OK**
Where both lengths have been determined they can be applied to the graph to check that the installation is permissible. For example, if it was known that 1 metre of concentric flue and 1.5 metres of 60Ø exhaust were required, the values could be applied to the graph as shown in Example 2.. As the point of intersection of the dotted lines is below the solid diagonal line, the combination of lengths is shown to be acceptable.

**Example 3 - Flue Lengths OK**
In the example shown, assume that the concentric part of the flue needs to be 1 metres long. Find the position of '1' on the horizontal axis of the graph and then project upwards to the solid diagonal line. This is represented by the vertical thick dotted line. Where this dotted line intersects with the solid diagonal line on the graph, project across to the vertical axis. As can be seen this corresponds with 2 metres. Therefore, the total equivalent length of the 60Ø exhaust can be up to 2 metres. Any bend equivalencies must be accounted for i.e. 93° bends are equal to 1 metre, each 45° bend to 0.5 metres.

Flue Length - Worked Example
Potterton Performa 24 Eco HE

In Fig. 18 opposite an additional 93° bend has been included in the 60Ø exhaust. with 2 x 1metre extensions which have been cut to 0.25metres and fitted. The waste is discarded.

To calculate total length:-

| | |
|---|---|
| 2 x 0.25 metre Lengths = | 0.5 metres |
| 1 x 93° Elbow = | 1 metre |
| Total 60Ø Exhaust = | 1.5 metres |

After consulting the table in Example 3 it can be determined that the concentric flue could be up to approximately 0.5 metres long.

 © Baxi Heating UK Ltd 2011

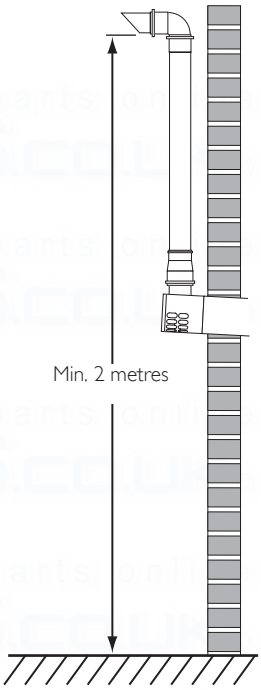


Fig. 19

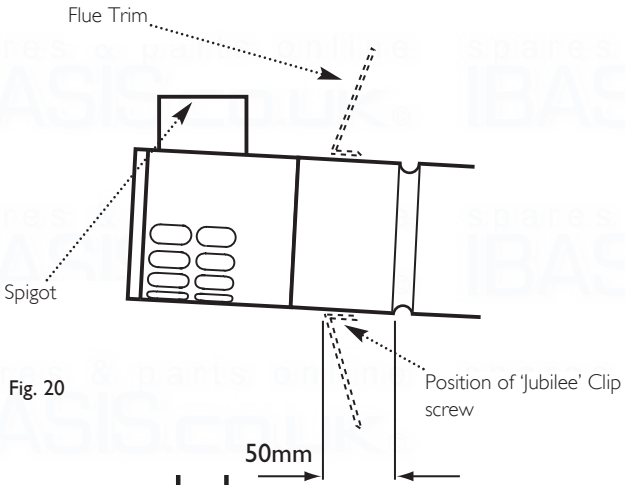


Fig. 20

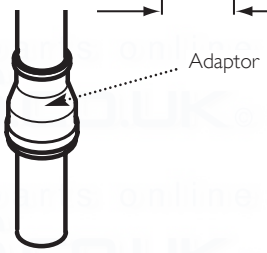


Fig. 22

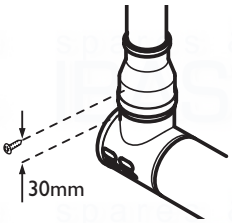


Fig. 21

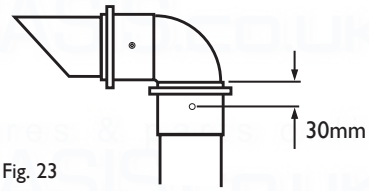


Fig. 23

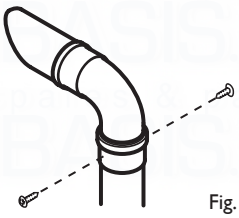

Fig. 24

## 9.3 General Fitting Notes

1. Cut a hole in the external wall which the concentric flue assembly will pass through. The hole should allow the flue to fall back to the boiler at an angle of 1.5° to 3°.

2. When completed the terminal must be at least 2 metres above ground level (Fig. 19).

3. Measure and cut to size the concentric assembly and any extensions that are being used.

4. Insert the concentric assembly through the hole from outside the building.

5. If required, the flexible flue trim should be fitted prior to this as it cannot be fitted after. Use the large 'Jubilee' clip to secure the trim to the flue (See Fig. 20, trim shown dotted), with the screw part of the clip at the bottom.

6. Connect any extensions or elbows that are being used to the concentric assembly. Engage the extension, elbow or concentric assembly in the boiler flue elbow. Fit the boiler flue elbow to the boiler adaptor.

7. Ensure that the concentric assembly and any extensions fall back to the boiler at an angle of 3° and that the external air inlet is to the bottom.

8. Use suitable brackets to support the concentric assembly and any extensions, and make good inside and outside.

9. The 60Ø exhaust can now be fitted. Slide the adaptor over the plain end of the 60Ø exhaust (Fig. 22) and engage the exhaust in the terminal. Slide the adaptor down over the spigot. Mark and drill the adaptor, using a 2mm bit, as shown in Fig. 21. Secure the adaptor to the spigot using one of the screws supplied.

10. If it is necessary to shorten the 60Ø exhaust or any of the extensions, the excess material must be cut from the plain end of the pipe.

11. Determine the position of the 60Ø exhaust and mark on the wall a suitable position for the support bracket. If extensions are being used, a support bracket is supplied in each kit.

12. Drill the wall, and fit the bracket(s) using the plug and screw provided.

13. Mark and drill the 60Ø exhaust, using a 2mm bit, as shown in Fig. 23. Complete the installation of the 60Ø exhaust, securing in the brackets.

14. Fit the 93° elbow/plume outlet and secure with the two remaining screws supplied. Ensure the plume outlet is at least 45° to the wall and that the 'peak' is uppermost (Fig. 24).

© Baxi Heating UK Ltd 2011

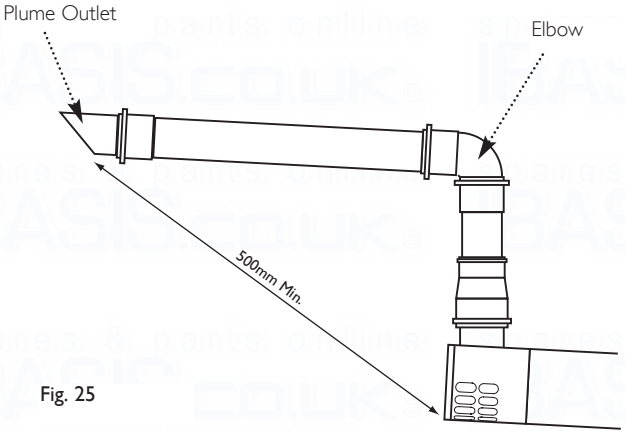


Fig. 25

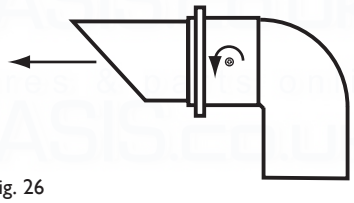

Fig. 26

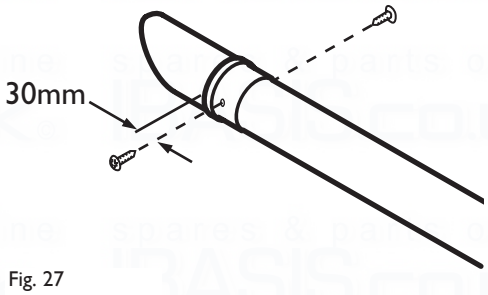


Fig. 27

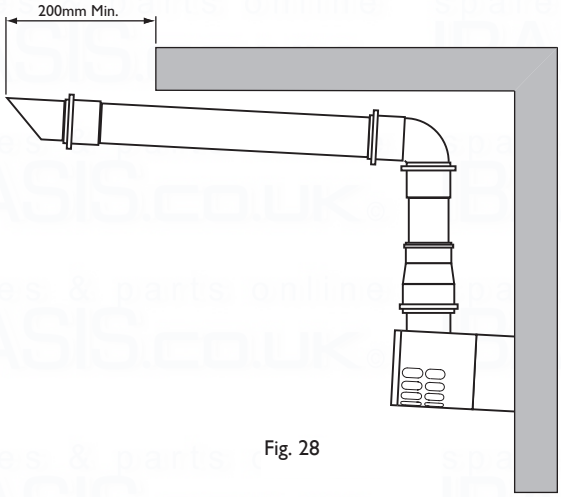


Fig. 28

## 9.3 General Fitting Notes (cont.)

15. For aesthetic purposes it is permissible to route the 60Ø exhaust in an enclosed box, but the air inlet and plume outlet MUST remain in free air.

16. It is also possible to separate the plume outlet from the 93° elbow to allow the flue to be installed as shown in Fig. 25.

17. To do this, first slacken the two screws retaining the plume outlet to the elbow, and remove the outlet (Fig. 26). The elbow can now be used to connect the vertical to horizontal 60Ø exhaust (Fig. 25). Retighten the screws in the elbow.

18. The outlet can now be fitted into the female end of an 60Ø extension piece. It must be secured using two of the screws supplied in the bag with the 'Jubilee' clip.

19. Mark the female end of the extension at 30mm as shown in two positions, directly opposite each other (Fig. 27).

20. Using a suitable bit (e.g. 2mm), drill through the extension and outlet. Secure using two of the screws supplied.

21. The remaining screw must be used to secure the adaptor to the concentric terminal.

22. When the plume outlet is positioned under a balcony or other projection (Fig. 28) it must protrude at least 200mm (it is not necessary to extend it further than this).

23. When under balconies or projections it is permissible to rotate the concentric flue length up to 70°, clockwise or anti-clockwise (Fig. 29), if there is insufficient space to connect vertically.

24.This will allow the connection of the exhaust to the outlet spigot.

25. All other minimum & maximum dimensions must be adhered to, and the air inlet positioned such that it will not be subject to rain entry.

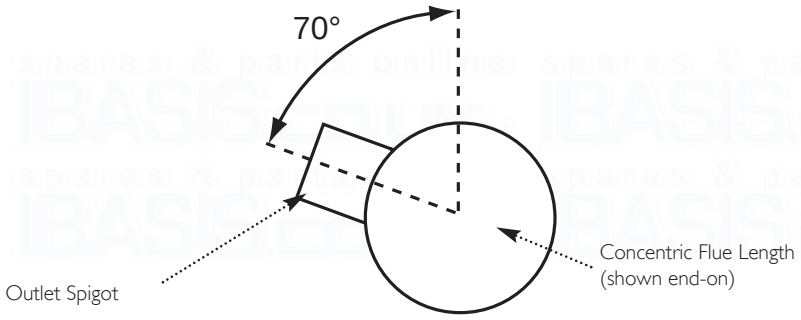


Fig. 29

 © Baxi Heating UK Ltd 2011

# 10.0 Installation

## 10.1 Initial Preparation

**The gas supply, gas type and pressure must be checked for suitability before connection (see Section 7.4).**

1. After considering the site requirements (see Section 7.0) position the fixing template on the wall ensuring it is level both horizontally and vertically.

2. Mark the position of the two most suitable fixing slots for the wall plate and boiler lower fixing holes. It is preferable to use the horizontal fixing slots.

3. Mark the position of the centre of the flue hole (rear exit). For side flue exit, mark as shown (Fig. 30).

4. Note the shaded area on the template. Pipework may be routed upwards behind the boiler, providing it does not conflict with the shaded area.

5. If required, mark the position of the gas and water pipes. Remove the template.

6. Cut the hole for the flue (minimum diameter 116mm).

7. Drill the wall as previously marked to accept the wall plugs supplied. Secure the wall plate using the fixing screws.

8. Using a spirit level ensure that the plate is level before finally tightening the screws.

9. Connect the gas and water pipes to the valves on the wall plate using the copper tails supplied. Ensure that the sealing washers are fitted between the connections.

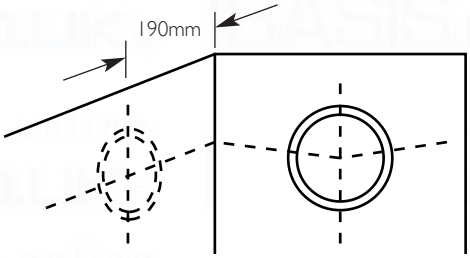


For Side Flue Exit

Fig. 30

## 10.2 Flushing

1. Connect a tube to the central heating flow or return pipe (Fig. 31).

2. Flush thoroughly (see System Details, Section 6.2).

## 10.3 Preparing The Boiler

1. Remove all packaging.

2. Stand the boiler on its base by using the rear lower edge as a pivot.

**NOTE: A small amount of water may drain from the boiler in the upright position.**

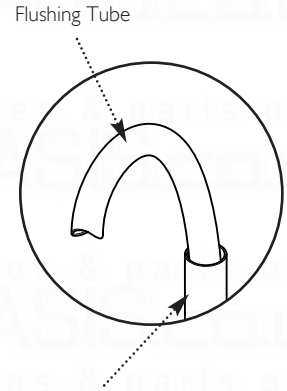


Fig. 31

© Baxi Heating UK Ltd 2011

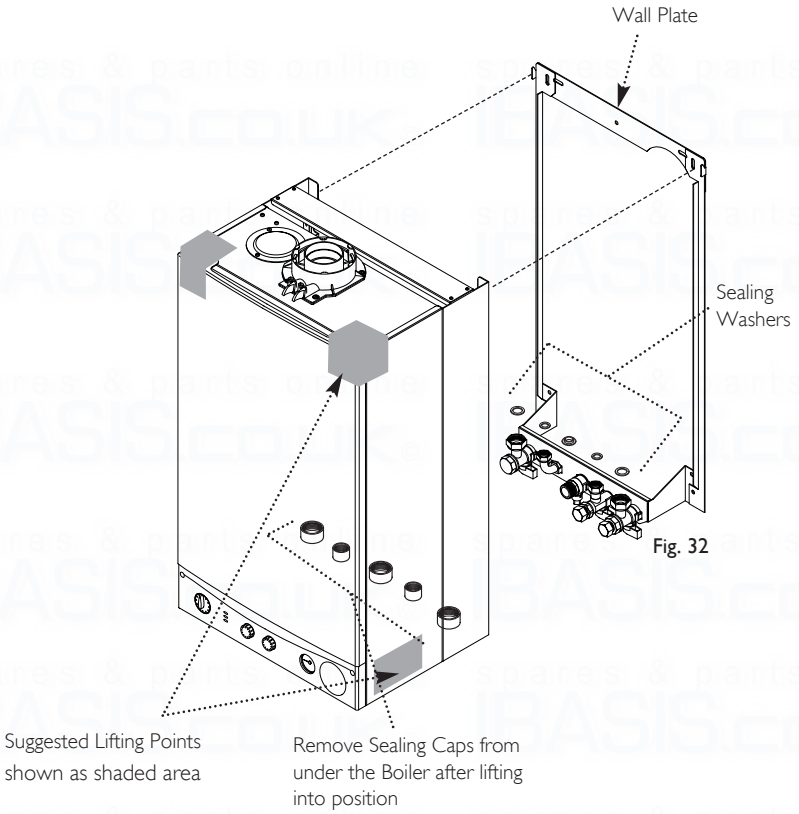


Fig. 32

## 10.4 Fitting The Boiler

1. Lift the boiler using the Lifting Points as shown by the shaded areas (Fig. 43). The boiler should be lifted by TWO PEOPLE. Engage the slots at the top rear of the boiler on the wall plate(see **Safe Manual Handling** page 5).

2. Pull the lower polystyrene cap off the boiler (where used). Ease the boiler forwards and remove the sealing caps from the boiler connections.

**NOTE:** A small amount of water may drain from the boiler once the caps are removed.

3. **Insert the sealing washers between the valves and pipes on the wall plate and the boiler connections. THE RUBBER WASHERS MUST BE USED ON THE GAS CONNECTION.**

4. Tighten all the connections.

## 10.5 Fitting the Safety Pressure Relief Discharge Pipe (Fig. 33)

1. Remove the discharge pipe from the kit.

2. Determine the routing of the discharge pipe in the vicinity of the boiler. Make up as much of the pipework as is practical, including the discharge pipe supplied.

3. The pipework must be at least 15mm diameter and run continuously downwards to a discharge point outside the building. See section 6.7 for further details.

4. Utilising one of the sealing washers, connect the discharge pipe to the adaptor and tighten the nut.

5. Complete the discharge pipework and route it to the outside discharge point.

**IMPORTANT: Make all soldered joints before connecting to the safety pressure relief valve.**

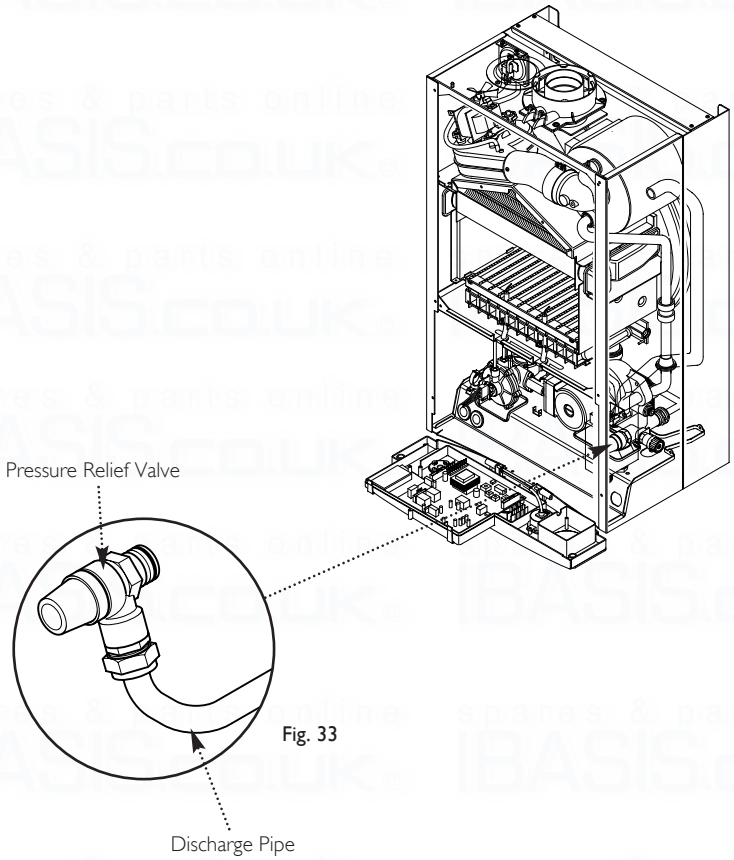


Fig. 33

 © Baxi Heating UK Ltd 2011

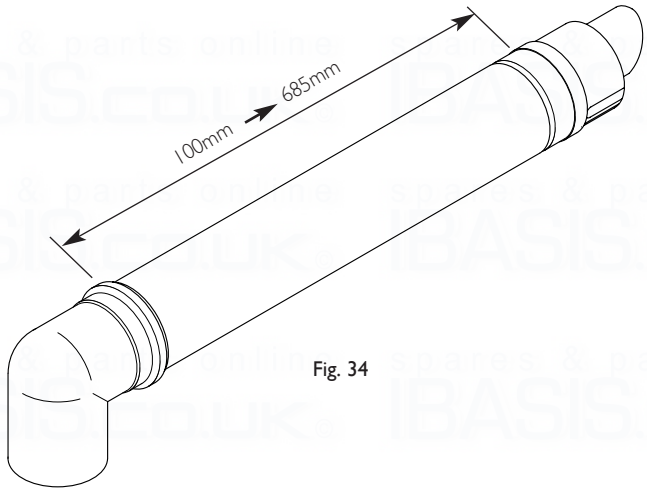


Fig. 34

## 10.6 Condensate Drain (see section 7.6)

1. Connect the condensate drain using the 1" BSP nut and seal supplied.

**Ensure the discharge of condensate complies with any national or local regulations in force (see British Gas "Guidance Notes for the Installation of Domestic Gas Condensing Boilers".**

2. The condensate outlet terminates in a 1" BSP nut and seal for the connection of 21.5mm (3/4in) plastic overflow pipe which should generally discharge internally into the household drainage system. If this is not possible, discharge into an outside drain is acceptable.

## 10.7 Fitting The Flue

HORIZONTAL FLUE

1. The standard flue is suitable for lengths between 100mm minimum and 685mm maximum, as measured from the edge of the flue elbow outlet to the joint between the terminal and air duct (Fig. 34).

2. Locate the flue elbow on the adaptor at the top of the boiler. Set the elbow to the required orientation (Fig. 35).

**NOTE: The flue elbow is angled at 91.5 degrees to ensure a fall back to the boiler.**

3. Measure the distance from the outside wall face to the elbow. This dimension will be known as 'X' (Fig. 36).

4. To dimension 'X' add 50mm. This dimension to be known as 'Y'.

**IMPORTANT: Check all dimensions before cutting.**

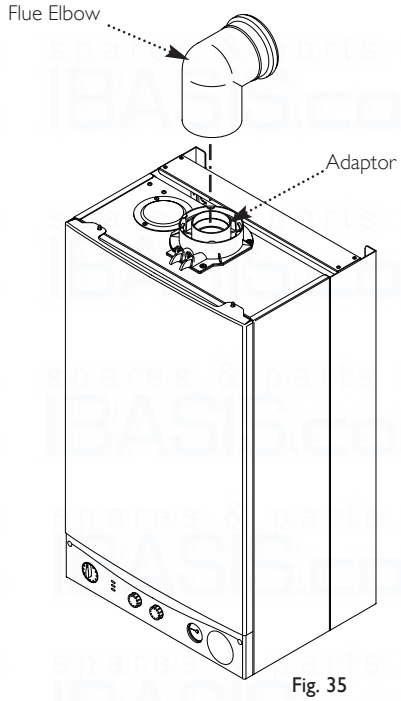


Fig. 35

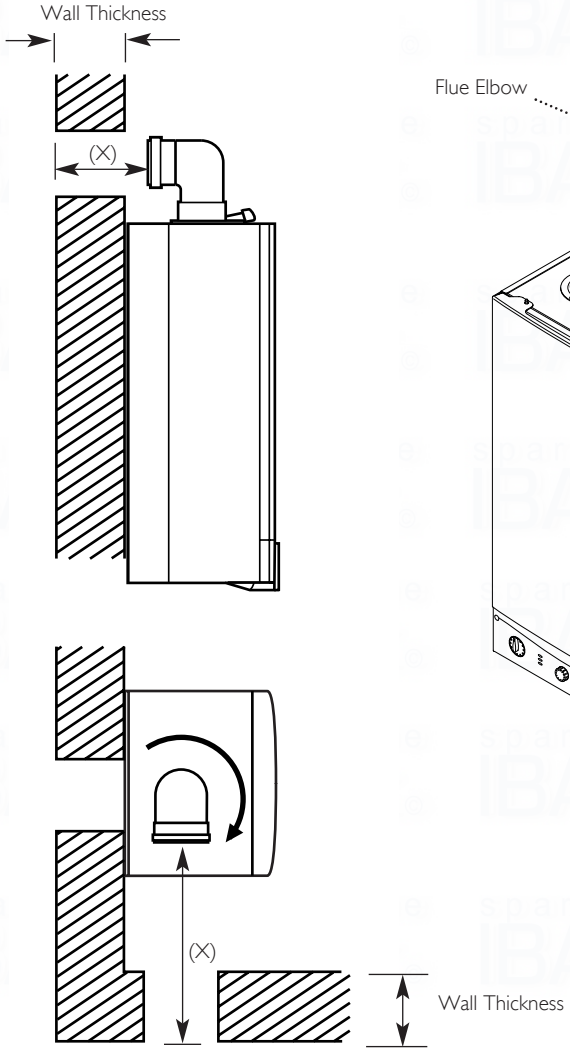


Fig. 36

© Baxi Heating UK Ltd 2011

## 10.7 Fitting the Flue (Cont)

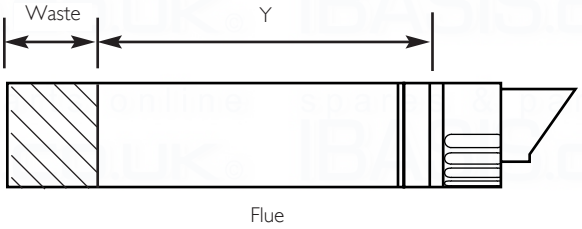


Fig. 37

5. Mark dimension 'Y' on the flue as shown (Fig. 37). Carefully cut the waste material from the flue, ensuring that the ducts are square and free from burrs.

6. The inner flue duct support bracket may be in the waste portion of the flue. In this case retrieve the bracket before discarding the waste.

7. Take the inner flue support bracket (if not already fitted) and engage it over the flue duct. This will centralise the flue and air ducts, and ease assembly (Fig. 38).

8. Insert the flue through the hole in the wall. Fit the elbow to the boiler adaptor, ensuring that it is pushed fully in.

9. Draw the flue back through the wall and engage it in the elbow. It may be necessary to use soap solution or similar to ease assembly of the elbow adaptor and flue (Fig. 39).

10. Make good between the wall and air duct outside the building.

11. Fit the flue trim if required, and if necessary fit a terminal guard (see Section 8.8 & 8.9).

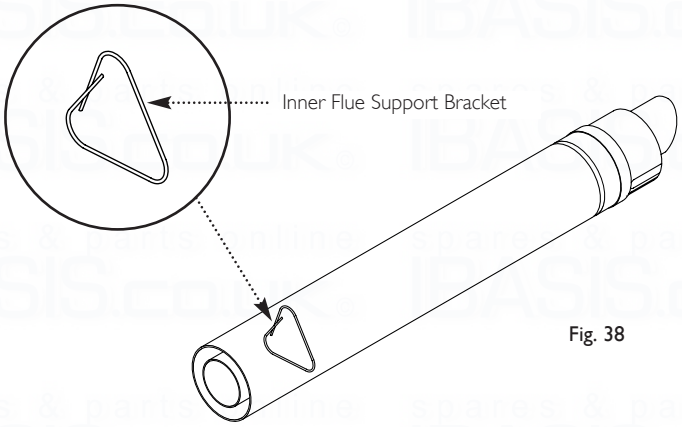


Fig. 38

VERTICAL FLUE

1. Only a flue approved with the Potterton Performa 24 Eco HE can be used.

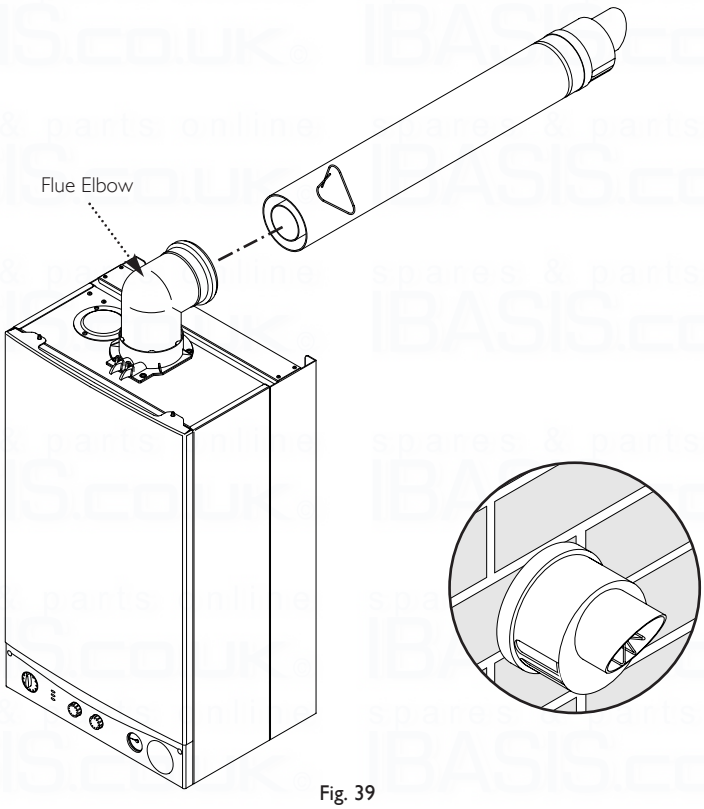


Fig. 39

 © Baxi Heating UK Ltd 2011

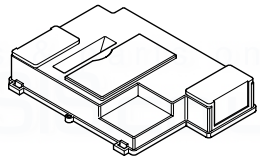

Control Box Cover

Fig. 41

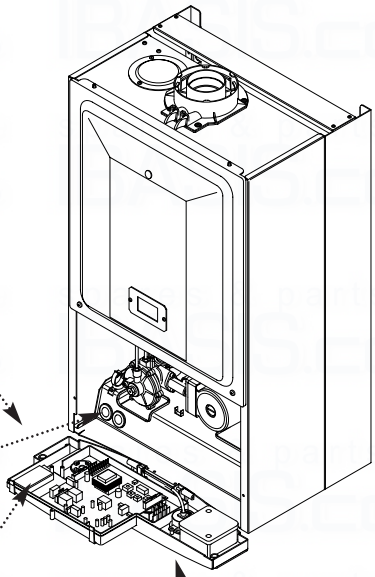

Fig. 40

Facia Panel

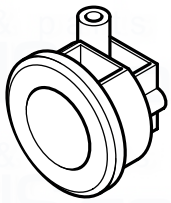

Fig. 42

Cable Clamp

Fuse

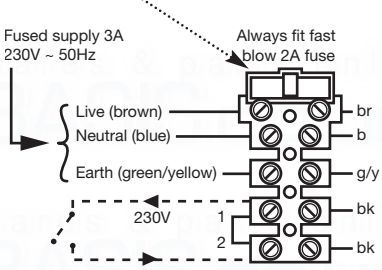


Terminal Block

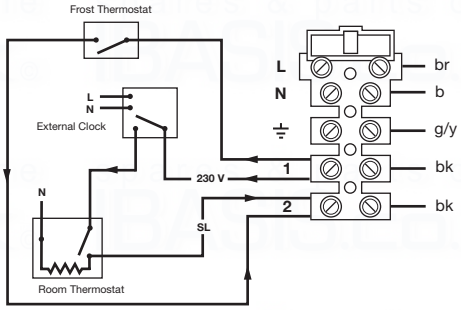


IMPORTANT: If an integral timer is fitted to the boiler an external frost thermostat wired as shown will not operate correctly. Only external timers may be used in such installations, as in the diagram.

Fig. 43

Functional Flow Diagram

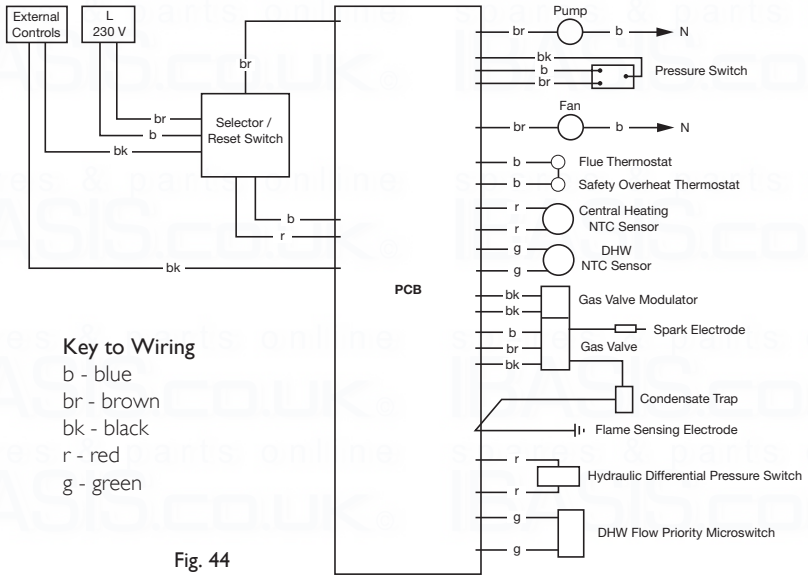


Key to Wiring
b - blue
br - brown
bk - black
r - red
g - green

Fig. 44

## 10.8 Making The Electrical Connections

To connect the mains input cable proceed as follows:-

1. Slacken the facia securing screws and lift the outercase panel so that its locating tabs are clear of the facia. Remove the panel.

2. Completely undo the screws securing the facia panel and hinge it down (Fig. 40).

3. Remove the control box cover securing screws. Disengage the barbs on the control box from the cover. Remove the cover (Fig. 41).

4. Slacken the cable clamp on the LH side of the boiler chassis (Fig. 42). Insert the cable through the clamp and route it to the terminal block.

5. Slacken the screws in the terminal block, connect the input cable, and tighten the screws.

6. If an external control is to be connected it can be done at this point. Run the input cable from the external control through the second cable clamp on the boiler chassis. Refer to the instructions supplied with the control.

7. To connect external control(s) remove the link between terminals 1 & 2. The 230V supply at terminal 1 must be connected to the external control. The switched output from the external control must be connected to terminal 2 (Fig. 43).

**NOTE: If the room thermostat being used incorporates an anticipator it MUST be wired as shown in Fig. 43**

**IMPORTANT: The external control MUST be suitable for 230V switching.**

8. Ensure that both mains input and, where fitted, external control input cables have sufficient slack to allow the control box to drop down. Tighten the cable clamp(s) on the boiler chassis.

9. If the optional integral timer is to be used it should be fitted at this point. Refer to the instructions supplied with the timer. **NOTE: An external frost thermostat cannot be used with the integral timer.**

## 10.9 Preliminary Electrical Checks

1. Prior to commissioning the boiler preliminary electrical system checks should be carried out.

2. These should be performed using a suitable meter, and include checks for Ground Continuity, Resistance to Ground, Short Circuit and Polarity.

© Baxi Heating UK Ltd 2011

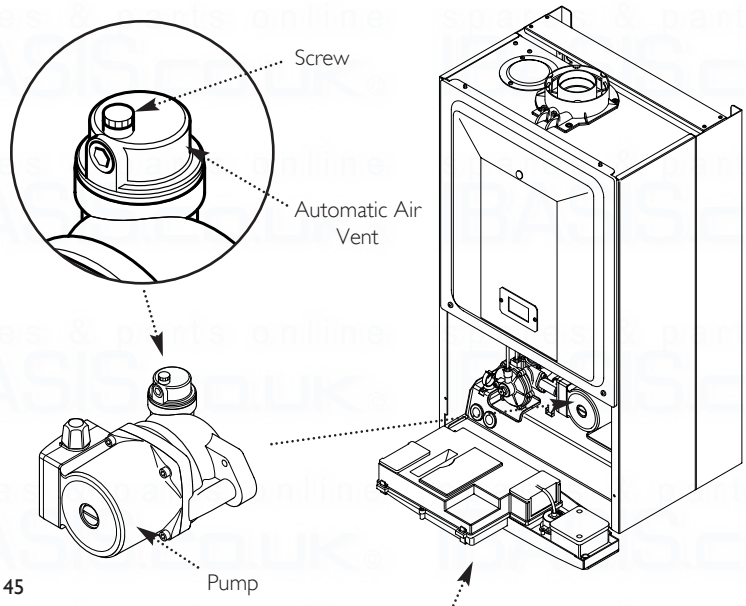


Fig. 45

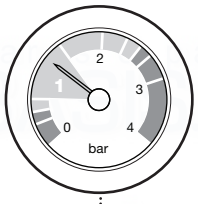


Fig. 46

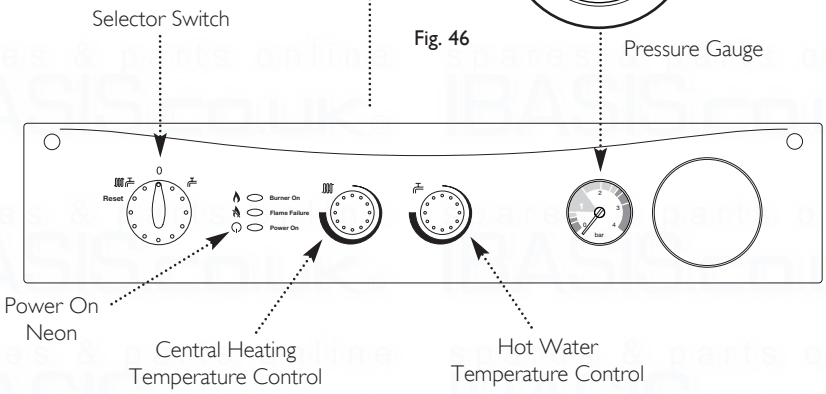


Fig. 47

## 11.1 Commissioning the Boiler

1. Reference should be made to BS 5449 Section 5 when commissioning the boiler.

2. At the time of commissioning complete all relevant sections of the Benchmark Commissioning Checklist at the rear of this publication.

3. Open the mains water supply to the boiler.

4. Open all hot water taps to purge the DHW system.

5. Ensure that the filling loop is connected and open, then open the heating flow and return valves on the boiler.

6. Open the screw on the automatic air vent (Fig. 45).

7. The system must be flushed in accordance with BS 7593 (see Section 6.2) and the flushing agent manufacturers instructions.

8. Pressurise the system to 1.0 bar then close and disconnect the filling loop.

9. Turn the gas supply on and purge according to in GB BS 6891 and in IE I.S. 813 "Domestic Gas Installations".

10. Test for gas soundness.

11. If at any time during commissioning it is required to terminate a particular cycle, e.g. the pump overrun period, turn the selector to the OFF position and then back to either ( ) or ( ) (Fig. 47).

 © Baxi Heating UK Ltd 2011

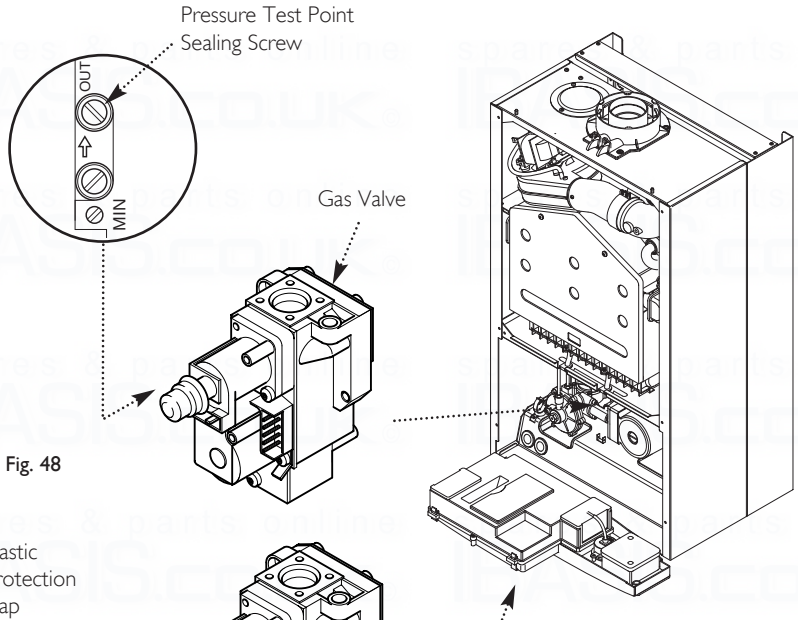


Fig. 48

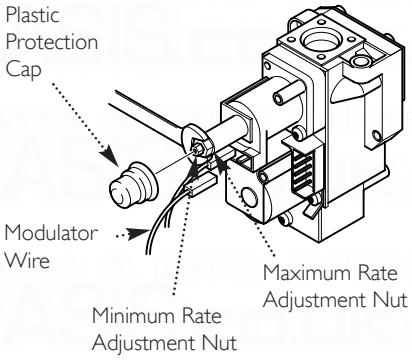


Fig. 49 **NOTE:** Gas Valve Electrical Plug/Igniter not shown for clarity.

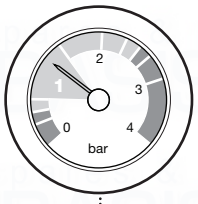


Fig. 50

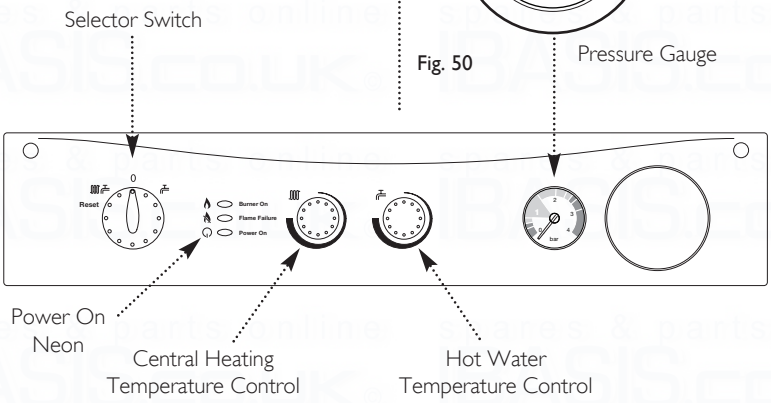


Fig. 51

## 11.2 Checking the Burner Pressure

1. Turn on the gas and electrical supplies to the boiler and ensure that all external controls are calling for heat.

2. Set the temperature controls to maximum and the selector switch to the Off position (Fig. 51).

3. Slacken the pressure test point sealing screw on the gas valve and connect a pressure gauge (Fig. 48).

4. Undo the screws securing the inner door panel. Lift the panel slightly to disengage it from the studs on top of the case.

5. Turn the selector switch fully anticlockwise against the spring pressure to the reset position and hold for 2 seconds to reset the boiler (Fig. 51).

6. Turn the selector switch to the Cental Heating and Domestic Hot Water position ( ). The power On neon ( ) will illuminate (Fig. 51).

7. Turn a hot water tap on to give a flow rate of at least 10l/min.

8. The pressure should be :-

| | |
|---|---|
| NG | 10.2mbar |
| Propane | 21.8mbar |

If not, check that the gas supply pressure is correct (Natural Gas 20mbar, and Propane 37mbar).

9. The pressure can be adjusted if required.

10. To check and set minimum pressure first remove one of the modulator wires.

**Adjusting the Pressure** (Fig 49)

11. Remove the plastic protection cap from the pressure adjustment nuts on the valve.

12. The smaller nut (5mm) adjusts minimum pressure and the larger nut (8mm) maximum pressure.

13. Using a suitable spanner adjust the relevant nut until the correct pressure is achieved.

14. Once the pressure has been set turn the boiler off and disconnect the pressure gauge.

15. Tighten the pressure test screw and refit the modulator to the valve. Reassemble in reverse order.

© Baxi Heating UK Ltd 2011

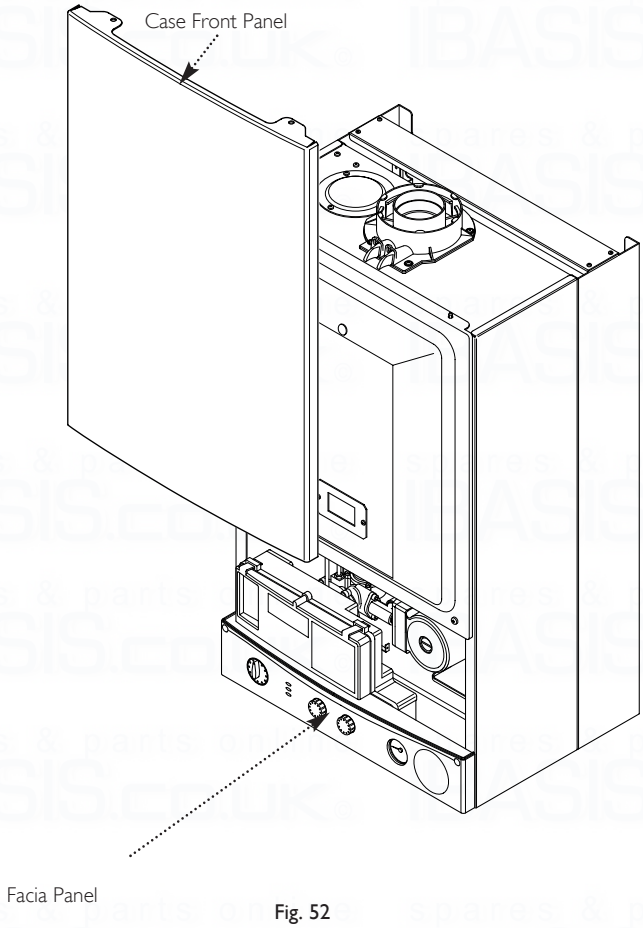


Fig. 52

## 12.1 Completion

1. Refit the case front panel and tighten the securing screws (Fig. 52).

2. Instruct the user in the operation of the boiler and system, explaining the operational sequence.

3. Carefully read and complete all sections of the Benchmark Commissioning Checklist at the rear of this publication that are relevant to the appliance and installation. These details will be required in the event of any warranty work. The publication must be handed to the user for safe keeping and each subsequent regular service visit recorded.

4. For IE, it is necessary to complete a "Declaration of Conformity" to indicate compliance with I.S. 813. An example of this is given in I.S. 813 "Domestic Gas Installations". This is in addition to the Benchmark Commissioning Checklist.

5. Hand over the Users Operating, Installation and Servicing Instructions, giving advice on the necessity of regular servicing.

 © Baxi Heating UK Ltd 2011

## 13.1 Annual Servicing

1. For reasons of safety and economy, it is recommended that the boiler is serviced annually. Servicing must be performed by a competent person.

2. After servicing, complete the relevant Service Interval Record section of the Benchmark Commissioning Checklist at the rear of this publication.

3. Ensure that the boiler is cool.

4. **Ensure that both the gas and electrical supplies to the boiler are isolated.**

5. Slacken the screws securing the facia panel. Lift the outercase panel so that its securing tabs are clear of the facia. Remove the panel (Fig. 53).

6. Remove the screws securing the inner door panel. Lift the panel slightly to disengage it from the studs on top of the case (Fig. 54).

7. Note the positions of the three wires on the fan motor and remove them. Remove the sensing tube from the fan spigot (Fig. 55).

8. Slacken the screws on the fan spigot outlet pipe clamp. Ease the clamp to the left over the pipe.

9. Remove the four screws securing the combustion box door and remove the door (Fig. 54).

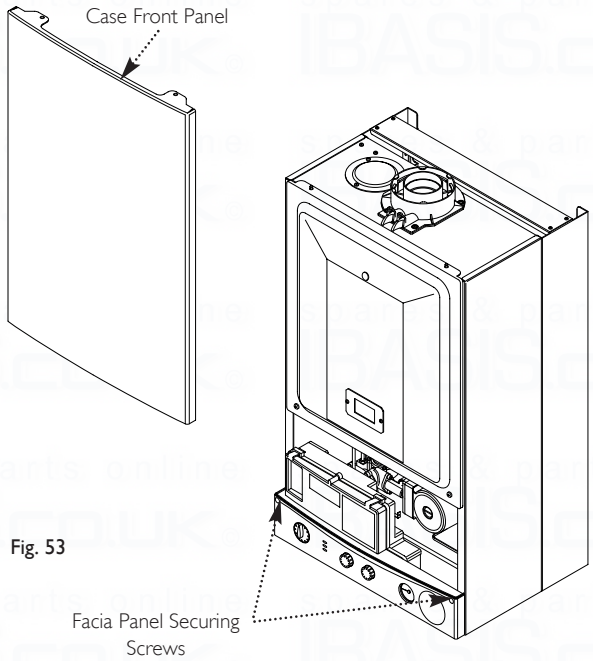


Fig. 53

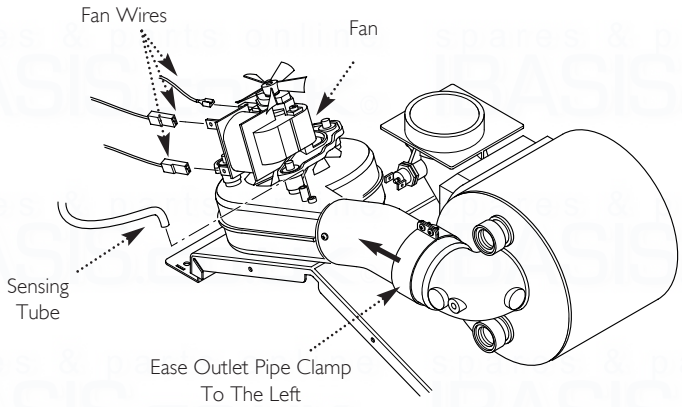


Fig. 55

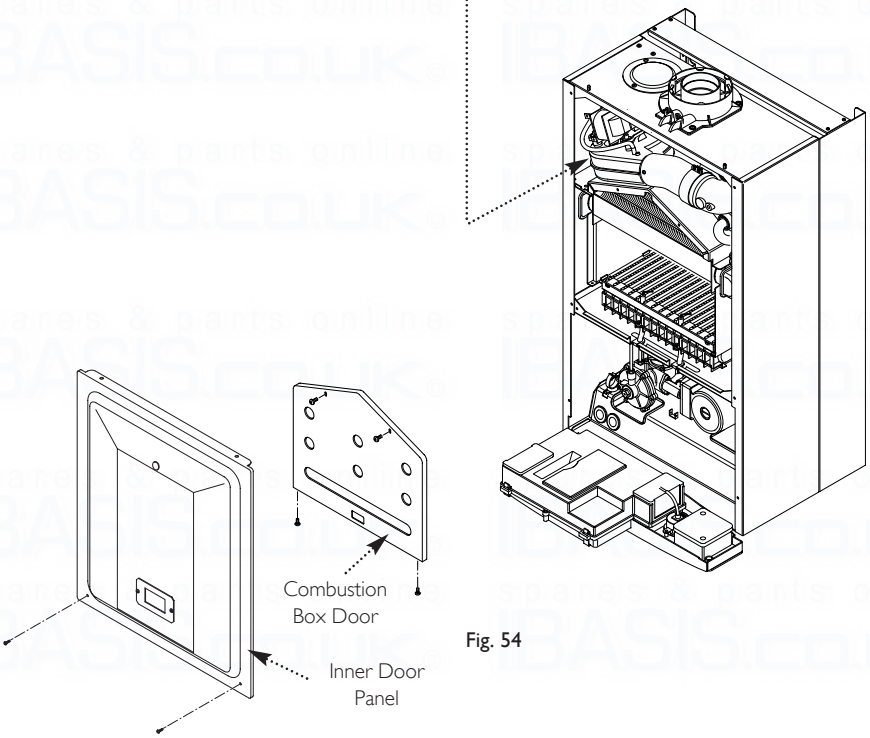


Fig. 54

© Baxi Heating UK Ltd 2011

## 13.1 Annual Servicing (Cont)

10. Ease the front edge of the left hand baffle upwards, disengaging the spring clip. Disengage the tab on the baffle from the slot in the fan hood (Fig. 56).

11. Undo the screws securing the fan and hood to the appliance back panel. Draw the assembly forwards (Fig. 57).

12. Undo the screws securing the burner to the injector manifold. Draw the burner out of the combustion box, pulling the electrode grommets from the slots in the combustion box lower panel (Fig. 58).

13. Disconnect the electrode leads and grommets from the electrodes. Completely remove the burner (Fig. 58).

14. Brush any deposits from the injectors. Do not use a pin or wire to clean them.

15. Brush the burner blades and venturis and clean the combustion box.

16. Ensure that the heat exchanger fins are clear of any obstruction.

**NOTE: If necessary the secondary heat exchanger may be dismantled - see section 14.24.**

**DHW Filters** (Fig. 60)

17. If the flow of domestic hot water is diminished, it may be necessary to clean the filters.

18. Initially check the cold water inlet tap filter.

19. Turn the tap off. Undo the blanking cap and remove the thread bush (Fig. 59).

20. Extract the filter and rinse thoroughly in clean water. Reassemble and check the flow. If required clean the manifold filter as described below.

21. Undo the filter cartridge from the inlet/return manifold.

22. Dismantle the cartridge and carefully remove the flow regulator and filter gauze. Rinse them thoroughly in clean water and reassemble in reverse order.

23. Check that the pressure vessel charge is 0.5bar and reassemble in reverse order of dismantling and recommission.

24. Turn the selector switch fully anticlockwise against the spring pressure to the reset position and hold for 2 seconds to reset the boiler.

25. Complete the relevant Service Interval Record section of the Benchmark Commissioning Checklist at the rear of this publication and then hand it back to the user.

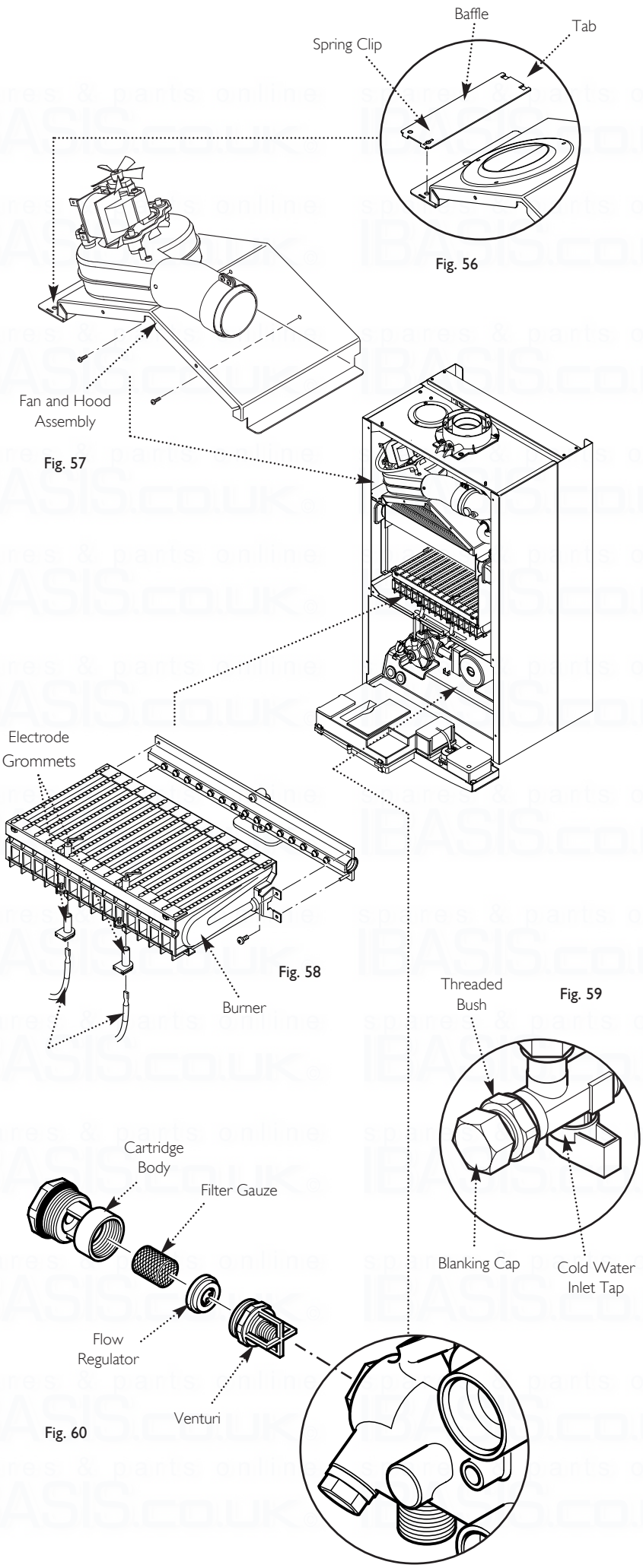


 © Baxi Heating UK Ltd 2011

# 14.0 Changing Components

**IMPORTANT: When changing components ensure that both the gas and electrical supplies to the boiler are isolated before any work is started. When the new component has been fitted turn the selector switch fully anticlockwise against the spring pressure to the 'Reset' position and hold for 2 seconds to reset the boiler before recommissioning.**

See Section 13.1 "Annual Servicing" for removal of case panel, door etc.

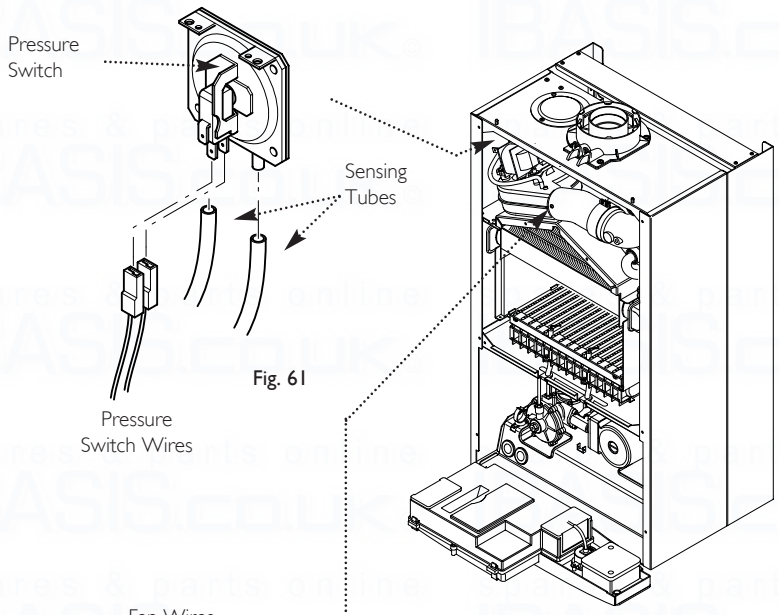


Fig. 61

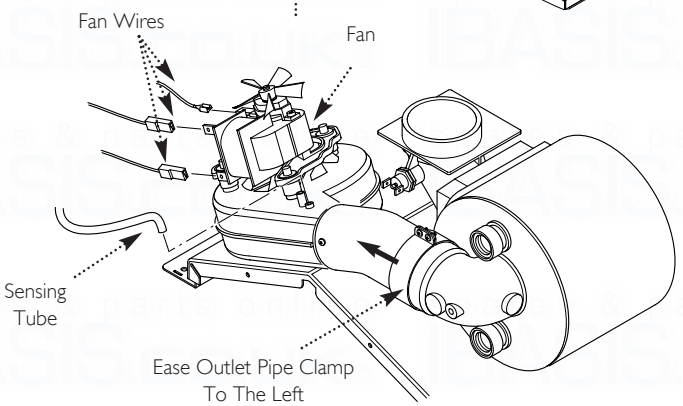


Fig. 62

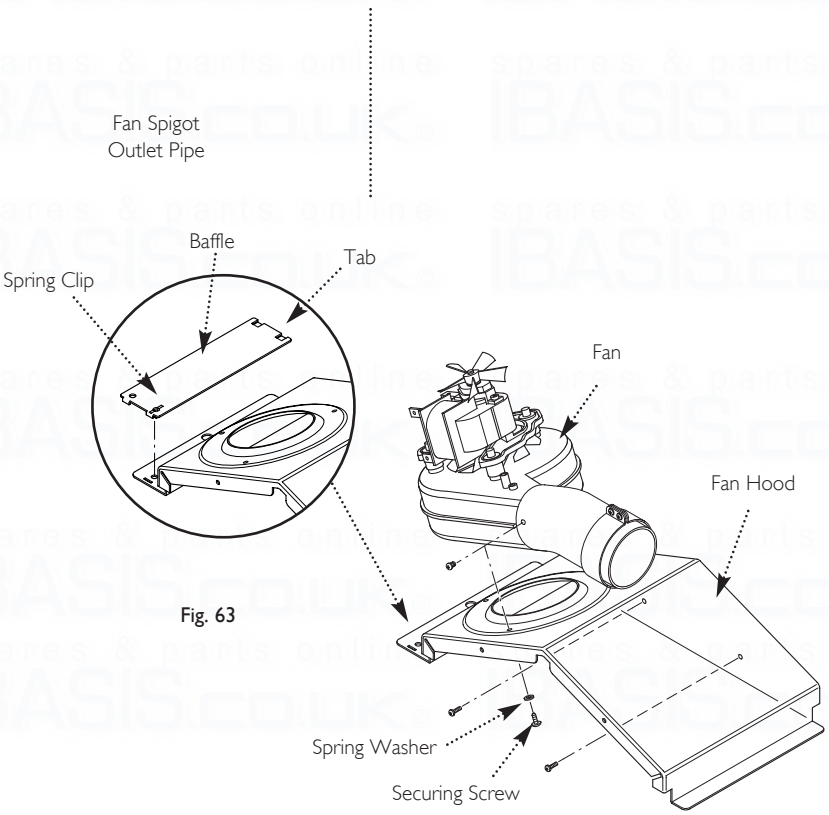


Fig. 63

## 14.1 Fan (Figs. 62 & 63)

1. Note the positions of the sensing tube on the outlet elbow and three wires on the fan motor and remove them.

2. Slacken the screw on the fan spigot outlet pipe clamp. Ease the clamp to the left over the pipe.

3. Remove the four screws securing the combustion box door and remove the door.

4. Ease the front edge of the left hand baffle upwards, disengaging the spring clip. Disengage the tab on the baffle from the slot in the fan hood.

5. Undo the screws securing the fan hood to the appliance back panel, and draw the fan and hood assembly forwards.

6. Remove the screws and spring washers securing the fan to the hood, and the screw securing the outlet pipe.

7. Transfer the outlet pipe and clamp to the new fan.

8. Fit the new fan to the hood using the screws and spring washers previously removed.

9. Reassemble in reverse order of dismantling.

## 14.2 Pressure Switch (Fig. 61)

1. Remove the fan and hood assembly as described in section 14.1.

2. Note the positions of the two sensing tubes and wires and remove them.

3. Remove the two screws holding the pressure switch to the bracket on the combustion box top panel.

4. Fit the new pressure switch and reassemble all components in reverse order of dismantling.

© Baxi Heating UK Ltd 2011

## 14.3 Heat Exchanger (Fig. 64)

1. Remove the fan as described in section 14.1.

2. Drain the primary circuit. Prise the three pipe connecting clips off the joints in the flow and return pipes. Remove the heat exchanger return pipe.

3. Lift the heat exchanger to disconnect the flow pipe joint. Withdraw it from the appliance, taking care not to damage the rear insulation piece.

4. Fit the new heat exchanger.

5. Reassemble in reverse order of dismantling, and repressurise the system.

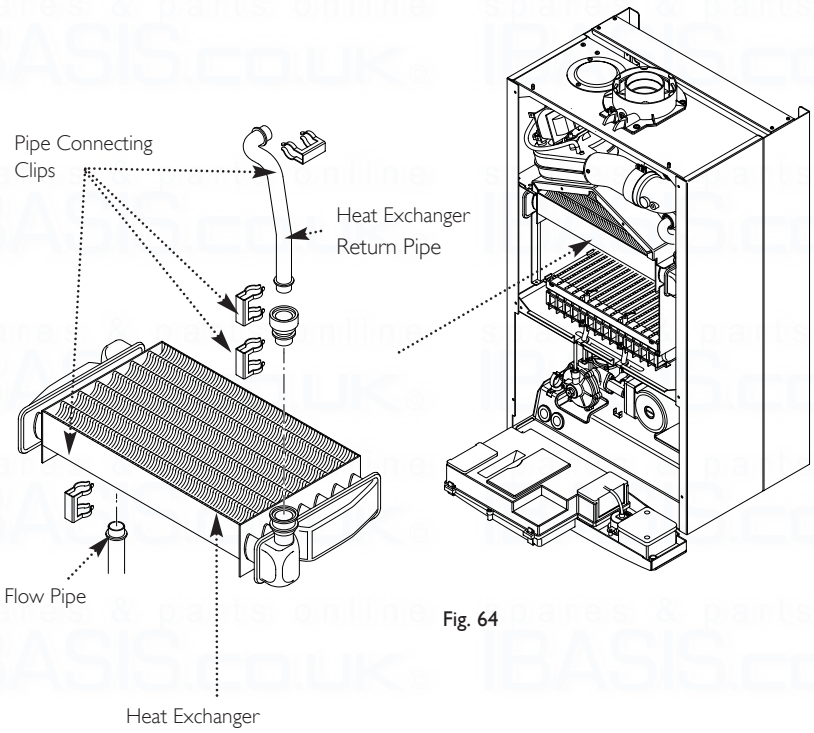


Fig. 64

## 14.4 Burner (Fig. 65)

1. Remove the four screws securing the combustion box door and remove the door.

2. Undo the screws securing the burner to the injector manifold. Draw the burner out of the combustion box, pulling the electrode grommets from the slots in the combustion box lower panel.

3. Disconnect the electrode leads and grommets from the electrodes. Completely remove the burner.

4. Undo the screws securing the electrodes to the burner. Examine the condition of the electrodes, replacing if necessary. Fit the electrodes to the new burner.

5. Engage the burner location brackets over the studs on the injector manifold and reassemble in reverse order.

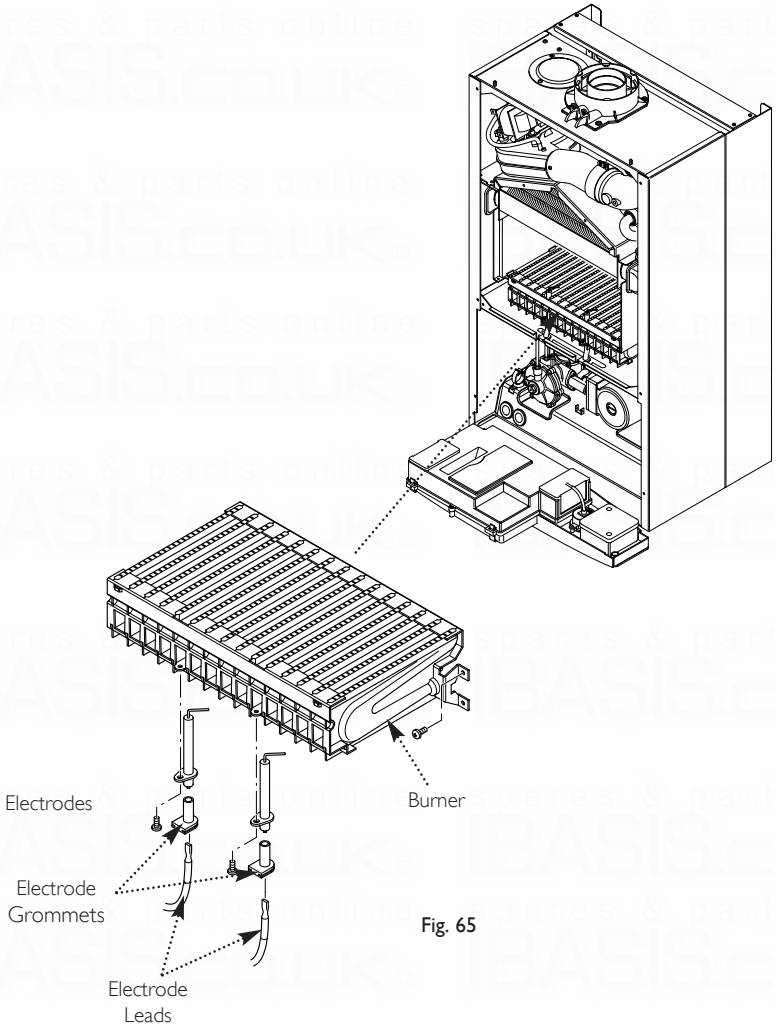


Fig. 65

 © Baxi Heating UK Ltd 2011

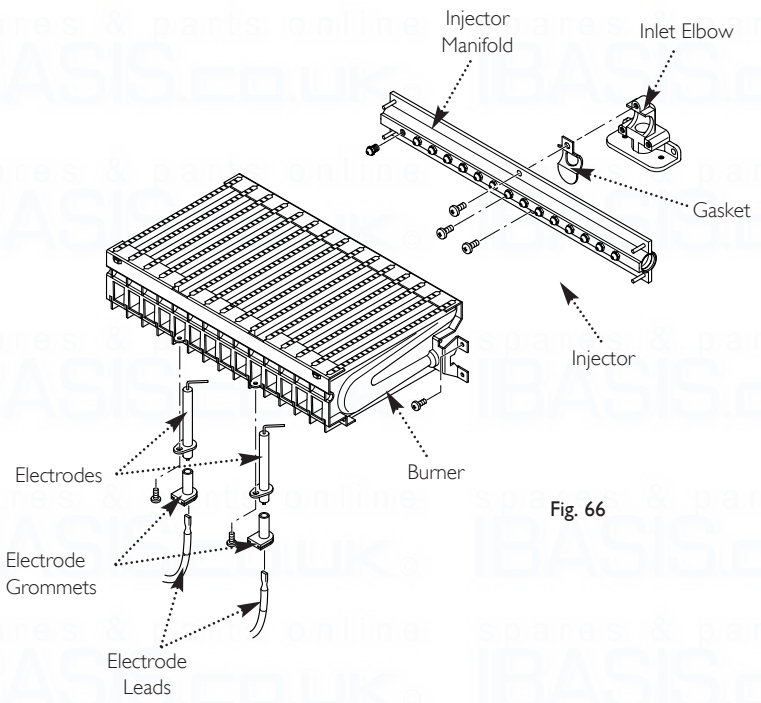


Fig. 66

## 14.5 Injectors (Fig. 66)

1. Remove the burner as described in Section 14.4.

2. Undo the screws securing the injector manifold to the inlet elbow and remove the manifold.

3. Unscrew and replace injectors as required and examine the sealing gasket, replacing as necessary. Reassemble in reverse order.

## 14.6 Electrodes (Fig. 66)

1. Remove the four screws securing the combustion box door and remove the door.

2. Undo the screws securing the burner to the injector manifold. Draw the burner out of the combustion box, pulling the electrode grommets from the slots in the combustion box lower panel.

3. Disconnect the lead and grommet from the electrode being replaced. Undo the securing screw and withdraw the electrode to the burner.

4. Reassemble in reverse order.

## 14.7 Insulation (Fig. 67)

1. Remove the four screws securing the combustion box door and remove the door.

2. Slide the side insulation pieces carefully out of their carriers.

3. To replace the rear insulation piece it is necessary to remove the heat exchanger as described in Section 14.3 and slide out the side pieces.

4. The combustion box door insulation piece can be replaced by carefully bending up the two retaining tabs.

5. Replace all insulation pieces and reassemble in reverse order.

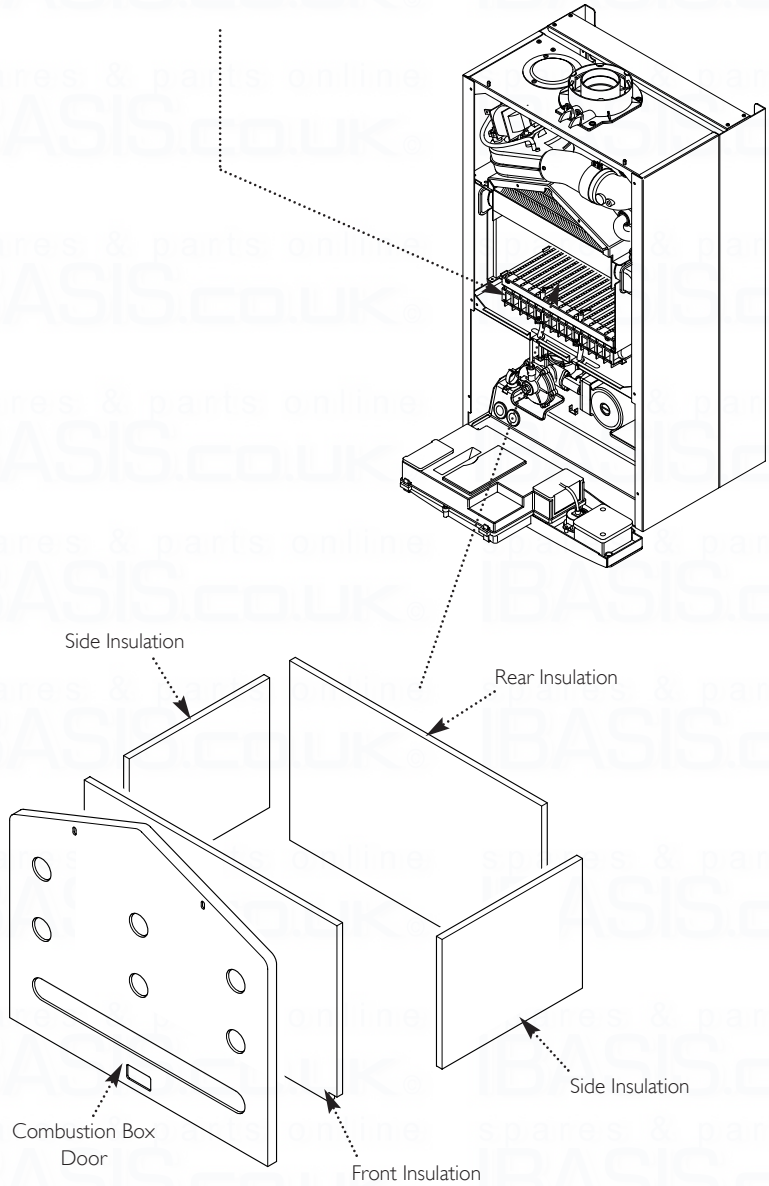


Fig. 67

© Baxi Heating UK Ltd 2011

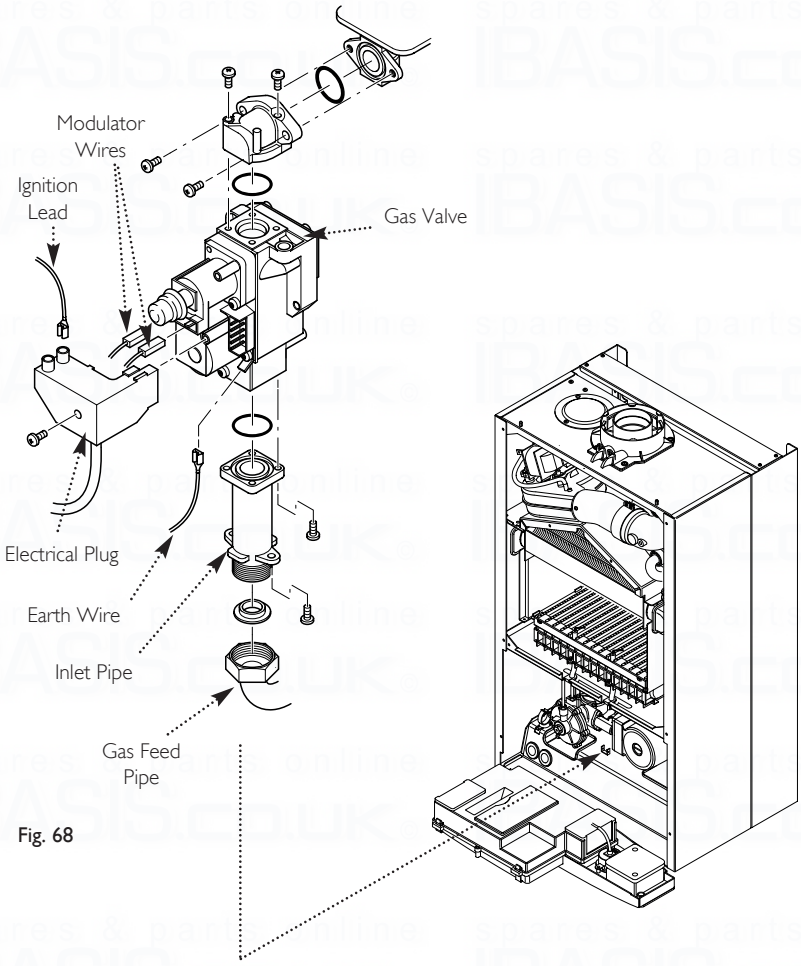


Fig. 68

## 14.8 Gas Valve (Fig. 68)

1. Undo the nut on the gas feed pipe under the boiler.

2. Completely undo the securing screws and hinge the facia panel down.

3. Disconnect the wires from the valve modulator and the ignition lead from the spark generator. Disconnect the pressure sensing pipe from the valve. Undo the screw securing the spark generator electrical plug to the valve and disconnect the plug.

4. Pull the earth wire off the spade terminal on the valve.

5. Remove the screws securing the inlet pipe flange to the boiler bottom panel and those securing the outlet manifold to the burner manifold.

6. Remove the valve from the boiler.

7. Note the orientation of the inlet pipe and outlet manifold. Undo the securing screws and remove the pipe and manifold.

8. Examine the 'O' ring seals for damage, replacing as necessary.

9. Fit the inlet pipe and outlet manifold to the new valve, ensuring that the 'O' ring seals are in place.

10. Reassemble in reverse order and check the burner pressure (Section 11.2).

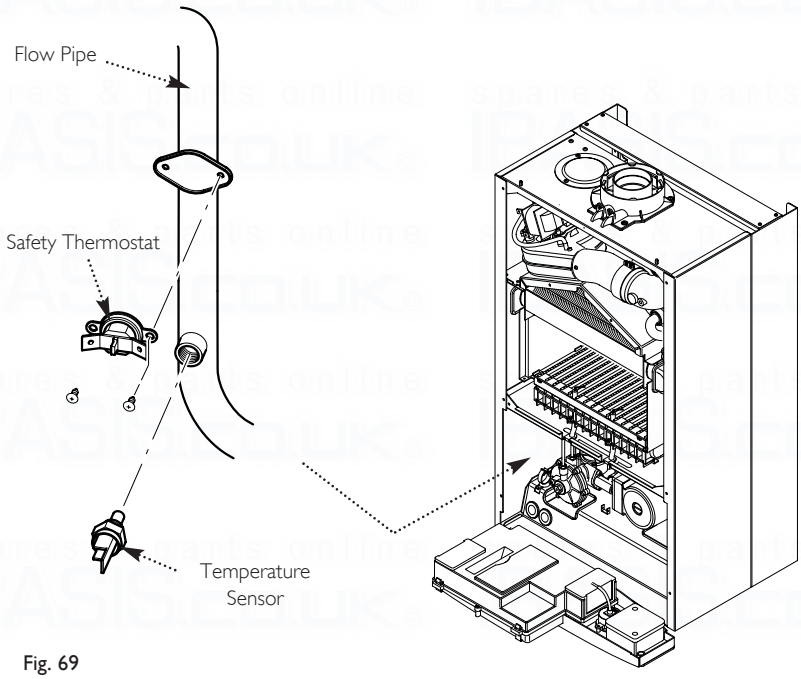


Fig. 69

## 14.9 Temperature Sensor (Fig. 69)

1. Ease the retaining tab on the sensor away and disconnect the electrical plug.

2. Unscrew the sensor from it's pocket and reassemble in reverse order. The plug will only fit one way.

## 14.10 Safety Thermostat (Fig. 69)

1. Pull the electrical connections off the thermostat.

2. Remove the screws securing the thermostat to the mounting plate on the flow pipe.

3. Reassemble in reverse order. The thermostat is not polarised - either wire can fit either terminal on the thermostat.

 © Baxi Heating UK Ltd 2011

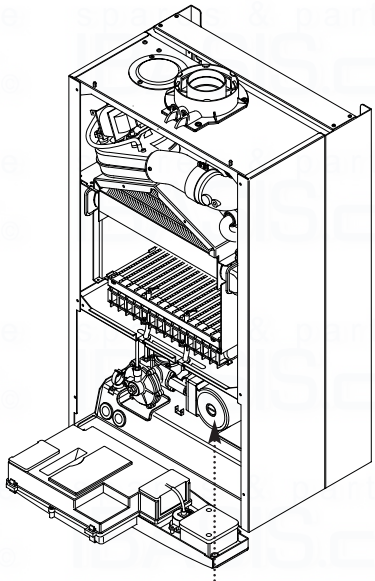

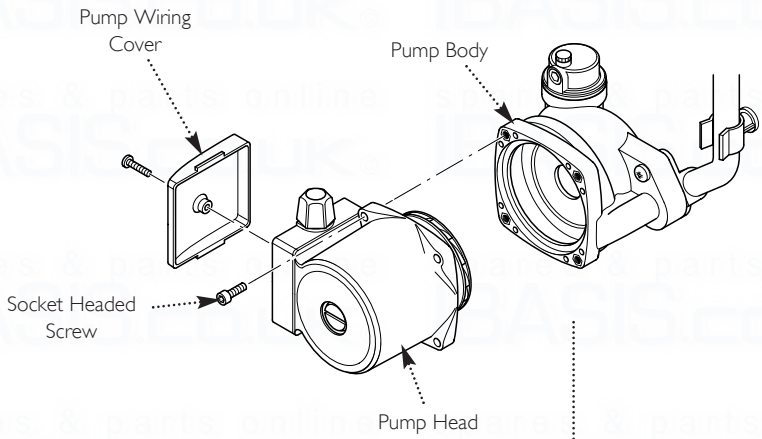


Fig. 71

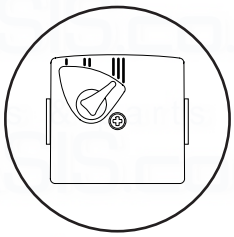


Fig. 72

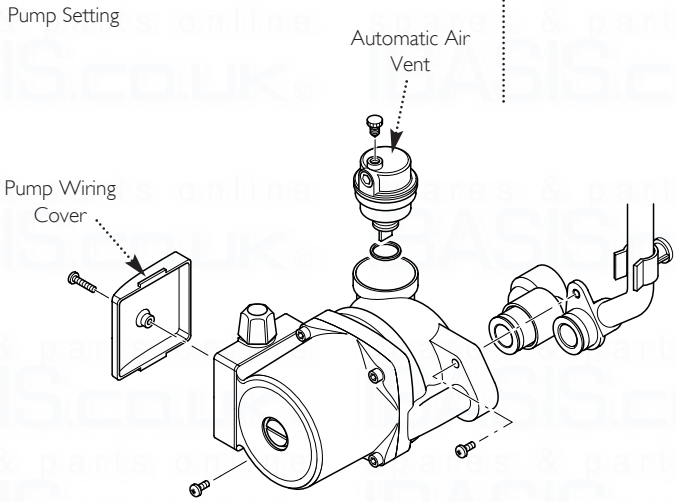


Fig. 73

## 14.11 Pump - Head Only (Fig. 71)

1. Drain the primary circuit and remove the socket head screws securing the pump head to the body and draw the head away.

2. Undo the screw on the pump wiring cover and remove the cover. Using a suitable flat bladed screw driver press the cable securing levers downwards to release each wire after noting their position.

3. A standard Grundfos 15-60 replacement head can now be fitted. Connect the wiring to the new head. **The pump speed must be set to 3** (Fig. 72).

4. Reassemble in reverse order.

## 14.12 Pump - Complete (Fig. 73)

1. Drain the primary circuit and unscrew the automatic air vent from the pump body. Undo the two screws securing the body to the pipe and manifold and draw the pump forwards.

2. Undo the screw on the pump wiring cover and remove the cover. Using a suitable flat bladed screw driver press the cable securing levers downwards to release each wire after noting their position.

3. Connect the wiring to the new pump. Examine the 'O' ring seals on the return pipe and manifold, replacing if necessary.

4. Fit the air vent to the pump body and reassemble in reverse order.

## 14.13 Automatic Air Vent (Fig. 73)

1. Drain the primary circuit and unscrew the automatic air vent from the pump body.

2. Examine the 'O' ring seal, replacing if necessary, and fit it to the new automatic air vent.

3. Reassemble in reverse order.

© Baxi Heating UK Ltd 2011

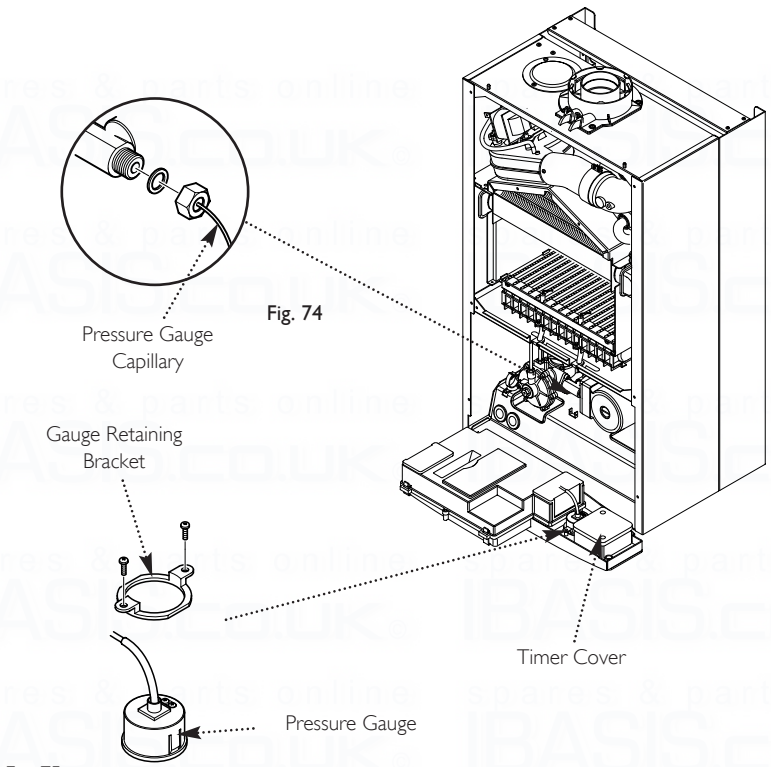


Fig. 74

Fig. 75

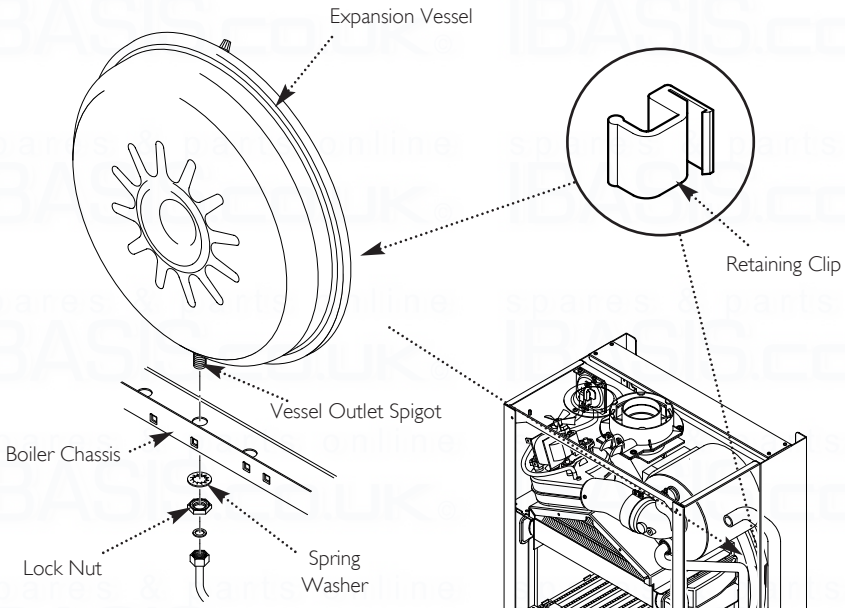


Fig. 76

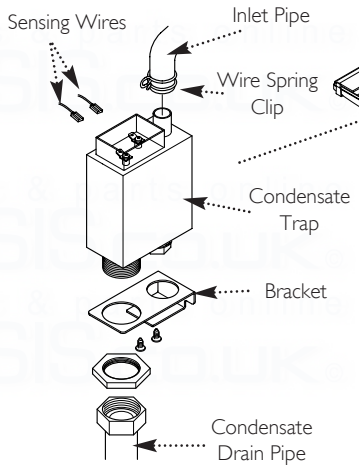


Fig. 77

## 14.14 Pressure Gauge (Figs. 74 & 75)

1. Drain the primary circuit and undo the nut on the pressure gauge capillary.

2. Remove the timer cover and ease the timer wiring aside. Undo the screws securing the gauge retaining bracket.

3. Remove the bracket and gauge assembly. Depress the barbs on the side of the gauge and remove the retaining bracket.

4. Reassemble in reverse order.

## 14.15 Expansion Vessel (Fig. 76)

1. To replace the expansion vessel it is necessary to remove the boiler from the wall.

**Note: Alternatively a vessel of equivalent capacity can be fitted on the system return pipe as close as possible to the boiler.**

2. Drain the system and undo all gas, water and condensate drain connections. Remove the flue elbow.

3. Lift the boiler off the wall plate and lay it on it's side on a clean flat surface.

4. Undo the nut on the vessel outlet spigot, and remove the locknut and spring washer securing the spigot to the boiler chassis.

5. Undo the screws and remove the appliance upper cross member. Slide the expansion vessel out of the retaining clips.

6. Reassemble in reverse order. Fully recommission the appliance and system.

## 14.16 Condensate Trap (Fig. 77)

1. Disconnect the two sensing wires from the trap connections.

2. Squeeze together the wire spring clip to release and ease the inlet pipe from the trap spigot.

3. Undo the nut securing the condensate drain pipe to the trap. Disconnect the pipe and sealing washer.

4. From underneath the boiler remove the screws securing the trap bracket.

5. Remove the trap and bracket from the boiler. Undo the locknut securing the trap to the bracket.

6. Reassemble in reverse order.

 © Baxi Heating UK Ltd 2011

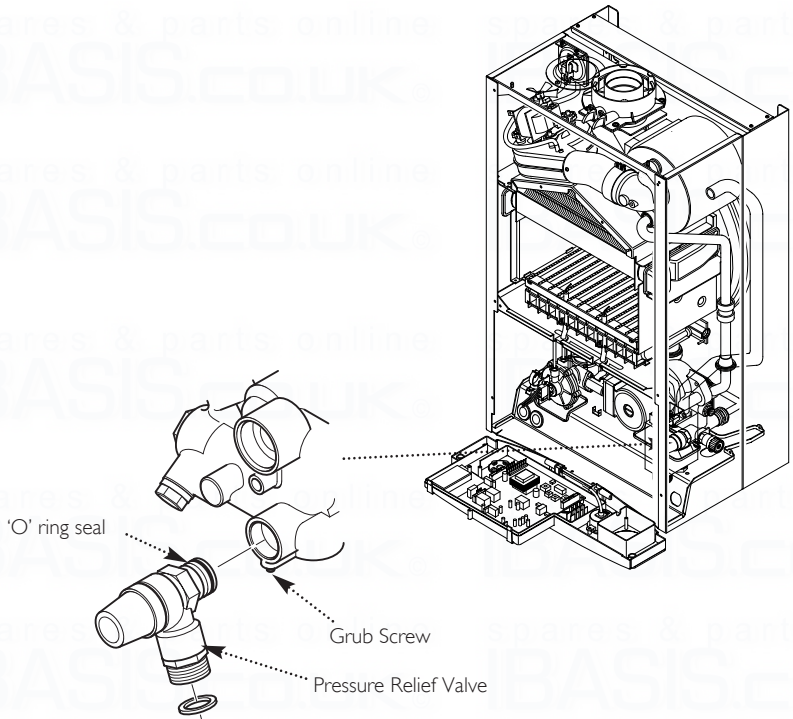


Fig. 78

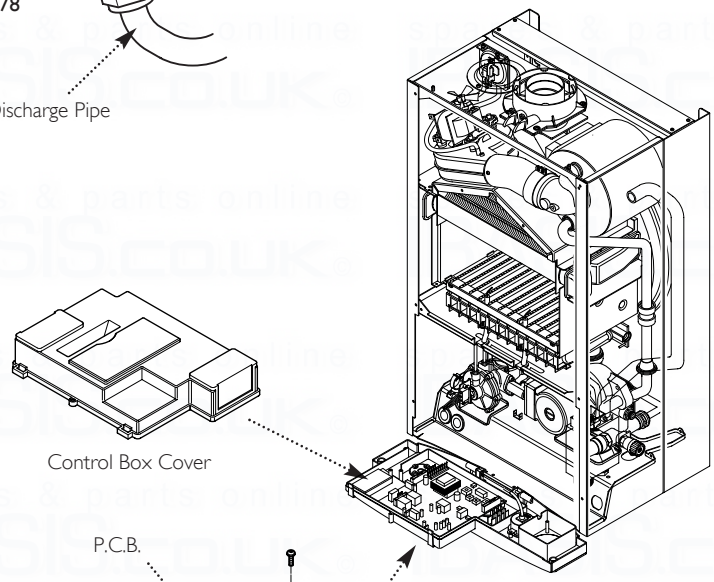


Fig. 79

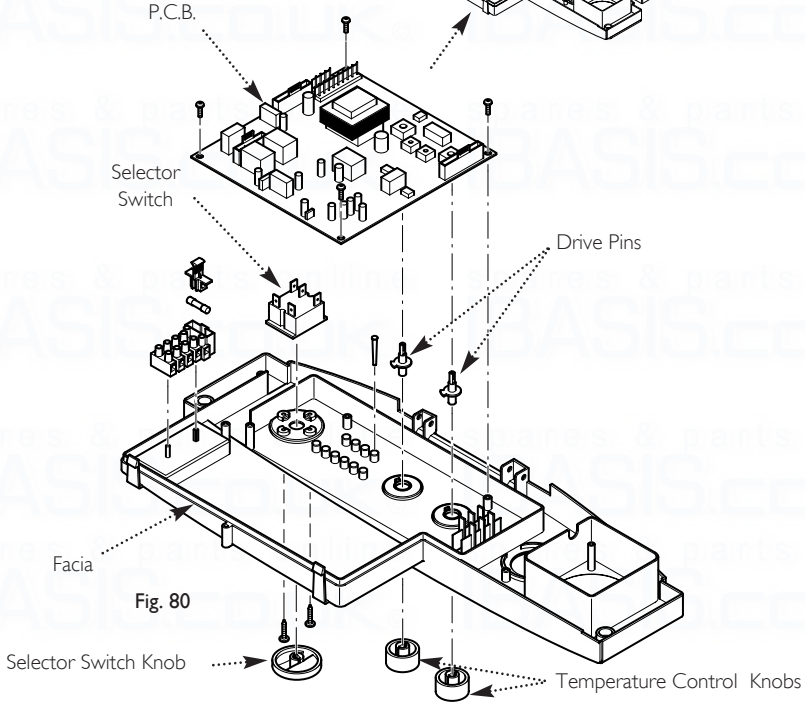


Fig. 80

## 14.17 Pressure Relief Valve (Fig. 78)

1. Drain the primary circuit.

2. Disconnect the discharge pipe from the valve. Using a suitable hexagon key undo the grub screw sufficiently to release the valve.

3. Note the orientation of the valve, rotate it and withdraw it from the manifold.

4. Fit the new valve and 'O' ring seal and set to the previously noted orientation. Reassemble in reverse order.

## 14.18 P.C.B. (Fig. 80)

1. Note the settings of the temperature control knobs. Rotate the knobs fully anticlockwise and carefully pull them off the drive pins.

2. Completely undo the screws securing the control box cover and release the cover retaining barbs from their slots. Disengage the rear of the cover from the control box hinge pin (Fig. 79).

3. Note the position of all plugs and wires on the P.C.B. and disconnect them.

4. Undo the securing screws and remove the P.C.B. Transfer the control knob drive pins to the new P.C.B. and turn them fully anticlockwise.

5. Reassemble in reverse order, ensuring that the temperature controllers are reset to their previous positions.

## 14.19 Selector Switch (Fig. 80)

1. Note the setting of the selector switch knob and carefully pull it off the facia.

2. Completely undo the screws securing the control box cover and release the cover retaining barbs from their slots. Disengage the rear of the cover from the control box hinge pin (Fig. 79).

3. Note the position of the electrical connections and the orientation of the switch. Remove the electrical connections.

4. Remove the screws securing the switch to the facia panel.

5. Fit the new switch, ensuring that it is correctly positioned and reassemble in reverse order.

© Baxi Heating UK Ltd 2011

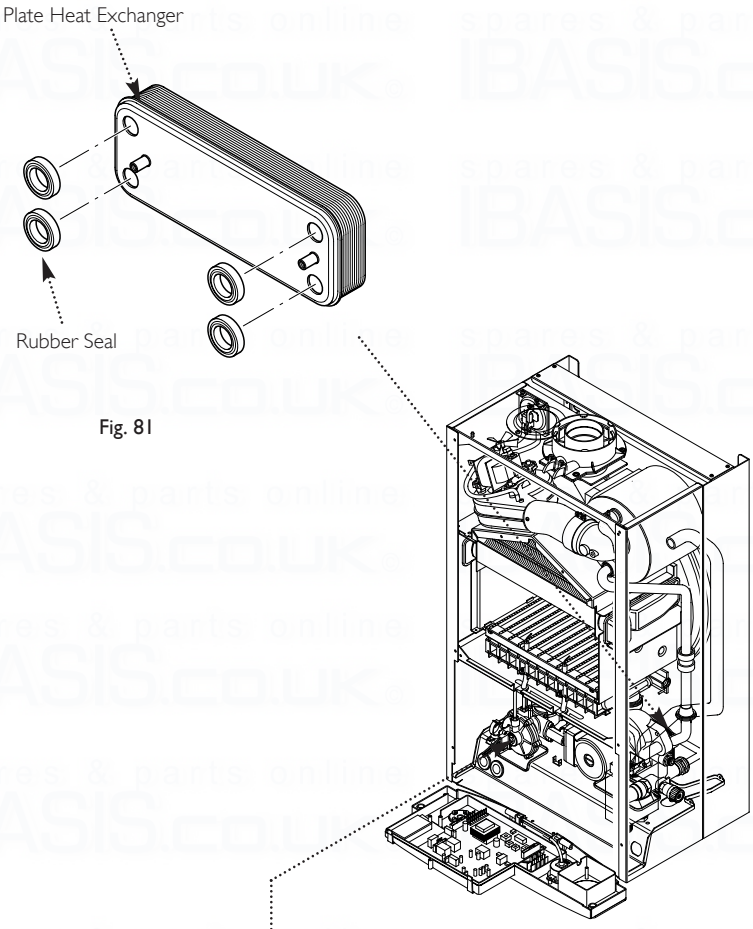


Fig. 81

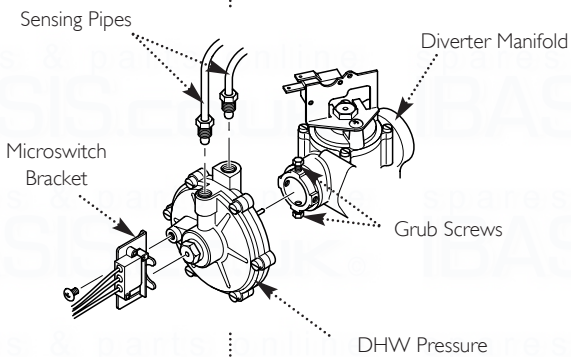


Fig. 82

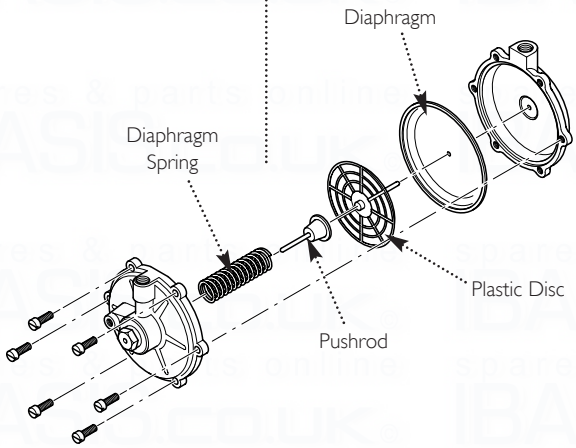


Fig. 83

## 14.20 Plate Heat Exchanger (Fig. 67)

1. Drain the primary circuit.

2. While supporting the heat exchanger undo the screws securing it to the brass manifolds.

3. Withdraw the heat exchanger upwards and to the left of the gas valve, taking care not to damage any wires or controls.

**Seals**

4. There are four rubber seals between the manifolds and heat exchanger which may need replacement.

5. Ease the seals out of the manifold. Replace carefully, ensuring that the seal is inserted into the manifold parallel and pushed fully in.

6. When fitting the new heat exchanger note that the left hand location stud is offset towards the centre more than the right hand one.

7. Reassemble in reverse order.

## 14.21 Diverter Valve Assembly (Figs. 82 & 83)

The diverter valve assembly comprises of a central heating pressure differential valve and a domestic hot water pressure differential valve. These are connected to a manifold which is joined to the plate heat exchanger.

**DHW Pressure Differential Valve** (Fig. 83)

1. Drain the primary circuit.

2. Undo the screw securing the microswitch bracket to the valve (Fig. 82).

3. Disconnect the two sensing pipes and slacken the grub screws securing the valve to the diverter manifold.

4. Draw the valve away from the diverter manifold. The valve may now be replaced or split to examine the diaphragm.

5. To examine the diaphragm hold the valve body securely and carefully remove the six screws. The diaphragm spring will force apart the two halves of the valve.

6. Remove the plastic disc and pushrod assembly. Carefully examine the diaphragm and replace it if there is any damage.

7. Reassemble in reverse order.

 © Baxi Heating UK Ltd 2011

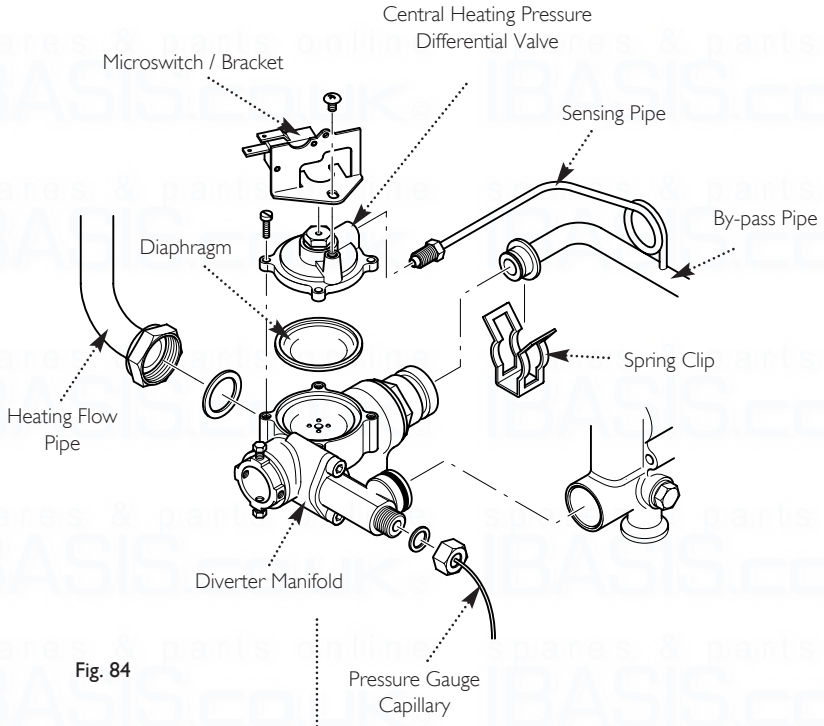


Fig. 84

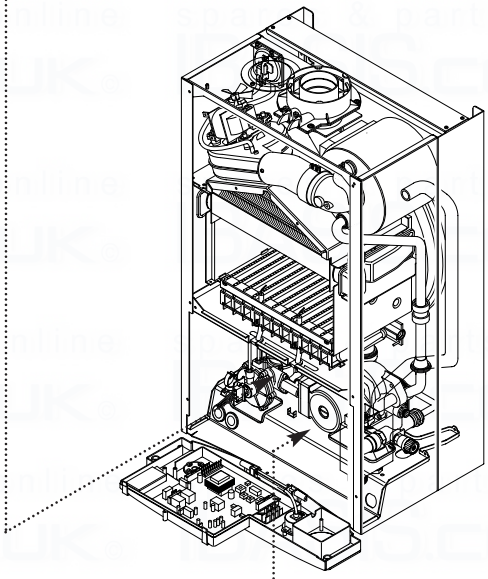

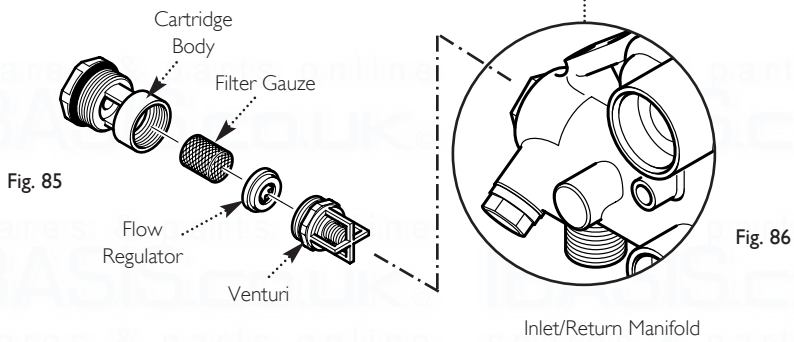


Fig. 85

Fig. 86

## 14.21 Diverter Valve Assembly (Cont)

**Pressure Differential Valve** (Fig. 84)

1. Remove the pressure differential valve as described above.

2. From the brass diverter manifold undo the nut on the heating flow pipe. Remove the screw securing the diverter manifold to the appliance lower bracket.

3. Disconnect the pressure gauge capillary from the diverter manifold and remove the two wires from the microswitch.

4. Prise off the spring clip securing the by-pass pipe to the diverter manifold and disconnect the sensing pipe.

5. Ease the diverter manifold out of the plate heat exchanger manifold. Remove the assembly from the appliance.

6. Undo the screw securing the microswitch bracket to the valve body. The sensor may now be dismantled to examine the diaphragm.

7. To examine the diaphragm hold the assembly securely and carefully remove the four screws. The diaphragm spring will force the two halves of the valve apart.

8. Carefully examine the diaphragm and replace it if there is any damage.

9. Reassemble in reverse order.

**CH Pressure Microswitch** (Fig. 84)

1. Remove the two wires from the Pressure microswitch.

2. Undo the screw securing the microswitch bracket to the valve body.

3. Reassemble in reverse order.

## 14.22 Flow Regulator (Figs. 85 & 86)

1. Undo the filter cartridge from the inlet/return manifold.

2. Unscrew the venturi and remove the flow regulator.

3. Check the cleanliness of the filter gauze, rinsing thoroughly in clean water as necessary. Fit the new flow regulator and reassemble in reverse order.

© Baxi Heating UK Ltd 2011

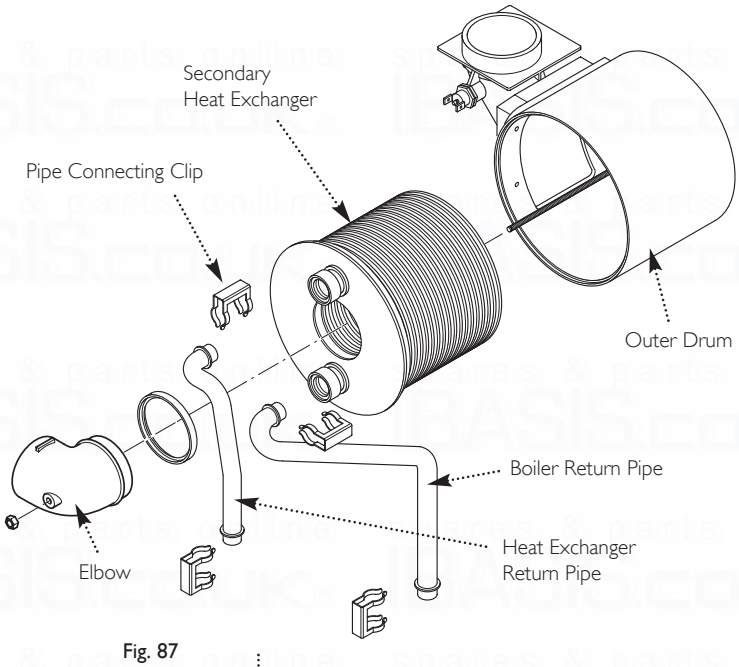


Fig. 87

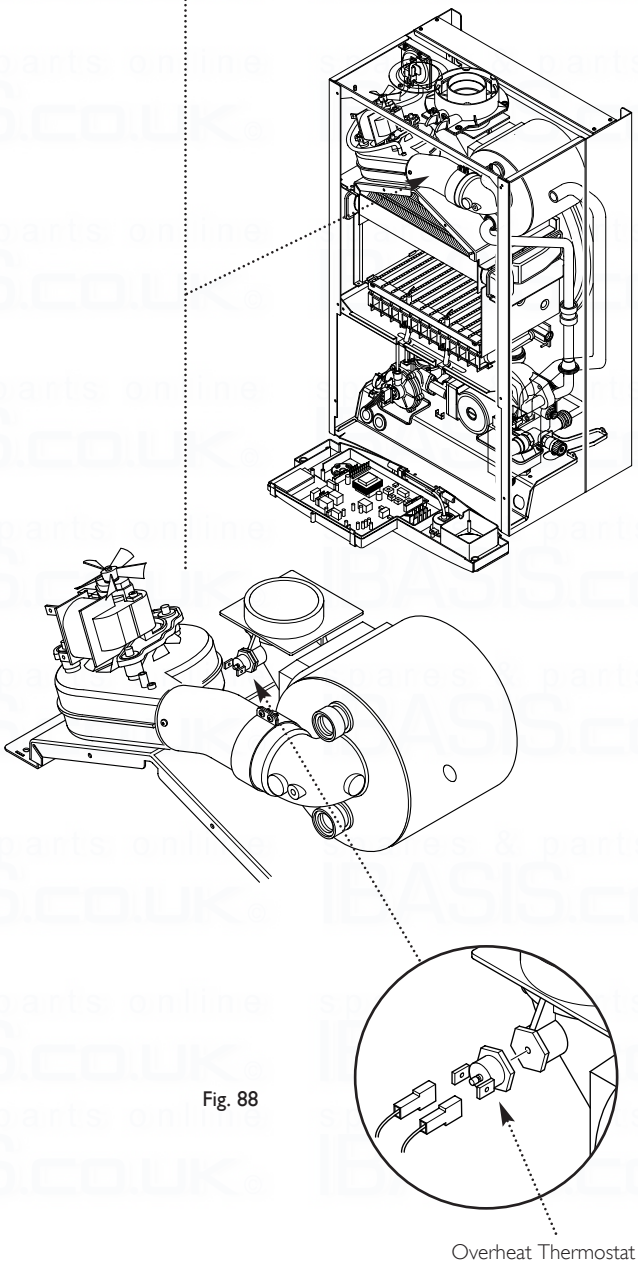


Fig. 88

## 14.23 Secondary Heat Exchanger (Fig. 87)

1. Drain the primary circuit

2. Undo the four screws securing the right hand case panel. Remove the panel.

3. Prise the connecting clips from the heat exchanger return pipe and the boiler return pipe. Remove the pipes.

4. Remove the fan and hood assembly as described in Section 14.1

5. Remove the nut securing the elbow to the secondary heat exchanger. Draw the elbow and outlet pipe forwards.

6. Remove the secondary heat exchanger from the outer drum by easing it forward.

7. Reassemble in reverse order of dismantling.

## 14.24 Flue Overheat Thermostat (Fig. 88)

**NOTE: The flue overheat thermostat includes a reset button. Check that the thermostat will not reset before replacing.**

1. Remove the fan and hood assembly as described in Section 14.1

2. Pull the two wires off the terminals on the flue overheat thermostat. Unscrew the thermostat from the adaptor in the outlet elbow.

3. Reassemble in reverse order of dismantling.

 © Baxi Heating UK Ltd 2011

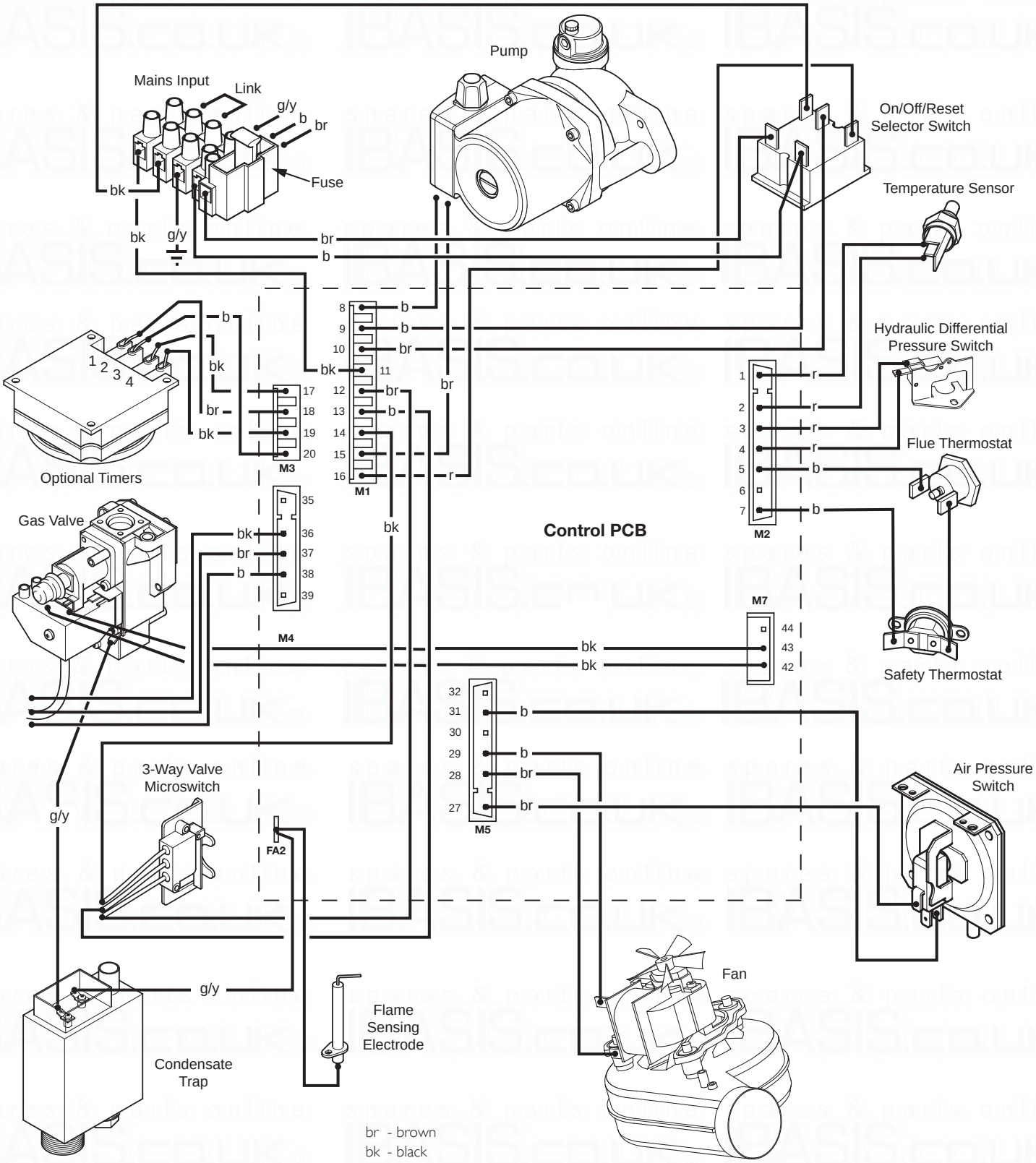


br - brown
bk - black
b - blue
r - red
y - yellow
g/y - green / yellow
w - white
gr - grey

© Baxi Heating UK Ltd 2011

**Carry out initial fault finding checks**

1. Check that gas, water and electrical supplies are available at the boiler. Electrical supply = 230V ~ 50 Hz.
   CH water system pressurised to 0.5 bar when the boiler is cold. The preferred minimum gas pressure is 19.5mbar (natural gas), or 36mbar (propane).
2. Carry out electrical system checks, i.e. Ground Continuity, Resistance to Ground, Short Circuit and Polarity with a suitable meter.
   **NOTE:** These checks must be repeated after any servicing or fault finding.
3. Ensure all external controls are calling for heat and check all external and internal fuses. Before any servicing or replacement of parts ensure the gas and electrical supplies are isolated.

Refer to Section 13.1 "Illustrated Wiring Diagram" for position of numbered terminals

**Central Heating -** Follow operational sequence

**NOTE:** When instructed to turn the Selector to the reset position turn the Selector Switch fully anticlockwise against the spring pressure and hold for 2 seconds to reset the boiler.

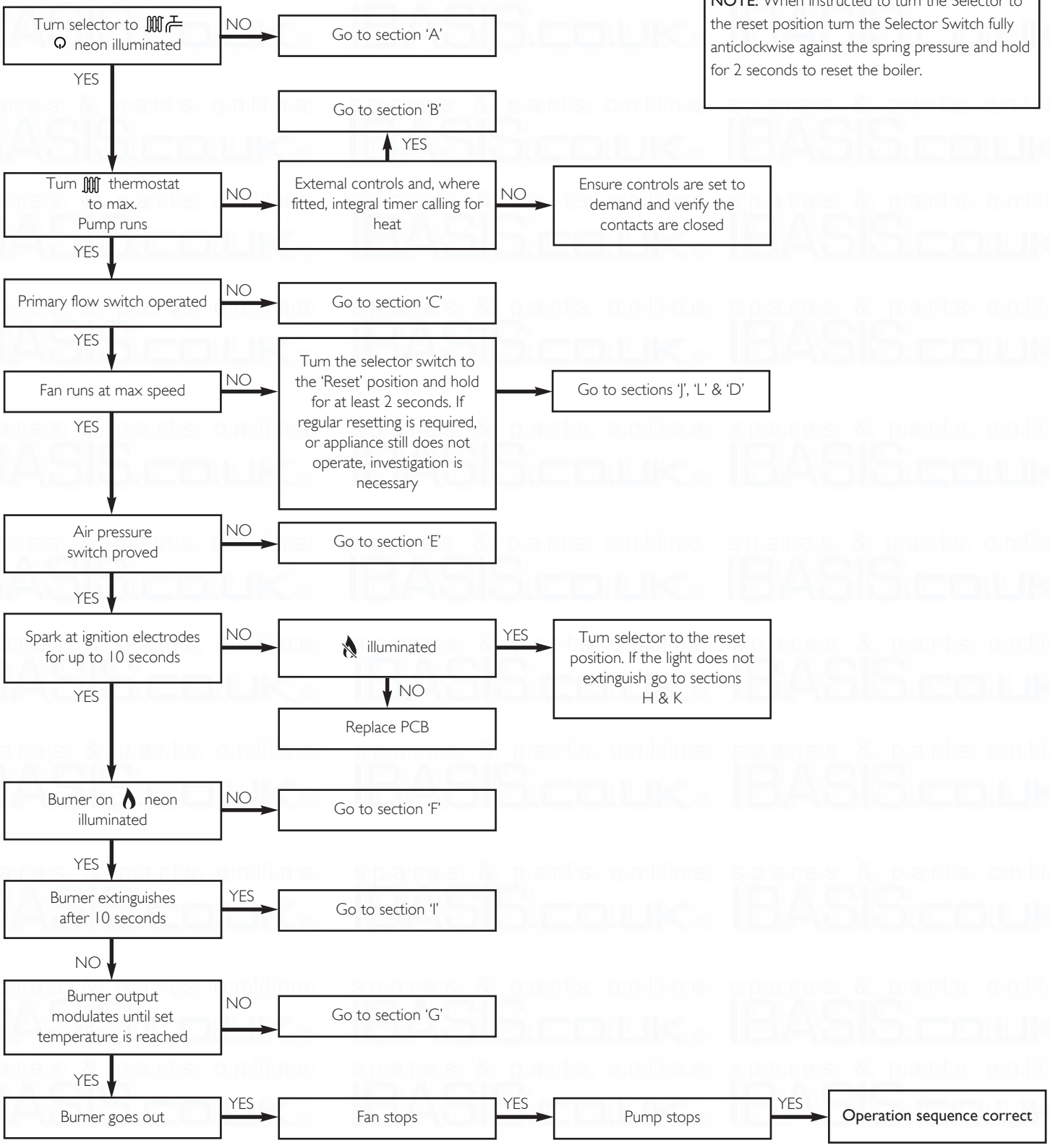


 © Baxi Heating UK Ltd 2011

**Domestic Hot Water -** Follow operational sequence

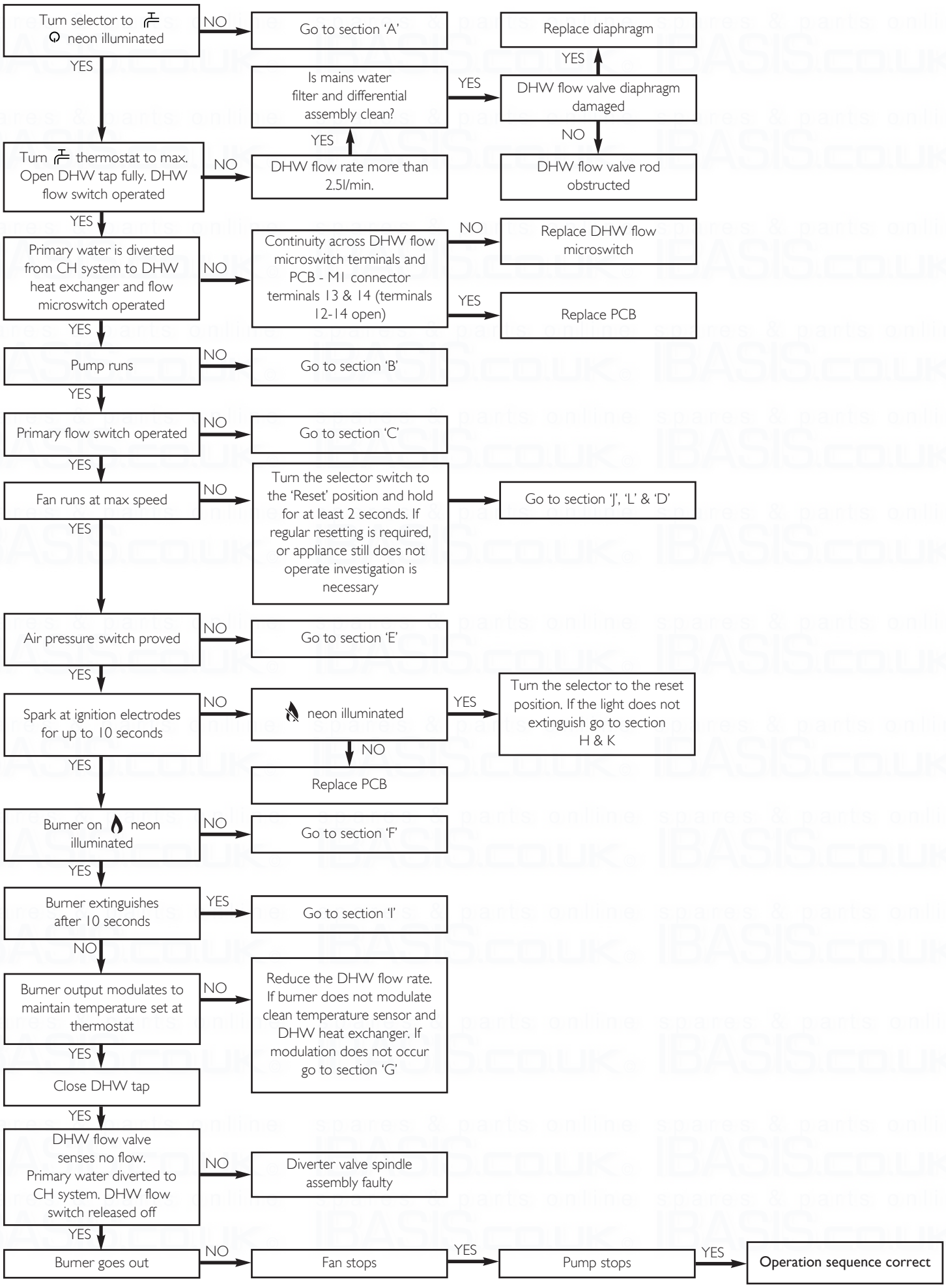


© Baxi Heating UK Ltd 2011

## A

Is there 230V at:

1. Main terminals L and N — NO → Check electrical supply
2. Main terminal fuse — YES → Replace fuse
3. Selector terminals a & b and a & 3. PCB - M1 connector terminals 9 & 10 — NO → Check wiring / Replace selector

→ neon illuminated — NO → Replace PCB

## B

Is there 230V at:

1. Pump — If pump jammed, release — NO → Replace pump
2. PCB - M1 connector terminals 8 & 15 — NO → Replace PCB
   - YES → Change pump supply cable

## C

1. CH system pressure 0.5 to 1.5 bar — NO → Re-pressurise system
2. Check the tap of the automatic air vent is opened — NO → Open the automatic air vent
3. Primary flow valve diaphragm damaged — YES → Replace diaphragm
   - NO → Flow valve rod obstructed

## D

1. Continuity across flow microswitch and PCB M2 connector terminals 3 & 4 — NO → Replace microswitch
2. Primary temperature sensor faulty. Cold resistance approx. 11K ohms (resistance reduces with increase in temp.) — YES → Replace sensor
3. Fan connections correct at fan. PCB - M5 connector, is 230V across terminals 28 & 29 — YES → Fan jammed or faulty winding — YES → Replace fan
   - NO → Replace PCB

## E

Check and correct if necessary
1. Electrical and pressure tube connections
2. Blockage of pressure tubes
3. Restriction in flue
4. Venturi

NO → Replace air pressure switch

## F

Gas at burner — NO → Ensure gas is on and purged

↓

PCB - M4 connector is approx 230V AC, terminals 36 & 38 — YES → Replace gas valve

↓ NO

neon illuminated — YES → Turn selector switch to 'Reset' position

↓ NO

Replace PCB


© Baxi Heating UK Ltd 2011

## G

1. Check the burner setting pressure of the gas valve (see Section 11.2 of Commissioning)

2. Voltage at modulating coil of gas valve is:
Max. burner press.approx 9V DC (13V DC LPG)
Min. burner press.approx 1V DC

Current at modulating coil of gas valve is:
(Use an instrument with average function for this measure)
30 ÷ 230 mA DC (45 ÷ 310 mA DC LPG)

YES → Replace gas valve

NO → Replace PCB

## H

Check and correct if necessary
1. Ignition electrode and lead
2. Electrode connection
3. Spark gap and position

YES → 230V at Main PCB - M4 connector across terminals 37 & 38. Check wiring

NO → Replace PCB

YES → Replace gas valve electrical plug/igniter assy

## I

Ensure that mains input terminal L is Live (230V) and N is Neutral (0V)

YES ↓

Check and correct if necessary
1. Flame sensing electrode and lead connections
2. Electrode position

Flame current should be 1 µ A approx.

YES → Replace PCB

NO → Replace flame sensing electrode

## J

Boiler overheat thermostat operated or faulty, i.e. continuity across thermostat terminals

NO → Allow to cool. Continuity across thermostat terminals more than 1.5 ohm

YES → Replace boiler overheat thermostat

YES → Replace PCB

## K

Check terminal 1 of ON/OFF/RESET selector is in connection with PCB - M1 connector terminal 16
Check electrical continuity across terminals 1 & a of ON/OFF/RESET selector when turned to 'Reset' position

NO → Replace ON/OFF/RESET selector

YES → Replace PCB

## L

Press the reset button on the flue overheat thermostat. If the boiler does not relight or repeatedly cuts out check the operation of the flue system or replace the flue overheat thermostat. If the flue overheat thermostat has not been activated see section 'D'

© Baxi Heating UK Ltd 2011

## 17.0 Fault Indication Display

1. The boiler has three neon indicators. The upper two function as boiler on and fault indicators.

2. Depending on the nature of the fault the upper two neons will illuminate, go off or flash.

3. There are five possible combinations, each indicating one or more fault conditions. These are described below.

A
The flue or flue terminal is blocked or obstructed in some way, or there is an internal fault.

B
The circulating pump is faulty or the system pressure has dropped. Check the system pressure. If the pressure is in the normal range a pump fault is indicated.

C
A fault on the boiler temperature sensor is indicated.

D
The primary system or the boiler has overheated. Allow the boiler to cool. Turn the selector switch fully anti-clockwise against the spring pressure to the 'Reset' position and hold for at least 2 seconds.
If the boiler does not relight after resetting it is possible that the flue has overheated.

E
The burner has failed to light, or incomplete lighting of the burner has occurred. Turn the selector switch fully anti-clockwise against the spring pressure to the 'Reset' position and hold for at least 2 seconds.
If the boiler does not relight after resetting blockage of the condensate drain or trap has occurred.

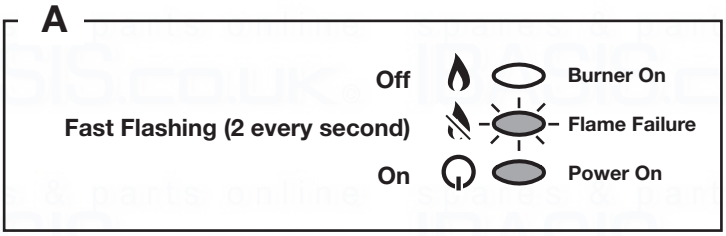


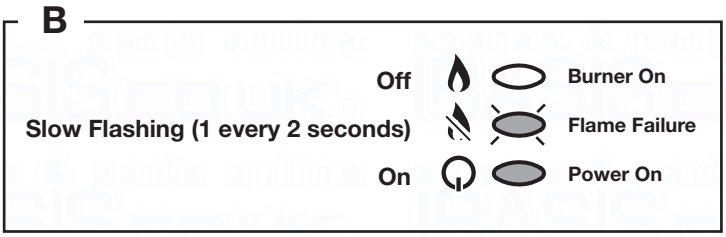


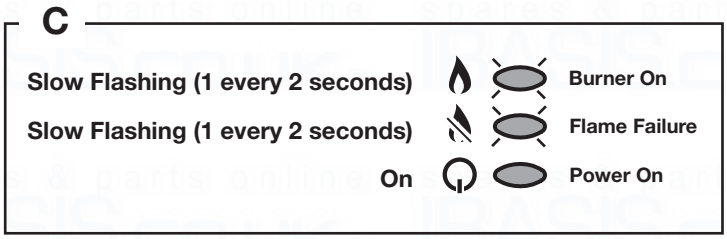


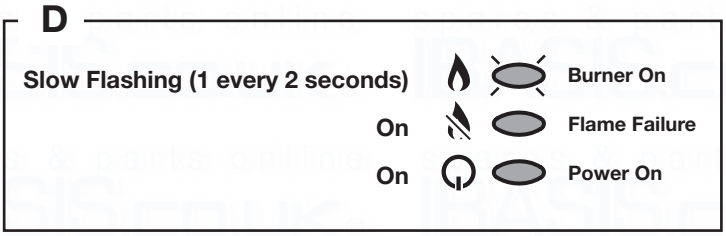


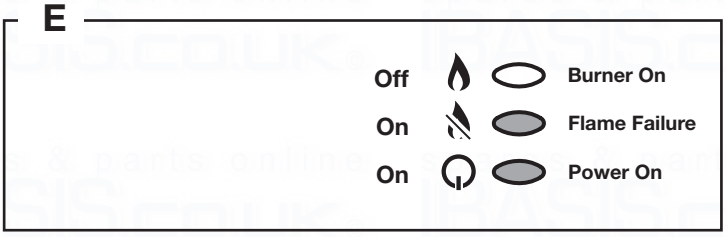


 © Baxi Heating UK Ltd 2011

# 18.0 Short Parts List

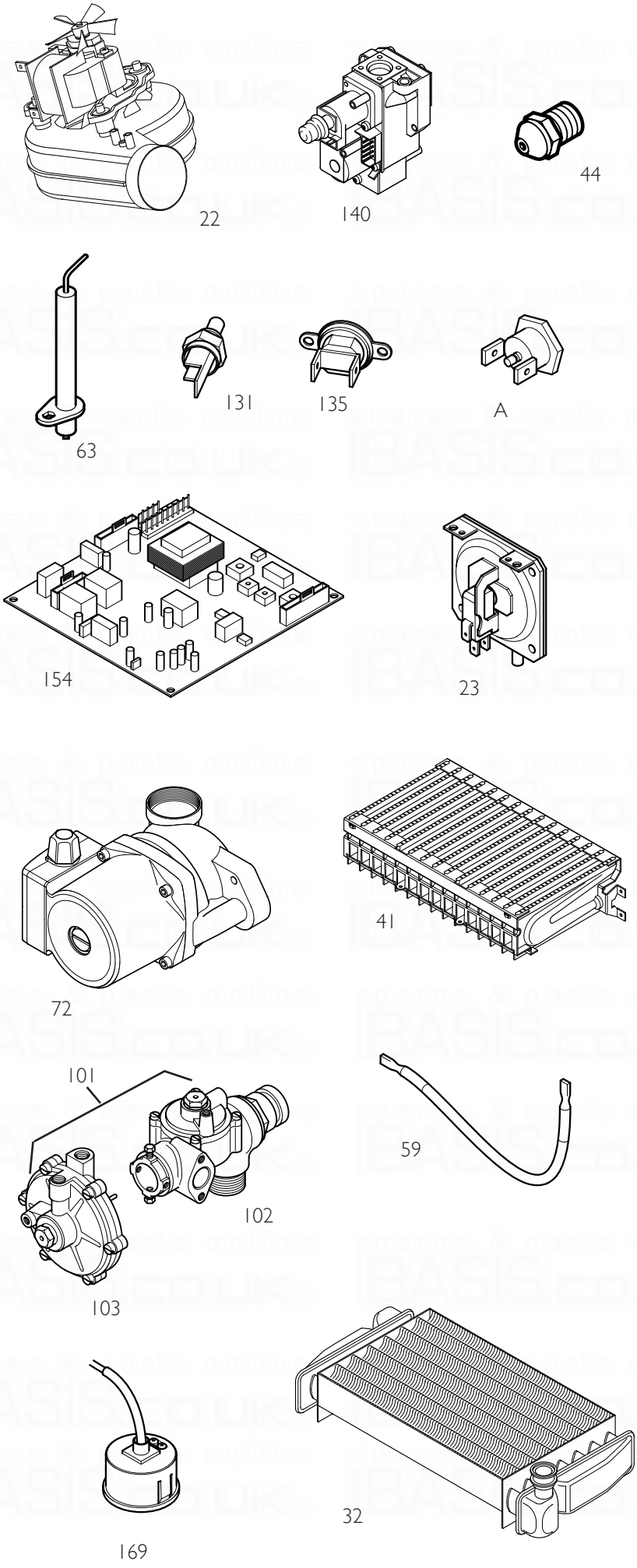


## Short Parts List

| Key No. | G.C. No. | Description | Manufacturers Part No. |
|---|---|---|---|
| 22 | | Fan | 5112627 |
| 23 | | Pressure Switch | 5112999 |
| 32 | | Heat Exchanger | 5112431 |
| 41 | | Burner | 5112770 |
| 44 | E66 402 | Injector - 1.18 NG | 248210 |
| 59 | E66 408 | Electrode Lead | 248037 |
| 63 | E66 411 | Spark or Sensing Electrode | 247384 |
| 72 | | Pump | 248042 |
| 101 | E66 432 | Hydraulic Outlet Assy. | 248061 |
| 102 | E66 434 | Valve - 3 Way Assy. | 248062 |
| 103 | 343 619 | Pressure Differential Assy. | 248063 |
| 131 | | Temperature Sensor | 5108265 |
| 135 | E66 697 | Safety Limit Thermostat | 248078 |
| 140 | | Gas Valve | 5107339 |
| 154 | | PCB | 5112657 |
| 169 | E66 453 | Pressure Gauge | 248090 |
| 371 | | Igniter/Gas Valve Cable | 5112385 |
| A | | Flue Overheat Thermostat | 5112395 |

© Baxi Heating UK Ltd 2011

# GAS BOILER SYSTEM COMMISSIONING CHECKLIST

This Commissioning Checklist is to be completed in full by the competent person who commissioned the boiler as a means of demonstrating compliance with the appropriate Building Regulations and then handed to the customer to keep for future reference.

Failure to install and commission according to the manufacturer's instructions and complete this Benchmark Commissioning Checklist will invalidate the warranty. This does not affect the customer's statutory rights.

Customer Name ______ Telephone Number ______

Address ______

Boiler Make and Model ______

Boiler Serial Number ______

Commissioned by *(print name)* ______ Gas Safe Register Number ______

Company Name ______ Telephone Number ______

Company Address ______

______ Commissioning Date ______

**To be completed by the customer on receipt of a Building Regulations Compliance Certificate*:**

Building Regulations Notification Number *(if applicable)* ______

## CONTROLS Tick the appropriate boxes

| | | | | |
|---|---|---|---|---|
| Time and Temperature Control to Heating | Room Thermostat and Programmer/Timer ☐ | Programmable Room Thermostat ☐ | Load/Weather Compensation ☐ | Optimum Start Control ☐ |
| Time and Temperature Control to Hot Water | | | Cylinder Thermostat and Programmer/Timer ☐ | Combination Boiler ☐ |
| Heating Zone Valves | | | Fitted ☐ | Not Required ☐ |
| Hot Water Zone Valves | | | Fitted ☐ | Not Required ☐ |
| Thermostatic Radiator Valves | | | Fitted ☐ | Not Required ☐ |
| Automatic Bypass to System | | | Fitted ☐ | Not Required ☐ |
| Boiler Interlock | | | | Provided ☐ |

## ALL SYSTEMS

The system has been flushed and cleaned in accordance with BS7593 and boiler manufacturer's instructions Yes ☐

What system cleaner was used? ______

What inhibitor was used? ______ Quantity ☐ *litres*

## CENTRAL HEATING MODE Measure and Record:

Gas Rate ☐ $m^3/hr$ OR ☐ *$ft^3/hr$*

Burner Operating Pressure (if applicable) ☐ mbar OR Gas Inlet Pressure ☐ mbar

Central Heating Flow Temperature ☐ °C

Central Heating Return Temperature ☐ °C

## COMBINATION BOILERS ONLY

Is the installation in a hard water area (above 200ppm)? Yes ☐ No ☐

If yes, and if required by the manufacturer, has a water scale reducer been fitted? Yes ☐ No ☐

What type of scale reducer has been fitted? ______

**DOMESTIC HOT WATER MODE Measure and Record:**

Gas Rate ☐ $m^3/hr$ OR ☐ *$ft^3/hr$*

Burner Operating Pressure (at maximum rate) ☐ mbar OR Gas Inlet Pressure (at maximum rate) ☐ mbar

Cold Water Inlet Temperature ☐ °C

Hot water has been checked at all outlets Yes ☐ Temperature ☐ °C

Water Flow Rate ☐ *l/min*

## CONDENSING BOILERS ONLY

The condensate drain has been installed in accordance with the manufacturer's instructions and/or BS5546/BS6798 Yes ☐

If the condensate pipe terminates externally has the pipe diameter been increased and weatherproof insulation fitted? Yes ☐

## ALL INSTALLATIONS

If required by the manufacturer, record the following $CO_2$ ☐ % OR CO ☐ *ppm* OR $CO/CO_2$ Ratio ☐

The heating and hot water system complies with the appropriate Building Regulations Yes ☐

The boiler and associated products have been installed and commissioned in accordance with the manufacturer's instructions Yes ☐

The operation of the boiler and system controls have been demonstrated to and understood by the customer Yes ☐

The manufacturer's literature, including Benchmark Checklist and Service Record, has been explained and left with the customer Yes ☐

Commissioning Engineer's Signature ______

Customer's Signature ______

*(To confirm satisfactory demonstration and receipt of manufacturer's literature)*

*All installations in England and Wales must be notified to Local Authority Building Control (LABC) either directly or through a Competent Persons Scheme. A Building Regulations Compliance Certificate will then be issued to the customer.

benchmark COLLECTIVE MARK

THE MARK OF QUALITY FOR THE INSTALLATION, COMMISSIONING AND SERVICING OF DOMESTIC HEATING AND HOT WATER SYSTEMS



©Heating and Hotwater Industry Council (HHIC)

# Service Record

It is recommended that your heating system is serviced regularly and that the appropriate Service Interval Record is completed.

**Service Provider**
Before completing the appropriate Service Record below, please ensure you have carried out the service as described in the manufacturer's instructions.

Always use the manufacturer's specified spare part when replacing controls.

**Service 1** Date:
Engineer Name:
Company Name:
Telephone No.
Gas Safe Register No.
Comments:
Signature:

**Service 2** Date:
Engineer Name:
Company Name:
Telephone No.
Gas Safe Register No.
Comments:
Signature:

**Service 3** Date:
Engineer Name:
Company Name:
Telephone No.
Gas Safe Register No.
Comments:
Signature:

**Service 4** Date:
Engineer Name:
Company Name:
Telephone No.
Gas Safe Register No.
Comments:
Signature:

**Service 5** Date:
Engineer Name:
Company Name:
Telephone No.
Gas Safe Register No.
Comments:
Signature:

**Service 6** Date:
Engineer Name:
Company Name:
Telephone No.
Operative ID No.
Comments:
Signature:

**Service 7** Date:
Engineer Name:
Company Name:
Telephone No.
Gas Safe Register No.
Comments:
Signature:

**Service 8** Date:
Engineer Name:
Company Name:
Telephone No.
Gas Safe Register No.
Comments:
Signature:

**Service 9** Date:
Engineer Name:
Company Name:
Telephone No.
Gas Safe Register No.
Comments:
Signature:

**Service 10** Date:
Engineer Name:
Company Name:
Telephone No.
Gas Safe Register No.
Comments:
Signature:

All descriptions and illustrations provided in this leaflet have been carefully prepared but we reserve the right to make changes and improvements in our products which may affect the accuracy of the information contained in this leaflet. All goods are sold subject to our standard Conditions of Sale which are available on request.

POTTERTON
A Trading Division of Baxi Heating UK Ltd (3879156)
Brooks House, Coventry Road, Warwick. CV34 4LL
After Sales Service 0844 871 1560 Technical Enquiries 0844 871 1555
Website www.potterton.co.uk
e&oe

PART OF BDR THERMEA

© Baxi Heating UK Ltd 2011

UK Comp N° 5111811 - Iss 8 - 2/11