POTTERTON

Performa 28i

Gas Fired Wall Mounted Combination Boiler

User's Operating Instructions

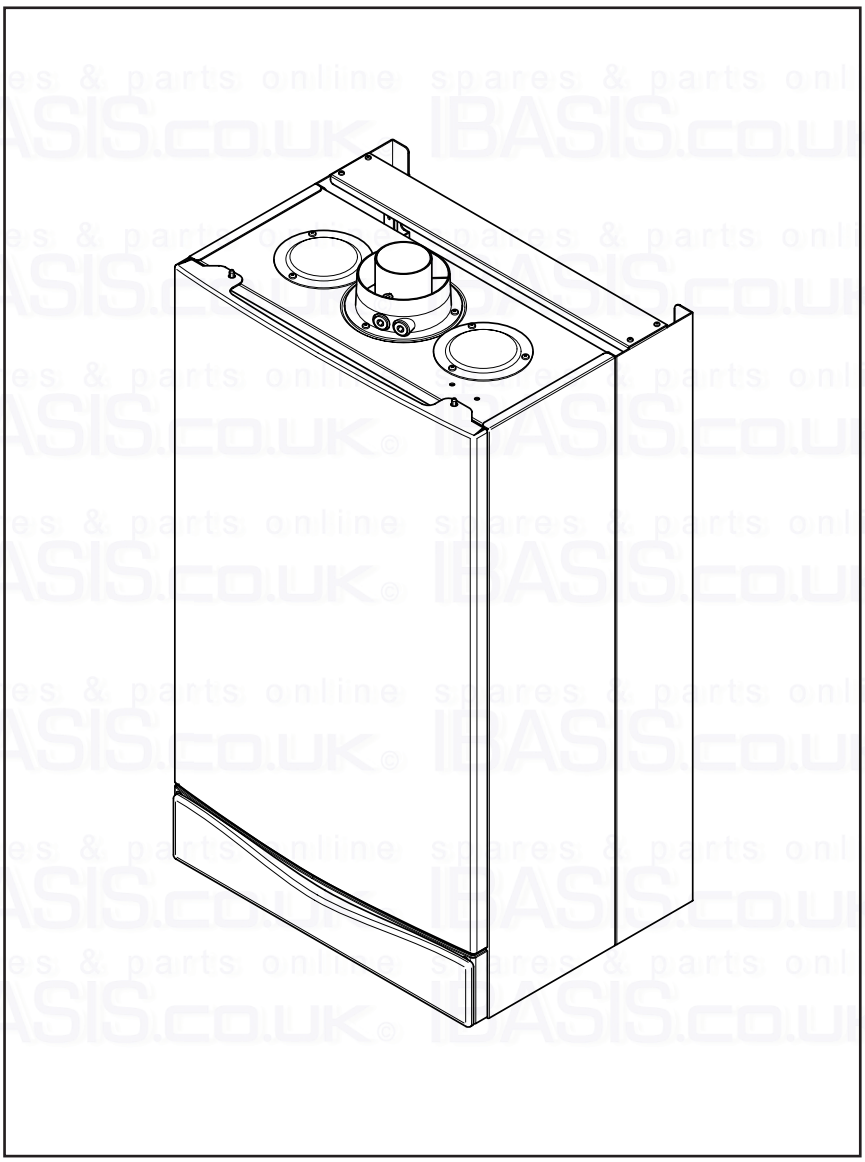

Please keep these instructions safe. Should you move house, please hand them over to the next occupier.

spares & parts online IBASIS.CO.UK

Natural Gas

Potterton Performa 28i
G.C.N° 47 393 08

IPX5D

Guarantee

Your Potterton Performa 28i is designed and produced to meet all the relevant Standards.

Potterton provide a 12 month guarantee on the boiler. The guarantee operates from the date installation is completed for the customer who is the original user.

To maximise the benefit from our guarantee we urge you to return the reply-paid guarantee registration.

This does not in any way prejudice your rights at Common Law. Such rights between the customer and the installer or supplier from whom the unit was purchased remain intact.

Any component or part which becomes defective during the guarantee period as a result of faulty workmanship or material whilst in normal use will be repaired or replaced free of charge.

The boiler meets the requirements of Statutory Instrument " The Boiler (Efficiency) Regulations 1993 N° 3083" and is deemed to meet the requirements of Directive 92/42/EEC on the energy efficiency requirements for new hot water boilers fired with liquid or gaseous fuels:-

Type test for purpose of Regulation 5 certified by:
Notified Body 0051.

Product/Production certified by:
Notified Body 0051.

For GB/IE only.

STANDARD	SCOPE
B.S. 6891	Gas Installation.
B.S. 5440: Pt 1	Flues.
B.S. 5440: Pt 2	Air Supply.
B.S. 5546	Installation of hot water supplies for domestic purposes.
B.S. 7074	Expansion vessels and ancillary equipment for sealed water systems.
B.S. 5449	Forced circulation hot water systems.
B.S. 6798	Installation of gas fired hot water boilers.

Where fitted, user label for optional timer to be applied here.

"Benchmark" Installation, Commissioning and Service Record Log Book

Please ensure that your installer has completed the Installation and Commissioning sections of the Log Book and hands the Log Book over. The details of the Log Book will be required in the event of any warranty work. Keep the Log Book in a safe place and ensure that the relevant sections are completed at each subsequent regular service visit.

All CORGI registered installers carry a CORGI identification card and have a registration number. Both should be recorded in your boiler Log Book. You can check your installer is registered by telephoning 01256 372300 or writing to:-
1 Elmwood,
Chineham Business Park,
Crockford Lane,
Basingstoke.
RG24 8WG.

IN AN EMERGENCY

If a water or gas leak occurs or is suspected, the boiler can be isolated at the inlet valves as follows;

1. Turn off the electrical supply and turn the selector switch on the facia box to the OFF position.

2. Using a suitable open ended spanner or screwdriver turn the square on the gas tap to the left to isolate the gas supply at the boiler (Fig. 1).

3. The isolating valves are positioned under the boiler and can be closed by turning their taps to the right towards the wall (Fig. 2).

4. Call your Service Engineer as soon as possible.

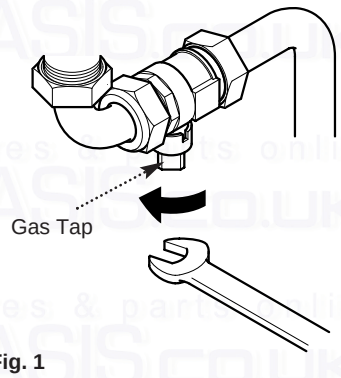

Fig. 1

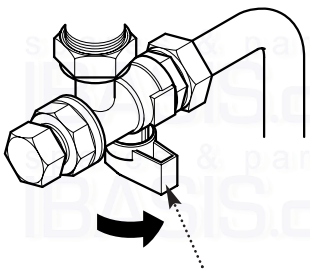

Fig. 2

Heating Flow, Heating Return and Mains Water Inlet Isolating Valves

1.0 Warnings

1.1 Safe Installation

1. The appliance is suitable for installation only in G.B. and I.E. and should be installed in accordance with the rules in force. For Ireland install in accordance with I.S.813 **"Installation of Gas Appliances"**. The installation must be carried out by a CORGI Registered Installer or other registered competent person and be in accordance with the relevant requirements of **Gas Safety** (Installation and Use) **Regulations** most recent edition, the **Building Regulations** issued by the Department of the Environment, **Building Standards** (Scotland) (Consolidation) **Regulations** issued by the Scottish Development Department and the **Local Building Regulations.** Where no specific instructions are given, reference should be made to the relevant **BRITISH STANDARD CODES OF PRACTICE and INSTALLATION SPECIFICATIONS.**

2. **This appliance must be installed in accordance with the manufacturer's instructions and the rules in force, and only used in a suitably ventilated location.**

3. **Read the instructions before installing or using this appliance.**

4. Any purpose provided ventilation should be checked periodically to ensure that it is free from obstruction.

IMPORTANT - The addition of anything that may interfere with the normal operation of the appliance without express written permission could invalidate the appliance warranty and infringe the **Gas Safety** (Installation and Use) **Regulations**.

1.2 In case of gas leaks

1. If a gas leak is found or suspected, turn off the gas supply at the meter immediately and at the isolating valve on the boiler if possible. Contact your Installer or Transco (under 'Gas' in the phone directory).

1.3 Servicing your Appliance

1. For reasons of safety and economy your appliance should be serviced annually. Servicing must be performed by a competent person. Your Installer or British Gas Service will be able to advise you.

1.4 Electricity Supply

1. **THIS APPLIANCE MUST BE EARTHED.**

2. A standard 230V ~ 50Hz supply is required. The appliance must be protected by a 3 amp fuse.

Never Hang Flammable Items Over The Appliance

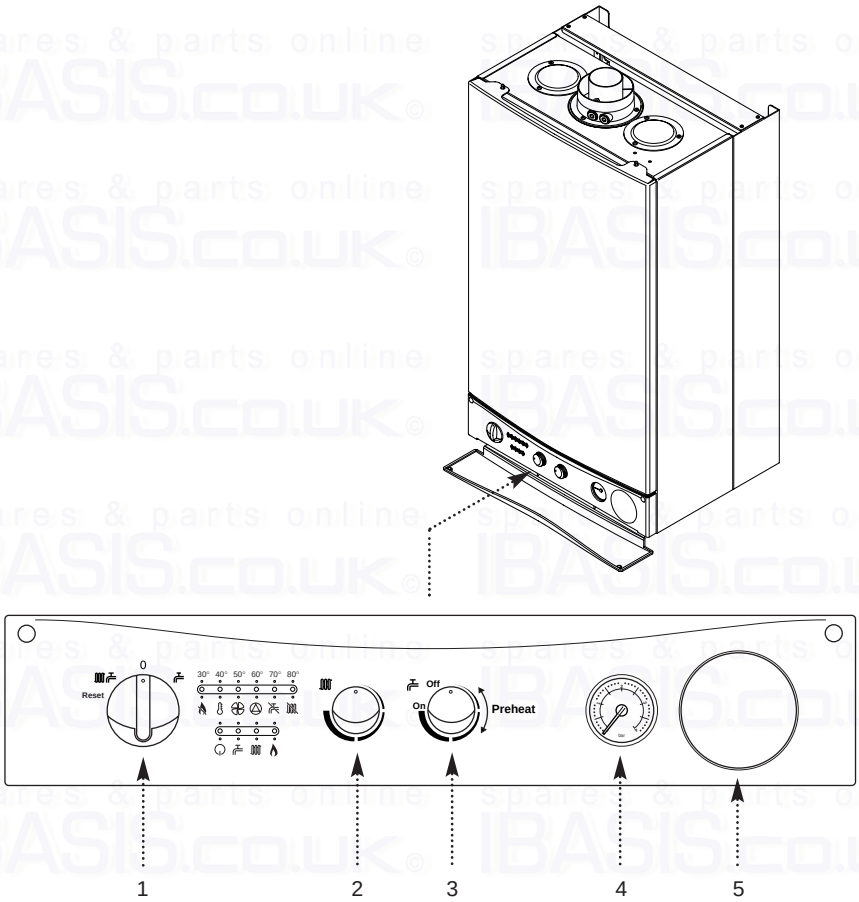

Fig. 3

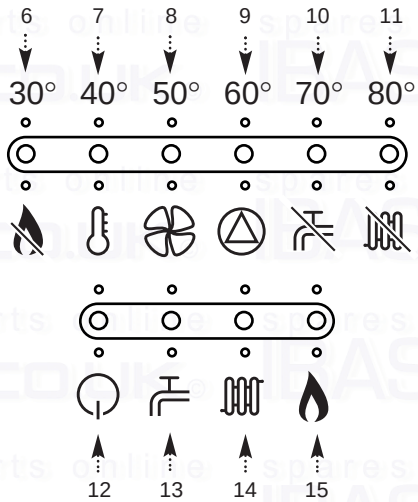

KEY TO FACIA PANEL (Fig. 3)

1. On/Off/Reset Selector Switch
2. Central Heating Temperature Control
3. Pre-Heat Control
4. Central Heating System Pressure Gauge
5. Optional Integral Timer Position

Neon Indicators

6. Flame Failure
7. Safety Thermostat Activated
8. Fault on Fan or Flue
9. Fault on Pump or Low System Pressure
10. Fault on Hot Water Sensor
11. Fault on Central Heating Sensor
12. Power On
13. Domestic Hot Water Mode
14. Central Heating Mode
15. Burner On

When neons 6 to 11 are constantly illuminated, they indicate the temperature of the central heating water.

2.0 Introduction

2.1 Introduction

1. Your Potterton Performa 28i is a gas fired, room sealed, powered flue combination boiler, providing central heating for your home and mains fed domestic hot water to taps and shower. It is fully automatic and does not have a pilot light.

2. Priority is given to the hot water mode - when a hot water tap is turned on the supply of heat to the central heating circuit is interrupted.

2.2 Instant Domestic Hot Water

1. The boiler expansion vessel incorporates a small volume of stored primary hot water.

2. When the boiler has been off and there is then a demand for domestic hot water the stored primary hot water ensures that domestic hot water is supplied instantly at temperature.

3. The stored hot water is part of the primary circuit. This is not supplied as domestic hot water, which is fresh mains water heated by a heat exchanger within the boiler.

4. The stored primary hot water temperature is maintained whilst the boiler is in operation. During a period when there is no demand for heating or hot water the temperature of the stored primary hot water will eventually fall. The boiler will operate occasionally in order to maintain the temperature. This is indicated by the domestic hot water mode neon flashing (item 13 of Fig. 3).

2.3 Facia Panel

1. The facia panel is behind the hinged lower door. As well as the on/off/reset selector switch, central heating temperature control knob, pre-heat control and pressure gauge, the facia incorporates ten neon indicator lights.

2. Neons 12 to 15 indicate the operational status of the boiler. Neons 6 to 11 have a dual function, indicating the temperature of the central heating water when constantly illuminated. If a fault develops the appropriate neon will begin to flash. Refer to Sections 3.3 to 3.7.

spares & parts online IBASIS.CO.UK

3.0 Operating the Boiler

3.1 Operating the Boiler

1. Ensure that the electricity and gas supplies are turned on. Check that the central heating pressure is between 0.5 and 1.0 bar (Fig. 4).

2. Turn the On/Off/Reset selector switch either anti-clockwise from the off position (Fig. 6) to both central heating and domestic hot water or clockwise to domestic hot water only.

3. In either position the green power on neon ( ) will illuminate (Fig. 5).

4. **Position (i)** In this position the central heating will operate according to demand or provide domestic hot water when a tap or shower is turned on (Fig. 7). Priority is given to domestic hot water. The central heating neon ( ) will illuminate when the boiler is supplying central heating. If there is a demand for domestic hot water the ( ) neon will illuminate and the central heating neon ( ) will extinguish (Fig. 5). Neons 6 to 11 will illuminate as the temperature rises.

5. **Position (ii)** In this position hot water will be provided when a tap or shower is turned on (Fig. 8). The hot water neon ( ) will illuminate (Fig. 5).

6. The boiler will light automatically on demand.

7. The orange burner on neon ( ) will illuminate when the boiler is operating and the main burner is on (Fig. 5).

IMPORTANT: When the selector switch is in the '0' (Off) position the electrical supply to the boiler is isolated. The boiler will not operate and the integral timer (if fitted) will require resetting once the selector switch is set to either Position (i) or Position (ii).

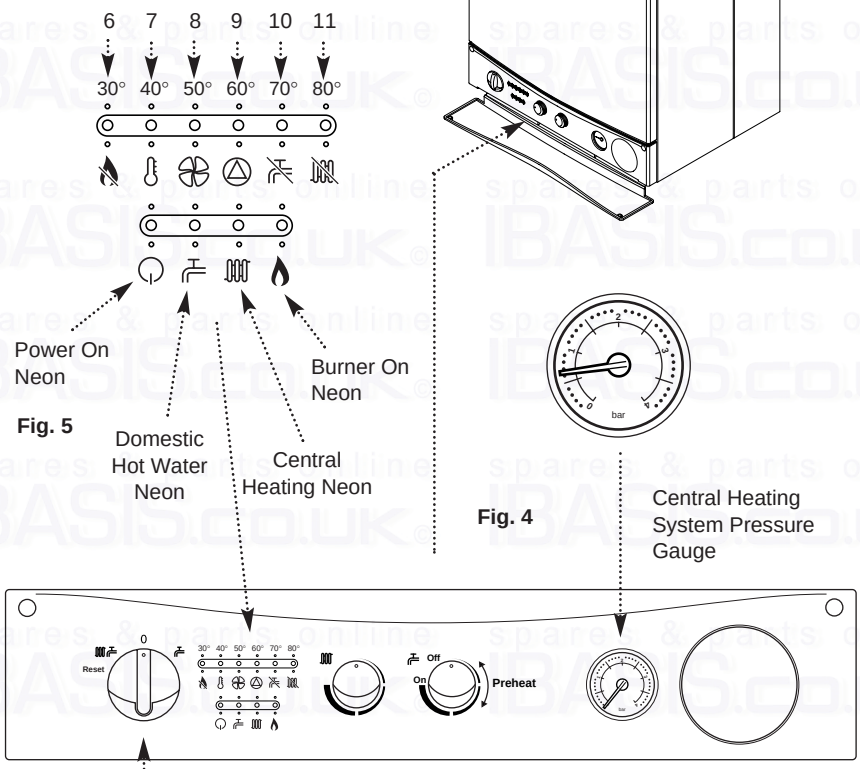

Fig. 5

Fig. 4

On/Off/Reset Selector Switch

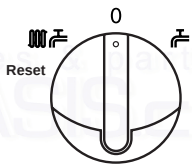

OFF Position

Fig. 6

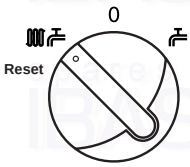

Position (i)
(Central Heating or Hot Water)

Fig. 7

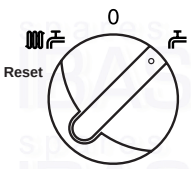

Position (ii)
(Hot Water)

Fig. 8

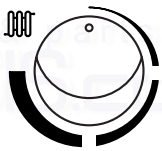

Fig. 9

Central Heating
Temperature Control

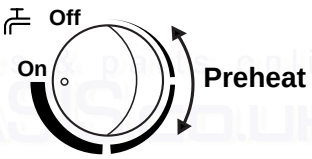

Fig. 10

Domestic Hot Water
Pre-Heat Control
ON Position

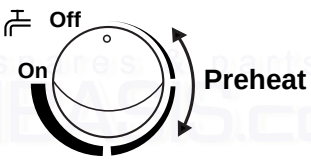

Fig. 11

Domestic Hot Water
Pre-Heat Control
OFF Position

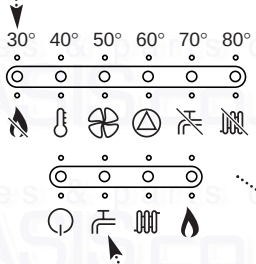

Fig. 12

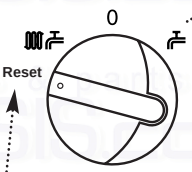

Fig. 13

3.2 Temperature Control

1. **Central Heating:** The central heating hot water flow temperature can be adjusted between 30° C (± 5° C) minimum and 85° C (± 5° C) maximum.

2. Turn the control knob clockwise to increase the temperature (Fig. 9).

3. In normal winter usage we recommend that the central heating temperature be set at maximum.

4. **Domestic Hot Water Pre-Heat:** To enjoy optimum performance of the boiler the pre-heat control should be set fully clockwise to the ON position (Fig. 10). When there is a demand for hot water it will be supplied at approximately 65° C instantaneously.

5. Turning the control 15° clockwise from the OFF position will activate the pre-heat feature. Hot water will be supplied at approximately 35° C instantaneously.

6. To increase the temperature turn the control further clockwise. For example, when set 90° clockwise the boiler will supply hot water at approximately 44° C instantaneously. At a position 180° from clockwise (i.e. straight down) the hot water will be supplied at 52° C instantaneously.

7. When the control is set anywhere between 15° clockwise from the OFF position and the ON position, the pre-heat feature will operate.

8. With the control in the OFF position (Fig. 11) the pre-heat feature will not operate. Hot water will be supplied at approximately 50° C.

9. The pre-heat feature will function with the selector switch in either operating position. This is indicated by the domestic hot water mode neon flashing (Fig. 12).

10. The flow rate can be reduced down to as low as 2.5 litre/min. The boiler will still recognise the need to heat the water.

3.3 Flame Failure Reset

1. The red flame failure neon ( ) will illuminate in the event of the burner failing to light, or when incomplete lighting of the burner occurs (Fig. 12).

2. Turn the selector switch fully anti-clockwise against the spring pressure to the reset position, hold for 2 seconds and release (Fig. 13). Set the selector to the required position to light the boiler.

3. If the flame failure light illuminates repeatedly a fault is indicated. Your Service Engineer should be contacted as soon as possible.

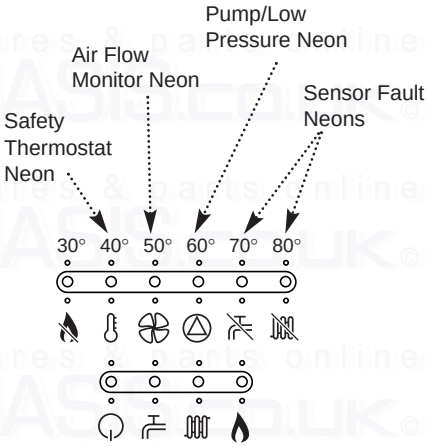

Fig. 14

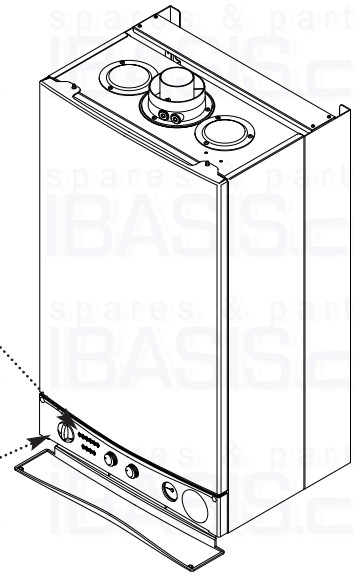

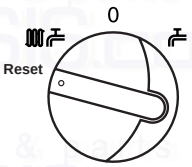

Reset Position

Fig. 15

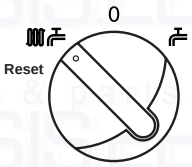

Fig. 16

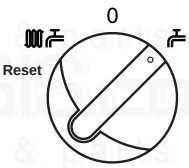

Fig. 17

3.4 Safety Thermostat

1. Your Potterton Performa 28i is fitted with an additional safety device, which shuts down the boiler in the event of the system or the boiler overheating. The safety thermostat neon ( ) will light in this instance (Fig. 14).

2. **To reset:** Turn the selector fully anti-clockwise against the spring pressure to the reset position, hold for 2 seconds and release (Fig. 15). Set the selector to the required position to light the boiler.

3. If the safety thermostat operates repeatedly, causing boiler shutdown, a fault is indicated. Your Service Engineer should be contacted as soon as possible.

3.5 Air Flow Monitor

1. The boiler is fitted with an air pressure sensing device. This monitors the flue system.

2. If the neon illuminates ( ) it indicates that the flue or flue terminal is blocked or obstructed in some way, or that there is an internal fault. If there is no external blockage of the flue terminal that can be easily removed contact your Service Engineer (Fig. 14).

3.6 Pump Fault or Low Pressure

1. The neon ( ) will illuminate if the circulating pump is faulty or the system pressure drops below the minimum requirement (Fig. 14).

2. Check the pressure gauge as described in Section 3.9. If the pressure is in the normal range, a pump fault is indicated. Contact your Service Engineer to determine the nature of the fault.

3.7 Sensor Fault

1. When the ( ) or ( ) neon is illuminated a fault on the hot water or central heating temperature sensor is indicated (Fig. 14). Contact your Service Engineer.

3.8 Pump Protection

1. With the selector switch in either Position (i) or Position (ii) (Figs. 16 & 17) the pump will automatically operate for 1 minute in every 24 hours to prevent sticking.

Pressure Gauge

Fig. 18
Normal Pressure (when cold)

Fig. 19
Normal Pressure (operating)

Fig. 20
Fault

Fig. 21
Below Minimum

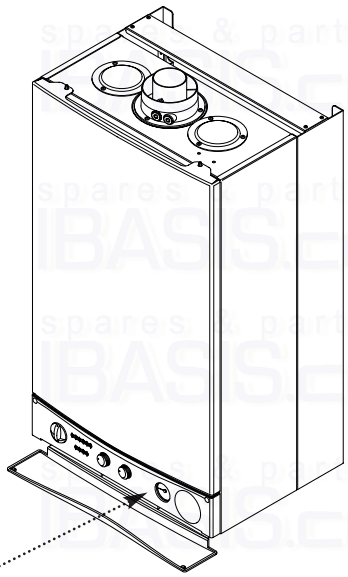

ON/OFF
Selector Switch

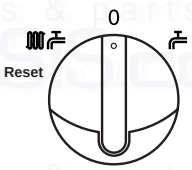

Fig. 22
OFF Position

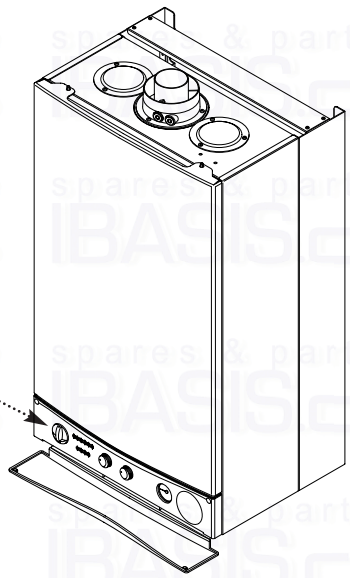

3.9 Central Heating System Pressure

1. The water pressure in the central heating system is indicated by the pressure gauge.

2. With the system cold and the boiler not operating the pressure should be between 0.5 and 1.0 bar. During operation the pressure should not exceed 2.5 bar, and will normally be between 1.0 and 2.0 (Figs. 18 & 19).

3. A pressure of 3 or greater indicates a fault. The safety pressure relief valve will operate, at a pressure of 3 (Fig. 20). **It is important that your Service Engineer is contacted as soon as possible.**

4. The MINIMUM pressure for correct operation is 0.5. If the pressure falls below 0.5, this may indicate a leak on the central heating system (Fig. 21).

5. The system must be re-pressurised by your Service Engineer.

3.10 To Shut Off the Boiler

1. **For short periods:** Turn the selector switch to the OFF position (Fig. 22).

2. **For long periods:** Turn off the selector switch (Fig. 22), electricity and gas supplies.

If your home is to be left unoccupied for long periods during cold weather the boiler and whole system should be drained unless there is additional frost protection.

3. Your installer will advise you about frost protection and draining the system.

IMPORTANT: When the selector switch is in the ‘0’ (Off) position the electrical supply to the boiler is isolated. The boiler will not operate and the integral timer (if fitted) will require resetting once the selector switch is set to either Position (i) or Position (ii).

3.11 Frost Protection Mode

1. The frost protection feature will operate when the selector switch is in the central heating and domestic hot water mode.
The gas and electrical supplies to the boiler must be on and the system pressure must be within the range described in Section 3.9.

2. If the system temperature falls below 5°C, then the boiler will fire until the water temperature has been raised.

3. Further frost protection can be incorporated by using a frost thermostat to protect the whole system.

4.0 Clearances and Check List

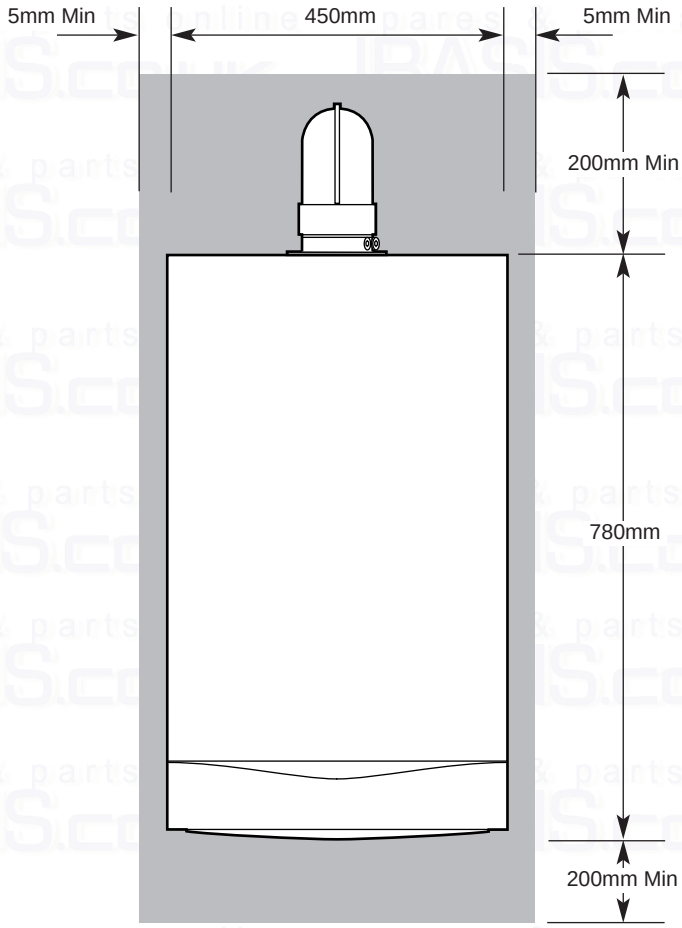

Fig. 23

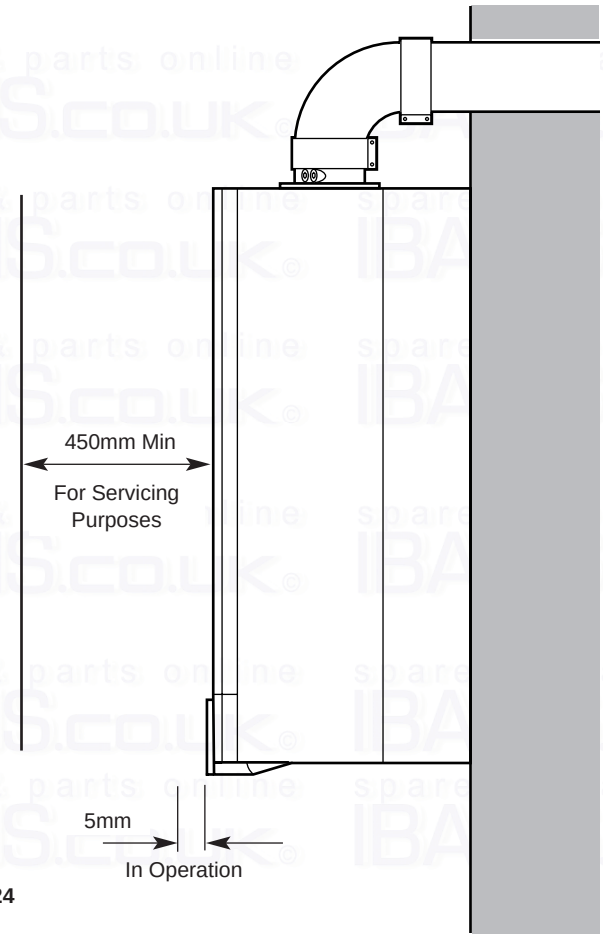

Fig. 24

4.1 Clearances around the Boiler

(Figs. 23 & 24)

1. The minimum clear spaces needed around the boiler measured from the casing are as follows:

Top	-	200mm	
Bottom	-	200mm	
Both sides	-	5mm	
Front	-	5mm	(In Operation)
	-	450mm	(For Servicing)

2. **These areas must not be obstructed in any way. Blocking the clearance spaces may result in the boiler overheating and damage may occur.**

3. The gas burning compartment of your boiler is completely sealed from the room in which it is fitted. Products from the combustion of gas are vented to the outside through the flue terminal which must be kept free from obstruction as this would interfere with the correct operation of the boiler.

4. The boiler may be installed in a cupboard if these minimum clearances are kept. The compartment should be large enough to house the boiler and ancillary equipment only.

5. **IT SHOULD NOT BE USED AS A STORAGE CUPBOARD.**

4.2 Check List

1. If a fault develops, or is suspected, call your Service Engineer as soon as possible.

2. Go through the following check list before you make contact.

a) Is the electricity supply on ?
b) Is the selector switch on (giving a green “Power ON” neon) and set for both Central Heating and Domestic Hot Water ?
c) Is the red “Flame Failure” neon lit ? Turn the On/Off/Reset selector fully anti-clockwise.
d) Is the gas supply on ?
e) Is the mains water supply turned on ?
f) Is the system pressure correct ?
g) Are the boiler temperature controls set high enough ?
h) Is the time clock (if fitted) calling for central heating ?
i) Is the room thermostat (if fitted) set high enough ?
j) Are the radiator valves open ?

5.0 Cleaning & Spares

5.1 Cleaning the Outercase

The painted panels should be wiped with a damp cloth and then dried completely. **DO NOT USE ABRASIVE CLEANING AGENTS.**

5.2 Spare Parts

IMPORTANT - Only a competent person should be used to service or repair this boiler.

1. Any repairs to the boiler will usually be the responsibility of the Installer during the guarantee period after which spare parts may be obtained through approved Potterton stockists if required.

2. Quote the appliance name, model number and where possible the part number when ordering spares. A parts list is included in the Installation and Servicing Instructions.

3. The name, model number and serial number can be found on the information label on the back of the hinged lower door (Fig. 25).

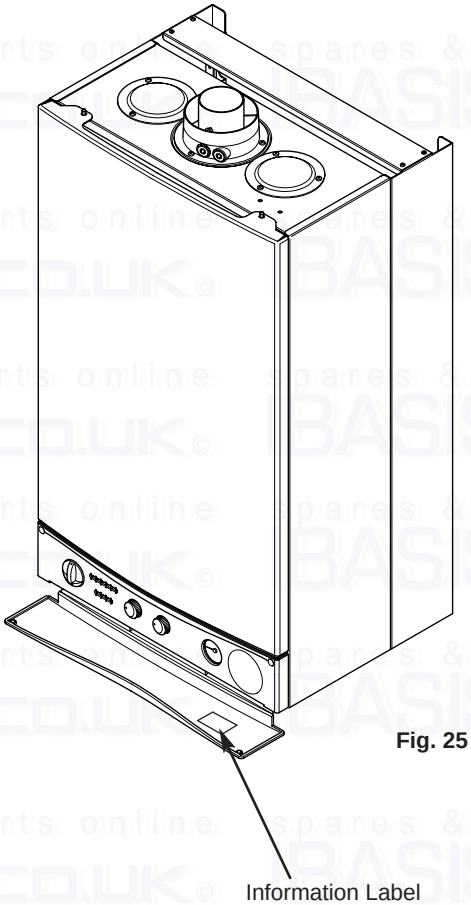

Fig. 25

spares & parts online IBASIS.CO.UK

6.0 Notes

spares & parts online IBASIS.CO.UK

spares & parts online IBASIS.CO.UK©

POTTERTON

Potterton, Baxi UK Limited, Brownedge Road, Bamber Bridge, Preston, Lancashire. PR5 6SN
After Sales Service 08706 096 096
www.baxi.com

Comp Nº 249109 - Iss 1 - 3/01