POTTERTON

# Performa System
# 12e, 18e, 24e & 28e

## Gas Fired Wall Mounted System Boilers

## Installation and Servicing Instructions

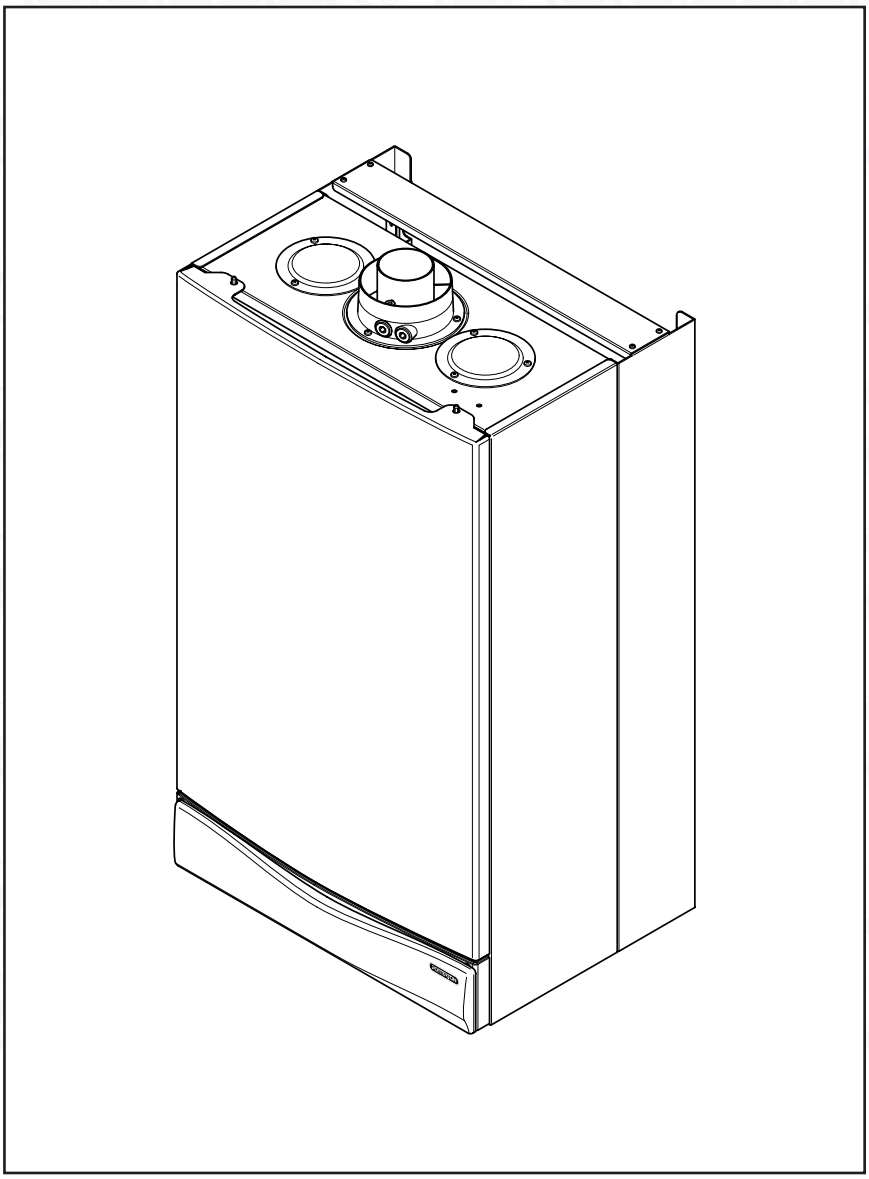

Please leave these instructions with the user

spares & parts online IBASIS.CO.UK

## Natural Gas

**Potterton Performa System 12e**
G.C.N° 41 590 88
**Potterton Performa System 18e**
G.C.N° 41 590 89
**Potterton Performa System 24e**
G.C.N° 41 590 90
**Potterton Performa System 28e**
G.C.N° 41 590 91

CE IPX5D

The boiler meets the requirements of Statutory Instrument " The Boiler (Efficiency) Regulations 1993 N° 3083" and is deemed to meet the requirements of Directive 92/42/EEC on the energy efficiency requirements for new hot water boilers fired with liquid or gaseous fuels:-

Type test for purpose of Regulation 5 certified by:
Notified Body 0051.

Product/Production certified by:
Notified Body 0051.

For GB/IE only.

spares & parts online IBASIS.CO.UK

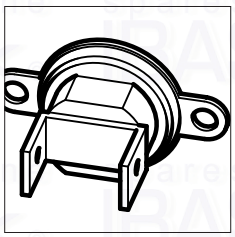

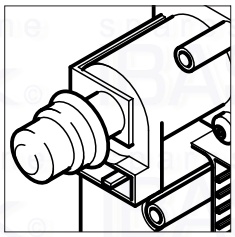

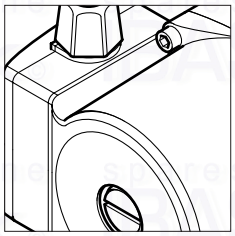

# Contents


| Section | | Page |
|---|---|---|
| 1.0 | Introduction | 4 |
| 2.0 | General Layout | 5 |
| 3.0 | Appliance Operation | 6 |
| 4.0 | Technical Data | 7 |
| 5.0 | Dimensions and Fixings | 11 |
| 6.0 | System Details | 12 |
| 7.0 | Site Requirements | 14 |
| 8.0 | Installation | 19 |
| 9.0 | Commissioning the Boiler | 24 |
| 10.0 | Completion | 26 |
| 11.0 | Servicing the Boiler | 27 |
| 12.0 | Changing Components | 29 |
| 13.0 | Illustrated Wiring Diagram | 37 |
| 14.0 | Fault Finding | 38 |
| 15.0 | Short Parts List | 41 |
| 16.0 | Notes | 42 |

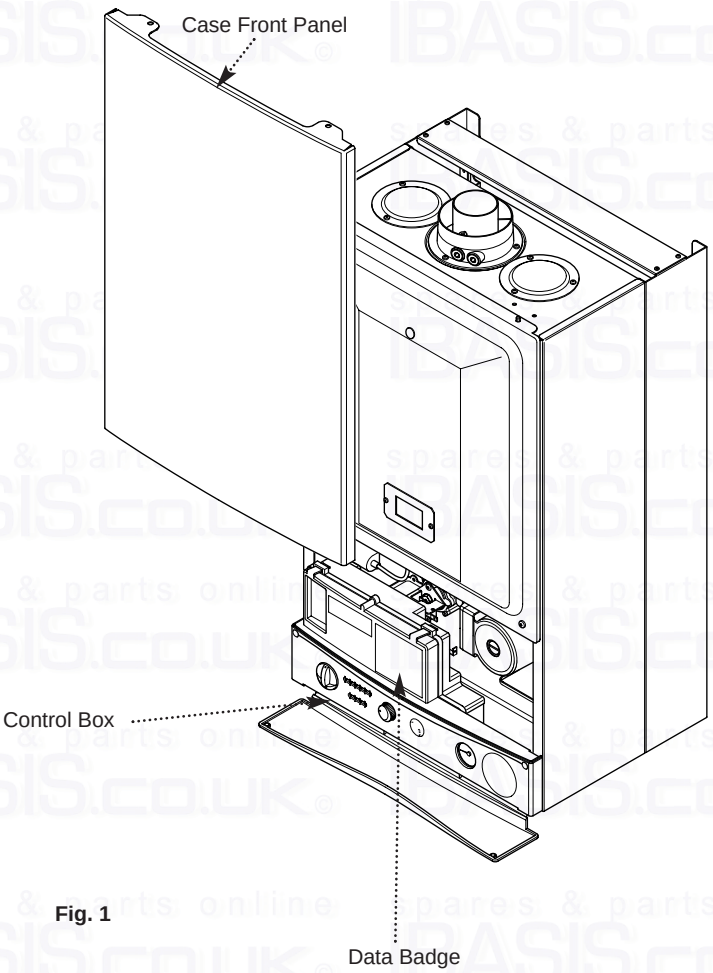


**Fig. 1**

**NOTE:** This appliance must be installed in accordance with the manufacturer's instructions and the regulations in force.Read the instructions fully before installing or using the appliance.

**"Benchmark" Log Book**

As part of the industry-wide "Benchmark" initiative all Potterton boilers now include an Installation, Commissioning and Service Record Log Book. Please read the Log Book carefully and complete all sections relevant to the appliance and installation. These include sections on the type of controls employed, flushing the system, burner operating pressure etc. The details of the Log Book will be required in the event of any warranty work. Also, there is a section to be completed at each subsequent regular service visit. The Log Book must be left with the user.

# 1.0 Introduction

**Potterton declare that no substances harmful to health are contained in the appliance or used during appliance manufacture.**

## 1.1 Description

1. The Potterton Performa System are fully automatic gas fired wall mounted system boilers. They are room sealed and fan assisted.

2. The boilers are set to give a maximum output of 12kW, 18kW, 24kW or 28kW.

3. They are designed for use on Natural Gas (G20) and can be converted to use Propane (12e, 18e, 24e & 28e) or Butane (12e, 18e & 24e).

4. The boiler incorporates a circulating pump and expansion vessel. It is suitable for use only on fully pumped sealed systems.

5. The boiler data badge gives details of the model, serial number and Gas Council number and is situated on the control box. It is visible when the case front panel is removed (Fig. 1).

6. The boiler is intended to be installed in residential / commercial / light industrial E.M.C. environments on a governed meter supply only.

7. The boiler must be installed with one of the purpose designed flues such as the standard horizontal flue kit, part no. 247719.

8. **All systems must be thoroughly flushed and treated with inhibitor (see section 6.1).**

## 1.2 Installation

1. The appliance is suitable for installation only in G.B. and I.E. and should be installed in accordance with the rules in force. For Ireland install in accordance with I.S.813 **"Installation of Gas Appliances"**. The installation must be carried out by a CORGI Registered Installer or other competent person and be in accordance with the relevant requirements of **Gas Safety** (Installation and Use) **Regulations**, the **Building Regulations** (Scotland) (Consolidation), the **Local Building Regulations**, the **Current I.E.E. Wiring Regulations** and the bye laws of the Local Water Undertaking. Where no specific instructions are given, reference should be made to the relevant **BRITISH STANDARD CODES OF PRACTICE.**

## 1.3 Optional Extras

Various flue extensions, bends, vertical flue kits,control accessories etc. are available as optional extras. These are detailed in a separate publication.

# 2.0 General Layout

## 2.1 Layout

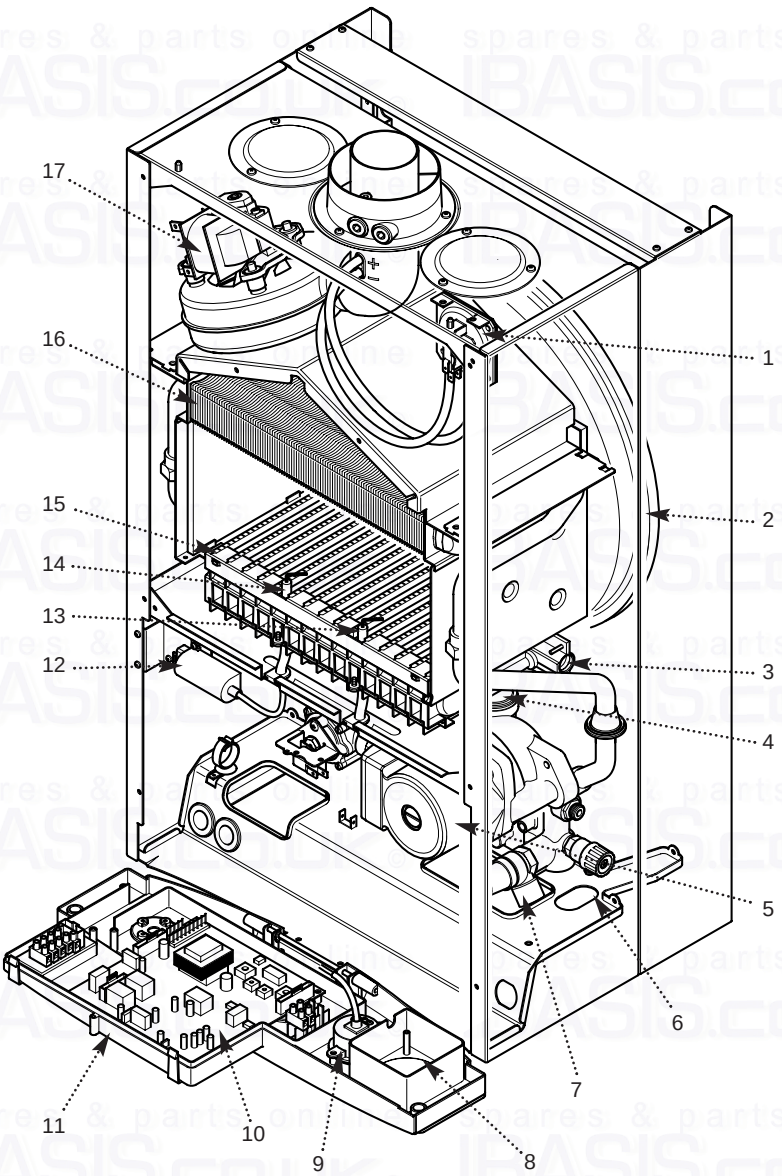


1. Air Pressure Switch
2. Expansion Vessel
3. Burner Manifold
4. Automatic Air Vent
5. Circulation Pump
6. Drain Off Point
7. Pressure Relief Valve
8. Optional Integral Timer Position
9. System Pressure Gauge
10. PCB
11. Control Box
12. Spark Generator
13. Flame Sensing Electrode
14. Spark Electrode
15. Burner
16. Primary Heat Exchanger
17. Fan Assembly
18. On/Off/Reset Selector Switch
19. Central Heating Temperature Control
20. Flame Failure
21. Safety Thermostat
22. Fault on Fan or Flue
23. Fault on Pump or Low System Pressure
24. Temperature Indication Only
25. Fault on Central Heating Sensor
26. Power On
27. Hot Water Mode
28. Central Heating Mode
29. Burner On

When neons 20 to 25 are constantly illuminated, they indicate the temperature of the central heating water.

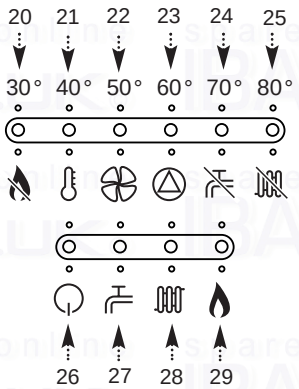


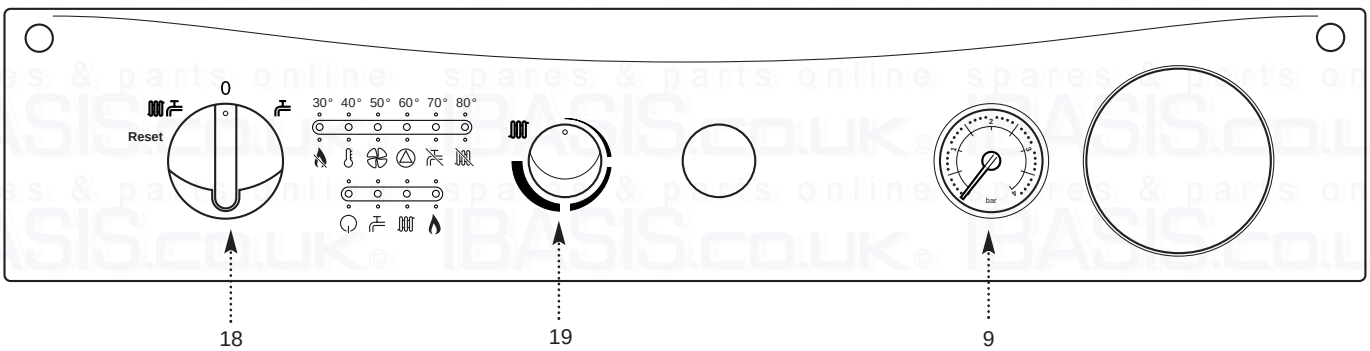

**Boiler Primary Circuit**

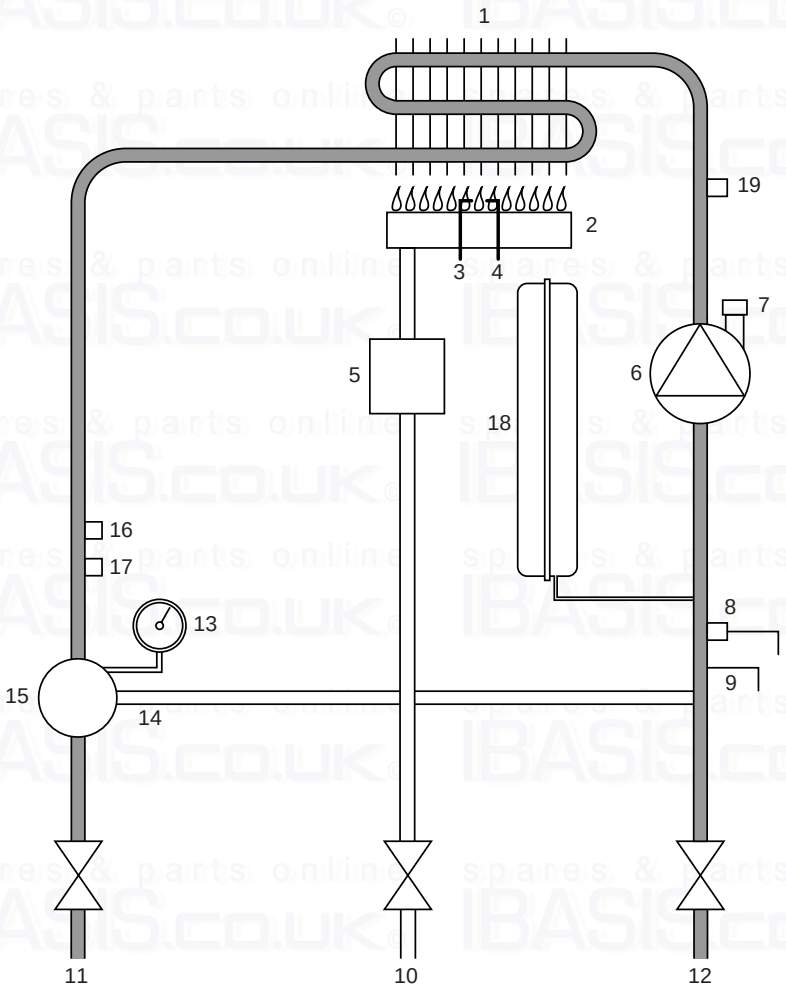


Fig. 2

## Key

1 Heat Exchanger
2 Burner
3 Ignition Electrode
4 Flame Sensing Electrode
5 Gas Valve
6 Pump
7 Automatic Air Vent
8 Pressure Relief Valve
9 Boiler Drain Point
10 Gas Inlet
11 Boiler Flow
12 Boiler Return
13 Pressure Gauge
14 Automatic By-Pass
15 Hydraulic Differential Pressure Sensor
16 Safety Thermostat
17 Central Heating Temperature Sensor
18 Expansion Vessel
19 Water Heating Sensor

# 3.0 Appliance Operation

## 3.1 Operating Mode (Fig. 2)

1. With a demand for heating, the pump circulates water through the primary circuit. At a pre-determined flow rate the hydraulic differential pressure switch operates, initiating the ignition sequence.

2. The main burner ignites at low rate, then the gas valve controls the gas rate to maintain the heating temperature measured by the temperature sensor.

3. When the flow temperature exceeds the setting temperature, a 3 minute delay occurs before the burner relights automatically (anti-cycling). The pump continues to run during this period.

4. When the demand is satisfied the burner is extinguished and the pump continues to run for a period of 3 minutes (Pump Overrun).

**IMPORTANT:** When the selector switch is in the '0' (Off) position the electrical supply to the boiler is isolated. The boiler will not operate.

## 3.3 Frost Protection Mode

1. The frost protection mode is integral to the appliance and functions only with the selector switch (see Section 2.1) in the domestic hot water and central heating position. If the system temperature falls below 5° C then the boiler will fire on its minimum setting until a flow temperature of 30° C is reached. Further protection can be incorporated by using a system frost thermostat.

## 3.4 Pump Protection

1. With the selector switch (see Section 2.1) in either the central heating or central heating and hot water position the pump will automatically operate for 1 minute in every 24 hours to prevent sticking.

spares & parts online IBASIS.CO.UK

## 4.1 System 12e

| Appliance Type | $C_{12}$ | $C_{32}$ |
|---|---|---|
| **Appliance Category** | CAT II $_{2H\ 3+}$ | |

**Heat Input** (Gross)

| | Max | Min |
|---|---|---|
| kW | 13.8 | 7 |
| Btu/h | 47,094 | 23,888 |

| **Heat Output** | Max | Min |
|---|---|---|
| kW | 12.4 | 6.3 |
| Btu/h | 42,309 | 21,496 |

**Max Gas Rate** (Natural Gas - G20) (After 10 Mins)

| | |
|---|---|
| $m^3/h$ | 1.46 |
| $ft^3/h$ | 51.57 |

**Burner Pressure** (Natural Gas - G20)

| | Max Rate | Min Rate |
|---|---|---|
| mbar | 6.9 ± 0.5 | 2.5 ± 0.5 |
| in wg | 2.8 ± 0.2 | 1.0 ± 0.2 |

**Inlet Pressure** (Natural Gas - G20)

| | |
|---|---|
| mbar | 20 |
| in wg | 8 |

**Burner Injector** (Natural Gas - G20)
12 x 1.28mm Diameter

**Electrical Supply** 230V~ 50$H_Z$
(Appliance must be connected to an earthed supply)

**Power Consumption** 120W

**External Fuse Rating** 3A Maximum

**Internal Fuse Rating**
Fuse 2A Fast Blow to BS 4265

**Electrical Protection**
IPX5D

**$NO_X$ Class** 3

| **Flue Terminal Dimensions** | | |
|---|---|---|
| | Diameter | 100mm |
| | Projection | 95mm |

| **Connections** | | copper tails |
|---|---|---|
| Gas Supply | - | 22mm |
| Central Heating Flow | - | 22mm |
| Central Heating Return | - | 22mm |
| Pressure Relief Discharge | - | 15mm |

| **Outercase Dimensions** | | |
|---|---|---|
| Casing Height | - | 780mm |
| Overall Height Inc Flue Elbow | - | 980mm |
| Casing Width | - | 450mm |
| Casing Depth | - | 345mm |

**Clearances**

| | |
|---|---|
| Both Sides | 5 mm Min |
| Above Casing | 200 mm Min |
| Below Casing | 200 mm Min |
| Front | 450 mm Min (For Servicing) |
| Front | 5 mm Min (In Operation) |

| **Weights** | kg |
|---|---|
| Packaged Boiler Carton | 45 |
| Packaged Flue Kit | 3 |
| Installation Lift Weight | 37 |

**Central Heating Primary Circuit Pressures**

| | bar |
|---|---|
| Safety Discharge | 3 |
| Max Operating | 2.5 |
| Min Operating | 0.2 |
| Recommend Operating | 1-2 |

**Pump -** Grundfos UP 15-50
Available Head See graph below

**Expansion Vessel -** (For Central Heating only. Integral with appliance)

| | bar |
|---|---|
| Min Pre-charge Pressure | 0.5 |

| | litre |
|---|---|
| Max Capacity of CH System | 125 |
| Primary Water Content of Boiler (unpressurised) | 1.1 |

**Temperatures**
C.H. Flow Temp (adjustable)
35°C to 85°C max (± 5°C)

| **LPG Gases** | **Propane - G31 and Butane - G30** | | |
|---|---|---|---|
| **Burner Injector** 12 x 0.65mm diameter | | | |
| **Burner Pressure** | | Max Rate | Min Rate |
| Propane | mbar | 36.2 ± 0.5 | 10.8 ± 0.5 |
| | in wg | 14.5 ± 0.2 | 4.3 ± 0.2 |
| Butane | mbar | 28.8 ± 0.5 | 7.7 ± 0.5 |
| | in wg | 11.5 ± 0.2 | 3.1 ± 0.2 |

| **Inlet Pressures** | Propane | Butane |
|---|---|---|
| mbar | 37 | 28/30 |
| in wg | 14.8 | 11.2 |

**SEDBUK Declaration For System Boiler 12e**

**The seasonal efficiency (SEDBUK) is 78.8%**

This value is used in the UK Government's Standard Assessment Procedure (SAP) for energy rating of dwellings. The test data from which it has been calculated have been certified by 0051.

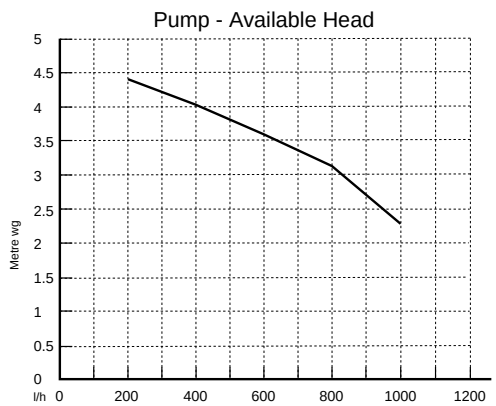

## 4.2 System 18e

| Appliance Type | $C_{12}$ | $C_{32}$ |
|---|---|---|
| Appliance Category | CAT II 2H 3+ | |

**Heat Input** (Gross)

| | Max | Min |
|---|---|---|
| kW | 19.4 | 10.6 |
| Btu/h | 66,200 | 36,170 |

| Heat Output | Max | Min |
|---|---|---|
| kW | 17.5 | 9.3 |
| Btu/h | 59,720 | 31,740 |

**Max Gas Rate** (Natural Gas - G20) (After 10 Mins)

| | |
|---|---|
| $m^3/h$ | 2.05 |
| $ft^3/h$ | 72.4 |

**Burner Pressure** (Natural Gas - G20)

| | Max Rate | Min Rate |
|---|---|---|
| mbar | 6.9 ± 0.5 | 2.5 ± 0.5 |
| in wg | 2.8 ± 0.2 | 1.0 ± 0.2 |

**Inlet Pressure** (Natural Gas - G20)

| | |
|---|---|
| mbar | 20 |
| in wg | 8 |

**Burner Injector** (Natural Gas - G20)
12 x 1.28mm Diameter

**Electrical Supply** 230V~ 50Hz
(Appliance must be connected to an earthed supply)

**Power Consumption** 170W

**External Fuse Rating** 3A Maximum

**Internal Fuse Rating**
Fuse 2A Fast Blow to BS 4265

**Electrical Protection**
IPX5D

**$NO_X$ Class** 3

| Flue Terminal Dimensions | | |
|---|---|---|
| Diameter | 100mm |
| Projection | 95mm |

| Connections | | copper tails |
|---|---|---|
| Gas Supply | - | 22mm |
| Central Heating Flow | - | 22mm |
| Central Heating Return | - | 22mm |
| Pressure Relief Discharge | - | 15mm |

**Outercase Dimensions**

| | | |
|---|---|---|
| Casing Height | - | 780mm |
| Overall Height Inc Flue Elbow | - | 980mm |
| Casing Width | - | 450mm |
| Casing Depth | - | 345mm |

**Clearances**

| | | |
|---|---|---|
| Both Sides | 5 mm Min | |
| Above Casing | 200 mm Min | |
| Below Casing | 200 mm Min | |
| Front | 450 mm Min | (For Servicing) |
| Front | 5 mm Min | (In Operation) |

| Weights | kg |
|---|---|
| Packaged Boiler Carton | 45 |
| Packaged Flue Kit | 3 |
| Installation Lift Weight | 37 |

**Central Heating Primary Circuit Pressures**

| | bar |
|---|---|
| Safety Discharge | 3 |
| Max Operating | 2.5 |
| Min Operating | 0.2 |
| Recommend Operating | 1-2 |

**Pump -** Grundfos UP 15-50
Available Head See graph below

**Expansion Vessel -** (For Central Heating only. Integral with appliance)

| | bar |
|---|---|
| Min Pre-charge Pressure | 0.5 |

| | litre |
|---|---|
| Max Capacity of CH System | 125 |
| Primary Water Content of Boiler (unpressurised) | 1.1 |

**Temperatures**
C.H. Flow Temp (adjustable)
35°C to 85°C max (± 5°C)

| LPG Gases | Propane - G31 and Butane - G30 | | |
|---|---|---|---|
| **Burner Injector** 12 x 0.65mm diameter | | | |
| **Burner Pressure** | | Max Rate | Min Rate |
| Propane | mbar | 36.2 ± 0.5 | 10.8 ± 0.5 |
| | in wg | 14.5 ± 0.2 | 4.3 ± 0.2 |
| Butane | mbar | 28.8 ± 0.5 | 7.7 ± 0.5 |
| | in wg | 11.5 ± 0.2 | 3.1 ± 0.2 |

| Inlet Pressures | Propane | Butane |
|---|---|---|
| mbar | 37 | 28/30 |
| in wg | 14.8 | 11.2 |

**SEDBUK Declaration For System Boiler 18e**

**The seasonal efficiency (SEDBUK) is 78.7%**

This value is used in the UK Government's Standard Assessment Procedure (SAP) for energy rating of dwellings. The test data from which it has been calculated have been certified by 0051.

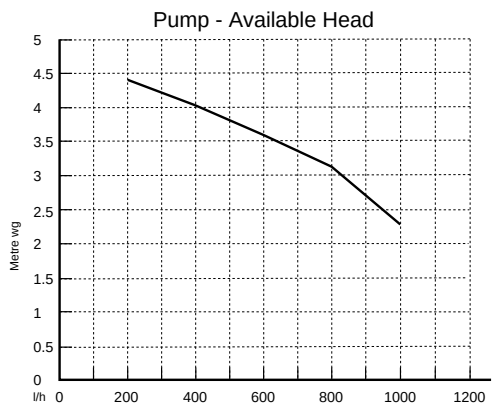

## 4.3 System 24e

| Appliance Type | $C_{12}$ | $C_{32}$ |
|---|---|---|
| **Appliance Category** | CATⅡ $_{2H\ 3+}$ | |

**Heat Input** (Gross)

| | Max | Min |
|---|---|---|
| kW | 26.3 | 10.6 |
| Btu/h | 89,739 | 36,170 |

| **Heat Output** | Max | Min |
|---|---|---|
| kW | 24.0 | 9.3 |
| Btu/h | 81,891 | 31,740 |

**Max Gas Rate** (Natural Gas - G20) (After 10 Mins)

| | |
|---|---|
| $m^3/h$ | 2.78 |
| $ft^3/h$ | 98.12 |

**Burner Pressure** (Natural Gas - G20)

| | Max Rate | Min Rate |
|---|---|---|
| mbar | 12.2 ± 0.5 | 2.5 ± 0.5 |
| in wg | 4.88 ± 0.2 | 1.0 ± 0.2 |

**Inlet Pressure** (Natural Gas - G20)

| | |
|---|---|
| mbar | 20 |
| in wg | 8 |

**Burner Injector** (Natural Gas - G20)
12 x 1.28mm Diameter

**Electrical Supply** 230V~ 50$H_z$
(Appliance must be connected to an earthed supply)

**Power Consumption** 170W

**External Fuse Rating** 3A Maximum

**Internal Fuse Rating**
Fuse 2A Fast Blow to BS 4265

**Electrical Protection**
IPX5D

**$NO_X$ Class** 3

| **Flue Terminal Dimensions** | | |
|---|---|---|
| | Diameter | 100mm |
| | Projection | 95mm |

| **Connections** | | copper tails |
|---|---|---|
| Gas Supply | - | 22mm |
| Central Heating Flow | - | 22mm |
| Central Heating Return | - | 22mm |
| Pressure Relief Discharge | - | 15mm |

| **Outercase Dimensions** | | |
|---|---|---|
| Casing Height | - | 780mm |
| Overall Height Inc Flue Elbow | - | 980mm |
| Casing Width | - | 450mm |
| Casing Depth | - | 345mm |

| **Clearances** | | |
|---|---|---|
| Both Sides | 5 mm Min | |
| Above Casing | 200 mm Min | |
| Below Casing | 200 mm Min | |
| Front | 450 mm Min | (For Servicing) |
| Front | 5 mm Min | (In Operation) |

| **Weights** | kg |
|---|---|
| Packaged Boiler Carton | 45 |
| Packaged Flue Kit | 3 |
| Installation Lift Weight | 37 |

**Central Heating Primary Circuit Pressures**

| | bar |
|---|---|
| Safety Discharge | 3 |
| Max Operating | 2.5 |
| Min Operating | 0.2 |
| Recommend Operating | 1-2 |

**Pump -** Grundfos UP 15-50
Available Head See graph below

**Expansion Vessel -** (For Central Heating only. Integral with appliance)

| | bar |
|---|---|
| Min Pre-charge Pressure | 0.5 |

| | litre |
|---|---|
| Max Capacity of CH System | 125 |
| Primary Water Content of Boiler (unpressurised) | 1.1 |

**Temperatures**
C.H. Flow Temp (adjustable)
35°C to 85°C max (± 5°C)

| **LPG Gases Propane - G31 and Butane - G30** | | | |
|---|---|---|---|
| **Burner Injector** 12 x 0.65mm diameter | | | |
| **Burner Pressure** | | Max Rate | Min Rate |
| Propane | mbar | 36.2 ± 0.5 | 6.4 ± 0.5 |
| | in wg | 14.5 ± 0.2 | 2.6 ± 0.2 |
| Butane | mbar | 28.3 ± 0.5 | 5.3 ± 0.5 |
| | in wg | 11.3 ± 0.2 | 2.1 ± 0.2 |

| **Inlet Pressures** | Propane | Butane |
|---|---|---|
| mbar | 37 | 28/30 |
| in wg | 14.8 | 11.2 |

**SEDBUK Declaration For System Boiler 24e**

**The seasonal efficiency (SEDBUK) is 78.5%**

This value is used in the UK Government's Standard Assessment Procedure (SAP) for energy rating of dwellings. The test data from which it has been calculated have been certified by 0051.

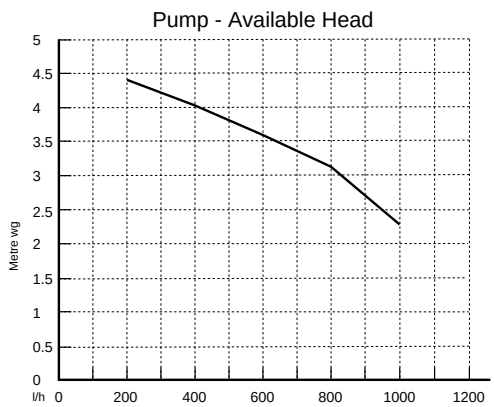

## 4.4 System 28e

| | | |
|---|---|---|
| **Appliance Type** | $C_{12}$ | $C_{32}$ |
| **Appliance Category** | CAT II 2H 3P | |

**Heat Input** (Gross)

| | Max | Min |
|---|---|---|
| kW | 32.6 | 11.9 |
| Btu/h | 111,250 | 40,610 |

**Heat Output**

| | Max | Min |
|---|---|---|
| kW | 29.4 | 10.4 |
| Btu/h | 100,330 | 35,490 |

**Max Gas Rate** (Natural Gas - G20) (After 10 Mins)

| | |
|---|---|
| $m^3/h$ | 3.45 |
| $ft^3/h$ | 122 |

**Burner Pressure** (Natural Gas - G20)

| | Max Rate | Min Rate |
|---|---|---|
| mbar | 12.5 ± 0.5 | 1.8 ± 0.5 |
| in wg | 5.0 ± 0.2 | 0.7 ± 0.2 |

**Inlet Pressure** (Natural Gas - G20)

| | |
|---|---|
| mbar | 20 |
| in wg | 8 |

**Burner Injector** (Natural Gas - G20)
15 x 1.28mm Diameter

**Electrical Supply** 230V~ 50Hz
(Appliance must be connected to an earthed supply)

**Power Consumption** 190W

**External Fuse Rating** 3A Maximum

**Internal Fuse Rating**
Fuse 2A Fast Blow to BS 4265

**Electrical Protection**
IPX5D

**$NO_X$ Class** 3

**Flue Terminal Dimensions**

| | |
|---|---|
| Diameter | 100mm |
| Projection | 95mm |

**Connections** copper tails

| | | |
|---|---|---|
| Gas Supply | - | 22mm |
| Central Heating Flow | - | 22mm |
| Central Heating Return | - | 22mm |
| Pressure Relief Discharge | - | 15mm |

**Outercase Dimensions**

| | | |
|---|---|---|
| Casing Height | - | 780mm |
| Overall Height Inc Flue Elbow | - | 980mm |
| Casing Width | - | 450mm |
| Casing Depth | - | 345mm |

**Clearances**

| | | |
|---|---|---|
| Both Sides | 5 mm Min | |
| Above Casing | 200 mm Min | |
| Below Casing | 200 mm Min | |
| Front | 450 mm Min | (For Servicing) |
| Front | 5 mm Min | (In Operation) |

| **Weights** | kg |
|---|---|
| Packaged Boiler Carton | 47 |
| Packaged Flue Kit | 3 |
| Installation Lift Weight | 39 |

**Central Heating Primary Circuit Pressures**

| | bar |
|---|---|
| Safety Discharge | 3 |
| Max Operating | 2.5 |
| Min Operating | 0.2 |
| Recommend Operating | 1-2 |

**Pump -** Grundfos UP 15-60
Available Head See graph below

**Expansion Vessel -** (For Central Heating only. Integral with appliance)

| | bar |
|---|---|
| Min Pre-charge Pressure | 0.5 |

| | litre |
|---|---|
| Max Capacity of CH System | 125 |
| Primary Water Content of Boiler (unpressurised) | 1.1 |

**Temperatures**
C.H. Flow Temp (adjustable)
35°C to 85°C max (± 5°C)

| **LPG Gases Propane - G31** | | | |
|---|---|---|---|
| **Burner Injector** 15 x 0.77mm diameter | | | |
| **Burner Pressure** | | Max Rate | Min Rate |
| Propane | mbar | 34.4 ± 0.5 | 5.1 ± 0.5 |
| | in wg | 13.8 ± 0.2 | 2.0 ± 0.2 |
| **Inlet Pressures** | | | |
| | mbar | 37 | |
| | in wg | 14.8 | |

**SEDBUK Declaration For System Boiler 28e**

**The seasonal efficiency (SEDBUK) is 78.2 %**

This value is used in the UK Government's Standard Assessment Procedure (SAP) for energy rating of dwellings. The test data from which it has been calculated have been certified by 0051.

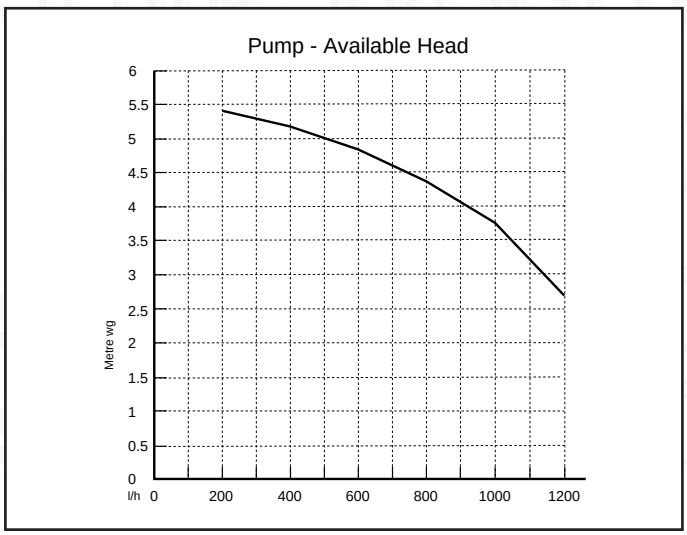

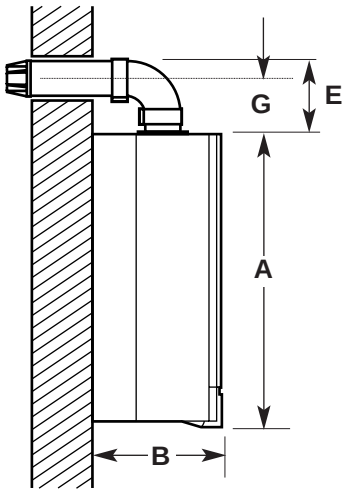


| Dimensions | |
|---|---|
| **A** | 780mm |
| **B** | 345mm |
| **C** | 450mm |
| **D** | 107mm Ø Min. |
| **E** | 200mm |
| **F** | 190mm |
| **G** | 143mm |

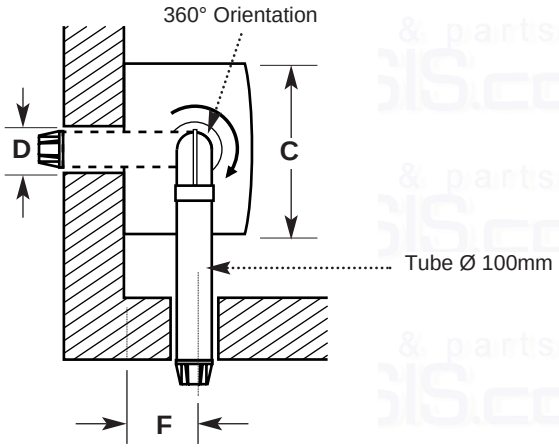


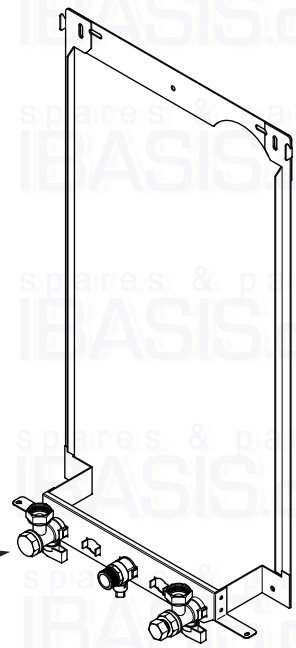

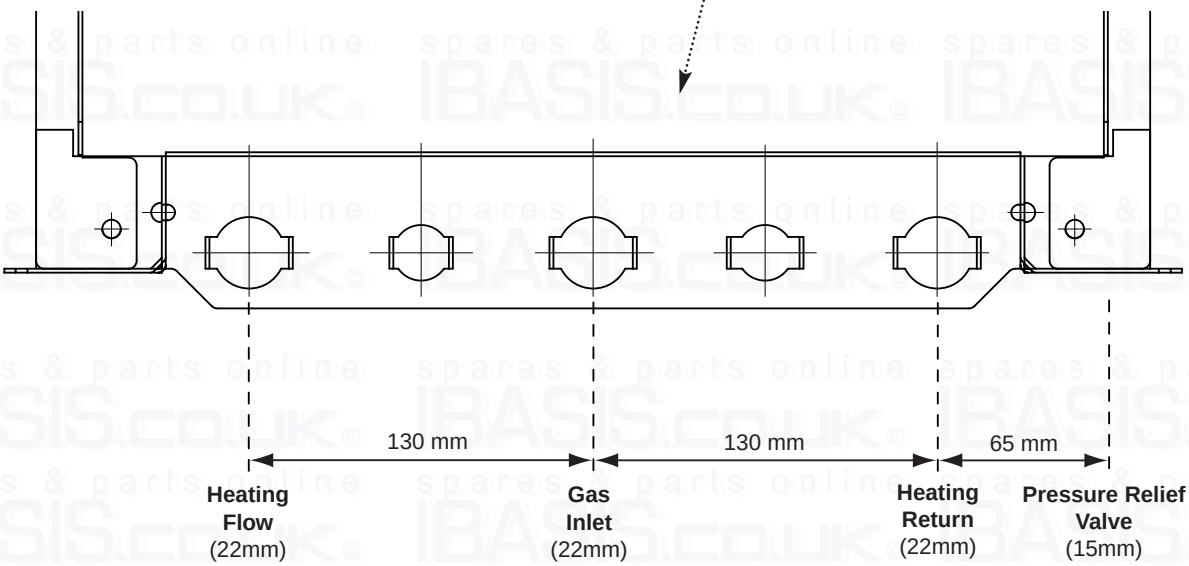

# 6.0 System Details

## 6.1 Central Heating Circuit

1. The appliance is suitable for fully pumped SEALED SYSTEMS ONLY.

**Treatment of Water Circulating Systems**

- All recirculatory water systems will be subject to corrosion unless an appropriate water treatment is applied. This means that the efficiency of the system will deteriorate as corrosion sludge accumulates within the system, risking damage to pump and valves, boiler noise and circulation problems.
- For optimum performance after installation this boiler and its associated central heating system must be flushed in accordance with the guidelines given in BS 7593 “Treatment of water in domestic hot water central heating systems”.
- This must involve the use of a proprietary cleanser, such as BetzDearborn Sentinel X300 or X400, or Fernox Superfloc. Full instructions are supplied with the products, but for immediate information please contact BetzDearborn (0151 420 9563) or Fernox (01799 550 811) directly.
- For long term protection against corrosion and scale, after flushing it is recommended that an inhibitor such as BetzDearborn Sentinel X100, or Fernox MB-1 or Copal is dosed in accordance with the guidelines given in BS 7593.

**Failure to flush and add inhibitor to the system may invalidate the appliance warranty.**

- It is important to check the inhibitor concentration after installation, system modification and at every service in accordance with the manufacturer’s instructions. (Test kits are available from inhibitor stockists.)
- For information or advice regarding any of the above contact the Potterton Helpline.

## 6.2 Bypass

1. The boiler is fitted with an automatic integral bypass.

## 6.3 System Control

1. The boiler is designed for use in a heating system that incorporates external controls, i.e. a minimum of a timer device.

2. For optimum operating conditions and maximum economy the fitting of a programmable room thermostat is recommended.

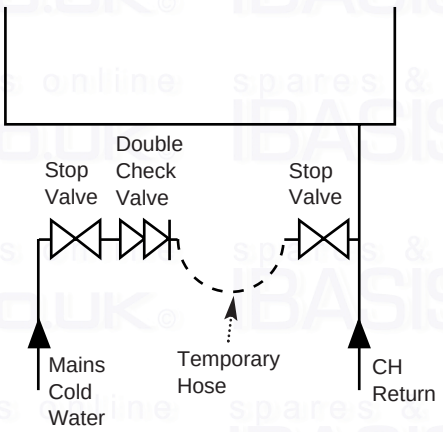


Fig. 3

## 6.4 System Filling and Pressurising

1. A filling point connection on the central heating return pipework must be provided to facilitate initial filling and pressurising and also any subsequent water loss replacement/refilling.

2. The filling method adopted must be in accordance with the Water Supply (Water Fittings) regulations and the Water Bylaws (Scotland).

3. Your attention is drawn to: Paragraph 24 of Schedule 2 Section 8 of the publication Water Regulations Guide which gives recommendations and guidance on approved methods for filling sealed systems.

4. The sealed primary circuits may be filled or replenished by means of a temporary connection between the primary circuit and a supply pipe provided the arrangement in accordance with Diagram R24.2a of the Water Regulations Guide.

5. The temporary hose must be completely removed at both ends after use.

## 6.5 Expansion Vessel

1. The appliance expansion vessel is pre-charged to 0.5 bar. The vessel is suitable for correct operation for system capacities up to 125 litres. For greater system capacities an additional expansion vessel must be fitted - refer to BS 7074 Pt 1.

## 6.6 Pressure Relief Valve (Fig. 4)

1. The pressure relief valve is set at 3 bar, therefore all pipework, fittings, etc. should be suitable for pressures in excess of 3 bar.

2. The pressure relief discharge pipe should be not less than 15mm dia, run continuously downward, and discharge outside the building, preferably over a drain. It should be routed in such a manner that no hazard occurs to occupants or causes damage to wiring or electrical components. The end of the pipe should terminate facing down and towards the wall.

3. The discharge must not be above a window, entrance or other public access. Consideration must be given to the possibility that boiling water/steam could discharge from the pipe.

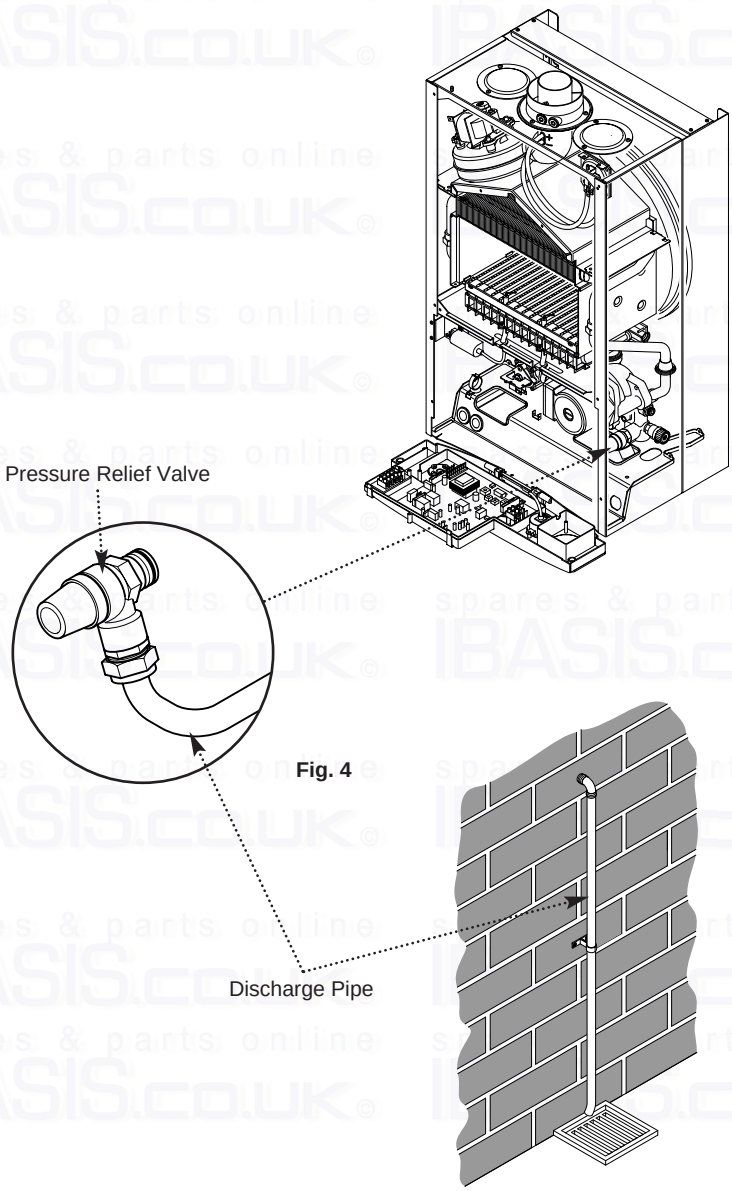


Fig. 4

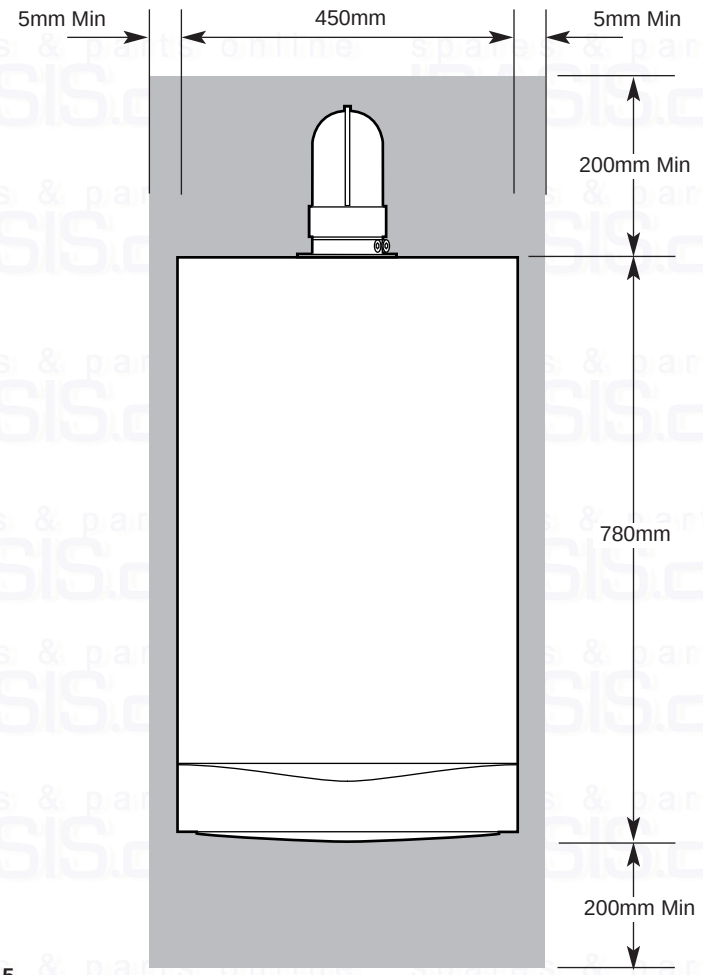


**Fig. 5**

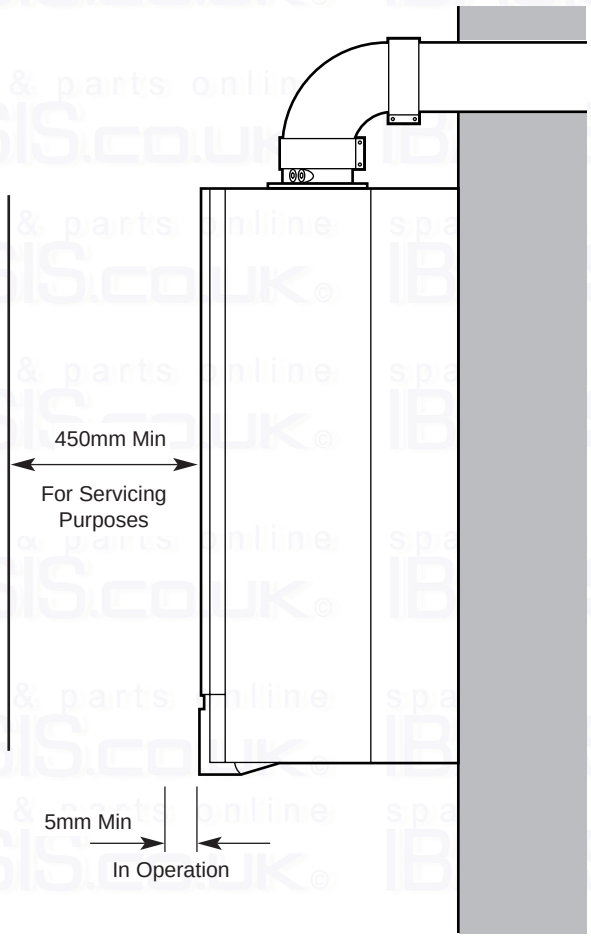


**Fig. 6**

# 7.0 Site Requirements

## 7.1 Information

1. The installation must be carried out by a CORGI Registered Installer or other registered competent person and be in accordance with the relevant requirements of the current **Gas Safety** (Installation and Use) **Regulations**, the **Building Regulations** (Scotland)(Consolidation), the **Local Building Regulations**, the current **I.E.E. Wiring Regulations** and the bye laws of the **Local Water Undertaking**. Where no specific instruction is given reference should be made to the relevant **BRITISH STANDARD CODES OF PRACTICE**. For Ireland install in accordance with IS 813 "**Installation of Gas Appliances**".

## 7.2 B.S. Codes of Practice

| Standard | Scope |
|---|---|
| BS 6891 | Gas Installation. |
| BS 5546 | Installation of hot water supplies for domestic purposes. |
| BS 5449 Part 1 | Forced circulation hot water systems. |
| BS 6798 | Installation of gas fired hot water boilers. |
| BS 5440 Part 1 | Flues. |
| BS 5440 Part 2 | Ventilation. |
| BS 7074 | Expansion vessels and ancillary equipment for sealed water systems. |
| BS 7593 | Treatment of water in domestic hot water central heating systems. |

**WARNING** - The addition of anything that may interfere with the normal operation of the appliance without the express written permission of could invalidate the appliance warranty and infringe the **Gas Safety** (Installation and Use) **Regulations**.

## 7.3 Clearances (Figs. 5 & 6)

1. A flat vertical area is required for the installation of the boiler.

2. These dimensions include the necessary clearances around the boiler for case removal, spanner access and air movement. Additional clearances may be required for the passage of pipes around local obstructions such as joists running parallel to the front face of the boiler.

## 7.4 Location

1. The boiler may be fitted to any suitable wall with the flue passing through an outside wall or roof and discharging to atmosphere in a position permitting satisfactory removal of combustion products and providing an adequate air supply. The boiler should be fitted within the building unless otherwise protected by a suitable enclosure i.e. garage or outhouse. (The boiler may be fitted inside a cupboard-see Section 7.5).

2. If the boiler is sited in an unheated enclosure then it is recommended to leave the On/Off/Reset Selector Switch in the domestic hot water and central heating position to give frost protection.

3. If the boiler is fitted in a room containing a bath or shower reference must be made to the current **I.E.E. Wiring Regulations** and **Building Regulations**. If the boiler is to be fitted into a building of timber frame construction then reference must be made to the current edition of Institute of Gas Engineers Publication IGE/UP/7 (Gas Installations in Timber Framed Housing).

## 7.5 Ventilation of Compartments

1. Where the appliance is installed in a cupboard or compartment, no air vents are required.

2. BS 5440: Part 2 refers to room sealed appliances installed in compartments. The appliance will run sufficiently cool without ventilation.

## 7.6 Gas Supply

1. The gas installation should be in accordance with BS 6891.

2. The connection to the appliance is a 22mm copper tail located at the rear of the gas service cock (Fig. 7).

3. Ensure that the pipework from the meter to the appliance is of adequate size. Do not use pipes of a smaller diameter than the boiler gas connection (22mm).

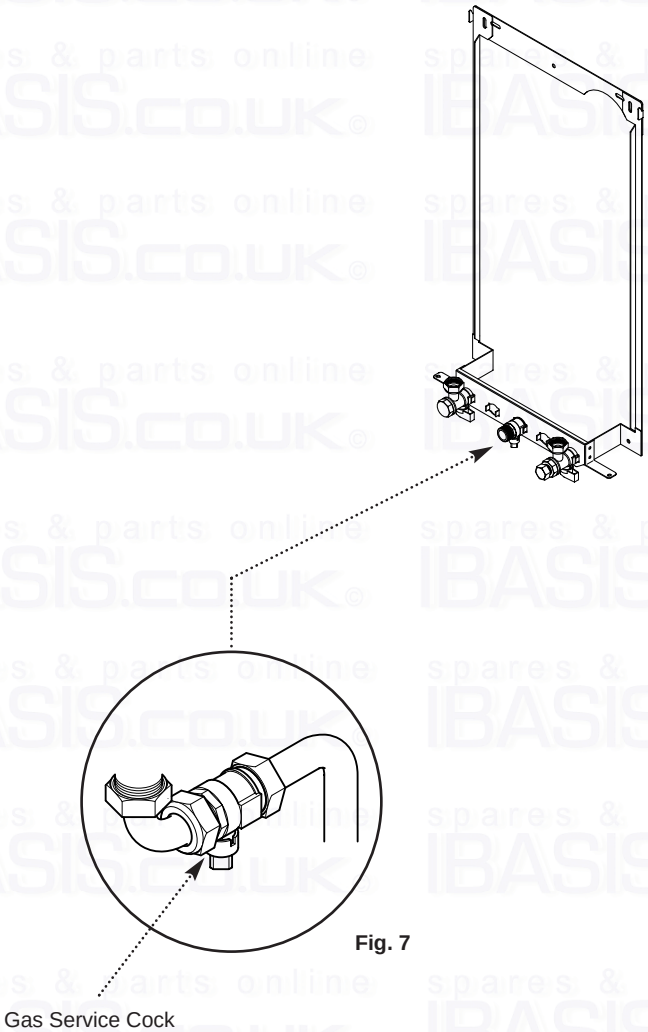


**Fig. 7**

## 7.7 Electrical Supply

1. External wiring must be correctly earthed, polarised and in accordance with current I.E.E. Wiring Regulations.

2. The mains supply must be 230V ~ 50$H_Z$ and fused at 3A maximum.

> **NOTE:** The method of connection to the electricity supply must facilitate complete electrical isolation of the appliance.
>
> Connection may be via a fused double-pole isolator with a contact separation of at least 3mm in all poles and servicing the boiler and system controls only.

3. When the system includes an indirect domestic hot water cylinder it is recommended that a cylinder thermostat is used in conjunction with a 3 port 2 position valve or 2 port zone valve.

## 7.8 Flue

1. **The flue terminal position must be in accordance with the current editions of B.S. 5440 Part 1, and either Part J of the Building Regulations England and Wales or Part F of the Building Standards (Scotland) Regulations as appropriate.**

2. If the terminal discharges onto a pathway or passageway, check that combustion products will not cause a nuisance and that the terminal will not obstruct the passageway.

3. If a terminal is less than 2 metres above a balcony, above ground or above a flat roof to which people have access, then a suitable terminal guard must be provided.

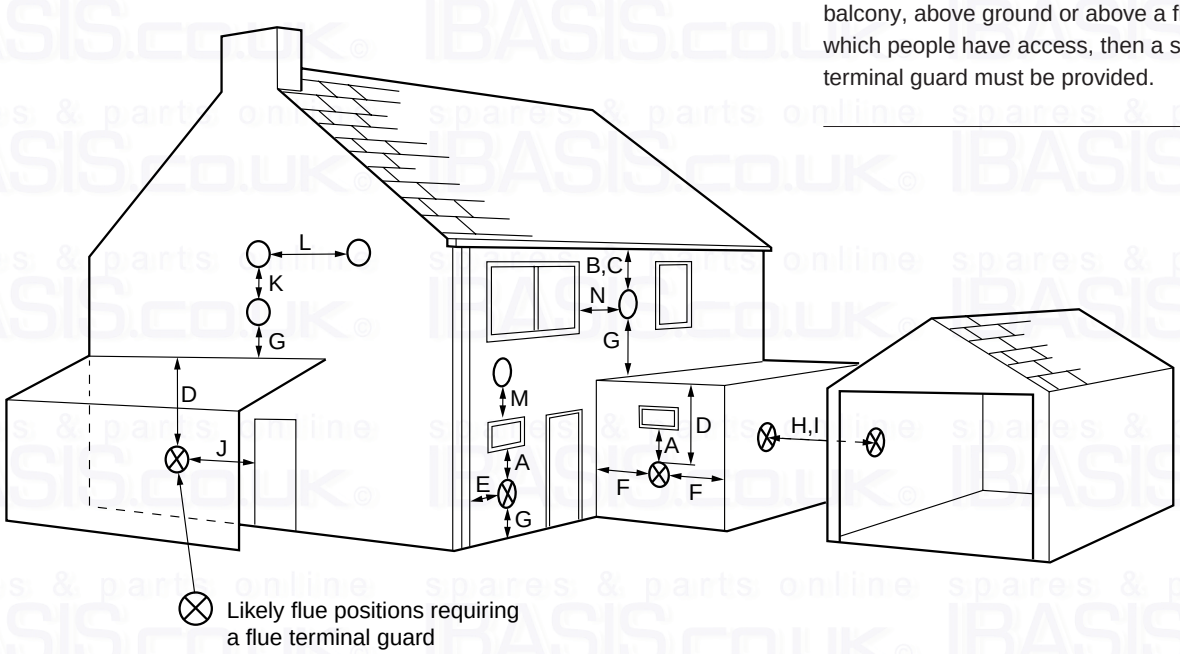


**Fig. 9**

| | Terminal Position with Minimum Distance (Fig. 9) | (mm) |
|---|---|---|
| A | Directly below an openable window, air vent or any other ventilation opening. | 300 |
| B | Below gutter, drain/soil pipe. | 25 |
| C | Below eaves. | 25 |
| D | Below a balcony/car port roof. | 25 |
| E | From vertical drain pipes and soil pipes. | 25 |
| F | From internal or external corners. | 25 |
| G | Above adjacent ground or balcony level. | 300 |
| H | From a surface facing a terminal. | 600 |
| I | Facing a terminals. | 1200 |
| J | From opening (door/window) in carport into dwelling. | 1200 |
| K | Vertically from a terminal on the same wall. | 1500 |
| L | Horizontally from a terminal on the same wall. | 300 |
| M | Above an opening, air brick, opening window etc. | 300 |
| N | Horizontally to an opening, air brick, opening window etc. | 300 |

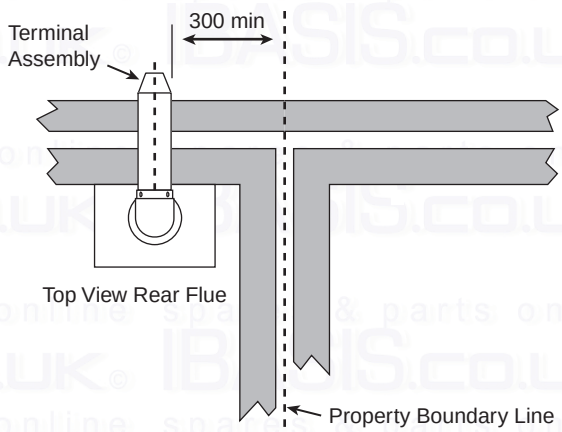

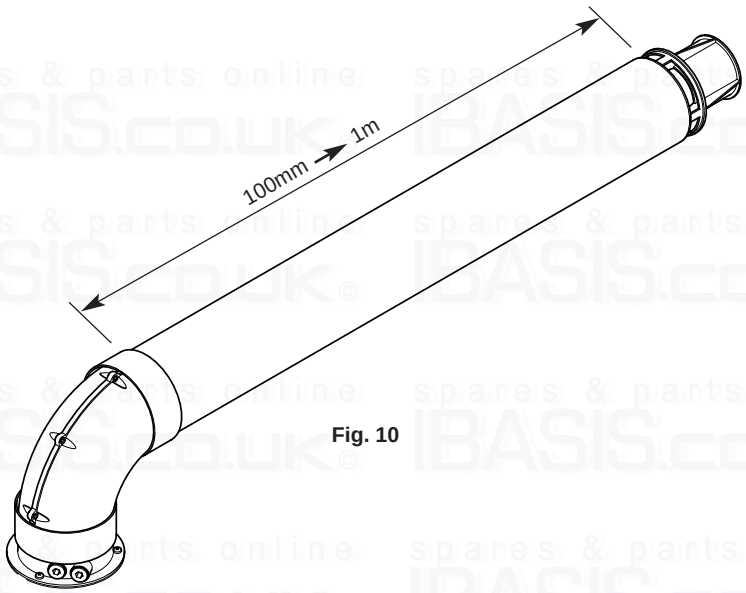


Fig. 10

## 7.9 Flue Dimensions

The standard horizontal flue kit allows for flue lengths between 100mm and 1m from elbow to terminal (Fig. 10).

**The maximum permissible equivalent flue length is:**

| | | |
|---|---|---|
| | **System 12e,18e,24e** | **5 metres** |
| | **System 28e** | **4 metres** |

## 7.10 Flue Terminal Trim

1. Once the flue is secure the trim can be fitted if required.

2. Remove the protective backing from the adhesive seal. Apply the seal to the rear of the trim flange (Fig. 11).

3. Locate the trim over the flue terminal and push it back to the wall to compress the seal (Fig. 12).

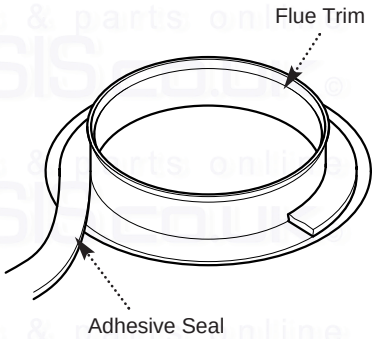


Fig. 11

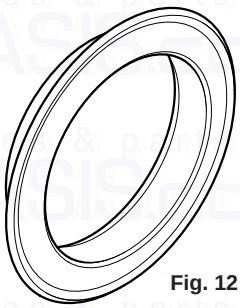

Fig. 12

## 7.11 Terminal Guard (Fig. 13)

1. When codes of practice dictate the use of terminal guards, they can be obtained from most Plumbers' and Builders' Merchants.

2. There must be a clearance of at least 50mm between any part of the terminal and the guard.

3. When ordering a terminal guard, quote the appliance name and model number.

4. The flue terminal guard should be positioned centrally over the terminal and fixed as illustrated.

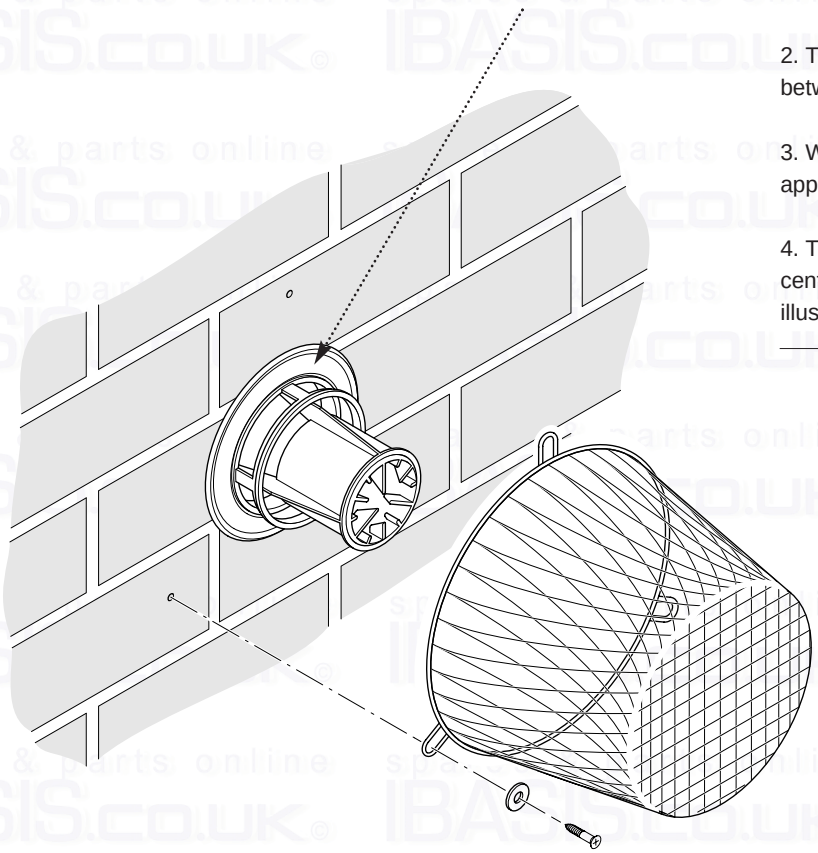

Fig. 13

spares & parts online IBASIS.CO.UK

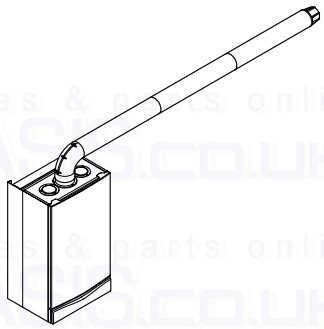

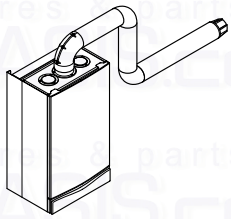

Maximum Length = 3m (28e) 4m (12e,18e,24e)
inc. 2 x 45° bends

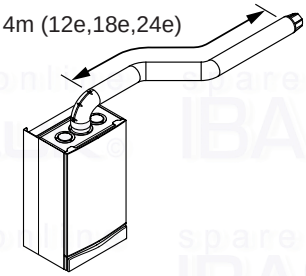

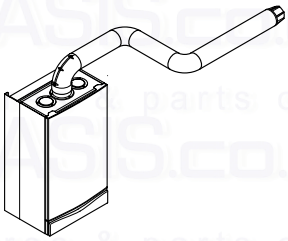

**Horizontal Flues**

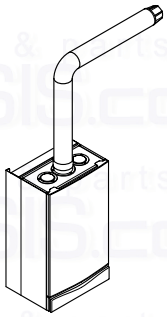

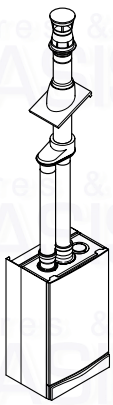

**Vertical Flues (Twin Pipe)**

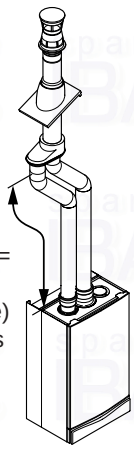

Maximum Length =
11m (28e)
14m (12e,18e,24e)
inc. 4 x 45° bends

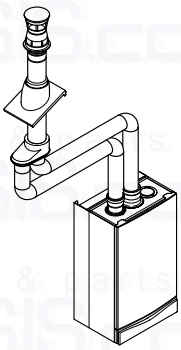

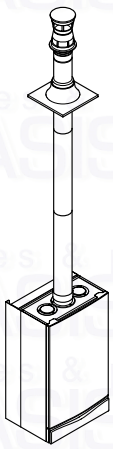

**Vertical Flues**

Maximum Length = 2m
inc. 2 x 90° bends

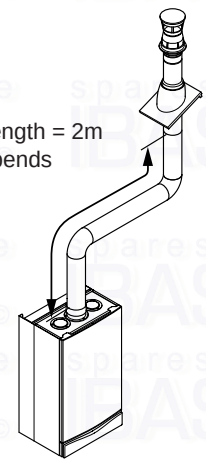

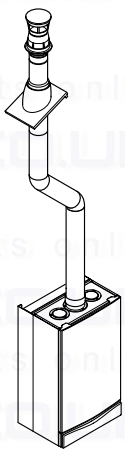

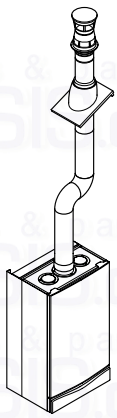

## 7.12 Flue Options

1. The Potterton Performa System can be fitted with flue systems as illustrated.

2. The standard flue is suitable only for horizontal applications.

3. Maximum permissible equivalent flue lengths are:-

| | 12e,18e,24e | 28e |
|---|---|---|
| Concentric | 5m | 4m |
| Vertical | 4m | 4m |
| Vertical Two-Pipe | 15m | 12m |

4. Any additional “in line” bends in the flue system must be taken into consideration.
Their equivalent lengths are:-
Concentric Pipes:

| | |
|---|---|
| 45° bend | 0.5 metres |
| 90° bend | 1.0 metres |

Twin Flue Pipe

| | |
|---|---|
| 45° bend | 0.25 metres |
| 90° bend | 0.50 metres |

The elbow supplied with the standard horizontal flue is not included in any equivalent length calculations

5. The illustrations opposite show examples of maximum equivalent lengths.

6. Instructions for guidance and fitting are included in each kit where appropriate.

## Fixing Template

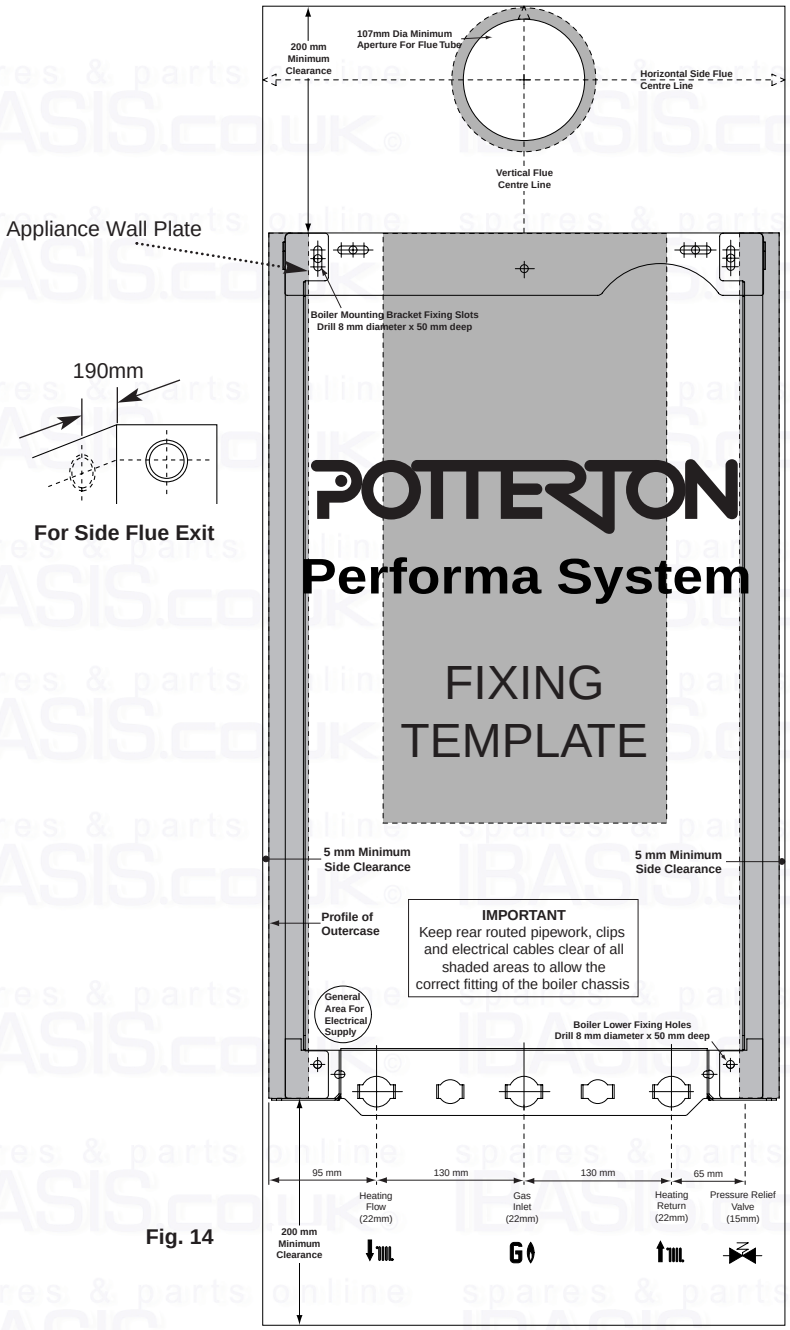


Fig. 14

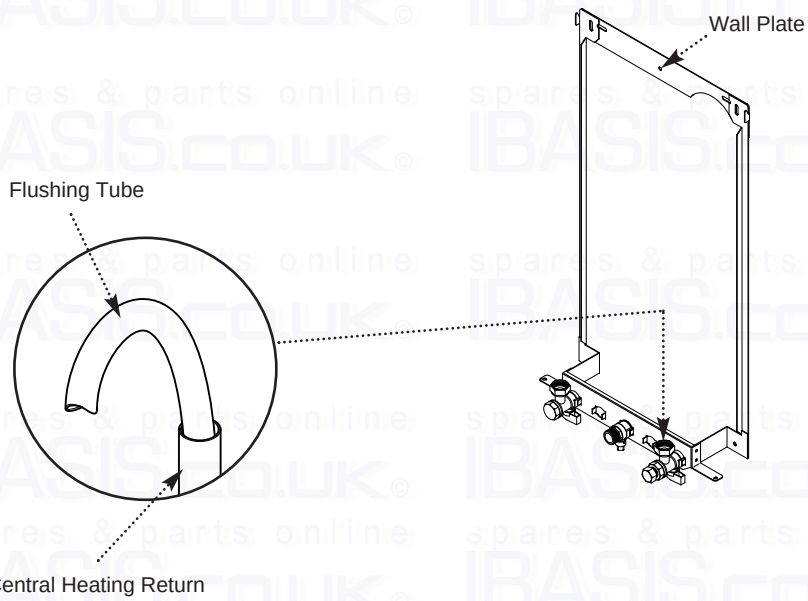


Fig. 15

# 8.0 Installation

## 8.1 Initial Preparation

**The gas supply, gas type and pressure must be checked for suitability before connection (see Section 7.6).**

1. After considering the site requirements (see Section 7.0) position the fixing template (Fig. 14) on the wall ensuring it is level both horizontally and vertically.

2. Mark the position of the two most suitable fixing slots for the wall plate and boiler lower fixing holes. It is preferable to use the horizontal fixing slots.

3. Mark the position of the centre of the flue hole (rear exit). For side flue exit, mark as shown.

4. Note the shaded area on the template. Pipework may be routed upwards behind the boiler, providing it does not conflict with the shaded area.

5. If required, mark the position of the gas and water pipes. Remove the template.

6. Cut the hole for the flue (minimum diameter 107mm).

7. Drill the wall as previously marked to accept the wall plugs supplied. Secure the wall plate using the fixing screws.

8. Using a spirit level ensure that the plate is level before finally tightening the screws.

9. Connect the gas and water pipes to the valves on the wall plate using the copper tails supplied. Ensure that the sealing washers are fitted between the connections.

## 8.2 Flushing

1. Connect a tube to the central heating flow or return pipe (Fig. 15).

2. Flush thoroughly (see System Details, Section 6.2).

## 8.3 Preparing The Boiler

1. Remove all packaging.

2. Stand the boiler on its base by using the rear lower edge as a pivot.

**NOTE:** A small amount of water may drain from the boiler in the upright position.

**Potterton declare that no substances harmful to health are contained in the appliance or used during appliance manufacture.**

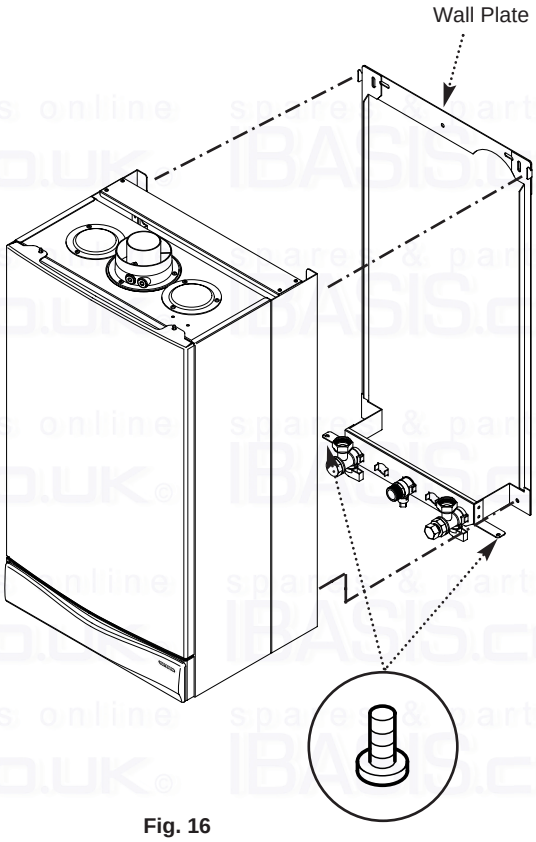


**Fig. 16**

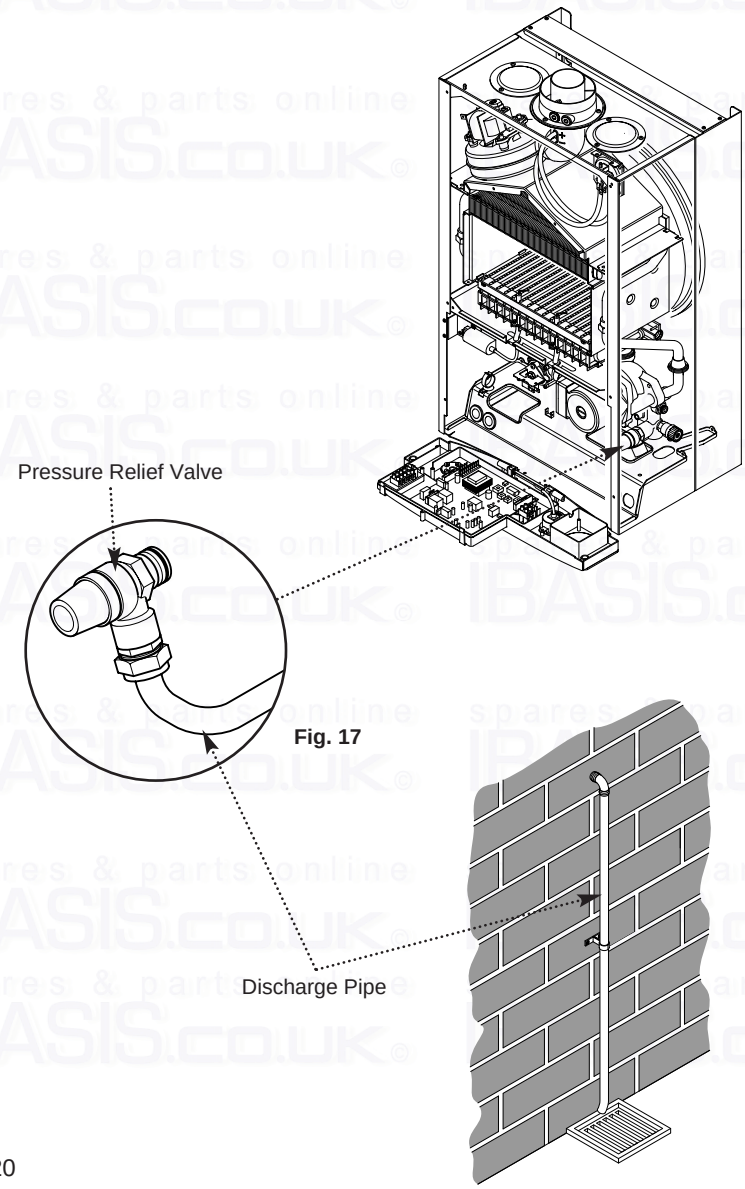


**Fig. 17**

# 8.0 Installation

## 8.4 Fitting The Boiler

1. Remove the sealing caps from the boiler connections.

2. Lift the boiler using the lower edges. Engage the slots at the top rear of the boiler on the wall plate (Fig. 16).

3. Insert the sealing washers between the valves and pipes on the wall plate and the boiler connections. **The rubber washers must be used on the gas connection.**

4. Tighten all the connections.

5. Secure the boiler side panels to the boiler wall plate flanges using the screws provided (Fig. 16).

## 8.5 Fitting the Pressure Relief Discharge Pipe (Fig. 17)

1. Remove the discharge pipe from the kit.

2. Determine the routing of the discharge pipe in the vicinity of the boiler. Make up as much of the pipework as is practical, including the discharge pipe supplied.

3. The pipework must be at least 15mm diameter and run continuously downwards to a discharge point outside the building. See section 6.6 for further details.

4. Utilising one of the sealing washers, connect the discharge pipe to the adaptor and tighten the nut.

5. Complete the discharge pipework and route it to the outside discharge point.

**IMPORTANT:** Make all soldered joints before connecting to the pressure relief valve.

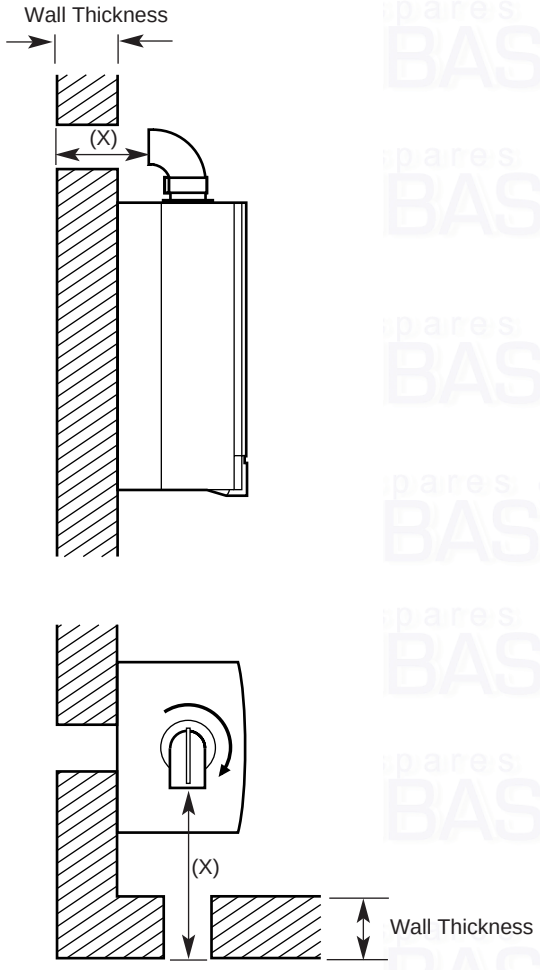


Fig. 18

## 8.6 Fitting The Flue

HORIZONTAL FLUE

1. The standard flue is suitable for lengths 100mm minimum to 1m maximum (measured from the edge of the flue elbow outlet).

**Rear Flue:** maximum wall thickness - 900mm
**Side Flue:** maximum wall thickness - 870mm

2. Locate the flue elbow on the adaptor at the top of the boiler. Set the elbow to the required orientation (rear, right or left).

3. Measure the distance from the outside wall face to the elbow (Fig. 18). This dimension will be known as 'X'.

4. Taking the air duct, mark dimension 'X' as shown (Fig. 19). Measure the length of waste material, and transfer the dimension to the flue duct (Fig. 19).

**IMPORTANT:** Check all measurements before cutting.

5. Remove the waste from both ducts. Ensure that the cut ends are square and free from burrs.

6. Remove the flue elbow from the adaptor.

7. Insert the flue duct into the air duct and pass them through the hole in the wall.

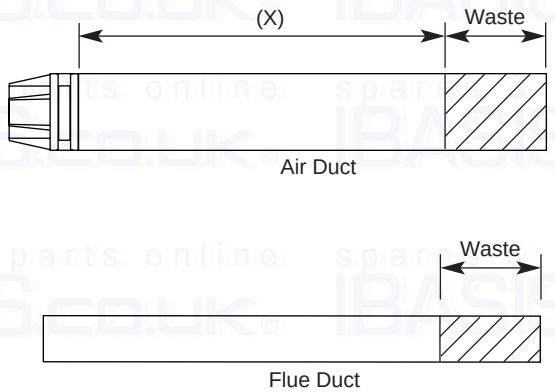


Fig. 19

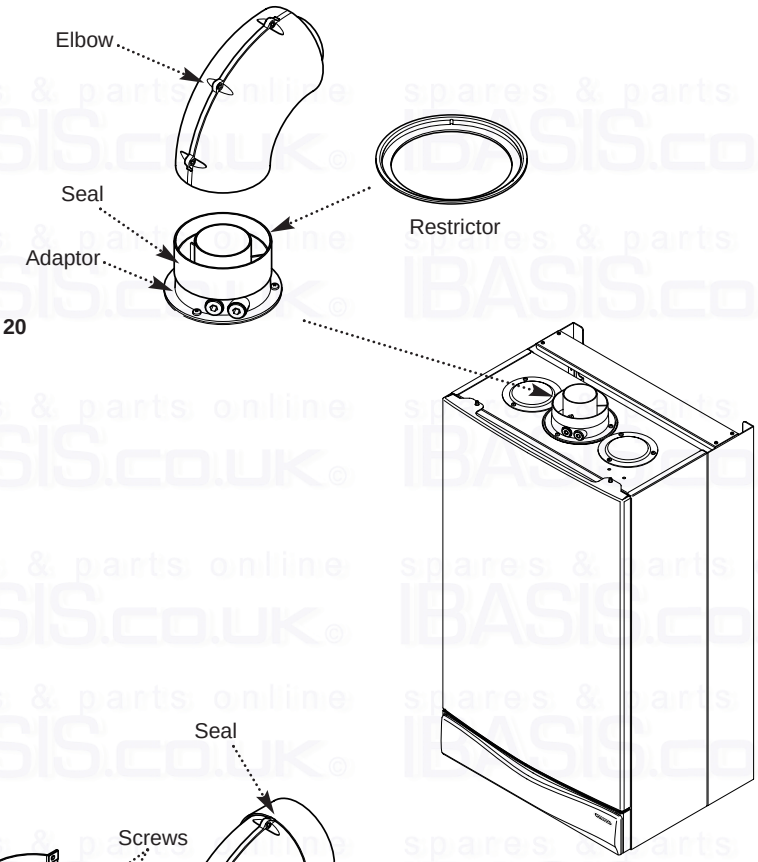


Fig. 20

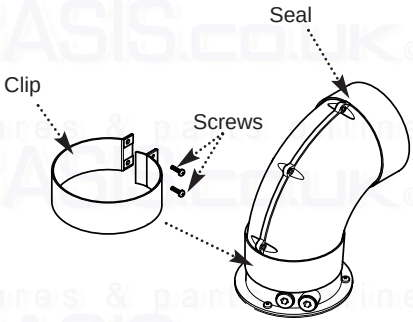


Fig. 21

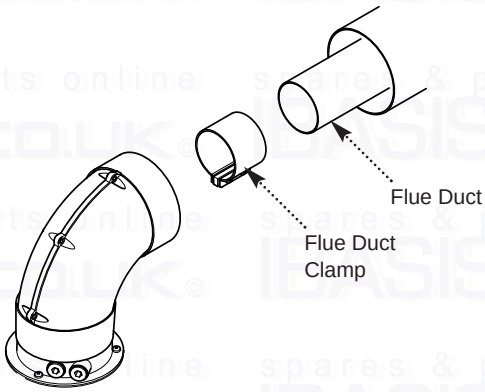


Fig. 22

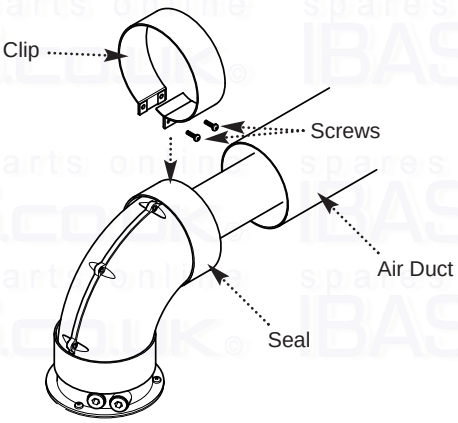


Fig. 23

## 8.6 Fitting the Flue (Cont)

**IMPORTANT:** If the equivalent flue length is greater than 1.5m the restrictor MUST be removed from the adaptor (Fig. 20).

8. Take one of the rubber seals and position it on the boiler flue adaptor. Engage the flue elbow on the adaptor and pull the sleeve up so that it equally covers the joint (Fig. 20).

9. Remove the screws from one of the clips provided. Prise the clip apart and fit it over the seal (Fig. 21). Set the elbow to the required angle.

10. Refit the screws to the clip and tighten them to secure the elbow. Take the second rubber seal and position it on the flue elbow.

11. Locate the flue duct clamp on the flue outlet elbow. Draw the flue duct out of the air duct, engage it in the clamp and tighten the screws (Fig. 22).

12. Draw the air duct out of the wall and align it with the elbow. Position the seal so that it equally covers the joint (Fig. 23).

13. Remove the screws from the second clip provided. Prise the clip apart and fit it over the seal. Refit the screws to the clip and tighten them (Fig. 23).

14. Where possible position the clips so that the screws are not visible.

15. Make good between the wall and air duct outside the building.

16. Fit the circular flue trim outside if required, and if necessary fit a terminal guard (see Section 7.10 & 7.11).

## 8.7 Extensions & Additional Elbows

1. The method of connecting any flue extensions or additional elbows is the same as that for connecting the standard flue and 90° elbow as described above.

2. If, for example, when a flue extension is connected to a 90° elbow the flue duct will project from the air duct at the unconnected end by the same amount as the flue duct spigot does from the elbow . Further elbows or extensions can then be added to this.

3. Similarly, a concentric flue can be connected to the boiler adaptor in the same manner as it does to the elbow to provide a vertical flue.

4. The additional 90° elbow available is identical to the elbow supplied with the standard flue. 45° elbows are of the same principle.

5. Extensions can be cut according to the requirements of the installation.

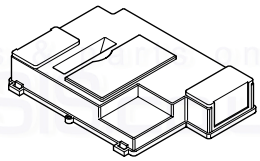


Fig. 25

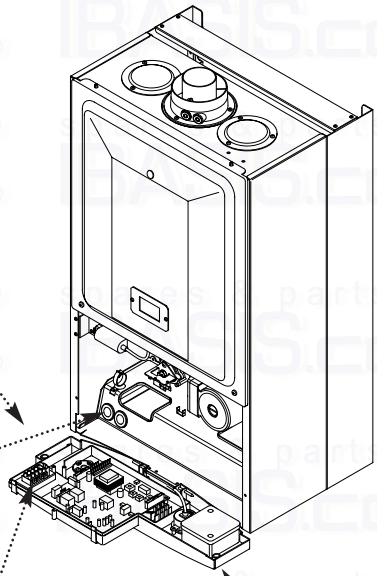

Fig. 24

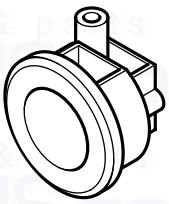

Fig. 26

Cable Clamp

Facia Panel

Internal Fuse

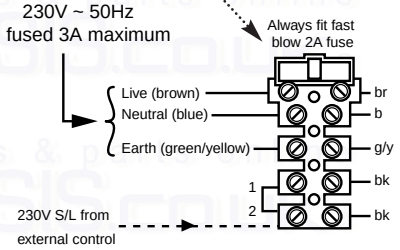


Terminal Block

Fig. 27

**Functional Flow Diagram**

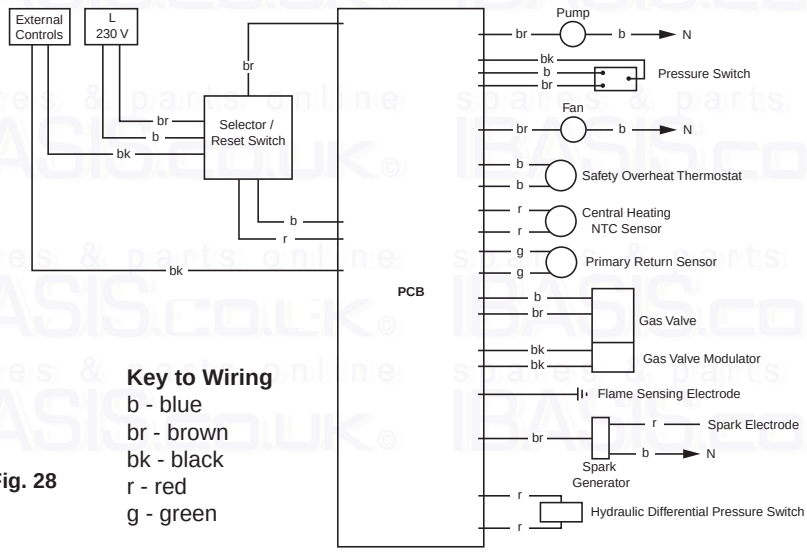


**Key to Wiring**
b - blue
br - brown
bk - black
r - red
g - green

Fig. 28

## 8.8 Making The Electrical Connections

To connect the mains input cable proceed as follows:-

1. Slacken the facia securing screws and lift the outercase panel so that its securing tabs are clear of the facia. Remove the panel.

2. Remove the screws securing the facia panel and hinge it down (Fig. 24).

3. Remove the control box cover securing screws. Disengage the barbs on the control box from the cover. Remove the cover (Fig. 25).

4. Slacken the cable clamp on the LH side of the boiler chassis (Fig. 26). Insert the cable through the clamp and route it to the terminal block.

5. Slacken the screws in the terminal block, connect the input cable, and tighten the screws.

6. If an external control is to be connected it can be done at this point. Run the input cable from the external control through the second cable clamp on the boiler chassis. Refer to the instructions supplied with the control.

7. To connect external control(s) remove the link between terminals 1 & 2. The switched output from the external control must be connected to terminal 2 (Fig. 27).

**IMPORTANT:** The external control **MUST** be suitable for 230V switching and fused 3A maximum

8. Ensure that both mains input and, where fitted, external control input cables have sufficient slack to allow the control box to drop down. Tighten the cable clamp(s) on the boiler chassis.

## 8.9 Preliminary Electrical Checks

1. Prior to commissioning the boiler preliminary electrical system checks should be carried out.

2. These should be performed using a suitable meter, and include checks for Ground Continuity, Resistance to Ground, Short Circuit and Polarity.

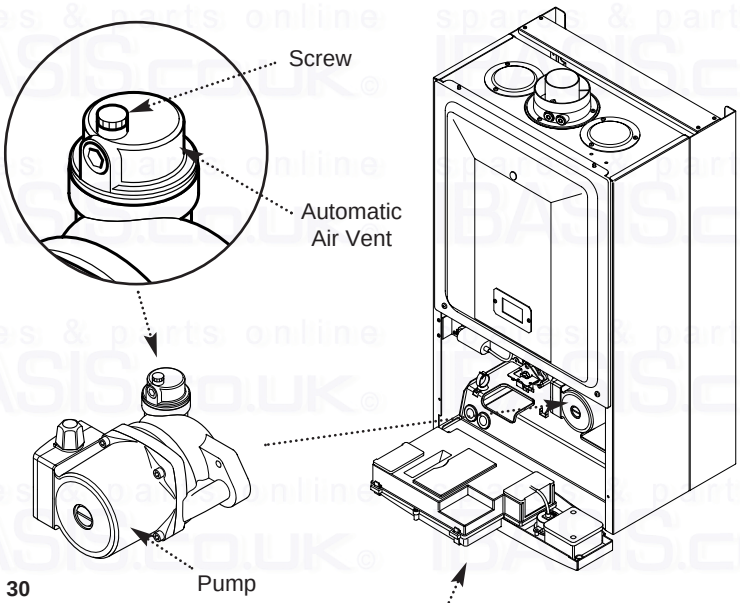


Fig. 30

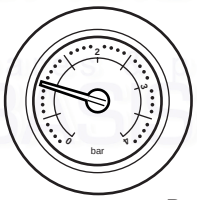


Fig. 31

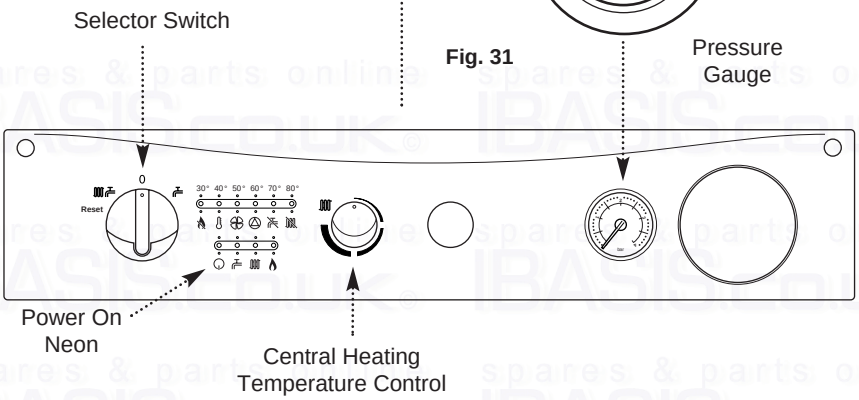


Fig. 32

## 9.1 Commissioning the Boiler

1. Reference should be made to BS 5449 when commissioning the boiler.

2. Ensure that the filling loop is connected and open, then open the heating flow and return valves on the boiler.

3. Open the screw on the automatic air vent (Fig. 30).

4. The system must be flushed in accordance with BS 7593 and the flushing agent manufacturers instructions.

5. Pressurise the system to 0.2 bar then close and disconnect the filling loop.

6. Turn the gas supply on and purge the system according to BS 6891.

7. Test for gas soundness.

8. If at any time during commissioning it is required to terminate a particular cycle, e.g. the pump overrun period, turn the selector to the Off position and then back to the On position ( ) (Fig. 32).

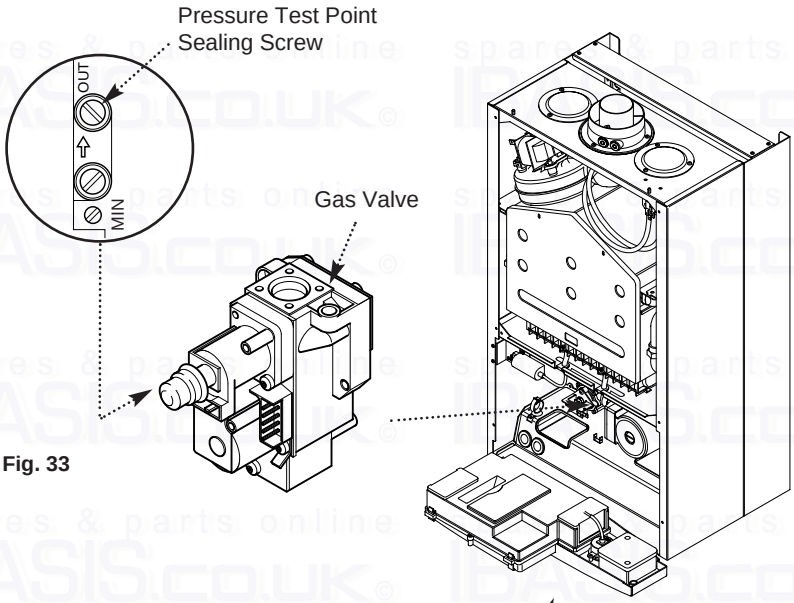


Fig. 33

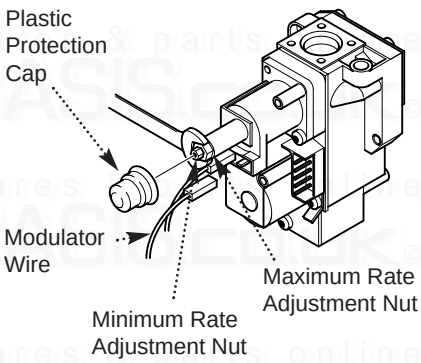


Fig. 34

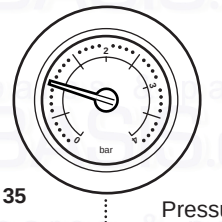


Fig. 35

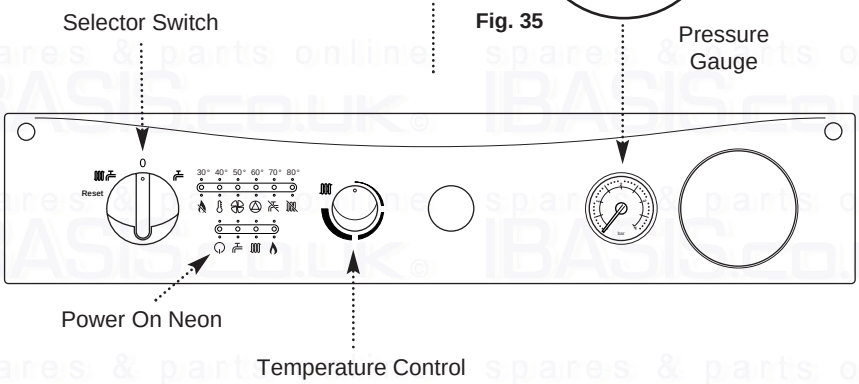


Fig. 36

## 9.2 Checking the Burner Pressure

1. Turn on the gas and electrical supplies to the boiler and ensure that all external controls are calling for heat.

2. Set the temperature control to maximum and the selector switch to the Off position (Fig. 36).

3. Slacken the pressure test point sealing screw on the gas valve and connect a pressure gauge (Fig. 33).

4. Undo the screws securing the inner door panel. Lift the panel slightly to disengage it from the studs on top of the case.

5. Turn the selector switch fully anticlockwise against the spring pressure to position R and hold for 2 seconds to reset the boiler.

6. Turn the selector switch to the Cental Heating and Domestic Hot Water position ( ). The power On neon ( ) will illuminate (Fig. 36).

7. The pressure should be as quoted in Section 4.0 Technical Data. If not, check that the gas supply pressure is correct (Natural Gas 20mbar, Butane 30mbar and Propane 37mbar).

8. The pressure can be adjusted if required.

9. To check and set minimum pressure first remove one of the modulator wires.

**Adjusting the Pressure** (Fig 34)

10. Remove the plastic protection cap from the pressure adjustment nuts on the valve.

11. The smaller nut (5mm) adjusts minimum pressure and the larger nut (8mm) maximum pressure.

12. Using a suitable spanner adjust the relevant nut until the correct pressure is achieved.

13. Once the pressure has been set turn the boiler off and disconnect the pressure gauge.

14. Tighten the pressure test screw and refit the modulator to the valve. Reassemble in reverse order.

spares & parts online IBASIS.CO.UK

# 10.0 Completion

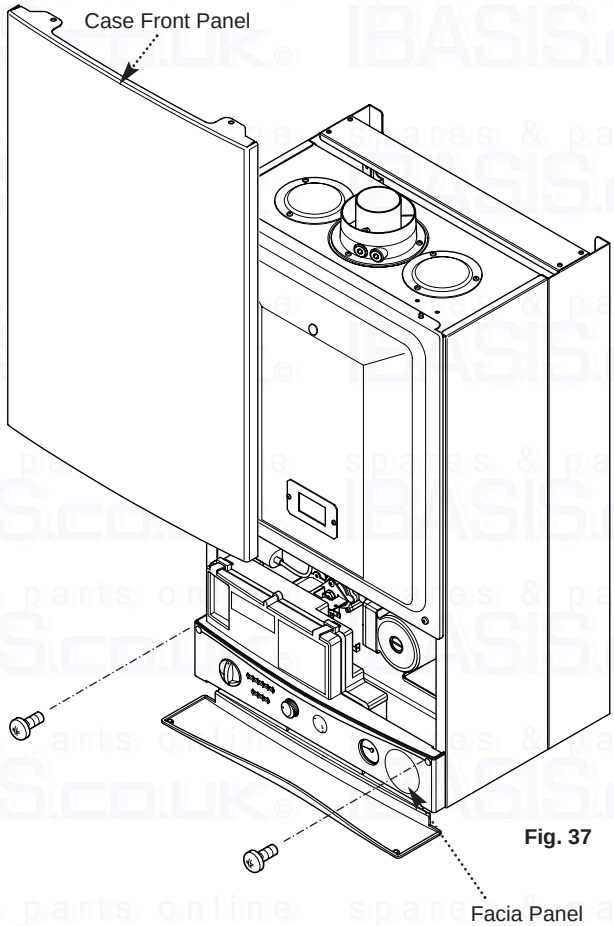


Fig. 37

## 10.1 Completion

1. Hinge the facia panel upwards and refit the case front panel. Secure them with the screws previously removed (Fig. 37).

2. Instruct the user in the operation of the boiler and system, explaining the operational sequence.

3. Carefully read and complete all sections of the “Benchmark” Installation, Commissioning and Service Record Log Book that are relevant to the appliance and installation. The details of the Log Book will be required in the event of any warranty work. The Log Book must be handed to the user for safe keeping and each subsequent regular service visit recorded.

4. Hand over the Users Operating, Installation and Servicing Instructions and the Log Book, giving advice on the necessity of regular servicing.

spares & parts online IBASIS.CO.UK

# 11.0 Servicing the Boiler

## 11 .1 Annual Servicing

1. For reasons of safety and economy, it is recommended that the boiler is serviced annually. Servicing must be performed by a competent person.

2. After servicing, complete the relevant section of the “Benchmark” Installation, Commissioning and Service Record Log Book. This should be in the possession of the user.

3. Ensure that the boiler is cool.

4. **Ensure that both the gas and electrical supplies to the boiler are isolated.**

5. Slacken the screws securing the facia panel. Lift the outercase panel so that its securing tabs are clear of the facia. Remove the panel (Fig. 38).

6 Remove the facia securing screws and hinge the panel down.

7. Remove the screws (2 on 12e, 18e, 24e - 4 on 28e) securing the inner door panel. Lift the panel slightly to disengage it from the studs on top of the case (Fig. 39).

8. Note the positions of the two sensing tubes on the outlet elbow and three wires on the fan motor and remove them (Fig. 40).

9. Slacken the screws on the outlet sealing collar. Ease the collar upwards as far as possible (Fig. 40).

10. Remove the four screws securing the combustion box door and remove the door (Fig. 39).

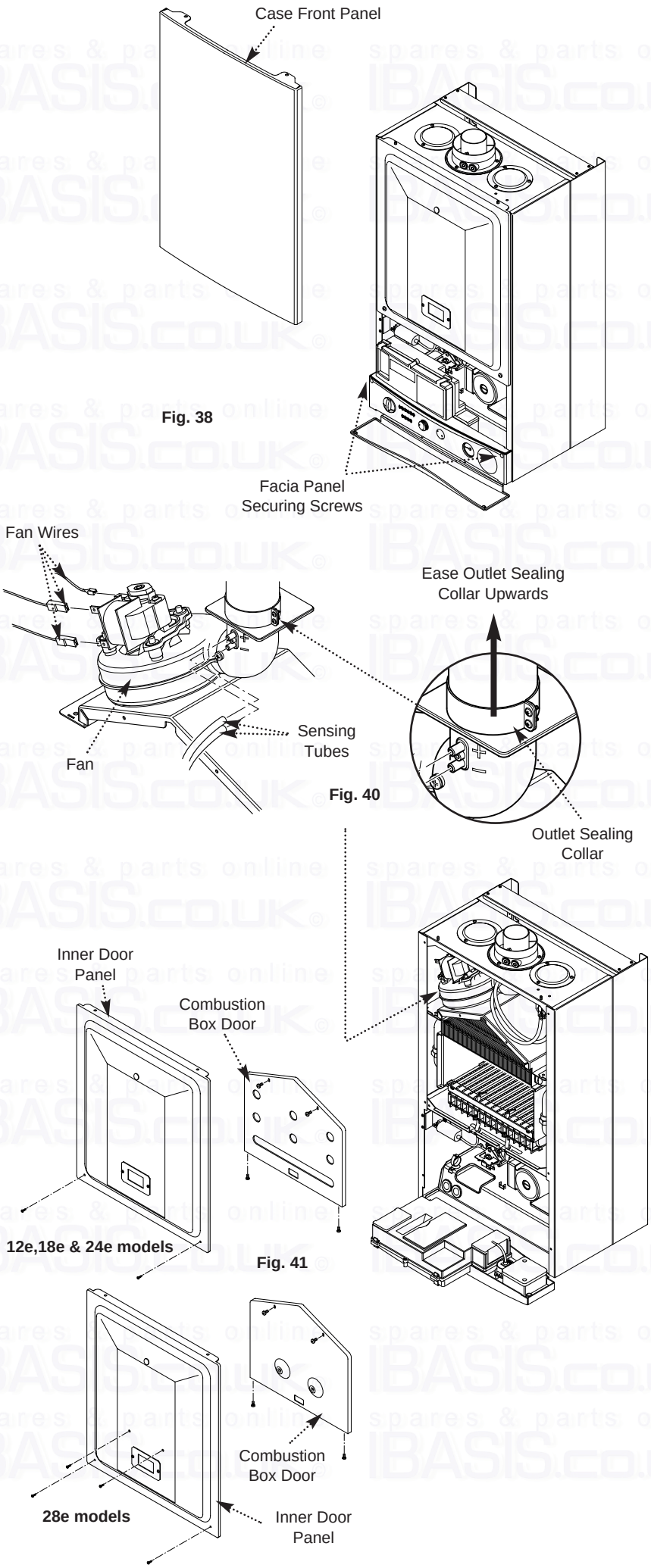


Fig. 38

Fig. 40

Fig. 41

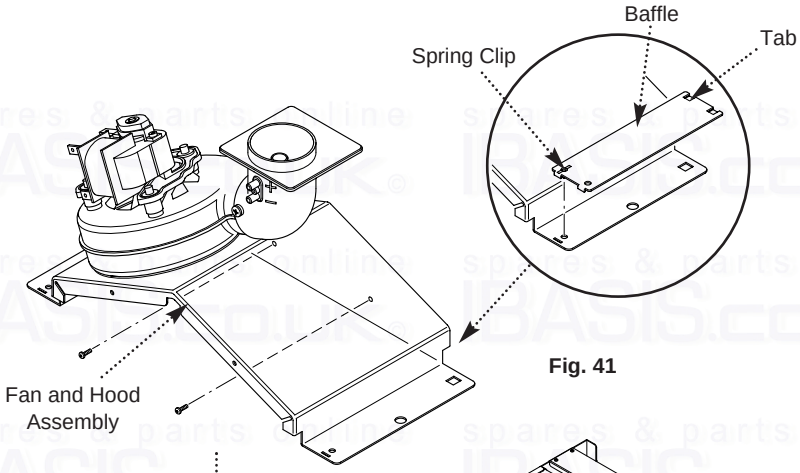


Fig. 41

Fig. 42

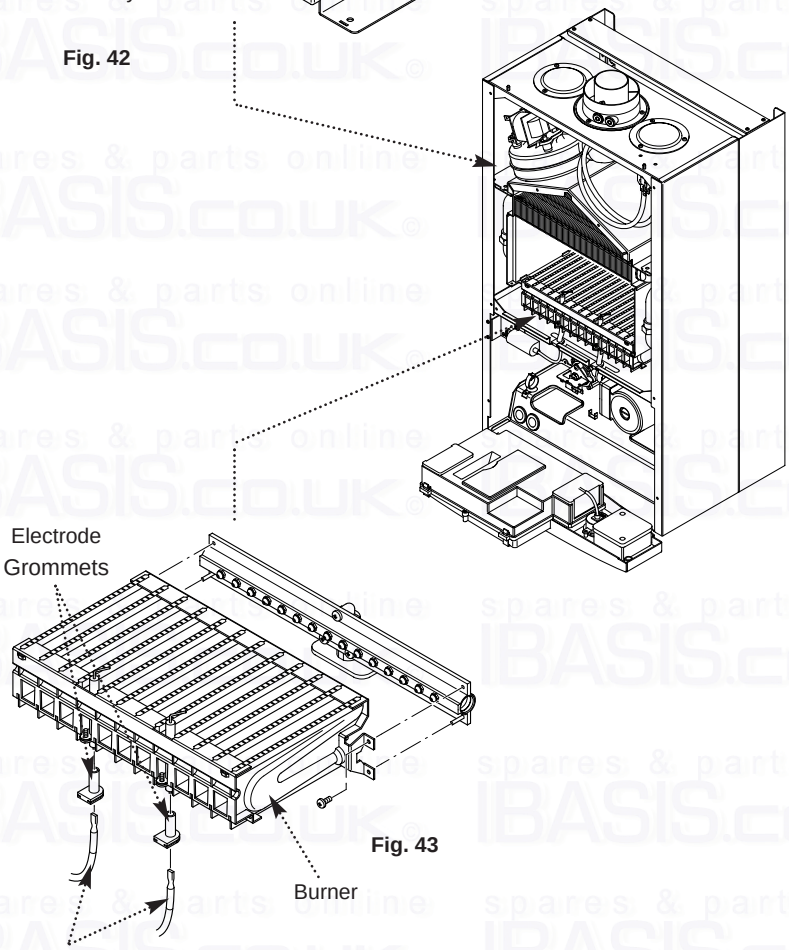


Fig. 43

# 11.0 Servicing the Boiler

## 11.1 Annual Servicing (Cont)

11. Remove the spring clips retaining the air box side baffle plates. Disengage the tabs on the baffles from the slots in the fan hood (Fig. 41).

12. Undo the screws securing the fan and hood to the appliance back panel. Draw the assembly forwards (Fig. 42).

13. Undo the screws securing the burner to the injector manifold (28e model only). Draw the burner out of the combustion box, pulling the electrode grommets from the slots in the combustion box lower panel (Fig. 43).

14. Disconnect the electrode leads and grommets from the electrodes. Completely remove the burner (Fig. 43).

15. Brush any deposits from the injectors. Do not use a pin or wire to clean them.

16. Brush the burner blades and venturis and clean the combustion box.

17. Ensure that the heat exchanger fins are clear of any obstruction.

18. Check that the pressure vessel charge is 0.5bar and reassemble in reverse order of dismantling.

19. Turn the selector switch fully anticlockwise against the spring pressure to position R and hold for 2 seconds to reset the boiler before recommissioning.

20. Complete the relevant section of the “Benchmark” Installation, Commissioning and Service Record Log Book and hand it back to the user.

# 12.0 Changing Components

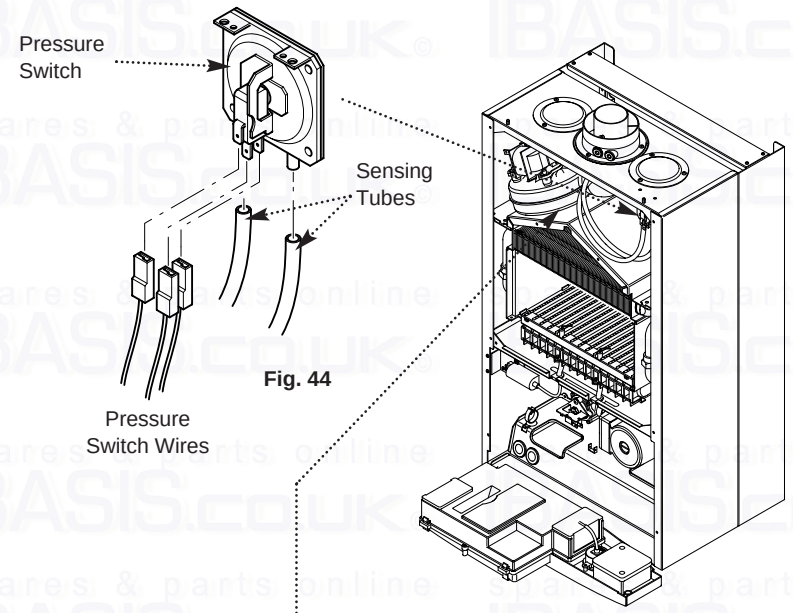


Fig. 44

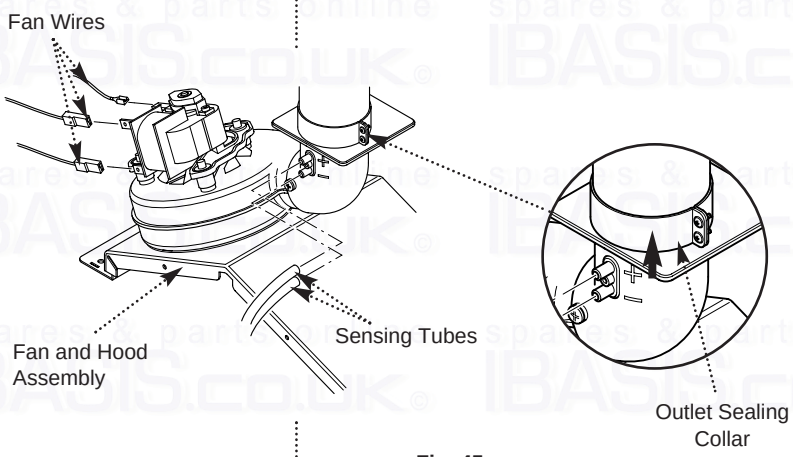


Fig. 45

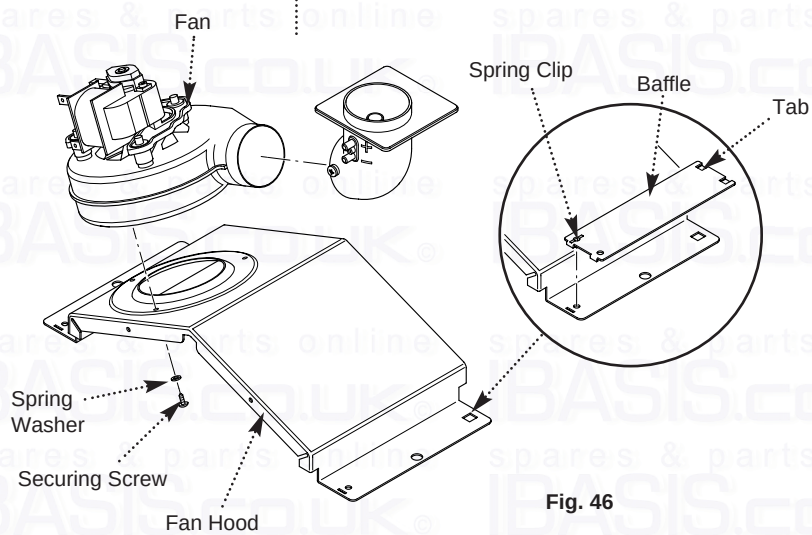


Fig. 46

**IMPORTANT:** When changing components ensure that both the gas and electrical supplies to the boiler are isolated before any work is started. When the new component has been fitted turn the selector switch fully anticlockwise against the spring pressure to position R and hold for 2 seconds to reset the boiler before recommissioning.

See Section 11.1 “Annual Servicing” for removal of case panel, door etc.

## 12.1 Pressure Switch (Fig. 44)

1. Note the positions of the two sensing tubes and three wires and remove them.

2. Remove the two screws holding the pressure switch to the combustion box top panel.

3. Fit the new pressure switch and reassemble all components in reverse order of dismantling.

## 12.2 Fan (Figs. 45 & 46)

1. Note the positions of the two sensing tubes on the outlet elbow and three wires on the fan motor and remove them.

2. Slacken the screws on the outlet sealing collar. Ease the collar upwards as far as possible.

3. Remove the four screws securing the combustion box door and remove the door.

4. Remove the spring clips retaining the air box side baffle plates. Disengage the tabs on the baffles from the slots in the fan hood.

5. Undo the screws securing the fan hood to the appliance back panel, and draw the fan and hood assembly forwards.

6. Remove the screws and spring washers securing the fan to the hood.

7. Fit the new fan to the hood using the screws and spring washers previously removed.

8. Reassemble in reverse order of dismantling.

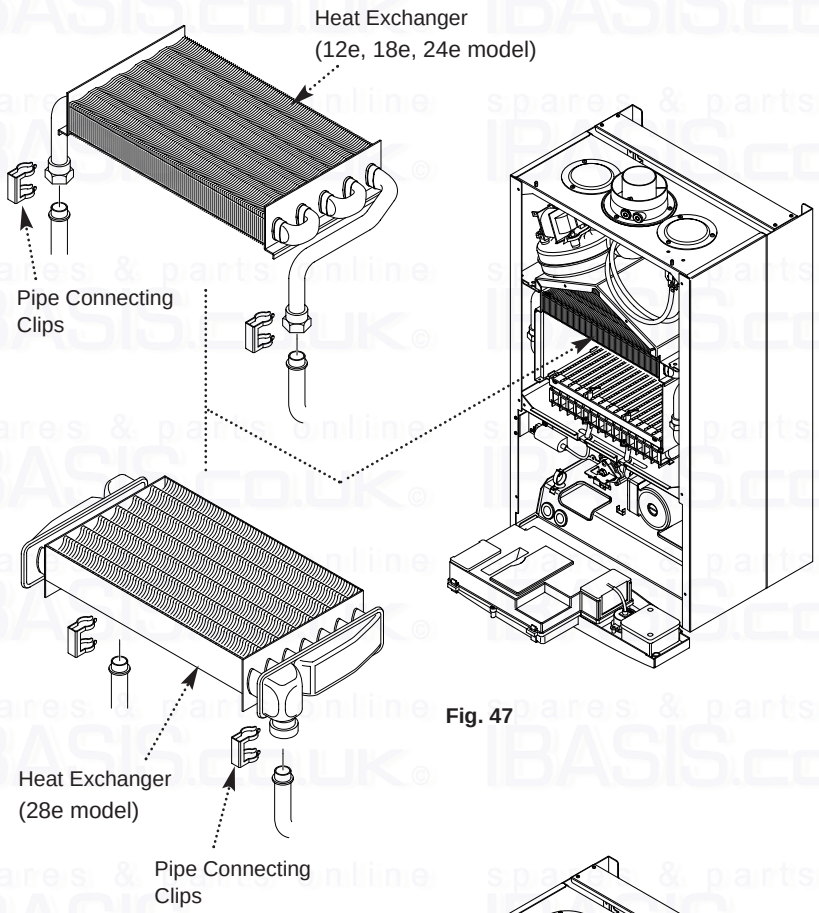


Fig. 47

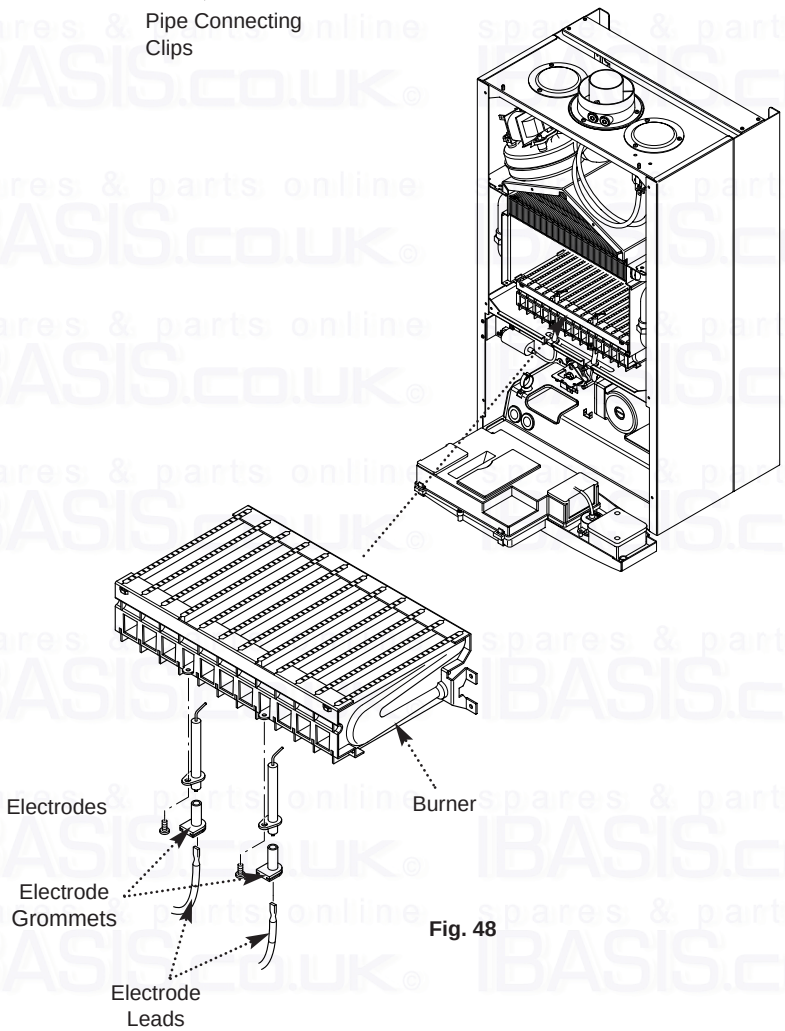


Fig. 48

## 12.3 Heat Exchanger (Fig. 47)

1. Note the positions of the two sensing tubes on the outlet elbow and three wires on the fan motor and remove them.

2. Slacken the screws on the outlet sealing collar. Ease the collar upwards as far as possible.

3. Remove the four screws securing the combustion box door and remove the door.

4. Remove the spring clips retaining the air box side baffle plates. Disengage the tabs on the baffles from the slots in the fan hood.

5. Undo the screws securing the fan hood to the appliance back panel, and draw the fan and hood assembly forwards.

6. Drain the primary circuit. Prise the two pipe connecting clips off the joints in the flow and return pipes.

7. Lift the heat exchanger to disconnect the flow and return pipe joints. Withdraw it from the appliance, taking care not to damage the rear insulation piece.

8. Fit the new heat exchanger.

9. Reassemble in reverse order of dismantling, and repressurise the system.

## 12.4 Burner (Fig. 48)

1. Remove the four screws securing the combustion box door and remove the door.

2. Undo the screws securing the burner to the injector manifold (28e model only). Draw the burner out of the combustion box, pulling the electrode grommets from the slots in the combustion box lower panel.

3. Disconnect the electrode leads and grommets from the electrodes. Completely remove the burner.

4. Undo the screws securing the electrodes to the burner. Examine the condition of the electrodes, replacing if necessary. Fit the electrodes to the new burner.

5. Engage the burner location brackets over the studs on the injector manifold and reassemble in reverse order.

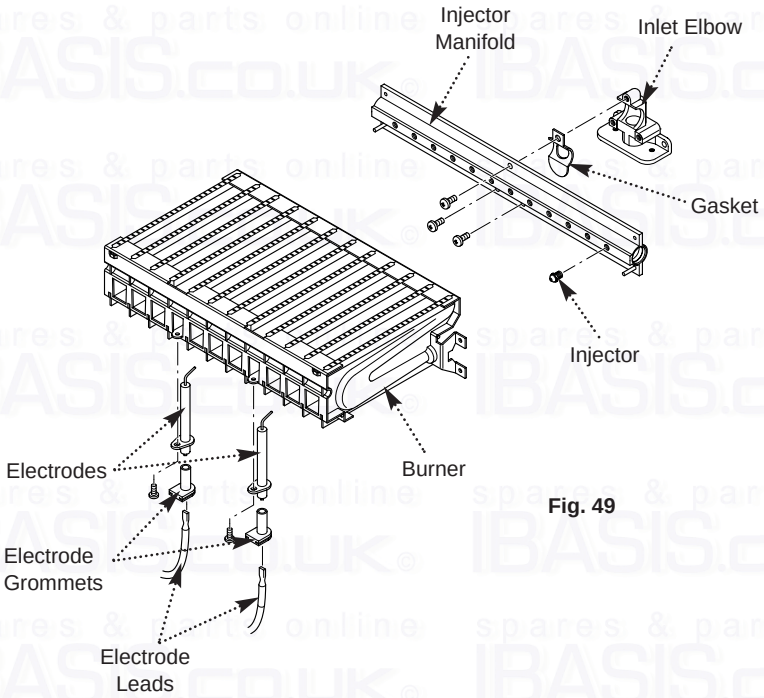


Fig. 49

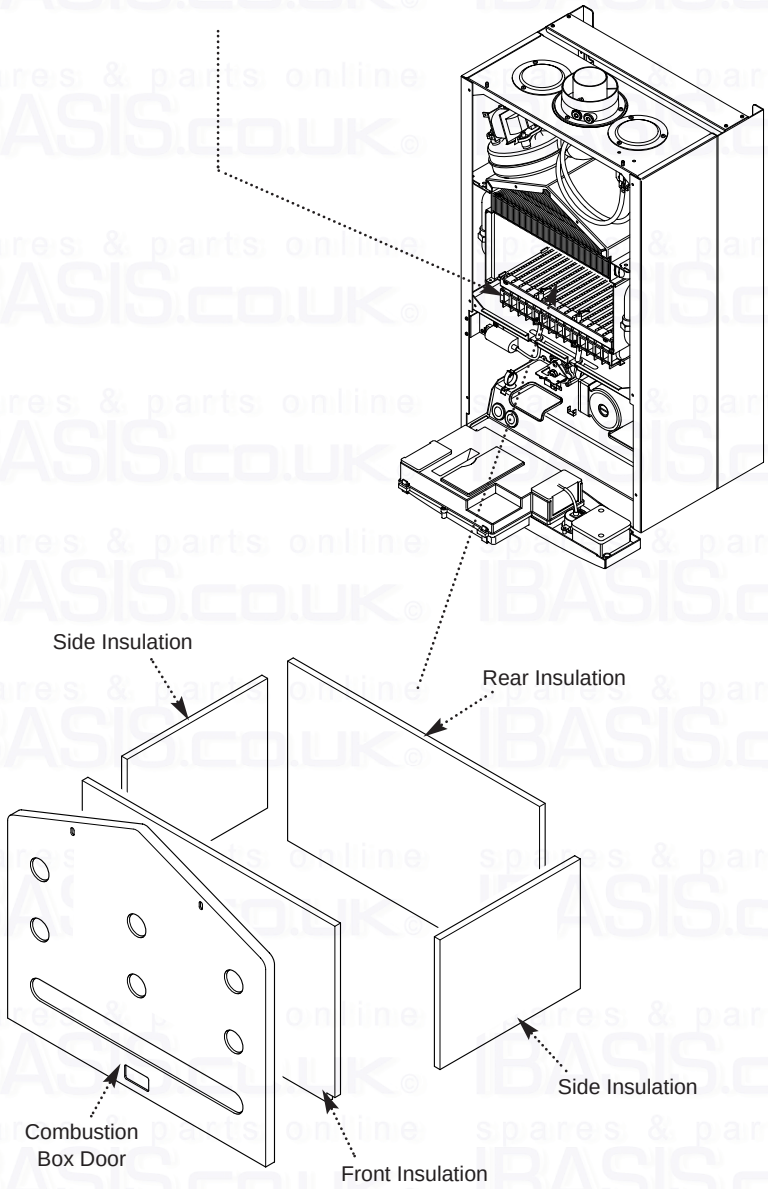


Fig. 50

## 12.5 Injectors (Fig. 49)

1. Remove the burner as described in Section 12.4.

2. Undo the screws securing the injector manifold to the inlet elbow and remove the manifold.

3. Unscrew and replace injectors as required and examine the sealing gasket, replacing as necessary. Reassemble in reverse order.

## 12.6 Electrodes (Fig. 49)

1. Remove the four screws securing the combustion box door and remove the door.

2. Undo the screws securing the burner to the injector manifold (28e model only). Draw the burner out of the combustion box, pulling the electrode grommets from the slots in the combustion box lower panel.

3. Disconnect the lead and grommet from the electrode being replaced. Undo the securing screw and withdraw the electrode to the burner.

4. Reassemble in reverse order.

## 12.7 Insulation (Fig. 50)

1. Remove the four screws securing the combustion box door and remove the door.

2. Slide the side insulation pieces carefully out of their carriers.

3. To replace the rear insulation piece it is necessary to remove the heat exchanger as described in Section 12.3 and slide out the side pieces.

4. The combustion box door insulation piece can be replaced by carefully bending up the two retaining tabs.

5. Replace all insulation pieces and reassemble in reverse order.

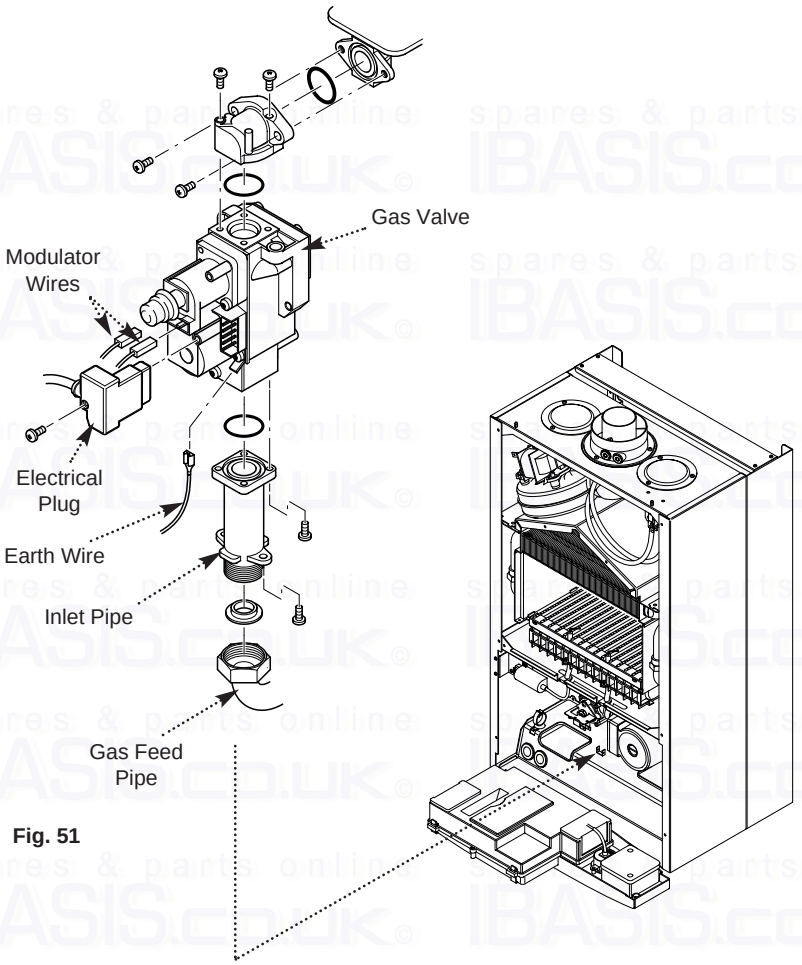


Fig. 51

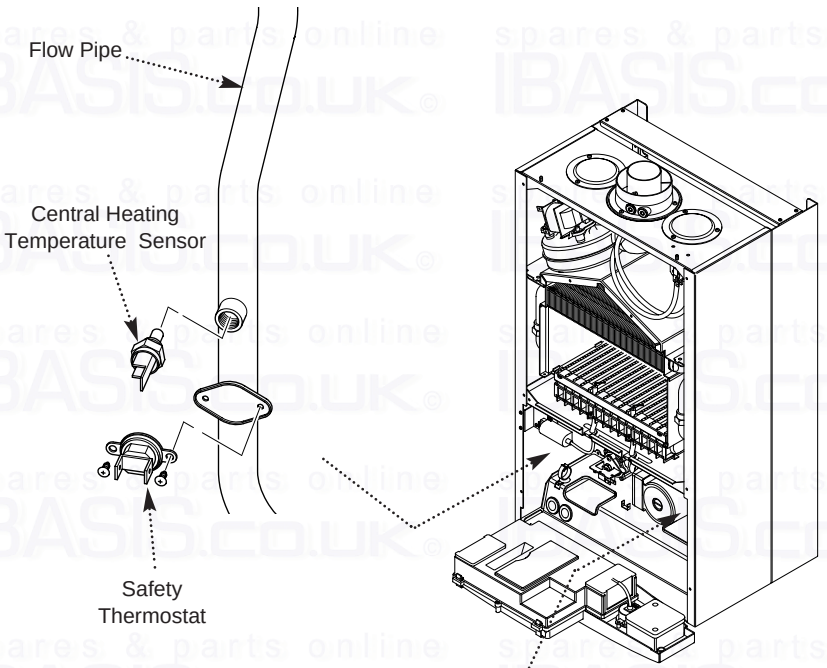


Fig. 52

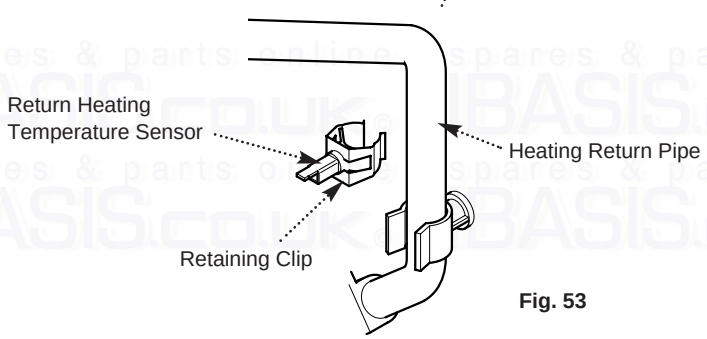


Fig. 53

## 12.8 Gas Valve (Fig. 51)

1. Undo the nut on the gas feed pipe under the boiler.

2. Remove the securing screws and hinge the facia panel down.

3. Disconnect the earth wire and pressure sensing pipe from the valve. Undo the screw securing the electrical plug to the valve and disconnect the plug. Disconnect the wires from the valve modulator.

4. Remove the screws securing the inlet pipe flange to the boiler bottom panel and those securing the outlet manifold to the burner manifold.

5. Remove the valve from the boiler.

6. Note the orientation of the inlet pipe and outlet manifold. Undo the securing screws and remove the pipe and manifold.

7. Examine the 'O' ring seals for damage, replacing as necessary.

8. Fit the inlet pipe and outlet manifold to the new valve, ensuring that the 'O' ring seals are in place.

9. Reassemble in reverse order and check the burner pressure as described in Section 9.2.

## 12.9 Central Heating Temperature Sensor (Fig. 52)

1. Ease the retaining tab on the sensor away and disconnect the electrical plug.

2. Unscrew the sensor from it's pocket and reassemble in reverse order. The plug will only fit one way.

## 12.10 Safety Thermostat (Fig. 52)

1. Pull the electrical connections off the thermostat.

2. Remove the screws securing the thermostat to the mounting plate on the flow pipe.

3. Reassemble in reverse order. The thermostat is not polarised - either wire can fit either terminal on the thermostat.

## 12.11 Return Heating Temperature Sensor (Fig. 53)

1. Ease the retaining tab on the sensor away and disconnect the electrical plug.

2. Prise the sensor retaining clip off the pipe and remove the sensor from the clip.

3. Reassemble in reverse order.

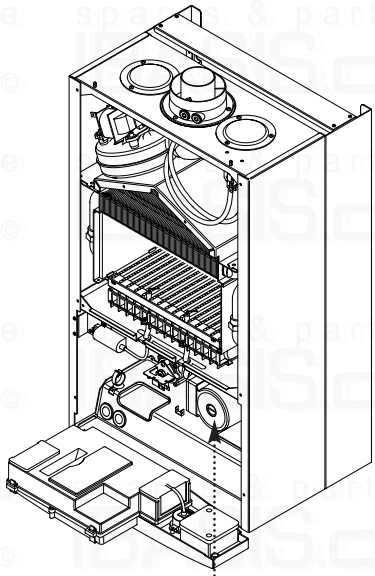

## 12.12 Pump - Head Only (Fig. 54)

1. Drain the primary circuit and remove the socket head screws securing the pump head to the body and draw the head away.

2. Undo the screw on the pump wiring cover and remove the cover. Using a suitable flat bladed screw driver press the cable securing levers downwards to release each wire after noting their position.

3. A standard Grundfos replacement head can now be fitted. A Grundfos 15-50 head is suitable for the 12e,18e & 24e models. The 28e model requires a 15-60 head. Connect the wiring to the new head. **The pump speed must be set to 3** (Fig. 55).

4. Reassemble in reverse order.

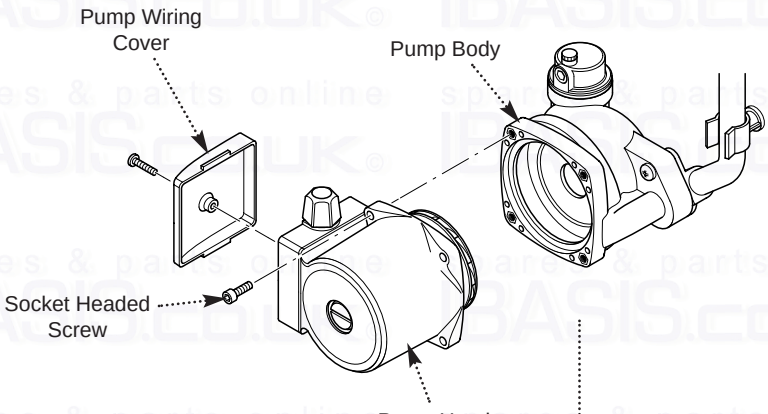


Fig. 54

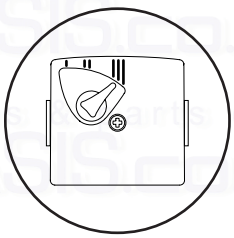

Pump Setting

Fig. 55

## 12.13 Pump - Complete (Fig. 56)

1. Drain the primary circuit and unscrew the automatic air vent from the pump body. Undo the two screws securing the body to the pipe and manifold and draw the pump forwards.

2. Undo the screw on the pump wiring cover and remove the cover. Using a suitable flat bladed screw driver press the cable securing levers downwards to release each wire after noting their position.

3. Connect the wiring to the new pump. Examine the 'O' ring seals on the return pipe and manifold, replacing if necessary.

4. Fit the air vent to the pump body and reassemble in reverse order.

## 12.14 Automatic Air Vent (Fig. 56)

1. Drain the primary circuit and unscrew the automatic air vent from the pump body.

2. Examine the 'O' ring seal, replacing if necessary, and fit it to the new automatic air vent.

3. Reassemble in reverse order.

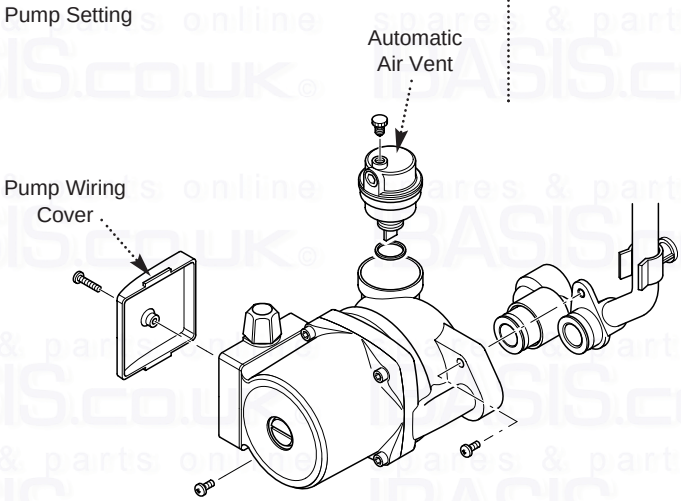


Fig. 56

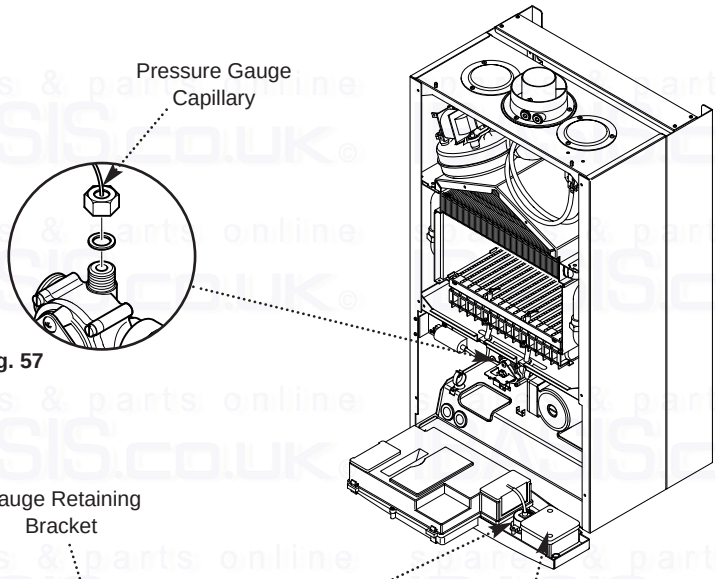


Fig. 57

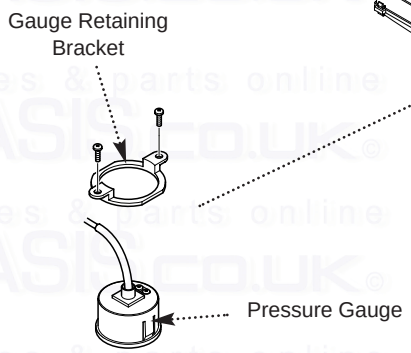


Fig. 58

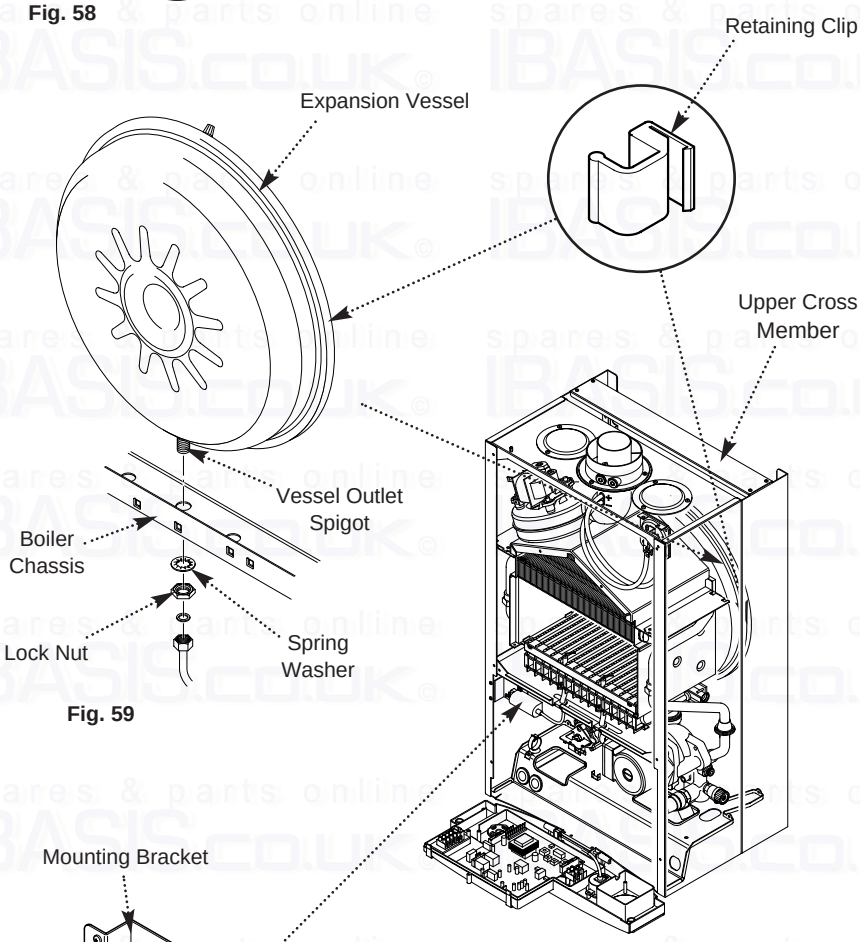


Fig. 59

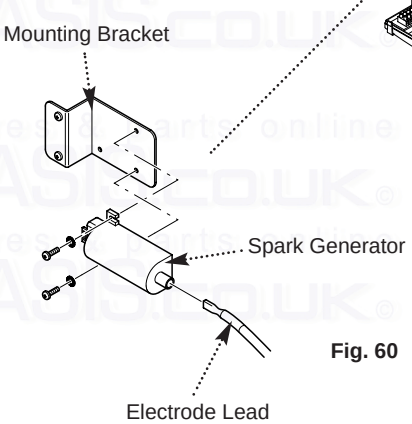


Fig. 60

## 12.15 Pressure Gauge (Figs. 57 & 58)

1. Drain the primary circuit and undo the nut on the pressure gauge capillary.

2. Remove the timer cover and ease the timer wiring aside. Undo the screws securing the gauge retaining bracket.

3. Remove the bracket and gauge assembly. Depress the barbs on the side of the gauge and remove the retaining bracket.

4. Reassemble in reverse order.

## 12.16 Expansion Vessel (Fig. 59)

1. To replace the expansion vessel it is necessary to remove the boiler from the wall.

**NOTE:** Alternatively a vessel of equivalent capacity can be fitted on the system return pipe as close as possible to the boiler.

2. Drain the system and undo all gas and water connections. Remove the flue elbow.

3. Lift the boiler off the wall plate and lay it on either side on a clean flat surface.

4. Undo the nut on the vessel outlet spigot, and remove the locknut and spring washer securing the spigot to the boiler chassis.

5. Undo the screws and remove the appliance upper cross member. Slide the expansion vessel out of the retaining clips.

6. Reassemble in reverse order. Fully recommission the appliance and system.

## 12.17 Spark Generator (Fig. 60)

1. Pull the electrode lead off the spark generator. Remove the screws and spring washers securing the generator to its mounting bracket.

2. Pull the rubber shroud off the generator input plug and disconnect the plug.

3. Reassemble in reverse order.

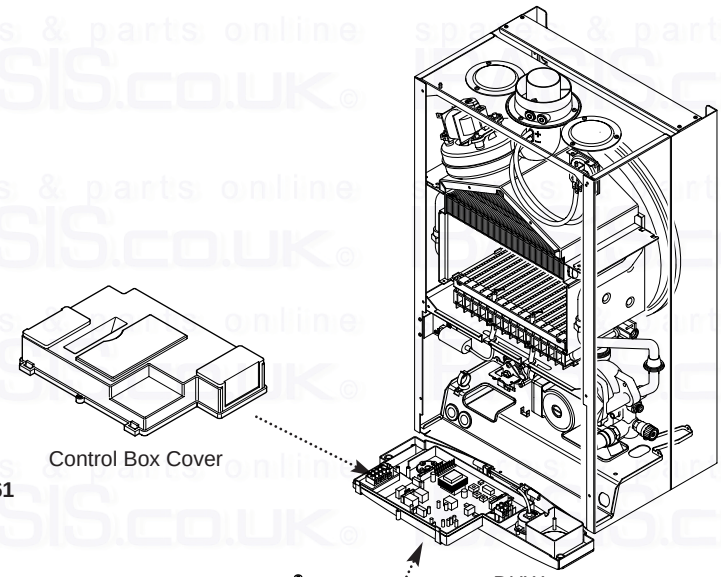


Fig. 61

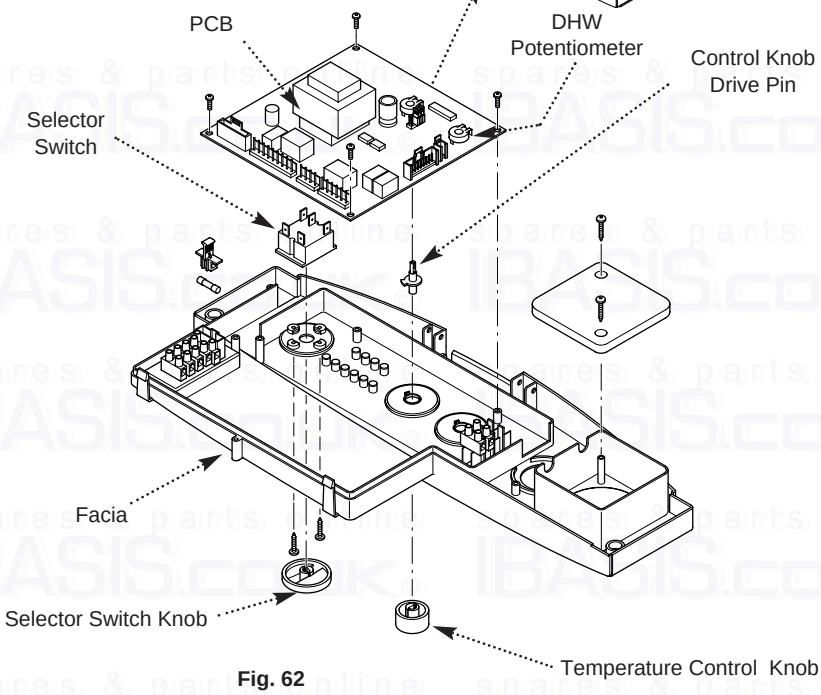


Fig. 62

## 12.18 Main PCB (Fig. 62)

1. Note the setting of the temperature control knob. Rotate the knob fully anticlockwise and carefully pull it off the drive pin.

2. Remove the screws securing the control box cover and release the cover retaining barbs from their slots. Disengage the rear of the cover from the control box hinge pin (Fig. 61).

3. Note the position of all plugs and wires on the PCB and disconnect them.

4. Undo the securing screws and remove the PCB. Transfer the control knob drive pin to the new PCB and turn it fully anticlockwise.

5. Reassemble in reverse order, ensuring that the temperature controller is reset to the previous position.

6. Ensure that the DHW potentiometer is fully anticlockwise once the new PCB is fitted.

## 12.19 Selector Switch (Fig. 62)

1. Note the setting of the selector switch knob and carefully pull it off the facia.

2. Remove the screws securing the control box cover and release the cover retaining barbs from their slots. Disengage the rear of the cover from the control box hinge pin.

3. Note the position of the electrical connections and the orientation of the switch. Remove the electrical connections.

4. Remove the screws securing the switch to the facia panel.

5. Fit the new switch, ensuring that it is correctly positioned and reassemble in reverse order.

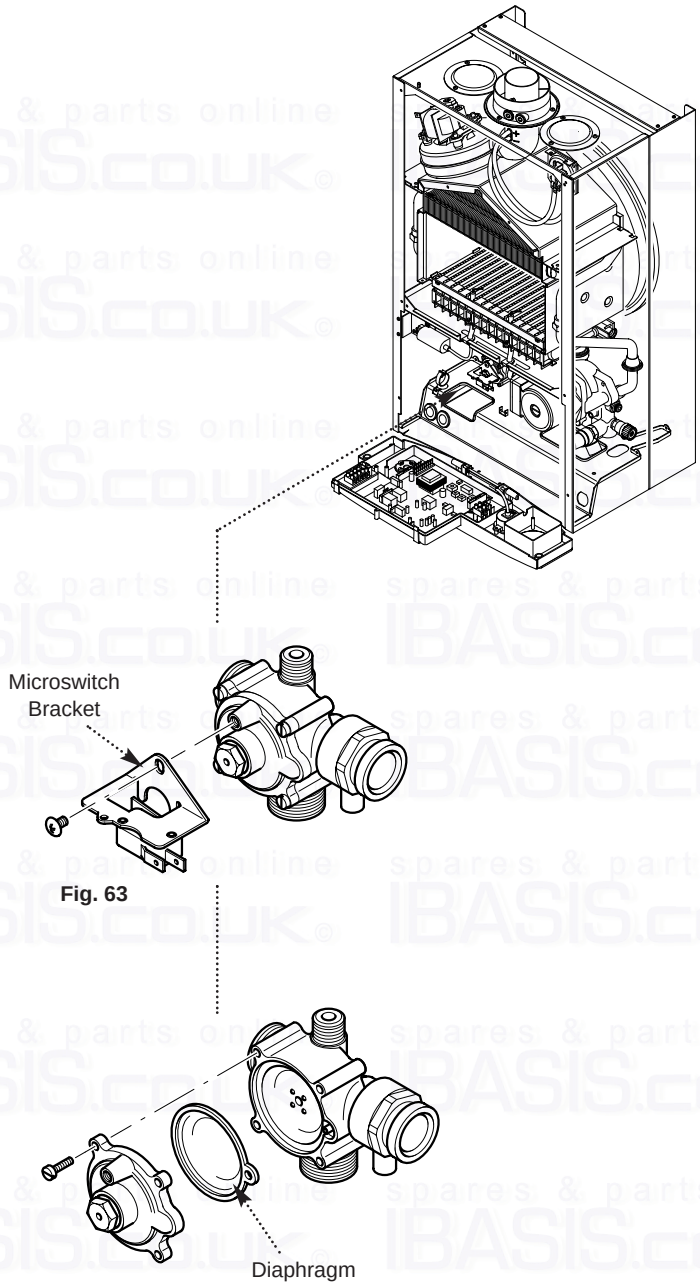


Fig. 63

Fig. 64

## 12.20 Central Heating Differential Valve (Figs. 63 & 64)

1. Drain the primary circuit.

2. Undo the screw securing the microswitch to the differential valve. Allow the microswitch to rest to one side.

3. Undo the pressure gauge capillary nut and heating flow pipe nut from the valve.

4. Prise off the bypass connecting clips and disconnect the heating flow tap. Undo the screws securing the valve to the boiler bottom panel. Remove the valve.

5. Remove the screws securing the cover from the valve body. Examine the condition of the diaphragm, spring and pushrod, replacing as necessary.

6. If required the complete valve assembly can be replaced.

7. Examine the sealing washers and 'O' ring on the pipes and capillary, replacing as necessary.

## 12.21 Central Heating Differential Valve Microswitch (Fig. 64)

1. Remove the two wires from the microswitch.

2. Undo the screw securing the microswitch to the valve body.

3. Reassemble in reverse order.

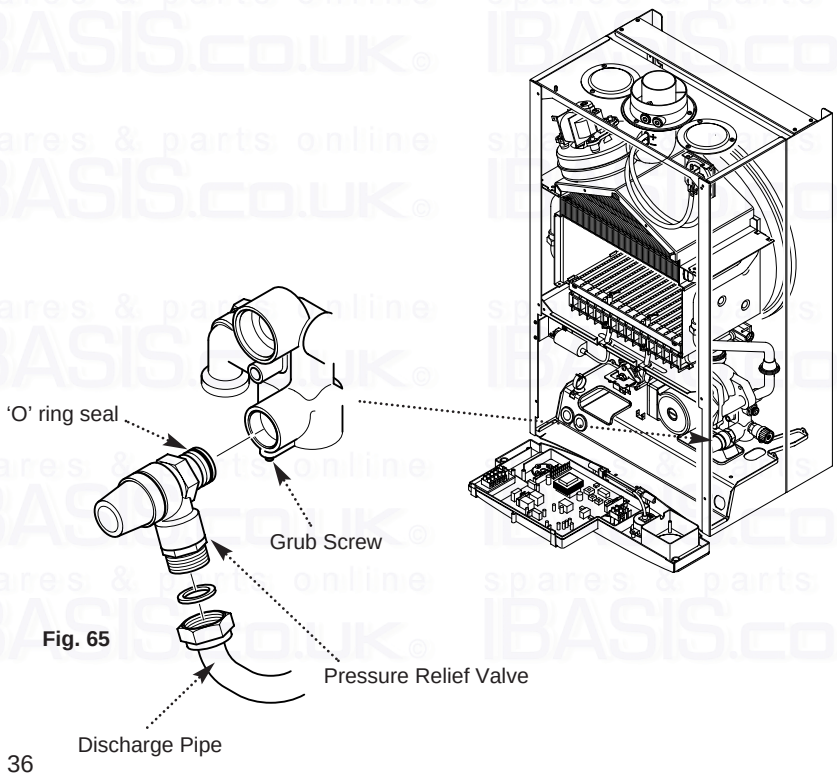


Fig. 65

## 12.22 Pressure Relief Valve (Fig. 65)

1. Drain the primary circuit.

2. Disconnect the discharge pipe from the valve. Using a suitable hexagon key undo the grub screw sufficiently to release the valve.

3. Note the orientation of the valve, rotate it and withdraw it from the manifold.

4. Fit the new valve and 'O' ring seal and set to the previously noted orientation. Reassemble in reverse order.

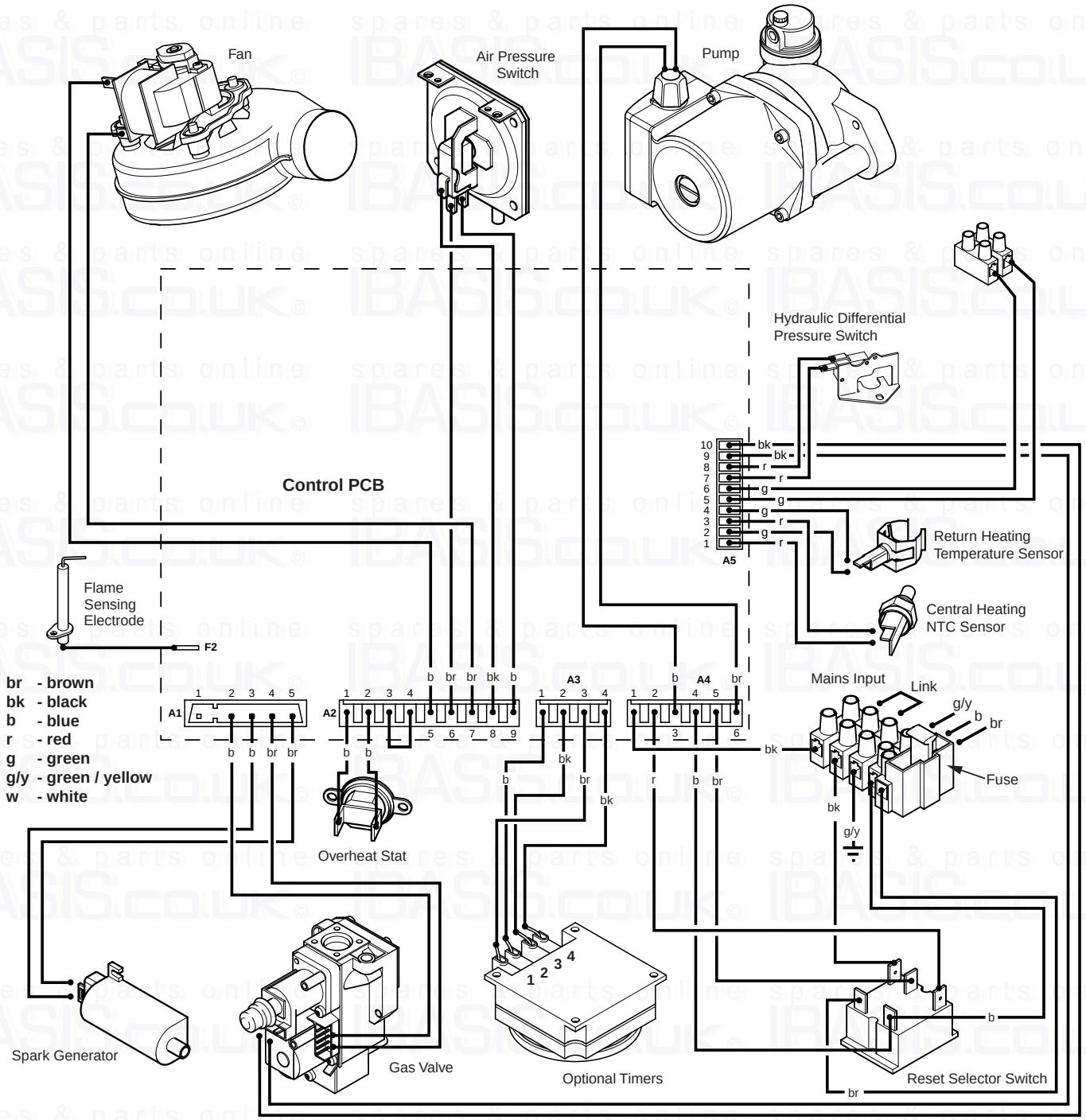
Fan
Air Pressure Switch
Pump
Hydraulic Differential Pressure Switch
Control PCB
Return Heating Temperature Sensor
Central Heating NTC Sensor
Flame Sensing Electrode
F2
Mains Input
Link
Fuse
Overheat Stat
Spark Generator
Gas Valve
Optional Timers
Reset Selector Switch
A1
A2
A3
A4
A5
br - brown
bk - black
b - blue
r - red
g - green
g/y - green / yellow
w - white

**Carry out initial fault finding checks**

1. Check that gas, water and electrical supplies are available at the boiler. Electrical supply = 230V ~ 50 Hz.
   CH water system pressurised to 0.5 bar when the boiler is cold. The preferred minimum gas pressure is 19.5mbar (natural gas), 27mbar (butane) or 36mbar (propane).
2. Carry out electrical system checks, i.e. Ground Continuity, Resistance to Ground, Short Circuit and Polarity with a suitable meter.
   **NOTE:** These checks must be repeated after any servicing or fault finding.
3. Ensure all external controls are calling for heat and check all external and internal fuses. Before any servicing or replacement of parts ensure the gas and electrical supplies are isolated.

Refer to Section 13.0 “Illustrated Wiring Diagram” for position of numbered terminals

**Central Heating -** Follow operational sequence

**NOTE:** When instructed to turn the selector to the reset position turn the selector switch fully anticlockwise against the spring pressure to position R and hold for 2 seconds to reset the boiler.

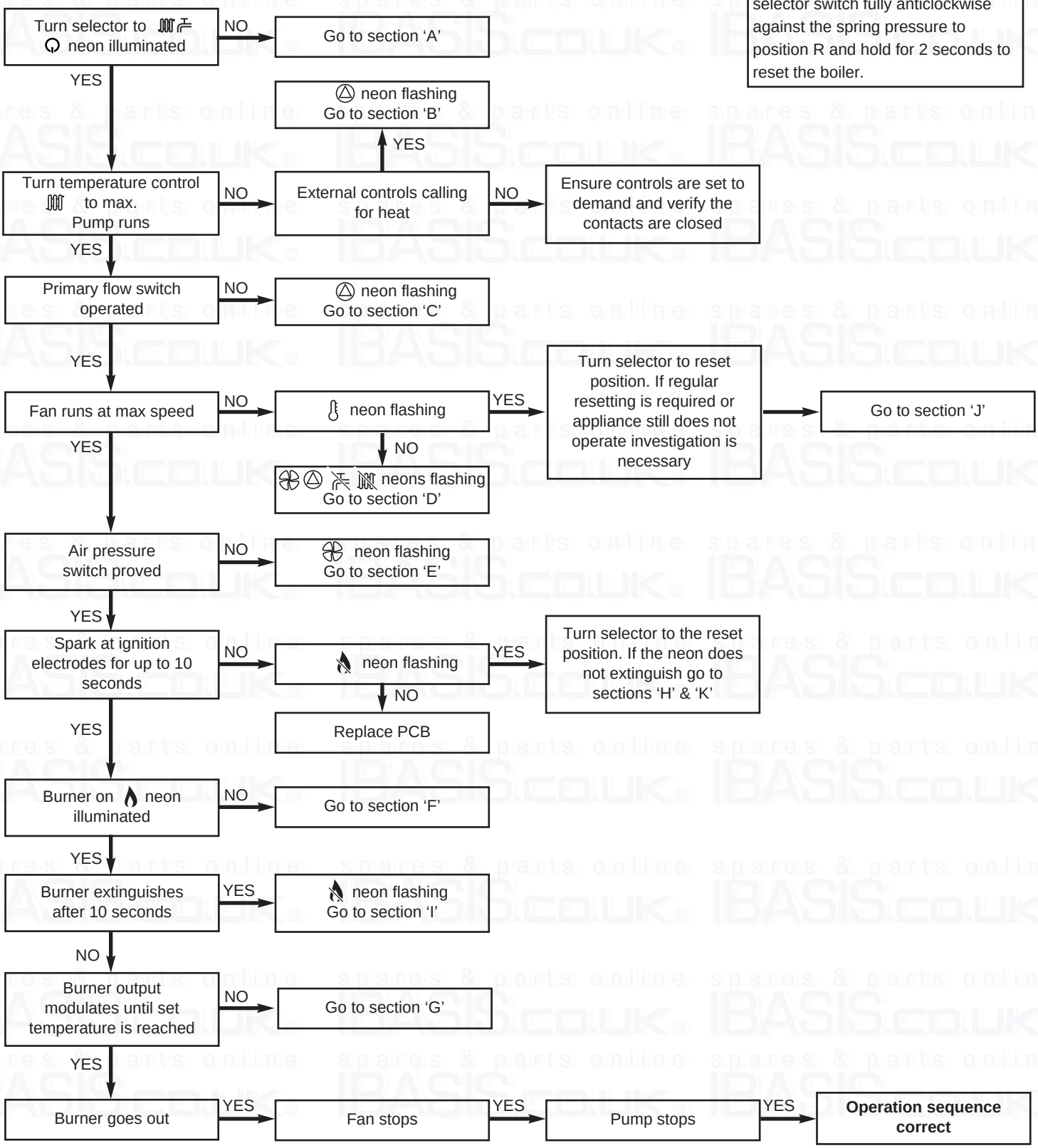

## Fault Finding Solutions Sections A to E

### A

Is there 230V at:

1. Main terminals L and N — NO → Check electrical supply
2. Main terminal fuse — YES → Replace fuse
3. Selector terminals a & b and a & 3. PCB - A4 connector terminals 4 & 5 — NO → Check wiring Replace selector

→ neon illuminated — NO → Replace PCB

### B

Is there 230V at:

1. Pump — NO → If pump jammed, release → Replace pump
2. PCB - A4 connector terminals 3 & 6 — NO → Replace PCB
   - YES → Change pump supply cable

### C

1. CH system pressure 0.5 to 1.5 bar — NO → Re-pressurise system
2. Check the tap of the automatic air vent is opened — NO → Open the automatic air vent
3. Primary flow valve diaphragm damaged — YES → Replace diaphragm
   - NO → Flow valve rod obstructed

### D

1. Continuity across flow microswitch and PCB - A5 connector terminals 7 & 8 — NO → Replace microswitch
2. Primary temperature sensor faulty. Cold resistance approx. 11K ohms (resistance reduces with increase in temp.) — YES → Replace sensor
3. Fan connections correct at fan. PCB - A2 connector, is 230V across terminals 5 & 7 — YES → Fan jammed or faulty winding — YES → Replace fan
   - NO → Replace PCB

### E

Check and correct if necessary
1. Electrical and pressure tube connections
2. Blockage of pressure tubes
3. Restriction in flue
4. Venturi

NO → Replace air pressure switch

### F

Gas at burner — NO → Ensure gas is on and purged

PCB - A1 connector has 230V AC across terminals 2 & 4 — YES → Replace gas valve

NO → neon flashing — YES → Turn selector switch to reset position R

NO → Replace PCB

## G

1. Check the burner setting pressure of the gas valve (see Section 9.2 of Commissioning)

2. Voltage at modulating coil of gas valve is:
Max. burner press.approx 9V DC (13V DC LPG)
Min. burner press.approx 1V DC

Current at modulating coil of gas valve is:
(Use an instrument with average function for this measure)
30 ÷ 230 mA DC (45 ÷ 310 mA DC LPG)

YES → Replace gas valve

NO → Replace PCB

## H

Check and correct if necessary
1. Ignition electrode and lead
2. Electrode connection
3. Spark gap and position

YES → 230V at PCB - A1 connector across terminals 3 & 5. Check wiring

NO → Replace PCB

YES → Replace igniter

## I

Ensure that mains input terminal L is Live (230V) and N is Neutral (0V)

YES ↓

Check and correct if necessary
1. Flame sensing electrode and lead connections
2. Electrode position

Flame current should be 1 µA approx.

YES → Replace PCB

NO → Replace flame sensing electrode

## J

Overheat thermostat operated or faulty, i.e. continuity across thermostat terminals

NO → Allow to cool. Continuity across thermostat terminals more than 1.5 ohm

YES → Replace safety thermostat

YES → Replace PCB

## K

Check terminal 1 of On/Off/Reset selector is in connection with PCB - A4 connector terminal 2
Check electrical continuity across terminals 1 & a of On/Off/Reset selector when turned to position R

NO → Replace On/Off/Reset selector

YES → Replace PCB

# 15.0 Short Parts List

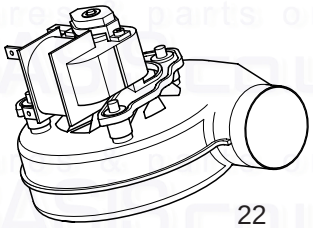
22

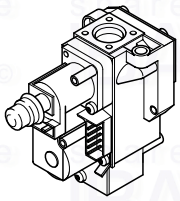
140

44

63

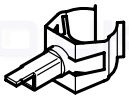
528

131

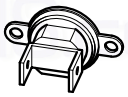
135

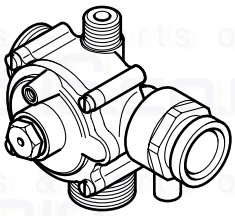
102

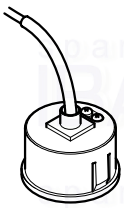
169

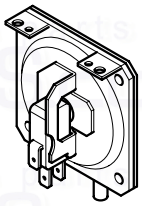
23

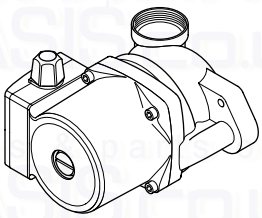
72

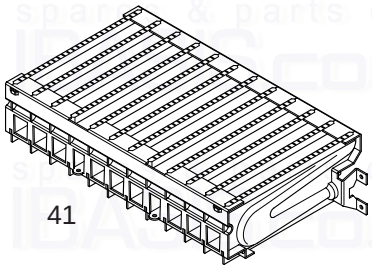
41

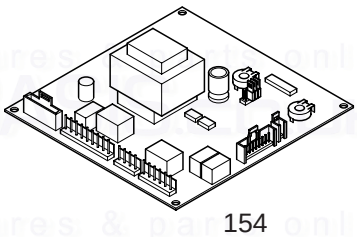
154

59

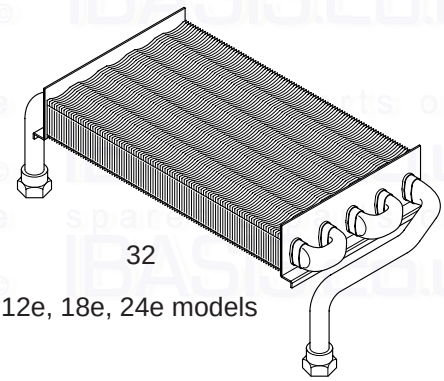
32
12e, 18e, 24e models

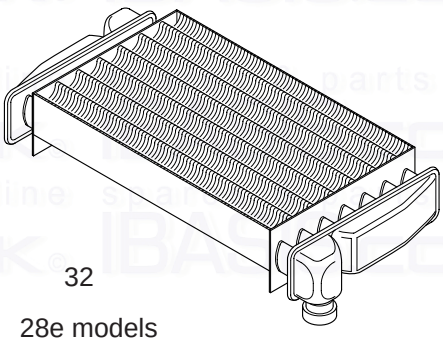
32
28e models

**Short Parts List**

| Key No. | G.C. No. | Description | Manufacturers Part No. |
|---|---|---|---|
| 22 | E66 383 | Fan 12e,18e, 24e | 248001 |
| | E66 527 | Fan 28e | 248002 |
| 23 | 393 374 | Pressure Switch | 247380 |
| 32 | E66 393 | Heat Exchanger 12e,18e, 24e | 248016 |
| | E66 535 | Heat Exchanger 28e | 248017 |
| 41 | E66 398 | Burner 12e,18e, 24e | 248029 |
| | E66 399 | Burner 28e | 248030 |
| 44 | | Injector | 248210 |
| 59 | E66 408 | Electrode Lead | 248037 |
| 63 | E66 411 | Spark or Sensing Electrode | 247384 |
| 72 | E66 431 | Pump 12e,18e, 24e | 248041 |
| | E66 539 | Pump 28e | 248042 |
| 102 | | Hydraulic Outlet Assy | 248490 |
| 131 | 342 571 | Temperature Sensor | 247394 |
| 135 | E66 439 | Safety Thermostat | 248079 |
| 140 | | Gas Valve | |
| 154 | | PCB | 248074 |
| 169 | E66 453 | Pressure Gauge | 248090 |
| 528 | | Return Heating Temperature Sensor | 248497 |

spares & parts online IBASIS.CO.UK

## 16.0 Notes

spares & parts online IBASIS.CO.UK ©

## 16.0 Notes

spares & parts online IBASIS.CO.UK®

POTTERTON

Potterton, Baxi UK Limited, Brownedge Road, Bamber Bridge, Preston, Lancashire. PR5 6SN
After Sales Service 08706 096 096 Technical Enquiries 08706 049 049
www.baxi.com



Comp Nº 5107333 - Iss 1 - 6/02