POTTERTON

Installation & Service Instructions

Promax Combi 24, 28 & 33 HE Plus

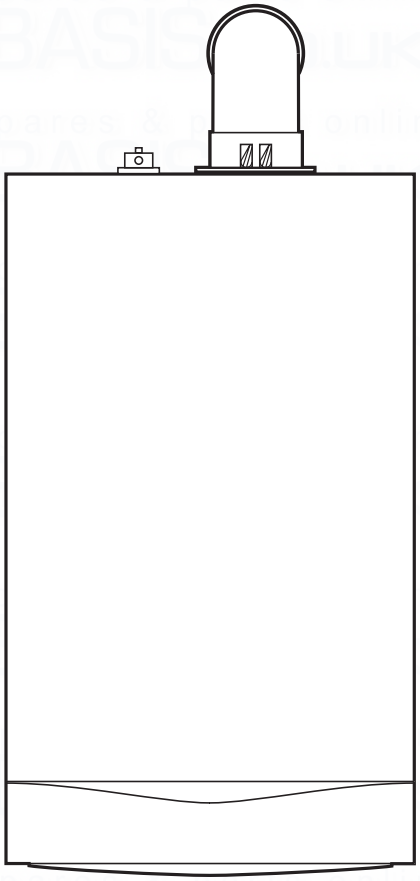

These instructions include the Benchmark Commissioning Checklist and should be left with the user for safe keeping.

© Baxi Heating UK Ltd 2007

Natural Gas

Potterton Promax Combi 24 HE Plus
G.C.N° 47 393 17
Potterton Promax Combi 28 HE Plus
G.C.N° 47 590 04
Potterton Promax Combi 33 HE Plus
G.C.N° 47 590 03

Building Regulations and the Benchmark Commissioning Checklist

Building Regulations (England & Wales) require notification of the installation of a heating appliance to the relevant Local Authority Building Control Department. From 1 April 2005 this can be achieved via a Competent Persons Self Certification Scheme as an option to notifying the Local Authority directly. Similar arrangements will follow for Scotland and will apply in Northern Ireland from 1 January 2006.

CORGI operate a Self Certification Scheme for gas heating appliances.

These arrangements represent a change from the situation whereby compliance with Building Regulations was accepted as being demonstrated by completion of the Benchmark Logbook (which was then left on site with the customer).

With the introduction of Self Certification Schemes, the Benchmark Logbook is being withdrawn. However, a similar document in the form of a commissioning checklist and service interval record is incorporated at the back of these instructions.

This company is a member of the Benchmark initiative and fully supports the aims of the programme. Its aim is to improve the standards of installation and commissioning of central heating systems in the UK and to encourage the regular servicing of all central heating systems to ensure safety and efficiency.

Building Regulations require that installations should comply with manufacturer's instructions. It is therefore important that the commissioning checklist is completed by the installer. The relevant section of Building Regulations only relates to dwellings. Therefore the checklist only applies if the appliance is being installed in a dwelling or some related structure.

The flowchart opposite gives guidance for installers on the process necessary to ensure compliance with Building Regulations.

© Baxi Heating UK Ltd 2007 All rights reserved. No part of this publication may be reproduced or transmitted in any form or by any means, or stored in any retrieval system of any nature (including in any database), in each case whether electronic, mechanical, recording or otherwise, without the prior written permission of the copyright owner, except for permitted fair dealing under Copyrights, Designs and Patents Act 1988.

Applications for the copyright owner's permission to reproduce or make other use of any part of this publication should be made, giving details of the proposed use, to the following address:

The Company Secretary, Baxi Heating UK Ltd, Pentagon House, Sir Frank Whittle Road, Derby, DE21 4XA.

Full acknowledgement of author and source must be given.

WARNING: Any person who does any unauthorised act in relation to a copyright work may be liable to criminal prosecution and civil claims for damages.

This product has an energy rating (A) on a scale of A to G.
For more information see www.boilers.org.uk. This is a certification mark.

"Potterton" supports benchmark

The code of practice for the installation, commissioning & servicing of central heating systems.

Baxi Heating UK Ltd is a BS-EN ISO 9001 Accredited Company

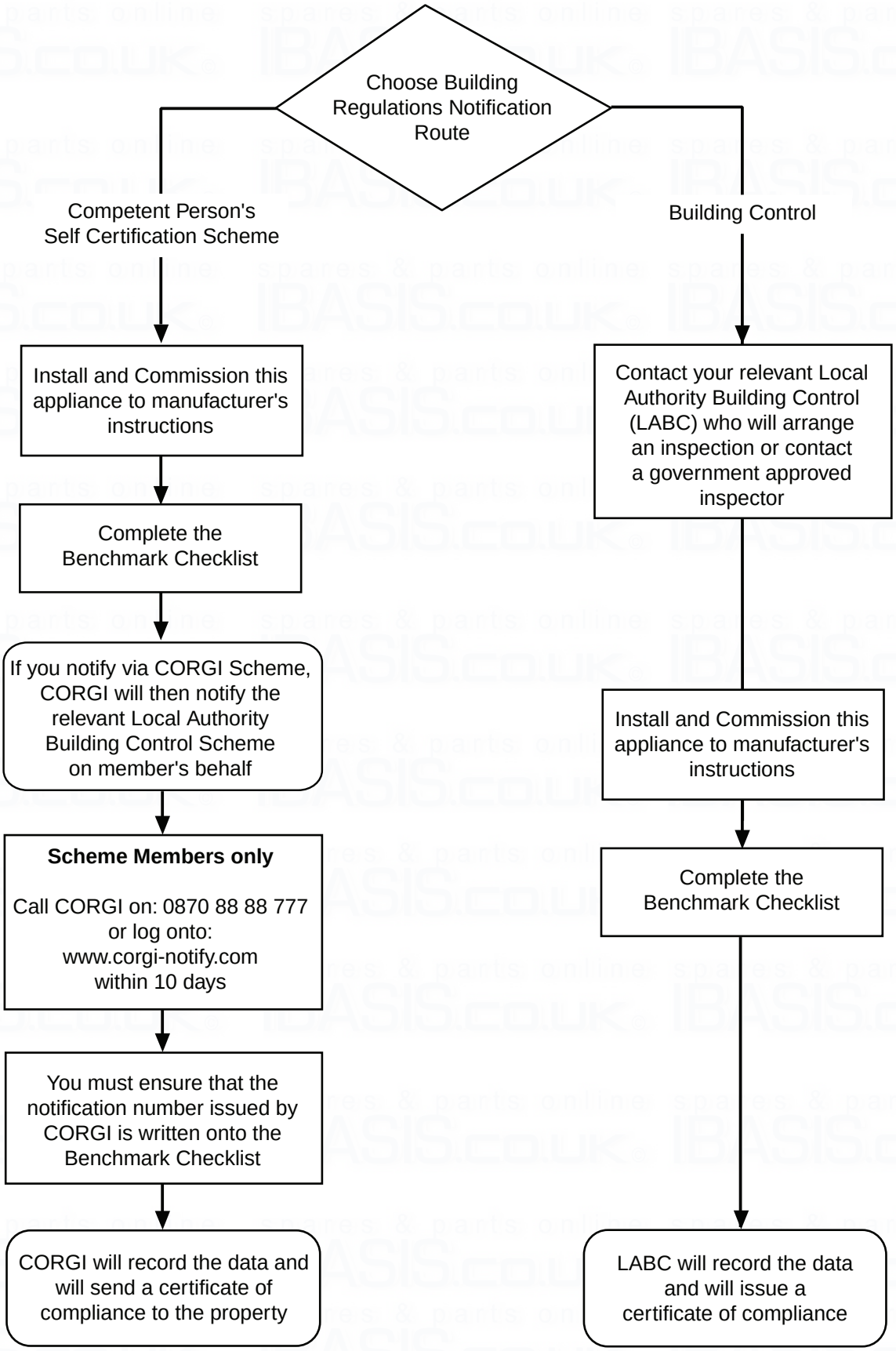

© Baxi Heating UK Ltd 2007

IMPORTANT - Installation, Commissioning, Service & Repair

This appliance must be installed in accordance with the manufacturer's instructions and the regulations in force. Read the instructions fully before installing or using the appliance.

In GB, this must be carried out by a competent person as stated in the Gas Safety (Installation & Use) Regulations.

Definition of competence: A person who works for a CORGI registered company and holding current certificates in the relevant ACS modules, is deemed competent.

In IE, this must be carried out by a competent person as stated in I.S. 813 "Domestic Gas Installations".

The addition of anything that may interfere with the normal operation of the appliance without express written permission from the manufacturer or his agent could invalidate the appliance warranty. In GB this could also infringe the Gas Safety (Installation and Use) Regulations.

Warning - Check the information on the data plate is compatible with local supply conditions.

All CORGI registered installers carry a CORGI identification card and have a registration number. You can check your installer is registered by telephoning 0870 4012300 or writing to:-

1 Elmwood,
Chineham Business Park,
Crockford Lane,
Basingstoke. RG24 8WG

or check online at www.corgi-gas-safety.com

The boiler meets the requirements of Statutory Instrument " The Boiler (Efficiency) Regulations 1993 N° 3083" and is deemed to meet the requirements of Directive 92/42/EEC on the energy efficiency requirements for new hot water boilers fired with liquid or gaseous fuels:-

Type test for purpose of Regulation 5 certified by:
Notified Body 0085.

Product/Production certified by:
Notified Bodies 0085 & 0086.

For GB/IE only.

Legislation

This company declare that no substances harmful to health are contained in the appliance or used during appliance manufacture.

The appliance is suitable only for installation in GB and IE and should be installed in accordance with the rules in force, and only used in a suitably ventilated location.

In GB, the installation must be carried out by a CORGI Registered Installer. It must be carried out in accordance with the relevant requirements of the:

- Gas Safety (Installation & Use) Regulations.
- The appropriate Building Regulations either The Building Regulations, The Building Regulations (Scotland), Building Regulations (Northern Ireland).
- The Water Fittings Regulations or Water Byelaws in Scotland.
- The Current I.E.E. Wiring Regulations.

Where no specific instructions are given, reference should be made to the relevant British Standard Code of Practice.

In IE, the installation must be carried out by a competent Person and installed in accordance with the current edition of I.S. 813 'Domestic Gas Installations', the current Building Regulations and reference should be made to the current ETCI rules for electrical installation.

All systems must be thoroughly flushed and treated with inhibitor (see section 6.2).

Codes of Practice - refer to the most recent version

In GB the following Codes of Practice apply:

Standard	Scope
BS 6891	Gas Installation.
BS 5546	Installation of hot water supplies for domestic purposes.
BS 5449	Forced circulation hot water systems.
BS 6798	Installation of gas fired hot water boilers.
BS 5440 Part 1	Flues.
BS 5440 Part 2	Ventilation.
BS 7074	Expansion vessels and ancillary equipment for sealed water systems.
BS 7593	Treatment of water in domestic hot water central heating systems.

In IE the following Codes of Practice apply:

Standard	Scope
I.S. 813	Domestic Gas Installations.
The following standards give valuable additional information;	
BS 5546	Installation of hot water supplies for domestic purposes.
BS 5449	Forced circulation hot water systems.
BS 7074	Expansion vessels and ancillary equipment for sealed water systems.
BS 7593	Treatment of water in domestic hot water central heating systems.

© Baxi Heating UK Ltd 2007

General

The following advice should be adhered to, from when first handling the boiler to the final stages of installation, and also during maintenance.

Most injuries as a result of inappropriate handling and lifting are to the back, but all other parts of the body are vulnerable, particularly shoulders, arms and hands. Health & Safety is the responsibility of EVERYONE.

There is no 'safe' limit for one man - each person has different capabilities. The boiler should be handled and lifted by TWO PEOPLE.

Do not handle or lift unless you feel physically able.

Wear appropriate Personal Protection Equipment e.g. protective gloves, safety footwear etc.

Preparation

Co-ordinate movements - know where, and when, you are both going.

Minimise the number of times needed to move the boiler - plan ahead.

Always ensure when handling or lifting the route is clear and unobstructed. If possible avoid steps, wet or slippery surfaces, unlit areas etc. and take special care on ladders/into lofts.

Technique

When handling or lifting always use safe techniques - keep your back straight, bend your knees. Don't twist - move your feet, avoid bending forwards and sideways and keep the load as close to your body as possible.

Where possible transport the boiler using a sack truck or other suitable trolley.

Always grip the boiler firmly, and before lifting feel where the weight is concentrated to establish the centre of gravity, repositioning yourself as necessary. See the 'Installation' section of these instructions for recommended lift points.

Remember

The circumstances of each installation are different. Always asses the risks associated with handling and lifting according to the individual conditions.

If at any time when installing the boiler you feel that you may have injured yourself STOP !!
DO NOT 'work through' the pain - you may cause further injury.

IF IN ANY DOUBT DO NOT HANDLE OR LIFT THE BOILER - OBTAIN ADVICE OR ASSISTANCE BEFORE PROCEEDING !!

© Baxi Heating UK Ltd 2007

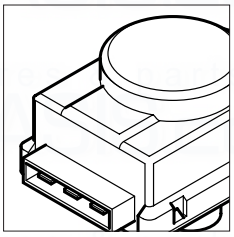

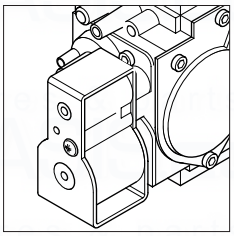

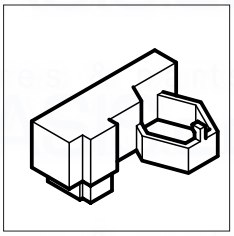

CONTENTS

Section		Page
1.0	Introduction	7
2.0	General Layout	8
3.0	Appliance Operation	9
4.0	Technical Data	10
5.0	Dimensions and Fixings	11
6.0	System Details	12
7.0	Site Requirements	15
8.0	Flue Options	19
9.0	Plume Displacement	24
10.0	Installation	28
11.0	Commissioning	33
12.0	Completion	35
13.0	Servicing	36
14.0	Changing Components	38
15.0	Combustion Check	47
16.0	Electrical	48
17.0	Short Parts List	49
18.0	Fault Finding	50
19.0	Pages for Notes	56
	Benchmark Checklist	58

 © Baxi Heating UK Ltd 2007

1.0 Introduction

1.1 Description

1. The Potterton Promax Combi is a fully automatic gas fired wall mounted condensing combination boiler. It is room sealed and fan assisted, and will serve central heating and mains fed domestic hot water.

2. The boiler is set to give a maximum output of :-

24 models -	24 kW DHW
	21 kW CH (Condensing)
28 models -	28 kW DHW
	25.9 kW CH (Condensing)
33 models -	33 kW DHW
	30.3 kW CH (Condensing)

3. It is designed for use on Natural Gas (G20).

4. The boiler is suitable for use only on fully pumped sealed heating systems. Priority is given to domestic hot water.

5. The boiler data badge gives details of the model, serial number and Gas Council number and is situated on the inner door panel or the control box. It is visible when the case front panel is removed (Fig. 1).

6. The boiler model name and serial number are also shown on the information label on the back of the facia door. This is for user reference.

7. The boiler is intended to be installed in residential / commercial / light industrial E.M.C. environments on a governed meter supply only.

8. The boiler must be installed with one of the purpose designed flues such as the standard horizontal flue kit, part no. 5118489.

9. **All systems must be thoroughly flushed and treated with inhibitor (see section 6.2).**

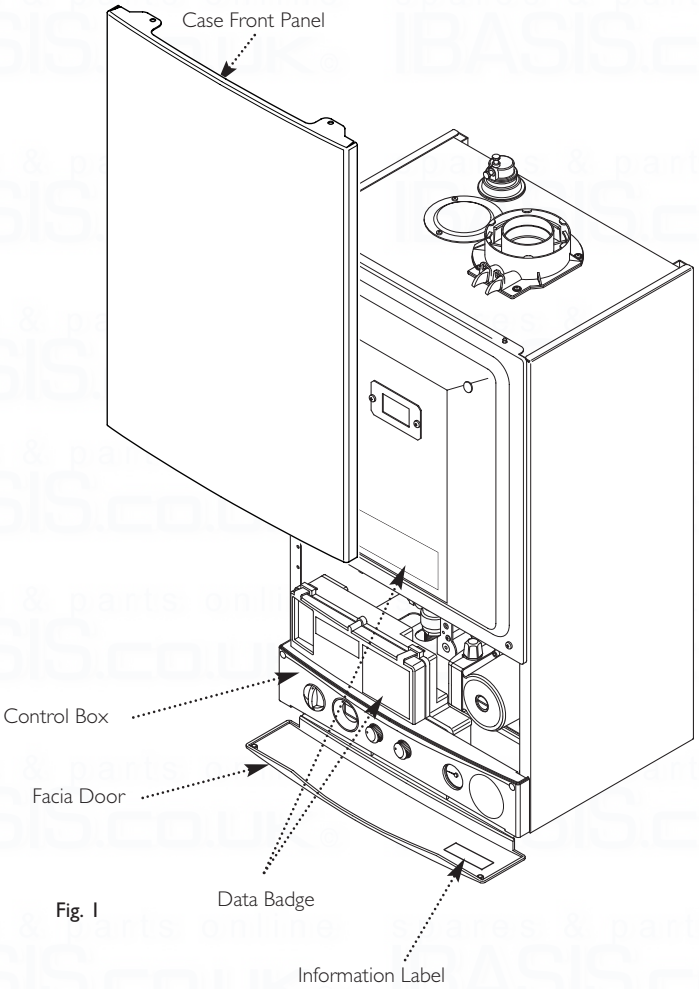

Fig. 1

1.2 Contents of Pack

1. Boiler Unit
2. Wall Plate (inc. taps)
3. Set of Pipe (inc. nuts)
4. Template
5. Quick Fit Guide
6. Literature Pack

© Baxi Heating UK Ltd 2007

2.0 General Layout

2.1 Layout

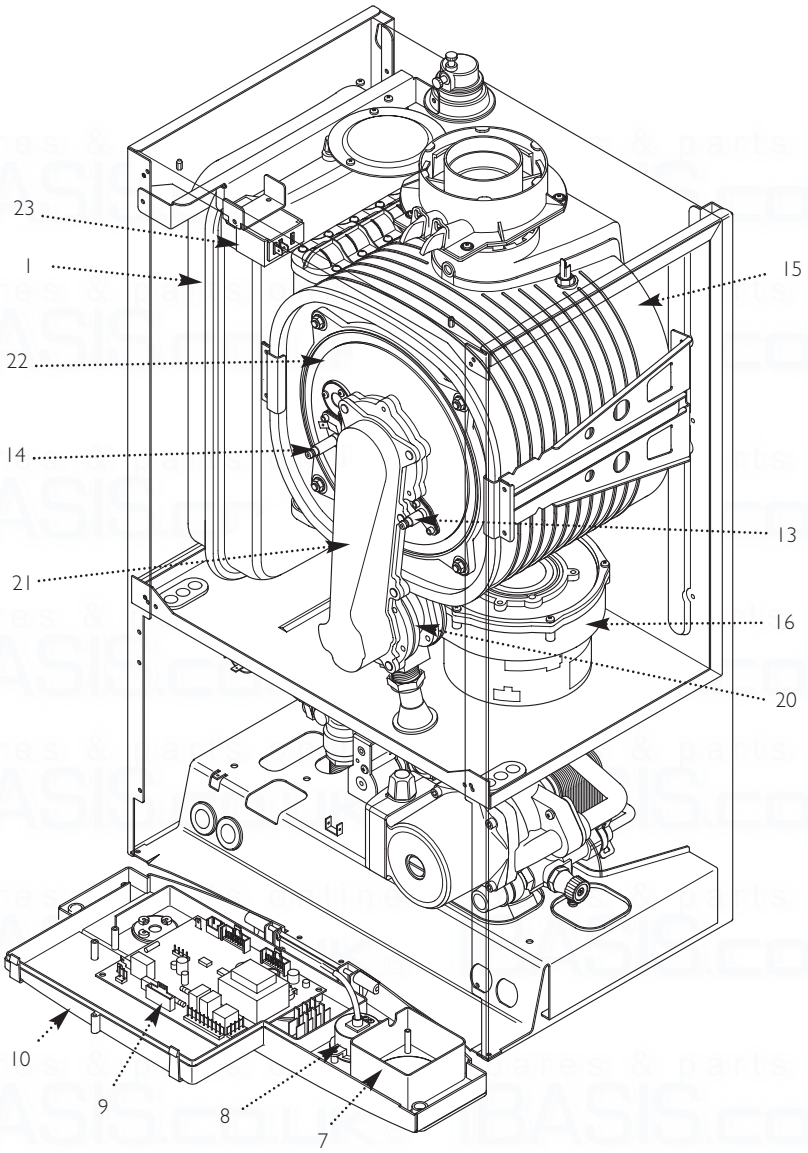

1. Expansion Vessel
2. Automatic Air Vent
3. DHW Plate Heat Exchanger
4. Circulation Pump
5. Drain Off Point
6. Pressure Relief Valve
7. Optional Integral Timer Position
8. Central Heating System Pressure Gauge
9. PCB
10. Control Box
11. 3-Way Valve Assembly
12. Condensate Trap
13. Flame Sensing Electrode
14. Spark Electrode
15. Primary Heat Exchanger
16. Fan Assembly
17. On/Off/Reset Selector Switch
18. Central Heating Temperature Control
19. Hot Water Temperature Control
20. Venturi
21. Air/Gas Collector
22. Combustion Box Cover & Burner
23. Igniter
24. Burner On Light
25. Central Heating Mode Light
26. Domestic Hot Water Mode Light
27. Display

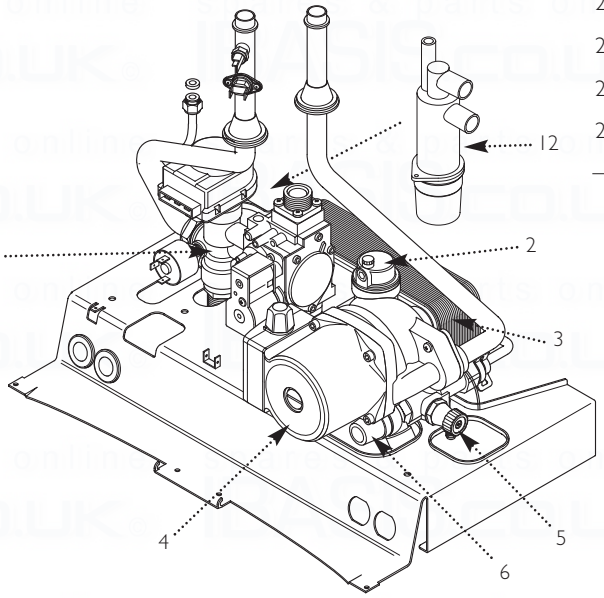

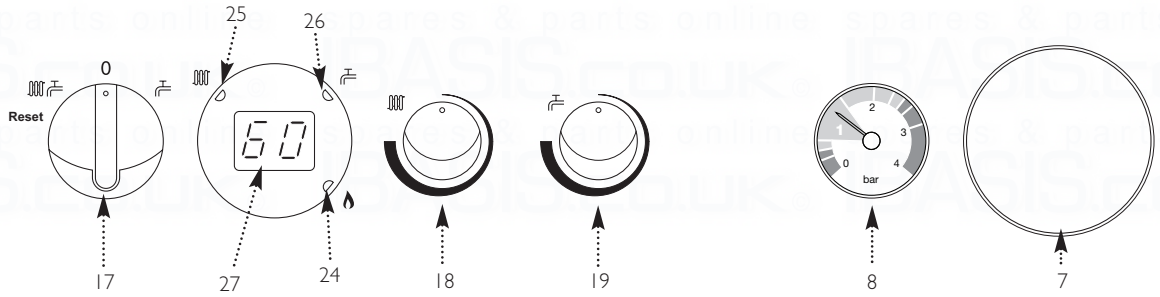

© Baxi Heating UK Ltd 2007

Central Heating Circuit

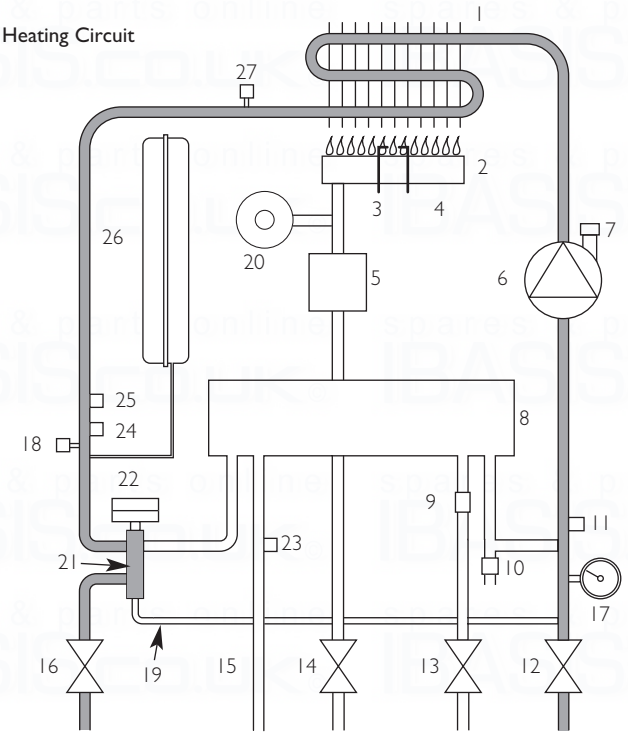

Fig. 2

Key

1 Primary Heat Exchanger
2 Burner
3 Ignition Electrodes
4 Flame Sensing Electrode
5 Gas Valve
6 Pump
7 Automatic Air Vent
8 Plate Heat Exchanger
9 Flow Sensor with Filter & Regulator
10 Pressure Relief Valve
11 Boiler Drain Point
12 Heating Return
13 Cold Water Inlet On/Off Valve and Filter
14 Gas Inlet
15 Domestic Hot Water Outlet
16 Heating Flow
17 Pressure Gauge
18 Water Pressure Sensor
19 Automatic By-Pass
20 Fan
21 Diverter Valve Assembly
22 Diverter Valve Motor
23 Domestic Hot Water Flow Temperature Sensor
24 Safety Thermostat
25 Central Heating Temperature Sensor
26 Expansion Vessel
27 Heat Exchanger Air Vent

Domestic Hot Water Circuit

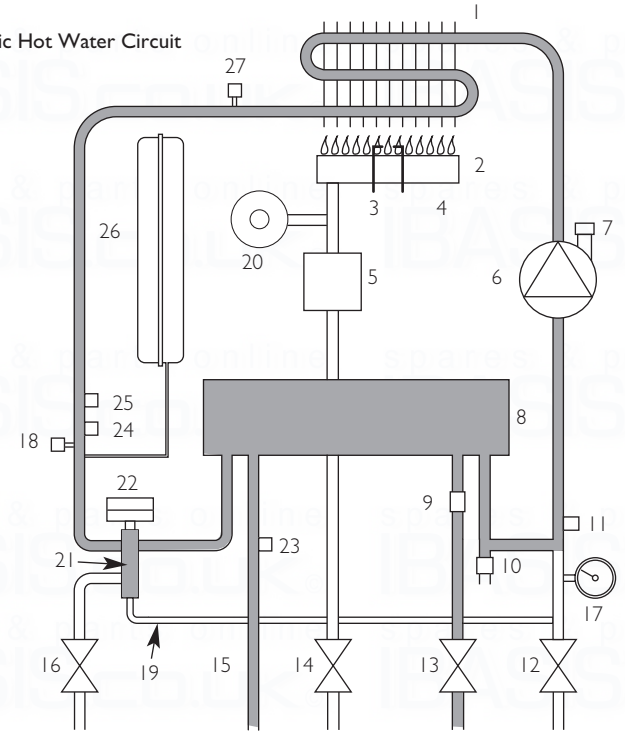

Fig. 3

3.1 Central Heating Mode (Fig. 2)

1. With a demand for heating, the pump circulates water through the primary circuit.

2. Once main burner ignites the fan speed controls the gas rate to maintain the heating temperature measured by the temperature sensor.

3. When the flow temperature exceeds the setting temperature, a 3 minute delay occurs before the burner relights automatically (anti-cycling). The pump continues to run during this period.

4. When the demand is satisfied the burner is extinguished and the pump continues to run for a period of 3 minutes (Pump Overrun).

3.2 Domestic Hot Water Mode (Fig. 3)

1. Priority is given to the domestic hot water supply. A demand at a tap or shower will override any central heating requirement.

2. The flow of water will operate the Hall Effect Sensor which requests the 3 way valve to change position. This will allow the pump to circulate the primary water through the DHW plate heat exchanger.

3. The burner will light automatically and the temperature of the domestic hot water is controlled by the temperature sensor.

4. When the domestic hot water demand ceases the burner will extinguish and the diverter valve will remain in the domestic hot water mode, unless there is a demand for central heating.

IMPORTANT: When the selector switch is in the '0' (Off) position the electrical supply to the boiler is isolated. The boiler will not operate and the integral timer will require resetting once the selector switch is set to either Position (i) or Position (ii).

3.3 Frost Protection Mode

1. The frost protection mode is integral to the appliance and functions only with the selector switch (see Section 2.1) in the domestic hot water and central heating position. If the system temperature falls below 5° C then the boiler will fire on its minimum setting until a flow temperature of 30° C is reached. Further protection can be incorporated by using a system frost thermostat.

3.4 Pump Protection

1. With the selector switch (see Section 2.1) in either the central heating or central heating and domestic hot water position, the pump will automatically operate for 1 minute in every 24 hours to prevent sticking.

© Baxi Heating UK Ltd 2007

4.1 Promax Combi 24, 28 & 33

Appliance Type		C_{13}	C_{33}	C_{53}
Appliance Category		CAT I $_{2H}$		
Heat Input CH (Net)		Max	Min	
24 model	kW	20.5	7	
28 model	kW	24.7	9	
33 model	kW	28.9	9.7	
Heat Input CH (Gross)		Max	Min	
24 model	kW	22.7	7.8	
28 model	kW	27.4	10	
33 model	kW	32.1	10.8	
Heat Output CH (Non-Condensing)		Max	Min	
24 model	kW	20	6.8	
28 model	kW	24	8.7	
33 model	kW	28	9.4	
Heat Output CH (Condensing)		Max	Min	
24 model	kW	21	7.4	
28 model	kW	25.9	9.5	
33 model	kW	30.3	10.2	
Heat Input DHW (Net)		Max		
24 model	kW	24.7		
28 model	kW	28.9		
33 model	kW	34		
Heat Input DHW (Gross)		Max		
24 model	kW	27.4		
28 model	kW	32.1		
33 model	kW	37.7		
Heat Output DHW		Max		
24 model	kW	24		
28 model	kW	28		
33 model	kW	33		
Max Gas Rate	(Natural Gas - G20) (After 10 mins)			
24 model	m^3/h	2.6		
28 model	m^3/h	3.1		
33 model	m^3/h	3.6		

Inlet Pressure (Natural Gas - G20)
mbar 20

Injector (Natural Gas - G20)
7.5mm (24&28 model) 12mm(33 model)

Electrical Supply 230V~ 50H_z
(Appliance must be connected to an earthed supply)

Power Consumption
155W (24&28 model) 160W(33 model)

Electrical Protection
IPX5D

External Fuse Rating 3A

Internal Fuse Rating F2L

Condensate Drain
To accept 21.5mm (3/4 in) plastic waste pipe

Flue Terminal Dimensions		
	Diameter	100mm
	Projection	125mm

Connections		copper tails
Gas Supply	-	22mm
Central Heating Flow	-	22mm
Central Heating Return	-	22mm
Cold Water Mains Inlet	-	15mm
DHW Flow	-	15mm
Pressure Relief Discharge	-	15mm

Outercase Dimensions	
Casing Height	- 780mm
Overall Height Inc Flue Elbow	- 965mm
Casing Width	- 450mm
Casing Depth	- 345mm

Clearances	
Above Casing	200 mm Min
Below Casing	200 mm Min
Front	450 mm Min (For Servicing)
Front	5 mm Min (In Operation)
L.H. Side	5 mm Min
R.H. Side	5 mm Min (In Operation)

Weights (kg)	(24)	(28)	(33)
Packaged Boiler Carton	54.5	55.5	56.5
Installation Lift Weight	44	45	46

NO_x Class 5

Central Heating Primary Circuit Pressures

	bar
Safety Discharge	3
Max Operating	2.5
Min Operating	0.5
Recommended Operating Range	1-2

DHW Circuit Pressures	bar
Max Operating	8
Min Operating	0.15

Flow Rates	(24) l/min	(28) l/min	(33) l/min
DHW Flow Rate @ 30°C Rise	11.43	13.3	15.7
DHW Flow Rate @ 35°C Rise	9.8	11.5	13.5
Min Working DHW Flow Rate	2	2	2

Pump
Available Head See graph below

Expansion Vessel - (For Central Heating only. Integral with appliance)

	bar
Min Pre-charge Pressure	0.5

	(24,28)	(33)
Max Capacity of CH System	litre 125	litre 155
Primary Water Content of Boiler (unpressurised)	2.5	2.8

Temperatures
C.H. Flow Temp (adjustable)
25°C to 80°C max (± 5°C)

D.H.W. Flow Temp (adjustable)
35°C to 60°C max (± 5°C)
dependent upon flow rate

SEDBUK Declaration

The efficiency is 90.5% (24)
90.1% (28 & 33)

This value is used in the UK Government's Standard Assessment Procedure (SAP) for energy rating of dwellings. The test data from which it has been calculated has been certified by 0087.

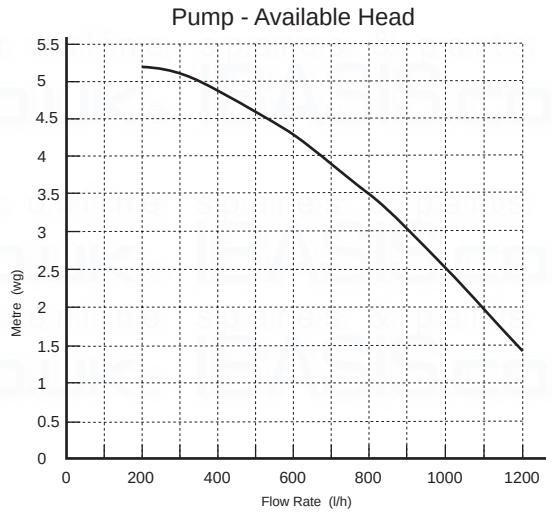

 © Baxi Heating UK Ltd 2007

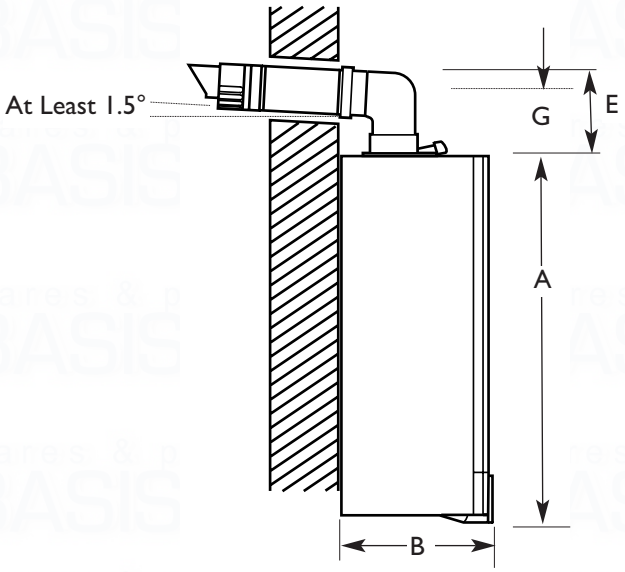

Dimensions	
A	780mm
B	345mm
C	450mm
D	116mm Ø Min.
E	185mm (207mm for 80/125mm flue systems)
F	145mm
G	131mm
H	180mm

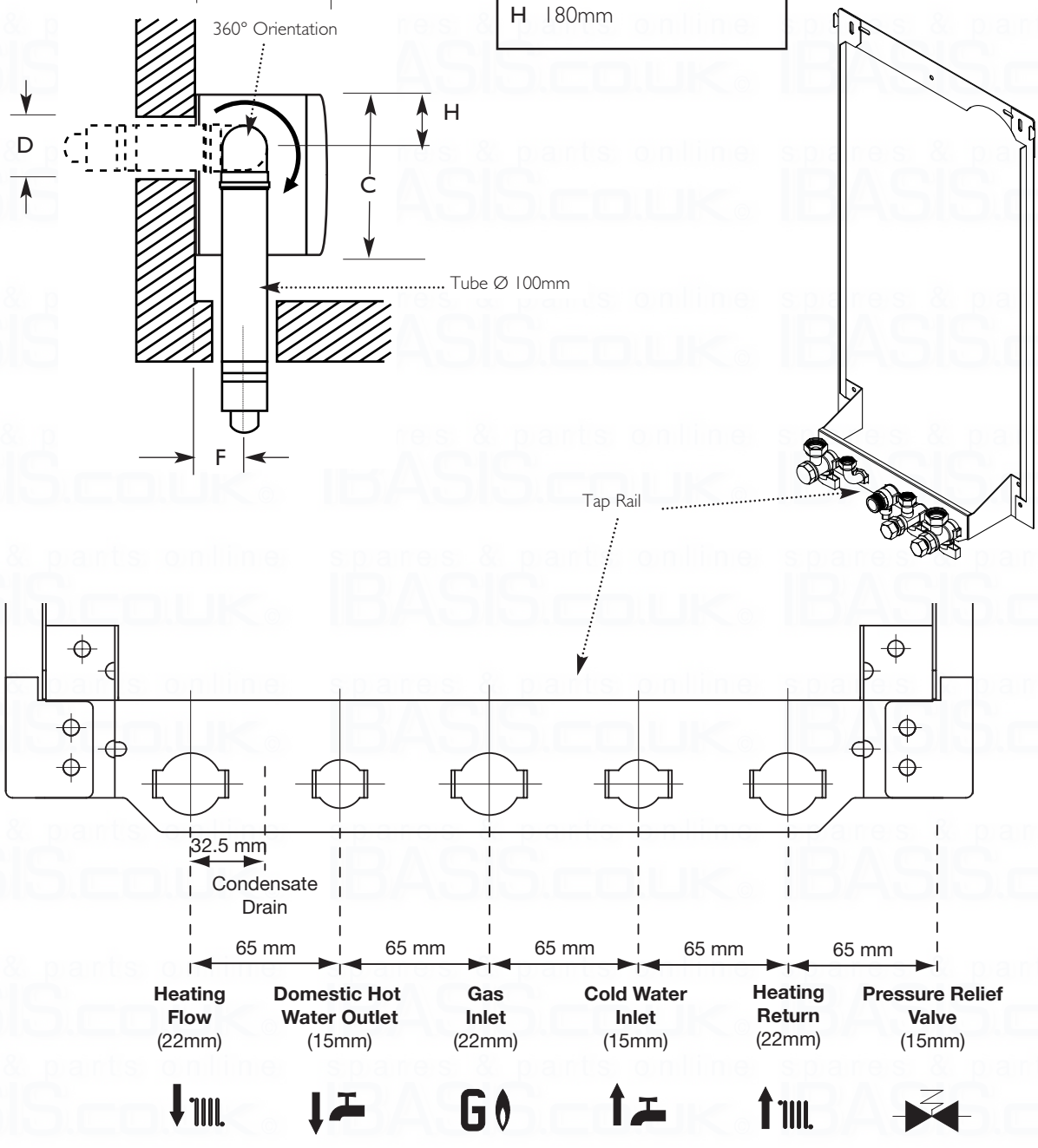

© Baxi Heating UK Ltd 2007

6.0 System Details

6.1 Information

1. The Promax Combi Condensing Combination Boiler is a 'Water Byelaws Scheme - Approved Product'.
To comply with the Water Byelaws your attention is drawn to the following installation requirements and notes (IRN).

a) IRN 001 - See text of entry for installation requirements and notes.

b) IRN 302 - Byelaw 14.

2. Reference to the WRc publications, 'Water fittings and materials directory' and 'Water supply byelaws guide' give full details of byelaws and the IRNs.

6.2 Central Heating Circuit

1. The appliance is suitable for fully pumped SEALED SYSTEMS ONLY.

Treatment of Water Circulating Systems

- All recirculatory water systems will be subject to corrosion unless an appropriate water treatment is applied. This means that the efficiency of the system will deteriorate as corrosion sludge accumulates within the system, risking damage to pump and valves, boiler noise and circulation problems.

- When fitting new systems flux will be evident within the system, which can lead to damage of system components.

- All systems must be thoroughly drained and flushed out. Using, for example Betz-Dearborn Sentinel X300 or X400 or Fernox Superfloc Universal Cleanser. They should be used following the flushing agent manufacturer's instructions.

- System additives - corrosion inhibitors and flushing agents/descalers should comply to BS7593 requirements, e.g. Betz-Dearborn Sentinel X100 and Fernox-Copal which should be used following the inhibitor manufacturer's instructions.

Failure to flush and add inhibitor to the system will invalidate the appliance warranty.

- It is important to check the inhibitor concentration after installation, system modification and at every service in accordance with the manufacturer's instructions. (Test kits are available from inhibitor stockists.)

- For information or advice regarding any of the above contact Technical Enquiries.

6.3 Bypass

1. The boiler is fitted with an automatic integral bypass.

6.4 System Control

1. The boiler is designed for use in a heating system that incorporates external controls, i.e. a minimum of a timer device.

2. Suitable timer kits are available as optional extras.

3. For optimum operating conditions and maximum economy the fitting of a programmable room thermostat is recommended.

 © Baxi Heating UK Ltd 2007

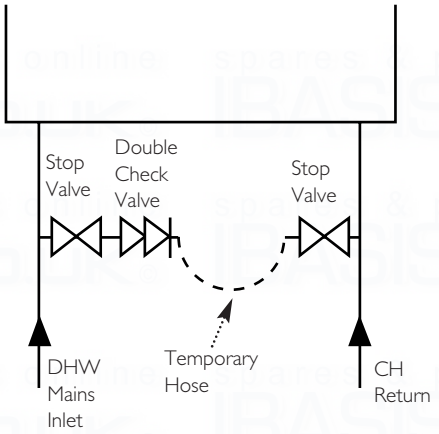

Fig. 4

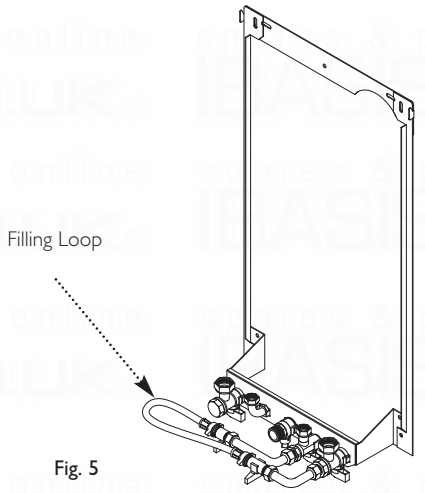

Fig. 5

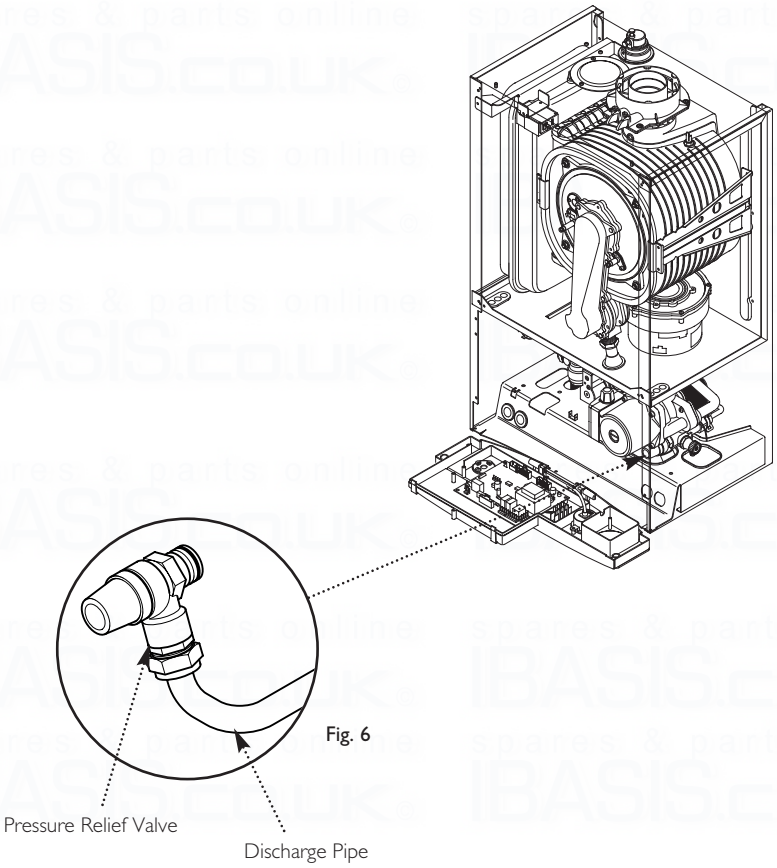

Fig. 6

6.5 System Filling and Pressurising (Fig. 4)

1. A filling point connection on the central heating return pipework must be provided to facilitate initial filling and pressurising and also any subsequent water loss replacement/refilling.

2. There are connection points on the mains cold water inlet and central heating return isolating taps (Fig. 5) to which the optional filling loop kit (Part No. 248221) can be assembled.

3. The filling method adopted must be in accordance with all relevant water supply regulations and use approved equipment.

4. Your attention is drawn to:
for GB: Guidance G24.2 and recommendation R24.2 of the Water Regulations Guide.
for IE: the current edition of I.S. 813 "Domestic Gas Installations".

5. The sealed primary circuits may be filled or replenished by means of a temporary connection between the circuit and a supply pipe, provided a 'Listed' double check valve or some other no less effective backflow prevention device is permanently connected at the inlet to the circuit and the temporary connection is removed after use.

6.6 Expansion Vessel (Central Heating only)

1. The appliance expansion vessel is pre-charged to 0.5 bar. Therefore, the minimum cold fill pressure is 0.5 bar. The vessel is suitable for correct operation for system capacities up to 125 litres (24, 28 models) 155 litres (33 models). For greater system capacities an additional expansion vessel must be fitted. For GB refer to BS 7074 Pt 1. For IE, the current edition of I.S. 813 "Domestic Gas Installations".

6.7 Pressure Relief Valve (Fig. 6)

1. The pressure relief valve is set at 3 bar, therefore all pipework, fittings, etc. should be suitable for pressures in excess of 3 bar and temperature in excess of 100°C.

2. The pressure relief discharge pipe should be not less than 15mm dia, run continuously downward, and discharge outside the building, preferably over a drain. It should be routed in such a manner that no hazard occurs to occupants or causes damage to wiring or electrical components. The end of the pipe should terminate facing down and towards the wall.

3. The discharge must not be above a window, entrance or other public access. Consideration must be given to the possibility that boiling water/steam could discharge from the pipe.

© Baxi Heating UK Ltd 2007

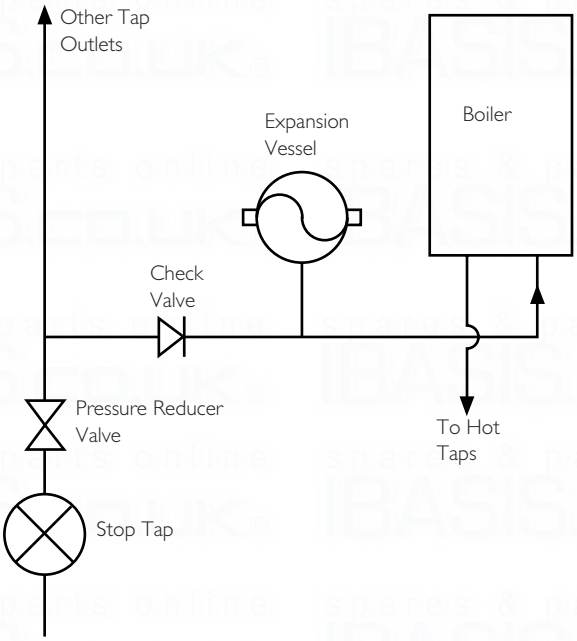

Fig. 7

6.8 Domestic Hot Water Circuit (Fig. 7)

1. All DHW circuits, connections, fittings, etc. should be fully in accordance with relevant standards and water supply regulations.

2. Your attention is drawn to:
for GB: Guidance G17 to G24 and recommendation R17 to R24 of the Water Regulations Guide.
for IE: the current edition of I.S. 813 "Domestic Gas Installations".

3. A single check valve must be fitted as shown in Fig. 7 to prevent backflow to the supply pipe and to ensure the efficient operation of the expansion vessel which is required to accommodate the thermal expansion of the water.

4. When the domestic water system includes any device which prevents water expanding back towards the supply (check valve, loose jumpered stopcock, water meter, water treatment device) then an expansion vessel must be fitted (eg. Zilmet 160ml, R½ 15bar).

5. If the hot water expansion is not provided for, then high pressures can develop which may result in damage to fittings and devices on the system.

6. The boiler's maximum working mains pressure is 8 bar, therefore all pipework, connections, fittings, etc. should be suitable for pressures in excess of 8 bar. A pressure reducing valve must be fitted for pressures in excess of 8 bar. The manufacturer of any outlet fittings, such as a shower valve, may require a lower maximum pressure. The pressure reduction must take account of all fittings connected to the DHW system.

6.9 Showers

1. If a shower control is supplied from the appliance it should be of the thermostatic or pressure balanced type. Thermostatic type shower valves provide the best comfort and guard against water at too high a temperature. Existing controls may not be suitable - refer to the shower valve manufacturer.

6.10 Hard Water Areas

1. If the area of the installation is recognised as a HARD WATER AREA then a suitable device should be fitted to treat the mains water supply to the boiler. Contact your Water Distribution Company for advice on suitable devices.

 © Baxi Heating UK Ltd 2007

7.0 Site Requirements

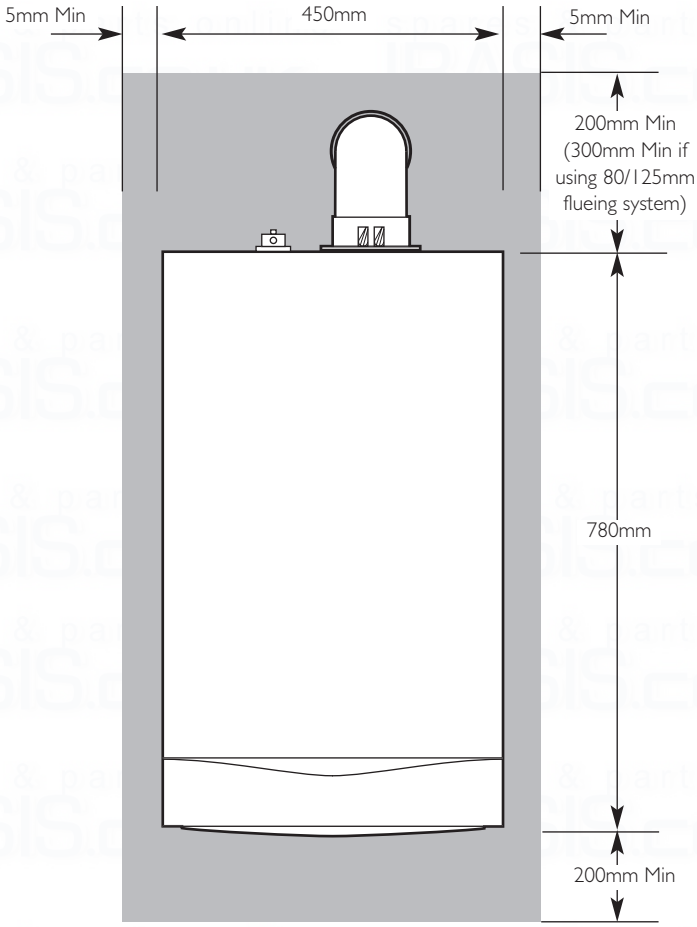

Fig. 8

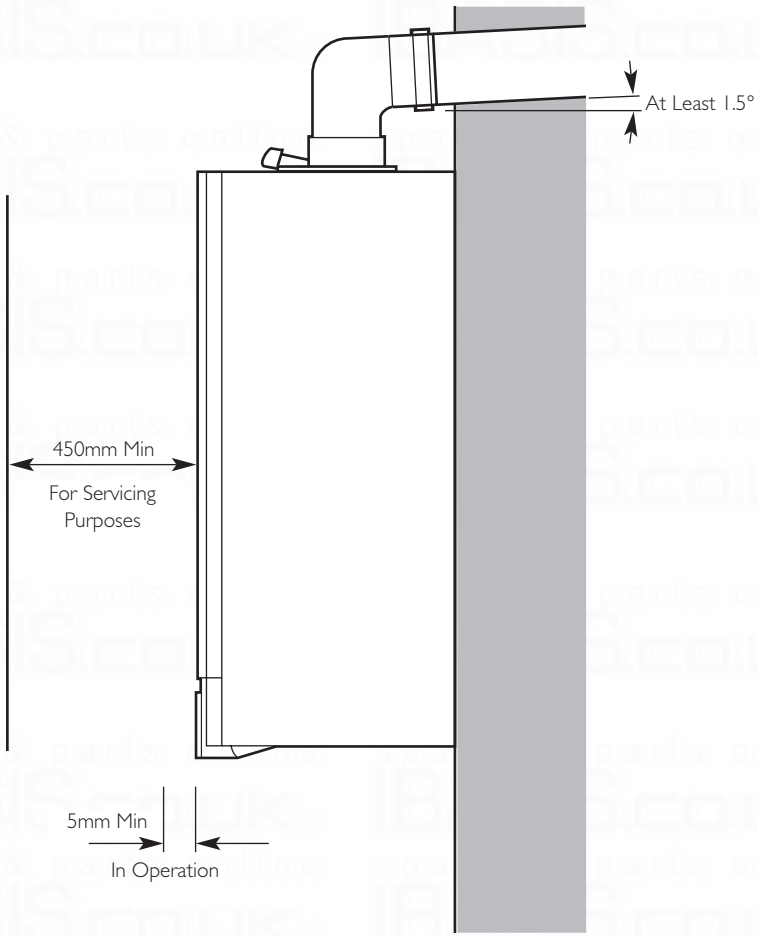

Fig. 9

7.1 Location

1. The boiler may be fitted to any suitable wall with the flue passing through an outside wall or roof and discharging to atmosphere in a position permitting satisfactory removal of combustion products and providing an adequate air supply. The boiler should be fitted within the building unless otherwise protected by a suitable enclosure i.e. garage or outhouse. (The boiler may be fitted inside a cupboard-see Section 7.3).

2. If the boiler is sited in an unheated enclosure then it is recommended to leave the ON/OFF Selector Switch in the domestic hot water and central heating position to give frost protection.

3. If the boiler is fitted in a room containing a bath or shower reference must be made to the relevant requirements.
In GB this is the current I.E.E. Wiring Regulations and Building Regulations.
In IE reference should be made to the current edition of I.S. 813 "Domestic Gas Installations" and the current ETCI rules.

4. If the boiler is to be fitted into a building of timber frame construction then reference must be made to the current edition of Institute of Gas Engineers Publication IGE/UP/7 (Gas Installations in Timber Framed Housing).

7.2 Clearances (Figs. 8 & 9)

1. A flat vertical area is required for the installation of the boiler.

2. These dimensions include the necessary clearances around the boiler for case removal, spanner access and air movement. Additional clearances may be required for the passage of pipes around local obstructions such as joists running parallel to the front face of the boiler.

© Baxi Heating UK Ltd 2007

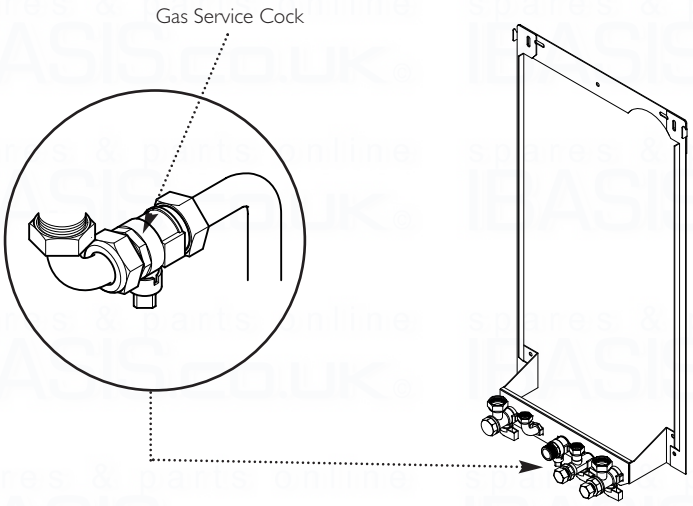

Fig. 10

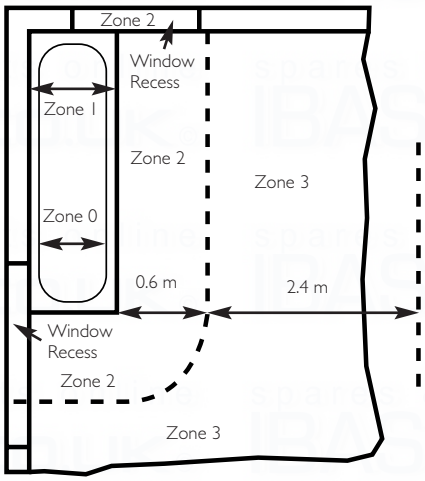

Fig. 11 In GB Only

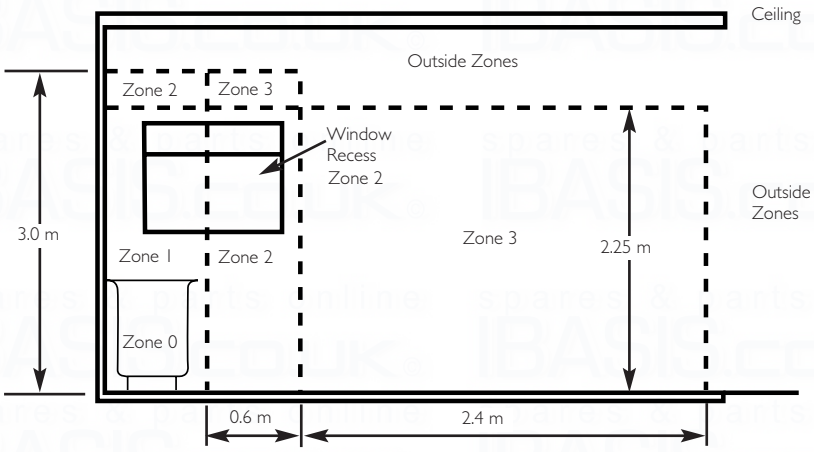

Fig. 12 In GB Only

7.3 Ventilation of Compartments

1. Where the appliance is installed in a cupboard or compartment, no air vents are required.

2. BS 5440: Part 2 refers to room sealed appliances installed in compartments. The appliance will run sufficiently cool without ventilation.

7.4 Gas Supply

1. The gas installation should be in accordance with the relevant standards. In GB this is BS 6891. In IE this is the current edition of I.S. 813 "Domestic Gas Installations".

2. The connection to the appliance is a 22mm copper tail located at the rear of the gas service cock (Fig. 10).

3. Ensure that the pipework from the meter to the appliance is of adequate size. Do not use pipes of a smaller diameter than the boiler gas connection (22mm).

7.5 Electrical Supply

1. External wiring must be correctly earthed, polarised and in accordance with relevant regulations/rules. In GB this is the current I.E.E. Wiring Regulations. In IE reference should be made to the current edition of ETCI rules.

2. The mains supply is 230V ~ 50H_Z fused at 3A.

NOTE: The method of connection to the electricity supply must facilitate complete electrical isolation of the appliance.

Connection may be via a fused double-pole isolator with a contact separation of at least 3mm in all poles and servicing the boiler and system controls only.

7.6 Bath & Shower Rooms

1. If the boiler is fitted in a room containing a bath or shower and **NOT FITTED** with any optional integral timer or thermostat, it can be fitted in zone 2, (Figs. 11 & 12 shows zone dimensions for a bathtub. For other examples refer to Section 601 of the Current I.E.E. Wiring Regulations) reference must be made to the relevant requirements.
In GB this is the current I.E.E. Wiring Regulations and Building Regulations.
In IE reference should be made to the current edition of I.S. 813 "Domestic Gas Installations" and the current ETCI rules.

 © Baxi Heating UK Ltd 2007

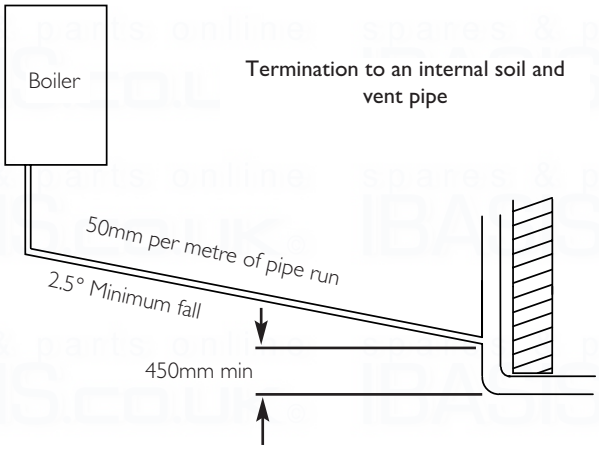

Fig. 13

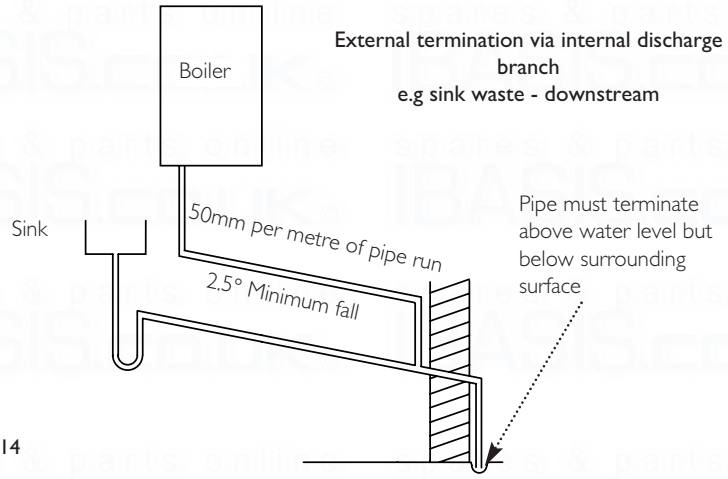

Fig. 14

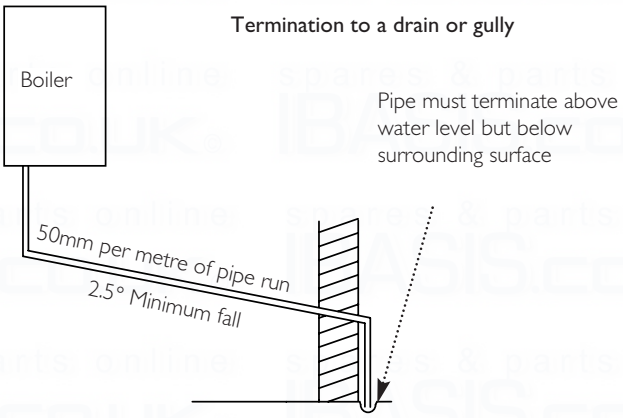

Fig. 15

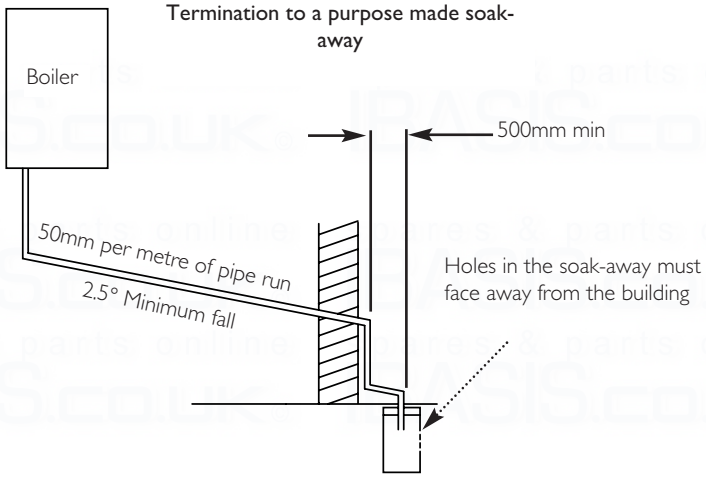

Fig. 16

7.7 Condensate Drain

FAILURE TO INSTALL THE CONDENSATE DISCHARGE PIPEWORK CORRECTLY WILL AFFECT THE RELIABLE OPERATION OF THE BOILER

The condensate discharge pipe MUST NOT RISE at any point along its length. There MUST be a fall of AT LEAST 2.5° (50mm per metre) along the entire run.

1. The condensate outlet will accept 21.5mm (3/4in) plastic overflow pipe which should generally discharge internally into the household drainage system. If this is not possible, discharge into an outside drain is acceptable.

2. Ensure the discharge of condensate complies with any national or local regulations in force.
BS 6798:2000 & Part H1 of the Building Regulations give further guidance.

3. The discharge pipe should be run in a proprietary drain pipe material e.g. PVC, PVC-U, ABS, PVC-C or PP.

4. Metal pipework is NOT suitable for use in condensate discharge systems.

5. The pipe should be a minimum of 21.5mm diameter and must be supported using suitably spaced clips to prevent sagging.

6. **It is advisable to keep the condensate pipe internal.**

7. **External runs greater than 3 metres or runs in cold areas should use 32mm waste pipe.**

8. If the boiler is fitted in an unheated location the entire condensate discharge pipe should be treated as an external run.

9. In all cases discharge pipe must be installed to aid disposal of the condensate. To reduce the risk of condensate being trapped, as few bends and fittings as possible should be used.

10. When discharging condensate into a soil stack or waste pipe the effects of existing plumbing must be considered. If soil pipes or waste pipes are subjected to internal pressure fluctuations when WC's are flushed or sinks emptied then back-pressure may force water out of the boiler trap and cause appliance lockout.

Examples are shown of the following methods of termination:-
i) to an internal soil & vent pipe - Fig. 13
ii) via an internal discharge branch (e.g. sink waste) - Fig. 14
iii) to a drain or gully - Fig. 15
iv) to a purpose made soakaway - Fig. 16

© Baxi Heating UK Ltd 2007

Terminal Position with Minimum Distance (Fig. 18)		(mm)
A[a]	Directly below an opening, air brick, opening windows, etc.	300
B[a]	Above an opening, air brick, opening window etc.	300
C[a]	Horizontally to an opening, air brick, opening window etc.	300
D	Below gutters, soil pipes or drain pipes.	25
E	Below eaves.	25
F	Below balconies or car port roof.	25
G	From a vertical drain pipe or soil pipe.	25
H	From an internal or external corner.	25
I	Above ground, roof or balcony level.	300
J	From a surface or boundary line facing a terminal.	600
K	From a terminal facing a terminal (Horizontal flue).	1200
	From a terminal facing a terminal (Vertical flue).	600
L	From an opening in carport (e.g. door, window) into the dwelling.	1200
M	Vertically from a terminal on the same wall.	1500
N	Horizontally from a terminal on the same wall.	300
R	From adjacent wall to flue (vertical only).	300
S	From an adjacent opening window (vertical only).	1000
T	Adjacent to windows or openings on pitched and flat roofs	600
U	Below windows or openings on pitched roofs	2000

[a] In addition, the terminal should be no nearer than 150 mm to an opening in the building fabric formed for the purpose of accommodating a built-in element such as a window frame. See BS 5440 Pt. 1.

NOTE: The distance from a fanned draught appliance terminal installed parallel to a boundary may not be less than 300mm in accordance with the diagram below

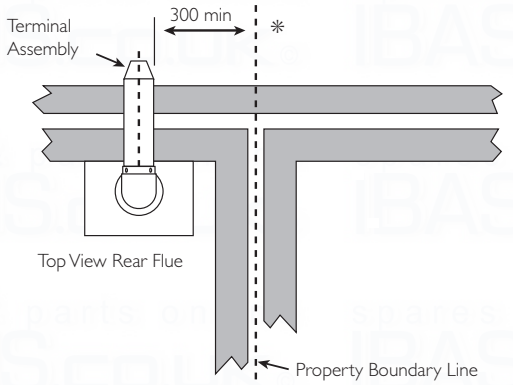

Fig. 17

7.0 Site Requirements

7.8 Flue

NOTE: Due to the nature of the boiler a plume of water vapour will be discharged from the flue. This should be taken into account when siting the flue terminal.

1. The following guidelines indicate the general requirements for siting balanced flue terminals. For GB recommendations are given in BS 5440 Pt 1. For IE recommendations are given in the current edition of I.S. 813 "Domestic Gas Installations".

2. If the terminal discharges onto a pathway or passageway, check that combustion products will not cause a nuisance and that the terminal will not obstruct the passageway.

3. If a terminal is less than 2 metres above a balcony, above ground or above a flat roof to which people have access, then a suitable terminal guard must be provided.

IMPORTANT:
- Only **ONE** 25mm clearance is allowed per installation.
- Under car ports we recommend the use of the plume displacement kit.
- The terminal position must ensure the safe and nuisance - free dispersal of combustion products.

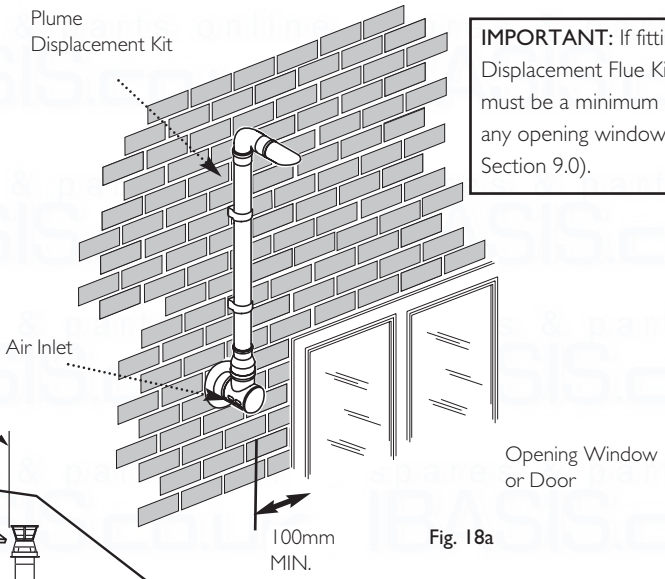

IMPORTANT: If fitting a Plume Displacement Flue Kit, the air inlet must be a minimum of 100mm from any opening windows or doors (see Section 9.0).

Fig. 18a

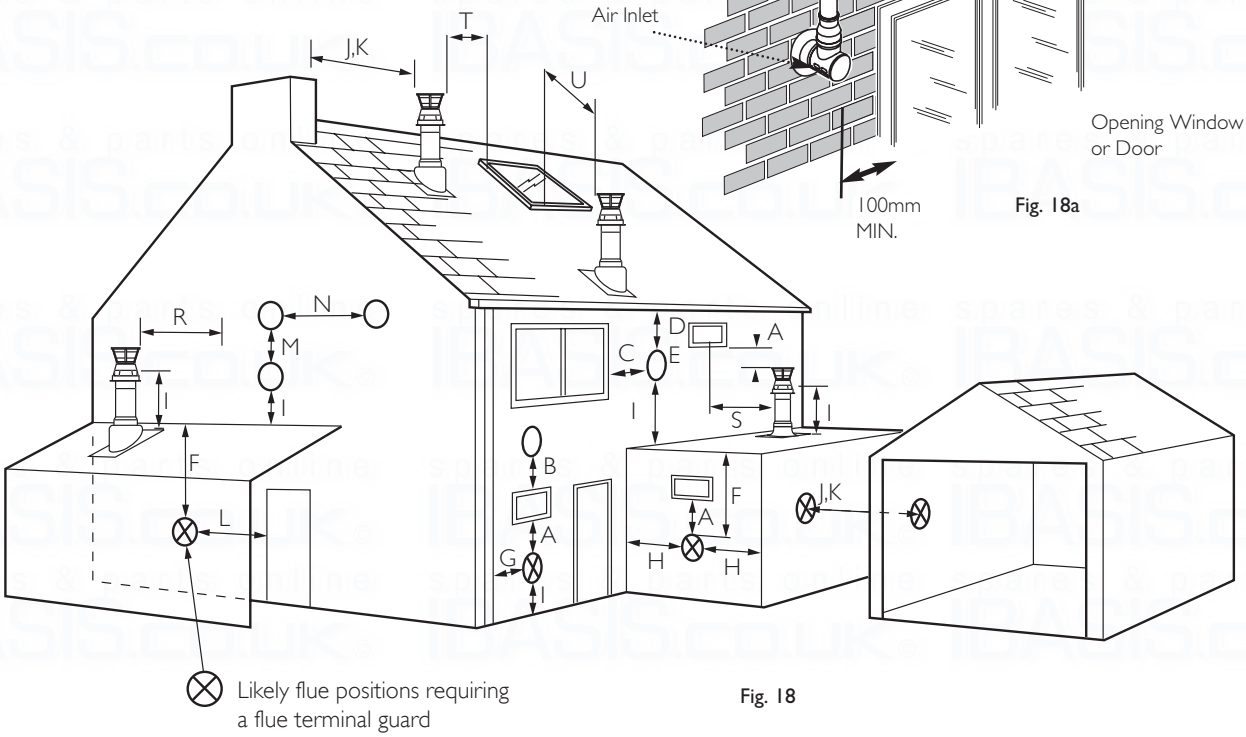

Fig. 18

 © Baxi Heating UK Ltd 2007

8.0 Flue Options

8.1 Horizontal Flue Systems

1. The standard flue is suitable only for horizontal termination applications.

2. All fittings should be fully engaged. The approximate engagement is 40mm. Apply soap solution to the seal on each fitting to aid assembly.

3. Maximum permissible equivalent flue lengths are:-

	(60/100)	(80/125)
Horizontal Concentric	10 metres	20 metres

4. Any additional "in line" bends in the flue system must be taken into consideration.
Their equivalent lengths are:-
Concentric Pipes:

135° bend	0.5 metres
93° bend	1.0 metres

Twin Flue Pipe

135° bend	0.25 metres
91.5° bend	0.50 metres

4. The elbow connected to the boiler adaptor is not included in any equivalent length calculations.

5. The illustrations opposite show examples of permissible flue systems.

NOTE: Flue length is measured from point X to Y as shown.

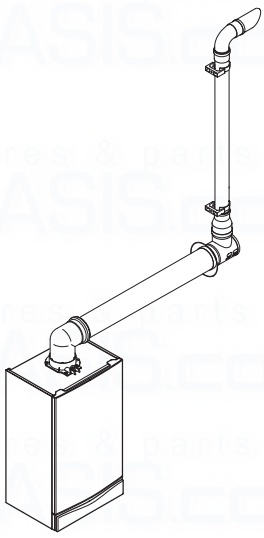

Plume Displacement Kit 60 /100 Ø
1M Extensions, 45° & 93° bends are also available - see Section 9.0

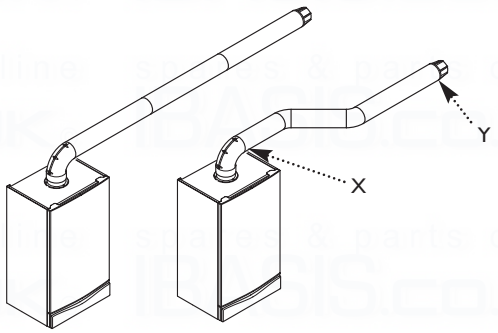

Horizontal Flues

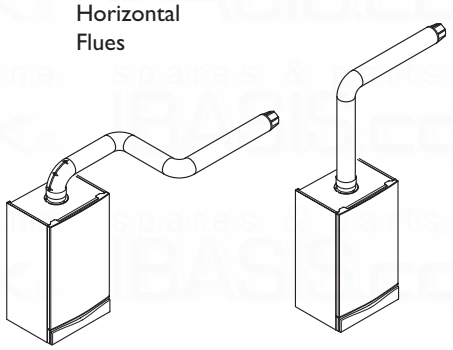

NOTE: Horizontal flue pipes should always be installed with at least a 1.5° fall from the terminal to allow condensate to run back to the boiler.

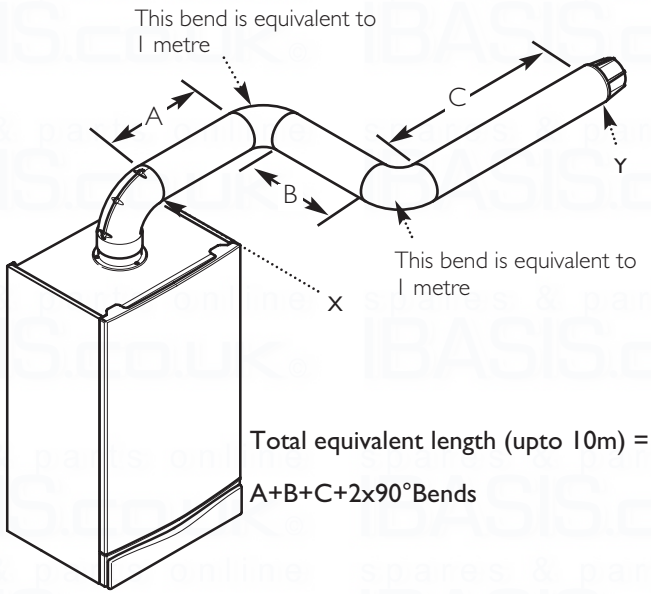

Total equivalent length (upto 10m) =

A+B+C+2x90°Bends

© Baxi Heating UK Ltd 2007

8.0 Flue Options

8.2 Twin & Vertical Flue Systems

1. Maximum permissible equivalent flue lengths are:-

	(60/100)	(80/125)
Vertical Concentric	10 metres	20 metres
Vertical Twin Pipe	15 metres	

2. Any additional "in line" bends in the flue system must be taken into consideration.
Their equivalent lengths are:-

Concentric Pipes:

135° bend	0.5 metres
93° bend	1.0 metres

Twin Flue Pipe

135° bend	0.25 metres
91.5° bend	0.50 metres

The elbow supplied with the standard horizontal telescopic flue kit is not included in any equivalent length calculations

NOTE: Flue length is measured from point X to Y as shown.

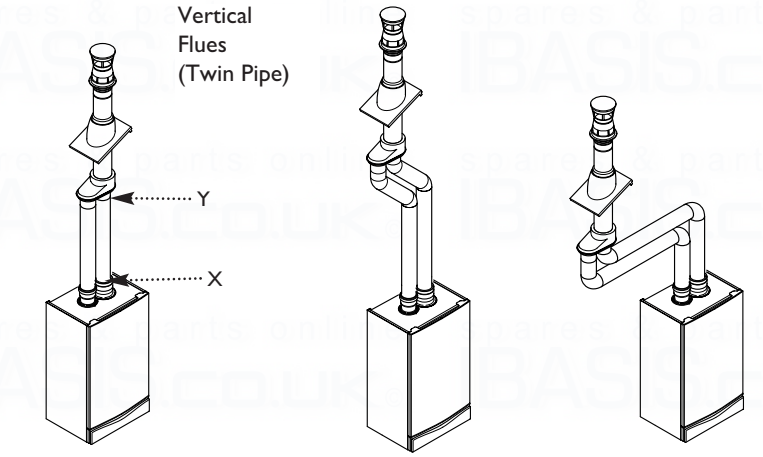

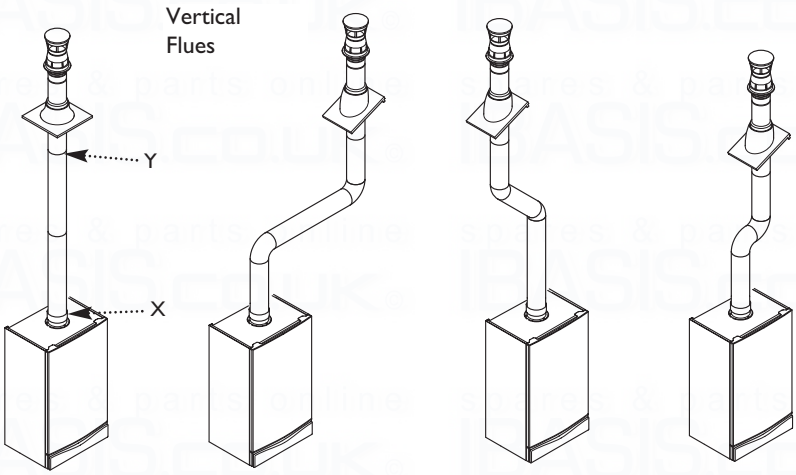

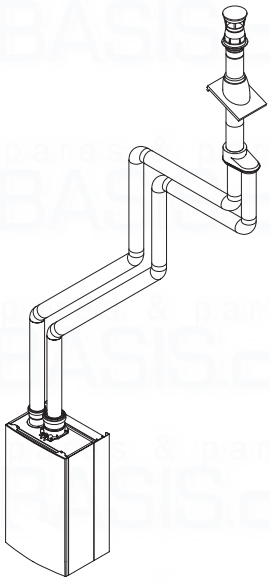

Total Equivalent Length = A+B+C+1x90°Bend

All vertical and angled runs must be included, measured from the boiler adaptor (point X) to the joint with the flue terminal (point Y). One 91.5° bend or two 135° bends can be included without reduction of the flue length.

If further elbows are required the flue length must be reduced by the following amounts:-

1 metre for each 91.5° bend
0.5 metre for each 135° bend

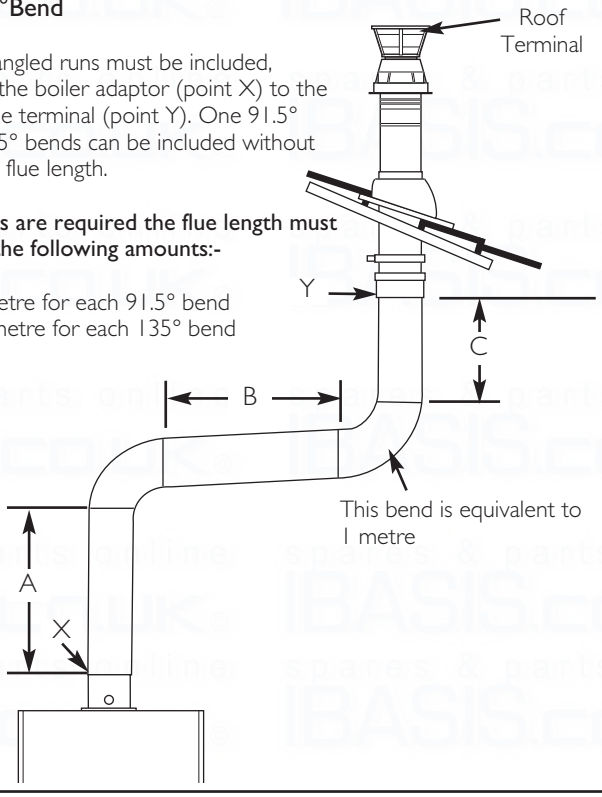

The total equivalent length for this example is = 6.5 metres.

	AIR DUCT		
	Equivalent Length Value	N° of fittings/pipes	Sub total
1m extension	1m	5	5.0m
135°bend	0.25m	2	0.5m
91.5°bend	0.5m	2	1.0m
	Equivalent Length Air Duct = **6.5m**		

	FLUE DUCT		
	Equivalent Length Value	N° of fittings/pipes	Sub total
1m extension	1m	5	5.0m
135°bend	0.25m	2	0.5m
91.5°bend	0.5m	2	1.0m
	Equivalent Length Flue Duct = **6.5m**		

 © Baxi Heating UK Ltd 2007

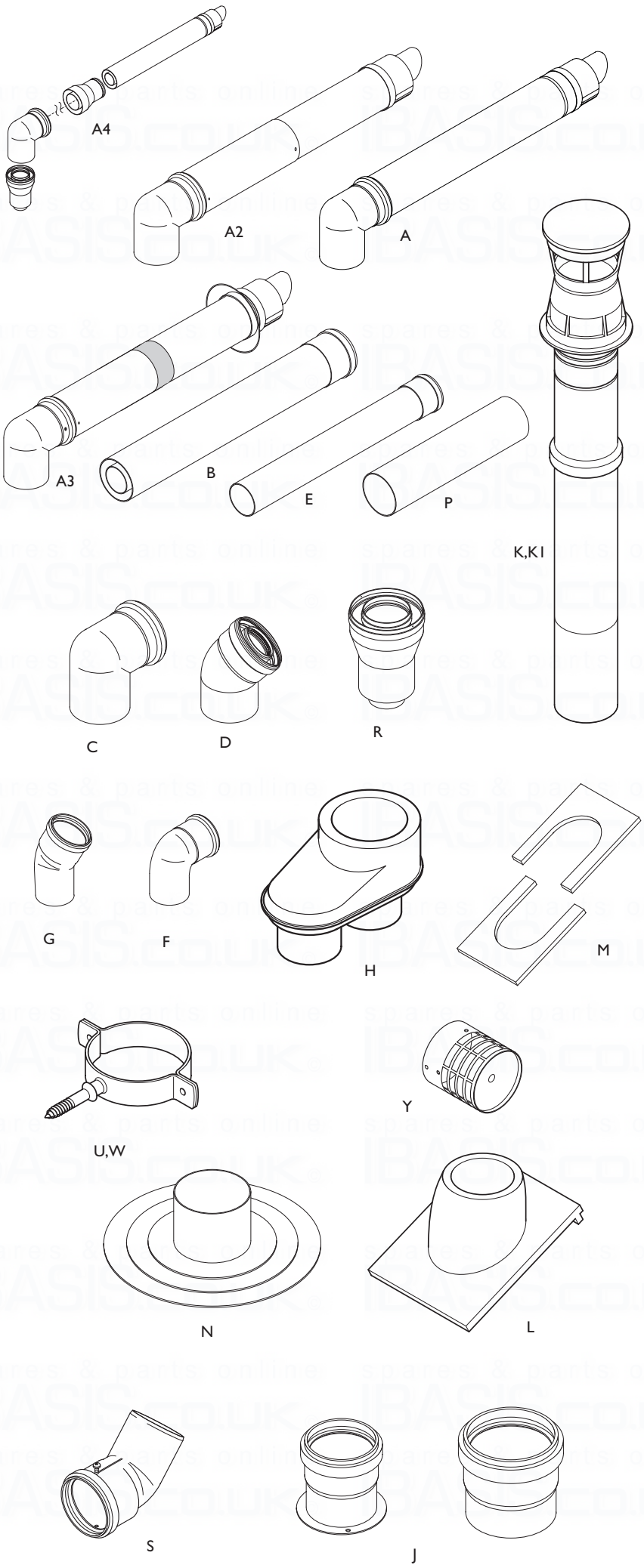

8.0 Flue Options

8.3 Flue Accessories

Key	Accessory	Size	Code No
FLUE GROUP A			
Concentric Flue System 100mm diameter			
A	Horizontal Flue Terminal (inc. elbow)		5118489
A2	Telescopic Flue (inc. elbow)	315-500mm	5118069
A3	Telescopic Internal Flue Kit	315-500mm	5119654
B	Flue Extension	1000mm	5111074
C	Flue Bend	93°	5111075
D	Flue Bend (pair)	135°	5111085
U	Pipe Support (painted)	100Ømm	5111080
R	Vertical Flue Adaptor		5111070
P	Wall Liner		5111067
S	Flue Terminal Deflector		5111068
FLUE GROUP N			
Twin Flue System 80mm diameter			
E	Flue Extension (pair)	1000mm	5111087
F	Flue Bend (pair)	90°	5111072
G	Flue Bend (2 pair)	135°	5111086
J	Vertical Flue Boiler Adaptor Kit		5111079
H	Vertical Flue Adaptor		5111084
W	Pipe Support (pair)	80mm	5111081
Y	Twin Flue Termination Kit (horizontal termination)	80mm	5120172
FLUE GROUP G			
Concentric Flue System 80/125mm diameter			
A4	Horizontal Flue Kit		5118580
B	Straight Extension Kit	1000mm	5118584
D	Bend Kit (pair)	135°	5118597
C	Bend	91.5°	5118588
U	Pipe support	125mm	5118610
FLUE GROUP A, N, G			
Vertical Flue Kits			
K	Vertical Flue Terminal (use with 5111070)		5111078
K1	Vertical Flue Terminal		5118576
L	Pitched Roof Flashing	25°/45°	246141
	Pitched Roof Flashing	35°/55°	246142
M	Roof cover plate		246143
N	Flat roof flashing		246144

© Baxi Heating UK Ltd 2007

8.0 Flue Options

For Twin Flue Systems fit the adaptors as follows:-

8.4 Flue Duct Adaptor

1. Engage the flue duct adaptor on the boiler adaptor, making sure that it is pushed down as far as possible.

8.5 Air duct adaptor

1. Undo the screws securing the blanking plate to the boiler top panel. Discard the plate.

2. There are three restrictor plates supplied in the kit. One marked '23' and one marked '27', these can be discarded **The third restrictor MUST be positioned as shown in the diagrams below.**

3. Take one of the gaskets supplied in the kit and place on the boiler top panel.

4. Align the appropriate restrictor as shown. Position the second gasket over the restrictor.

5. Using the screws previously removed secure the inlet adaptor to the top panel.

6. Continue to fit the twin flue system.

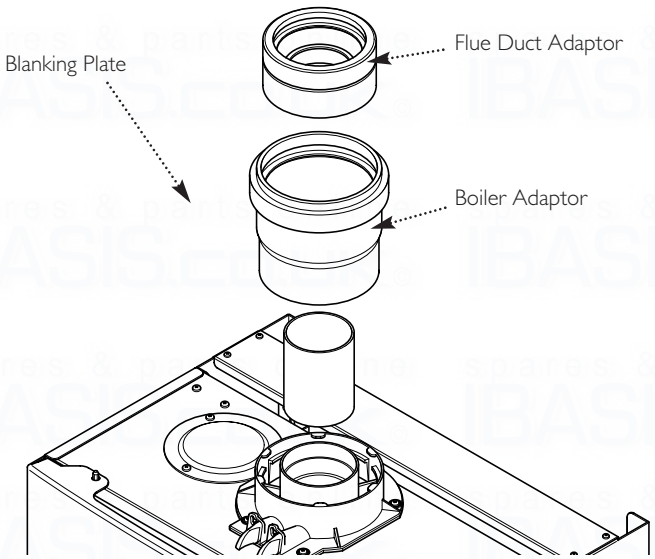

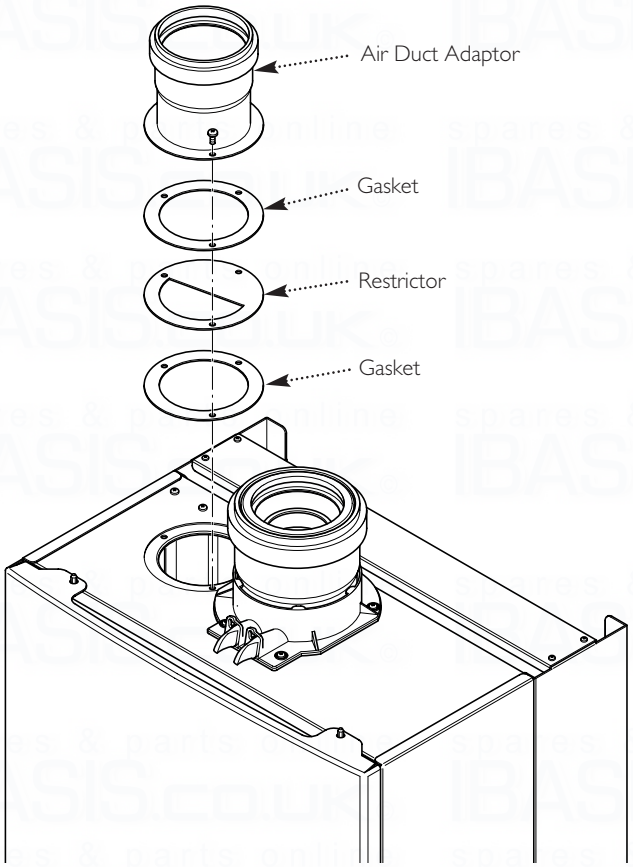

Position of Restrictor

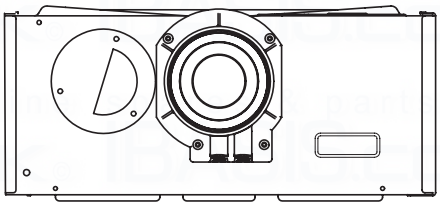

24 kW models

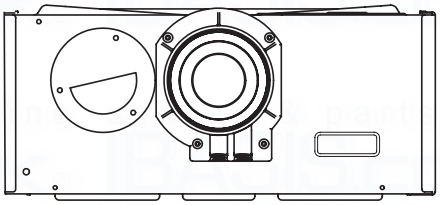

28/33 kW models

 © Baxi Heating UK Ltd 2007

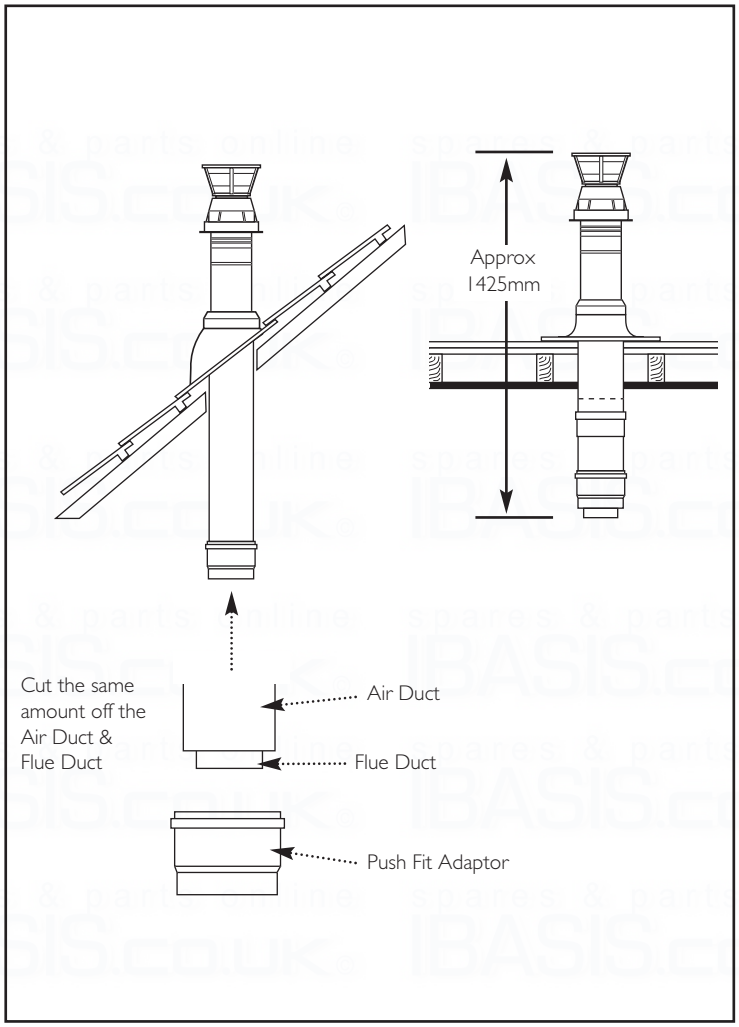

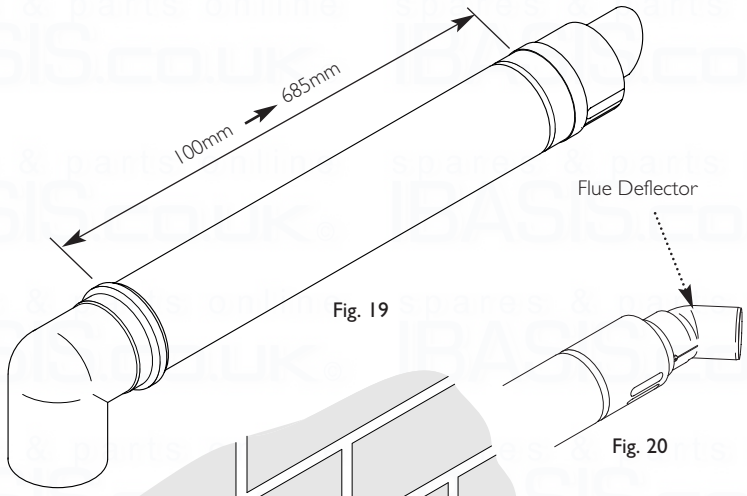

Fig. 19

Fig. 20

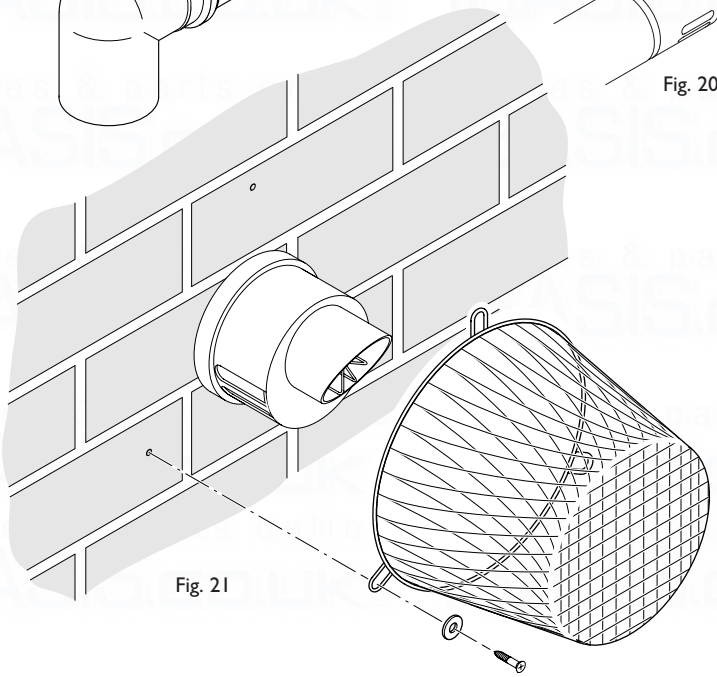

Fig. 21

8.0 Flue Options

8.6 For Roof Terminals

1. In the case of a pitched roof 25 - 50 degrees, position the lead tile to replace/flash over existing roof tiling. Make an aperture in the roof suitable for the lower tube of the roof terminal and ensure the integrity of the roof cover is maintained. The adjustable plastic collar can either be positioned on the lead tile or the lower tube of the roof terminal prior to the final positioning of the vertical flue through the tile. Check the collar is correctly located to suit required roof pitch (either 25° to 38° or 37° to 50°). From inside the roof adjust the flue to a vertical position and secure to the roof structure with the clamp supplied.

2. For flat roof installations the aluminium flashing must be incorporated into the roof covering and the appropriate aperture made in the roof decking. The vertical flue is lowered onto the flashing making sure the collar of the flue locates securely with the flashing. (A mastic seal may be necessary). From inside the roof, adjust the flue to a vertical position and secure to the roof structure with the clamp supplied.

8.7 Flue Dimensions

The standard horizontal flue kit allows for flue lengths between 100mm and 685mm from elbow to terminal (Fig. 19).

The maximum permissible equivalent flue length is:
10 metres (60/100 system)
20 metres (80/125 system)

8.8 Flue Trim

1. The rubber flue trim supplied may be fitted to either the outside wall or on the inner wall of installation.

8.9 Terminal Guard (Fig. 21)

1. When codes of practice dictate the use of terminal guards, they can be obtained from most Plumbers' and Builders' Merchants.

2. There must be a clearance of at least 50mm between any part of the terminal and the guard.

3. When ordering a terminal guard, quote the appliance name and model number.

4. The flue terminal guard should be positioned centrally over the terminal and fixed as illustrated.

8.10 Flue Deflector (Fig. 20)

1. If required a flue deflector is available from your Potterton stockist.

2. Push the flue deflector over the teminal end and rotate to the optimum angle for deflecting plume. Secure the deflector to the terminal with screws provided.

© Baxi Heating UK Ltd 2007

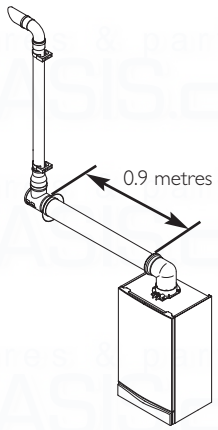

Fig. 22

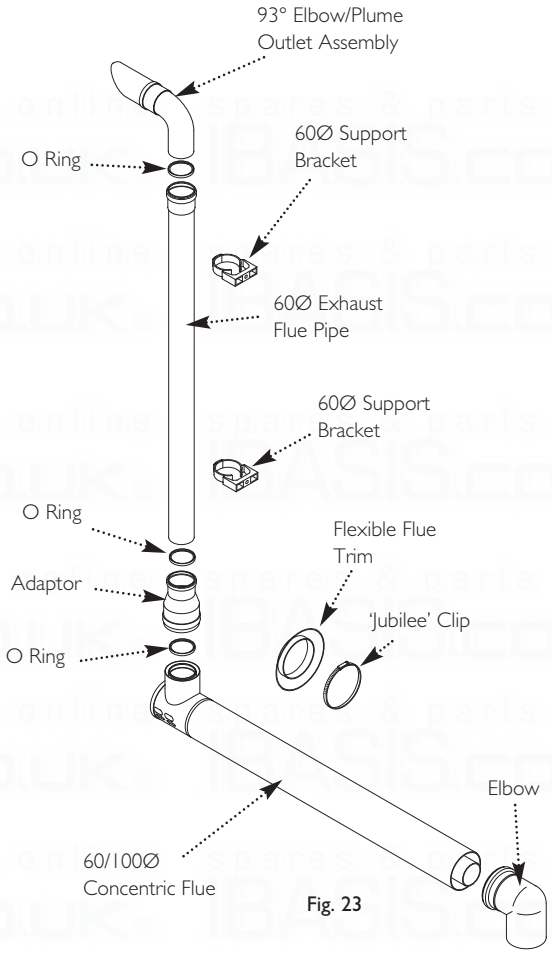

Fig. 23

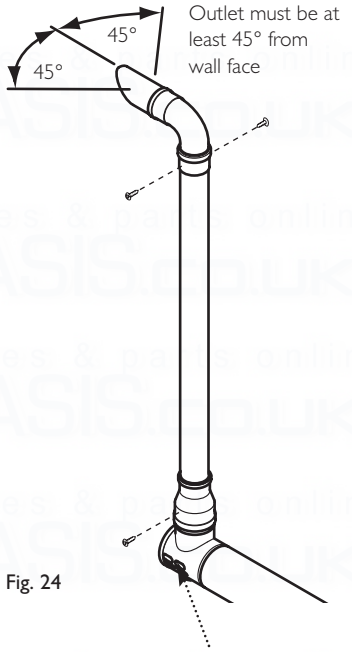

Fig. 24

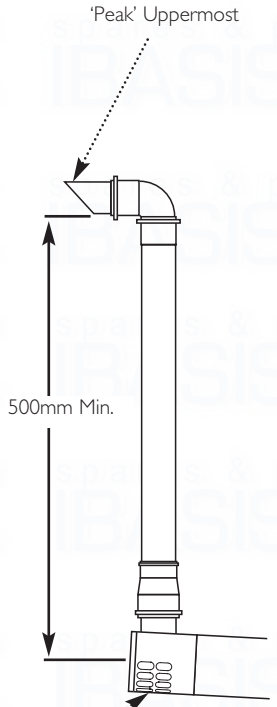

Fig. 25

9.0 Plume Displacement

9.1 Plume Displacement Kit (Fig. 23)

Kit No 5118638

Content of kit

- 1 0.9m 60/100 Concentric Flue
- 1 1m 60 Dia Exhaust Flue Pipe
- 1 Adaptor
- 2 60 Dia Support Brackets
- 1 93° Elbow/Plume Outlet Assembly
- 1 Flexible Flue Trim
- 3 "O" Rings
- 1 'Jubilee Clip
- 1 Boiler Elbow

1. This kit is recommended for installations where the condensate plume emitted from the flue may cause a nuisance or affect the surroundings.

2. The terminal must be positioned outside the building with the air inlet facing downward and outlet connection upwards.

3. The plume outlet must always be at least 45° to the wall, with the 'peak' uppermost to prevent rain entry (Figs. 24 & 25), and be at least 2 metres above ground level. It must be secured as shown in Fig. 19. The plume outlet must also be at least 500mm from the air inlet in any direction (Fig. 25).

NOTE: The outlet must be positioned so that any condensate plume is directed away from adjacent surfaces. There must be a constant fall along the entire length of the flue system from the outlet back to the boiler.

4. It is possible to reduce or increase (with the addition of extensions) the length of either or both the 60/100 concentric and 60Ø exhaust.

5. Standard concentric flue extension kits may be added between the boiler elbow and the terminal assembly.

6. The minimum length of the concentric flue is 100mm when measured from the edge of the flue elbow.

IMPORTANT: The maximum equivalent length of concentric flue is:- **8 metres**
Additional bends may be fitted in the concentric flue, but the equivalent length must be reduced by 1 metre (93° bend) or 0.5 metres (45° bend).

7. 60Ø 1 metre extensions (including support bracket), and additional 93° & 45° elbows are available. Any additional 93° & 45° elbows must be accounted for when calculating flue lengths.

NOTE: Permitted positions of the plume outlet relative to doors, windows etc. are the same as for conventional concentric flues as detailed in the main Installation & Servicing Instructions and BS5440 Pt. 1. It is **NOT** necessary to fit a terminal guard over the air inlet or the plume outlet.

 © Baxi Heating UK Ltd 2007

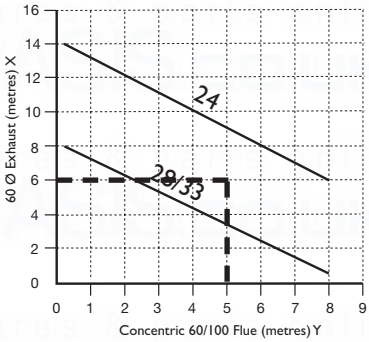

Example 1
Flue Lengths - Not Permissible

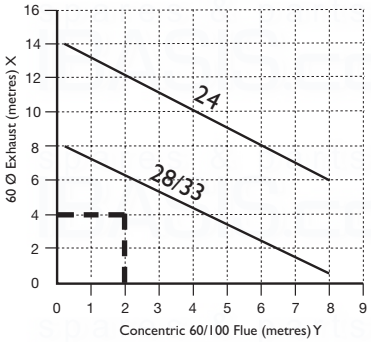

Example 2
Flue Lengths - OK

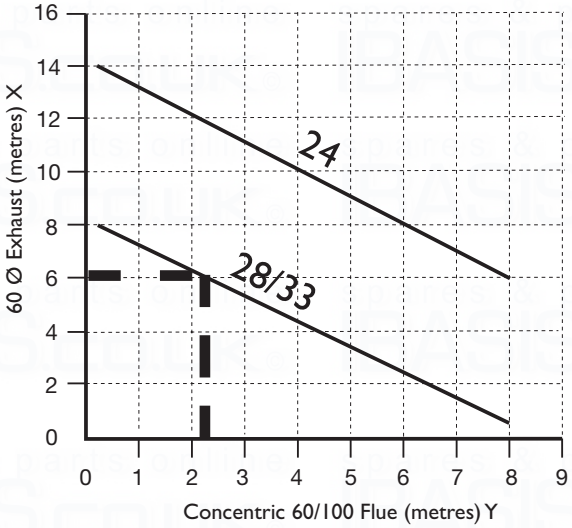

Example 3
Flue Lengths - OK

9.2 Determining Permissible Lengths

In the graph the solid line diagonal represents the relationship between the concentric flue assembly (and any extensions) and the 60Ø exhaust (and any extensions or additional bends).

Example 1 - Not Permissible
If, for instance, a concentric length of 5 metres was required and the 60Ø exhaust needed to be 6 metres the graph shows that this combination would NOT be permissible as the intersection point would be above the solid diagonal line.

Example 2 - Flue Lengths OK
Where both lengths have been determined they can be applied to the graph to check that the installation is permissible. For example, if it was known that 2 metres of concentric flue and 4 metres of 60Ø exhaust were required, the values could be applied to the graph as shown in Example 2.. As the point of intersection of the dotted lines is below the solid diagonal line, the combination of lengths is shown to be acceptable.

Example 3 - Flue Lengths OK
In the example shown in Fig. 4 assume that the concentric part of the flue needs to be 2.3 metres long. Find the position of '2.3' on the horizontal axis of the graph and then project upwards to the solid diagonal line. This is represented by the vertical thick dotted line. Where this dotted line intersects with the solid diagonal line on the graph, project across to the vertical axis. As can be seen this corresponds with 6 metres. Therefore, the total equivalent length of the 60Ø exhaust can be up to 6 metres. Any bend equivalencies must be accounted for i.e. 93° bends are equal to 1 metre, each 45° bend to 0.5 metres.

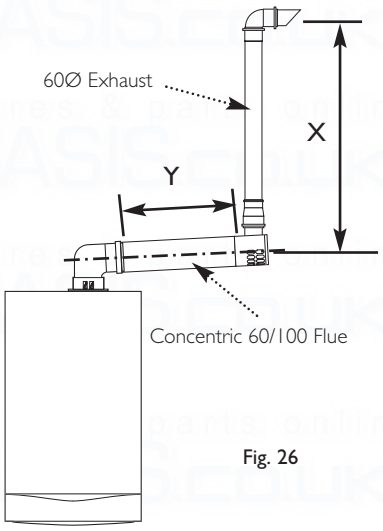

Fig. 26

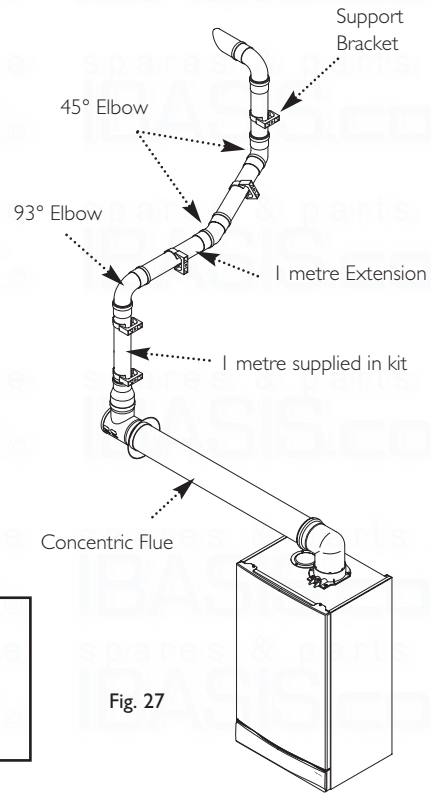

Fig. 27

Flue Length - Worked Example
Potterton Promax Combi 33HE

In Fig. 27 opposite an additional 93° bend and pair of 45° elbows have been included in the 60Ø exhaust.
Also 3 straight extension pieces have been used.

To calculate total length:-

Length of 60Ø supplied in kit =	1 metre
3 x 1 metre Extensions =	3 metres
1 x 93° Elbow =	1 metre
2 x 45° Elbow =	1 metre (0.5 metres each)
Total 60Ø =	6 metres

After consulting the table in Example 3 it can be determined that the concentric flue could be up to approximately 2.3 metres long.

Additional Accessories

A - 93° Elbow	5117381
B - 45° Elbow (Pair)	5117382
C - 1 metre 60Ø Extension	5117380

© Baxi Heating UK Ltd 2007

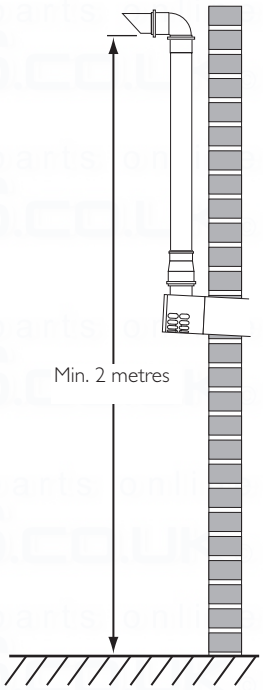

Fig. 28

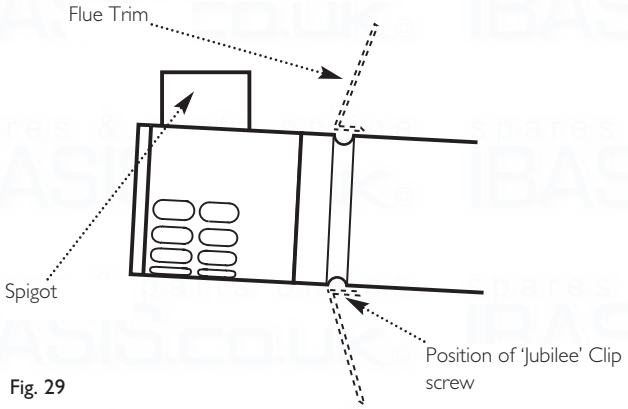

Fig. 29

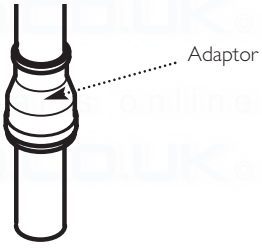

Fig. 31

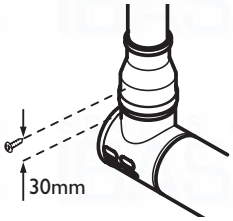

Fig. 30

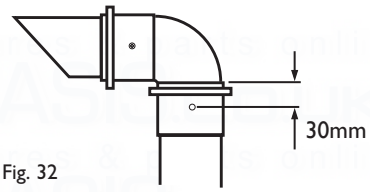

Fig. 32

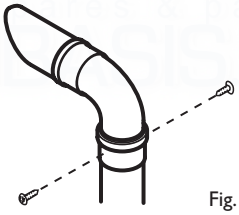

Fig. 33

9.3 General Fitting Notes

1. Cut a hole in the external wall which the concentric flue assembly will pass through. The hole should allow the flue to fall back to the boiler at an angle of at least 1.5°.

2. When completed the terminal must be at least 2 metres above ground level (Fig. 28).

3. Measure and cut to size the concentric assembly and any extensions that are being used.

4. Insert the concentric assembly through the hole from outside the building.

5. If required, the flexible flue trim should be fitted prior to this as it cannot be fitted after. Use the large 'Jubilee' clip to secure the trim to the flue (See Fig. 29, trim shown dotted), with the screw part of the clip at the bottom.

6. Connect any extensions or elbows that are being used to the concentric assembly. Engage the extension, elbow or concentric assembly in the boiler flue elbow. Fit the boiler flue elbow to the boiler adaptor.

7. Ensure that the concentric assembly and any extensions fall back to the boiler at an angle of 3° and that the external air inlet is to the bottom.

8. Use suitable brackets to support the concentric assembly and any extensions, and make good inside and outside.

9. The 60Ø exhaust can now be fitted. Slide the adaptor over the plain end of the 60Ø exhaust (Fig. 31) and engage the exhaust in the terminal. Slide the adaptor down over the spigot. Mark and drill the adaptor, using a 2mm bit, as shown in Fig. 30. Secure the adaptor to the spigot using one of the screws supplied.

10. If it is necessary to shorten the 60Ø exhaust or any of the extensions, the excess material must be cut from the plain end of the pipe.

11. Determine the position of the 60Ø exhaust and mark on the wall a suitable position for the support bracket. If extensions are being used, a support bracket is supplied in each kit.

12. Drill the wall, and fit the bracket(s) using the plug and screw provided.

13. Mark and drill the 60Ø exhaust, using a 2mm bit, as shown in Fig. 32. Complete the installation of the 60Ø exhaust, securing in the brackets.

14. Fit the 93° elbow/plume outlet and secure with the two remaining screws supplied. Ensure the plume outlet is at least 45° to the wall and that the 'peak' is uppermost (Fig. 33).

 © Baxi Heating UK Ltd 2007

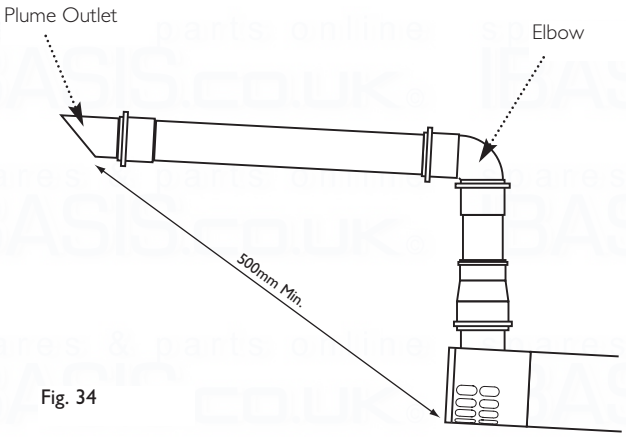

Fig. 34

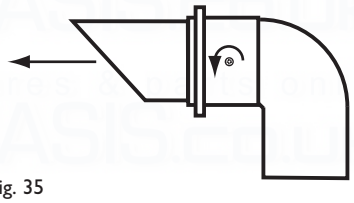

Fig. 35

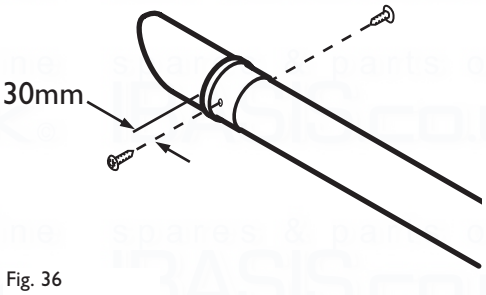

Fig. 36

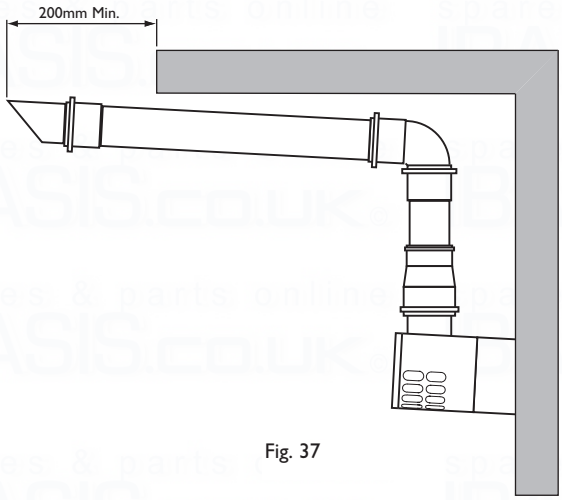

Fig. 37

9.3 General Fitting Notes (cont.)

15. For aesthetic purposes it is permissible to route the 60Ø exhaust in an enclosed box, but the air inlet and plume outlet MUST remain in free air.

16. It is also possible to separate the plume outlet from the 93° elbow to allow the flue to be installed as shown in Fig. 34.

17. To do this, first slacken the two screws retaining the plume outlet to the elbow, and remove the outlet (Fig. 35). The elbow can now be used to connect the vertical to horizontal 60Ø exhaust (Fig. 34). Retighten the screws in the elbow.

18. The outlet can now be fitted into the female end of an 60Ø extension piece. It must be secured using two of the screws supplied in the bag with the 'Jubilee' clip.

19. Mark the female end of the extension at 30mm as shown in two positions, directly opposite each other (Fig. 36).

20. Using a suitable bit (e.g. 2mm), drill through the extension and outlet. Secure using two of the screws supplied.

21. The remaining screw must be used to secure the adaptor to the concentric terminal.

22. When the plume outlet is positioned under a balcony or other projection (Fig. 37) it must protrude at least 200mm (it is not necessary to extend it further than this).

23. When under balconies or projections it is permissible to rotate the concentric flue length up to 70°, clockwise or anti-clockwise (Fig. 38), if there is insufficient space to connect vertically.

24.This will allow the connection of the exhaust to the outlet spigot.

25. All other minimum & maximum dimensions must be adhered to, and the air inlet positioned such that it will not be subjetc to rain entry.

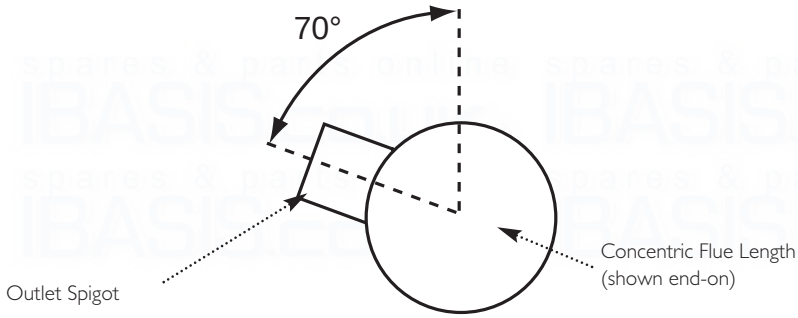

Fig. 38

© Baxi Heating UK Ltd 2007

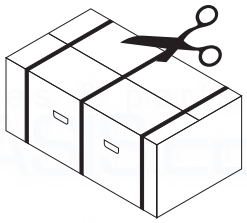

Fig. 39

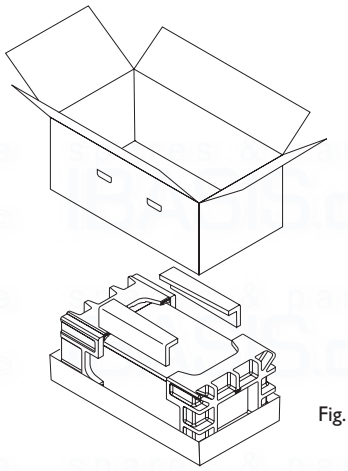

Fig. 40

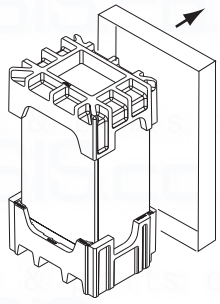

Fig. 41

METHOD 1

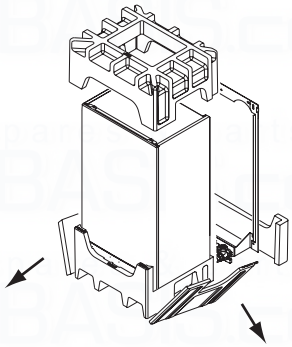

Fig. 42

There are two different methods of packaging
Method 1 - (Fig. 39 to 42)
Method 2 - (Fig. 42a to 42b)

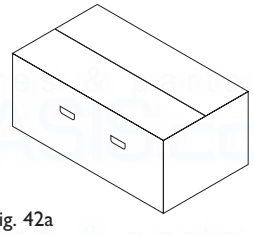

Fig. 42a

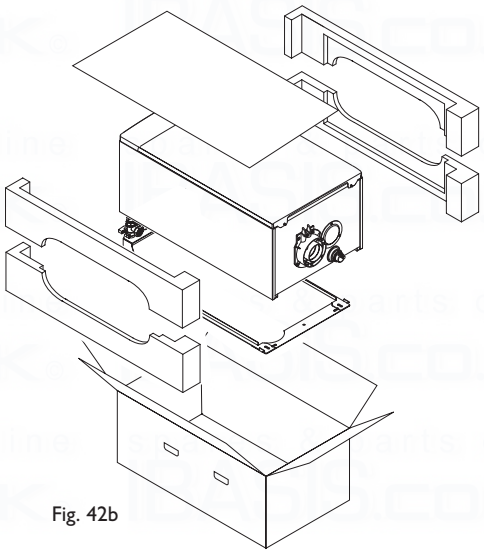

Fig. 42b

METHOD 2

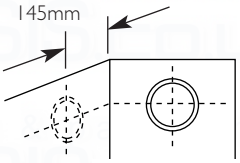

For Side Flue Exit

Fig. 43

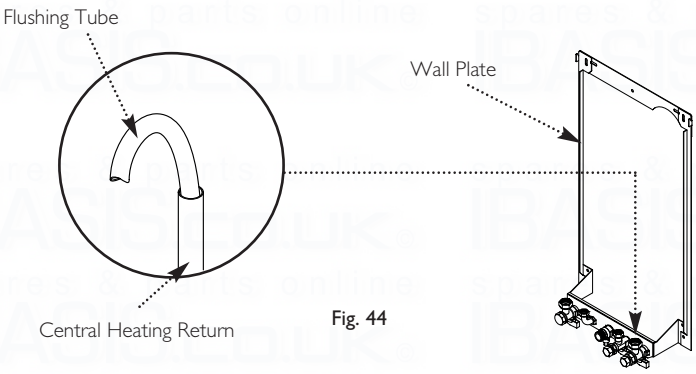

Fig. 44

10.0 Installation

10.1 Unpacking & Initial Preparation

The gas supply, gas type and pressure must be checked for suitability before connection (see Section 7.4).

Method 1

a) Remove the outer packaging and literature, and stand the boiler and inner packaging upright. Remove the base tray (Figs. 39, 40 & 41).

b) Slide the upper polystyrene cap off the boiler. Break off the side and rear of the lower polystyrene cap. The wall plate can now be removed (Fig. 42).

NOTE: a small amount of water may drain from the boiler in the upright position.

Method 2

c) Remove staples, open flaps and remove the cardboard sheet. Remove the polystyrene side pieces and literature. Two people can then lift out the boiler.

1. After considering the site requirements (see Section 7.0) position the fixing template on the wall ensuring it is level both horizontally and vertically.

2. Mark the position of the two most suitable fixing slots for the wall plate and boiler lower fixing holes. It is preferable to use the vertical fixing slots.

3. Mark the position of the centre of the flue hole (rear exit). For side flue exit, mark as shown (Fig. 43).

4. If required, mark the position of the gas and water pipes. Remove the template.

5. Cut the hole for the flue (minimum diameter 116mm).

6. Drill the wall as previously marked to accept the wall plugs supplied. Secure the wall plate using the fixing screws.

7. Using a spirit level ensure that the plate is level before finally tightening the screws.

8. Connect the gas and water pipes to the valves on the wall plate using the copper tails supplied. Ensure that the sealing washers are fitted between the connections.

10.2 Flushing

1. Connect a tube to the central heating flow or return pipe (Fig. 44).

2. Flush thoroughly (see System Details, Section 6.1).

 © Baxi Heating UK Ltd 2007

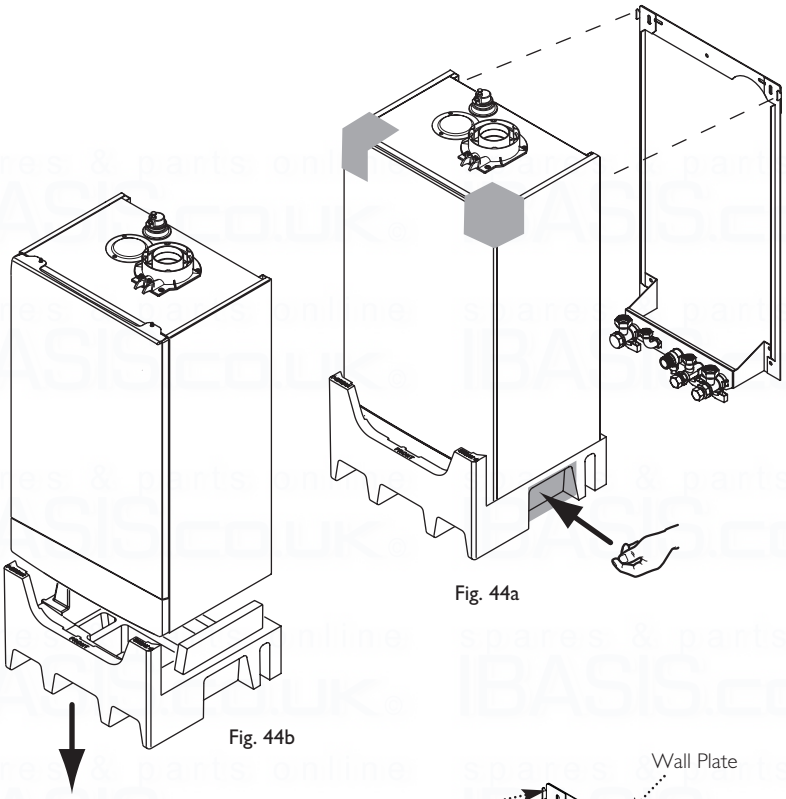

Fig. 44a

Fig. 44b

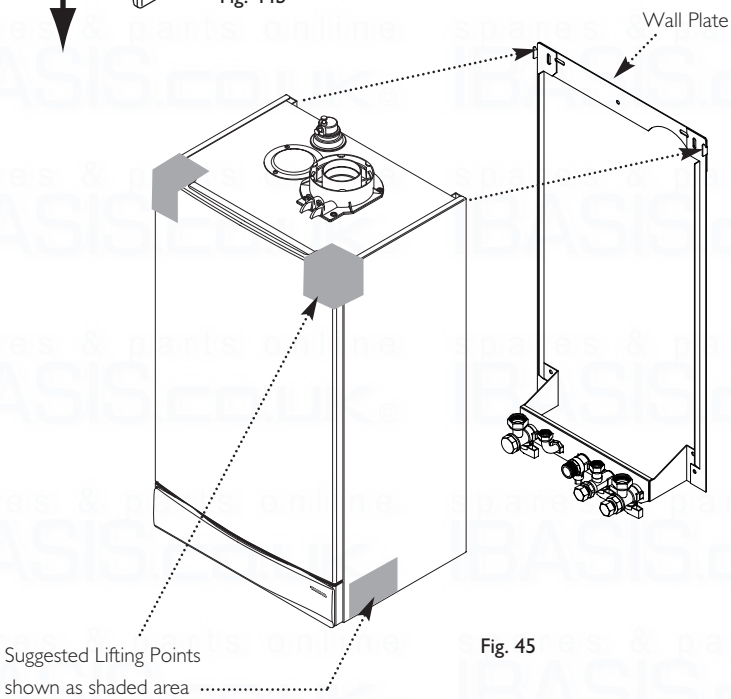

Fig. 45

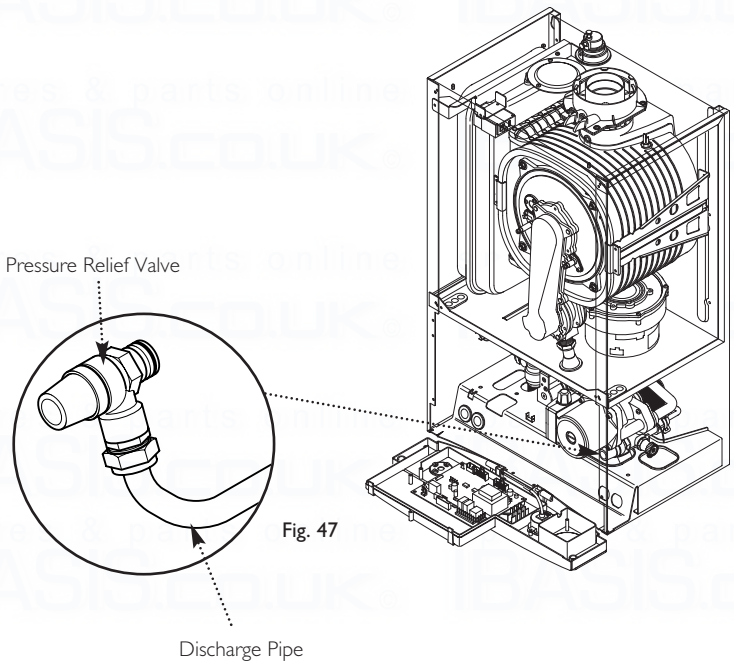

Fig. 47

10.0 Installation

10.3 Fitting The Boiler

1. Lift the boiler using the Lifting Points as shown by the shaded areas (Figs. 44a or 45). The boiler should be lifted by TWO PEOPLE. Engage the slots at the top rear of the boiler on the wall plate(see **Safe Manual Handling** page 5).

2. Pull the lower polystyrene cap off the boiler (where used). Ease the boiler forwards and remove the sealing caps from the boiler connections.

NOTE: A small amount of water may drain from the boiler once the caps are removed.

3. **Insert the sealing washers between the valves and pipes on the wall plate and the boiler connections. THE RUBBER WASHERS MUST BE USED ON THE GAS CONNECTION.**

4. Tighten all the connections.

10.4 Fitting the Pressure Relief Discharge Pipe (Fig. 47)

1. Remove the discharge pipe from the kit.

2. Determine the routing of the discharge pipe in the vicinity of the boiler. Make up as much of the pipework as is practical, including the discharge pipe supplied.

3. The pipework must be at least 15mm diameter and run continuously downwards to a discharge point outside the building. See section 6.7 for further details.

4. Utilising one of the sealing washers, connect the discharge pipe to the adaptor and tighten the nut.

5. Complete the discharge pipework and route it to the outside discharge point.

IMPORTANT: Make all soldered joints before connecting to the pressure relief valve.

10.5 Condensate Drain (see section 7.7)

1. Connect the condensate drain to the trap outlet pipe.

Ensure the discharge of condensate complies with any national or local regulations in force (see British Gas "Guidance Notes for the Installation of Domestic Gas Condensing Boilers".

2. The connection will accept 21.5mm (3/4in) plastic overflow pipe which should generally discharge internally into the household drainage system. If this is not possible, discharge into an outside drain is acceptable.

© Baxi Heating UK Ltd 2007

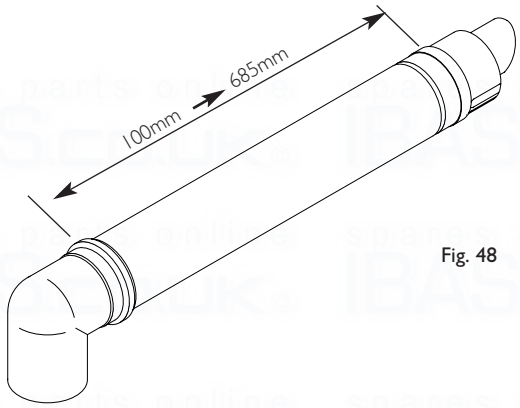

Fig. 48

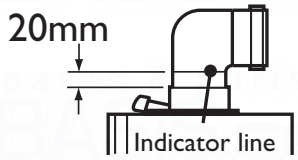

Fig. 49

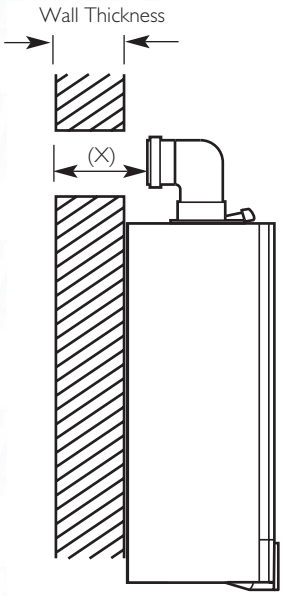

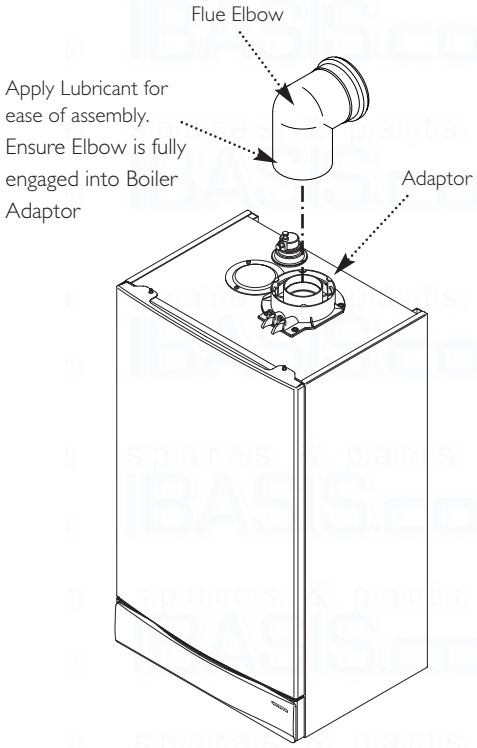

Fig. 50

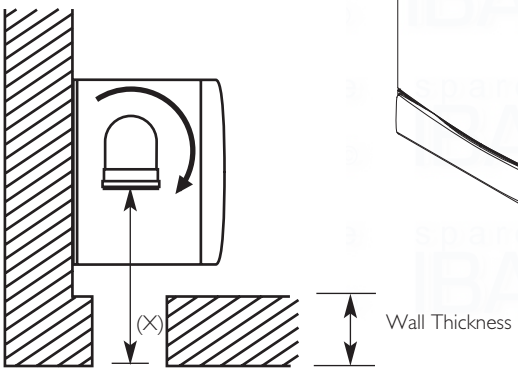

Fig. 51

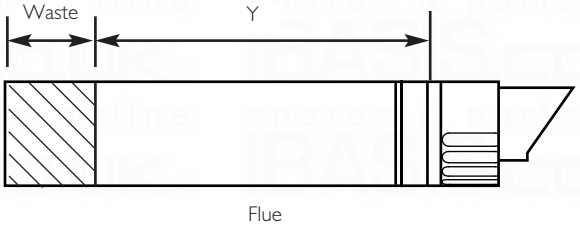

Fig. 52

10.6 Fitting The Flue

HORIZONTAL FLUE

1. The standard flue is suitable for lengths between 100mm minimum and 685mm maximum, as measured from the edge of the flue elbow outlet to the joint between the terminal and air duct (Fig. 48).

2. Locate the flue elbow on the adaptor at the top of the boiler. Set the elbow to the required orientation (Fig. 50). The elbow is fully engaged when there is a distance of 20mm from the adaptor to the indicator line (Fig. 49).

NOTE: The flue elbow is angled at 93 degrees to ensure a fall back to the boiler.

3. Measure the distance from the outside wall face to the elbow. This dimension will be known as 'X' (Fig. 51).

4. To dimension 'X' add 50mm. This dimension to be known as 'Y'.

IMPORTANT: Check all dimensions before cutting.

5. Mark dimension 'Y' on the flue as shown (Fig. 52). Carefully cut the waste material from the flue, ensuring that the ducts are square and free from burrs.

 © Baxi Heating UK Ltd 2007

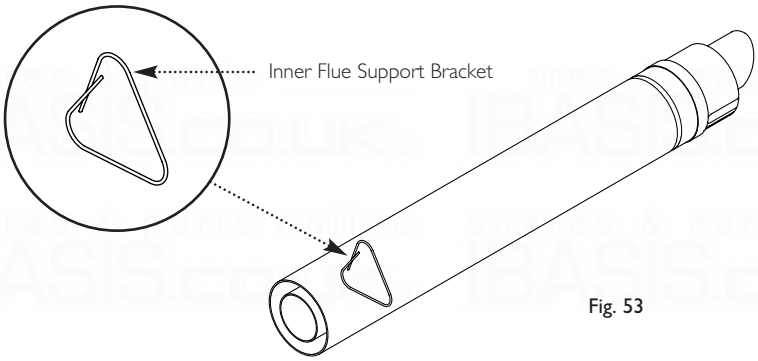

Fig. 53

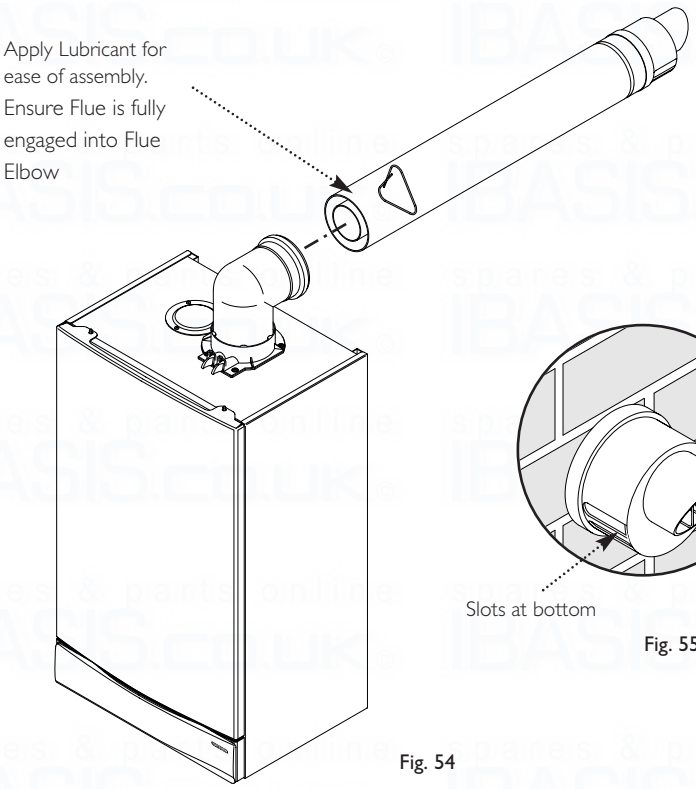

Fig. 54

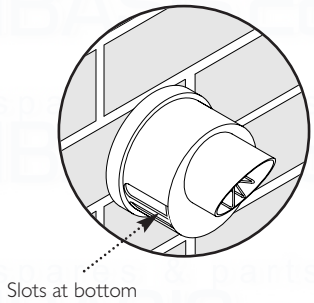

Fig. 55

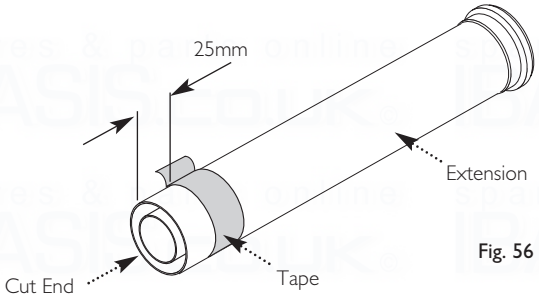

Fig. 56

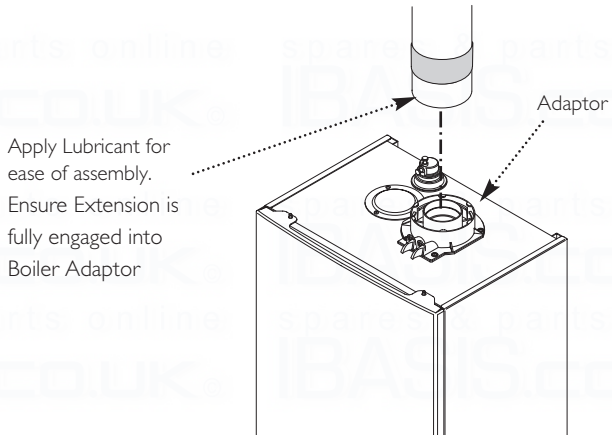

Fig. 57

10.6 Fitting the Flue (Cont)

6. The inner flue duct support bracket may be in the waste portion of the flue. In this case retrieve the bracket before discarding the waste.

7. Take the inner flue support bracket (if not already fitted) and engage it over the flue duct. This will centralise the flue and air ducts, and ease assembly (Fig. 53).

8. Insert the flue through the hole in the wall. Fit the elbow to the boiler adaptor, ensuring that it is pushed fully in.

9. Draw the flue back through the wall and engage it in the elbow. It may be necessary to use soap solution or similar to ease assembly of the elbow adaptor and flue (Fig. 54).

10. Ensure that the terminal is positioned with the slots to the bottom (Fig. 55).

IMPORTANT: It is essential that the flue terminal is fitted as shown to ensure correct boiler operation and prevent water entering the flue.

11. Make good between the wall and air duct outside the building.

12. Fit the flue trim if required, and if necessary fit a terminal guard (see Section 8.8 & 8.9).

CONCENTRIC VERTICAL FLUE

13. Once the length of the vertical concentric extension has been determined mark and carefully cut off the excess material. The cut end MUST be square and free of burrs to ensure correct insertion into the boiler adaptor.

14. Measure 25mm from the end of the flue extension and apply a length of tape around the outer duct (Fig. 56).

15. Engage the extension into the adaptor up to this position (Fig. 57). Once the installation of the flue is complete and all support brackets are securely in place remove the tape.

© Baxi Heating UK Ltd 2007

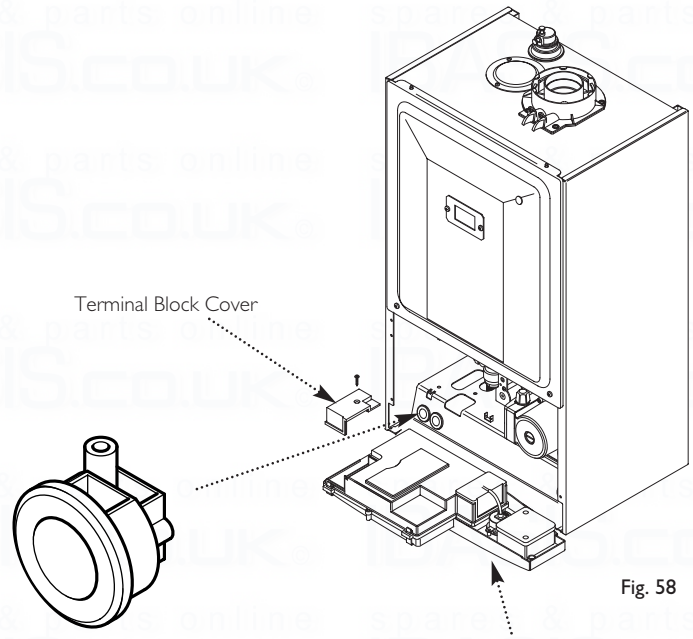

Fig. 58

Fig. 59

10.7 Making The Electrical Connections

The boiler is fitted with a 1.3m length of 3 core cable. This can be connected to the fused 3A 230V 50Hz supply.

NOTE: Both the Live and Neutral connections are fused.

To connect an external control proceed as follows:-

1. Slacken the facia panel securing screws and lift the outercase panel so that its securing tabs are clear of the facia. Remove the panel.

2. Completely undo the screws securing the facia panel and hinge it down (Fig. 58).

3. Undo the terminal block cover securing screw and remove the cover (Fig. 58).

4. Slacken the unused cable clamp on the LH side of the boiler chassis (Fig. 59). Insert the external control wiring through the clamp and route it to the terminal block.

5. Refer to the instructions supplied with the control.

IMPORTANT: The room thermostat **MUST** be suitable for 230V switching.

NOTE: An external frost thermostat cannot be used with the optional integral timer.

6. Remove the link between terminals 1 & 2. The 230V supply at terminal 2 must be connected to the thermostat. The switched output from the thermostat must be connected to terminal 1 (Fig. 60). If the room thermostat being used incorporates an anticipator it MUST be wired as shown in Fig. 60.

7. Ensure that the external control input cable(s) have sufficient slack to allow the control box to drop down. Tighten the cable clamp on the boiler chassis.

8. Replace the terminal block cover, routing the external control input cable(s) through the second cut-out.

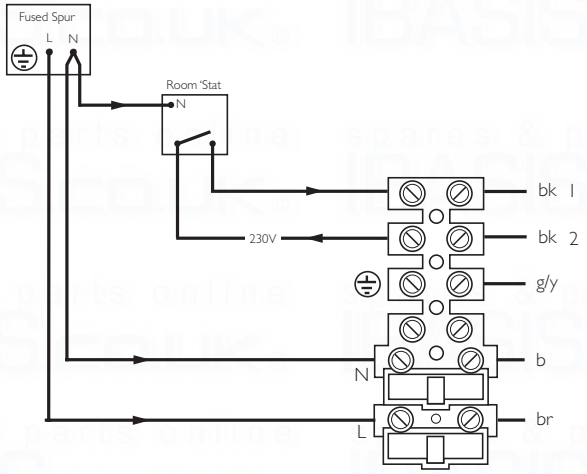

Fig. 60

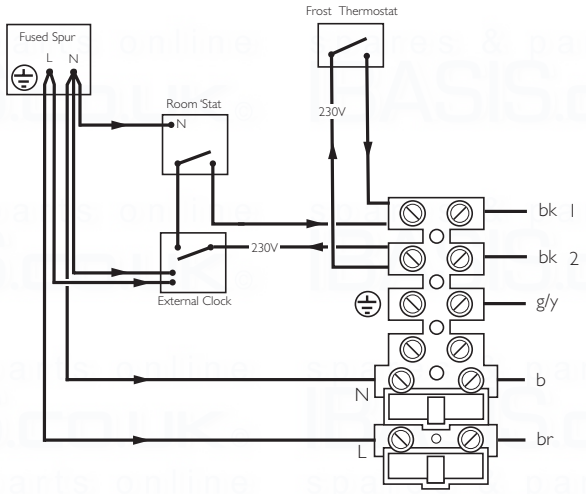

NOTE: The 230V switched signal for external controls (Frost Stat - Room Stat - Timer) must always be taken from terminal 2 at the boiler. Live, Neutral and Earth to power these controls must be taken from the Fused Spur.

10.8 Preliminary Electrical Checks

1. Prior to commissioning the boiler preliminary electrical system checks should be carried out.

2. These should be performed using a suitable meter, and include checks for Earth Continuity, Resistance to Earth, Short Circuit and Polarity.

 © Baxi Heating UK Ltd 2007

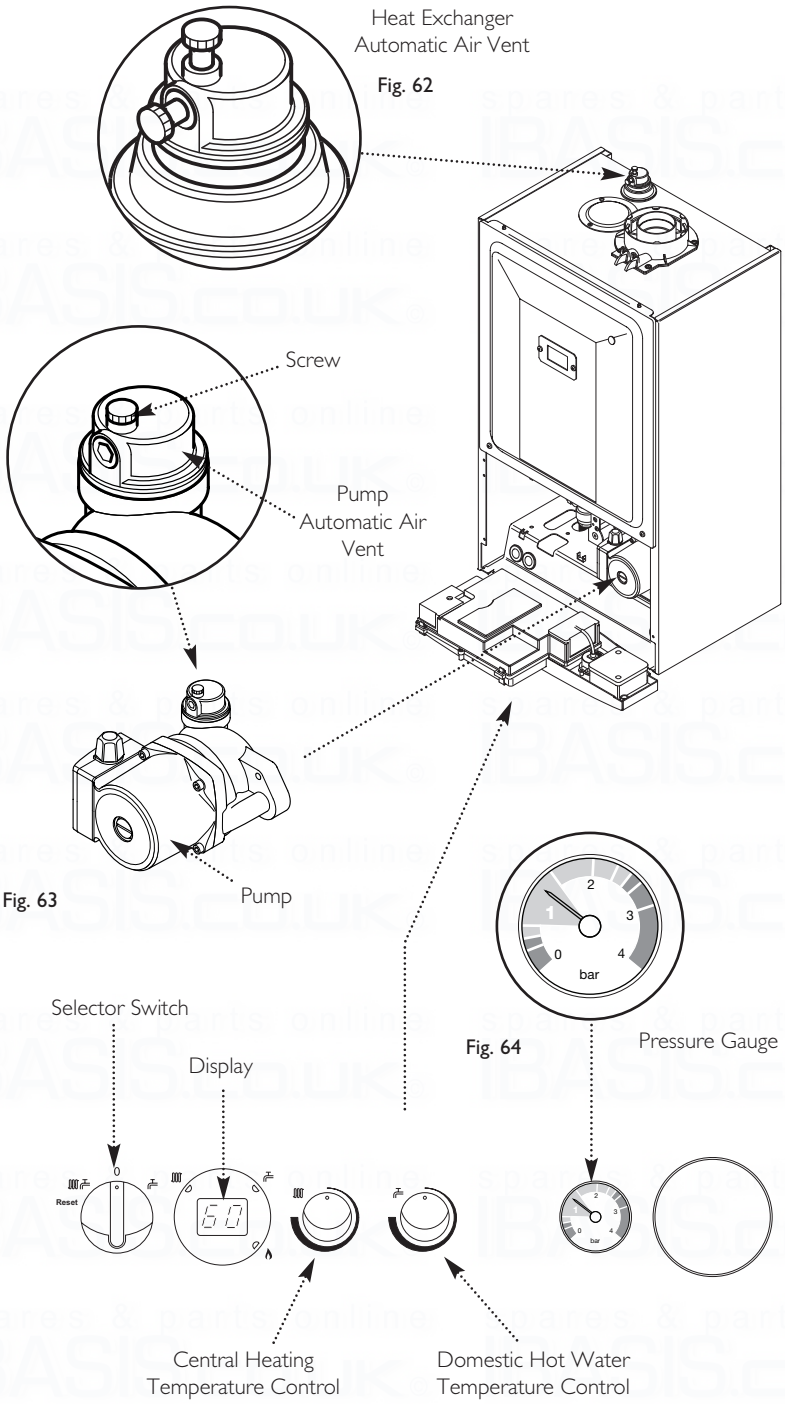

Fig. 65

11.0 Commissioning

11.1 Commissioning the Boiler

1. Reference should be made to BS 5449 Section 5 when commissioning the boiler.

2. Open the mains water supply to the boiler.

> **IMPORTANT:** The heat exchanger air vent on top of the boiler (Fig. 62) **MUST** be opened before filling the primary system.

3. Open all hot water taps to purge the DHW system.

4. Ensure that the filling loop is connected and open, then open the heating flow and return valves on the boiler.

5. Open the screw on the automatic air vent on the pump body (Fig. 63).

6. The system must be flushed in accordance with BS 7593 (see Section 6.2) and the flushing agent manufacturers instructions.

7. Pressurise the system to 1.5 bar (Fig. 64) then close and disconnect the filling loop.

8. Turn the gas supply on and purge according to in GB BS 6891 and in IE I.S. 813 "Domestic Gas Installations".

9. Test for gas soundness.

10. Hinge the facia panel upwards and refit the case front panel. Tighten the securing screws.

11. Turning either of the temperature control knobs will set the relevant temperature. When the knob is turned the display will alter and show the selected temperature. After a few seconds the display reverts to show the current boiler temperature (Fig. 65).

© Baxi Heating UK Ltd 2007

11.2 Checking

1. The gas valve is factory set and the burner pressure cannot be measured as it is altered by suction of the fan and modulates as demand on the boiler alters. The gas supply pressure should be 20mb.

2. If necessary the gas rate may be checked after running the boiler for 10 minutes with any other appliances and pilot lights turned off.

3. Ensure that the integral timer and any external controls are calling for heat, and the selector switch is in the central heating and hot water position ( ). The current boiler temperature is shown on the display.

4. To check the gas rate it is necessary to set the boiler to 'Calibration Mode'.

5. Turn both temperature control knobs fully anticlockwise, then quickly turn the DHW temperature knob 1/4 clockwise twice and back fully anticlockwise (Fig. 66).

6. The display will now alternate between 'SF' and the current boiler temperature and both green LEDs will flash (Figs. 67 & 68).

7. Turn CH temperature control knob fully clockwise. As the knob is turned the display will change from '0' to '00' (Fig. 69) indicating maximum rate, then revert to 'P' alternating with the current boiler temperature (Figs 70 & 71).

8. A gas rate measurement may now be made. Approximate values are:-

24 model	2.6m³/h
28 model	3.1m³/h
33 model	3.6 m³/h

9. The 'Calibration Function' is active for 20 minutes unless the maximum CH temperature is exceeded.

10. The function can be disabled at any time by turning the DHW temperature knob.

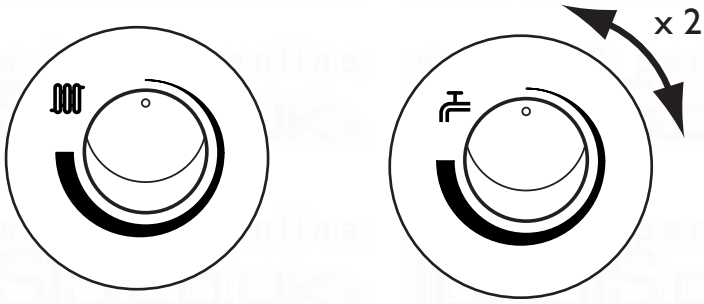

Fig. 66

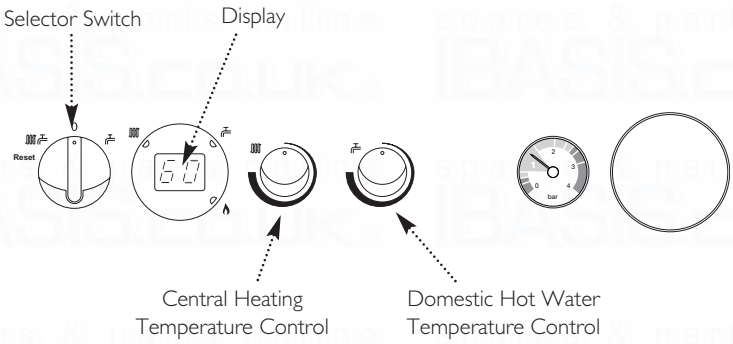

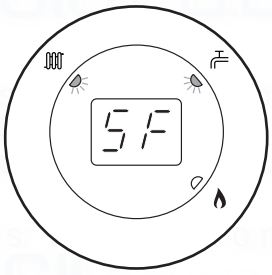

Fig. 67

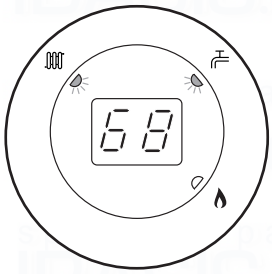

Fig. 68

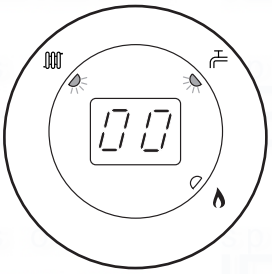

Fig. 69

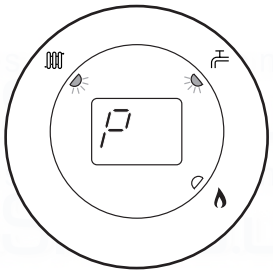

Fig. 70

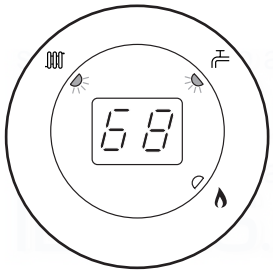

Fig. 71

 © Baxi Heating UK Ltd 2007

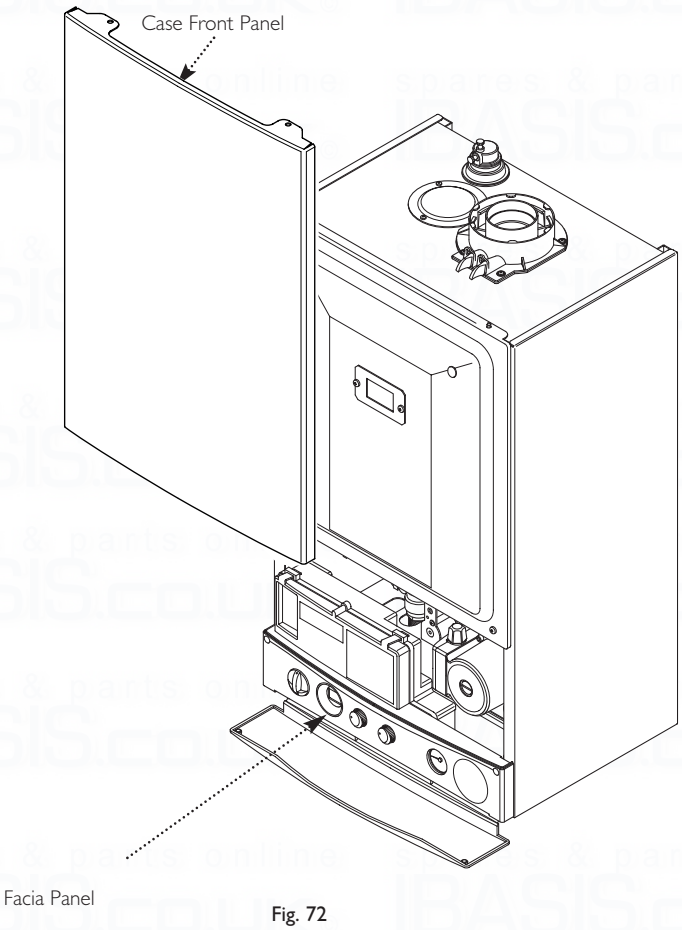

Fig. 72

12.1 Completion

1. Instruct the user in the operation of the boiler and system explaining the operational sequence.

2. Set the central heating and hot water temperature control knobs to the requirements of the user.

3. Carefully read and complete all sections of the Benchmark Commissioning Checklist at the rear of this publication that are relevant to the appliance and installation. These details will be required in the event of any warranty work. The publication must be handed to the user for safe keeping and each subsequent regular service visit recorded.

4. For IE, it is necessary to complete a "Declaration of Conformity" to indicate compliance with I.S. 813. An example of this is given in I.S. 813 "Domestic Gas Installations". This is in addition to the Benchmark Commissioning Checklist.

5. Hand over the Users Operating, Installation and Servicing Instructions giving advice on the necessity of regular servicing.

© Baxi Heating UK Ltd 2007

13.1 Annual Servicing

1. For reasons of safety and economy, it is recommended that the boiler is serviced annually.
Servicing must be performed by a competent person.

> If a combustion analyser is available the CO_2 can be checked and adjusted - see Section 15.0.
> If the reading is acceptable, and a visual inspection of the appliance is satisfactory, it is not necessary to perform a full strip - down.

2. After servicing, complete the relevant Service Interval Record section of the Benchmark Commissioning Checklist at the rear of this publication.

3. Ensure that the boiler is cool.

4. Ensure that both the gas and electrical supplies to the boiler are isolated.

5. Slacken the screws securing the facia panel. Lift the outercase panel so that its securing tabs are clear of the facia. Remove the panel, allowing the facia to hinge down (Fig. 73).

6. Remove the screws securing the inner door panel. Lift the panel slightly to disengage it from the studs on top of the case (Fig. 74).

7. Unscrew the sump from the bottom of the condensate trap assembly (Fig. 75).

8. Remove any deposits from the sump and trap. Clean as necessary and replace the sump.

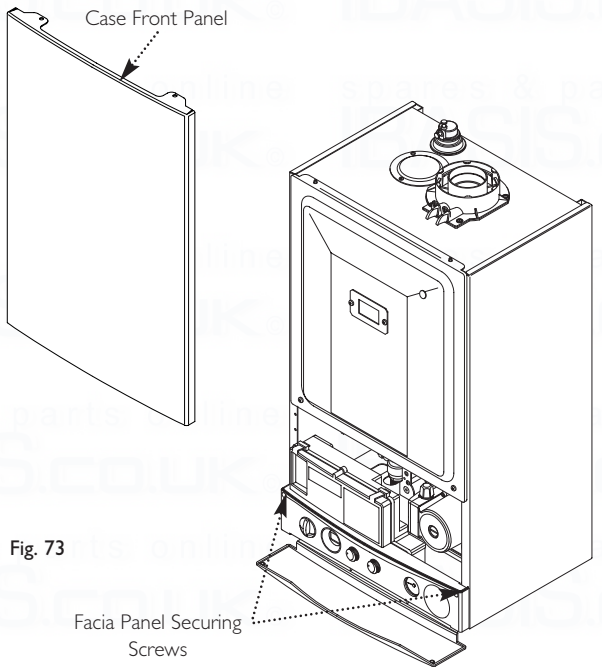

Fig. 73

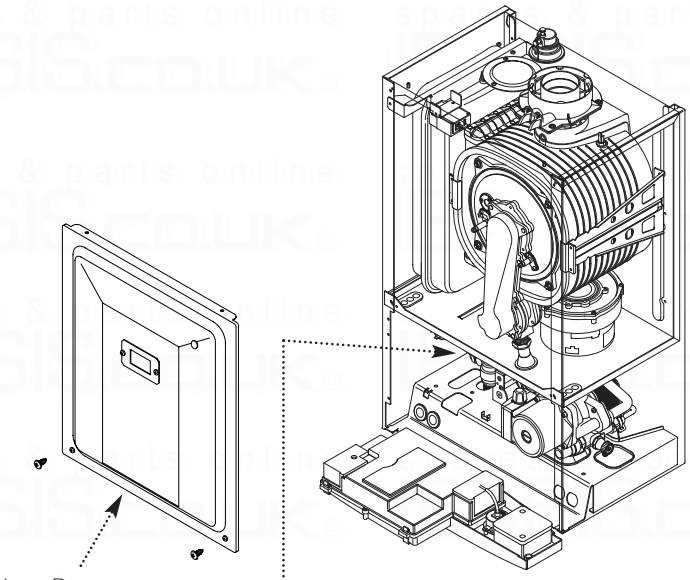

Fig. 74

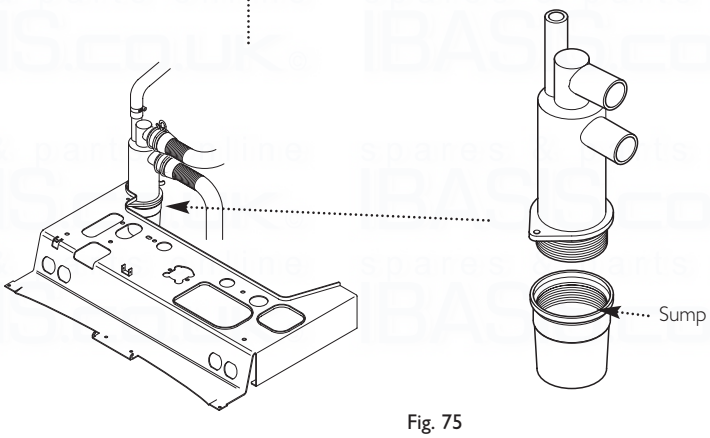

Fig. 75

 © Baxi Heating UK Ltd 2007

13.1 Annual Servicing (Cont)

9. Undo the nut on the gas inlet pipe to the venturi (Fig. 77) and pull the sensing pipe off the fan.

10. Disconnect the electrode leads, noting their position, and the fan electrical plugs.

11. Undo the four nuts retaining the combustion box cover to the heat exchanger.

12. Carefully draw the fan, collector and cover assembly forward, being careful to retain the injector in the venturi (Figs. 76 & 77).

13. Clean any debris from the heat exchanger and check that the gaps between the tubes are clear.

14. Inspect the burner, electrodes and insulation, cleaning or replacing if necessary. Clean any dirt or dust from the air box.

15. Reassemble in reverse order.

NOTE: The sensing pipe must be reconnected to the fan, not the venturi.

DHW Filter (Fig. 79)

16. If the flow of domestic hot water is diminished, it may be necessary to clean the filter.

17. Initially check the cold water inlet tap filter.

18. Turn the tap off and draw off from a hot tap. Undo the blanking cap and remove the threaded bush (Fig. 78).

19. Extract the filter and rinse thoroughly in clean water. Reassemble and check the flow. If required clean the restricter filter as described below.

20. Pull off the Hall Effect sensor. Undo the restricter from the inlet/return manifold (Fig. 79).

21. Rinse the filter thoroughly in clean water and reassemble in reverse order.

22. Turn the selector switch fully anticlockwise against the spring pressure to the reset position and hold for 5 seconds to reset the boiler.

23. Complete the relevant Service Interval Record section of the Benchmark Commissioning Checklist at the rear of this publication and then hand it back to the user.

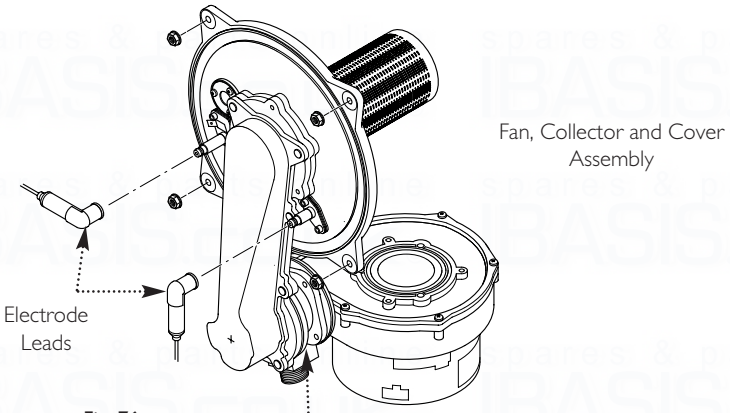

Fig. 76

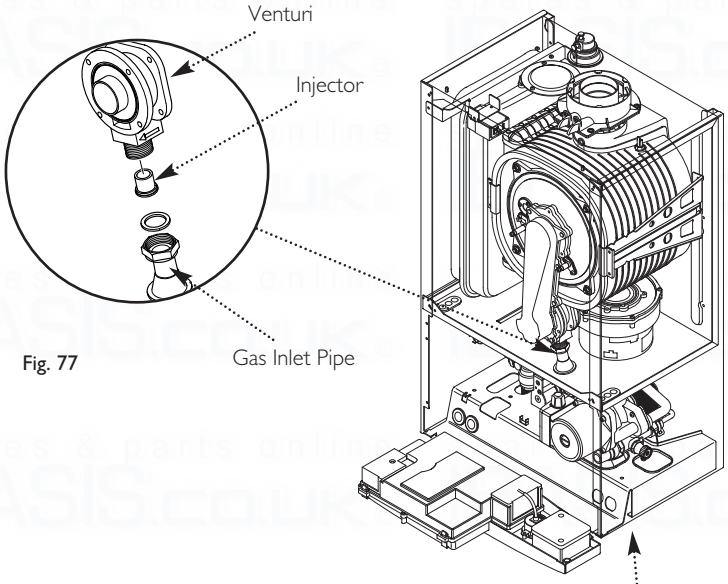

Fig. 77

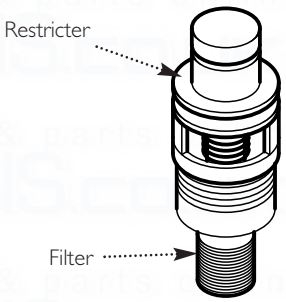

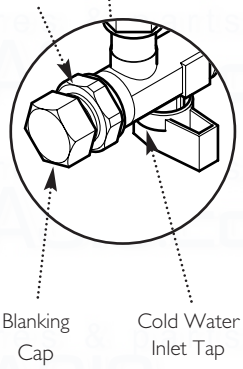

Fig. 78

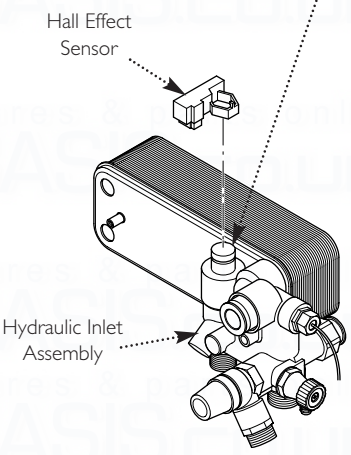

Fig. 79

© Baxi Heating UK Ltd 2007

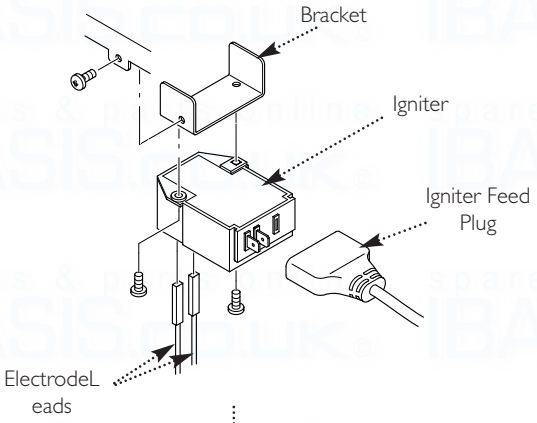

Fig. 80

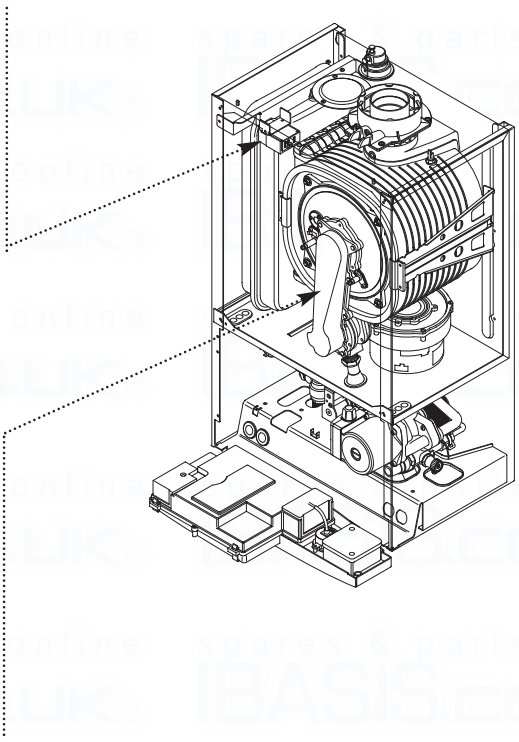

IMPORTANT: When changing components ensure that both the gas and electrical supplies to the boiler are isolated before any work is started. When the component has been changed turn the selector switch fully anticlockwise against the spring pressure to the reset position and hold for 5 seconds to reset the boiler before recommissioning.

See Section 13.1 "Annual Servicing" for removal of case panel, door etc.

14.1 Igniter (Fig. 80)

1. Disconnect the igniter feed plug and the electrode leads, noting their positions.

2. Undo the screw securing the bracket to the boiler.

3. Remove the igniter and transfer the bracket to the new component.

4. Reassemble in reverse order.

14.2 Spark and Sensing Electrodes (Fig. 81)

1. Disconnect the electrode leads, noting their positions.

2. Remove the retaing screws securing each of the electrodes to the combustion box cover and remove the electrodes.

3. Check the condition of the sealing gasket and replace if necessary. Reassemble in reverse order.

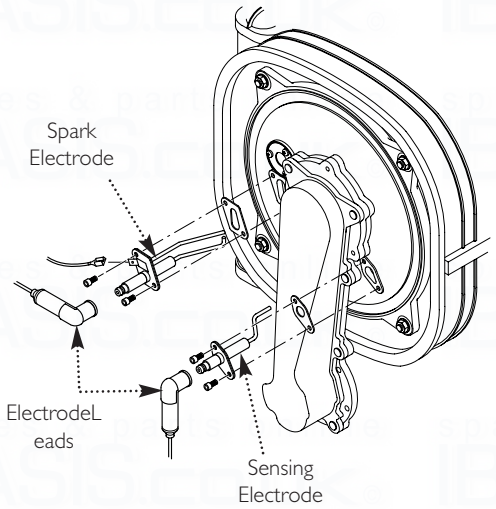

Fig. 81

 © Baxi Heating UK Ltd 2007

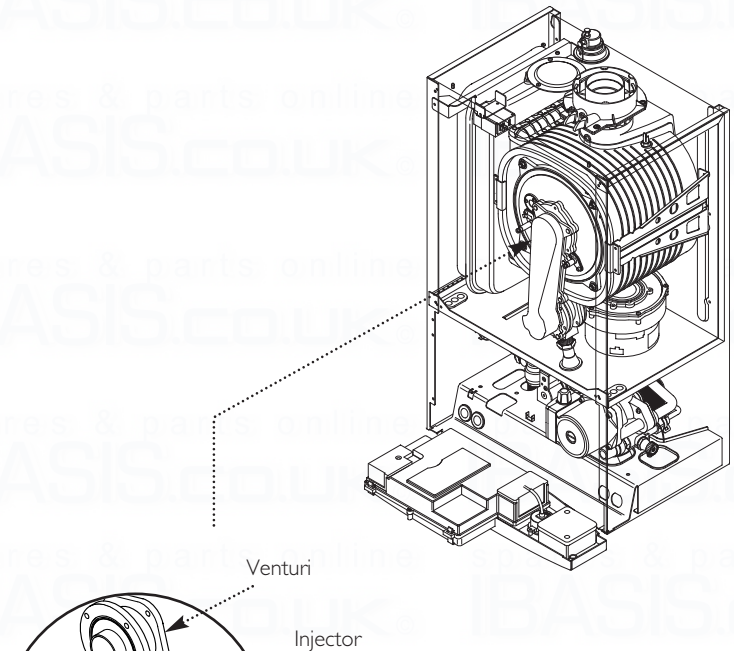

Fig. 83

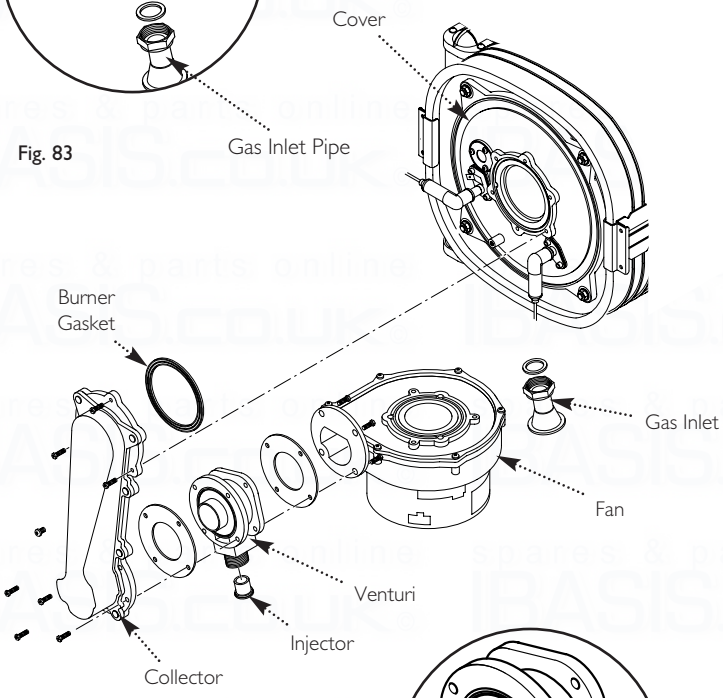

Fig. 82

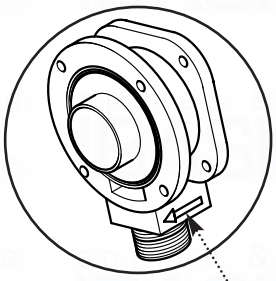

Fig. 84

When fitting the venturi ensure that the arrow is pointing forward

14.3 Fan (Fig. 83)

1. Undo the nut on the gas inlet pipe to the venturi (Fig. 62) and pull the sensing pipe off the fan.

2. Disconnect the electrode leads, noting their position and disconnect the fan electrical plugs.

3. Undo the screws securing the collector to the cover (33 models) or extension piece (28 models).

4. Remove the collector and fan assembly, being careful to retain the injector in the venturi.

5. Undo the screws securing the fan to the venturi and fit the new fan, replacing the seal if necessary.

6. Examine the burner gasket and replace if necessary.

7. Reassemble in reverse order, ensuring that the injector is in place and the sensing pipe is connected to the fan.

14.4 Venturi (Fig. 82)

1. Remove the collector and fan assembly as described in section 14.3.

2. Extract the injector from the venturi.

3. Undo the screws securing the fan to the venturi and the venturi to the collector.

Important: When fitting the new venturi, ensure the arrows on it's base point into the collector (Fig. 84).

4. Examine the seals and burner gasket, replace if necessary.

5. Reassemble in reverse order, ensuring that the injector is in place.

14.5 Injector (Fig. 82)

1. Remove the collector and fan assembly as described in section 14.3.

2. Extract and replace the injector and reassemble in reverse order.

© Baxi Heating UK Ltd 2007

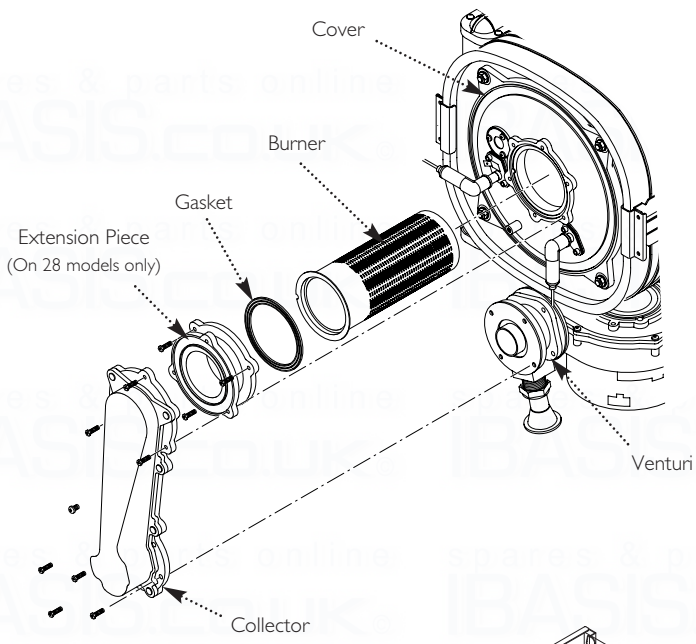

Fig. 85

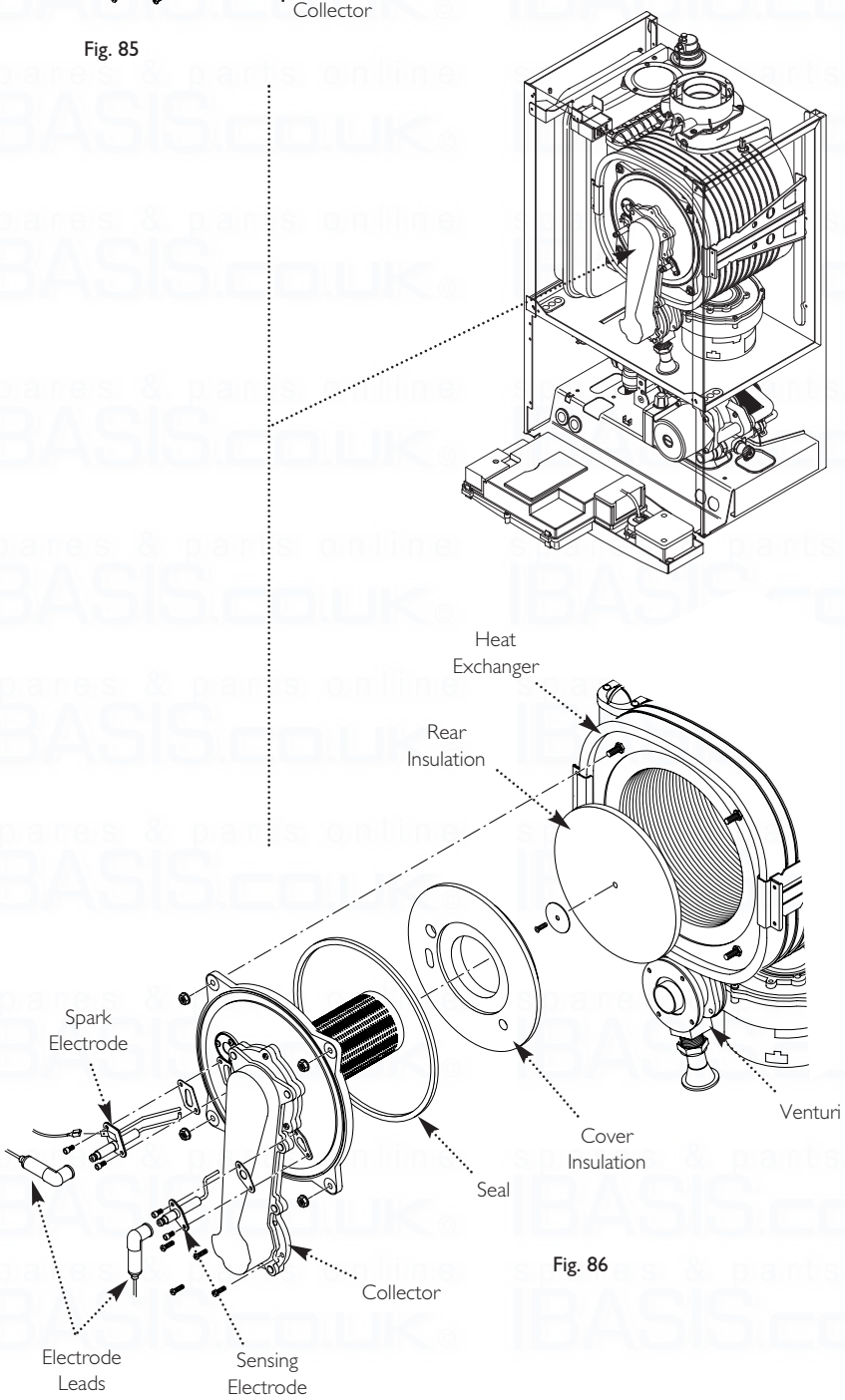

Fig. 86

14.6 Burner (Fig. 85)

1. Undo the screws securing the collector to the cover and venturi (On 28 models there is an extension piece fitted to the cover, remove this also.

2. Withdraw the burner from the cover and replace with the new one.

3. Examine the gasket, replacing if necessary.

4. Reassemble in reverse order.

14.7 Insulation (Fig. 86)

1. Remove the electrode leads, noting their positions. Also remove the electrodes as described in section 14.2.

2. Undo the screws securing the collector to the venturi and the nuts holding the cover to the heat exchanger. Draw the collector and cover assembly away.

3. Remove the cover insulation piece.

4. Fit the new insulation carefully over the burner and align it with the slots for the electrodes.

5. The rear insulation is retained by a screw and large washer, remove these and draw the insulation out of the heat exchanger.

6. Examine the cover seal and replace if necessary.

 © Baxi Heating UK Ltd 2007

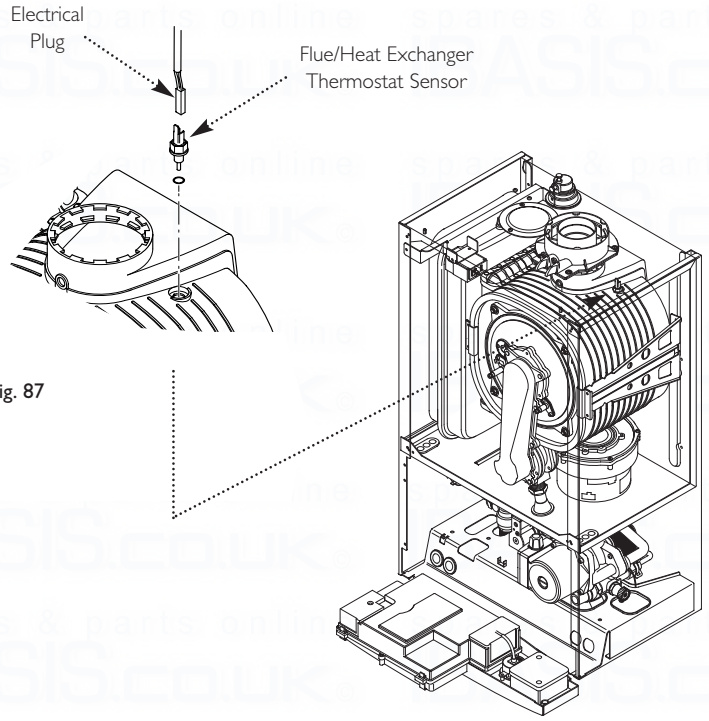

Fig. 87

14.8 Flue/Heat Exchanger Thermostat Sensor (Fig. 87)

1. Ease the retaining tab on the sensor away and disconnect the electrical plug.

2. Turn the sensor 90˚ anticlockwise to remove - it is a bayonet connection.

3. Reassemble in reverse order.

14.9 Water Pressure Sensor (Fig. 89)

1. Drain the primary circuit.

2. Disconnect the two wires from the sensor.

3. Undo the nut on the flow pipe securing and sealing the sensor.

4. Remove the sensor, examine the sealing washer, replacing if necessary.

5. Reassemble in reverse order. The component is not polarised - either wire will fit each terminal.

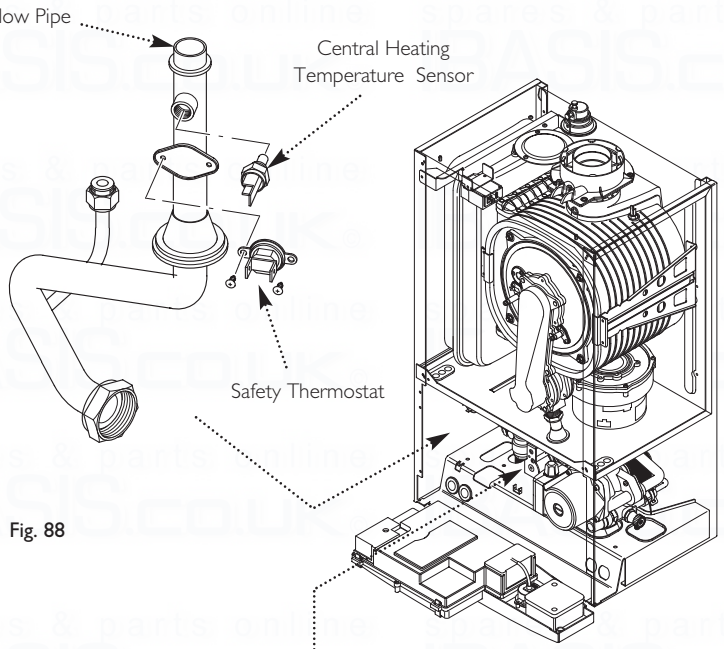

Fig. 88

14.10 Central Heating Temperature Sensor (NTC) (Fig. 88)

1. Ease the retaining tab on the sensor away and disconnect the electrical plug.

2. Unscrew the sensor from it's pocket and reassemble in reverse order. The plug will only fit one way.

14.11 Safety Thermostat (Fig. 88)

1. Pull the plug off the thermostat.

2. Remove the screws securing the thermostat to the mounting plate on the flow pipe.

3. Reassemble in reverse order, ensuring that the plug is pushed fully on.

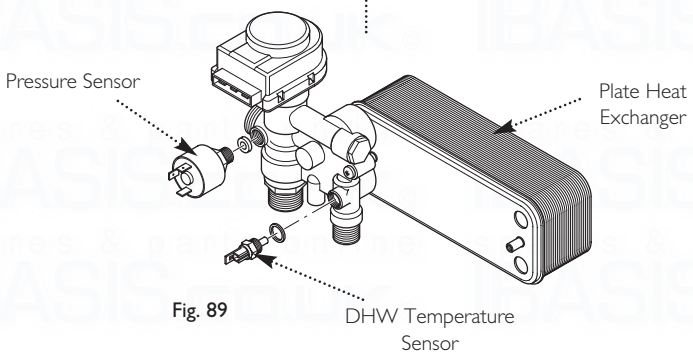

Fig. 89

14.12 DHW Temperature Sensor (NTC) (Fig. 89)

1. Turn off the mains cold water supply tap and draw off the residual domestic hot water.

2. Ease the retaining tab on the sensor away and disconnect the electrical plug.

3. Unscrew the sensor from the plate heat exchanger manifold. Examine the sealing washer,replacing if necessary.

4. Reassemble in reverse order. The plug will only fit one way.

© Baxi Heating UK Ltd 2007

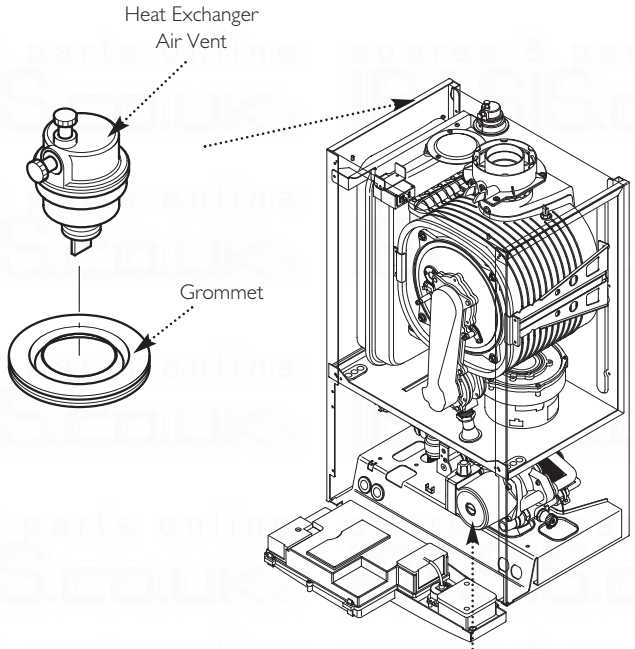

Fig. 90

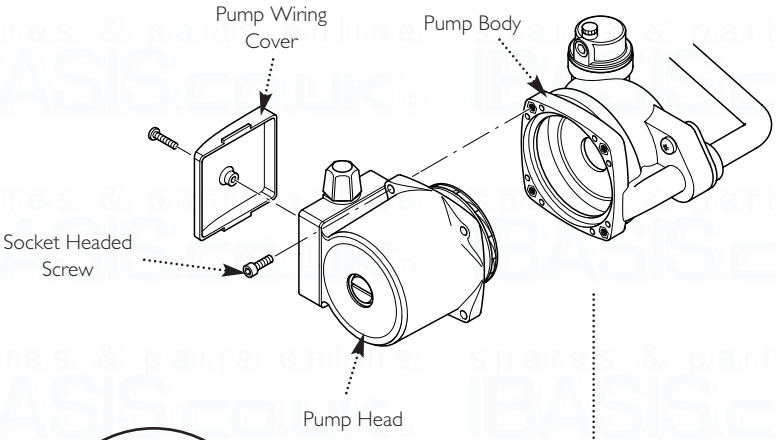

Fig. 91

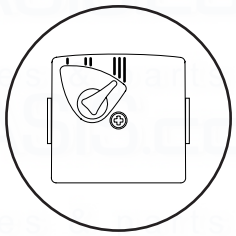

Fig. 92

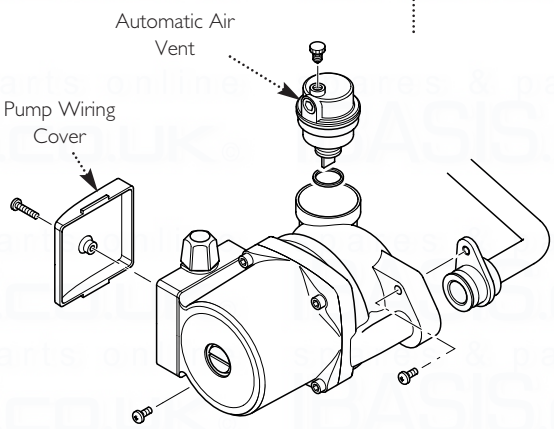

Fig. 93

14.11 Heat Exchanger Automatic Air Vent (Fig. 90)

1. Drain the boiler primary circuit and unscrew the automatic air vent from the pump body.

2. Examine the 'O' ring seal, replacing if necessary, and fit it to the new automatic air vent.

3. Reassemble in reverse order, transferring the grommet to the new vent.

4. Ensure that the grommet is is sealed correctly to the boiler top panel.

14.12 Pump - Head Only (Fig. 91)

1. Drain the boiler primary circuit and remove the socket head screws securing the pump head to the body and draw the head away.

2. Undo the screw on the pump wiring cover and remove the cover. Using a suitable flat bladed screw driver press the cable securing levers downwards to release each wire after noting their position.

3. A standard replacement Grundfos 15-60 head can now be fitted. Connect the pump wiring to the new head. **The pump speed must be set to 3** (Fig. 92).

4. Reassemble in reverse order.

14.13 Pump - Complete (Fig. 93)

1. Drain the boiler primary circuit.

2. Undo the two screws securing the body to the pipe and manifold and draw the pump forwards.

3. Undo the screw on the pump wiring cover and remove the cover. Using a suitable flat bladed screw driver press the cable securing levers downwards to release each wire after noting their position.

4. Unscrew the automatic air vent from the pump body.

5. Connect the wiring to the new pump. Examine the 'O' ring seals on the return pipe and manifold, replacing if necessary.

6. Fit the air vent to the pump body and reassemble in reverse order.

14.14 Automatic Air Vent (Fig. 93)

1. Drain the boiler primary circuit and unscrew the automatic air vent from the pump body.

2. Examine the 'O' ring seal, replacing if necessary, and fit it to the new automatic air vent.

3. Reassemble in reverse order.

 © Baxi Heating UK Ltd 2007

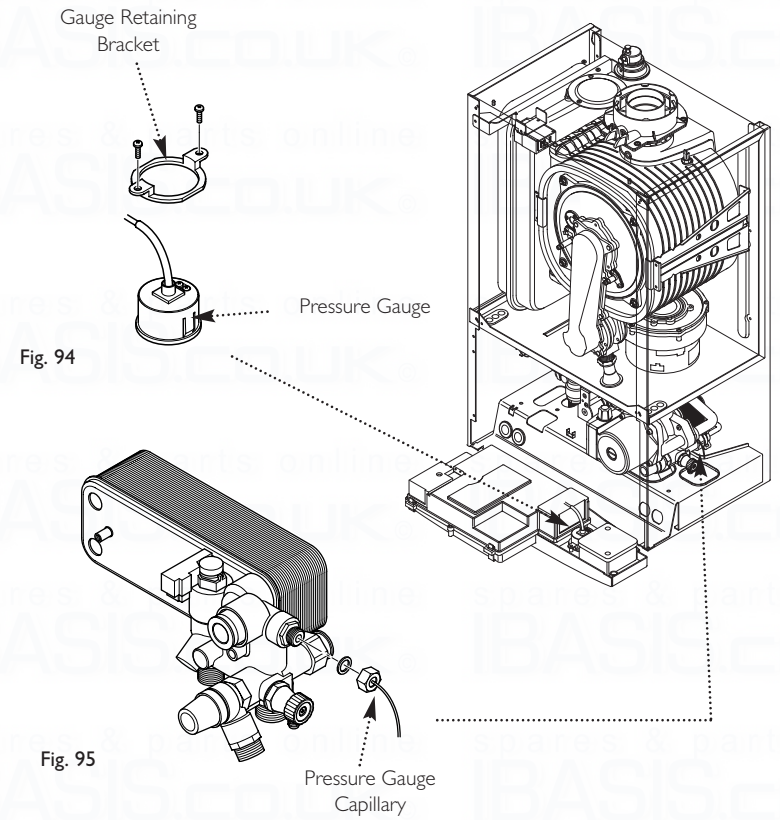

Fig. 94

Fig. 95

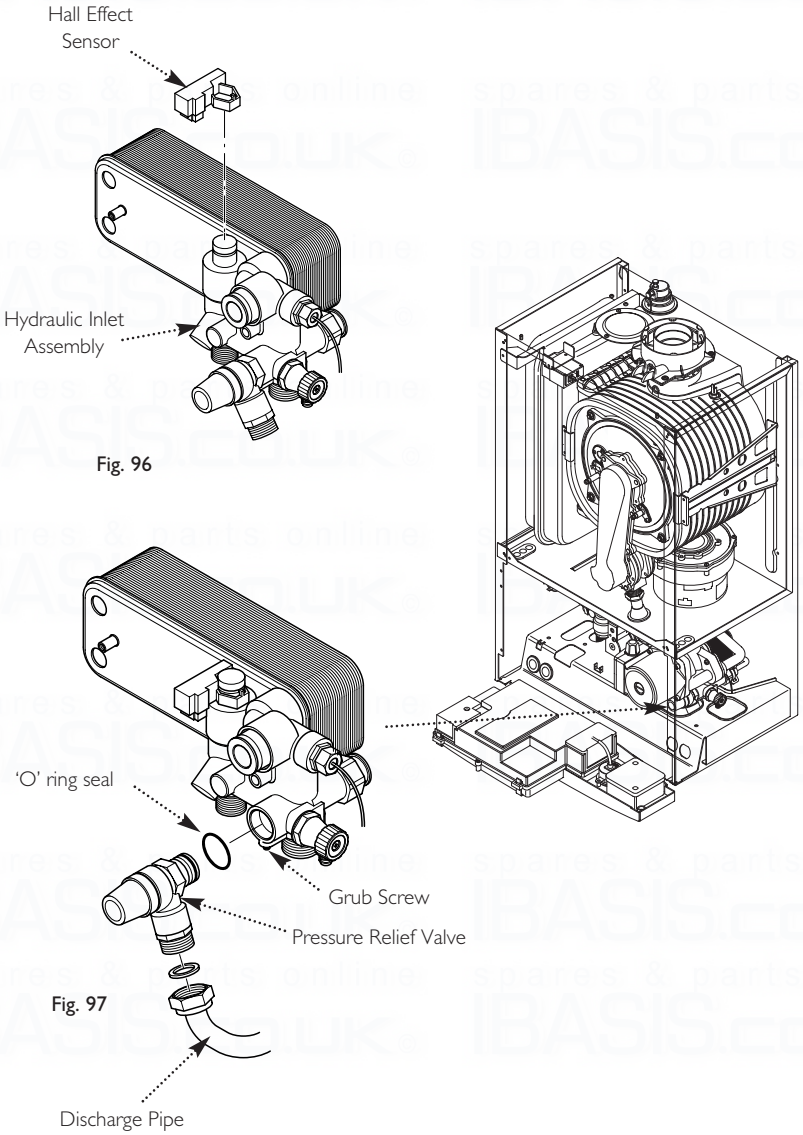

Fig. 96

Fig. 97

14.15 Pressure Gauge (Figs. 94 & 95)

1. Drain the boiler primary circuit and undo the nut on the pressure gauge capillary.

2. Undo the screws securing the gauge retaining bracket.

3. Remove the bracket and gauge assembly. Depress the barbs on the side of the gauge and remove the retaining bracket.

4. Examine the sealing washer, replace if necessary.

5. Reassemble in reverse order.

14.16 Hall Effect Sensor (Fig. 96)

1. Ease the sensor upwards off the hydraulic inlet manifold assembly.

2. Disconnect the electrical plug from the sensor.

3. Connect the plug to the new sensor. Carefully fit the new sensor to the hydraulic assembly, ensuring it is fully down.

14.17 Pressure Relief Valve (Fig. 97)

1. Drain the boiler primary circuit.

2. Disconnect the discharge pipe from the valve. Using a suitable hexagon key undo the grub screw sufficiently to release the valve.

3. Note the orientation of the valve, rotate it and withdraw it from the manifold.

4. Fit the new valve and 'O' ring seal and set to the previously noted orientation. Reassemble in reverse order.

© Baxi Heating UK Ltd 2007

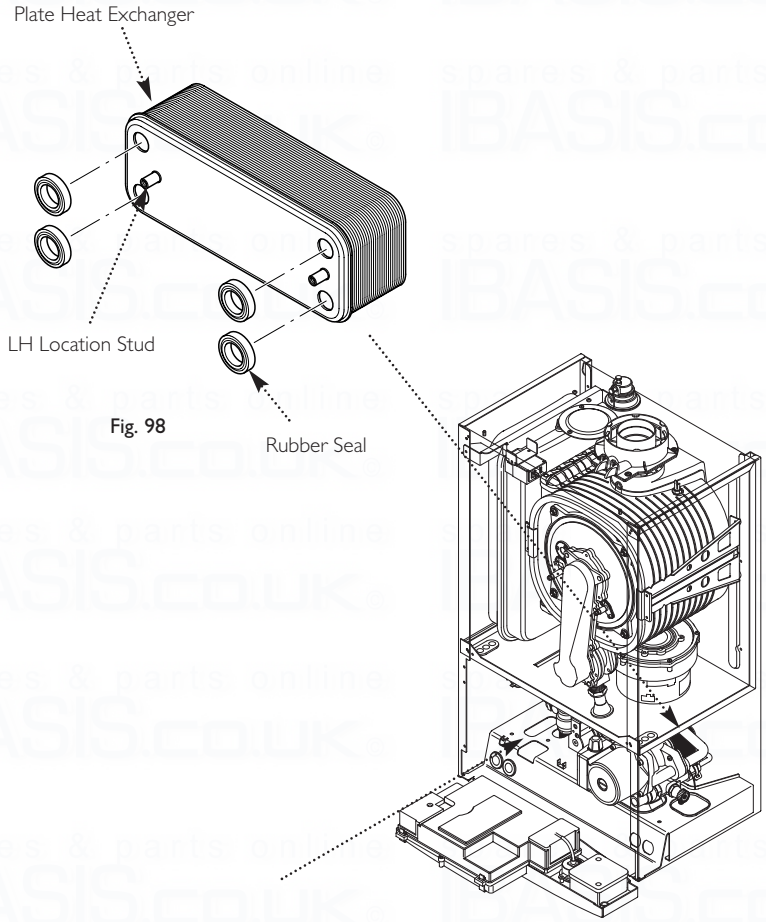

Fig. 98

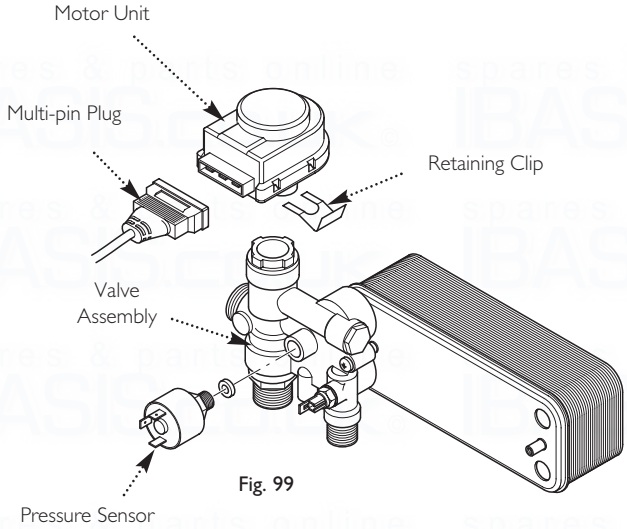

Fig. 99

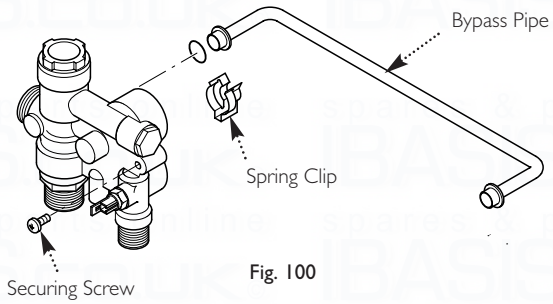

Fig. 100

14.18 Plate Heat Exchanger (Fig. 98)

1. Drain the boiler primary circuit and remove the gas valve as described in section 13.22.

2. While supporting the heat exchanger undo the screws securing it to the brass manifolds.

3. Withdraw the heat exchanger upwards, taking care not to damage any wires or controls.

Seals

4. There are four rubber seals between the manifolds and heat exchanger which may need replacement.

5. Ease the seals out of the manifold. Replace carefully, ensuring that when the seal is inserted into the manifold it is parallel and pushed fully in.

6. When fitting the new heat exchanger note that the left hand location stud is offset towards the centre more than the right hand one.

7. Reassemble in reverse order.

14.19 Diverter Valve - Motor Unit & Assembly (Figs. 99 & 100)

1. To replace the motor unit, disconnect the multi-pin plug.

2. Pull off the retaining clip and remove the motor unit.

3. The motor unit can now be replaced, or the valve assembly removed.

4. Drain the primary circuit and draw off any hot water once the isolating taps are closed.

5. Remove the spring clip retaining the bypass pipe to the rear of the assembly and under the flow pipe nut at the left hand side.

6. Undo the nuts on the tap rail under the boiler. Remove the screws securing the valve assembly to the boiler bottom panel and plate heat exchanger.

7. Remove the valve assembly. Examine any seals or washers, replacing if necessary. Transfer the DHW NTC to the new valve and reassemble in reverse order.

 © Baxi Heating UK Ltd 2007

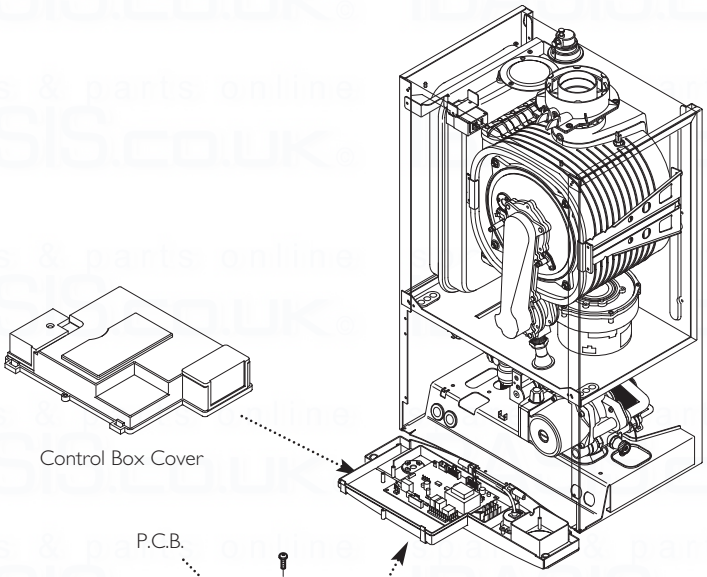

Fig. 101

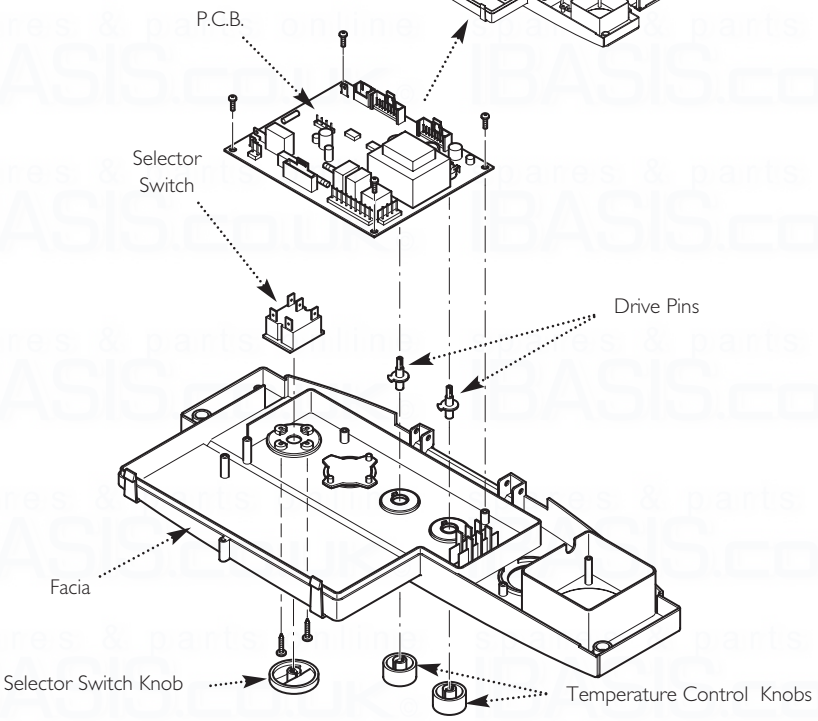

Fig. 102

14.20 P.C.B. (Fig. 102)

1. Note the settings of the temperature control knobs, rotate them fully anticlockwise and carefully pull them off the drive pins.

2. Completely undo the screws securing the control box cover and release the cover retaining barbs from their slots. Disengage the rear of the cover from the control box hinge pin (Fig. 101).

3. Note the position of all plugs and wires on the P.C.B. and disconnect them.

4. Undo the securing screws and remove the P.C.B. Transfer the control knob drive pins to the new P.C.B. and turn them fully anticlockwise.

5. Reassemble in reverse order, ensuring that the temperature controllers are reset to their previous positions.

14.21 Selector Switch (Fig. 102)

1. Note the setting of the selector switch knob and carefully pull it off the facia.

2. Completely undo the screws securing the control box cover and release the cover retaining barbs from their slots. Disengage the rear of the cover from the control box hinge pin (Fig. 101).

3. Note the position of the electrical connections and the orientation of the switch. Remove the electrical connections.

4. Remove the screws securing the switch to the facia panel.

5. Fit the new switch, ensuring that it is correctly positioned and reassemble in reverse order.

© Baxi Heating UK Ltd 2007

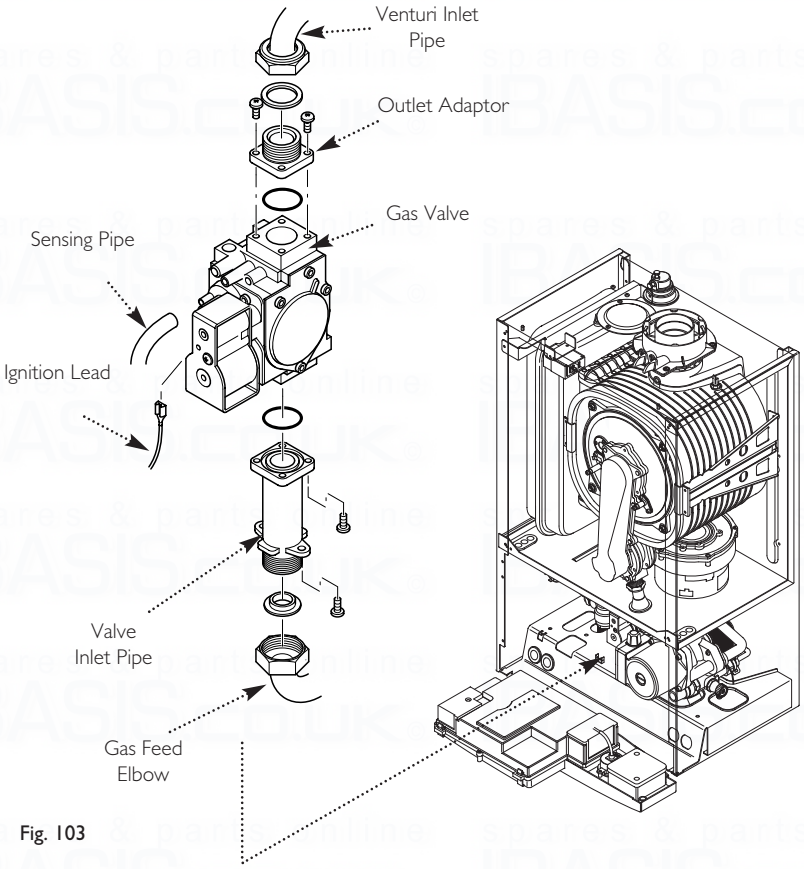

Fig. 103

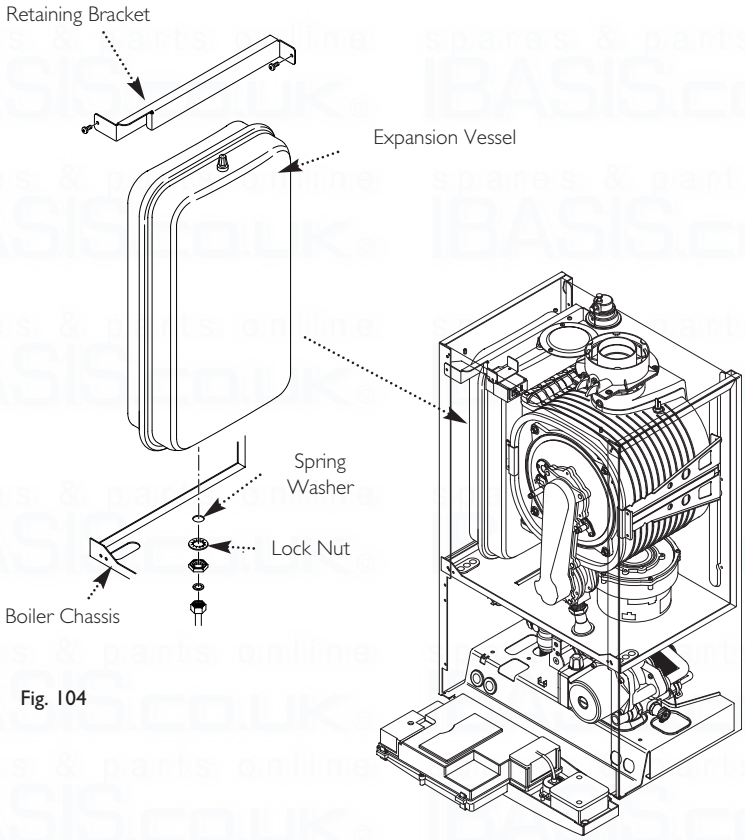

Fig. 104

14.22 Gas Valve (Fig. 103)

IMPORTANT: After replacing the valve the CO_2 must be checked and adjusted as detailed in Section 15.0 Combustion Check. Only change the valve if a suitable calibrated combustion analyser is available

1. Turn the gas cock off and undo the nut on the gas feed elbow under the boiler.

2. Remove the screws securing the inlet pipe flange to the boiler bottom panel.

3. Pull off the earth lead and sensing pipe.

4. Undo the nut on the gas pipe at the gas/air inlet and the gas valve. Remove the pipe, taking care not to lose the sealing washers. Remove the valve.

5. Remove the outlet adaptor and inlet pipe and transfer them to the new valve. Examine the 'O' ring seals, replace if necessary.

6. Reassemble in reverse order., ensuring that all seals are in place and the injector is fitted.

14.23 Expansion Vessel (Fig. 104)

1. Drain the boiler primary circuit and undo the nut on the vessel connection pipe.

2. Remove the screw retaining the air inlet pipe, and swing the pipe to one side.

3. Undo and remove the locknut and spring washer securing the vessel spigot to the boiler lower panel.

4. Remove the bracket and vessel from the boiler.

5. Locate the retaining bracket on the upper flange of the new vessel and fit to the boiler.

6. Examine the sealing washer, replacing if necessary, and reassemble in reverse order.

 © Baxi Heating UK Ltd 2007

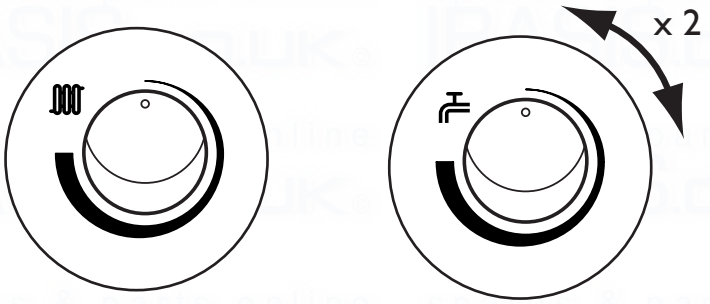

Central Heating Temperature Control

Fig. 105

Domestic Hot Water Temperature Control

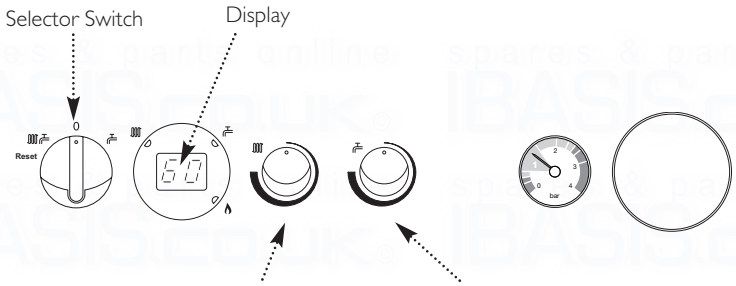

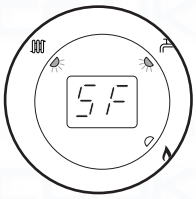

Fig. 106

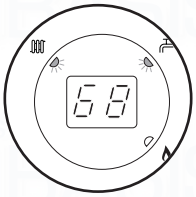

Fig. 107

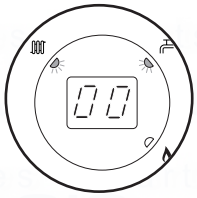

Fig. 108

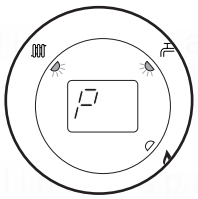

Fig. 109

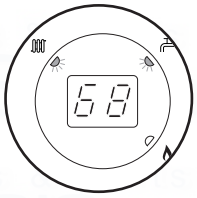

Fig. 110

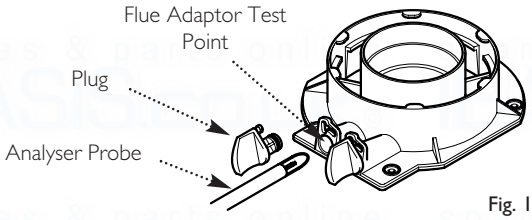

Fig. 111

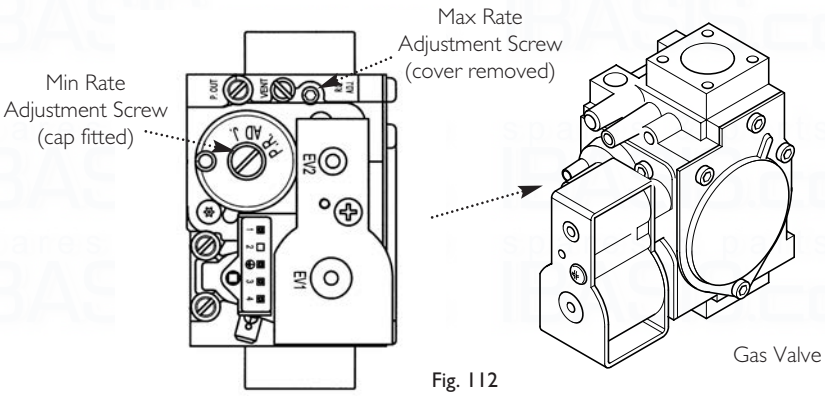

Fig. 112

15.1 Checking the CO_2

IMPORTANT: The CO_2 must only be checked and adjusted if a suiutable calibrated combustion analyser is available.

1. The combustion (CO_2) may be checked using a suitably calibrated analyser after running the boiler for several minutes.

2. To do this it is necessary to set the boiler to 'Calibration Mode'.

3. Ensure that all external controls are calling for heat. The actual current boiler temperature is shown on the display.

4. Turn both temperature control knobs fully anticlockwise, then quickly turn the DHW temperature knob 1/4 clockwise twice and back fully anticlockwise (Fig. 105).

5. The display will now alternate between 'SF' and the current boiler temperature and both green LEDs will flash (Figs. 106 & 107).

6. Turn the CH temperature knob fully clockwise. As the knob is turned the display will change, indicating the fan speed.

7. The display will show '00', indicating maximum rate, then revert to 'P ' alternating with the current boiler temperature (Figs 108, 109 & 110).

8. Remove the plug from the flue adaptor test point. Insert the analyser probe and allow time for the reading to settle (Fig. 111).

The CO_2 should be 8.7% ± 0.2

9. It is possible to alter the CO_2 by adjustment of the gas valve. Remove the plastic cover from the 'Max Rate' adjustment screw. At maximum rate the 'Max. Rate' adjustment screw should be turned, using a suitable hexagon key, until the correct reading is obtained (Fig. 112). Turning clockwise will reduce the CO_2. Anticlockwise will increase the CO_2.

10. The CO_2 must then be checked at minimum rate. Turn the CH temperature knob fully anticlockwise. As the knob is turned the display will change, indicating the fan speed. When the display reads ' 0' the boiler runs at minimum rate.

The CO_2 should be 8.4% ± 0.2.

11. With the boiler on minimum, the 'Min. Rate' adjustment screw must be altered, using a suitable hexagon key, after removing the cap (Fig. 112). If the CO_2 is reset at either boiler rate it must be rechecked at the other rate and also adjusted if required.

12. The 'Calibration Function' is maintained for 20 minutes unless the maximum CH temperature is exceeded. The function can be disabled at any time by turning the DHW knob.

© Baxi Heating UK Ltd 2007

16.1 Illustrated Wiring Diagram

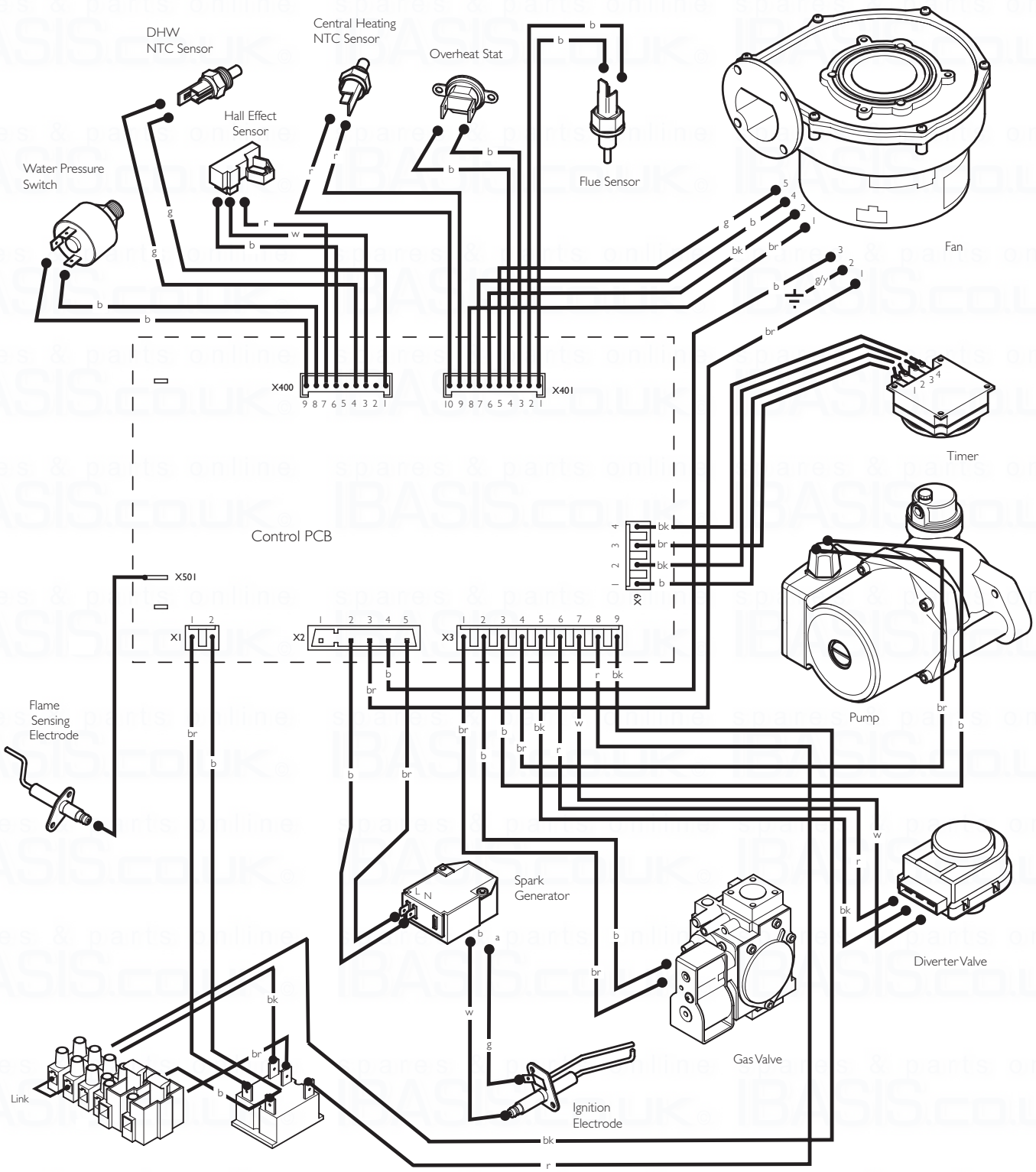

br	- brown	g	- green
bk	- black	g/y	- green / yellow
b	- blue	r	- red
w	- white		

 © Baxi Heating UK Ltd 2007

17.0 Short Parts List

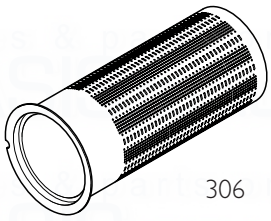
306

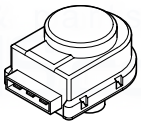
426

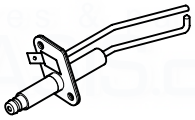
315

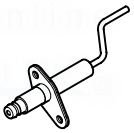
316

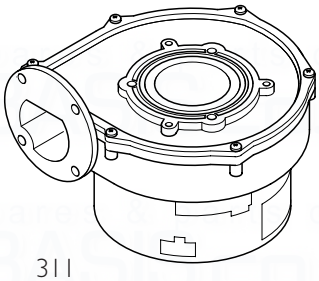
311

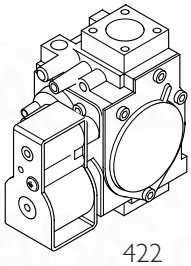
422

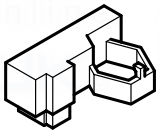
624

419

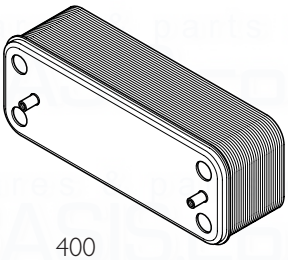
400

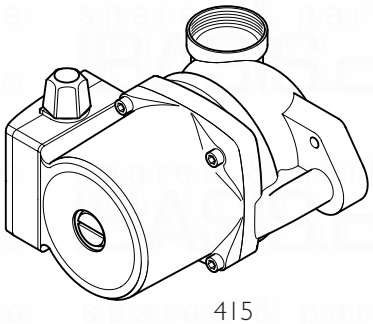
415

302

421

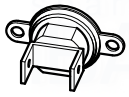
420

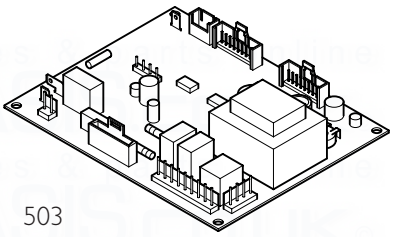
503

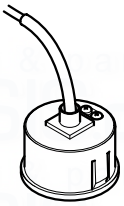
504

Short Parts List

Key No.	Description	Manufacturers Part No.
326	Fan	5121447
426	Motor 3way Valve	248733
315	Igniter Electrode	5114702
316	Sensing Electrode	5114703
422	Gas Valve	5114734
404	Hall Effect Sensor	5114767
313	Burner 24	5122149
	Burner 28	5114697
	Burner 33	5114698
419	Water Pressure Switch	5114748
400	Plate Heat Exchanger 24	248048
	Plate Heat Exchanger 28/33	5114708
415	Pump	248042
421	NTC Sensor	5114725
420	Overheat Thermostat	5114729
504	Pressure Gauge	248090
503	PCB 24	5121862
	PCB 28	5120218
	PCB 33	5120219

© Baxi Heating UK Ltd 2007

18.0 Fault Finding

18.1 Initial Fault Finding Checks

1. Check that gas, water and electrical supplies are available at the boiler.

2. Electrical supply = 230V ~ 50 Hz.

3. CH water system pressurised to 0.5 bar minimum when the boiler is cold.

4. The preferred minimum gas pressure is 20 mbar.

5. Carry out electrical system checks, i.e. Earth Continuity, Resistance to Earth, Short Circuit and Polarity with a suitable meter.

NOTE: These checks must be repeated after any servicing or fault finding.

6. Ensure all external controls are calling for heat and check all external and internal fuses. Before any servicing or replacement of parts, ensure the gas and electrical supplies are isolated.

18.2 Error Codes

1. If a fault occurs on the boiler an error code may be shown by the facia display.

2. The codes are either two or three digit, preceded by the letter 'E'. For example, code E133 will be displayed by 'E1' alternating with '33'. E50 is shown as 'E' then '50'

E20, E28 & E50 indicate faulty or incorrect components.

E110 shows overheat of the primary water and E130 overheat of the flue system.

E119 is displayed when the primary water pressure is less than 0.5 bar.

E133 indicates that the gas supply has been interrupted, ignition has failed or the flame has not been detected.

E125 is displayed in either of two situations:-
i) If within 15 seconds of the burner lighting the boiler temperature has not changed by 1°.
ii) If within 10 minutes of the burner lighting the boiler temperature twice exceeds the selected temperature by 30°.
In these instances poor primary circulation is indicated.

3. By turning the selector switch to the 'Reset' position for a minimum of 5 seconds when E110, E130 & E133 are displayed it is possible to relight the boiler.

4. If this does not have any effect, or the codes are displayed regularly further investigation is required.

NOTE: When instructed to turn the selector to the reset position turn the selector switch fully anticlockwise against the spring pressure to the reset position and hold for 5 seconds to reset the boiler.

Table Of Error Codes

E20	Central Heating NTC Fault
E28	Incorrect PCB Fitted
E50	Hot Water NTC Fault
E110	Safety Thermostat Operated
E119	Water Pressure Switch Not Operated
E125	Circulation Fault (Primary Circuit)
E130	Flue NTC Operated
E133	Interruption Of Gas Supply or Flame Failure
E160	Fan or Fan Wiring Fault
E193	Pre-Circulation Fault

 © Baxi Heating UK Ltd 2007

Refer to Section 16.0 "Illustrated Wiring Diagram" for position of terminals and components

Central Heating - Follow operational sequence

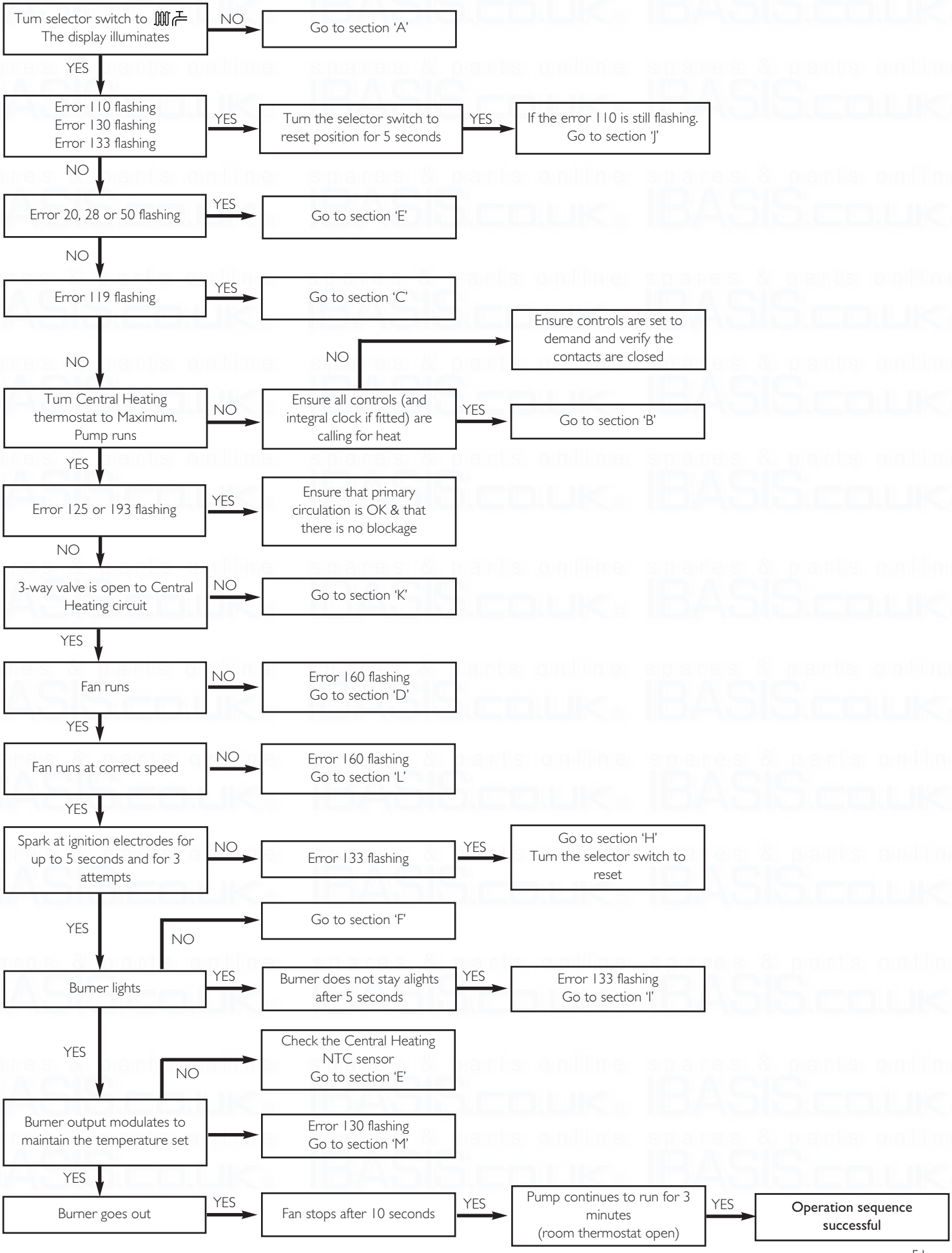

© Baxi Heating UK Ltd 2007

Domestic Hot Water - Follow operational sequence

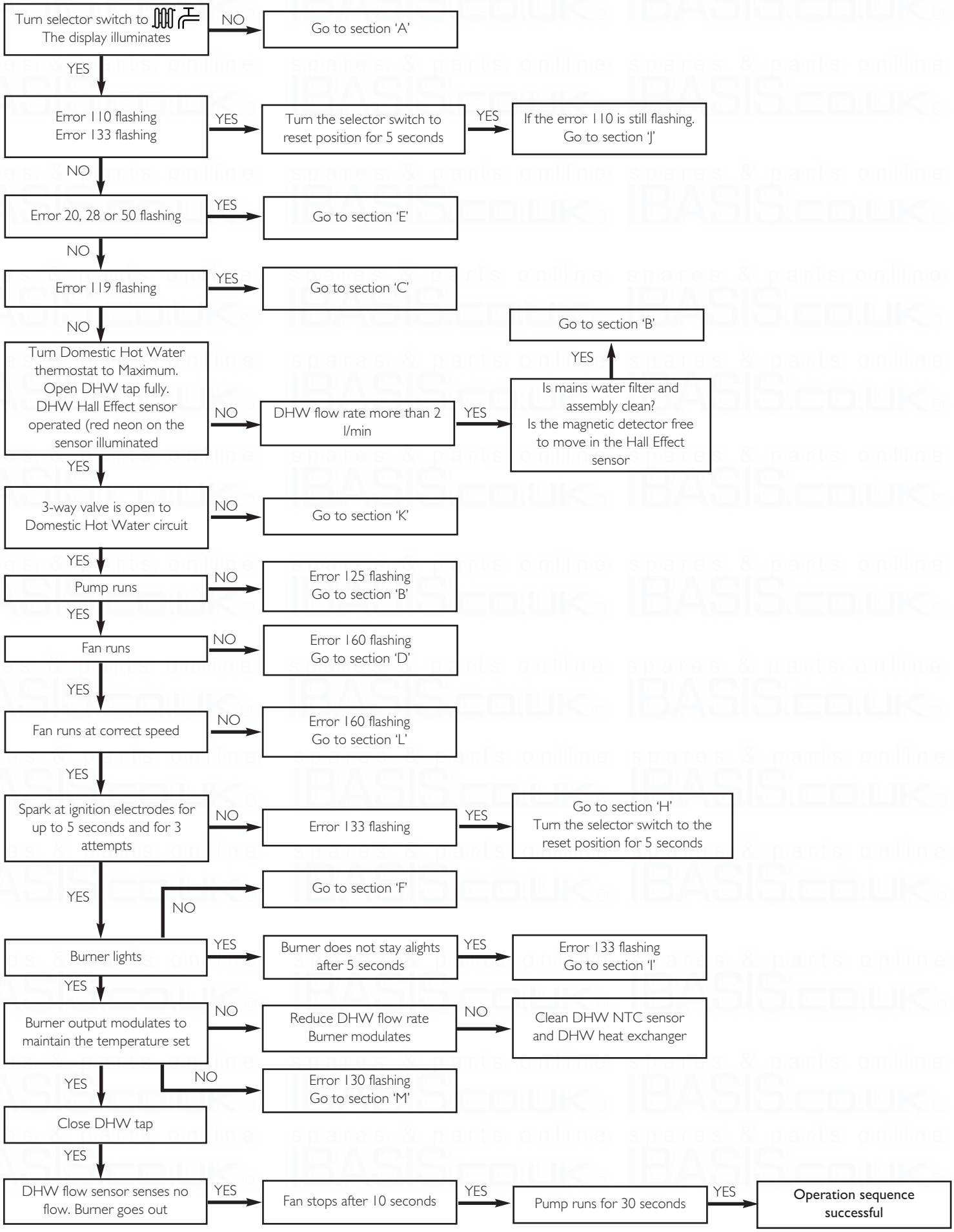

 © Baxi Heating UK Ltd 2007

Fault Finding Solutions Sections

A

Is there 230V at:

1. Main terminals L and N — NO → Check electrical supply
2. Main terminal fuse — NO → Replace fuse
3. PCB - X1 connector terminals 1,2 — NO → Check wiring

Check electrical supply / Replace fuse / Check wiring → Display illuminated — NO → Replace PCB

B

Is there 230V at:

1. Pump — YES → If pump jammed, release — NO → Replace pump
2. PCB - X3 connector terminals 3 & 4 — NO → Replace PCB
   YES → Change pump supply cable

C

1. CH system pressure less than 0.5 bar — YES → Re-pressurise system
   NO → Check connection water pressure switch terminal COM - NO and PCB connector X400 terminals 3,4 — YES → Replace water pressure switch
2. Check the tap of the automatic air vent is opened — NO → Open the automatic air vent

D

1. Fan connections correct at fan. PCB - X2 connector, is 230V AC across terminals 5 & 7
   YES → Fan jammed or faulty winding — YES → Replace fan
   NO → Replace PCB

© Baxi Heating UK Ltd 2007

E

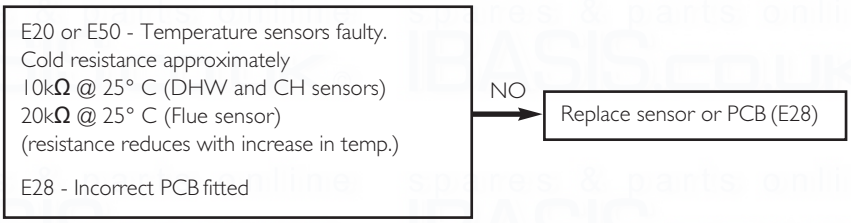

F

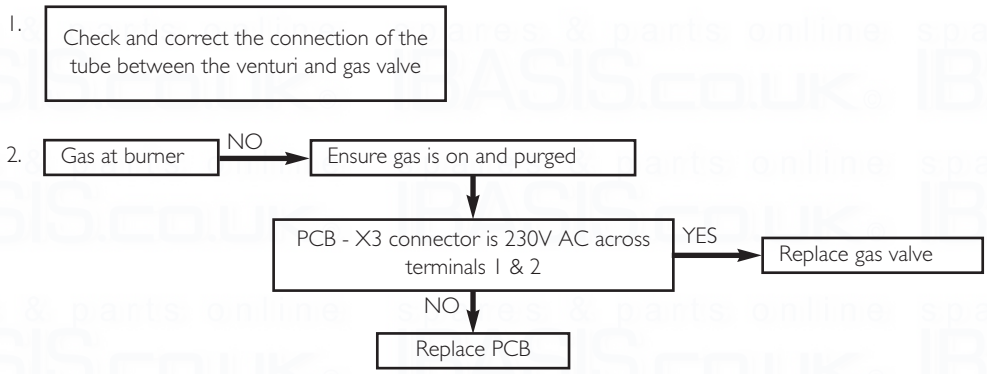

G

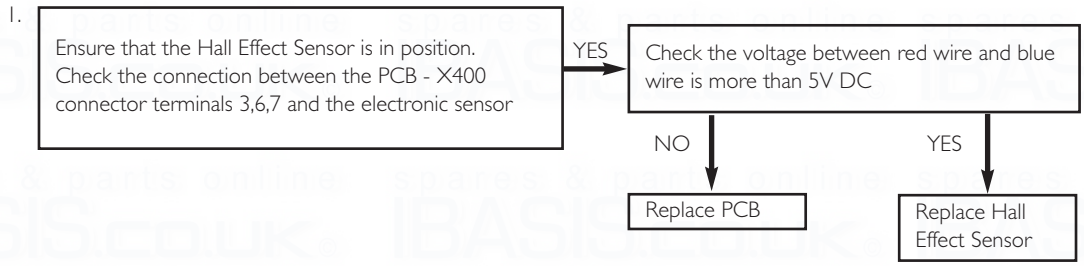

H

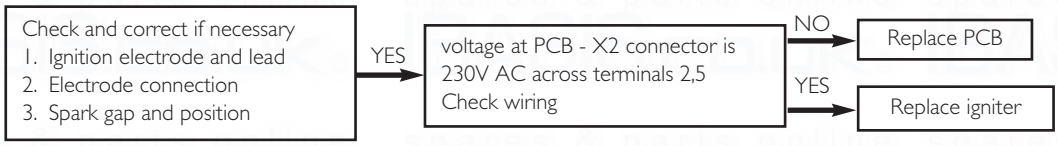

 © Baxi Heating UK Ltd 2007

I

1. Check the gas supply pressure:
For Natural Gas greater than
10 - 11 mbar

2. Check and correct if necessary
1. The mechanical set of the gas valve
(CO2 values - see instruction)
2. Flame sensing electrode and lead connections
3. Flame sensing electrode position

Flame current should be more than 0.5 µA

YES → Replace PCB

NO → Replace flame sensing electrode

J

1. Overheat thermostat operated or faulty, i.e. continuity across thermostat terminals

NO → Allow to cool. Continuity across thermostat terminals more than 1.5 ohm → YES → Replace safety thermostat

YES → Replace PCB

K

Is there 230V at:

1. Motor 3-way valve → YES → Replace motor 3-way valve

2. PCB - X3 connector terminals
5 & 6 central heating mode
5 & 7 domestic hot water mode

NO → Replace PCB

YES → Change pump supply cable

L

1. Fan connections correct at fan.
PCB - X401 connector terminals 5,6,7 & 8

YES → Replace fan

M

1. Temperature sensors faulty.
Cold resistance approximately
10kΩ @ 25° C (CH sensor)
20kΩ @ 25° C (Flue sensor)
(resistance reduces with increase in temp.)

NO → Replace sensor

2. If pump is running the heat exchanger could be obstructed

YES → Replace heat exchanger

© Baxi Heating UK Ltd 2007

spares & parts online IBASIS.CO.UK®

 © Baxi Heating UK Ltd 2007

© Baxi Heating UK Ltd 2007

BENCHMARK No. 5 1 1 4 4 4 4

GAS BOILER COMMISSIONING CHECKLIST

BOILER SERIAL No. _____ **NOTIFICATION No.** _____

CONTROLS *To comply with the Building Regulations, each section must have a tick in one or other of the boxes*

TIME & TEMPERATURE CONTROL TO HEATING	ROOM T/STAT & PROGRAMMER/TIMER	☐	PROGRAMMABLE ROOMSTAT	☐
TIME & TEMPERATURE CONTROL TO HOT WATER	CYLINDER T/STAT & PROGRAMMER/TIMER	☐	COMBI BOILER	☐
HEATING ZONE VALVES	FITTED	☐	NOT REQUIRED	☐
HOT WATER ZONE VALVES	FITTED	☐	NOT REQUIRED	☐
THERMOSTATIC RADIATOR VALVES	FITTED	☐		
AUTOMATIC BYPASS TO SYSTEM	FITTED	☐	NOT REQUIRED	☐

FOR ALL BOILERS CONFIRM THE FOLLOWING

THE SYSTEM HAS BEEN FLUSHED IN ACCORDANCE WITH THE BOILER MANUFACTURER'S INSTRUCTIONS? ☐

THE SYSTEM CLEANER USED

THE INHIBITOR USED

FOR THE CENTRAL HEATING MODE, MEASURE & RECORD

GAS RATE		m^3/hr		ft^3/hr
BURNER OPERATING PRESSURE (IF APPLICABLE)	☐	N/A		mbar
CENTRAL HEATING FLOW TEMPERATURE				°C
CENTRAL HEATING RETURN TEMPERATURE				°C

FOR COMBINATION BOILERS ONLY

HAS A WATER SCALE REDUCER BEEN FITTED? YES ☐ NO ☐

WHAT TYPE OF SCALE REDUCER HAS BEEN FITTED?

FOR THE DOMESTIC HOT WATER MODE, MEASURE & RECORD

GAS RATE		m^3/hr		ft^3/hr
MAXIMUM BURNER OPERATING PRESSURE (IF APPLICABLE)	☐	N/A		mbar
COLD WATER INLET TEMPERATURE				°C
HOT WATER OUTLET TEMPERATURE				°C
WATER FLOW RATE				lts/min

FOR CONDENSING BOILERS ONLY CONFIRM THE FOLLOWING

THE CONDENSATE DRAIN HAS BEEN INSTALLED IN ACCORDANCE WITH THE MANUFACTURER'S INSTRUCTIONS? YES ☐

FOR ALL INSTALLATIONS CONFIRM THE FOLLOWING

THE HEATING AND HOT WATER SYSTEM COMPLIES WITH CURRENT BUILDING REGULATIONS ☐

THE APPLIANCE AND ASSOCIATED EQUIPMENT HAS BEEN INSTALLED AND COMMISSIONED IN ACCORDANCE WITH THE MANUFACTURER'S INSTRUCTIONS ☐

IF REQUIRED BY THE MANUFACTURER, HAVE YOU RECORDED A CO/CO_2 RATIO READING? N/A ☐ YES _____ CO/CO_2 RATIO

THE OPERATION OF THE APPLIANCE AND SYSTEM CONTROLS HAVE BEEN DEMONSTRATED TO THE CUSTOMER ☐

THE MANUFACTURER'S LITERATURE HAS BEEN LEFT WITH THE CUSTOMER ☐

COMMISSIONING ENG'S NAME PRINT _____ CORGI ID No. _____

SIGN _____ DATE _____

SERVICE INTERVAL RECORD

It is recommended that your heating system is serviced regularly
and that you complete the appropriate Service Interval Record Below.

Service Provider. Before completing the appropriate Service Interval Record below, please ensure you have carried out the service as described in the boiler manufacturer's instructions. Always use the manufacturer's specified spare part when replacing all controls

SERVICE 1 DATE
ENGINEER NAME
COMPANY NAME
TEL No.
CORGI ID CARD SERIAL No.
COMMENTS

SIGNATURE

SERVICE 2 DATE
ENGINEER NAME
COMPANY NAME
TEL No.
CORGI ID CARD SERIAL No.
COMMENTS

SIGNATURE

SERVICE 3 DATE
ENGINEER NAME
COMPANY NAME
TEL No.
CORGI ID CARD SERIAL No.
COMMENTS

SIGNATURE

SERVICE 4 DATE
ENGINEER NAME
COMPANY NAME
TEL No.
CORGI ID CARD SERIAL No.
COMMENTS

SIGNATURE

SERVICE 5 DATE
ENGINEER NAME
COMPANY NAME
TEL No.
CORGI ID CARD SERIAL No.
COMMENTS

SIGNATURE

SERVICE 6 DATE
ENGINEER NAME
COMPANY NAME
TEL No.
CORGI ID CARD SERIAL No.
COMMENTS

SIGNATURE

SERVICE 7 DATE
ENGINEER NAME
COMPANY NAME
TEL No.
CORGI ID CARD SERIAL No.
COMMENTS

SIGNATURE

SERVICE 8 DATE
ENGINEER NAME
COMPANY NAME
TEL No.
CORGI ID CARD SERIAL No.
COMMENTS

SIGNATURE

SERVICE 9 DATE
ENGINEER NAME
COMPANY NAME
TEL No.
CORGI ID CARD SERIAL No.
COMMENTS

SIGNATURE

SERVICE 10 DATE
ENGINEER NAME
COMPANY NAME
TEL No.
CORGI ID CARD SERIAL No.
COMMENTS

SIGNATURE

All descriptions and illustrations provided in this leaflet have been carefully prepared but we reserve the right to make changes and improvements in our products which may affect the accuracy of the information contained in this leaflet. All goods are sold subject to our standard Conditions of Sale which are available on request.

POTTERTON
A Trading Division of Baxi Heating UK Ltd
Brooks House, Coventry Road, Warwick. CV34 4LL
After Sales Service 08706 017 017 Technical Enquiries 08706 049 049
Website www.potterton.co.uk
e&oe

A BAXI GROUP company

IT Comp N° 925.096.2

© Baxi Heating UK Ltd 2007

UK Comp N° 5114444 - Iss 5 - 5/07

POTTERTON

User's Guide and Important Warranty Information

Promax Combi 24, 28 & 33 HE Plus

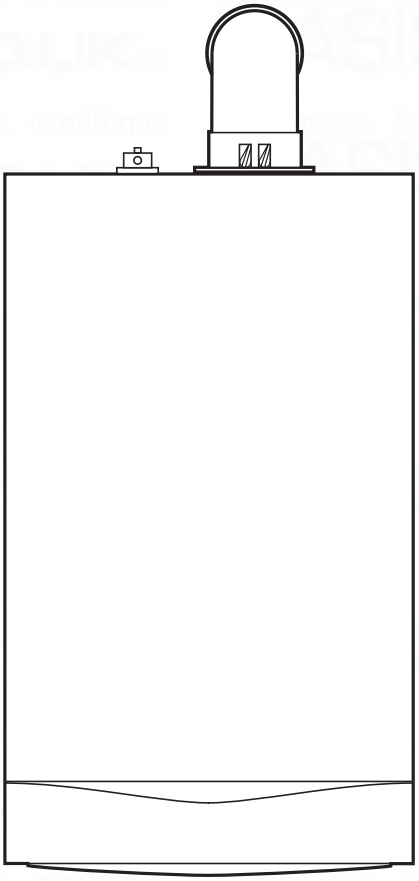

Please keep these instructions in a safe place.
If you move house, please hand them over to the next occupier.

© Baxi Heating UK Ltd 2007

Natural Gas

Potterton Promax Combi 24 HE Plus
G.C.N° 47 393 17
Potterton Promax Combi 28 HE Plus
G.C.N° 47 590 04
Potterton Promax Combi 33 HE Plus
G.C.N° 47 590 03

Where fitted, user label for optional timer to be applied here.

Contents

Section		Page
1.0	Quick Reference Guide	3
2.0	Troubleshooting	4
3.0	Repressurising System	6
4.0	Clearances	7
5.0	Care of the Boiler	8
6.0	Legislation	9
7.0	Notes	10
8.0	Emergency	11
9.0	Warranty & Service	12

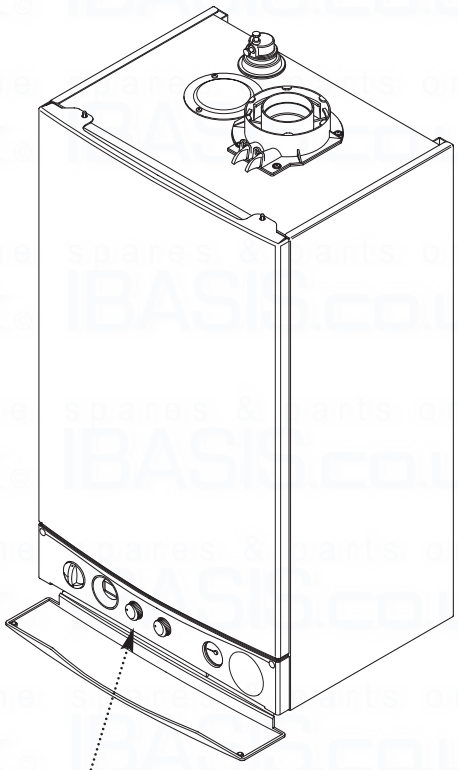

Boiler Controls - see opposite page for Operating Quick Reference Guide

© Baxi Heating UK Ltd 2007 All rights reserved. No part of this publication may be reproduced or transmitted in any form or by any means, or stored in any retrieval system of any nature (including in any database), in each case whether electronic, mechanical, recording or otherwise, without the prior written permission of the copyright owner, except for permitted fair dealing under Copyrights, Designs and Patents Act 1988.

Applications for the copyright owner's permission to reproduce or make other use of any part of this publication should be made, giving details of the proposed use, to the following address:

The Company Secretary, Baxi Heating UK Ltd, Pentagon House, Sir Frank Whittle Road, Derby, DE21 4XA.

Full acknowledgement of author and source must be given.

WARNING: Any person who does any unauthorised act in relation to a copyright work may be liable to criminal prosecution and civil claims for damages.

This product has an energy rating (A) on a scale of A to G.
For more information see www.boilers.org.uk. This is a certification mark.

"Potterton" supports

The code of practice for the installation, commissioning & servicing of central heating systems.

Baxi Heating UK Ltd is a BS-EN ISO 9001 Accredited Company

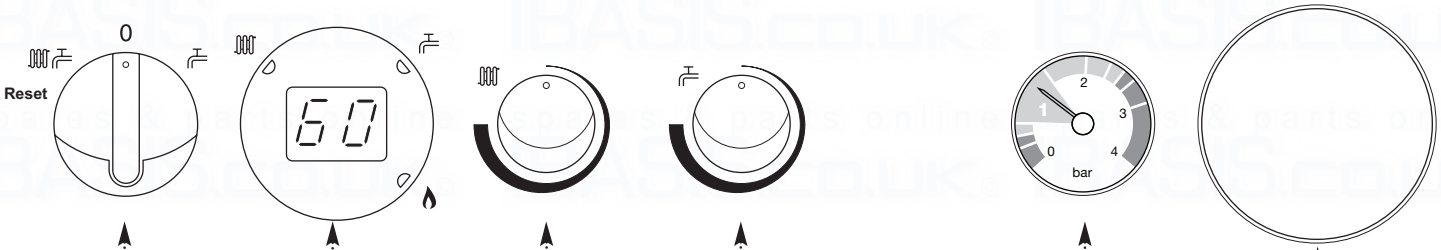

ON/OFF/Reset Selector Switch | Display | Central Heating Temperature Control | Domestic Hot Water Temperature Control & Pre-heat Selector | System Pressure Gauge | Position of Optional Timer

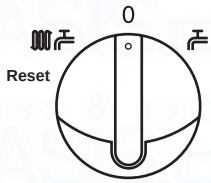

OFF Position
The boiler will not operate.

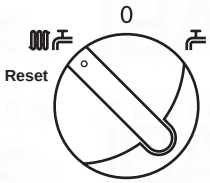

Central Heating & Hot Water
Both Heating & Hot Water will operate.

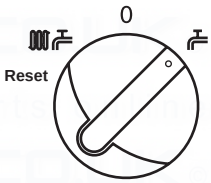

Domestic Hot Water
Hot Water will operate.

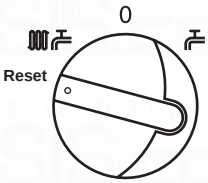

Reset
Hold for approx 5 seconds and release.

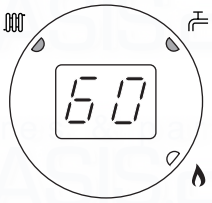

Display

Central Heating Indicator - The indicator will illuminate when the boiler is in the central heating mode.

Domestic Hot Water Indicator - The indicator will illuminate when hot water is being supplied to a tap or shower.

Burner On Indicator - The indicator will illuminate when the burner has fired and is heating your central heating or domestic hot water.

Boiler Output Temperature - In either the central heating or domestic hot water position the display will illuminate showing the current boiler temperature in degrees centigrade.

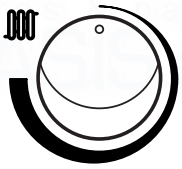

Central Heating Temperature Control
Turn the knob clockwise to increase or anticlockwise to decrease the temperature.
Range 25 - 80° C.

Domestic Hot Water Temperature Control
Turn the knob clockwise to increase or anticlockwise to decrease the temperature.
Range 35 - 60° C.

Central Heating System Pressure - The normal operating water pressure is shown when the needle is in the GREEN section of the gauge, between 1 and 2.5 bar. If the pressure exceeds 3 bar (needle in the RED section) the safety pressure valve will operate and a fault is indicated. Contact your Installer.

© Baxi Heating UK Ltd 2007

Boiler not working

START

Make sure the gas supply is turned ON and check if other gas appliances are operating (e.g. fire, cooker).

YES → Is the ON/OFF/Reset Select Switch in the ( ) position and the display lit ?

YES → Is the ( ) or ( ) light on and the ( ) on ?

NO → If no gas, consult your supplier.

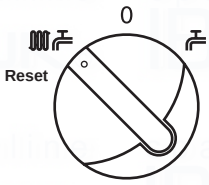

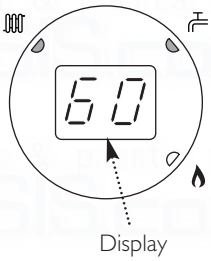

NO → Check electricity to the boiler is switched on.

YES → Boiler operating satisfactorily.

Is the Central Heating System Pressure needle in the GREEN section, between 1 and 2.5 bar ?

NO →

If the reading falls below 1 bar repressurise the system as described in section 3.1.

YES → Does the display show an error code e.g. E133, E110 ?

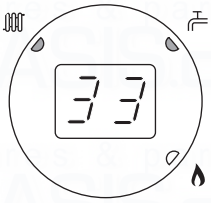

YES → Turn the ON/OFF/Reset Selector Switch to Reset.

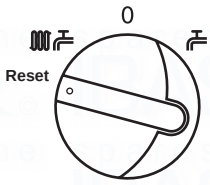

If boiler does not Reset

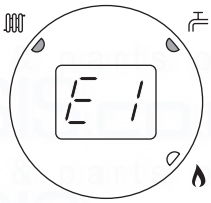

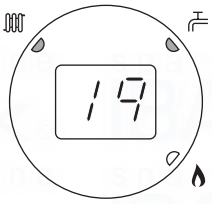

Error Code E119 showing low pressure.

© Baxi Heating UK Ltd 2007

Is the Timer ON and calling for heat ?

YES

Is the Room Thermostat (if fitted) set high enough ?

YES

Typical examples of external timer

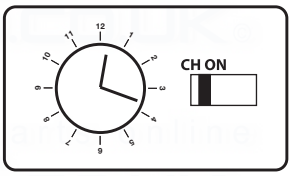

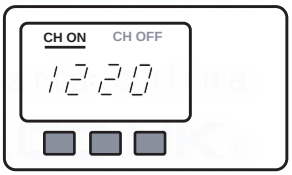

NO

Ensure timer is set for Central Heating ON (see any instructions supplied with timer).

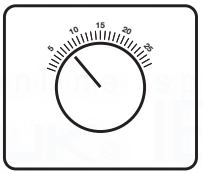

NO

Turn Room Thermostat to maximum setting (typical example shown).

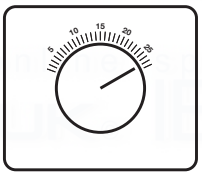

CONTACT YOUR INSTALLER OR SERVICE ENGINEER.

If you don't know what you need to do to get the boiler to light, or need help with the system and controls, contact your installer as soon as possible.

© Baxi Heating UK Ltd 2007

3.0 Repressurising System

3.1 Central Heating System Pressure

1. The water pressure in the central heating system is indicated by the pressure gauge.

2. With the system cold and the boiler not operating the pressure should be at least 0.5 bar. During operation the pressure should not exceed 2.5 bar, and will normally be between 1.0 and 2.0 (Fig. 1).

3. A pressure of 3 or greater indicates a fault. The safety pressure relief valve will operate, at a pressure of 3 (Fig. 3). **It is important that your Installer or Service Engineer is contacted as soon as possible.**

4. The minimum pressure for correct operation is 0.5. If the pressure falls below 0.5, this may indicate a leak on the central heating system (Fig. 2). Error Code E119 will be shown on the display.

Fig. 1

Normal Pressure

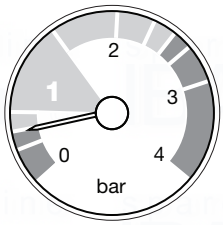

Fig. 2

Requires Repressurising

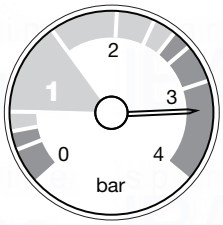

Fig. 3

Fault

3.2 To Re-Pressurise the System (Optional Filling Loop)

1. The procedure is for the optional filling loop kit when fitted. However, even if your boiler has an external loop, the principle is similar.

2. Look at the boiler from underneath. There will be two taps at the end of copper pipes, one with a blanking cap on the end. Do not operate these taps yet.

3. Your installer will have left a metal braided hose (the 'filling loop') with you for safe keeping.

4. This loop MUST be connected to the taps. Remove the blanking cap and set aside.

5. Connect the loop to the taps with the wing nuts. These should be hand tightened.

6. Carefully open the handles on both taps and check the boiler pressure gauge. Once the needle on the gauge is above the 0.5 mark both taps can be closed.

7. Undo the two wing nuts, remove the loop and refit the blanking cap. Put the loop in a safe place for future use.

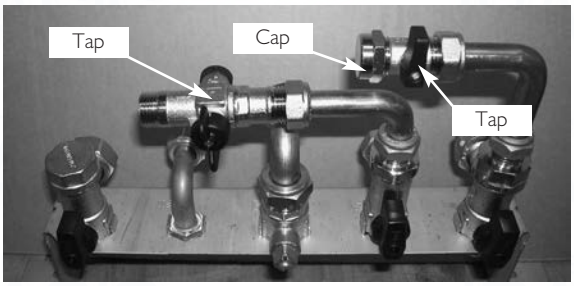

Boiler Taps & Connections, as viewed from underneath

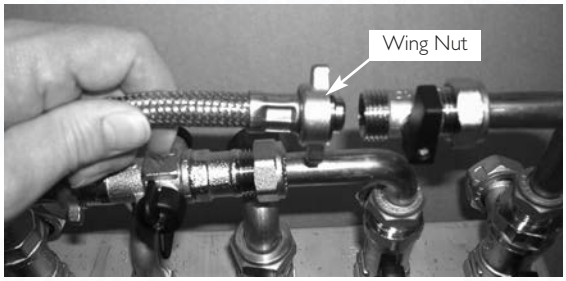

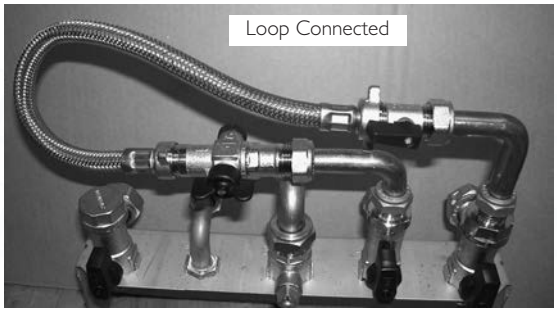

© Baxi Heating UK Ltd 2007

4.0 Clearances

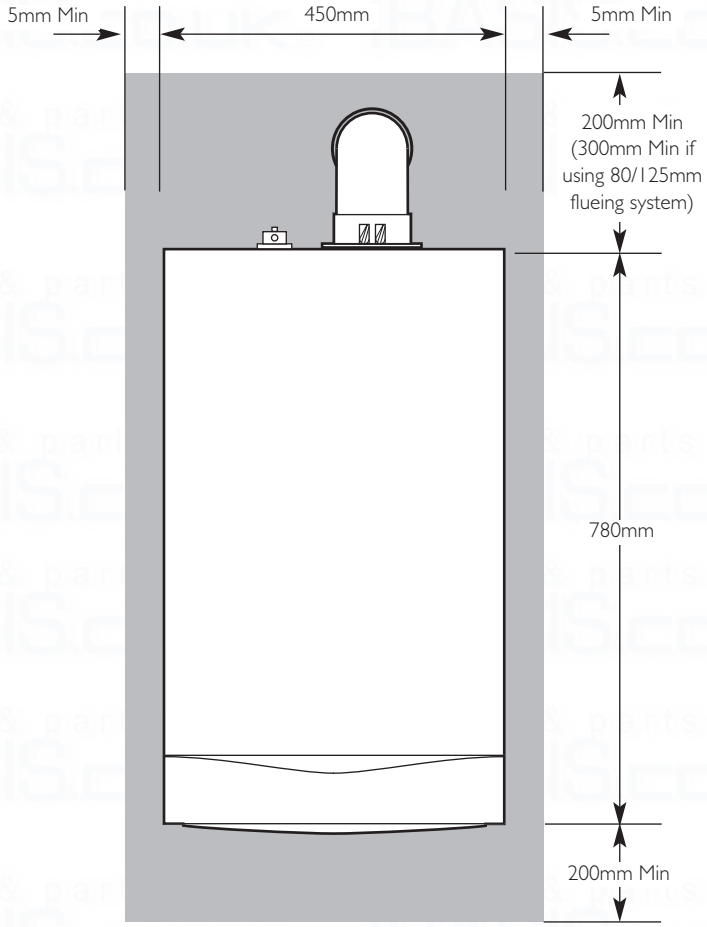

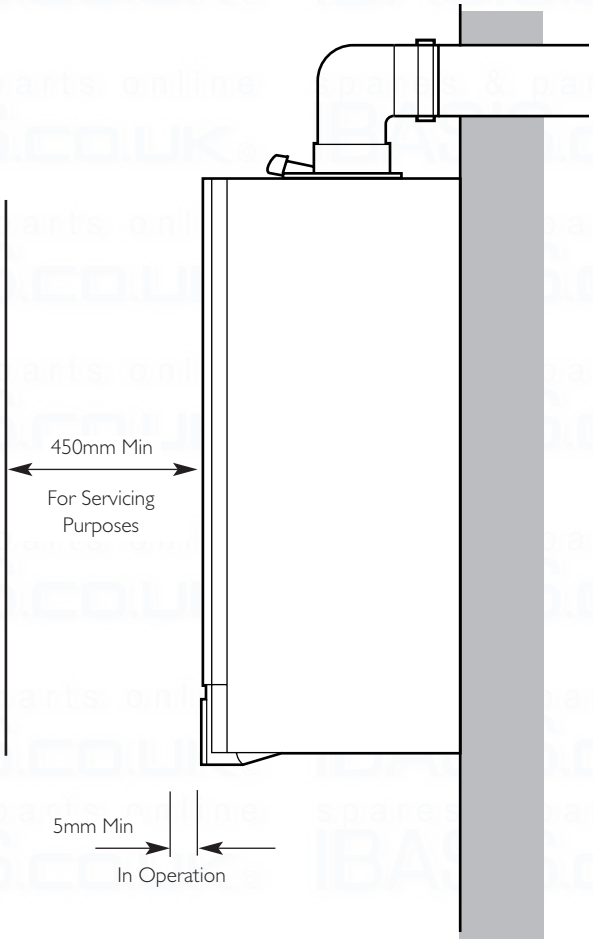

Fig. 4

4.1 For your Safety

1. This appliance must have been installed in accordance with the manufacturer's instructions and the regulations in force.

2. Any modification that may interfere with the normal operation of the appliance without express written permission from the manufacturer or his agent could invalidate the appliance warranty. In GB this could also infringe the Gas Safety (Installation and Use) Regulations.

> **GB** - Heating Industry definition meaning England, Scotland, Wales, Northern Ireland, Isle of Man and the Channel Isles

3. Your boiler must not be operated without the casing correctly fitted.

4. Do not interfere with any sealed components on this boiler.

5. Take note of any warning labels on your boiler.

6. Your boiler should have the following minimum clearances for Safety and Maintenance (Fig. 34):-

Top	- 200mm
Bottom	- 200mm
Left side	- 5mm
Right Side	- 5mm
Front	- 5mm (In Operation)
	- 450mm (For Servicing)

7. If your boiler is installed in a compartment, do not use it for storage purposes. Do not obstruct any purpose provided ventilation openings.

8. Flammable materials must not be stored in close proximity to your boiler.

9. Avoid skin contact when your boiler is in operation, as some surfaces may get hot e.g. pipework.

10. Ensure that the flue terminal, outside the house, does not become damaged or obstructed, particularly by foliage.

11. It is important that the condensate drain system is not blocked, modified or damaged in any way as this would affect the operation of your boiler. Your installer should have insulated any exposed pipework.

© Baxi Heating UK Ltd 2007

5.0 Care of the Boiler

5.1 Cleaning the Outer case

The painted panels should be wiped with a damp cloth and then dried completely. DO NOT USE ABRASIVE CLEANING AGENTS.

5.2 Protection & Precaution

1. The boiler incorporates an integral frost protection feature that will operate in both modes. If the boiler temperature falls below 5° C, then the boiler will operate until the water temperature has been raised.

2. If a system frost thermostat has been fitted (your installer will be able to advise you), then to operate correctly and protect your system, the gas and electricity must be left on and the appliance set in the central heating mode.

3. The boiler incorporates an integral pump protection feature which continually monitors the time since the pump last operated. To prevent seizure, the pump will operate for approximately 1 minute if it has not run in the last 24 hours.

5.3 Fault Indication

1. If a fault occurs on the boiler an error code may be shown on the facia display (Fig. 5).

2. The codes are either two or three digit, preceded by the letter 'E'. For example, code E133 will be displayed by 'E1' alternating with '33'. E50 is shown as 'E' then '50'.

3. E20, E28, E50, E125 & E160 indicate faulty components. You should make a note of the displayed error code and contact your installer or service engineer.

4. If E110 or E130 is displayed overheat of the primary water or flue system has occurred. Turn the selector switch to the reset position and hold for at least 5 seconds. If the boiler does not relight, or the code is displayed regularly contact your installer or service engineer.

5. E119 is displayed when the primary water pressure is less than 0.5 bar. After repressurising the system the boiler should operate. Your installer will be able to advise you about the method of repressurising. See page 6 for further details.

6. E133 indicates that the gas supply has been interrupted, ignition has failed or the flame has not been detected. Ensure that the gas supply has not been turned off, and turn the selector switch to the reset position and hold for at least 5 seconds. If the boiler does not relight, or the code is displayed regularly contact your installer or service engineer.

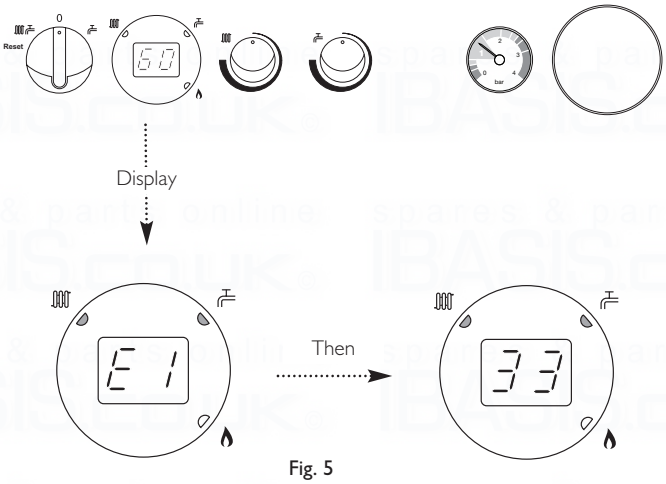

Fig. 5

Table of Error Codes

E20	Central Heating NTC Fault
E28	Flue NTC Fault
E50	Hot Water NTC Fault
E110	Safety Thermostat Operated
E119	Water Pressure Switch Not Operated
E125	Circulation Fault (Primary Circuit)
E130	Flue NTC Operated
E133	Interruption Of Gas Supply or Flame Failure
E160	Fan or Fan Wiring Fault

© Baxi Heating UK Ltd 2007

6.0 Legislation

6.1 Installation, Commissioning, Service & Repair

1. This appliance must be install in accordance with the manufacturer's instructions and the regulations in force. Read the instructions fully before installing or using the appliance.

2. In GB, this must be carried out by a competent person as stated in the Gas Safety (Installation & Use) Regulations.

3. **Definition of competence:** A person who works for a CORGI registered company and holding current certificates in the relevant ACS modules, is deemed competent.

4. IN IE (Eire), this must be carried out by a competent person as stated in I.S. 813 "Domestic Gas Installations".

All CORGI registered installers carry a CORGI identification card (see Fig. 6) and have a registration number. You can check your installer is registered by telephoning 0870 4012300 or writing to:-

1 Elmwood,
Chineham Business Park,
Crockford Lane,
Basingstoke. RG24 8WG.

or check online at www.corgi-gas-safety.com

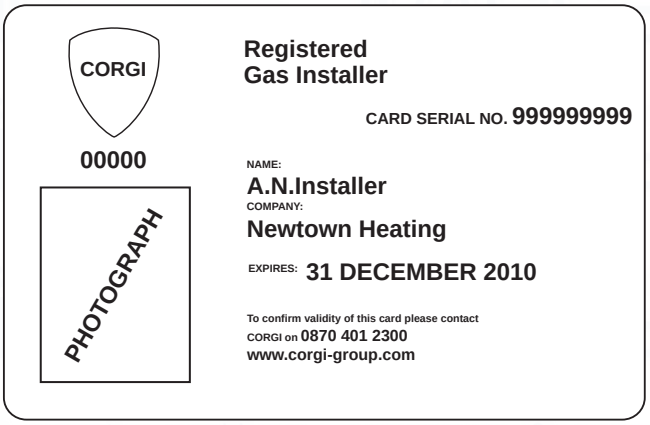

Fig. 6 CORGI Registration Card

The boiler meets the requirements of Statutory Instrument "The Boiler (Efficiency) Regulations 1993 No 3083" and is deemed to meet the requirements of Directive 92/42/EEC on the energy efficiency requirements for new hot water boilers fired with liquid or gaseous fuels:-

Type test for purpose of Regulation 5 certified by:
Notified Body 0085.

Product/Production certified by:
Notified Bodies 0085 & 0086.

For GB/IE only.

6.2 Benchmark Commissioning Checklist

1. Please ensure that your installer hands you the boiler Installation & Service Instructions with the "Benchmark Commissioning Checklist sections completed. The details in the Checklist will be required in the event of any warranty work. Keep the instructions in a safe place and ensure that the Service Interval Record at the back is completed at each service visit.

© Baxi Heating UK Ltd 2007

spares & parts online IBASIS.CO.UK®

 © Baxi Heating UK Ltd 2007

Warning !

If you smell gas

Turn off the gas supply at the meter and call your gas supplier immediately. It is possible to isolate the boiler and at the isolating valve (Fig. 7).

In GB, Transco operate a 24 hour emergency service and the telephone number will be listed in your telephone directory.

Faulty boiler

If it is known or suspected that a fault exists on the boiler, it must not be used until the fault has been corrected by a competent person.

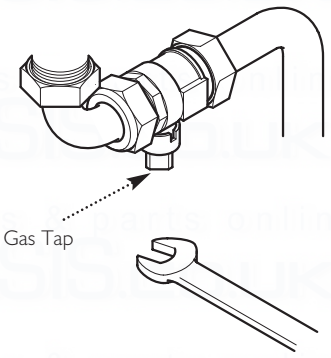

Fig. 7

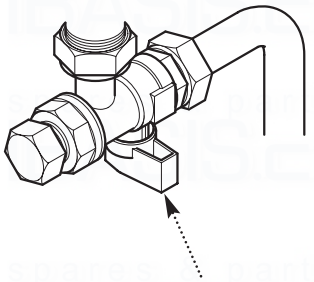

In an Emergency

If a water or gas leak occurs or is suspected, the boiler can be isolated at the inlet valves as follows;

1. Using a suitable open ended spanner, turn the square nut on the gas tap through 90° (1/4 turn) to isolate the gas supply at the boiler (Fig. 7).

3. The water isolating valves are positioned under the boiler and can be closed by turning their taps to the right towards the wall (Fig. 7).

4. Call your Installer or Service Engineer as soon as possible.

© Baxi Heating UK Ltd 2007

Please complete the boxes below

Serial Number

Date of Installation

D D M M Y Y

Installer Details (name, address and contact number(s))

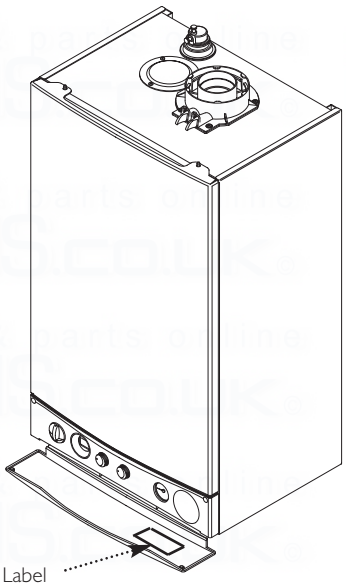

Information Label

All descriptions and illustrations provided in this leaflet have been carefully prepared but we reserve the right to make changes and improvements in our products which may affect the accuracy of the information contained in this leaflet. All goods are sold subject to our standard Conditions of Sale which are available on request.

POTTERTON
A Trading Division of Baxi Heating UK Ltd
Brooks House, Coventry Road, Warwick. CV34 4LL
After Sales Service 08706 017 017 Technical Enquiries 08706 049 049
Website www.potterton.co.uk
e&oe

A BAXI GROUP company

© Baxi Heating UK Ltd 2007

9.0 Warranty & Service

Standard Warranty Term & Conditions

12 Months Free Warranty - register today
To receive your 12 months free warranty please complete the form supplied with the boiler or simply call **heateam**, the service of Baxi Heating UK Ltd on **08706 000 653.**

Our promise to you
If you experience a fault with your new boiler, we aim to provide a safe and high quality repair service supported by our dedicated national network of highly skilled engineers. If your installer can't resolve the problem for you, we will do everything we can to get an engineer out to you as quickly as possible. Nothing in this warranty will affect your statutory consumer rights.

What you need to do if you experience a problem with your heating system or the operation of the boiler
You should always contact your installer first, because the fault may not be related to the boiler. If your installer confirms that the fault is within the boiler it self and he/she can't repair it, our friendly customer service team is on hand to help. Simply call our service division **heateam** on **08706 017 017** to book an engineer visit or for any general advice that you may need. Our contact centre is open Monday to Friday 8am - 6pm, weekends and Bank Holidays 8.30am - 2pm, excluding Christmas Day and New Years Day.

When calling **heateam** it would be helpful if you could have the following information to hand:-

1. boiler serial number (see opposite).
2. boiler make and model number.
3. Your installer name and address details.
4. Proof of purchase (if you do not have the boiler serial number).

What this warranty covers
Free of charge repair or replacement of components found to be faulty from manufacture.

Free of charge replacement of the complete unit provided always that the failure is related to a manufacturing fault that cannot be repaired or is uneconomic to repair.

The warranty runs for 12 months from the date your product is installed.

What this warranty does not cover
Repairs to boilers which haven't been installed and commissioned properly, and as set out in the installation instructions (this includes the need to flush the system effectively and add a suitable corrosion inhibitor).

Any damage caused by hard water scale deposits and/or aggressive water resulting from corrosion.

Any other defects or failures, either in the connected heating system or outside of the boiler itself.

Faults caused by inadequate supply of electricity, gas or water to the property.

Installations within commercial settings for which this boiler was not designed.

Reimbursement of any third party repair or replacement costs that we haven't been told about or agreed with you in advance.

Compensation for consequential losses (e.g. loss of earnings, business losses, stress and inconvenience) arising from a production breakdown, including repair delays caused by factors outside our reasonable control.

Annual Service
To ensure you receive the maximum efficiency from your boiler we recommend your boiler has an annual service so you and your family can continue to enjoy heating and hot water comfort. To arrange an annual service from one of our Baxi Heating UK Ltd heating experts, please call to arrange a visit convenient to you.

IT Comp N° 925.095.2

UK Comp N° 5114443 - Iss 5 - 5/07