United Kingdom
**en**

POTTERTON

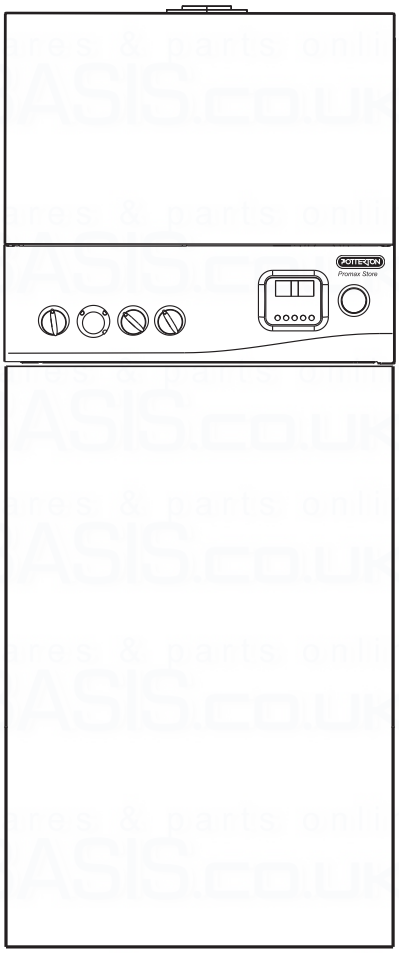


# Installation and Service Manual

## Condensing Boiler with Integrated Hot Water Storage

## Promax Store
24

These instructions include the Benchmark Commissioning Checklist
and should be left with the user for safe keeping.

spares & parts online IBASIS.CO.UK

## Natural Gas

**Potterton Promax 24 Store ErP**
G.C.N° 41 592 47 (90 litre)
G.C.N° 41 592 48 (115 litre)
G.C.N° 41 592 49 (150 litre)

**IMPORTANT**

Please read and understand all these instructions before commencing installation. Please leave this manual with the customer for future reference.

### *About the Boiler*

See page 4 for models covered by these instructions.
This is a Floor Mounted Fan Assisted Balanced Flue Gas Boiler.
This boiler is for use with Natural Gas (G20) only at 20 mbar and for use in GB/IE only.

### *About Safety*

The Gas Safety (Installation and Use) Regulations.

‘‘ In your own interest, and that of safety, it is law that all gas appliances are installed by competent persons, in accordance with the above regulations. Failure to install appliances correctly could lead to prosecution.’’

Installation must be in accordance with the Installation & Service Instructions and the rules in force.

**Read these Instructions before installing or lighting the boiler These Instructions include the Benchmark Commissioning Checklist and should be left with the user for safe keeping.**

**The Benchmark Scheme**

Benchmark places responsibilities on both manufacturers and installers. The purpose is to ensure that customers are provided with the correct equipment for their needs, that it is installed, commissioned and serviced in accordance with the manufacturer’s instructions by competent persons and that it meets the requirements of the appropriate Building Regulations. The Benchmark Checklist can be used to demonstrate compliance with Building Regulations and should be provided to the customer for future reference.

Installers are required to carry out installation, commissioning and servicing work in accordance with the Benchmark Code of Practice which is available from the Heating and Hotwater Industry Council who manage and promote the Scheme. Visit www.centralheating.co.uk for more information.

**© Baxi Heating UK Ltd 2015** All rights reserved. No part of this publication may be reproduced or transmitted in any form or by any means, or stored in any retrieval system of any nature (including in any database), in each case whether electronic, mechanical, recording or otherwise, without the prior written permission of the copyright owner, except for permitted fair dealing under Copyrights, Designs and Patents Act 1988.

Applications for the copyright owner’s permission to reproduce or make other use of any part of this publication should be made, giving details of the proposed use, to the following address:

The Company Secretary, Baxi Heating UK Ltd,
Brooks House, Coventry Road, Warwick. CV34 4LL

Full acknowledgement of author and source must be given.

**WARNING:** Any person who does any unauthorised act in relation to a copyright work may be liable to criminal prosecution and civil claims for damages.

**Building Regulations and the Benchmark Commissioning Checklist**

Building Regulations (England & Wales) require notification of the installation of a heating appliance to the relevant Local Authority Building Control Department. From 1 April 2005 this can be achieved via a Competent Persons Self Certification Scheme as an option to notifying the Local Authority directly. Similar arrangements will follow for Scotland and will apply in Northern Ireland from January 2006.

The Health & Safety Executive operates the ‘Gas Safe Register’, a self-certification scheme for gas heating appliances.

These arrangements represent a change from the situation whereby compliance with Building Regulations was accepted as being demonstrated by completion of the Benchmark Logbook (which was then left on site with the customer).

With the introduction of Self Certification Schemes, the Benchmark Logbook is being withdrawn. However, a similar document in the form of a commissioning checklist and service interval record is incorporated at the back of these instructions.

This company is a member of the Benchmark initiative and fully supports the aims of the programme. Its aim is to improve the standards of installation and commissioning of central heating systems in the UK and to encourage the regular servicing of all central heating systems to ensure safety and efficiency.

Building Regulations require that installations should comply with manufacturer's instructions. It is therefore important that the commissioning checklist is completed by the installer. The relevant section of Building Regulations only relates to dwellings. Therefore the checklist only applies if the appliance is being installed in a dwelling or some related structure.

The flowchart opposite gives guidance for installers on the process necessary to ensure compliance with Building Regulations.

CE 0086

energy saving trust endorsed product

benchmark COLLECTIVE MARK
THE MARK OF QUALITY FOR THE INSTALLATION, COMMISSIONING AND SERVICING OF DOMESTIC HEATING AND HOT WATER SYSTEMS

BSI

*ISO 9001*
*FM 00866*


© Baxi Heating UK Ltd 2015

# Installer Notification Guidelines

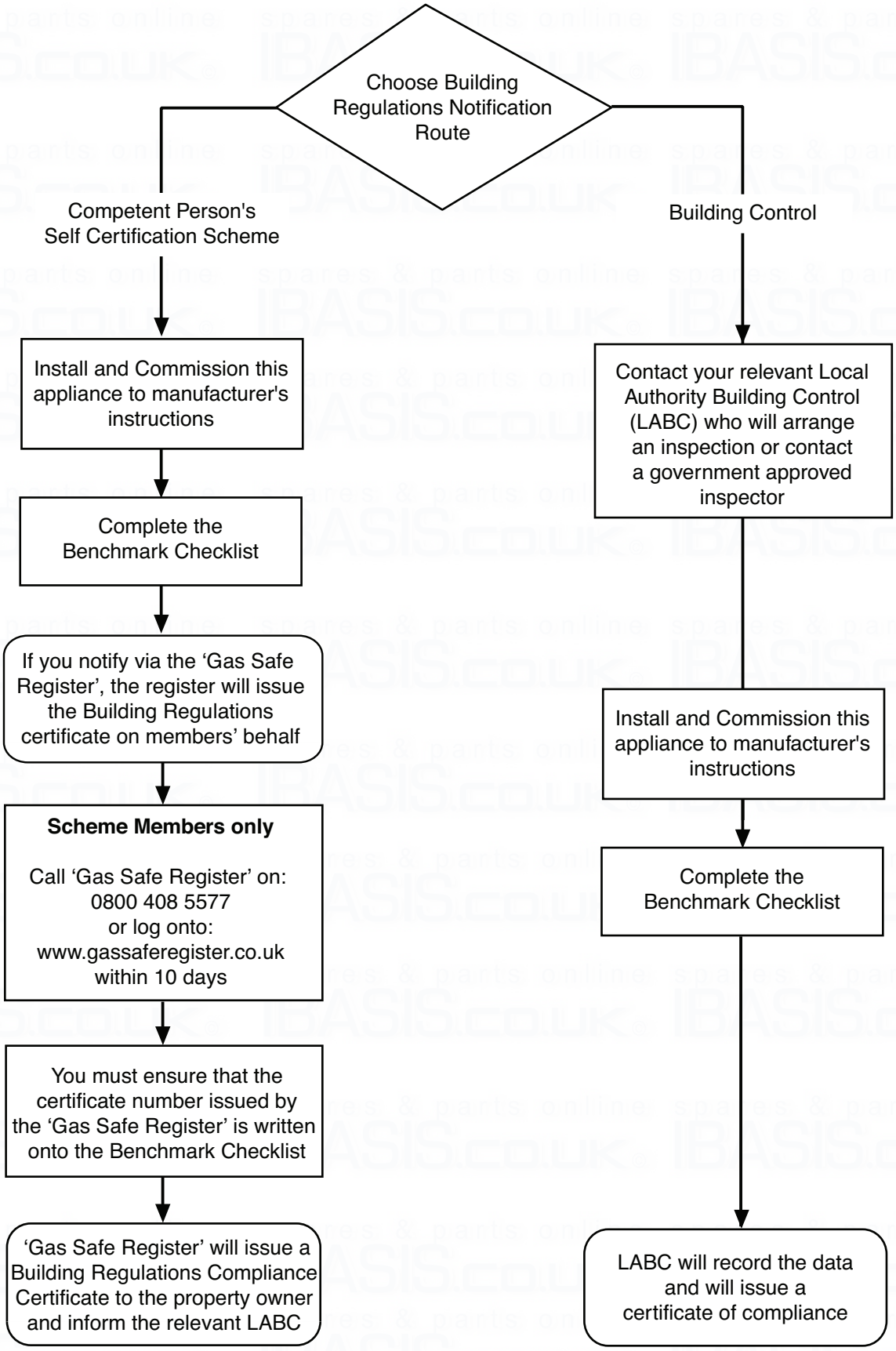


© Baxi Heating UK Ltd 2015

# Contents

**Panel Removal**
**Technical Data**
**Technical Parameters**

**Introduction**
Installation, Commissioning, Service & Repair
Health & Safety Information
Codes of Practice

**1. Installation Requirements**
Storage, Unpacking and Handling
1.1 Gas Supply
1.2 Electricity Supply
1.3 Location of Boiler
1.4 Compartment Installation & Ventilation
1.5 Flue Systems
1.6 Water Supply & Systems
1.7 Discharge Pipework

**2. Installation**
2.1 Install the Boiler
2.2 Connect the Flue System
2.3 Connect the Gas Supply
2.4 Connect the Condensate Pipe
2.5 Connect the Water Supply
2.6 Connect the Power Supply Cable
2.7 Optional Immersion Heater
2.8 How to Drain Hot Water Storage Cylinder
2.9 Control Panel, Display & Diagnostics

**3. Commissioning**
3.1 Commission the Boiler
3.2 Hand Over to the User

**4. Service & Replacement of Parts**
4.1 General Access
4.2 Automatic Air Vent
4.3 Expansion Vessel/Pump & Pressure Switch
4.3a Pump - Head Only
4.3b Pump - Complete
4.3c Automatic Air Vent
4.4 Pressure Sensor/Pressure Relief Valve
4.5 Gas Valve
4.6 Fan
4.7 Igniter
4.8 Spark and Sensing Electrodes
4.9 Overheat Thermostat
4.10 Burner
4.11 Insulation
4.12 Diverter Valve Actuator
4.13 Temperature Flow & Dry Fire Sensors
4.14 Heat Exchanger
4.15 Replacement of Immersion Heater etc
4.16 Gas/Air Valve Setup Procedure

**5. Wiring Diagrams**
**6. Fault Finding**
**Diagnostic Codes**
**7. Short List of Spares**

The models covered by these instructions are:-

| Promax 24 Store | G.C. No. |
|---|---|
| 90 Litres | 41 592 47 |
| 115 Litres | 41 592 48 |
| 150 Litres | 41 592 49 |

**Important**
*Refer to Page 11 for **Storage**, **Unpacking** and **Handling** Instructions.*

**Benchmark Commissioning Checklist**
Potterton is a member of the Benchmark initiative and fully supports the aims of the programme. Benchmark has been introduced to improve the standards of installation and commissioning of central heating systems in the UK and to encourage the regular servicing of all central heating systems to ensure safety and efficiency.

**Important** – Failure to install and commission this appliance to manufacturer's instructions may invalidate the warranty. This note does not affect your statutory rights.

**Gas Safe**
All Gas Safe registered engineers carry an ID card with their licence number and a photograph. You can check your engineer is registered by telephoning 0800 408 5500 or online at www.gassaferegister.co.uk

**Safety, Performance & Quality**
Promax Store boilers have been assessed by a Government appointed Notified Body and shown to meet the 'Essential Requirements' of the European Gas Appliance Directive 90/396/EEC.

The Directive lays down requirements for the safety and efficiency of the appliance, together with its design, construction, and use of materials.

It also requires the production process to be covered by an approved and monitored system of quality assurance.

**Warning -** The addition of anything that may interfere with the normal operation of the appliance without explicit written permission from the manufacturer or his agent could invalidate the appliance warranty. In GB this could also infringe the GAS SAFETY (Installation and Use) REGULATIONS.


© Baxi Heating UK Ltd 2015

# Panel Removal

**Important:** Refer to Page 11 for Storage, Unpacking and Handling Instructions.

## Top & Bottom Section

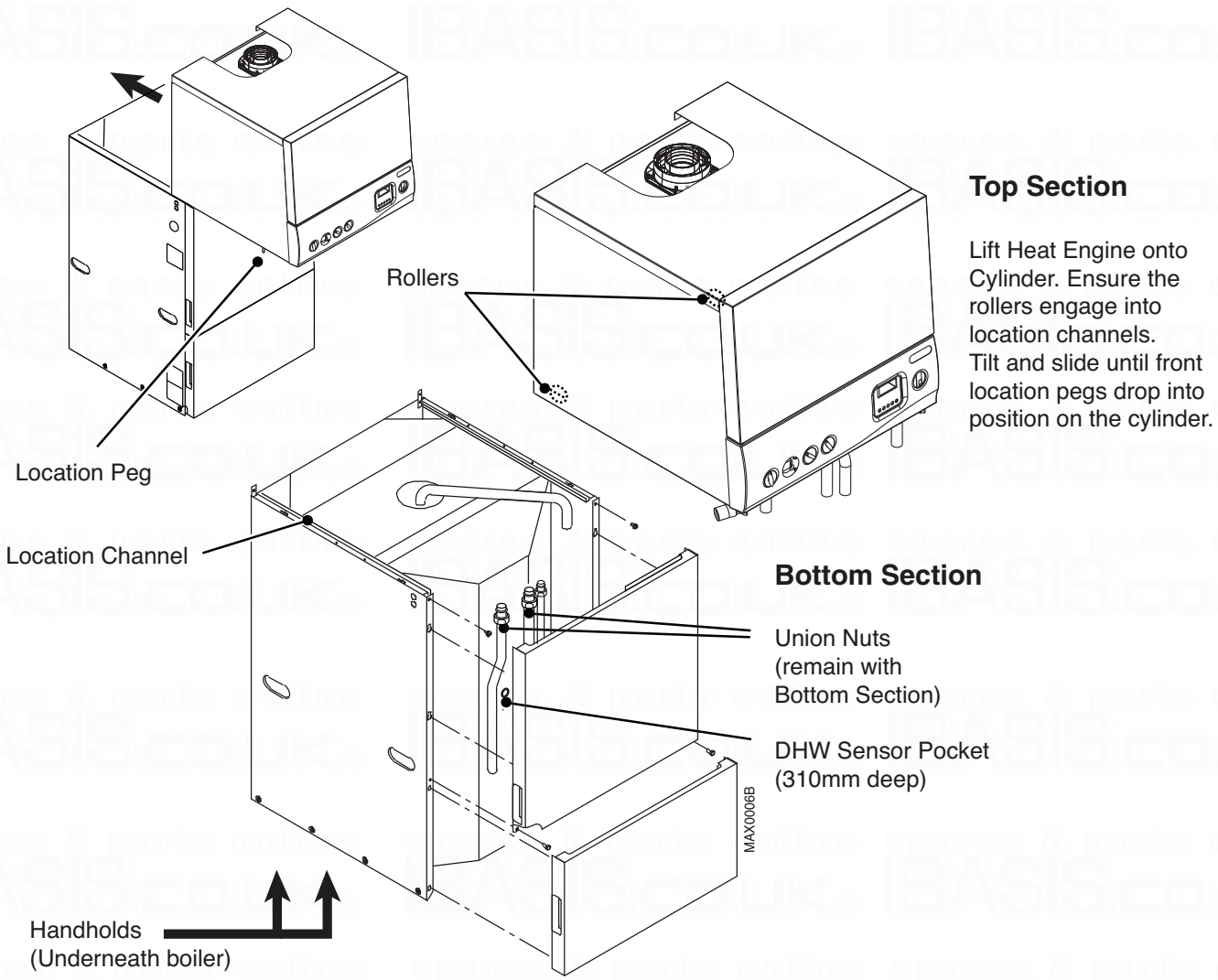


### Top Section

Lift Heat Engine onto Cylinder. Ensure the rollers engage into location channels.
Tilt and slide until front location pegs drop into position on the cylinder.

### Bottom Section

## Plumbing Access

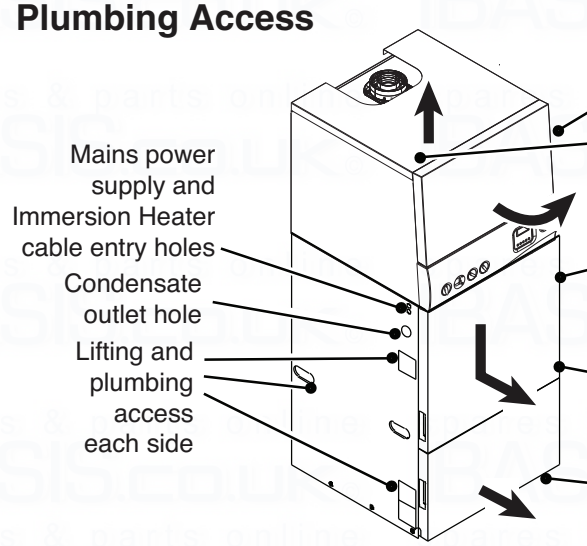


## General Access

1. Pull forward Front Panel at the bottom and lift off
2. Pull up and away Top Panel
4. Unscrew Upper Panel at the bottom and pull away
   - Retaining Screws (Upper Panel)
3. Pull forward Bottom Panel

Fig. 1

© Baxi Heating UK Ltd 2015

# Technical Data

| Unless indicated, data shown relevant to all models | | 90 litre | 115 litre | 150 litre |
|---|---|---|---|---|
| **Classifications** | Appliance category | CAT $I_2H$ | | |
| | Flue Type | $C_{13}$ - $C_{33}$ - $C_{53}$ (as supplied) | | |
| | NOx Class | 5 | | |
| | Cylinder Insulation | CFC, HCFC = 0% | | |
| **Input Qn Hs** (hot water/central heating) - gross | | 7.8 - 27.4 kW | | |
| **Output to CH Pn** (non-condensing) | | 6.8 - 24.0 kW | | |
| **Output to CH Pnc** (condensing) | | 7.6 - 25.9 kW | | |
| **Inlet pressure** | | 20 mbar | | |
| **Gas rate** (after 10 mins.) | | 2.6 $m^3$/hr max. | | |
| **Gas control differential** (offset) | | -3 Pa to - 8 Pa (- 0.03 to - 0.08 mbar) | | |
| **CO** (approx average) | | 70 ppm | | |
| **Ventilation Requirements:** | | No Compartment Ventilation Required | | |
| **Connections** | CH Flow & Return | 22 mm 'Techtite'/compression | | |
| | DHW Inlet & Outlet | 22 mm tube end | | |
| | Gas | 22 mm compression | | |
| | Temperature/Press. Relief Valve | 22 mm compression from tundish. | | |
| | Condensate Outlet | Flexible Pipe 500 mm long (fits 21.5 mm PP overflow systems) | | |
| | Inlet Control Group | 22 mm compression inlet & outlet<br>Set reduced pressure 2.5 bar, expansion relief valve set 8.0 bar | | |
| | Filling Loop | 15 mm /1/2" union (accessible behind lower front panel) | | |
| **Secondary Expansion Vessel** | | 12 litre, pre-charge 2.5 - 2.7 bar (supplied separately) | | |
| **Automatic bypass** | | Built in | | |
| **Pressure loss warning** | | Gauge on facia | | |
| **Built in programmer** | | 2-channel, pre-programmed, battery back-up, separate times for HW & CH, advance button, CH off selector | | |
| **External programmer** | | | | |
| **Built-in room thermostat** | | Dedicated connectors on user terminal block | | |
| **Built in frost protection** | | Boiler protected below 5 °C | | |
| **Optional Immersion Heater** | | Heatrae 'Mega'. 3 kW at 240V, Advantica Approved | | |
| **Electricity supply** | | 230v ~ 3A fused supply, | | |
| **Power Consumption** (maximum) | | 126W | | |
| **Working pressures** | Primary | 0.9 - 2.5 bar | | |
| | DHW | 1.0 - 2.5 bar | | |
| | Mains Supply | 1.0 - 16.0 bar | | |
| | Pressure Relief Valve (Primary) | 3.0 bar | | |
| | Temperature/Press. Relief Valve | Pre-set 95 °C, 10.0 bar opening | | |
| **DHW temperature** | | 30 °C to 60 °C | | |
| **DHW flow rate** (Practical maximum assuming suitable mains supply) | | 25 l/m max. | 25 l/m max. | 25 l/m max. |
| **Weights** | Lift Weight: Heat Engine | 45 kg | | |
| | Lift Weight: Cylinder | 37 kg | 41 kg | 49 kg |
| | Full Weight | 171 kg | 202 kg | 246 kg |
| **Cylinder Operational Summary** | Maximum Mains Pressure | 1.6MPa (16 bar) | | |
| | Operating Pressure/PRV | 0.25MPa (2.5 bar) | | |
| | Maximum Design Pressure | 0.8MPa (8 bar) | | |
| | Expansion Vessel Charge Pressure | 0.25MPa (2.5 bar) | | |
| | Expansion Relief Valve Setting | 0.8MPa (8 bar) | | |
| | T & P Relief Valve Setting | 90 - 95°C/1.0MPa (10 bar) | | |
| | Pressure Drop (Primary Coil) | 0.02MPa (0.2 bar) | | |
| **Cylinder Standing Heat Loss** | | 90L | 0.93kW/24hrs | |
| | | 115L | 1.04kW/24hrs | |
| | | 150L | 1.39kW/24hrs | |


© Baxi Heating UK Ltd 2015

# Technical Parameters

Technical parameters for boiler combination heaters

| Potterton Promax 24 Store ErP | | | 90 | 115 | 150 |
|---|---|---|---|---|---|
| Condensing boiler | | | Yes | Yes | Yes |
| Low-temperature boiler(1) | | | No | No | No |
| B1 boiler | | | No | No | No |
| Cogeneration space heater | | | No | No | No |
| Combination heater | | | Yes | Yes | Yes |
| **Rated heat output** | *Prated* | kW | 24 | 24 | 24 |
| Useful heat output at rated heat output and high temperature regime(2) | $P_4$ | kW | 24.0 | 24.0 | 24.0 |
| Useful heat output at 30% of rated heat output and low temperature regime(1) | $P_1$ | kW | 8.0 | 8.0 | 8.0 |
| **Seasonal space heating energy efficiency** | $\eta_s$ | % | 92 | 92 | 92 |
| Useful efficiency at rated heat output and high temperature regime(2) | $\eta_4$ | % | 87.2 | 87.2 | 87.2 |
| Useful efficiency at 30% of rated heat output and low temperature regime(1) | $\eta_1$ | % | 96.8 | 96.8 | 96.8 |
| **Auxiliary electricity consumption** | | | | | |
| Full load | *elmax* | kW | 0.049 | 0.049 | 0.049 |
| Part load | *elmin* | kW | 0.019 | 0.019 | 0.019 |
| Standby mode | $P_{SB}$ | kW | 0.003 | 0.003 | 0.003 |
| **Other items** | | | | | |
| Standby heat loss | $P_{stby}$ | kW | 0.040 | 0.040 | 0.040 |
| Ignition burner power consumption | $P_{ign}$ | kW | - | - | - |
| Annual energy consumption | $Q_{HE}$ | kWh<br>GJ | 20870<br>75 | 20870<br>75 | 20870<br>75 |
| Sound power level, indoors | $L_{WA}$ | dB | 57 | 57 | 57 |
| Emissions of nitrogen oxides | $NO_X$ | mg/kWh | 18 | 18 | 18 |
| **Domestic hot water parameters** | | | | | |
| **Declared load profile** | | | XL | XL | XL |
| Daily electricity consumption | $Q_{elec}$ | kWh | 0.192 | 0.224 | 0.246 |
| Annual electricity consumption | *AEC* | kWh | 42 | 49 | 54 |
| **Water heating energy efficiency** | $\eta_{wh}$ | % | 90 | 92 | 77 |
| Daily fuel consumption | $Q_{fuel}$ | kWh | 21.234 | 20.621 | 25.856 |
| Annual fuel consumption | *AFC* | GJ | 16 | 16 | 19 |

(1) Low temperature means for condensing boilers 30°C, for low temperature boilers 37°C and for other heaters 50°C return temperature (at heater inlet).
(2) High temperature regime means 60°C return temperature at heater inlet and 80°C feed temperature at heater outlet.

**See**
The back cover for contact details.

© Baxi Heating UK Ltd 2015

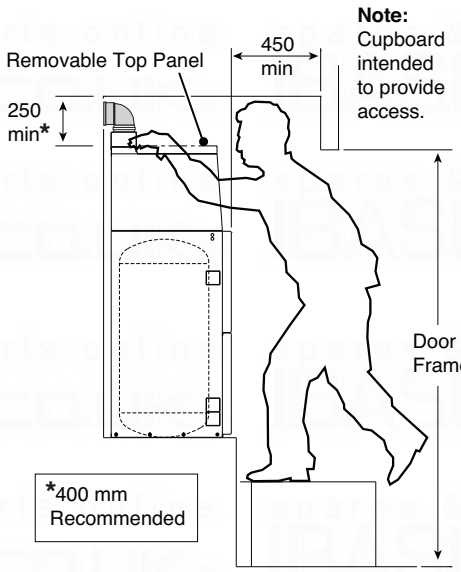


**Note:**
Cupboard intended to provide access.

**Typical Bulkhead Installation with rearwards horizontal concentric flue**

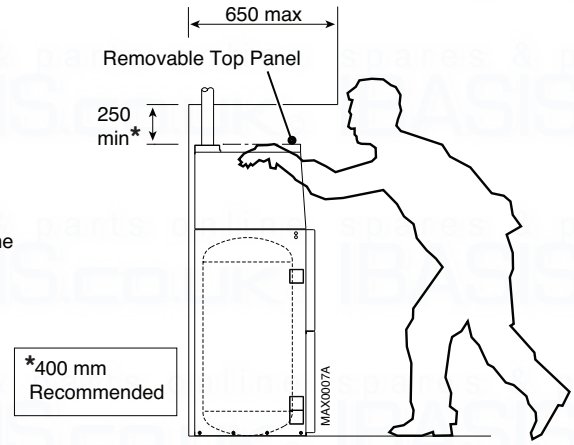


**Note:**
At these minimum clearances above the appliance, adequate working access MUST be provided.

**Typical Cupboard Installation with twin vertical air/flue pipes**

Fig. 2

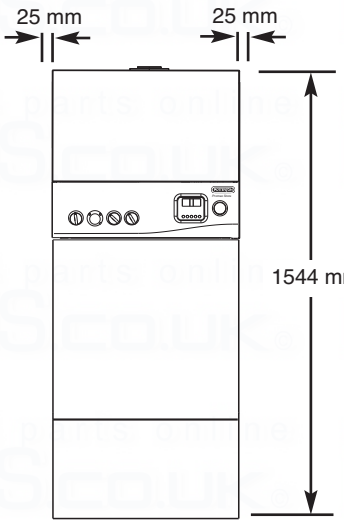


150 Litre Model

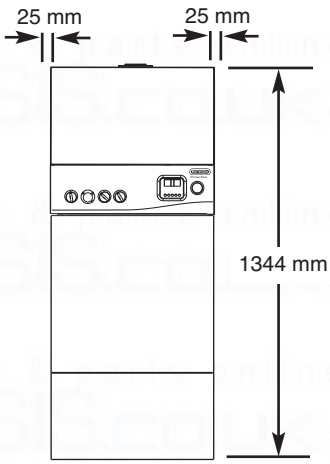


115 Litre Model

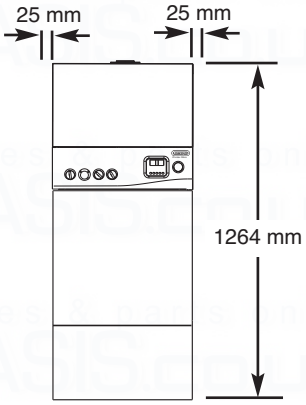


90 Litre Model

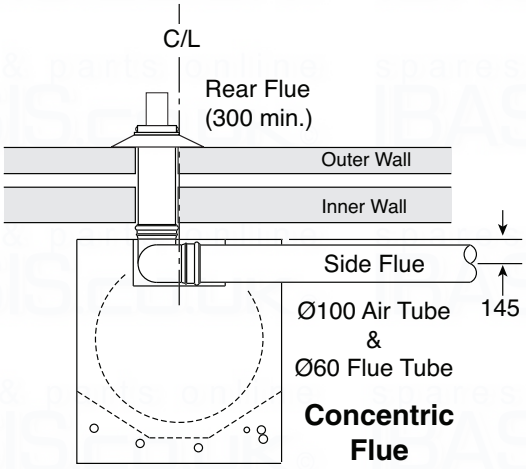


**Concentric Flue**

All dimensions in mm

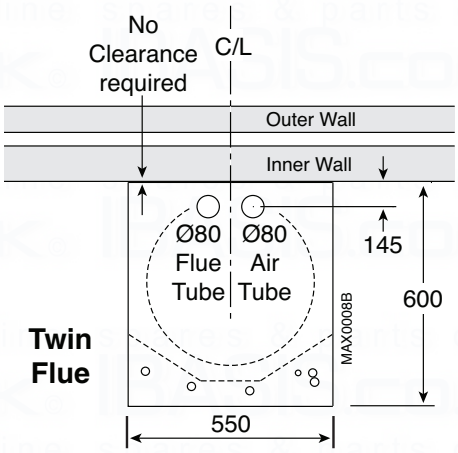


**Twin Flue**

Fig. 3



© Baxi Heating UK Ltd 2015

# Introduction

**Checklist of supplied components:**

Cold water control pack including:
- Expansion Vessel
- Expansion Vessel Bracket
- Expansion Vessel Braided Hose with Seals
- Pressure Reducing Valve (2.5 bar)
- Pressure Relief Valve (8 bar)
- Nuts and Olives
- Tundish
- Bracket

**Important - Installation, Commissioning, Service & Repair**

This appliance must be installed in accordance with the manufacturer's instructions and the regulations in force. **Read the instructions fully before installing or using the appliance.**

In GB this must be carried out by a competent person as stated in the Gas Safety (Installation & Use) Regulations.

Definition of competence: A person who works for a Gas Safe registered company and holding current certificates in the relevant ACS modules, is deemed competent.

In IE this must be carried out by a competent person as stated in I.S. 813. "Domestic Gas Installations".

Read the instructions fully before installing or lighting the boiler.

Promax 24 Store is a floor standing condensing combination boiler which incorporates a hot water store to provide domestic hot water (DHW) and central heating (CH). The DHW temperature is user adjustable (e.g. for summer/winter operation). Operation is automatic and the fully modulating pre-mixed burner ensures that gas is burned cleanly and efficiently within the condensing heat exchanger. An advanced burner control includes flame monitoring, pressure monitoring and other safety features, plus status and diagnostic displays which are large and easy to read.

Installation of this boiler as an unvented hot water system falls within the scope of the Building Regulations 1995 (Part G). These require that installation of an 'unvented' system shall be notified to the local authority Building Control Department; also that the work must be carried out by a competent person as defined in the Approved Document G3. The above requirements do not apply if hot water is obtained via an open vented feed tank.

Samples of the Promax Store gas boilers have been examined by DVGW Technologies Limited, a EU Notified Body. The range is certified to comply with the essential requirements of the Gas Appliance Directive 90/396/EEC, the Low Voltage Directive 72/23/EEC and shows compliance with the Electro Magnetic Compatibility Directive 89/336/EEC, the Boiler Efficiency Directive 92/42/EEC and are therefore permitted to carry the CE Mark.

## Operation

The boiler control works on the principle of "hot water priority" so the central heating output may be temporarily delayed if the hot water temperature drops below the selected temperature e.g. after drawing a hot bath. The selected temperature is user adjustable in the range 45° to 65 °C

To suit conventional radiator based central heating systems, the boiler will normally provide a flow temperature of around 80 °C. The boiler control automatically responds to lower central heating loads by reducing the boiler output (which saves wasteful on-off cycling).

This boiler must be installed into a sealed (pressurised) primary system.

Provision is made for fitting both room and frost thermostats if required. **Note:** The boiler has its own in-built frost protection which will seek to prevent the boiler temperature dropping below 5 °C

For summer operation the user can switch off the central heating at the control panel.

**Visible Pluming**

The efficient condensing operation of Promax Store will naturally cause condensate to form in the flue pipe and pluming of the condensing gases will be visible during all but the most favourable atmospheric conditions. In installations with long flue runs, some condensate may be discharged from the terminal. The flue terminal must, therefore, be sited to avoid nuisance from either phenomenon.

**Delivery & Kits Available**

**Promax Store** boilers are delivered in three packages (1) the heat engine and unvented accessory kit, (2) the hot water cylinder and (3) the flue kit. The flue kit must be ordered/specified additionally to the boiler.

## Health and Safety Information for the Installer and Service Engineer

Under the Consumer Protection Act 1987 and Section 6 of the Health and Safety at Work Act 1974, we are required to provide information on substances hazardous to health.
This boiler does not contain substances harmful to health; it does not contain asbestos. Small quantities of adhesives and sealants used in the product are cured and present no known hazards.

© Baxi Heating UK Ltd 2015

## Codes of Practice

The appliance is suitable only for installation in GB and IE and should be installed in accordance with the rules in force.
In GB, the installation must be carried out by a Gas Safe Registered Installer. It must be carried out in accordance with the relevant requirements of the:

- Gas Safety (Installation & Use) Regulations.
- The appropriate Building Regulations either The Building Regulations, The Building Regulations (Scotland), Building Regulations (Northern Ireland).
- The Water Fittings Regulations or Water Byelaws in Scotland.
- The Current I.E.E. Wiring Regulations.

Where no specific instructions are given, reference should be made to the relevant British Standard Codes of Practice.

In IE, the installation must be carried out by a Competent Person and installed in accordance with the current edition of I.S. 813 "Domestic Gas Installations", the current Building Regulations and reference should be made to the current ETCI rules for electrical installation.

In GB the following Codes of Practice apply:

| Standard | Scope |
|---|---|
| BS6891 | Specification for low pressure gas pipework in domestic premises. |
| BS5440 Pt.1 | Specification for installation of flues. |
| BS5440 Pt.2 | Specification for installation of ventilation for gas appliances. |
| BS5546 | Specification for installation of gas hot water supplies. |
| BS5449 | Specification for forced circulation hot water central heating systems. |
| BS6798 | Specification for installation of gas fired hot water boilers of rated input not exceeding 70kW. |

In IE:
I.S. 813 Domestic Gas Installations.

The following BS standards give valuable additional information:

| | |
|---|---|
| BS6891 | Specification for low pressure gas pipework in domestic premises. |
| BS5546 | Specification for installation of gas hot water supplies. |
| BS5449 | Specification for forced circulation hot water central heating systems. |

**Schematic Diagram**

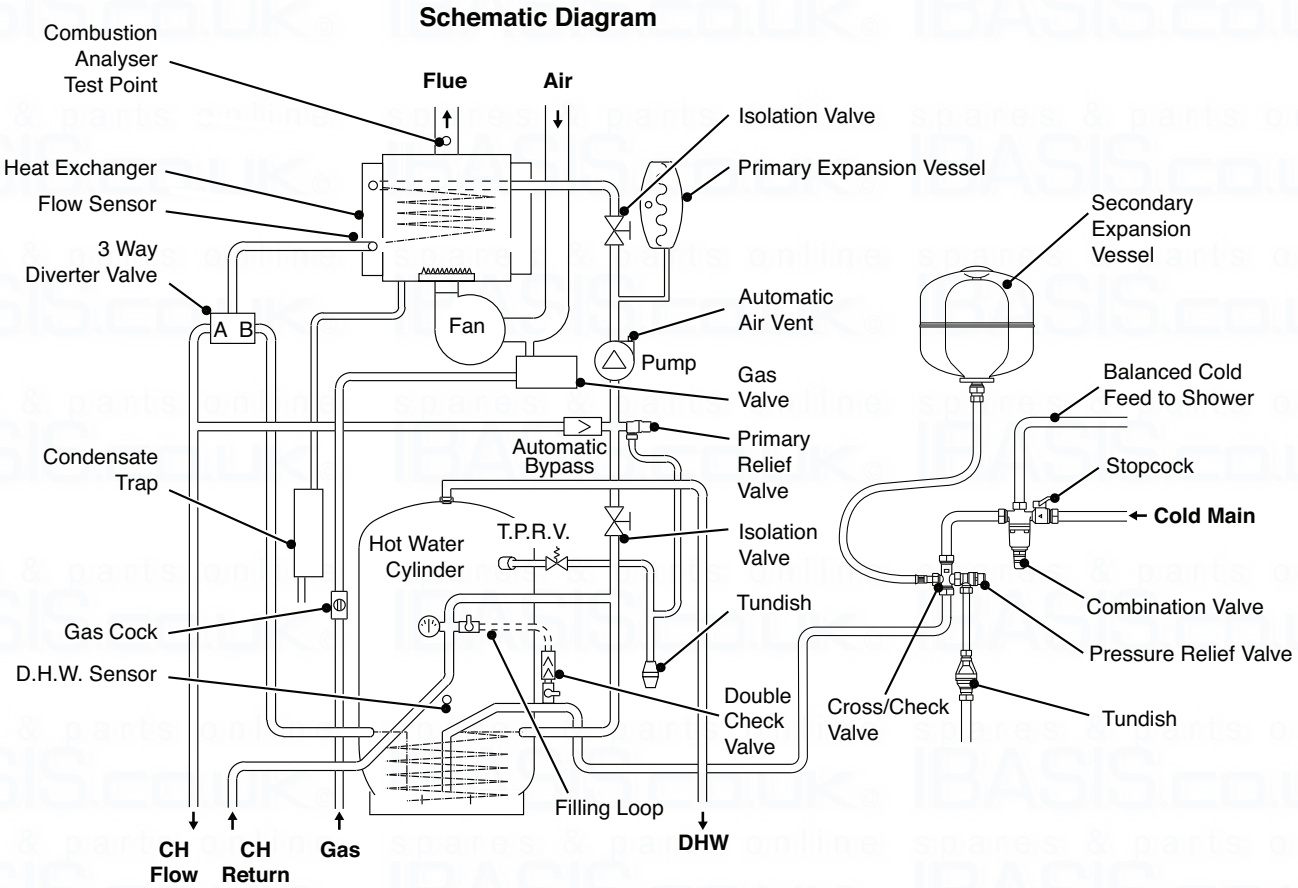


Fig. 4


© Baxi Heating UK Ltd 2015

# 1. Installation Requirements

## Storage, Unpacking & Handling

This boiler is delivered in two sections for safety and ease of handling. Store both the Top (heat engine) and the Bottom (cylinder) under cover in dry conditions.

Remove the Promax 24 Store unvented Accessory Kit from above the heat engine to reduce lift weight. (The front and top panels can also be removed if required - see Fig. 1).

Handholds are provided at the top rear of the heat engine and will assist with removing it from the transport tray. Handholds are provided at both sides and underneath the cylinder.

Use a handling device e.g. sack truck, to manually move either section over long distances. Trucking must be done from the rear. Take particular care to avoid damaging outer panels or programmer.

These items should be lifted and handled by two people. Stooping should be avoided and protective clothing worn when necessary. Carrying and lifting equipment should be used as required for moving Top and Bottom to where they will be assembled and installed..

Determine beforehand whether the Top and Bottom should be assembled to enable the complete unit to be moved into position, or whether to fit the cylinder and then lift the heat engine into position.

The Top has 2 downward facing dowel pins which provide accurate location on to the cylinder. Take care to avoid trapping hands and fingers during assembly.

Take great care when manoeuvring the boiler into its final location and avoid twisting movements of the body. **Do not attempt to carry the complete boiler as the Top is only dowelled to the Bottom.**

Dispose of packaging in accordance with environmental guidelines.

## 1.1 Gas Supply

Entry holes are provided in the base and via knockouts in the side panels.

This boiler requires a natural gas supply of 2.6 cubic metres per hour. A 22 mm gas inlet connection is provided at the front and gas supply pipework of not less than 22 mm diameter should be run to the boiler. The meter and supply pipes must be capable of delivering this quantity of gas in addition to the demand from any other appliances in the house and must be governed at the meter.

The gas installation should be in accordance with the relevant standards. In GB this is BS 6891. In IE this is the current edition of I.S. 813 "Domestic Gas Installations".

The whole of the gas installation must be checked for soundness and purged in accordance with, in GB, BS 6891 and in IE, I.S. 813 “Domestic Gas Installations”.

## 1.2 Electricity Supply

The boiler requires a 230V ~ 50Hz single-phase 3A fused electrical supply. External wiring must be correctly earthed, polarised and in accordance with relevant regulations/rules. In GB this is the current I.E.E. Wiring Regulations. In IE reference should be made to the current edition of the ETCI rules.

Detailed wiring instructions are given in Section 5.

**WARNING: THIS BOILER MUST BE EARTHED**

In the event of an electrical fault after installation of the boiler, preliminary electrical systems checks must be carried out i.e. Earth Continuity, Short Circuit, Polarity and Resistance to Earth.

## 1.3 Location of Boiler

The boiler must not be sited outside or in any outhouse where it could be exposed to the weather.

The boiler must be installed on a flat floor capable of supporting the weight of the unit when full of water – up to 250 kg for the 150 litre model.

It should be sited to minimise the length of flue and to avoid long hot water pipe runs.

The extended flueing capability enables the boiler to be sited well away from an outside wall, thus installation in a first floor cupboard or compartment, basement, utility room or kitchen are all feasible locations.

The location chosen must permit the provision of a satisfactory external flue termination. The location must also provide adequate space for servicing and air circulation.

© Baxi Heating UK Ltd 2015

If floor settlement is likely due to the weight of the boiler, ensure that both the flueing and pipework layouts safely provide sufficient flexibility.

If the boiler is to be fitted in a room containing a bath or shower reference must be made to the relevant requirements.

In GB this is the current I.E.E. Wiring Regulations and Building Regulations.

In IE reference should be made to the current edition of I.S. 813 "Domestic Gas Installations" and the current ETCI rules.

## 1.4 Compartment Installation and Ventilation

General guidance for cupboard/compartment installations, including airing cupboards, is contained in BS 6798. Specific requirements for Promax 24 Store are given below.

1. The compartment should be a fixed rigid structure large enough to allow it and the boiler to be inspected and serviced. A minimum width between the door jambs of 570 mm must be provided.

2. Minimum clearances are indicated in Fig.3. A full height compartment door must be at least 15 mm from the front of the boiler and provide 200 mm access height above the boiler.

3. Householders should be discouraged from storing clothes etc. on the boiler itself. A removable shelf at least 75 mm above the boiler is acceptable.

4. The internal surfaces of an understairs cupboard must be lined with non-combustible materials. The door shall have a BS 476 fire resistance of not less than 0.5 hour.

**VENTILATION**

1. Where the appliance is installed in a cupboard or compartment, no air vents are required.
2. BS 5440: Part 2 refers to room sealed appliances installed in compartments. The appliance will run sufficiently cool without ventilation.

## 1.5 Flueing

This is a “room sealed” condensing boiler. Flue systems are supplied in kits, or components can be ordered individually from Potterton. Only Promax Store flue components (which are designed for condensing operation) can be used.

**Flue Systems**

All boilers are supplied to accept either the concentric horizontal flue system or the Promax 80 mm dia. twin flue system, however several flue system options are available.

Each system is room sealed and offers a choice of flue type and termination method, (pages 15 & 16).

- Concentric balanced flue with horizontal terminal
- Twin flue with vertical terminal *

Flue extension lengths and bends should be purchased separately, as required.

* These terminals must be ordered/specified separately.


© Baxi Heating UK Ltd 2015

## General Requirements for Horizontal Flue Terminations

Detailed recommendations for flueing are given in BS5440: Part 1. The following notes give general guidance. The horizontal balanced flue terminal must be installed so that it is exposed to external air, preferably on a clear expanse of wall. Acceptable positions are indicated in Fig. 5. Avoid positions where the terminal is adjacent to projections; particularly immediately under a balcony, inside a re-entrant position, or immediately adjacent to a drain pipe. If the boiler is fitted under a ventilator or opening window, the terminal must be at least 300 mm from any part of the window or ventilator and in accordance with BS5440: Part 1.

The flue pipe must not be closer than 25 mm to combustible material. Additional clearance must be provided when passing the flue through timber walls. Advice on gas installations in timber framed buildings is contained in IGE technical publication IGE/UP/7 available from the Institution of Gas Engineers, 21 Portland Place, London W1N 3AF.

## Guidance notes for Flue Installation

**Read these Installation Instructions before installing the boiler**. Before starting an installation, check that the correct flue kit has been supplied with the boiler.

Detailed recommendations for flue installations are given in BS 5440:1: 2000. The following notes are for general guidance only.

a) The flue system must be constructed using only Promax approved components.

b) It is important that the position of the terminal allows free passage of air across it at all times.

c) It is ESSENTIAL TO ENSURE that products of combustion discharging from the terminal cannot re-enter the building, or any other adjacent building, through ventilators, windows, doors, other sources of natural air infiltration, or forced ventilation / air conditioning.

d) The minimum permissible dimensions between the flue terminal and obstructions and ventilation openings are specified in the table on page 14 of these instructions.

e) If the flue terminal discharges into a pathway or passageway check that combustion products will not cause nuisance and that the terminal will not obstruct the passageway.

f) Where terminals are fitted within 850 mm of a plastic or painted gutter, or 450 mm of painted eaves, an aluminium shield at least 750 mm long must be fitted to the underside of the plastic or painted surface.

g) Where installation will be in an unusual location, special procedures may be necessary. BS 6798 gives detailed guidance on this aspect.

h) As the Promax Store is a condensing boiler the flue duct must have a fall back to the boiler of at least 1.5°.

j) The efficient condensing operation of the Promax Store will naturally give rise to condensation in the flue gases and **pluming will occur in all but the most favourable atmospheric conditions**. Some condensate may also be discharged from the terminal. The terminal must, therefore, be **sited to avoid nuisance from either phenomenon**.

k) Where the lowest part of the terminal is less than 2 m above the level of any ground, balcony, flat roof or place to which people have access, the terminal must be protected by a guard of durable material.

© Baxi Heating UK Ltd 2015

**IMPORTANT:** If fitting a Plume Displacement Flue Kit, the air inlet must be a minimum of 100mm from any opening windows or doors

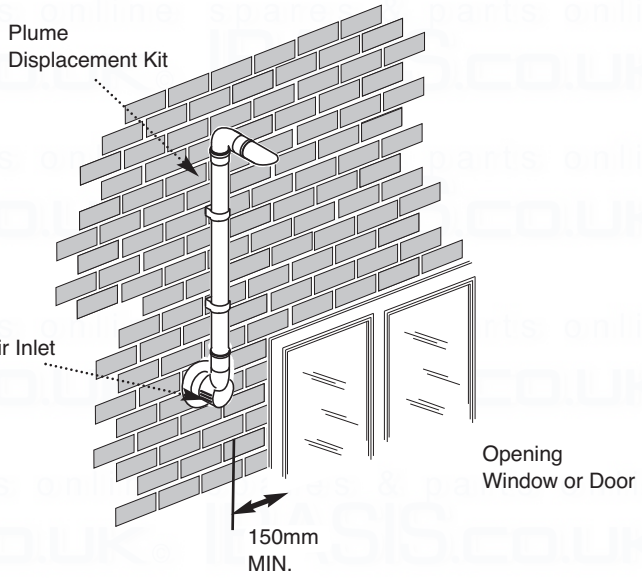


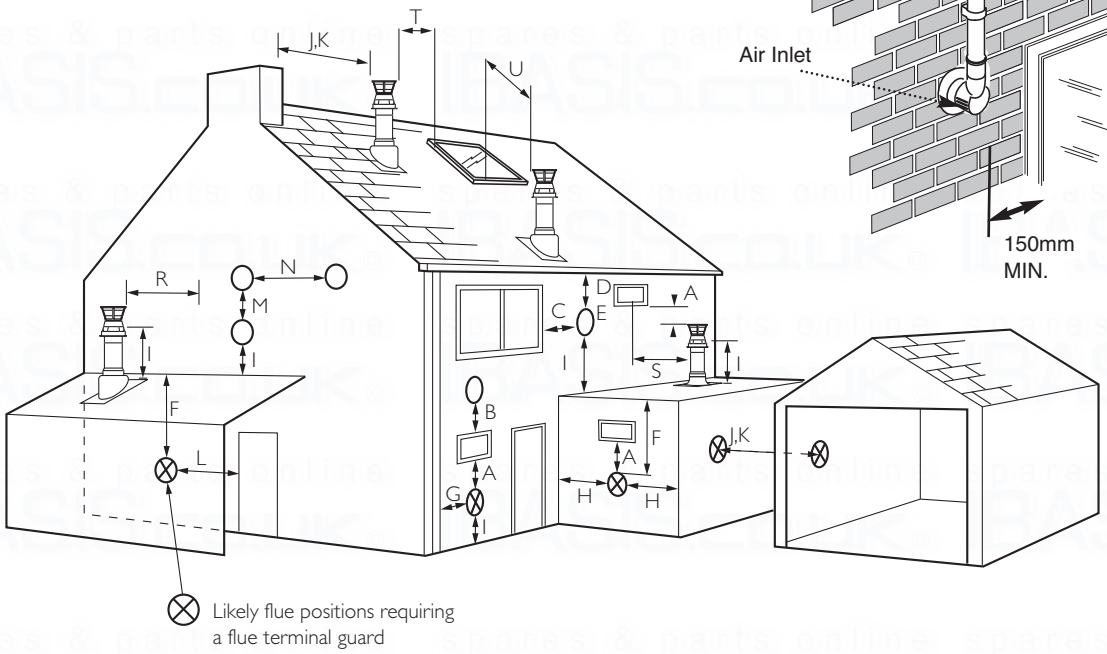


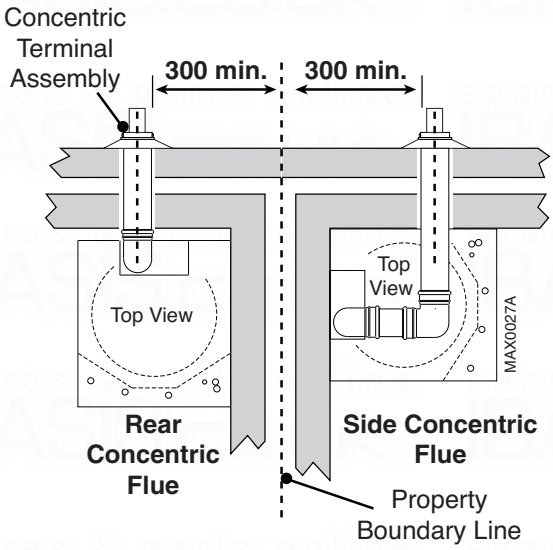


**IMPORTANT:**
- Under car ports we recommend the use of the plume displacement kit.
- The terminal position must ensure the safe and nuisance - free dispersal of combustion products.

Terminal Position with Minimum Distance (mm)
For IE, refer to I.S. 813 "Domestic Gas Installation".

**Fanned Draught Balanced Flue**

| | | |
|---|---|---|
| A[1] | Directly below an opening, air brick, opening windows, etc. | 300 |
| B[1] | Above an opening, air brick, opening window etc. | 300 |
| C[1] | Horizontally to an opening, air brick, opening window etc. | 300 |
| D[2] | Below gutters, soil pipes or drain pipes. | 25 (75) |
| E[2] | Below eaves. | 25 (200) |
| F[2] | Below balconies or car port roof. | 25 (200) |
| G[2] | From a vertical drain pipe or soil pipe. | 25 (150) |
| H[2] | From an internal or external corner. | 25 (300) |
| I | Above ground, roof or balcony level. | 300 |
| J | From a surface or boundary line facing a terminal. | 600 |
| K | From a terminal facing a terminal (Horizontal flue). | 1200 |
| | From a terminal facing a terminal (Vertical flue). | 600 |
| L | From an opening in carport (e.g. door, window) into the dwelling. | 1200 |
| M | Vertically from a terminal on the same wall. | 1500 |
| N | Horizontally from a terminal on the same wall. | 300 |
| R | From adjacent wall to flue (vertical only). | 300 |
| S | From an adjacent opening window (vertical only). | 1000 |
| T | Adjacent to windows or openings on pitched and flat roofs | 600 |
| U | Below windows or openings on pitched roofs | 2000 |

[1] In addition, the terminal should be no nearer than 150 mm to an opening in the building fabric formed for the purpose of accommodating a built-in element such as a window frame.

[2] Only ONE 25mm clearance is allowed per installation. If one of the dimensions D,E,F,G or H is 25mm then the remainder MUST be as shown in brackets, in accordance with BS 5440 Pt. 1.

**Note:** The distance from a fanned draught appliance terminal installed parallel to a boundary may not be less than 300 mm in accordance with the diagram on the left.

Fig. 5


© Baxi Heating UK Ltd 2015

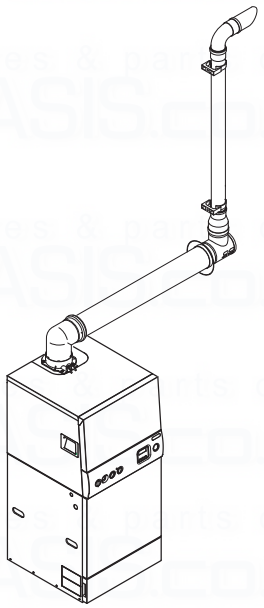

Plume Displacement Kit 60 /100 Ø
1M Extensions, 45° & 93° bends are also available

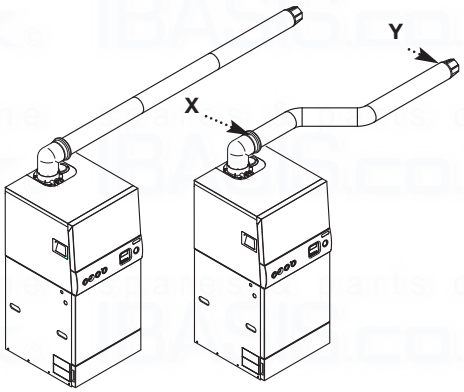


**Horizontal Flues**

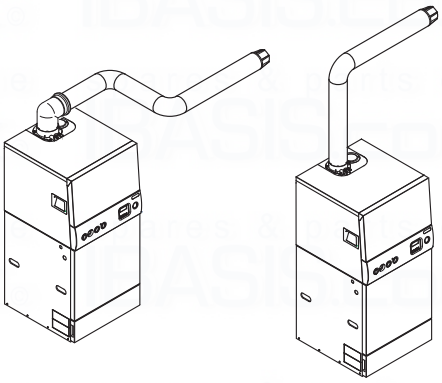

## Flue Options

1. The Promax 24 Store can be fitted with flue systems as illustrated.

2. Maximum permissible equivalent flue lengths are:-

10 metres (60/100 system - vertical & horizontal)
20 metres (80/125 system - vertical & horizontal)
15 metres (80/80 twin pipe)

3. Any additional "in line" bends in the flue system must be taken into consideration. Their equivalent lengths are:-

Concentric Pipes:

| | |
|---|---|
| 45° bend | 0.5 metres |
| 93° bend | 1.0 metres |

Twin Flue Pipe

| | |
|---|---|
| 45° bend | 0.25 metres |
| 91.5° bend | 0.50 metres |

The elbow attached to the boiler is not included in any equivalent length calculations

4. The illustrations opposite show examples of permissible flue systems.

NOTE: Flue length is measured from point X to Y as shown.

**IMPORTANT:** All flue systems must be securely supported at least once every metre. Suitable pipe supports are available as accessories.

**NOTE:** Horizontal flue pipes should always be installed with at least a 1.5° fall from the terminal to allow condensate to run back to the boiler.

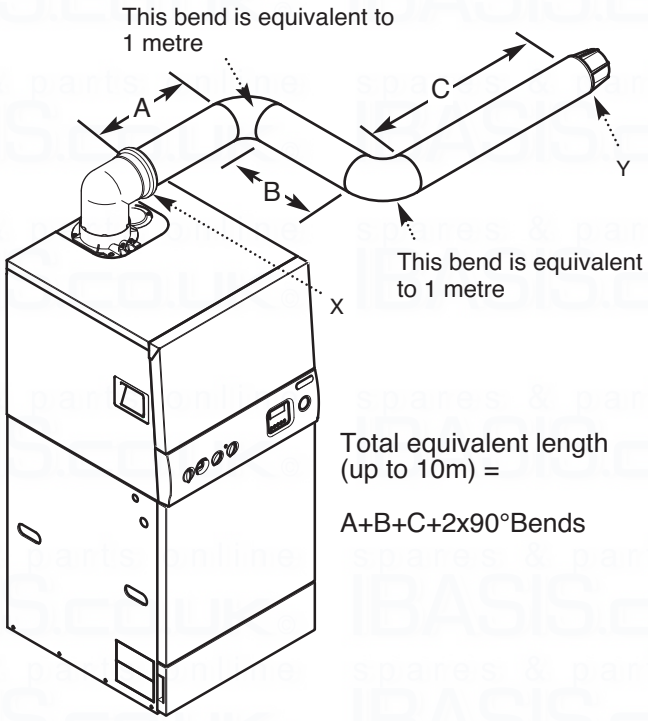


Total equivalent length (up to 10m) =

A+B+C+2x90°Bends

© Baxi Heating UK Ltd 2015

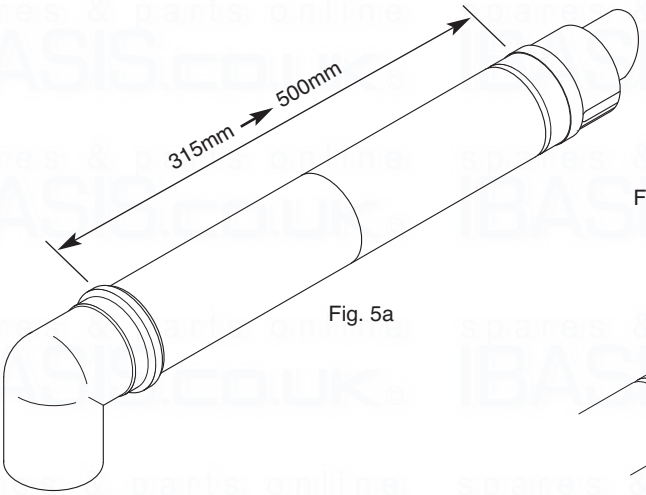


Fig. 5a

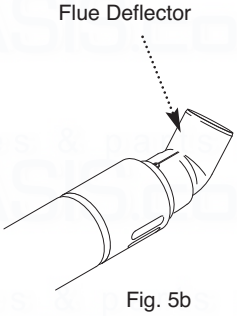


Fig. 5b

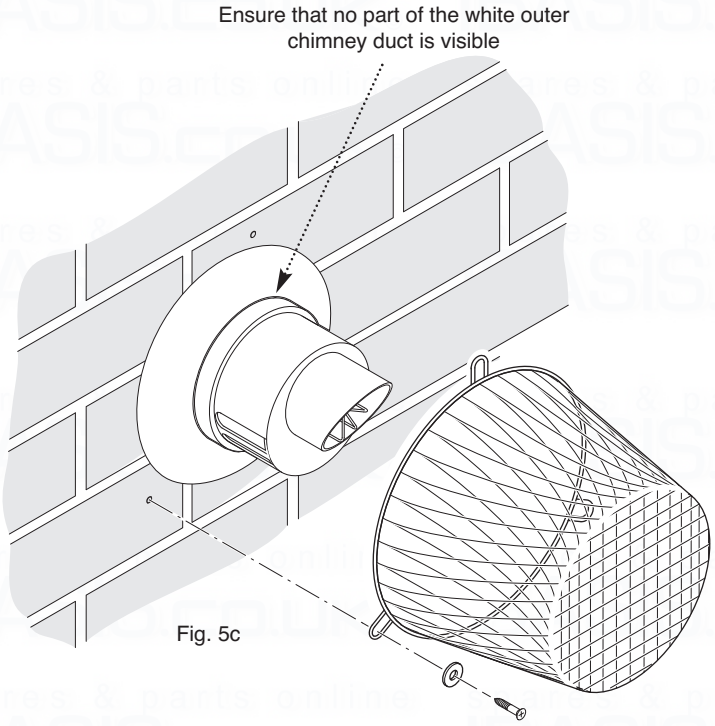


Fig. 5c

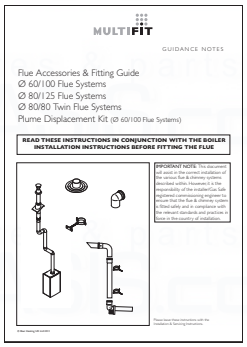


Fig. 5d

## Flue Dimensions

The standard horizontal flue kit allows for flue lengths between 100mm and 685mm from elbow to terminal (Fig. 5a).

The maximum permissible equivalent flue length is:
10 metres (60/100 system)

## Flue Trim

1. The rubber flue trim supplied may be fitted to either the outside wall or on the inner wall of installation.

## Terminal Guard (Fig. 5c)

1. When codes of practice dictate the use of terminal guards, they can be obtained from most Plumbers' and Builders' Merchants.

2. There must be a clearance of at least 50mm between any part of the terminal and the guard.

3. When ordering a terminal guard, quote the appliance name and model number.

4. The flue terminal guard should be positioned centrally over the terminal and fixed as illustrated.

## Flue Deflector (Fig. 5b)

1. If required a flue deflector is available from your Potterton stockist.

2. Push the flue deflector over the terminal end. It may point upwards as shown, or up to 45° either way from vertical. Secure the deflector to the terminal with screws provided.

## Flue Accessories (Fig. 5d)

1. For full details of Flue Accessories (elbows, extensions, clamps etc.) refer to the Flue Installation Guide supplied in the literature pack.


© Baxi Heating UK Ltd 2015

## 1.6 Water Supply

### Mains Supply Requirements

It is essential that the mains supply pressure and available flow rate are capable of meeting demand for both hot and cold water Promax Store is not recommended for unvented use where the dynamic mains pressure is below 1.0 bar.

Unless consistently high mains pressures are available, it is unlikely that a service pipe of less than 25 mm OD (Blue MDPE) will supply an adequate flow rate.

### Plumbing Design

A combination inlet valve group is included with every Promax Store (packed in the "Accessories" box supplied with the Heat Engine). The mains water supply must be connected via the combination reducing valve and the cross fitting, in that order. Both components are clearly marked with the direction of flow (see Fig. 11 page 23).

The cold feed pipe to showers (and other mixer fittings needing balanced pressures) must be taken from the 22mm blanked outlet port of the combination reducing valve (or a tee between this and the cross fitting). The valve can be sited near where the water mains enters the dwelling, to assist with providing reduced pressure to all the system.

Cold water draw-offs that do not require a balanced supply e.g. hose-union or WC cistern, should be teed off upstream of the combination reducing valve.

A 22mm connection is provided from the hot water store. Smaller diameter pipework may be used locally for terminal fittings as part of a balanced design.

Thermostatic shower mixers are recommended to optimise performance; these must be suitable for use at mains pressure. Using flow restrictors will help prolong the showering time available from smaller capacity stores.

### Use in Hard Water Areas

In the UK., water is drawn from diverse sources some of which have high levels of natural hardness. If not dealt with effectively, the scaling associated with hard waters can adversely affect hot water performance. As a general guide, if the temporary hardness exceeds 200 mg/l, then some form of water treatment device is required. The ultimate solution is an ion-exchange (salt regenerated) water softener. In addition to protecting the Promax heat exchanger against the effects of limescale, an ion-exchange softener offers users other benefits and should be specified with an appropriate flow rate capacity.

Water "conditioning" devices such as those which dose the incoming water with food grade polyphosphates can be effective in reducing limescale but require correct siting and regular replenishment to remain operational. They should generally not be fitted where heat could impair their performance. Other types of device can inhibit scale formation but their effectiveness may vary. The manufacturers of any water conditioning device should be consulted regarding its suitability for the application and the particular water supply to the installation address.

Record the type of conditioner being used in "Benchmark" Commissioning Checklist.

### Treatment of Water Circulating Systems

All recirculatory water systems will be subject to corrosion unless an appropriate water treatment is applied. This means that the efficiency of the system will deteriorate as corrosion sludge accumulates within the system, risking damage to pump and valves, boiler noise and circulation problems.

When fitting new systems flux will be evident within the system, which can lead to damage of system components.

All systems must be thoroughly drained and flushed out. Using, for example Sentinel X300 or X400 or Fernox F3. They should be used following the flushing agent manufacturer's instructions.

System additives - corrosion inhibitors and flushing agents/descalers should comply to BS7593 requirements, e.g Sentinel X100 and Fernox MB-1 which should be used following the inhibitor manufacturer's instructions.

Full instructions are supplied with the products, for further information contact Sentinel (0800 389 4670) or Fernox (0870 870 0362)

**Failure to flush and add inhibitor to the system will invalidate the appliance warranty.**

It is important to check the inhibitor concentration after installation, system modification and at every service in accordance with the manufacturer's instructions. (Test kits are available from inhibitor stockists.)

### Sealed Primary Systems

This boiler must be installed into a sealed primary system. As a general guide systems of up to 7-9 radiators will operate satisfactorily with the 10 litre expansion vessel built into the boiler.

- **Guidance on expansion vessel sizing**

  These notes explain how to calculate the total expansion vessel volume required, based on the size and the initial cold fill pressure of the system. If the required volume exceeds that of the vessel fitted to the boiler then an additional vessel should be installed, on the return connection from the heating system. The charge pressure of any additional vessel is assumed to be 1.0 bar, the same as the vessel fitted to the boiler.

© Baxi Heating UK Ltd 2015

If the initial cold fill pressure is 1.0 bar:
expansion vessel size = 0.11 x system volume

This fill pressure will allow the maximum expansion capacity, though any minor loss of water will result in a rapid pressure drop. An additional expansion vessel is only required if the total system volume exceeds 98 litres.

This includes the 4 litre primary circuit volume within the Promax Store boiler - thus radiator and pipework volume should not exceed 94 litres.

**Pipework above boiler**

Air vents must be fitted at the highest positions on flow and return pipes and at any point where air is likely to collect.

**TRV's in System**

An automatic bypass valve is built into the boiler to allow thermostatic radiator valves to be fitted. This can be switched into or out of circuit as required.

## 1.7 Discharge Pipework

It is a requirement of Building Regulation G3 that any discharge from an unvented system is conveyed to where it is visible, but will not cause danger to persons in or about the building. The tundish and discharge pipes should be fitted in accordance with the requirements and guidance notes of Building Regulation G3. The G3 Requirements and Guidance section 3.9 are reproduced in the following sections.
Information Sheet No. 33 available from the British Board of Agrement gives further advice on discharge pipe installation. For discharge pipe arrangements not covered by G3 Guidance or BBA Info Sheet No.33 advice should be sought from either your local Building Control Officer or Potterton.

**G3 Requirement** "...there shall be precautions ... to ensure that the hot water discharged from safety devices is safely conveyed to where it is visible but will not cause danger to persons in or about the building."

**G3 Guidance SECTION 3.9**

The discharge pipe (D1) from the vessel up to and including the tundish is generally supplied by the manufacturer of the hot water storage system. Where otherwise, the installation should include the discharge pipe(s) (D1) from the safety device(s). In either case the tundish should be vertical, located in the same space as the unvented hot water storage system and be fitted as close as possible and within 600 mm of the safety device e.g. the temperature relief valve. **Note: The tundish is factory fitted during manufacture of the Promax Store.** The discharge pipe (D2) from the tundish should terminate in a safe place where there is no risk to persons in the vicinity of the discharge, preferably be of metal and:

**a. be at least one pipe size larger than the nominal outlet size of the safety device unless its total equivalent hydraulic resistance exceeds that of a straight pipe 9m long i.e. discharge pipes between 9m and 18m equivalent resistance length should be at least two sizes larger than the nominal Outlet size of the safety device, between 18 and 27m at least 3 sizes larger, and so on. Bends must be taken into account in calculating the flow resistance. Refer to Fig. 8, Table 1 and the worked example.**

An alternative approach for sizing discharge pipes would be to follow BS 6700:1987 Specification for design installation, testing and maintenance of services supplying water for domestic use within buildings and their curtilages. Appendix E. section E2 and table 21.

b. have a vertical section of pipe at least 300 mm long, below the tundish before any elbows or bends in the pipework.

c. be installed with a continuous fall.

d. have discharges visible at both the tundish and the final point of discharge, but where this is not possible or practical, there should be clear visibility at one or other of these locations. Examples of acceptable discharge arrangements are:

i. ideally below a fixed grating and above the water seal in a trapped gully.

ii. downward discharges at low level; i.e. up to 100mm above external surfaces such as car parks, hard standings, grassed areas etc. are acceptable providing that where children may play or otherwise come into contact with discharges a wire cage or similar guard is positioned to prevent contact, whilst maintaining visibility.

iii. discharges at high level; e.g. into a metal hopper and metal down pipe with the end of the discharge pipe clearly visible (tundish visible or not) or onto a roof capable of withstanding high temperature discharges of water and 3m from any plastic guttering system that would collect such discharges (tundish visible).

iv. where a single pipe serves a number of discharges, such as in blocks of flats, the number served should be limited to not more than 6 systems so that any installation discharging can be traced reasonably easily. The single common discharge pipe should be at least one pipe size larger than the largest individual discharge pipe (D2) to be connected. If unvented hot water storage systems are installed where discharges from safety devices


© Baxi Heating UK Ltd 2015

may not be apparent i.e. in dwellings occupied by blind, infirm or disabled people, consideration should be given to the installation of an electronically operated device to warn when discharge takes place.

**Note:** The discharge will consist of scalding water and steam. Asphalt, roofing felt and non-metallic rainwater goods may be damaged by such discharges.

**Worked example of discharge pipe sizing**

The example below is for a G1/2 temperature relief valve with a discharge pipe (D2) having 4 No. 28mm elbows and length of 7 m from the tundish to the point of discharge.

From Table 1:
Maximum resistance allowed for a straight length of 22mm copper discharge pipe (D2) from a G1/2 temperature relief valve is 9.0 m.

Subtract the resistance for 4 No. 22 mm elbows at 0.8m each = 3.2 m.

Therefore the permitted length equates to: 5.8 m.

5.8 m is less than the actual length of 7 m therefore calculate the next largest size.

Maximum resistance allowed for a straight length of 28 mm pipe (D2) from a G1/2 temperature relief valves equates to 18 m.

Subtract the resistance of 4 No. 28 mm elbows at 1.0 m each - 4.0 m.

Therefore the maximum permitted length equates to: 14 m.

As the actual length is 7 m, a 28 mm min. (D2) copper pipe will be satisfactory.

**Warnings**

- Under No circumstances should the factory fitted Temperature/Pressure Relief Valve be removed other than by Authorised Potterton personnel. To do so will invalidate any warranty or claim.
- The cold water Inlet Control Group must be fitted to the mains water supply to the Promax Store when it is operated as an unvented system.
- Control and safety valves MUST NOT be tampered with.
- The discharge pipe MUST NOT be blocked or used for any other purpose.
- The tundish must not be removed but can be sited outside the RH panel using the opening provided.
- Electrical components must not be sited near the tundish.

| Valve outlet size | Minimum discharge pipe D1 | Minimum discharge pipe D2 from tundish | Maximum resistance allowed, expressed as a length of straight pipe (i.e. no elbows or bends) | Resistance created by each elbow or bend |
|---|---|---|---|---|
| G1/2 | 15 mm | 22 mm<br>28 mm<br>35 mm | up to 9 m<br>up to 18 m<br>up to 27 m | 0.8 m<br>1.0 m<br>1.4 m |
| G3/4 | 22 mm | 28 mm<br>35 mm<br>42 mm | up to 9 m<br>up to 18 m<br>up to 27 m | 1.0 m<br>1.4 m<br>1.7 m |
| G1 | 28 mm | 35 mm<br>42 mm<br>54 mm | up to 9 m<br>up to 18 m<br>up to 27 m | 1.4 m<br>1.7 m<br>2.4 m |

Table 1. Sizing of copper discharge pipe (D2) for common temperature relief valve outlet sizes. **Note:** shaded area is reproduced for completeness but does not apply to this boiler.

Typical Discharge Pipe Arrangement

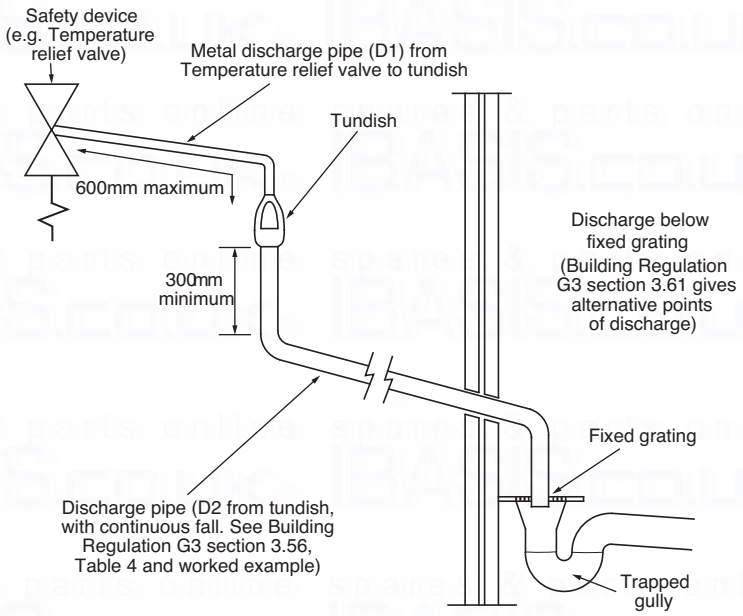


Fig. 8

© Baxi Heating UK Ltd 2015

# 2. Installation

## 2.1 Install the boiler

Before starting an installation, check that the correct flue kit and correct capacity cylinder have been supplied.

**Important: When soldering plumbing fittings, do not allow flame from blowtorch to come into contact with the insulating foam or other non-metallic parts.**

Guidance on where to locate the boiler is given in Sections 1.3 and 1.5. ***In some instances it will be advantageous to pre-plumb pipework or to pre-fix terminal, air/flue pipes and duct***.

1. Remove top and front panels (see Fig. 1) and carefully set aside.
2. Determine boiler final position. The cutaway in the cylinder base allows pipework to be brought up from below floor level. Use the dimensions below or the **template on the reverse of the Installation Guide** to pre-drill any holes. Pipes must not obstruct service access to the immersion heater (if fitted) or to the condensate trap.
3. Move boiler into position. The need to move as Top and Bottom sections or as a complete assembly will depend on the individual installation. The Top has 4 downward facing dowel pins which provide accurate location on to the cylinder. Take care to avoid trapping hands and fingers during assembly.
4. **Apply sealant to cone faces** of both 22mm Union Nuts (see Fig. 10). Remove cardboard pipework support. Attach the 15mm x 90° branch pipe joining the two relief valves/tundish.
5. Remove the DHW temperature sensor from the boiler fitting kit and uncoil it.
6. Drop down the boiler facia panel. Identify the electrical connection end of the DHW temperature sensor (‘A’ in Fig.9b).
7. Connect sensor end ‘A’ to the two-pin connector (green wires) from the control box (Fig.9c).
8. Route the sensor cable behind the cylinder pipes and insert end ‘B’ fully (approx. 310mm) into the cylinder pocket (Fig.9a).
9. Remove small knock-outs as required either side of casing for plumbing access. The handholds in the side panels can also be used. Further access holes allow the condensate to be routed via the LH panel and the DHW to be plumbed via the RH panel.

## 2.2 Connect the Flue System

1. Install the flue system as shown in accordance with these installation instructions and the flue accessory guide, observing additional instructions supplied with any flue accessory.

## 2.3 Connect the Gas Supply (Fig. 9a)

1. Ensure that the gas supply is isolated.
2. The gas connection to the boiler is 22 mm.
   Refer to Section 1.1 for information on the required gas supply. ***Do not turn the gas supply on at this stage.***

Fig. 9b

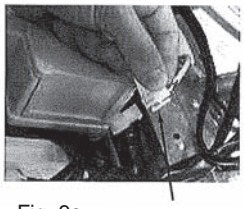


Fig. 9c

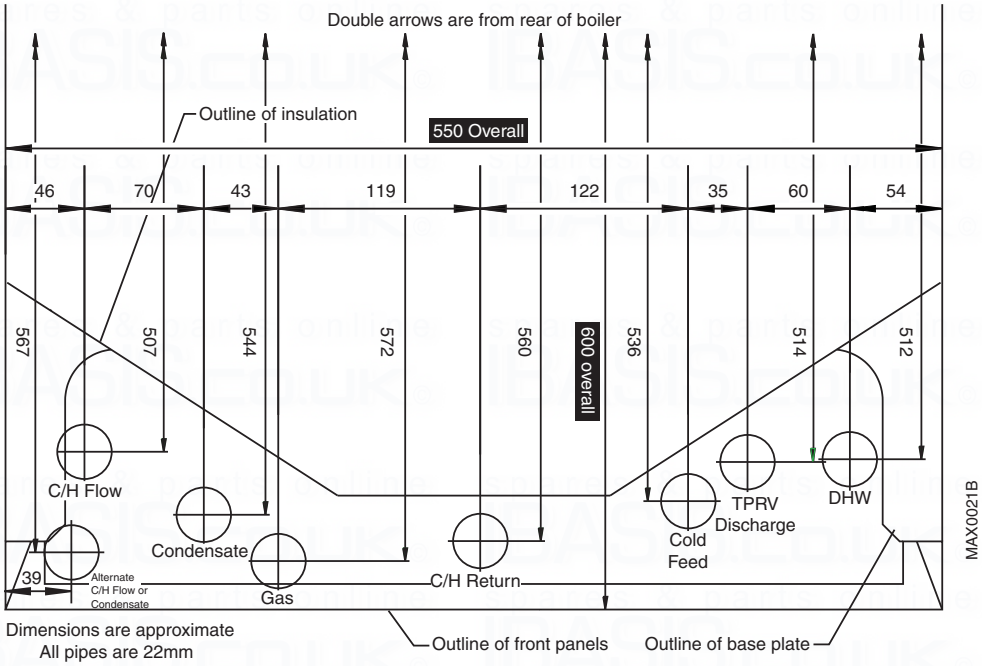


Fig. 9

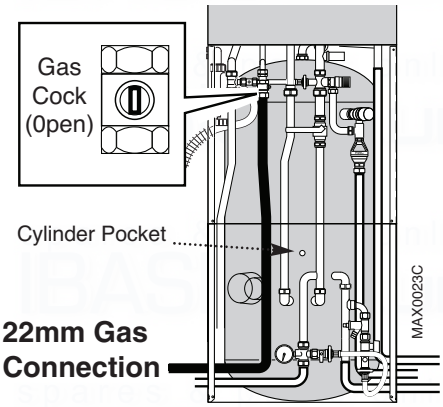


Fig. 9a



© Baxi Heating UK Ltd 2015

## Component & Connection Identification

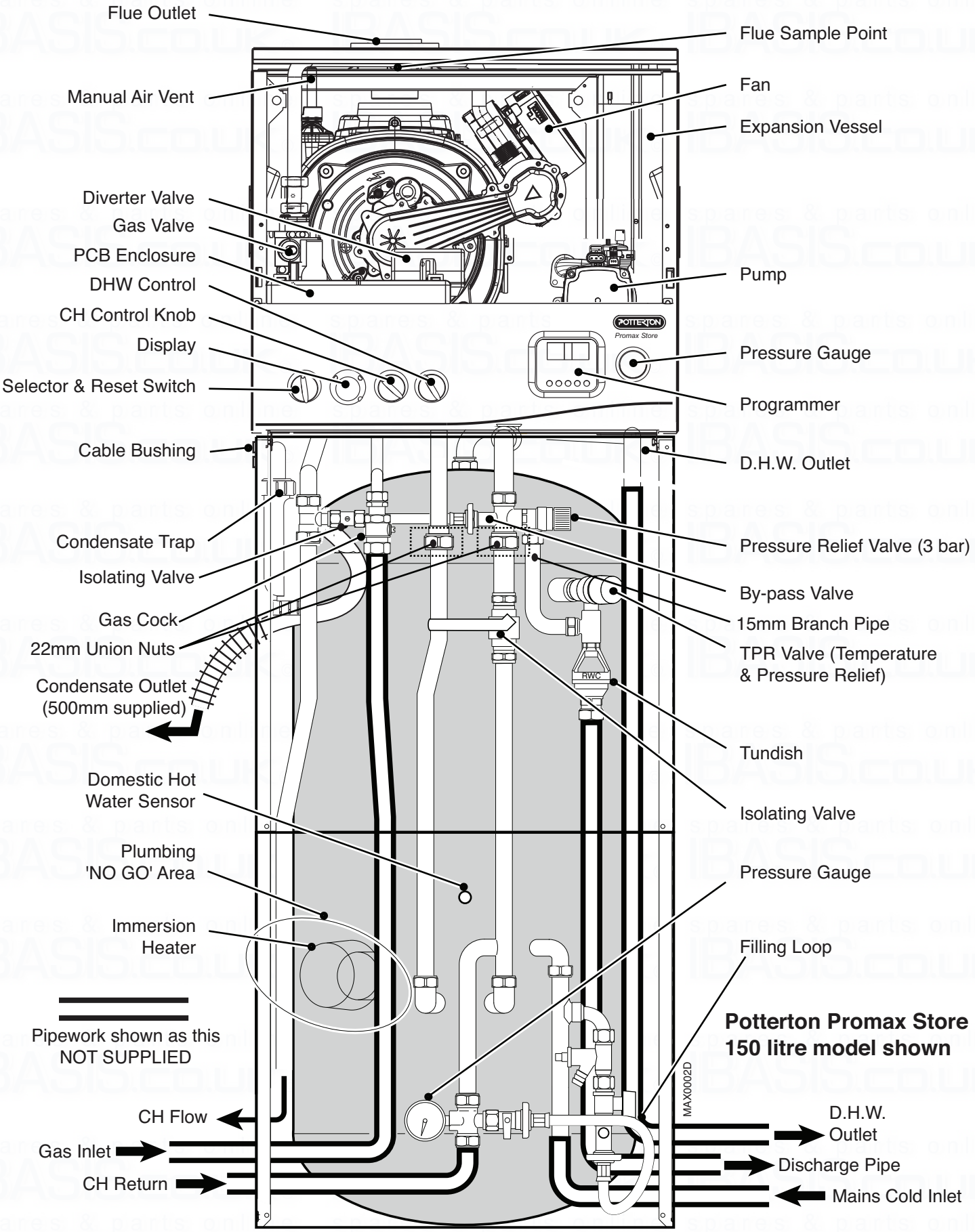


Fig. 10

© Baxi Heating UK Ltd 2015

## 2.4 Condensate Drain Pipe

Before fitting, fill the condensate trap with water.

Fit the steady bracket (with round hole) for the condensate trap to the lower pair of holes in the left hand cylinder side panel. Snap the C-shaped bracket into the groove in the condensate connector. Insert the condensate trap into the steady bracket and fit the C-shaped bracket to the upper pair of holes in the left hand cylinder side panel.

Ensure that the washer seal is in place as indicated and tighten the large nut.

The condensate pipe should be run in 21.5/22.0 mm diameter plastic material suitable for operation at 60° C. Solvent weld PVC overflow is recommended or a PP system can be used. Copper tube must not be used. Do not use push-fit plastic pipe.

Use the flexible pipe provided to connect to 21.5mm PVC pipe; alternatively a Marley or Plumb Center elbow can be used to direct the condensate pipe through the LH side panel (see Fig. 10a). When using the Osma PVC overflow system, a 3/4 -to-22mm adaptor No. 158 may be required.

Internal pipework should have a bore diameter no smaller than 14 mm.
External pipework should be kept to a minimum, and have a bore diameter no smaller than 32 mm.
Ideally the condensate pipe should be run internally to the house soil and vent stack or to a waste pipe. Alternatively, the condensate may be discharged into the rainwater system, or a purpose-built soakaway.
All connecting drainage pipework must have a fall of at least 50 mm per metre run. It is recommended that the pipe is insulated if run externally to minimise the effects of freezing.
**NOTE:** Connection of a condensate pipe to a drain may be subject to local building regulations.

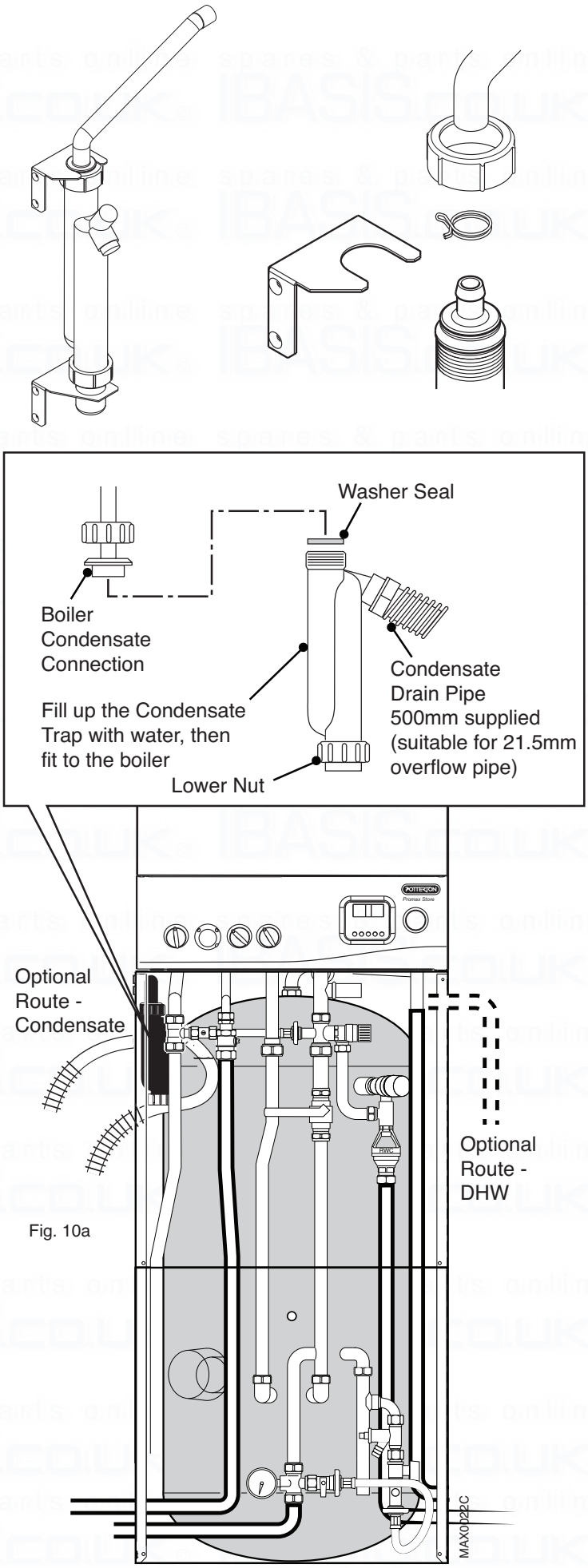

Fig. 10a

### Manual Air Vent

Using the manual air vent, **thoroughly vent air from top of the heat exchanger** when filling the system to save time during the boiler commissioning. **Note:** 1/4" dia. manometer tube fits the manual vent.

### Central Heating Pump & System By-pass

The central heating pump is factory fitted and an automatic system by-pass is provided. The boiler can be used in systems controlled by thermostatic radiator valves (TRVs) but it is essential that the by-pass isolating valve is fully open.

The circulating pressure and flowrate available for the central heating system is shown opposite with the by-pass in circuit.


© Baxi Heating UK Ltd 2015

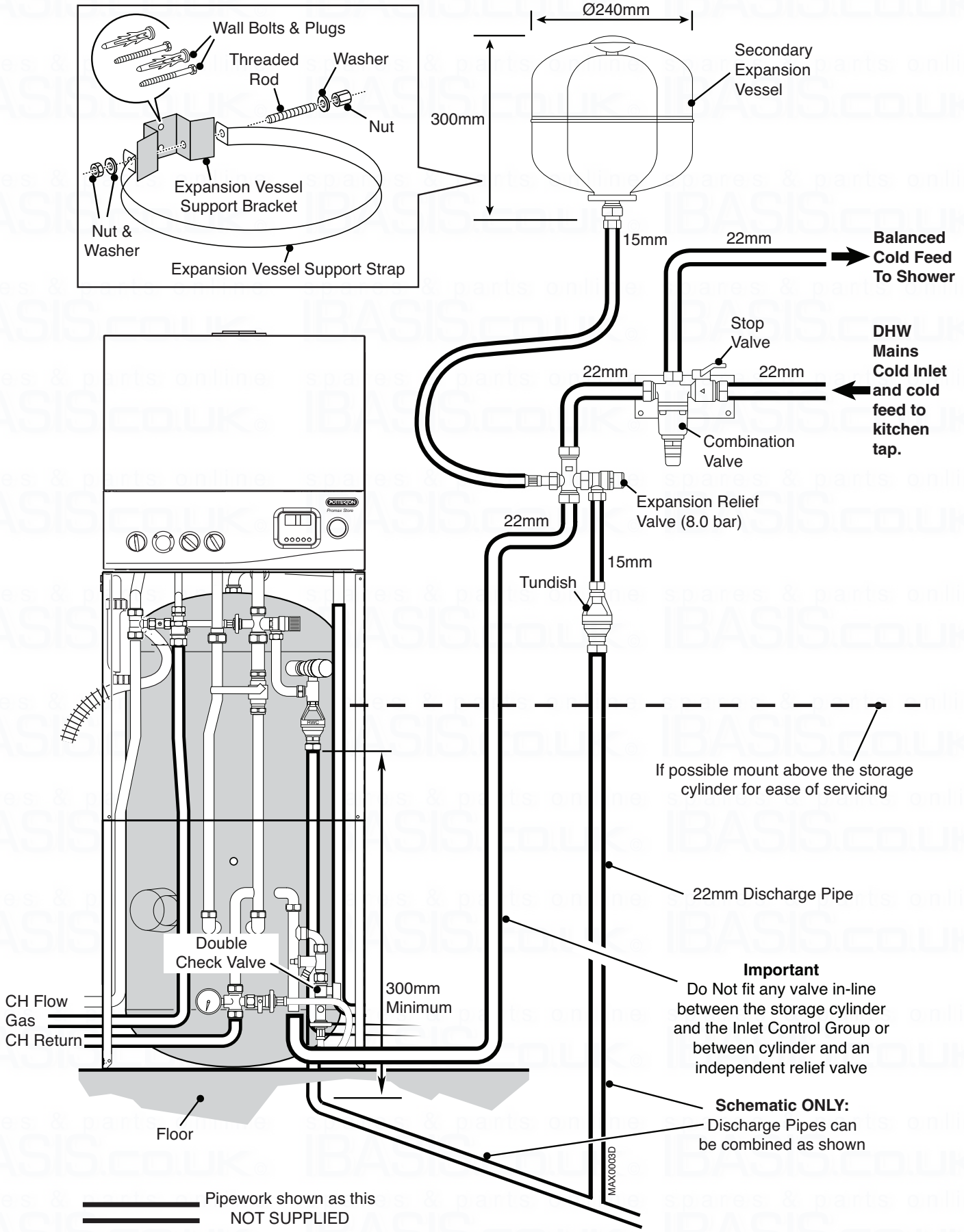


Fig. 11

© Baxi Heating UK Ltd 2015

**Graph of Central Heating Head vs. Flow**

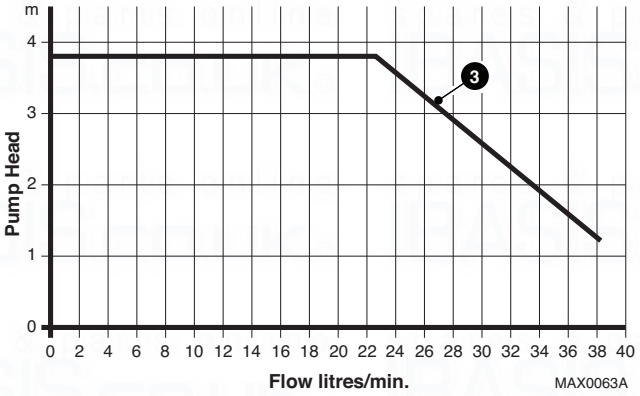


### Secondary Circulation

A pumped secondary circuit, if required, can be connected by teeing into the 22 mm DHW Outlet pipe and the 22 mm Cold Inlet pipe. **Note:** This is not recommended for models having a secondary store of less than 150 litres.

A single check valve (spring loaded type) should be fitted in the return from the secondary circuit. All component parts of a secondary circuit must be suitable for operation at temperatures up to 65 °C and pressures up to 8 bar.

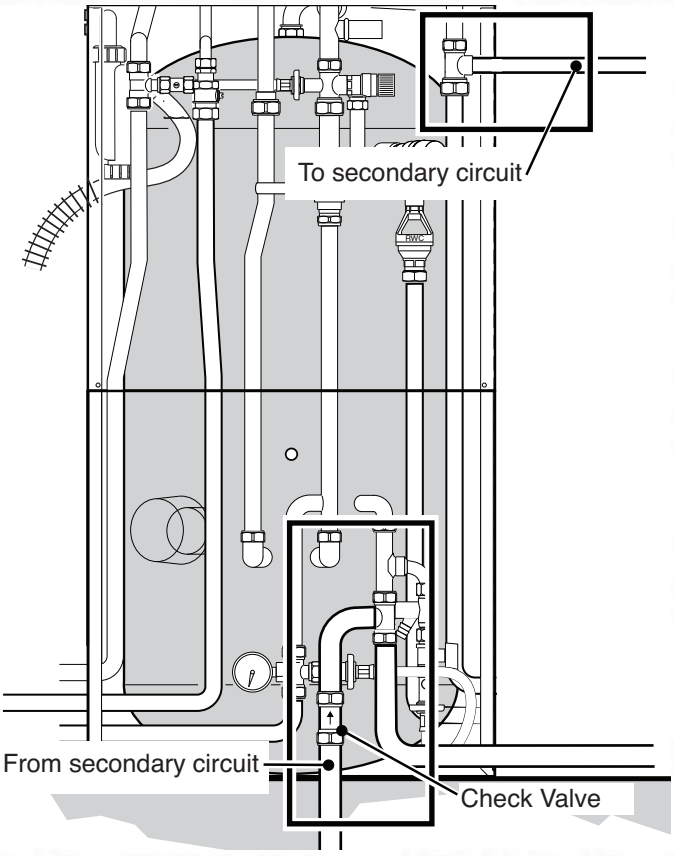


Fig. 12

## 2.5 Connect the Water System

Read and observe recommendations in Section 1.6 and see Fig. 11.

Secure the combination reducing valve - a wall bracket is provided in the accessory pack. 22mm copper tube is recommended for both the inlet and outlet connections. A 22mm balanced pressure outlet is built-in to this valve for supplying showers etc. It can be sited away from the boiler e.g. where the water mains enters the dwelling, to assist with providing reduced pressure to all the system.

Position the cross fitting c/w with expansion relief valve downstream of the reducing valve-see Fig. 11. Ensure the flow direction is correct - arrows indicate the direction of flow. Connect the tundish within 50cm of the relief valve. NB The valve can be rotated to give the best pipe run to the tundish.

Select a location for the expansion vessel within reach of the 1m flexible connector and fix the expansion vessel using the bracket provided. Avoid sharp bends or “kinks” in the flexible connector and ensure there is service access to the checking/charging point.

Future servicing operations will be simplified if the cross fitting/relief valve and the expansion vessel can be sited above the DHW store as indicated in Fig. 11.

### CH System Connections

The flow connection is on the LH side of the unit. The 22mm flow pipe supplied with the cylinder provides clearance for future maintenance of the immersion heater. Ensure this pipe is pushed fully home into the “Techtite” joint. The return connection is low down at the front centre.

### Pressure Relief Valve (Primary)

A pressure relief valve set at 3.0 bar is fitted to the Heat Engine’s primary circuit. Trim the supplied 15mm branch pipe to length before fitting - See Fig. 10.

## 2.6 Connect the Power Supply

WARNING – THIS BOILER MUST BE EARTHED

Wiring must comply with the current IEE Wiring Regulations. The supply cable must be 3-core 0.75sq. mm (24/0.2 mm) to BS6500 Table 16.
The supply must be of 230V – 50Hz. A 3A-fused double pole-isolating switch may be used, having a minimum contact separation of 3 mm in both poles, providing it serves only the boiler and its system controls. Alternatively a 3A 3 pin fused plug may be used.


© Baxi Heating UK Ltd 2015

## Making The Electrical Connections

To connect the mains input cable proceed as follows:-

1. Remove all the outer panels.

2. Completely undo the screws securing the facia panel and hinge it down.

3. Remove the control box cover securing screws. Disengage the barbs on the control box from the cover. Remove the cover.

4. Insert the cable through one of the grommets at the top of the LH cylinder panel and route it to the terminal block.

5. Slacken the screws in the terminal block, connect the input cable, and tighten the screws.

**NOTE:** Both the Live and Neutral connections are fused.

6. If a room thermostat is to be connected it can be done at this point. Run the input cable from the thermostat through the second cable grommet in the cylinder side panel. Refer to the instructions supplied with the control.

**IMPORTANT:** The room thermostat MUST be suitable for 230V switching.

7. Remove the link between terminals 1 & 2. The 230V supply at terminal 1 can be connected to the thermostat. The switched output from the thermostat must be connected to terminal 2. If the room thermostat being used incorporates an anticipator it MUST be wired as shown in the diagram.

8. Ensure that both mains input and, where fitted, external control input cables have sufficient slack to allow the control box to drop down.

9. The boiler is fitted with a programmer that is powered up when the selector switch is in the ( ) combined heating/hot water, or ( ) hot water only positions. Although unpowered when the selector knob is in the “0” position, operating times are retained in the programmer memory. Full details of how to set up and use the programmer are in the User’s Instructions.

10. An external frost ‘stat, if required, must be wired in parallel with the room thermostat but will only be effective when the programmer central heating channel is set to the 24HR operating position. **Ensure that the user is aware of this limitation.**

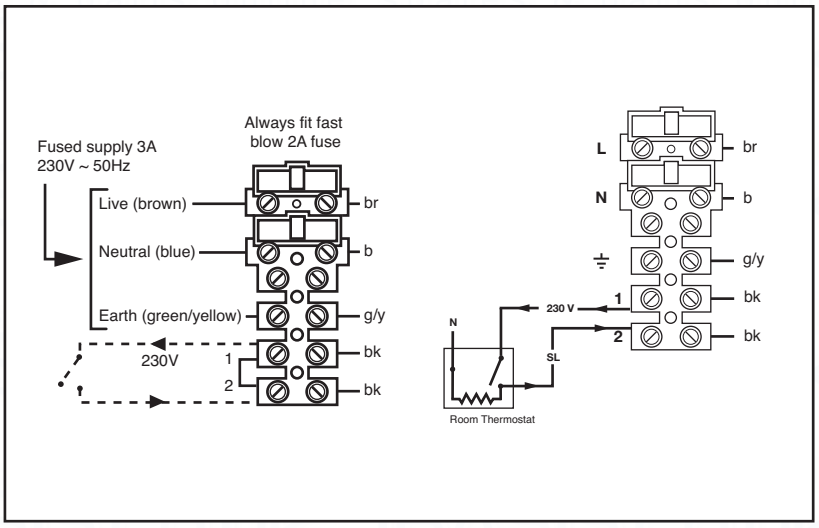


Fig. 13

## Preliminary Electrical Checks

1. Prior to commissioning the boiler preliminary electrical system checks should be carried out.

2. These should be performed using a suitable meter, and include checks for Earth Continuity, Resistance to Earth, Short Circuit and Polarity.

© Baxi Heating UK Ltd 2015

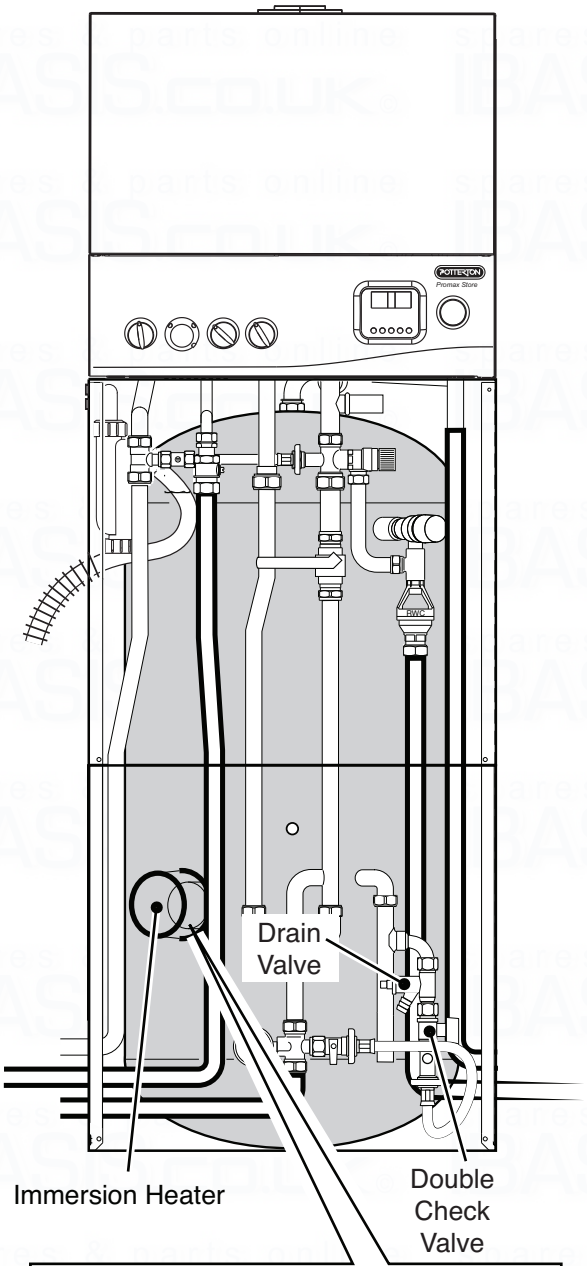


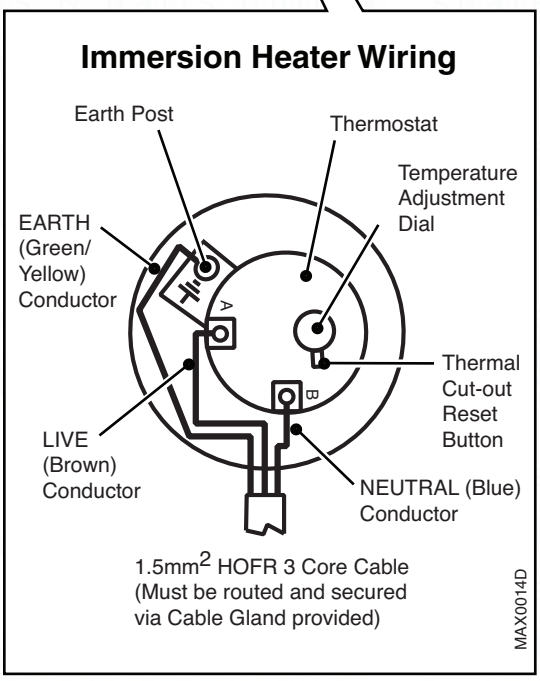


Fig. 14

### 2.7 Immersion Heater

The immersion heater is rated 3kW at 240V and must be wired to a separate, suitably rated electrical supply. THERE MUST BE NO INTERCONNECTION WITH THE WIRING TO THE BOILER.

**WARNING: THE IMMERSION HEATER MUST BE EARTHED.**

It should be installed in accordance with the current IEE Wiring Regulations and be wired through a double pole isolating switch or suitable controller with a contact separation of at least 3mm in both poles. The immersion heater must be fully immersed and not switched on dry.

#### 2.7.1 Wiring the immersion heater

The immersion heater must be wired with 85°C rubber insulated HOFR sheathed flexible cable with a conductor cross sectional area of 1.5mm$^2$ complying with BS6141 Table 8.

Remove the immersion heater cover by removing the securing nut and pulling the cap away from the cylinder. The Live (Brown) conductor should be connected directly to the thermostat terminal marked A. The Neutral (Blue) conductor should be connected directly to the thermostat terminal marked B. The earth conductor should be connected to the threaded post on the bracket marked ⏚ .

The supply cable outer sheath must be routed through the cable gland supplied and secured by tightening the gland after fitting. Ensure the connections to the immersion heater are not under any strain before tightening.

Re-fit the protective cover over the immersion heater assembly and secure by the nut previously removed tightened onto the end of the threaded post where it emerges through the cover.

#### 2.7.2 Operation

The immersion heater is controlled by the rod type thermostat supplied. DO NOT USE ANY OTHER TYPE OF THERMOSTAT.

A temperature setting of 60 to 65°C is recommended and is factory preset (between position 4 and 5 on the adjustment dial). This should be reduced to 55°C (position 3 on dial) in hard water areas.

The thermostat incorporates a thermal cut-out which cuts the power to the immersion heater in an overheat situation. Should this operate it can be manually reset by pressing the red button to the side of the temperature adjustment dial.
**Note:** Investigate the cause of over-heating and rectify before resetting.


© Baxi Heating UK Ltd 2015

### 2.7.3 Maintenance Requirements

Unvented hot water systems have a continuing maintenance requirement in order to ensure safe working and optimum performance. It is essential that the relief valve(s) are periodically inspected and manually opened to ensure no blockage has occurred in the valves or discharge pipework.

Similarly cleaning of the strainer element and replacement of the air in the expansion vessel will help to prevent possible operational faults.

The maintenance checks described below should be performed by a competent person on a regular basis, e.g. annually to coincide with boiler maintenance.

After any maintenance, please complete the relevant Service Interval Record section of the Benchmark Checklist on page 54 of this document.

### 2.7.4 Inspection

The immersion heater boss can be used as an access for inspecting the cylinder internally.

### 2.7.5 Safety Valve Operation

Manually operate the temperature/pressure relief valve for a few seconds. Check water is discharged and that it flows freely through the tundish and discharge pipework. Check valve reseats correctly when released.
**NOTE: Water discharged may be very hot!** Repeat the above procedure for the Expansion Relief Valve.

### 2.7.6 Strainer

Turn off the cold water supply, boiler and immersion heaters. The lowest hot water tap should then be opened to de-pressurise the system. Remove the pressure reducing cartridge to access the strainer mesh. Wash any particulate matter from the strainer under clean water. Re-assemble ensuring the seal is correctly fitted. DO NOT use any other type of sealant.

### 2.7.7 Descaling Immersion Heater

Before removing the immersion heater the unit must be drained. Ensure the water, electrical supply and boiler are OFF before draining. Attach a hosepipe to the drain cock having sufficient length to take water to a suitable discharge point below the level of the unit. Open a hot tap close to the unit and open drain cock to drain unit. Switch OFF electrical supply to the immersion heater before removing the cover. Open the cover to the immersion heater housing and disconnect wiring from immersion heater. Carefully remove the thermostat capillaries. Remove the terminal shroud. Unscrew immersion heater backnut and remove immersion heater from the unit.

A key spanner is supplied with the cylinder unit for easy removal/tightening of the immersion heater. Over time the immersion heater gasket may become stuck to the mating surface. To break the seal insert a round bladed screwdriver into one of the pockets on the immersion heater and gently lever up and down.

Carefully remove any scale from the surface of the element. DO NOT use a sharp implement as damage to the element surface could be caused. Ensure sealing surfaces are clean and seals are undamaged, if in doubt fit a new gasket.

Replace immersion heater ensuring the (right angled) element hangs vertically downwards towards the base of the unit. It may be helpful to support the immersion heater using a round bladed screwdriver inserted into one of the thermostat pockets whilst the backnut is tightened. Replace the terminal shroud. Replace thermostat capillaries into pockets. Connect wiring to element. Check, and close and secure immersion heater housing cover.

### 2.7.8 Expansion Vessel Charge Pressure

Remove the dust cap on top of the vessel. Check the charge pressure using a tyre pressure gauge. The pressure (with system de-pressurised) should be 0.25MPa (2.5 bar). If it is lower than the required setting it should be re-charged using a tyre pump (Schrader valve type). DO NOT OVER-CHARGE. Re-check the pressure and when correct replace the dust cap.

### 2.7.9 Re-Commissioning

Check all electrical and plumbing connections are secure. Close the drain cock. With a hot tap open, turn on the cold water supply and allow unit to refill. DO NOT switch on the immersion heater(s) or boiler until the unit is full. When water flows from the hot tap allow to flow for a short while to purge air and flush through any disturbed particles. Close hot tap and then open successive hot taps in system to purge any air. When completely full and purged check system for leaks. The heating source (immersion heater(s) or boiler) can then be switched on.

© Baxi Heating UK Ltd 2015

### 2.8 How to Drain Hot Water Storage Cylinder

Isolate mains water supply at stop valve on Inlet Control Group and close ¼-turn valve (handle at 90° to valve body) on double check valve - see Fig. 14.

Fit a hosepipe to the tail of the drain valve (secure with “Jubilee” clip), and run open end to a low level where water can be safely drained.

Open nearest tap(s) fully (to allow air to enter cylinder) before opening the drain valve above hose. **Note:** The lower the open end of the hose, the faster will be the draining effect.

When refilling: check that the secondary expansion vessel pre-charge pressure is between 2.5 to 2.7 bar and allow water to flow freely before closing tap(s).

## 2.9 Control Panel, Displays & Diagnostics

The boiler control fitted to Promax Store has been designed to provide safe, reliable and economical operation of the boiler - see Fig. 15 for a guide to the control panel.

Fault finding, during both commissioning and subsequent maintenance is much simplified by the clear display of lockout and error codes which appear in the ‘Status/Error Code Display’. What the codes represent and the remedial actions required are explained on Page 47.

Full details of how to set up and use the programmer are in the User’s Instructions.

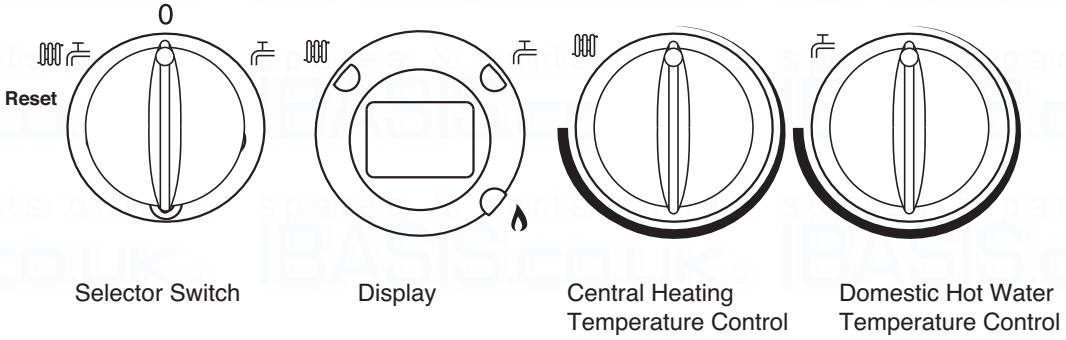


Fig. 15


© Baxi Heating UK Ltd 2015

# 3. Commissioning

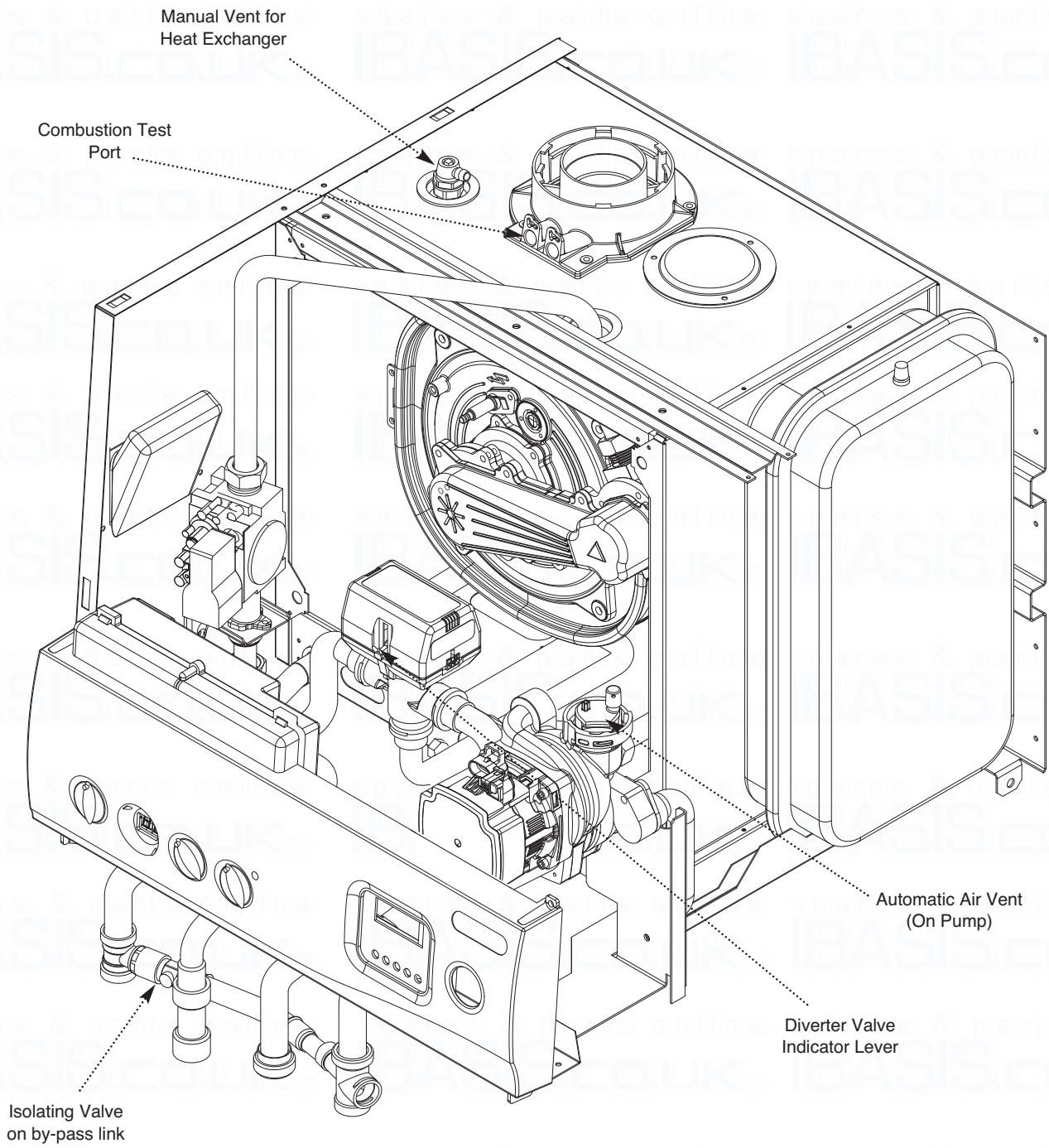


Fig. 16

**Important**
The commissioning and boiler adjustment must only be carried out by a suitably qualified person. Potterton offer this service on a chargeable basis.

**Important**
When checking for gas soundness open all windows and doors in the room.
Extinguish all naked lights, cigarettes, pipes, etc.

© Baxi Heating UK Ltd 2015

### 3.1 Commission the Boiler

**Automatic Air Vent:** This is built into the pump. Leave the cap open during and after commissioning.

**Manual Air Vent:** This must be used to remove as much air as possible before firing the burner.

**Warning: Do not attempt to start this boiler unless the primary circuit has been filled with water.**

**Preliminary Electrical System Checks**

These checks must be carried out prior to attempting to start the boiler. They are, Earth Continuity, Short Circuit, Polarity & Resistance to Earth.

**Flush the System**

The system must be flushed in accordance with BS7593 and the flushing agent manufacturer's instructions. Further guidance can be obtained from BS5449 Section 5.

**Gas Soundness**

Purge and test for soundness in accordance with BS6891 or I.S. 813. The inlet pressure test point of the gas valve is indicated opposite. The appliance gas cock operation is shown in Fig. 9A page 20.

**Unvented Domestic Hot Water System**

1. Open one or more hot water taps.
2. Turn on mains water supply and observe air free water issuing from tap(s)
3. Close tap(s) and check mains water pipework for leaks
4. Check that all factory-made plumbing connections are tight and leak free (and have not loosened in transit).
5. Manually operate both the Temperature & Pressure Relief Valve and the secondary pressure relief valve and ensure that the discharge from these valves emerges safely. Close them again with a "snap" action.

   Guideline times for the initial heat-up and recovery for a nominal 50 °C temperature rise (e.g. 15 °C - 65 °C) within the store are:

| Unit | Heat-up | Recovery* |
|---|---|---|
| 90 Litre | 18 min. | 15 min. |
| 115 Litre | 22 min. | 18 min. |
| 150 Litre | 30 min. | 23 min. |

   * From previous draw-off of 70% of volume.

**Sealed Primary System**

1. Ensure that gas supply is turned OFF at the gas cock.

2. Leave the boiler switched OFF at the selector switch but turn both the CH and DHW control knobs clockwise.

3. Move the indicator lever on the diverter valve head to the mid position and push in so that it "latches".

4. Check that the isolating valve on the by-pass link is OPEN (slot in-line with body).

5. Attach a length of hose to the outlet of the manual vent (1/4" manometer tube is suitable). Open the vent using a radiator key.

6. Open the automatic air vent cap (above the pump) by one turn. Check that filling loop is connected and supplied with water.

7. Open both valves on the filling loop and fill system with water. Allow water to flow from the manual vent until air is no longer discharged.

8. Turn the (LH) selector switch clockwise to the DHW position and use the HW/ENTER button on the programmer to select hot water on ALL DAY or 24HR
**NOTE:** Full details of how to set up and use the programmer are in the User's Instructions.

9.The pump and diverter valve should now operate allowing more air to be expelled. (Free the pump spindle if it appears to be sticking).

10. The boiler control will go to lockout after about a minute. Close the manual vent. Reset using the selector knob, turn the gas ON and allow the boiler to start heating the cylinder contents.

11. After approx. 5 minutes, central heating can be selected by using the selector switch and programmer.

12. If a fault is suspected, consult the list of Error Codes on page 47.

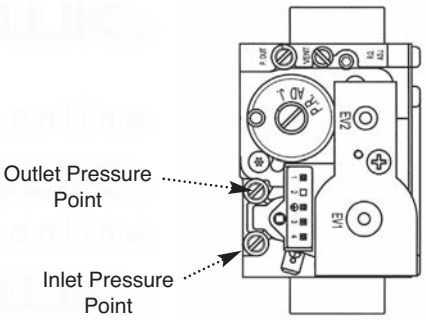



© Baxi Heating UK Ltd 2015

## Commissioning the Boiler - Combustion Check

1. Reference should be made to BS:EN 12828 & 14336 when commissioning the boiler.

2. At the time of commissioning, complete all relevant sections of the Benchmark Checklist at the rear of this publications.

3. Having checked:
- That the boiler has been installed in accordance with these instructions.
- The integrity of the flue system and the flue seals.
- The integrity of the boiler combustion circuit and the relevant seals.

Proceed to put the boiler into operation as follows:

4. **The Combustion Check procedure as shown by the chart on the next page is mandatory. The method of setting the boiler to operate at maximum and minimum rates to comply with the procedure is described below.**

5. Ensure that all external controls are calling for heat. The actual current boiler temperature is shown on the display.

6. Turn both control knobs fully anticlockwise, then quickly turn the right hand knob 1/4 clockwise twice and back fully anticlockwise.

7. The display will now alternate between ‘SF’ and the current boiler temperature and both green LEDs will flash.

8. To set to maximum rate.
Turn the left hand knob fully clockwise. As the knob is turned the display will change, indicating the fan speed.

9. The display will show ‘00’, indicating maximum rate, then revert to ‘P ‘ alternating with the current boiler temperature.

10. To set to minimum rate.
Turn the left hand knob fully anti-clockwise. As the knob is turned the display will change, indicating the fan speed. When the display reads ‘ 0’ the boiler runs at minimum rate.

11. This function is maintained for 20 minutes unless the maximum CH temperature is exceeded. The function can be disabled at any time by turning the right hand knob.

© Baxi Heating UK Ltd 2015

## Checking Combustion

1. Follow the flow chart opposite.

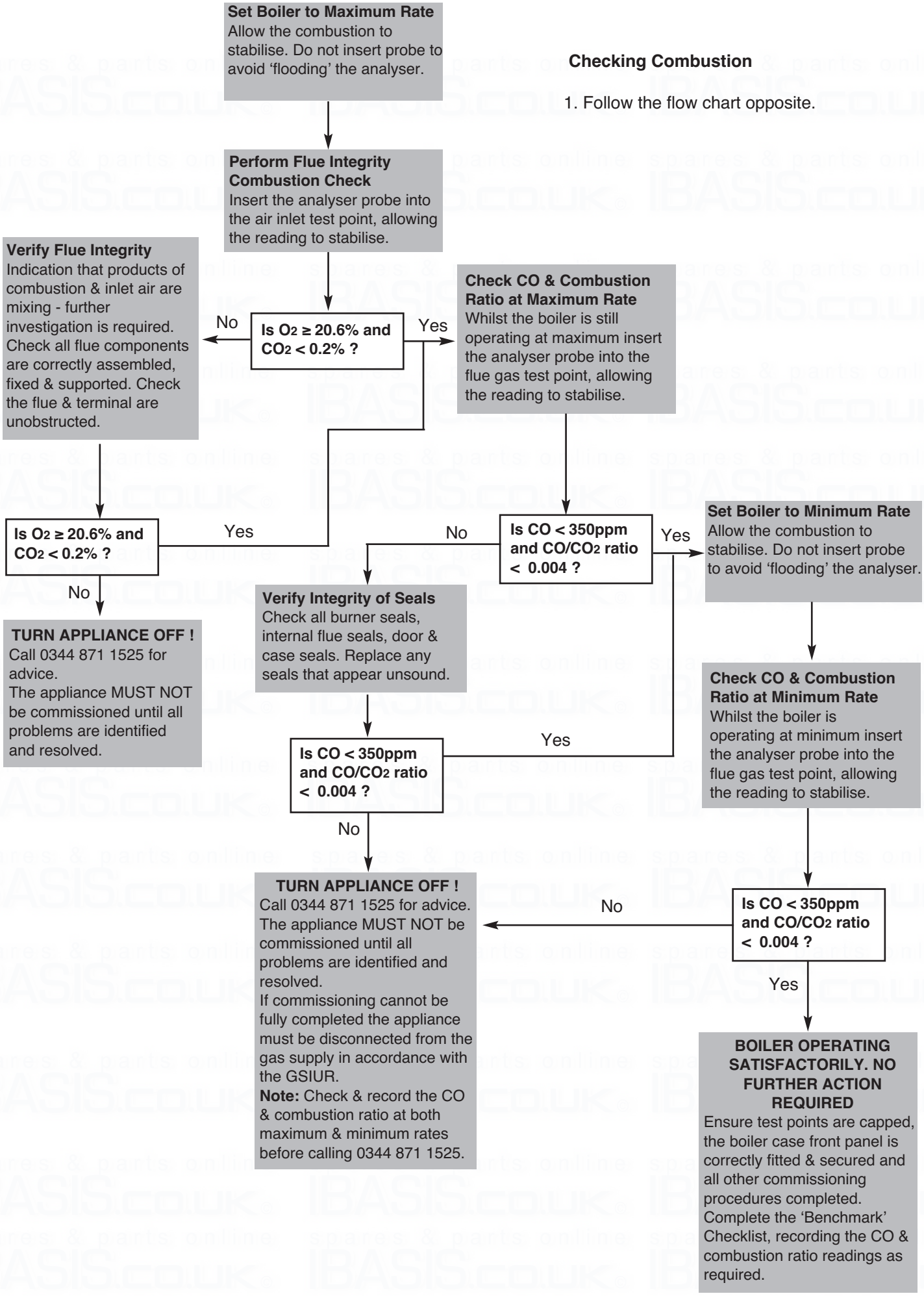



© Baxi Heating UK Ltd 2015

**Check the Operational (Working) Gas Inlet Pressure**

1. The gas valve is factory set and the burner pressure changes as the fan modulates when demand on the boiler alters. There are two important gas rates that relate to a corresponding burner pressure that can be checked as verification during a gas rate check.

| | Burner Pressure (mb) | Gas Rate ($m^3$/hr) | CO (ppm) | $CO^2$ (%) |
|---|---|---|---|---|
| Min Gas Rate | 0.6 - 0.8 | 0.7 - 0.74 | 2 - 30 | 8.4 - 8.8 |
| Max Gas Rate | 6.8 - 7.2 | 2.48 - 2.74 | 30 - 100 | 8.7 - 9.2 |

2. If necessary the gas rate may be checked after running the boiler for 10 minutes with any other appliances and pilot lights turned off.

3. Ensure that the integral programmer and any external controls are calling for heat, and the selector switch is in the central heating and hot water position. The current boiler temperature is shown on the display.

4. To check the gas rate it is necessary to set the boiler to 'Calibration Mode'.

To carry out this operation
5. Turn both temperature control knobs fully anticlockwise, then quickly turn the DHW temperature knob ¼ turn clockwise twice and back fully anticlockwise.

6. The display will now alternate between 'SF' and the current boiler temperature and both green LEDs will flash.

8. Turn CH temperature control knob fully clockwise. As the knob is turned the display will change from '0' to '00' indicating maximum rate, then revert to 'P' alternating with the current boiler temperature.

9. With the boiler operating in the maximum rate condition check that the operational (working) gas pressure at the inlet gas pressure test point is in accordance with B.S. 6798 & B.S. 6891.

10. Ensure that this inlet pressure can be obtained with all other gas appliances in the property working.

**Measure the Gas Rate**
11. With any other appliances & pilot lights turned OFF the gas rate can be measured.

12. A gas rate measurement may now be made. Approximate values are:-

Max 2.61 $m^3$/hr Min 0.74 $m^3$/hr

13. The 'Calibration Function' is active for 20 minutes unless the maximum CH temperature is exceeded.

14. The function can be disabled at any time by turning the DHW temperature knob.

**Central Heating System**

1. Press programmer CH button to select heating (indicated by red neon).
2. Check that any connected room thermostat is calling for heat.
3. Note that when HW is selected the 3-way diverter valve does not allow circulation to the CH circuit until the storage cylinder contents have reached the selected temperature. After filling with cold water, this will normally take between 20 to 25 minutes.
4. With flow to the CH circuit, bleed every radiator and the pipework high points until all air or air/water mix has been removed.

N.B. Leave the cap on the auto air vent (above the pump) partially unscrewed so that the vent remains operational - note that the burner control goes to safety shut-down if the system pressure drops below 0.5 bar.

**IMPORTANT:** Do not vent the boiler with the burner running or damage to the heat exchanger may result.

5. Wait until the central heating circuit has reached its normal temperature of approx. 80 °C before balancing the radiators in the usual way to achieve a temperature drop of 10 °C.
6. Allow system to reach full temperature (all radiators at working temp.) and note "hot system" pressure. Switch boiler off, drain and flush the system.
7. Refill (using a suitable inhibitor) and remove all air and air/water mix. Check the relief valve is not "letting" by observing pipe outlet for several minutes. ("Letting" is usually due to debris on valve seat. Snapping the valve open-shut a few times will normally cure this).
8. Check that the system final pressure equals "hot system" pressure as noted in 7. above. Adjust if necessary.
9. Set the room thermostat or programmer according to the manufacturer's instructions.
10. Disconnect filling loop flexible hose and leave in a secure place for householder.

**Domestic Hot Water System**

1. With the cylinder fully heated, check DHW output temperature is approximately 45 to 65 °C (as selected) using nearest tap and a flow rate of approximately 5 l/min. Record inlet and outlet temperatures in Benchmark Checklist.
2. Measure hot water flow rate at bath tap (fully open) and record in Benchmark Checklist.
3. Refit outer covers in reverse order.

## 3.2 Hand Over to the User

1. Explain the boiler controls
2. Give guidance if the system is to be shut down for long periods when freezing is possible
3. Advise the User that for continued efficient and safe operation of the boiler it is important that annual servicing is carried out.
4. Explain how to re-start boiler if red neon indicates lockout.
5. Hand over the User's Instructions.
6. Carefully read and complete all sections of the Benchmark Commissioning Checklist at the rear of this publication that are relevant to the appliance and installation. These details will be required in the event of any warranty work. The publication must be handed to the user for safe keeping and each subsequent regular service visit recorded. For IE, it is necessary to complete a "Declaration of Conformity" to indicate compliance to I.S. 813. An example of this is given in I.S. 813 "Domestic Gas Installations". This is in addition to the Benchmark Commissioning Checklist.

© Baxi Heating UK Ltd 2015

# 4. Service & Replacement of Parts

To ensure safe, efficient operation of the boiler, it is necessary to carry out routine servicing at regular intervals. The frequency of servicing will depend upon the particular installation conditions and the use to which the boiler is put.

**Important: Before commencing any servicing or exchange of components, always turn off the gas supply and isolate the electricity supplies (i.e. to boiler and immersion heater).**

Annual servicing is recommended. After completing any service work always test for gas soundness and ***Remember to fill in the Benchmark Checklist.***

To gain access to the boiler for servicing, remove front panel and top cover as described in Section 4.1.

## Annually

**Important**: Any 'O' rings, seals, gaskets or washers disturbed during service or replacement of parts must be visually inspected and replaced if worn or damaged.

1. Remove outer and inner top covers to gain access to heat exchanger etc. Inspect components within compartment, checking that joints are dry etc.

2. Remove the heat exchanger door complete with burner, see Section 4.14. Inspect the burner, combustion chamber and heat exchanger, carefully clean using a vacuum cleaner. DO NOT separate the burner from the heat exchanger door. Inspect the electrode condition and check gap which should be 4.5 - 5.5mm.

3. Withdraw the ionisation probe, clean with wire wool or similar abrasive, replace if necessary. Re-fit heat exchanger door.

4. Partially open vent on top of heat exchanger and release any trapped air. Check that the cap on the auto air vent (on top of pump) is partially unscrewed.

5. Draw hot water from a bath tap if necessary to cause burner to light. Check ignition is smooth and visually inspect flame. Continue to draw water until maximum fan speed is attained. Check combustion, see 'Combustion Testing'.

6. Turn off the mains water supply at the Inlet Control Group and release system pressure by opening a hot tap. Using hexagon key provided, remove the pressure reducing cartridge from the Inlet Control Group. Clean the cartridge and strainer in running cold water. Re-fit the cartridge ensuring that the strainer is correctly located.

7. With no water pressure in the system, check and if necessary adjust the secondary expansion vessel pressure to approx. 2.5 to 2.8 bar (36 to 40 psi). **NOTE:** Vessel pressure can not be accurately set with water pressure in system.

8. Restore pressure to DHW system. Manually operate, in turn, the expansion relief valve (part of Inlet Control Group) and the temperature & pressure relief valve (Fig. 10). Check that the discharge route(s) is unobstructed and that water flows freely to a safe, visible location. Check that both valves close correctly.

9. Release CH system pressure via relief valve and check primary expansion vessel pre-charge pressure is between 1.0 to 1.2 bar. Adjust if required and top up system to same pressure.

10. Check for gas soundness and re-assemble in reverse order.

11. Clean condensate trap by removing lower nut (see section 2.4 Fig. 10a).

## Combustion Testing

A combustion analysis test point is provided on the flue outlet (just above heat exchanger). The test point is sealed by a special screw/'O' ring assembly. For a correctly installed boiler typical values to be expected are:

CO <100 ppm $C0_2$ <9.2 % at maximum input **(Hot condition after 10 minutes)**

Levels significantly above these should be investigated and may indicate a defective component or faulty installation. Ensure the test point is FULLY GAS TIGHT. Do not substitute any other screw for the special Promax Part No. 5114700.


© Baxi Heating UK Ltd 2015

## 4.1 General Access

**WARNING**: Before attempting to remove any component from the boiler first disconnect the mains electricity supply by removing the plug from the wall socket or by switching off the boiler at the external isolating switch.

**IMPORTANT:** After removal or replacement of any gas carrying component a test for gas soundness must be made and functional check of the controls carried out.

**IMPORTANT**: Any 'O' rings, seals, gaskets or washers disturbed during replacement of parts must be visually inspected and replaced if worn or damaged.

Re-assemble all parts in reverse order.

1. Follow stages 1 - 3 (opposite) to remove the outer panels.

   **Internal Access**
2. Remove the screws securing the top engine box cover and lift the cover away from the boiler.
3. Remove the screws securing the air box cover and lift the cover away from the boiler.

## 4.2 Automatic Air Vent

Re-assemble all parts in reverse order.

1. Perform 4.1 General Access and drain down locally as described in 4.3
2. Pull away the securing clip and lift out the air vent parts as shown.

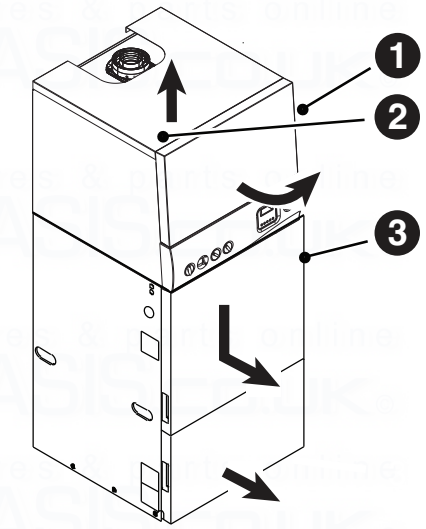


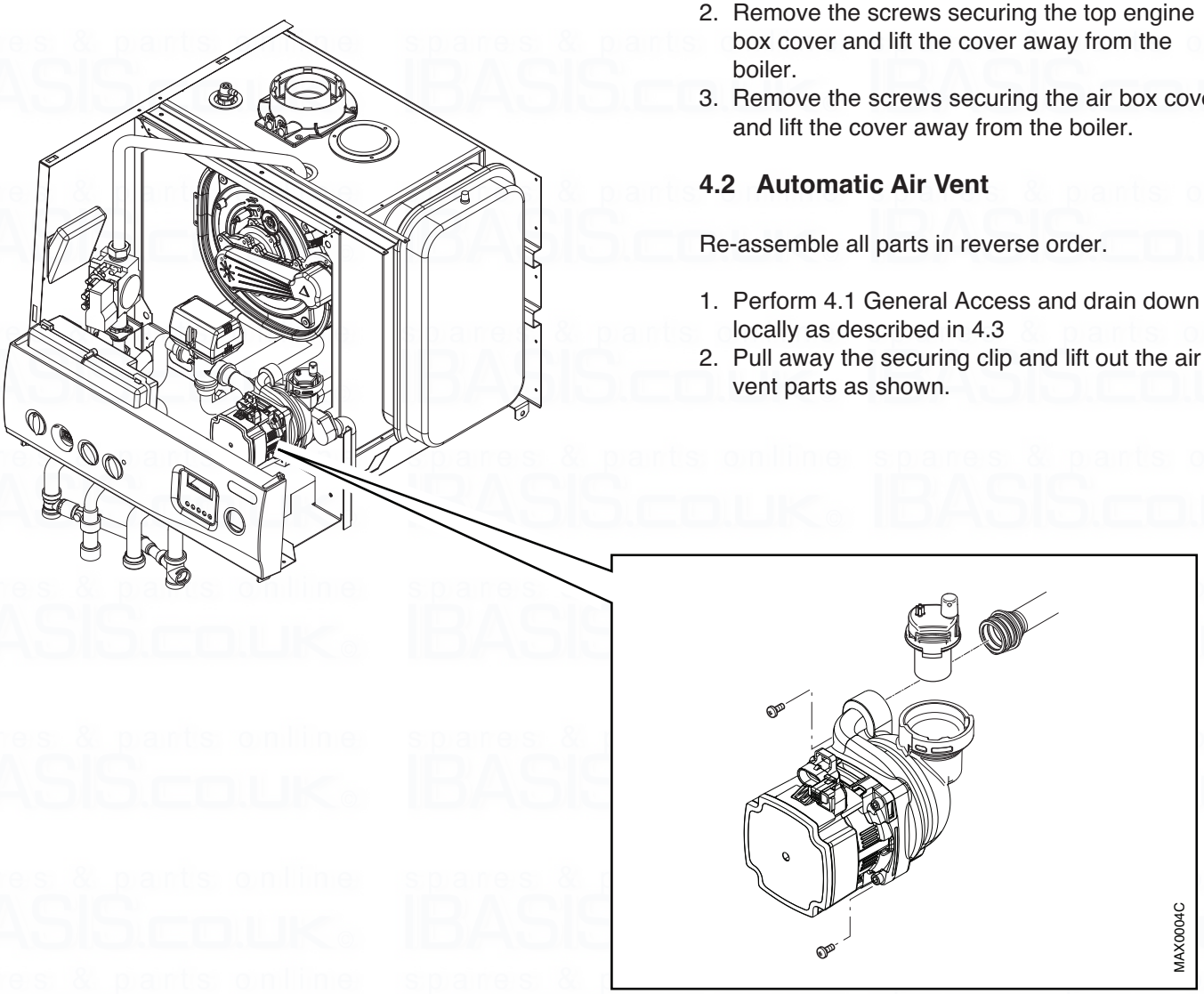


Fig. 17

© Baxi Heating UK Ltd 2015

## 4.3 Expansion Vessel, Pump & Pressure Switch

Re-assemble all parts in reverse order.

1. Check that the cap on the auto air vent is open. Turn the 3 isolating valves OFF and locally drain the boilers' circuit by opening the primary pressure relief valve.

2. Disconnect the flexible pipe at the union below the pump.

3. Pull the expansion vessel forward and 'spring' the RH side panel slightly to enable the vessel to be removed.

4. Check the pre-charge pressure of the replacement vessel is between 1.0 and 1.2 bar before fitting.

5. Reassemble in reverse order.

### 4.3a Pump - Head Only

1. Drain the primary circuit and disconnect the electrical plug from the pump motor.

2. Remove the socket head screws securing the pump head to the body and draw the head away.

3. Reassemble in reverse order.

### 4.3b Pump - Complete

1. Drain the primary circuit and disconnect the electrical plug from the pump motor.

2. Undo the two screws securing the body to the pipe and manifold and draw the pump forwards.

3. Unscrew the automatic air vent from the pump body.

4. Examine the 'O' ring seals on the return pipe and manifold, replacing if necessary.

5. Fit the air vent to the new pump body and reassemble in reverse order.

### 4.3c Automatic Air Vent

1. Drain the primary circuit and unscrew the automatic air vent from the pump body.

2. Examine the 'O' ring seal, replacing if necessary, and fit it to the new automatic air vent.

3. Reassemble in reverse order.

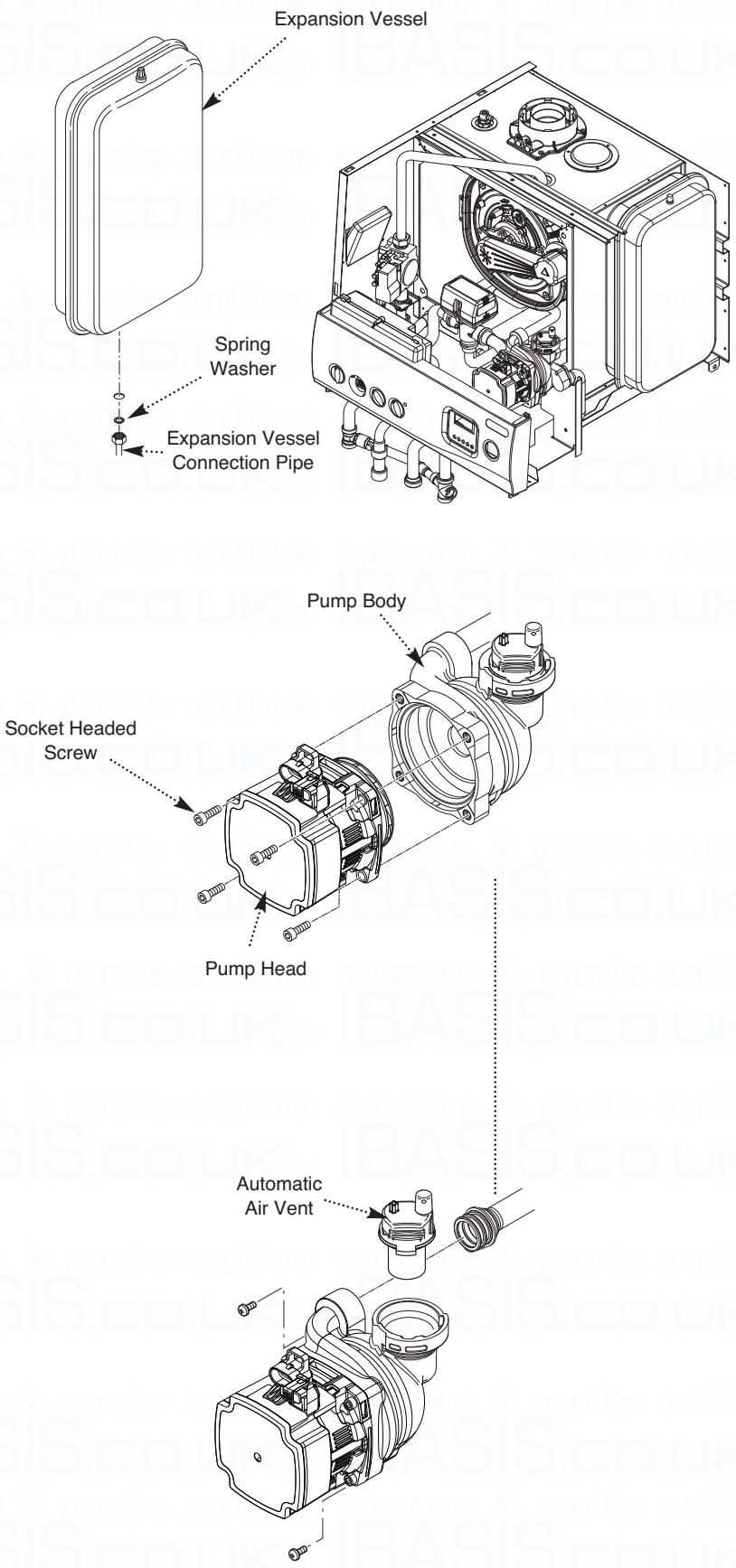


Fig. 18


© Baxi Heating UK Ltd 2015

## 4.4 Pressure Sensor/PRV

Re-assemble all parts in reverse order.

1. Perform 4.1 General Access.

2. Isolate three valves as shown and open the cap on the auto air vent.

3. Release pressure by opening the pressure relief valve.

4. **Primary Pressure Switch**
   Disconnect the electrical connector and unscrew the switch.

4. **Pressure Relief Valve (PRV)**
   Release union nut below the sensor body, remove securing clip and pull valve out from assembly.

4. **By-pass Valve**
   This valve is part of the complete 'cross' unit and cannot be replaced separately. Remove the pressure relief valve as shown above then release the "Techtite" unions and remove the 'cross' unit.

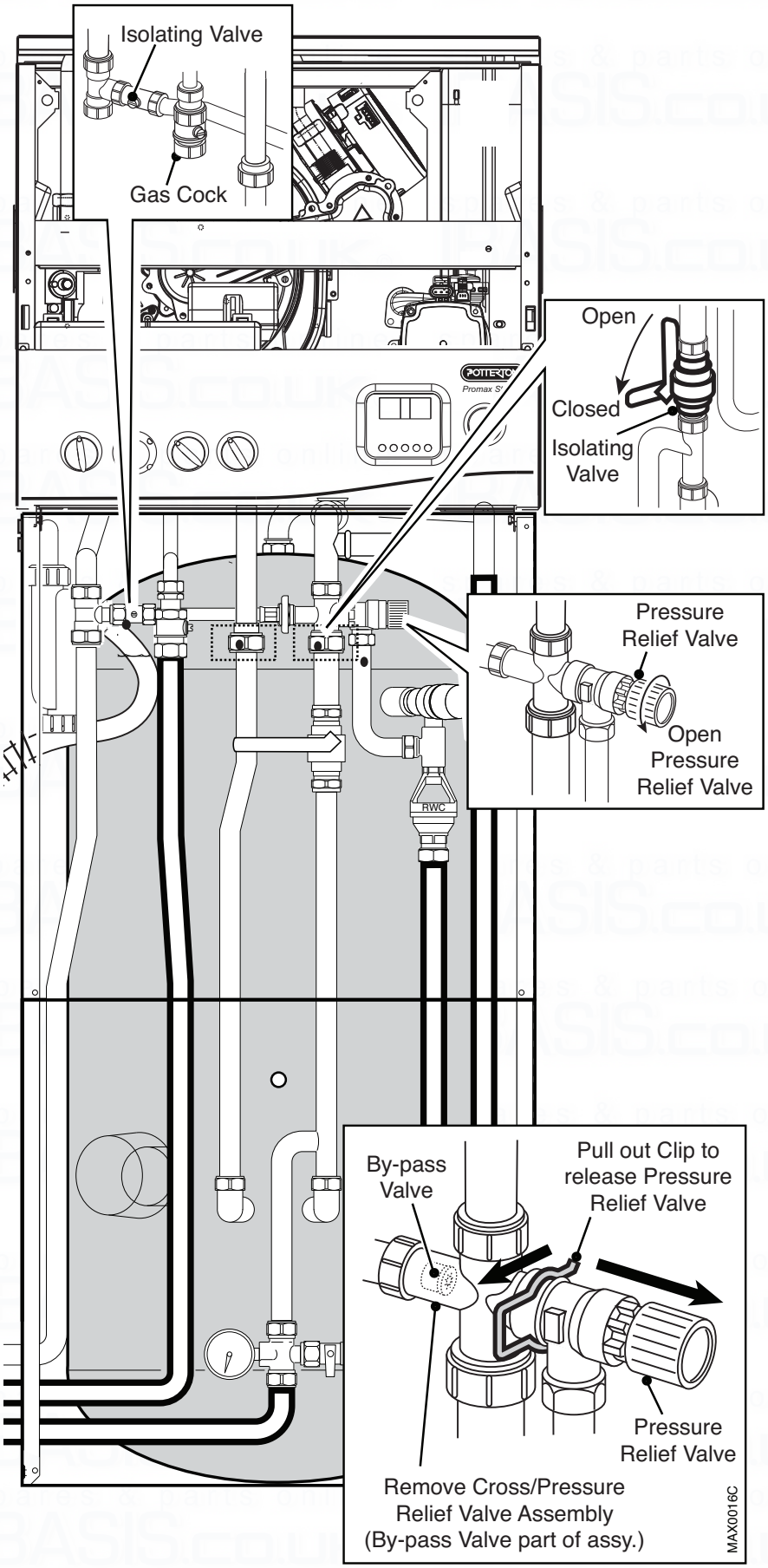


Fig. 19

© Baxi Heating UK Ltd 2015

## 4.5 Gas Valve

1. Turn the gas cock OFF and disconnect the electrical plug.

2. Pull off the earth lead and sensing pipe.

3. Undo the nuts on the venturi inlet pipe and valve inlet pipe. Remove the gas valve.

4. Examine the sealing washers, replace if necessary.

5. Reassemble in reverse order, ensuring the sealing washers are in place.

**IMPORTANT:** The $CO_2$ must be checked and adjusted (see Commissioning Checks on p.31 and 32).

## 4.6 Fan

1. Remove the air box front cover.

2. Undo the nut on the gas inlet pipe to the venturi and pull the sensing pipe off the fan. Examine the sealing washer and replace if necessary.

3. Undo the screws securing the manifold to the extension piece.

4. Partially remove the manifold and fan assembly, being careful to retain the injector in the venturi. Disconnect the fan electrical plugs before completely removing the assembly.

5. Undo the screws securing the fan to the venturi and fit the new fan, replacing the seal if necessary.

6. Examine the gasket behind the manifold and replace if necessary.

7. Reassemble in reverse order, ensuring that the injector is in place and the sensing pipe is connected to the fan.

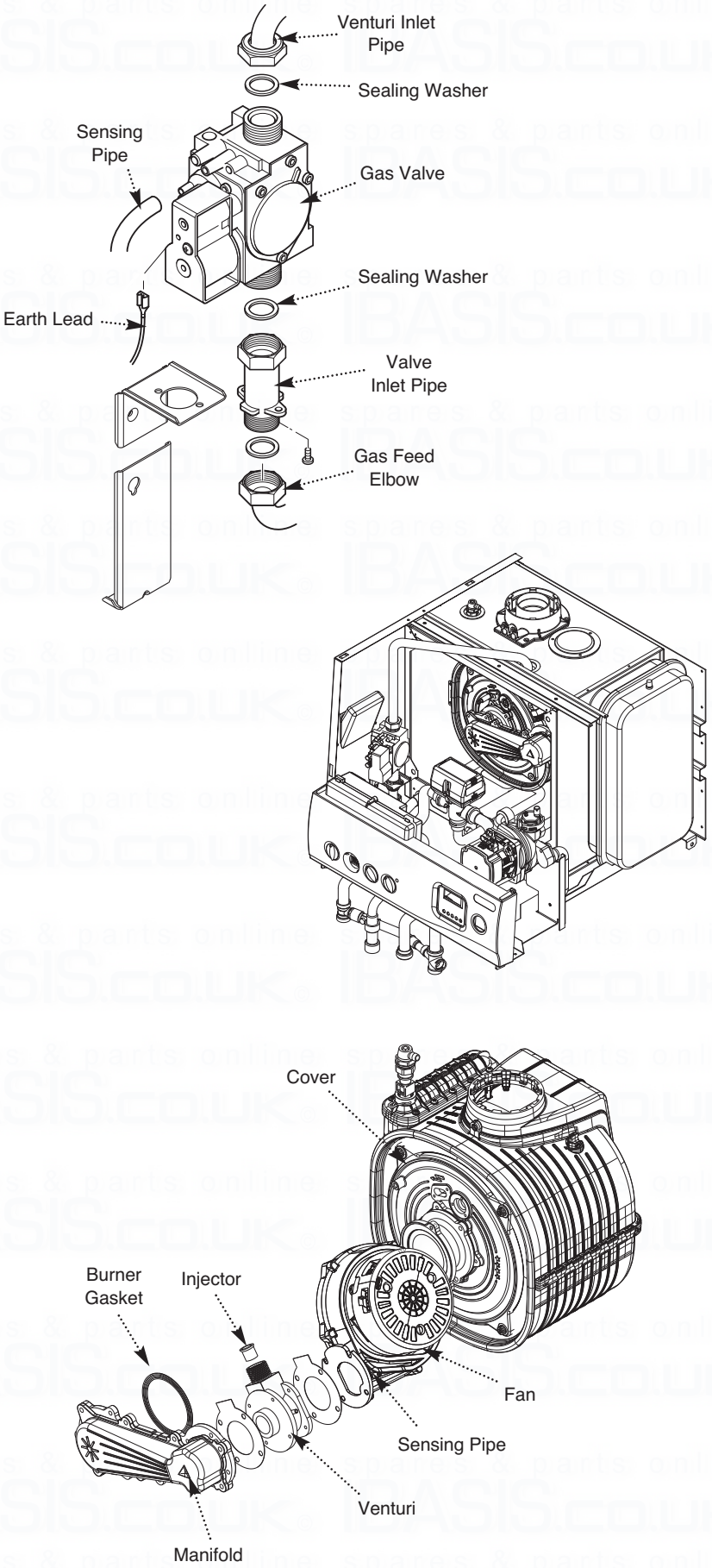


Fig. 20


© Baxi Heating UK Ltd 2015

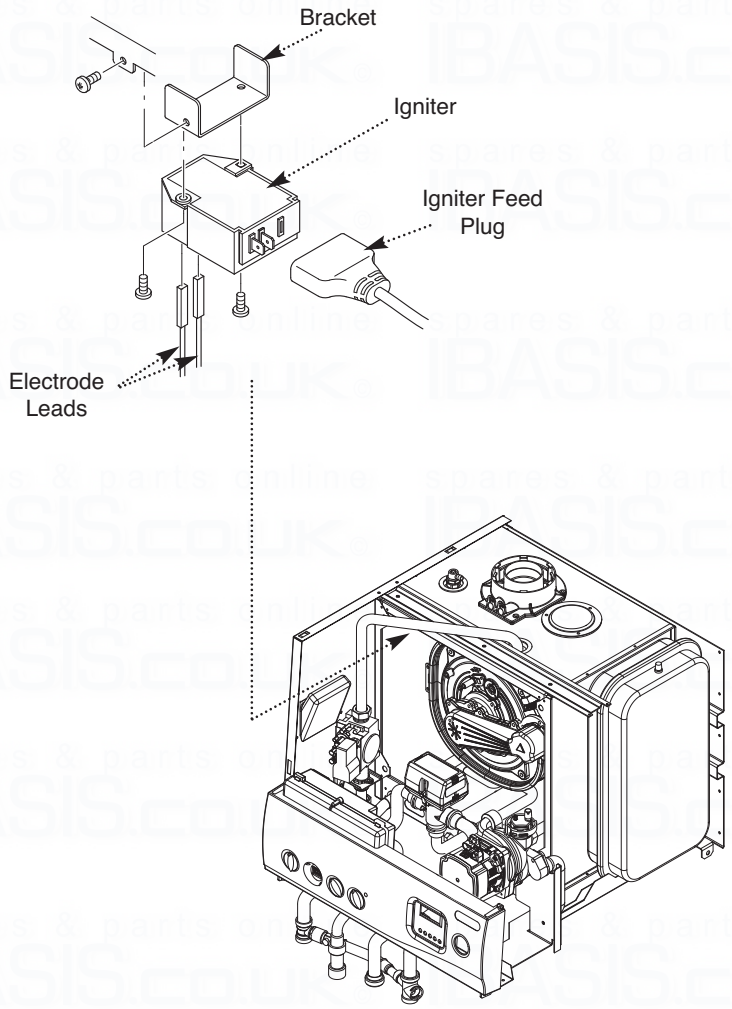


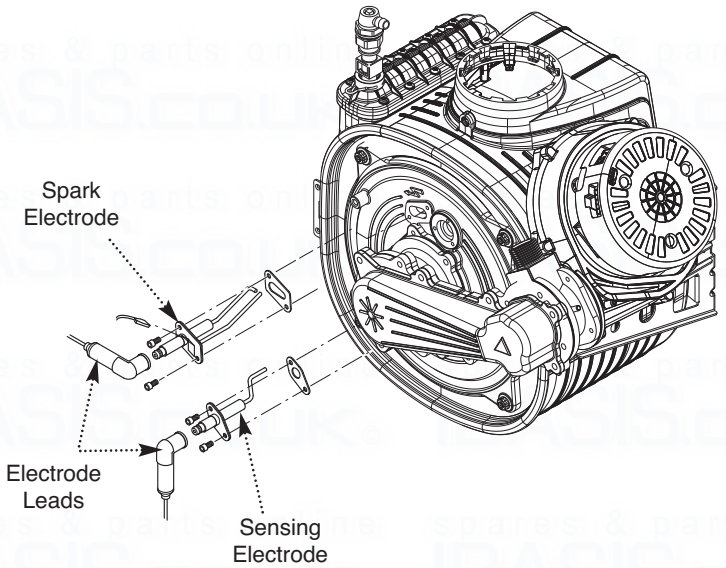


Fig. 21

### 4.7 Igniter

1. Remove the air box front cover.

2. Disconnect the igniter feed plug and the electrode leads, noting their positions.

3. Undo the screw securing the bracket to the boiler.

4. Remove the igniter and transfer the bracket to the new component.

5. Reassemble in reverse order.

### 4.8 Spark and Sensing Electrodes

1. Disconnect the electrode leads, noting their positions.

2. Remove the retaining screws securing each of the electrodes to the combustion box cover and remove the electrodes.

3. Check the condition of the sealing gaskets and replace if necessary. Reassemble in reverse order.

## 4.9 Overheat Thermostat

Re-assemble all parts in reverse order.

1. Perform 4.1 General Access.

2. Disconnect electrical connections and unscrew the thermostat. Polarity of the wires is not important.

© Baxi Heating UK Ltd 2015

## 4.10 Burner

1. Remove the fan/manifold assembly - see Section 4.6.

2. Undo the screws securing the spacer to the cover.

3. Withdraw the burner from the cover and replace with the new one.

4. Replace the burner gasket.

5. Reassemble in reverse order.

## 4.11 Insulation

1. Remove the electrode leads, noting their positions. Also remove the electrodes.

2. Undo the screws securing the cover to the heat exchanger. Draw the cover assembly away.

3. Remove the cover insulation piece.

4. Fit the new insulation carefully over the burner and align it with the slots for the electrodes.

5. The rear insulation is retained by a screw and large washer, remove these and draw the insulation out of the heat exchanger.

6. Examine the cover seal and replace if necessary.

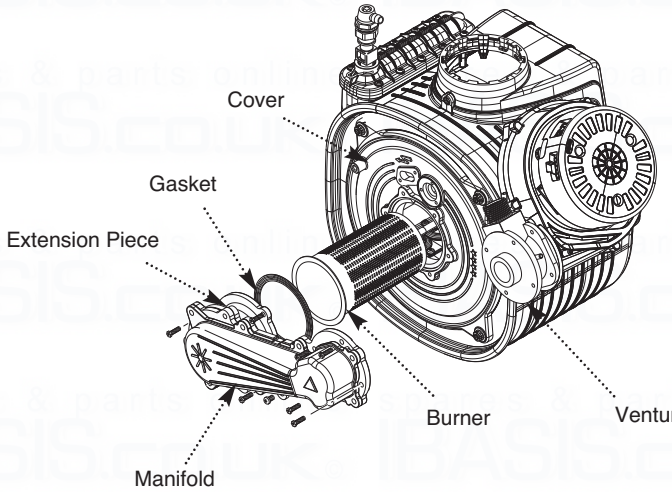


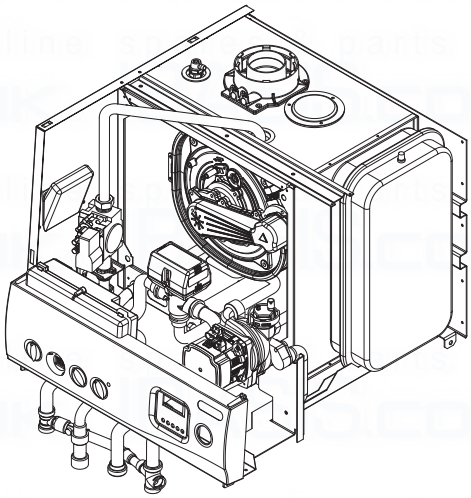

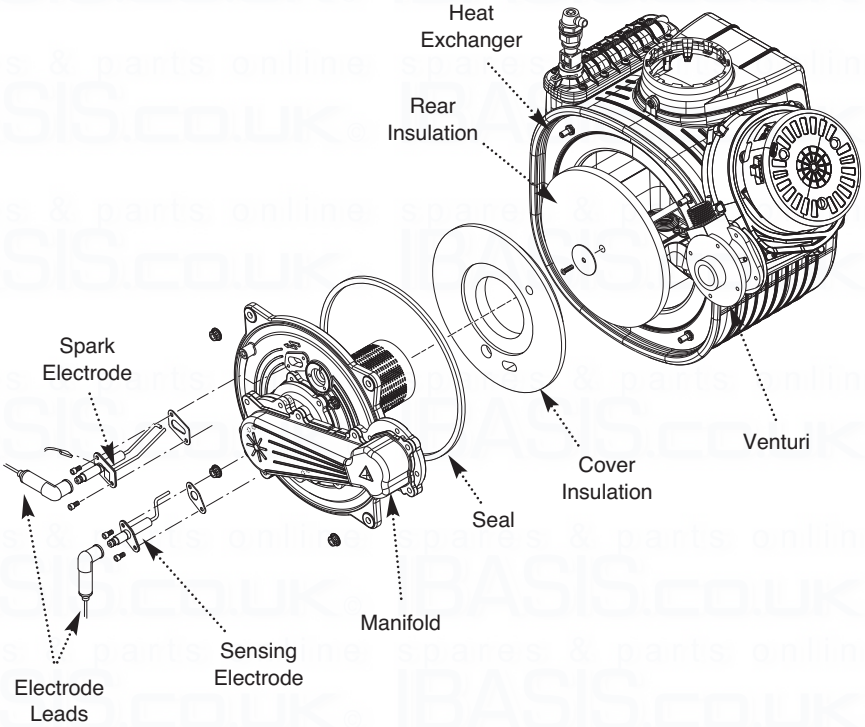


Fig. 22


© Baxi Heating UK Ltd 2015

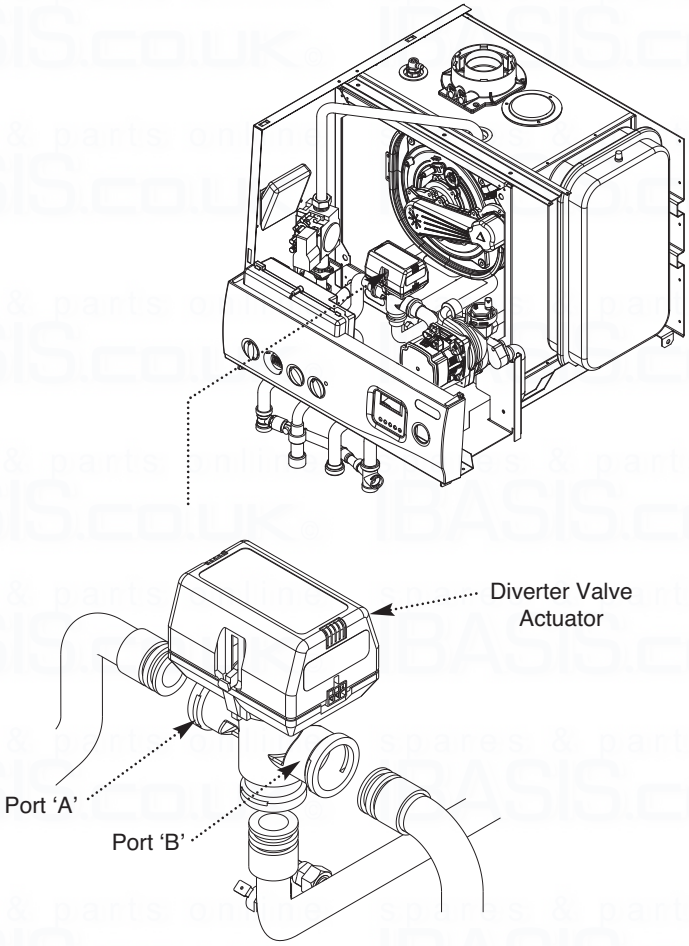


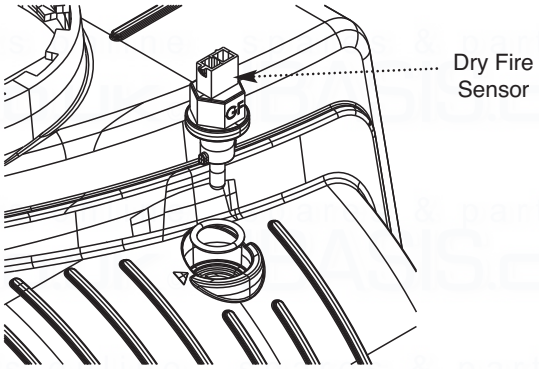


Fig. 23

## 4.12 Diverter Valve Actuator

Re-assemble all parts in reverse order.

1. Perform 4.1 General Access.
2. Disconnect the electrical connector at the actuator.
3. Release the locking catch and twist the actuator until it unlocks from the valve and remove from the boiler.

### Diverter Valve Complete

Re-assemble all parts in reverse order.

1. Perform 4.1 General Access.
2. Check that the boiler primary system is isolated from mains water supply.
3. Release pressure from primary system and drain down until water level is below the valve.

**NOTE:** A convenient way to check the water level is to drain all water to the level of the primary expansion relief valve.

**NOTE:** The markings on the valve body are an aid to correct installation (See Fig. 23).

4. Remove the three spring clips from the connections and remove the valve from the boiler.

### Manual Air Vent

5. Unscrew vent from its mounting.

See Commissioning Instructions, Page 30 for procedure to re-fill and vent the sealed primary system.

## 4.13 Temperature Flow & Dry Fire Sensors

6. Disconnect the electrical connector and unscrew the sensor.

© Baxi Heating UK Ltd 2015

## 4.14 Heat Exchanger

**NOTE:** Replacing the heat exchanger involves disconnecting the appliance from the flue and air pipes. It is essential that the flue system is fully reinstated and tested so we recommend that the appropriate replacement flue pipe and fittings be obtained before starting this work.

Re-assemble all parts in reverse order.

1. Perform 4.1 General Access.

2. Check that the boiler primary system is isolated from the mains water supply. Release pressure from the primary system and drain down.

3. Remove expansion vessel, pump, gas valve, fan/venturi, diverter valve and heat exchanger door (complete with burner) all as detailed in previous sections. Remove flow and return pipework from the push-fit connections on the manifold underneath the heat exchanger. Retain securing clips for re-use.

4. Disengage the flue/air inlet duct/elbow on top of the boiler. Unscrew the 4 c/sunk screws and remove the flue connector fitting.

5. Disconnect wiring from temperature sensors and overheat thermostat. Remove the spark generator and leads. Remove the ionisation probe.

6. Disconnect the flexible condensate pipe at the union just inside the airbox.

7. Remove two flanged set screws securing the heat exchanger. Support weight of heat exchanger before removing the clips entirely.

8. Manoeuvre the heat exchanger away from the support brackets, then tilt forward from the bottom to remove.

9. Transfer the extension for the manual vent to the new heat exchanger.

Fig. 24


© Baxi Heating UK Ltd 2015

## 4.15 Replacement of Immersion Heater and Immersion Heater Combined Thermostat/Thermal Cut-out

The cylinder must be fully drained prior to removing the immersion heater. Refer to Section 2.8 for the procedure to drain the unit.

1. **Important: Ensure ALL power supplies are isolated before starting work on the boiler**.
   Perform the actions detailed in section 4.1 General Access.
   **Note:** only the two lower front panels need be removed for this servicing action, follow instructions 3 and 4 for how to remove these panels.

2. Remove the immersion heater cover by removing the securing nut and pulling the cap away from the cylinder.

3. Disconnect the electrical supply cable from the thermostat and the earth post assembly. Remove the thermostat from the immersion heater by carefully pulling outwards. DO NOT twist the thermostat as damage to the connections to the immersion heater may occur.

4. To remove the immersion heater unscrew the brass backnut using the key spanner supplied with the unit. Retain the backnut. Over time the immersion heater gasket may become stuck to the mating surface. To break the seal insert a round bladed screwdriver into one of the pockets on the immersion heater and gently lever up an down.

5. Withdraw the immersion heater from the cylinder.
   **Note:** the immersion heater is curved downwards 90 degrees to reach the base of the cylinder. When removing, the head of the immersion heater should be tilted towards the floor for ease of withdrawal.

6. Insert the immersion heater into the boss ensuring the right angled element hangs vertically downwards towards the base of the unit. Push the immersion heater mounting plate into the boss so the gasket seats on the flange at the base of the boss. It may be helpful to support the immersion heater using a round bladed screwdriver inserted into one of the pockets on the immersion heater whilst the brass backnut is tightened. Tighten the brass backnut using the key spanner supplied.

7. Fit the thermostat by sliding the stem into the upper pocket and carefully plugging the two male spade terminals on the underside of the thermostat head into the corresponding female terminations on the element. Carefully push home until the terminals are fully engaged.

8. Re-connect the electrical supply to the thermostat and earth post.
   The Live (Brown) conductor should be connected directly to the thermostat terminal marked A.
   The Neutral (Blue) conductor should be connected directly to the thermostat terminal marked B.
   The earth conductor should be connected to the threaded post on the bracket marked ⏚ .

9. Re-fit the protective cover over the immersion heater assembly and secure using the nut previously removed.

10. Ensure the cylinder is correctly re-filled prior to switching on the immersion heater. Do not operate the immersion heater with the protective cover removed.

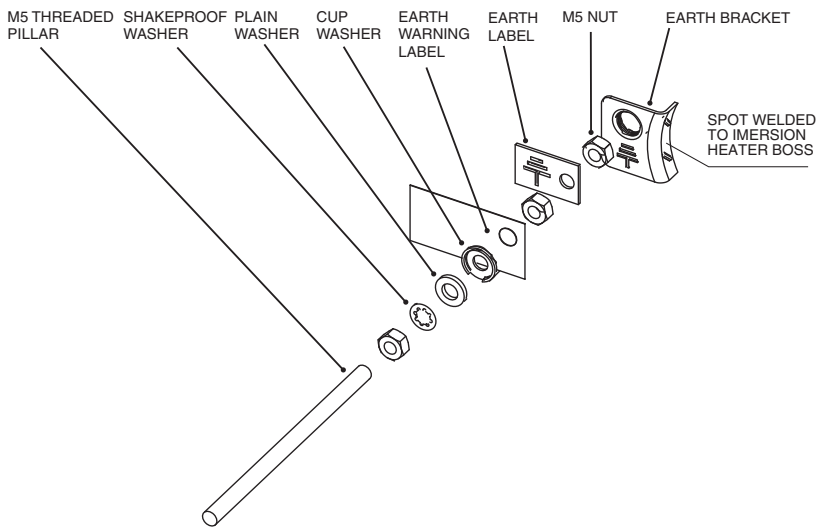


Fig. 25

© Baxi Heating UK Ltd 2015

## 4.16 Gas/Air Valve Setup Procedure

Checking the $CO_2$

1. The combustion ($CO_2$) may be checked at maximum rate using a suitably calibrated analyser after running the boiler for several minutes.

2. To do this it is necessary to set the boiler to 'Calibration Mode'.

3. Ensure that all external controls are calling for heat. The actual current boiler temperature is shown on the display.

4. Turn both temperature control knobs fully anticlockwise, then quickly turn the DHW temperature knob 1/4 clockwise twice and back fully anticlockwise.

5. The display will now alternate between 'SF' and the current boiler temperature and both green LEDs will flash.

6. Turn the CH temperature knob fully clockwise. As the knob is turned the display will change, indicating the percentage of maximum fan speed.

7. The display will show '00', indicating maximum rate, then revert to 'P ' alternating with the current boiler temperature.

8. Remove the plug from the flue adaptor test point. Insert the analyser probe and allow time for the reading to settle.
The $CO_2$ should be 8.9% ± 0.2

9. It is possible to alter the $CO_2$ by adjustment of the gas valve. At maximum rate the 'Max. Rate' throttle adjustment screw should be turned clockwise to decrease $CO_2$, anti-clockwise to increase $CO_2$ using a suitable 2.5mm hexagon key, until the correct reading is obtained.

10. The $CO_2$ must then be checked at minimum rate. Turn the CH temperature knob fully anticlockwise. As the knob is turned the display will change, indicating the fan speed. When the display reads ' 0' the boiler runs at minimum rate.
The $CO_2$ should be 8.6% ± 0.2.

11. If at minimum $CO_2$ is not correct please ring our after sales service department.

12. The 'Calibration Function' is maintained for 20 minutes unless the maximum CH temperature is exceeded. The function can be disabled at any time by turning the DHW knob.

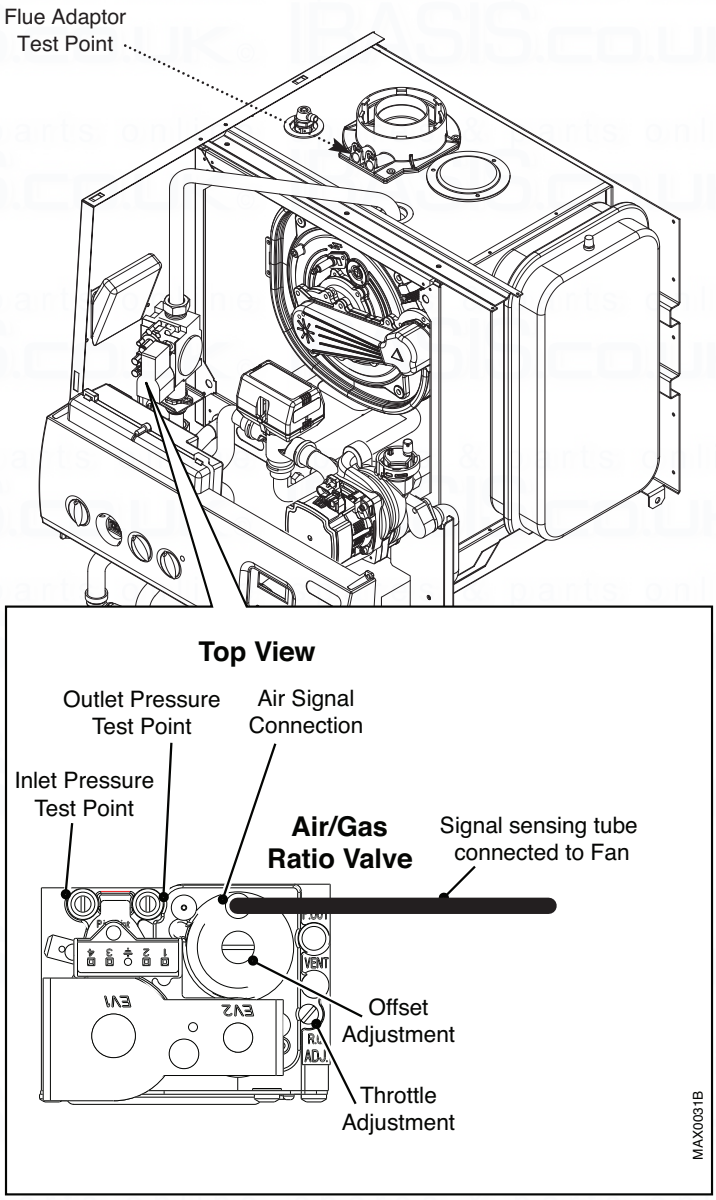


| | Burner Pressure (mb) | Gas Rate ($m^3$/hr) | CO (ppm) | $CO^2$ (%) |
|---|---|---|---|---|
| Min Gas Rate | 0.6 - 0.8 | 0.7 - 0.74 | 2 - 30 | 8.4 - 8.8 |
| Max Gas Rate | 6.8 - 7.2 | 2.48 - 2.74 | 30 - 100 | 8.7 - 9.2 |


© Baxi Heating UK Ltd 2015

# 5. Wiring Diagrams

Wiring/Functional Flow Diagram

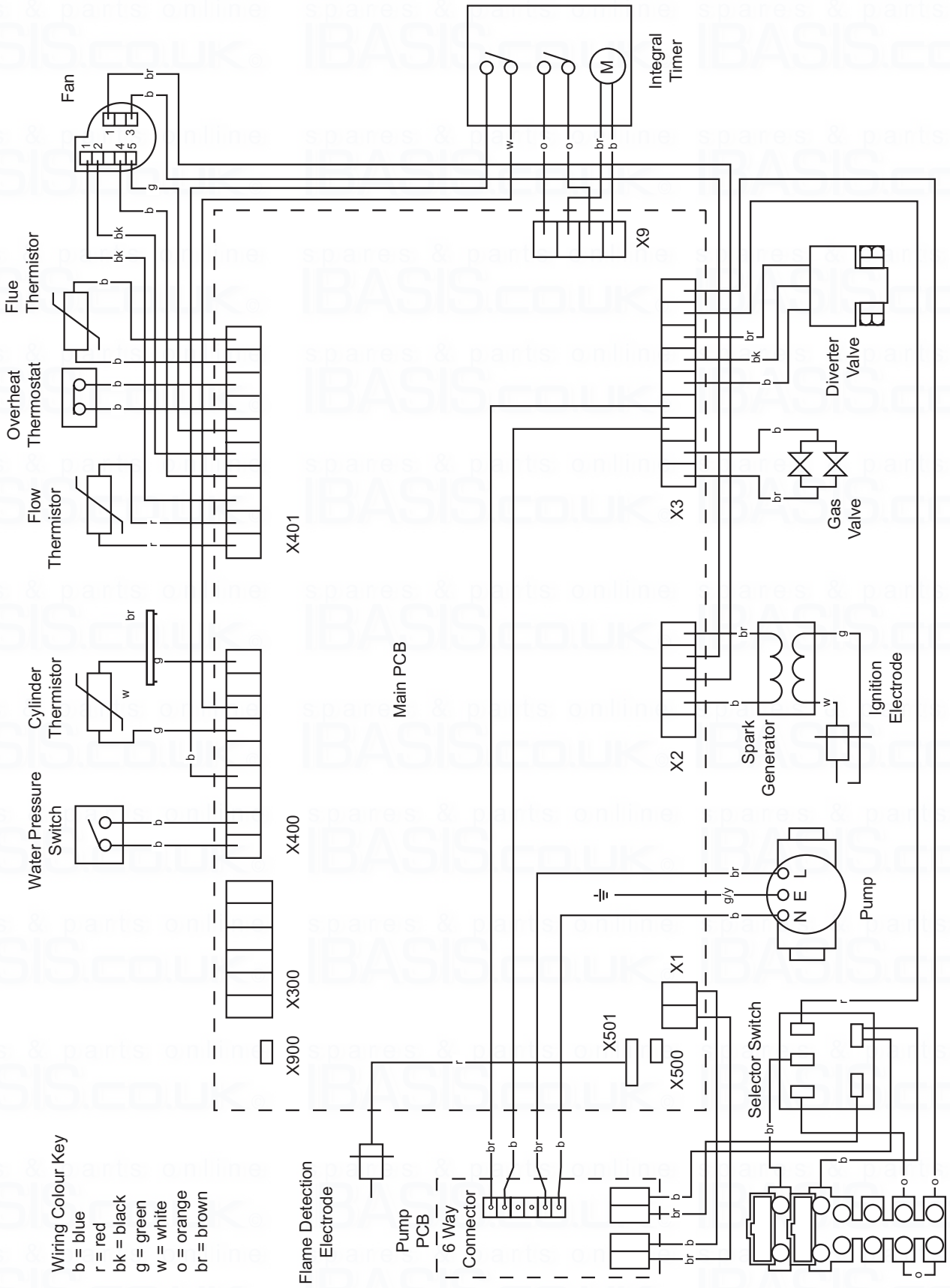


Fig. 27

© Baxi Heating UK Ltd 2015

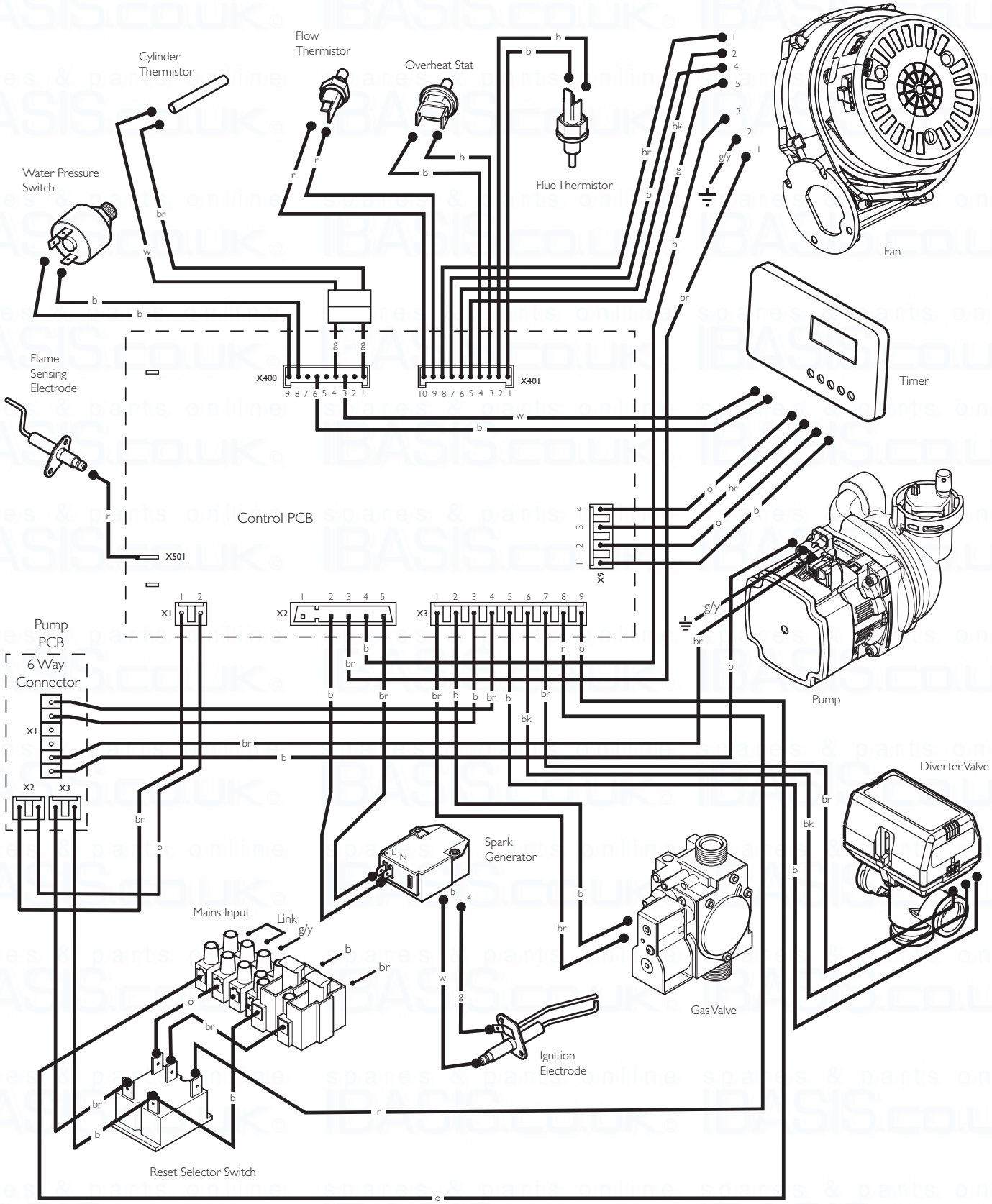


| | | | |
|---|---|---|---|
| br | - brown | g | - green |
| bk | - black | g/y | - green / yellow |
| b | - blue | r | - red |
| w | - white | o | - orange |

Fig. 28



© Baxi Heating UK Ltd 2015

# 6. Fault Finding Guide

Boiler Fault Finding

**NOTE:** When instructed to turn the selector to the reset position turn the selector switch fully anticlockwise against the spring pressure to the reset position and hold for 5 seconds to reset the boiler.

**Table Of Error Codes**

| | |
|---|---|
| E20 | Central Heating NTC Fault |
| E50 | Flue NTC Fault |
| E28 | Hot Water NTC Fault |
| E110 | Safety Thermostat Operated |
| E119 | Water Pressure Switch Not Operated |
| E125 | Pump Fault or Primary Circulation Problem<br>Tank Thermistor not in Tank |
| E130 | Flue NTC Operated |
| E131 | Interruption Of Power Supply while in fault mode |
| E133 | Interruption Of Gas Supply or Flame Failure |
| E160 | Fan or Fan Wiring Fault |
| E193 | Pre-Circulation Fault |

**Initial Fault Finding Checks**

1. Check that gas, water and electrical supplies are available at the boiler.

2. Electrical supply = 230V ~ 50 Hz.

3. CH water system pressurised to 0.5 bar minimum when the boiler is cold.

4. The preferred minimum gas pressure is 20 mbar.

5. Carry out electrical system checks, i.e. Earth Continuity, Resistance to Earth, Short Circuit and Polarity with a suitable meter.

**NOTE:** These checks must be repeated after any servicing or fault finding.

6. Ensure all external controls are calling for heat and check all external and internal fuses. Before any servicing or replacement of parts, ensure the gas and electrical supplies are isolated.

**Error Codes**

1. If a fault occurs on the boiler an error code may be shown by the facia display.

2. The codes are either two or three digit, preceded by the letter 'E'. For example, code E133 will be displayed by 'E1' alternating with '33'. E50 is shown as 'E' then '50'

E20, E28 & E50 indicate faulty components or wiring harness.

E110 shows overheat of the primary water and E130 overheat of the flue system.

E119 is displayed when the primary water pressure is less than 0.5 bar.

E133 indicates that the gas supply has been interrupted, ignition has failed or the flame has not been detected.

E125 is displayed in either of two situations:-
i) If within 15 seconds of the burner lighting the boiler temperature has not changed by 1°.
ii) If within 10 minutes of the burner lighting the boiler temperature twice exceeds the selected temperature by 30°.
In these instances the pump is probably inoperative.

3. By turning the selector switch to the 'Reset' position for a minimum of 5 seconds when E110, E130 & E133 are displayed it is possible to relight the boiler.

4. If this does not have any effect, or the codes are displayed regularly further investigation is required.

© Baxi Heating UK Ltd 2015

Refer to Section “Illustrated Wiring Diagram” for position of terminals and components

**Central Heating -** Follow operational sequence

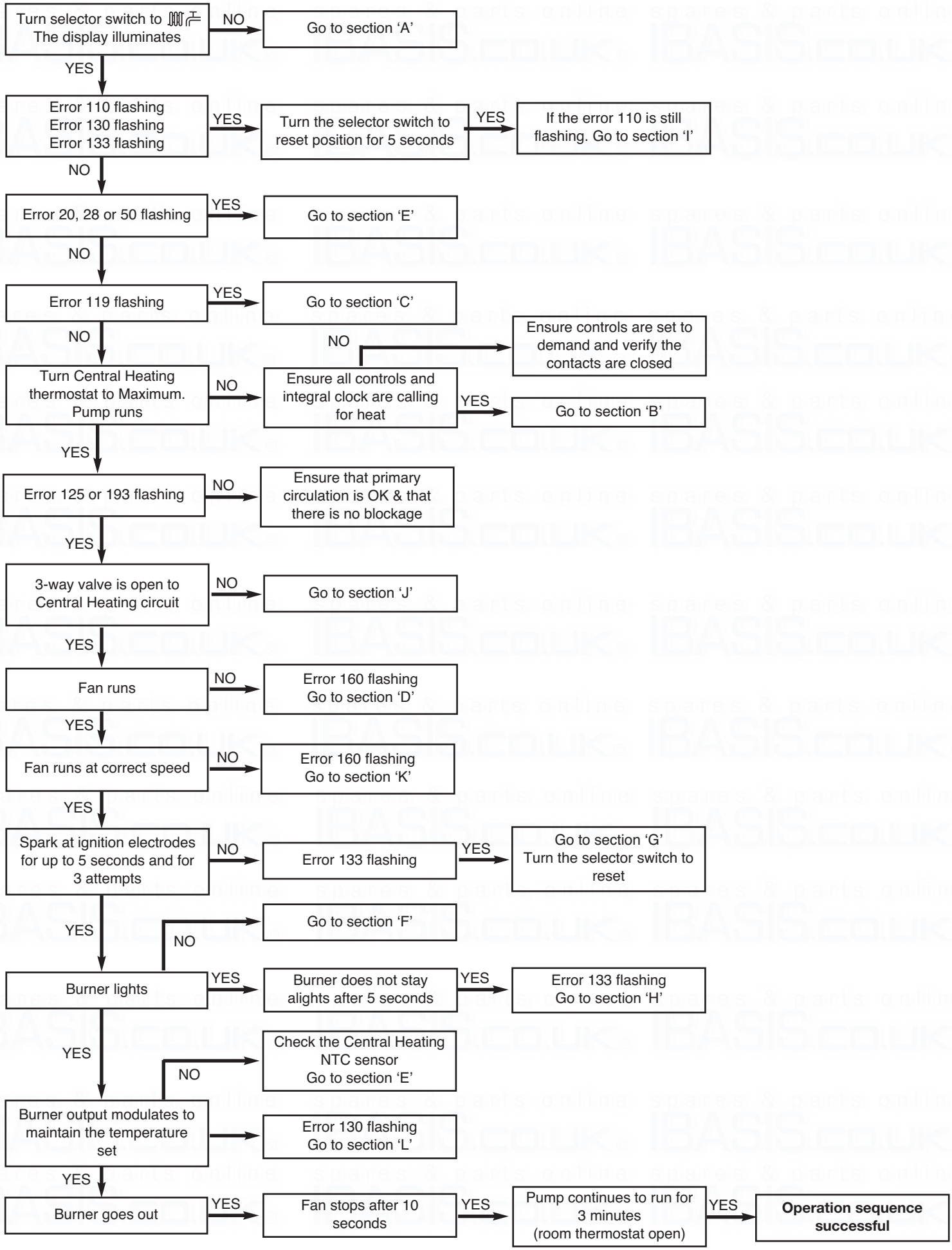




© Baxi Heating UK Ltd 2015

**Domestic Hot Water -** Follow operational sequence

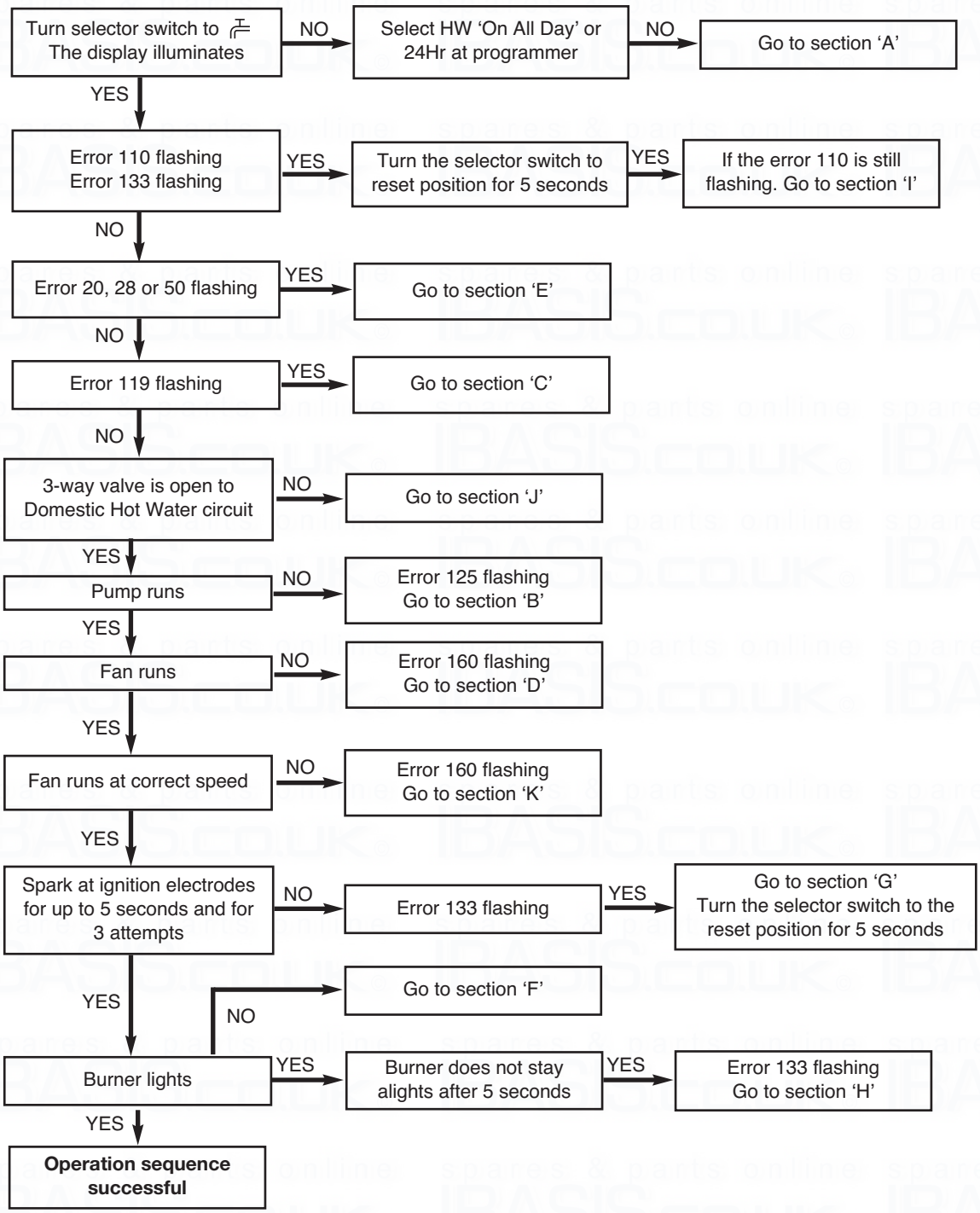


© Baxi Heating UK Ltd 2015

## Fault Finding Solutions Sections

### A

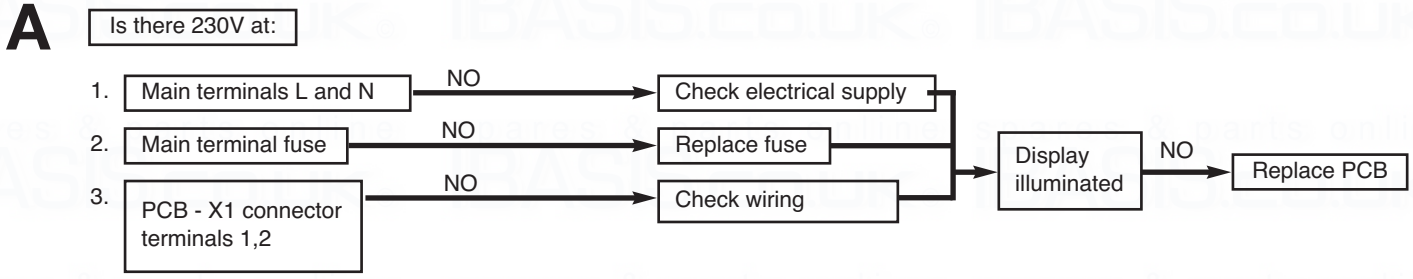


### B

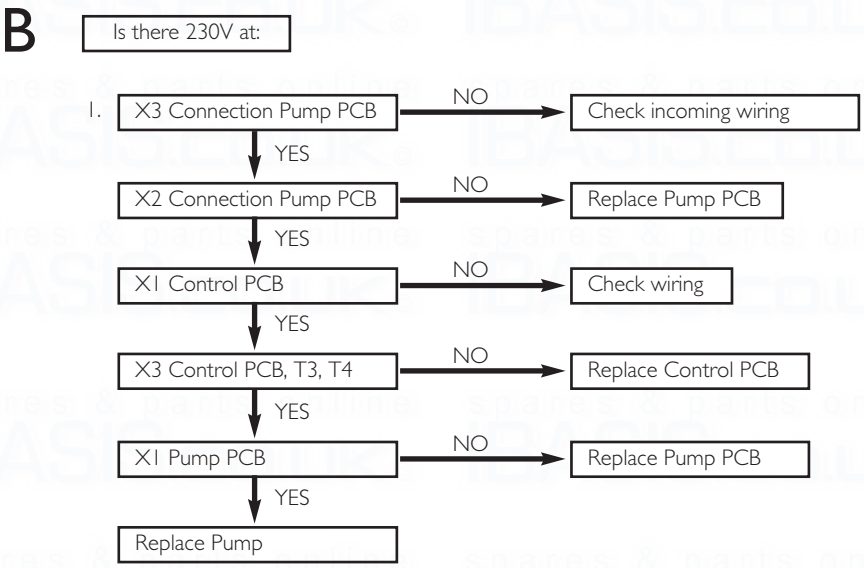


### C

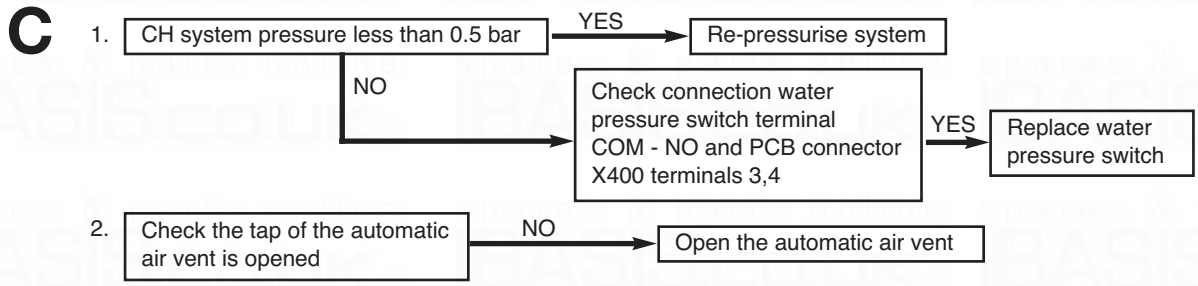


### D

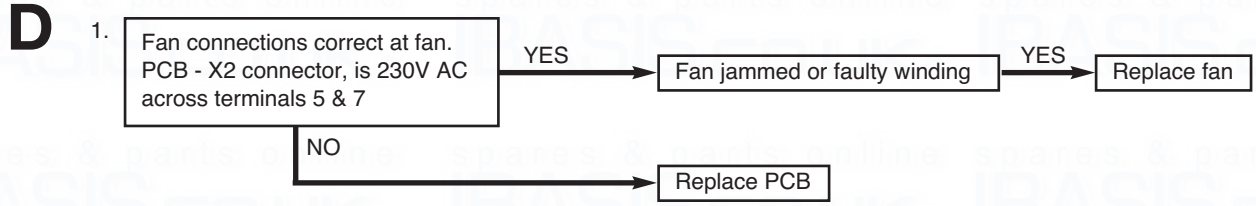



© Baxi Heating UK Ltd 2015

## E

Temperature sensors faulty.
Cold resistance approximately
10kΩ @ 25° C (DHW and CH sensors)
20kΩ @ 25° C (Flue sensor)
(resistance reduces with increase in temp.)

→ NO → Replace sensor

## F

1. Check and correct the connection of the tube between the venturi and gas valve

2. Gas at burner → NO → Ensure gas is on and purged

↓

PCB - X3 connector is 230V AC across terminals 1 & 2

→ YES → Replace gas valve

↓ NO → Replace PCB

## G

Check and correct if necessary
1. Ignition electrode and lead
2. Electrode connection
3. Spark gap and position

→ YES →

Voltage at PCB - X2 connector is 110V DC across terminals 2 & 5
(Note: from multimeter connect 'common' to 2 & 'volts' to 5)
Check wiring

→ NO → Replace PCB

→ YES → Replace igniter

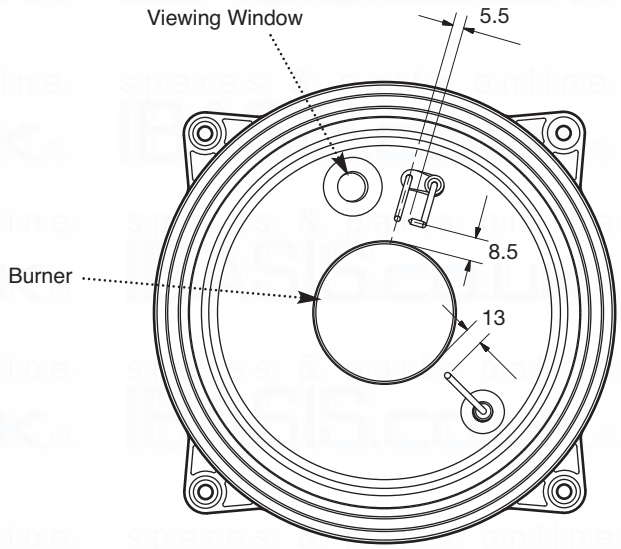


Electrode Position

© Baxi Heating UK Ltd 2015

## H

1. Check the gas supply pressure: For Natural Gas greater than 10 - 11 mbar

2. Check and correct if necessary
   1. The mechanical set of the gas valve (CO2 values - see instruction)
   2. Flame sensing electrode and lead connections
   3. Flame sensing electrode position

   Flame current should be more than 0.5 $\mu$A

   YES → Replace PCB

   NO → Replace flame sensing electrode

## I

1. Overheat thermostat operated or faulty, i.e. continuity across thermostat terminals

   NO → Allow to cool. Continuity across thermostat terminals more than 1.5 ohm

   YES → Replace safety thermostat

   YES → Replace PCB

## J

Is there 230V at:

1. Motor 3-way valve

   YES → Replace diverter valve actuator

2. PCB - X3 connector terminals
   5 & 6 central heating mode
   5 & 7 domestic hot water mode

   NO → Replace PCB

   YES → Change pump supply cable

## K

1. Fan connections correct at fan.
   PCB - X401 connector terminals 5,6,7 & 8

   YES → Replace fan

## L

1. Temperature sensors faulty.
   Cold resistance approximately
   10kΩ @ 25° C (CH sensor)
   20kΩ @ 25° C (Flue sensor)
   (resistance reduces with increase in temp.)

   NO → Replace sensor

2. If pump is running the heat exchanger could be obstructed

   YES → Replace heat exchanger


© Baxi Heating UK Ltd 2015

# 7. Short List Of Spare Parts

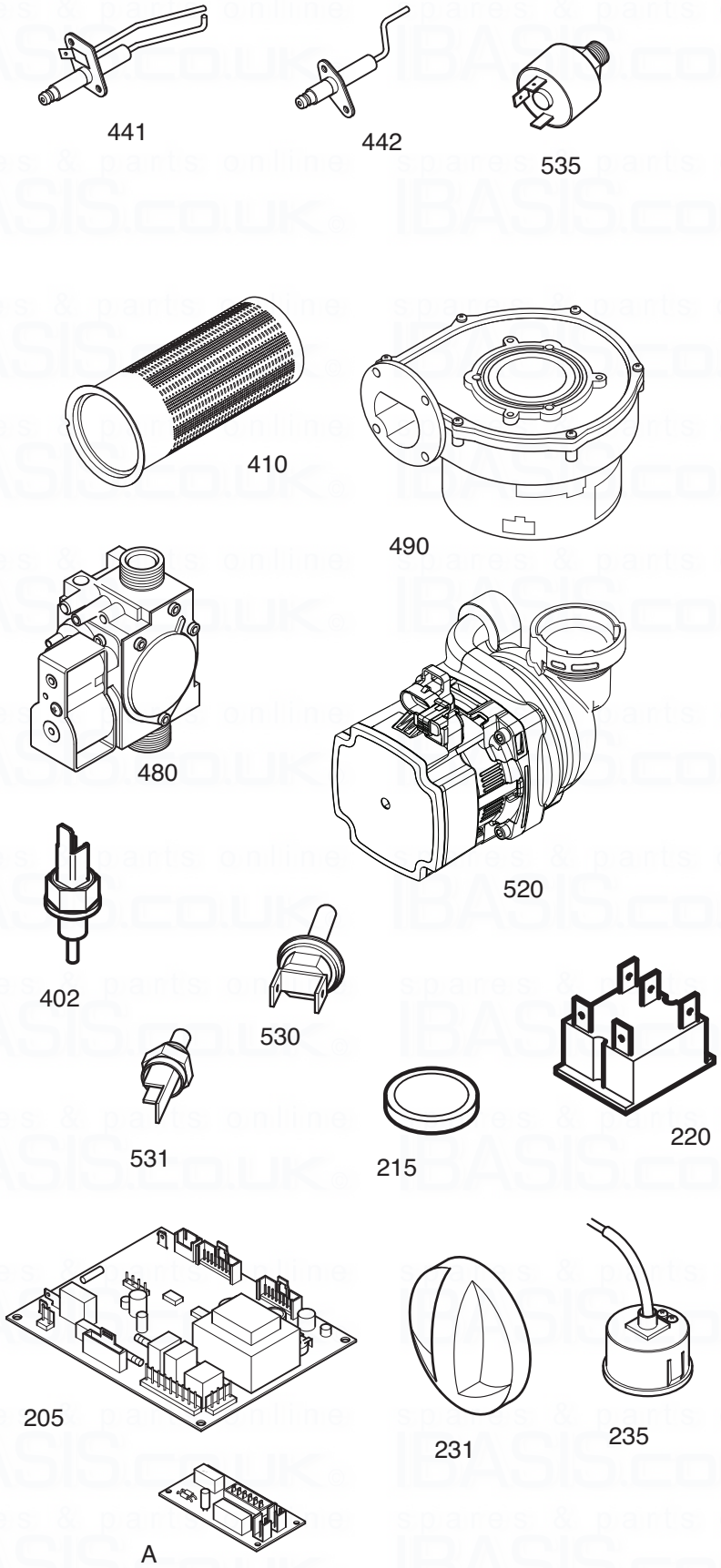


Fig. 29

**Short Parts List**

| Key No. | Description | Manufacturers Part No. |
|---|---|---|
| 490 | Fan | 5129230 |
| 441 | Igniter Electrode | 5114702 |
| 442 | Sensing Electrode | 5117275 |
| 480 | Gas Valve | 720301001 |
| 410 | Burner | 5114697 |
| 535 | Water Pressure Switch | 5114748 |
| 520 | Pump | 7220533 |
| 402 | Flue Thermostat | 5114747 |
| 531 | NTC Sensor | 5114725 |
| 530 | Overheat Thermostat | 5106291 |
| 235 | Pressure Gauge | 248090 |
| 205 | PCB | 5117086 |
| 220 | Selector Switch | 248095 |
| 215 | Battery (Programmer) | 5118231 |
| 231 | Knob | 5116069 |
| A | Pump PCB | 7222704 |

© Baxi Heating UK Ltd 2015

# GAS BOILER SYSTEM COMMISSIONING CHECKLIST

**This Commissioning Checklist is to be completed in full by the competent person who commissioned the boiler as a means of demonstrating compliance with the appropriate Building Regulations and then handed to the customer to keep for future reference.**

Failure to install and commission according to the manufacturer's instructions and complete this Benchmark Commissioning Checklist will invalidate the warranty. This does not affect the customer's statutory rights.

| | |
|---|---|
| Customer name: | Telephone number: |
| Address: | |
| Boiler make and model: | |
| Boiler serial number: | |
| Commissioned by (PRINT NAME): | Gas Safe register number: |
| Company name: | Telephone number: |
| Company address: | |
| | Commissioning date: |
| **To be completed by the customer on receipt of a Building Regulations Compliance Certificate*** | |
| Building Regulations Notification Number (if applicable): | |

| **CONTROLS** (tick the appropriate boxes) | | | | |
|---|---|---|---|---|
| Time and temperature control to heating | Room thermostat and programmer/timer | | Programmable room thermostat | |
| | Load/weather compensation | | Optimum start control | |
| Time and temperature control to hot water | Cylinder thermostat and programmer/timer | | Combination Boiler | |
| Heating zone valves | Fitted | | Not required | |
| Hot water zone valves | Fitted | | Not required | |
| Thermostatic radiator valves | Fitted | | Not required | |
| Automatic bypass to system | Fitted | | Not required | |
| Boiler interlock | | | Provided | |

| **ALL SYSTEMS** | | | | |
|---|---|---|---|---|
| The system has been flushed and cleaned in accordance with BS7593 and boiler manufacturer's instructions | | | Yes | |
| What system cleaner was used? | | | | |
| What inhibitor was used? | | | Quantity | litres |
| Has a primary water system filter been installed? | Yes | | No | |

| **CENTRAL HEATING MODE** measure and record: | | | | |
|---|---|---|---|---|
| Gas rate | m³/hr | **OR** | | ft³/hr |
| Burner operating pressure (if applicable) | mbar | **OR** Gas inlet pressure | | mbar |
| Central heating flow temperature | | | | °C |
| Central heating return temperature | | | | °C |

| **COMBINATION BOILERS ONLY** | | | | |
|---|---|---|---|---|
| Is the installation in a hard water area (above 200ppm)? | Yes | | No | |
| If yes, and if required by the manufacturer, has a water scale reducer been fitted? | Yes | | No | |
| What type of scale reducer has been fitted? | | | | |
| **DOMESTIC HOT WATER MODE** Measure and Record: | | | | |
| Gas rate | m³/hr | **OR** | | ft³/hr |
| Burner operating pressure (at maximum rate) | mbar | **OR** Gas inlet pressure at maximum rate | | mbar |
| Cold water inlet temperature | | | | °C |
| Hot water has been checked at all outlets | Yes | | Temperature | °C |
| Water flow rate | | | | l/min |

| **CONDENSING BOILERS ONLY** | | |
|---|---|---|
| The condensate drain has been installed in accordance with the manufacturer's instructions and/or BS5546/BS6798 | Yes | |

| **ALL INSTALLATIONS** | | | | | | | |
|---|---|---|---|---|---|---|---|
| Record the following: | At max. rate: | CO | ppm | **AND** | $CO/CO_2$ | Ratio | |
| | At min. rate: (where possible) | CO | ppm | **AND** | $CO/CO_2$ | Ratio | |
| The heating and hot water system complies with the appropriate Building Regulations | | | | | | Yes | |
| The boiler and associated products have been installed and commissioned in accordance with the manufacturer's instructions | | | | | | Yes | |
| The operation of the boiler and system controls have been demonstrated to and understood by the customer | | | | | | Yes | |
| The manufacturer's literature, including Benchmark Checklist and Service Record, has been explained and left with the customer | | | | | | Yes | |

| |
|---|
| Commissioning Engineer's Signature |
| Customer's Signature |
| (To confirm satisfactory demonstration and receipt of manufacturer's literature) |

*All installations in England and Wales must be notified to Local Authority Building Control (LABC) either directly or through a Competent Persons Scheme. A Building Regulations Compliance Certificate will then be issued to the customer.

benchmark COLLECTIVE MARK
THE MARK OF QUALITY FOR THE INSTALLATION, COMMISSIONING AND SERVICING OF DOMESTIC HEATING AND HOT WATER SYSTEMS



© Heating and Hotwater Industry Council (HHIC)

## SERVICE RECORD

**It is recommended that your heating system is serviced regularly and that the appropriate Service Interval Record is completed.**

**Service Provider**

Before completing the appropriate Service Record below, please ensure you have carried out the service as described in the manufacturer's instructions. Always use the manufacturer's specified spare part when replacing controls.

| SERVICE 01 | | | | | Date: |
|---|---|---|---|---|---|
| Engineer name: | | | | | |
| Company name: | | | | | |
| Telephone No: | | | | | |
| Gas safe register No: | | | | | |
| Record: | At max. rate: | CO | ppm | **AND** | $CO_2$ % |
| | At min. rate: (Where Possible) | CO | ppm | **AND** | $CO_2$ % |
| Comments: | | | | | |
| Signature | | | | | |

| SERVICE 02 | | | | | Date: |
|---|---|---|---|---|---|
| Engineer name: | | | | | |
| Company name: | | | | | |
| Telephone No: | | | | | |
| Gas safe register No: | | | | | |
| Record: | At max. rate: | CO | ppm | **AND** | $CO_2$ % |
| | At min. rate: (Where Possible) | CO | ppm | **AND** | $CO_2$ % |
| Comments: | | | | | |
| Signature | | | | | |

| SERVICE 03 | | | | | Date: |
|---|---|---|---|---|---|
| Engineer name: | | | | | |
| Company name: | | | | | |
| Telephone No: | | | | | |
| Gas safe register No: | | | | | |
| Record: | At max. rate: | CO | ppm | **AND** | $CO_2$ % |
| | At min. rate: (Where Possible) | CO | ppm | **AND** | $CO_2$ % |
| Comments: | | | | | |
| Signature | | | | | |

| SERVICE 04 | | | | | Date: |
|---|---|---|---|---|---|
| Engineer name: | | | | | |
| Company name: | | | | | |
| Telephone No: | | | | | |
| Gas safe register No: | | | | | |
| Record: | At max. rate: | CO | ppm | **AND** | $CO_2$ % |
| | At min. rate: (Where Possible) | CO | ppm | **AND** | $CO_2$ % |
| Comments: | | | | | |
| Signature | | | | | |

| SERVICE 05 | | | | | Date: |
|---|---|---|---|---|---|
| Engineer name: | | | | | |
| Company name: | | | | | |
| Telephone No: | | | | | |
| Gas safe register No: | | | | | |
| Record: | At max. rate: | CO | ppm | **AND** | $CO_2$ % |
| | At min. rate: (Where Possible) | CO | ppm | **AND** | $CO_2$ % |
| Comments: | | | | | |
| Signature | | | | | |

| SERVICE 06 | | | | | Date: |
|---|---|---|---|---|---|
| Engineer name: | | | | | |
| Company name: | | | | | |
| Telephone No: | | | | | |
| Gas safe register No: | | | | | |
| Record: | At max. rate: | CO | ppm | **AND** | $CO_2$ % |
| | At min. rate: (Where Possible) | CO | ppm | **AND** | $CO_2$ % |
| Comments: | | | | | |
| Signature | | | | | |

| SERVICE 07 | | | | | Date: |
|---|---|---|---|---|---|
| Engineer name: | | | | | |
| Company name: | | | | | |
| Telephone No: | | | | | |
| Gas safe register No: | | | | | |
| Record: | At max. rate: | CO | ppm | **AND** | $CO_2$ % |
| | At min. rate: (Where Possible) | CO | ppm | **AND** | $CO_2$ % |
| Comments: | | | | | |
| Signature | | | | | |

| SERVICE 08 | | | | | Date: |
|---|---|---|---|---|---|
| Engineer name: | | | | | |
| Company name: | | | | | |
| Telephone No: | | | | | |
| Gas safe register No: | | | | | |
| Record: | At max. rate: | CO | ppm | **AND** | $CO_2$ % |
| | At min. rate: (Where Possible) | CO | ppm | **AND** | $CO_2$ % |
| Comments: | | | | | |
| Signature | | | | | |

| SERVICE 09 | | | | | Date: |
|---|---|---|---|---|---|
| Engineer name: | | | | | |
| Company name: | | | | | |
| Telephone No: | | | | | |
| Gas safe register No: | | | | | |
| Record: | At max. rate: | CO | ppm | **AND** | $CO_2$ % |
| | At min. rate: (Where Possible) | CO | ppm | **AND** | $CO_2$ % |
| Comments: | | | | | |
| Signature | | | | | |

| SERVICE 10 | | | | | Date: |
|---|---|---|---|---|---|
| Engineer name: | | | | | |
| Company name: | | | | | |
| Telephone No: | | | | | |
| Gas safe register No: | | | | | |
| Record: | At max. rate: | CO | ppm | **AND** | $CO_2$ % |
| | At min. rate: (Where Possible) | CO | ppm | **AND** | $CO_2$ % |
| Comments: | | | | | |
| Signature | | | | | |

*All installations in England and Wales must be notified to Local Authority Building Control (LABC) either directly or through a Competent Persons Scheme. A Building Regulations Compliance Certificate will then be issued to the customer.

benchmark COLLECTIVE MARK
THE MARK OF QUALITY FOR THE INSTALLATION, COMMISSIONING AND SERVICING OF DOMESTIC HEATING AND HOT WATER SYSTEMS

© Heating and Hotwater Industry Council (HHIC)

## Baxi Customer Support

**0344 871 1525**

**Opening hours**

Monday - Friday, 8.00am-6.00pm

Weekends and Bank Holidays, 8.30am-2.00pm

Please note calls may be recorded for training and monitoring purposes

**baxi.co.uk**

**Register now to activate your warranty:**

**www.baxi.co.uk/registration**

**For the warranty to be maintained, please make sure...**

1. Benchmark checklist is completed
2. Warranty is registered with Baxi
3. The boiler has an annual service

For full terms and conditions, visit www.baxi.co.uk/terms. Failure to adhere to terms and conditions will void your manufacturer's warranty.

Baxi
Brooks House,
Coventry Road,
Warwick, CV34 4LL

0086

benchmark COLLECTIVE MARK
THE MARK OF QUALITY FOR THE INSTALLATION, COMMISSIONING AND SERVICING OF DOMESTIC HEATING AND HOT WATER SYSTEMS

Please ensure the boiler is installed in accordance with these installation instructions and that you adhere to the Building Regulations.

e&oe
All descriptions and illustrations provided in this document have been carefully prepared but we reserve the right to make changes and improvements in our products which may affect the accuracy of the information contained in this leaflet. All goods are sold subject to our standard Conditions of Sale which are available on request.

part of BAXI

7221756 - 01 (04/15)