POTTERTON

OIL FIRED BOILERS

Installation & Service Instructions

Statesman

System L, Flowsure L, Flowsure + L

About the Boiler

This is a Floor Standing, Horizontally Fired, Automatic Pressure Jet Oil Boiler.
The boiler can be flued conventionaly or with a kit as a balanced flue.
This boiler is for use with Kerosine and for use in GB & IE.
This boiler can be converted for use with Gas Oil.

About Safety

Installation must be in accordance with the Installation & Service Instructions and the rules in force.

Leave these instructions with the user for use on future calls.

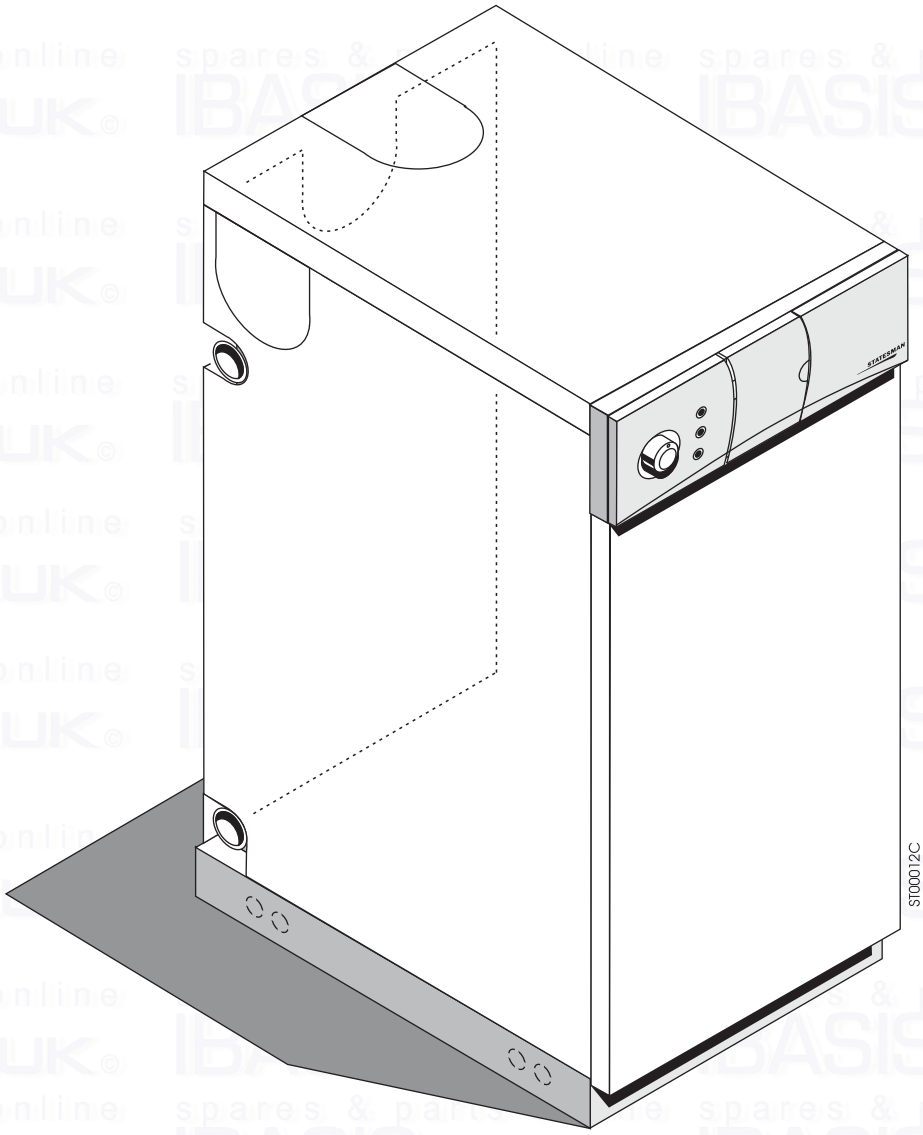

spares & parts online IBASIS.CO.UK

Contents

Section 1 - Technical Data.....4

Health & Safety Information.....4
System Components.....5
Boiler Wiring Diagrams.....9
Technical Data.....12
Boiler Dimensions & Clearances.....13
Flue Layouts.....14

Section 2 - Pre-Installation Requirements.....15

Chimneys/Flues.....16
Combustion & Ventilation Air Requirements.....17
Balanced & Low Level Terminal Clearances.....18
Oil Tanks & Layouts.....20
Floor Temperatures.....22
Sealed System Requirements.....22

Section 3 - Installation & Commissioning.....26

Conventional Flue.....27
Electricity Supply.....27
Fuel Pipes.....28
Wiring Diagrams.....29
Water Connections.....31
Commissioning.....33

Section 4 - Servicing & Maintenance.....36

Servicing.....36
Maintenance.....37
Replacement of Parts.....37
Thermostats - Statesman System.....38
Limit Thermostat.....38
Boiler Control Thermostat.....38
Thermostats - Statesman Flowsure/Flowsure+.....39
Boiler Control Thermostat.....39
Limit Thermostat.....39
Pump Overrun Thermostat.....39
Tank Limit Thermostat.....39
DHW Overheat Thermostat.....39
Heatstore Thermostat.....39
Automatic Air Vent.....39
Pressure Relief Valve.....40
Circulating Pump.....40
Expansion Vessel.....40
Pressure & Temperature Gauge.....40
Diverter Valve.....40
Flow Switch.....40
Domestic Service Cock.....41
Flow Restrictor.....41
DHW Hot Water Plate Heat Exchanger.....41

Section 5 - Fault Finding.....44

Burner does not start, motor does not run.....44
Burner starts, no flame established, no oil to burner.....44
Burner starts, no flame but oil to burner.....45
Burner starts, flame established but goes to lockout after 15 seconds.....45
Locks out in mornings only.....45
Flame established but not maintained.....46
Burner runs but smoke, and or smell, and or pulsation.....46
Other problems.....47

Section 6 - Spare Parts.....48

Section 7 - Flue Kit Options.....50

WARNING ! - this is about YOUR safety

Safe use of Kerosines and Gas Oils

Hazards

These fuels give off a flammable vapour when heated even moderately.

This vapour ignites easily, burns fiercely and can be explosive.

Vapour can flow along at ground level and collect as an explosive mixture in drains, cellars etc. at considerable distances from open containers or spillages.

Fuels remove natural oils and fats, and may thus cause cracking and irritation of the skin.

Gas oil may also cause irreversible damage to your health on prolonged or repeated skin contact.

Precautions

ALWAYS HANDLE	fuels in the open air or in a well ventilated place, well away from all sources of ignition such as fires, sparks, hot surfaces and **DO NOT SMOKE**.
ALWAYS DRAIN	fuels using a proper fuel retriever, mechanical siphon or funnel.
NEVER SUCK	fuels up a tube by mouth. If accidentally swallowed - call a doctor - **DO NOT INDUCE VOMITING**.
NEVER APPLY	heat to a fuel tank, pipework or container.
AVOID INHALING	fuel vapour; it can make you light-headed and seriously impair your judgement.
ALWAYS STORE	fuels in a properly constructed and labelled tank.

If there is a Fuel Spillage

IMMEDIATELY	**STOP/SWITCH OFF** all electrical and other ignition risks
REMOVE	all contaminated clothing to safeguard yourself against fire risk and skin damage. Wash the affected skin thoroughly with soap and water and remove the clothing to a safe, well ventilated place and allow to air before washing or dry cleaning.
CONTAIN	and smother the spill using sand, soil or other suitable incombustible material.
DO NOT ALLOW	spilled fuel to escape into drains or water courses. If fuel does enter a drain, warn the Water Authority and Fire Brigade.
CONSULT	your Local Authority about disposal of contaminated soil.
FIRST AID	if fuel is accidentally swallowed, **SEEK IMMEDIATE MEDICAL ATTENTION - DO NOT INDUCE VOMITING**.
	if fuel is splashed into eyes, wash out with running water for at least 10 minutes and **SEEK IMMEDIATE MEDICAL ATTENTION**.

1 - Technical Data

- The Statesman boilers are horizontally fired, automatic pressure jet boilers. These boilers are intended for use on indirect central heating systems. Their use on direct systems is not recommended.
- The boilers as supplied can be installed directly to suitable conventional chimneys. For balanced flue installations, an appropriate flue kit is additionally required.
- The Statesman boilers have been independently tested to standards EN 55014 and EN 50082-1 and show compliance with the E.M.C. Directive 89/336/EEC.
- The boiler has an easily removable front access door which gives quick access for cleaning.
- The maximum static head of water permissible is 27.44 metres (90 ft).
- Water flow and return connections are provided on each side and rear of the boiler (dependant on model).

Note: When installing the boiler, make sure all unwanted tappings are blanked off.

Health & Safety Information for the Installer & Service Engineer

Under the Consumer Protection Act 1987 and Section 6 of the Health and Safety at Work Act 1974, we are required to provide information on substances hazardous to health.

Small quantities of adhesives and sealants used in the product are cured and present no known hazards when used in the manner for which they are intended. The following substances are also present:

Insulation and Seals

Material - Man Made Mineral Fibre.
Description - Boards, Ropes, Gaskets.
Known Hazards - Some people can suffer reddening and itching of the skin. Fibre entry into the eye will cause foreign body irritation which can cause severe irritation to people wearing contact lenses. Irritation to respiratory tract.
Precautions - Dust goggles will protect eyes. People with a history of skin complaints may be particularly susceptible to irritation. High dust levels are only likely to arise following **harsh** abrasion. In general, normal handling and use will not present high risk, follow good hygiene practices, wash hands before, touching eyes, consuming food, drinking or using the toilet.
First Aid - Medical attention must be sought following eye contact or prolonged reddening of the skin.

Flue Gas Sampling Point

To aid commissioning, a flue gas sampling point is built into the heat exchanger front access door. If this door is removed make sure that when re-fitted, the sampling point is at the top.

Oil Pipe Installation

The boiler base features "Knock Out" holes for installation purposes. Remove using a drift or dot punch as required. Grommets are provided for cable protection within the connection pack. Additional holes have been provided in the front of each side of the base. These are to provide more options when bringing in the fuel hoses and if required, electrical wiring.

Burner

The burner is an automatic pressure jet type, pre-wired, with a photocell flame failure control.
The standard burner fitted is the Riello RDB with different combustion heads to suit boiler ratings.

Boiler Thermostats

A pre-wired control thermostat is provided with each boiler. This thermostat is calibrated to give a maximum boiler temperature of 82°C (180 °F) and a minimum temperature of 55 °C (130 °F). Under no circumstances should the boiler be operated below the minimum indicated setting, or below a flow temperature of 55 °C (130 °F). For best operation it is suggested that the boiler should be operated at a setting just below maximum on the thermostat setting. The boiler also has a limit (overheat) thermostat calibrated to operate at 110 °C (230 °F). This is located on the underside of the control panel, see the Users Instructions.

Statesman System

System & Boiler Control

Due to the high efficiency of the Statesman boilers, the following should be taken into consideration during installation:-

Control of the Boiler: When the demand for heating and/or hot water is satisfied, the controls should be arranged such that the burner is switched off. If due to the system design nuisance tripping of the overheat thermostat occurs, it may be advisable to fit a pump overrun device (Incorporating a by-pass system where necessary).

Statesman System, Flowsure & Flowsure+

Principal boiler components

Automatic and Manual Air Vents

Manual air vents are provided on the Flowsure and Flowsure+ only.

Pressure Relief Valve

This is factory set at 3 bar (45 lb/in²).

Pump

An integral circulating pump is incorporated within the boiler casing. This also serves the functions of both the central heating circuit and domestic hot water (Flowsure/Flowsure+).

Expansion Vessel

A 10 litre expansion vessel, charged to 0.5 bar and is suitable for a static head of 5 metres (16.5 ft), is included within the boiler casing.

Diverter Valve

On the Flowsure and Flowsure+, a motorised diverter valve is located on the pump outlet. The valve is normally closed to the central heating circuit and is powered open when there is a demand for central heating via the room thermostat.

Flow Switch

On the Flowsure and Flowsure+, the domestic mains water inlet is connected to a flow switch, this detects when a domestic hot water tap has been opened. This activates the burner and pump.

Domestic Service Cock

The domestic service cock fitted to the mains water inlet of the Flowsure and Flowsure +, incorporates a pre-set flow regulation device, this restricts the maximum flow of domestic hot water to the taps, 13 l/m and 17.5 l/m respectively.

Domestic Hot Water Heat Exchanger

On the Flowsure and Flowsure+, a water to water heat exchanger is located within the boiler casing. Primary water is pumped from the boiler (heatstore tank on Flowsure+) to the heat exchanger whenever there is a flow of domestic water through a hot water tap. The domestic water thereby extracts the heat from the plate heat exchanger giving mains pressure domestic hot water. The domestic hot water temperature can be increased by reducing the water flow rate at the tap (Flowsure) or adjusting the hot water mixing valve to a higher setting (Flowsure+).

Pump overrun

On the Flowsure and Flowsure+, a pump overrun facility has been incorporated into the electrical control panel which allows excess heat to be dissipated to either the central heating circuit or boiler shell, dependant on mode selected. This prevents the possibility of the boiler overheating.

Heatstore tank

On the Flowsure+, the heatstore tank is a heatbank containing 40 litres (8.8 gallons) of primary hot water. The tank temperature is controlled by the DHW thermostat to approximately 75 °C.

Note: A bypass system should be fitted between the flow and return pipes, where primary water flow may be prevented during a pump overrun situation (Flowsure, Flowsure+).

DHW Mixing Valve (Flowsure+ Only)

The DHW mixing valve is factory set to the mid position, this will give a blended water temperature of approximately 60°C. After removing the front casing (Pull forward off the mounting clips), the control knob (top right, behind control panel) will be accessible and can be turned as required. Clockwise to decrease and anti-clockwise to increase temperature - See Fig. 4. for the position of the valve.

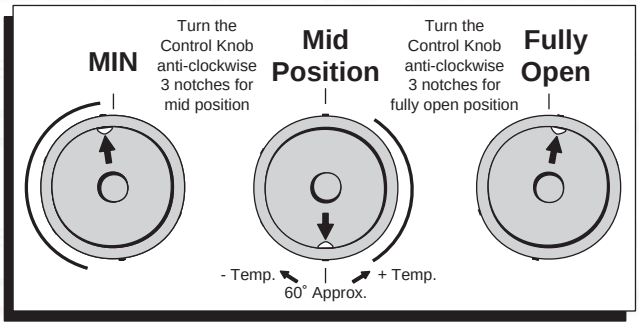

ST00193A

Fig. 1

Statesman System

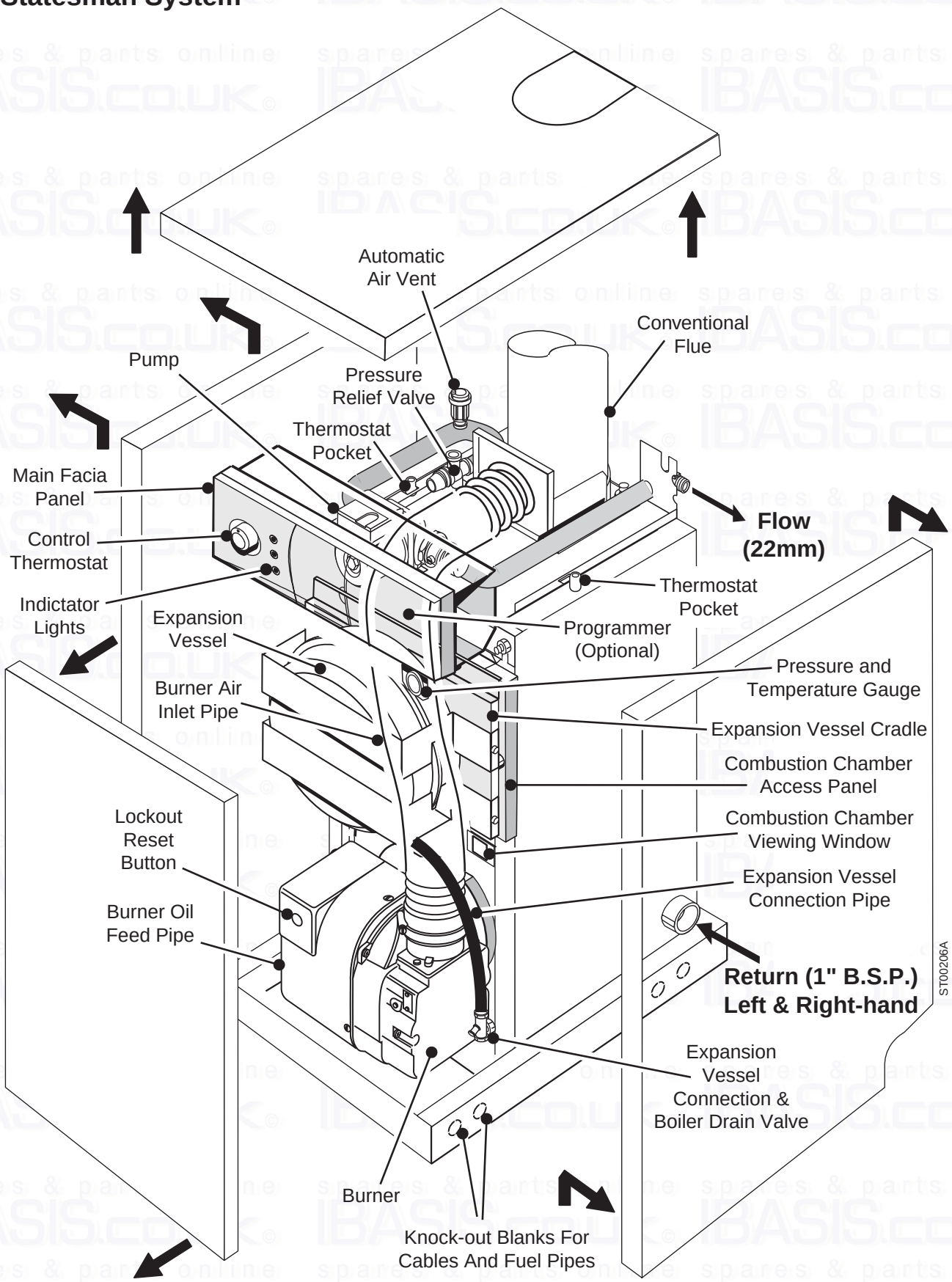

Fig. 2

Statesman Flowsure

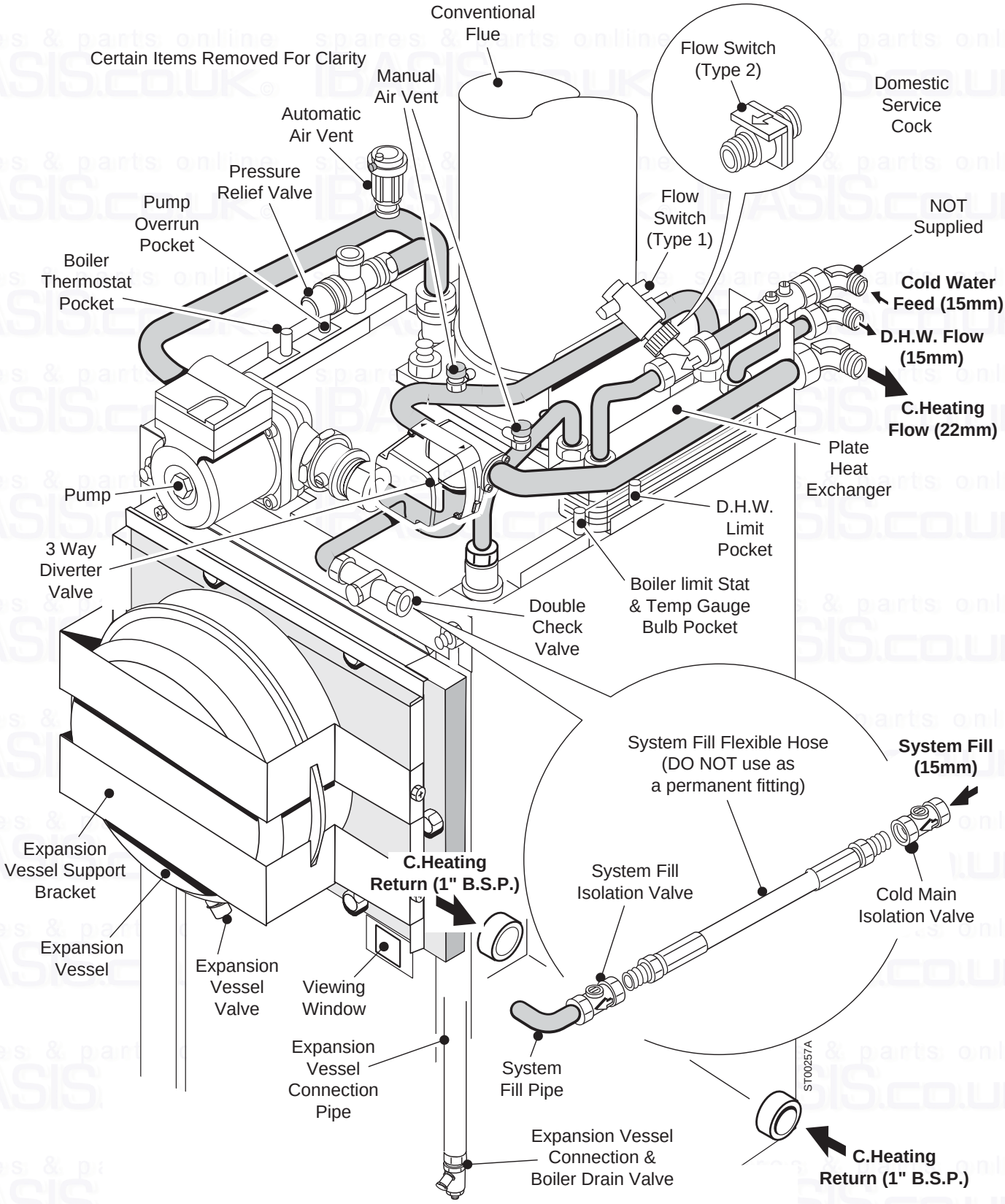

Fig. 3

Statesman Flowsure +

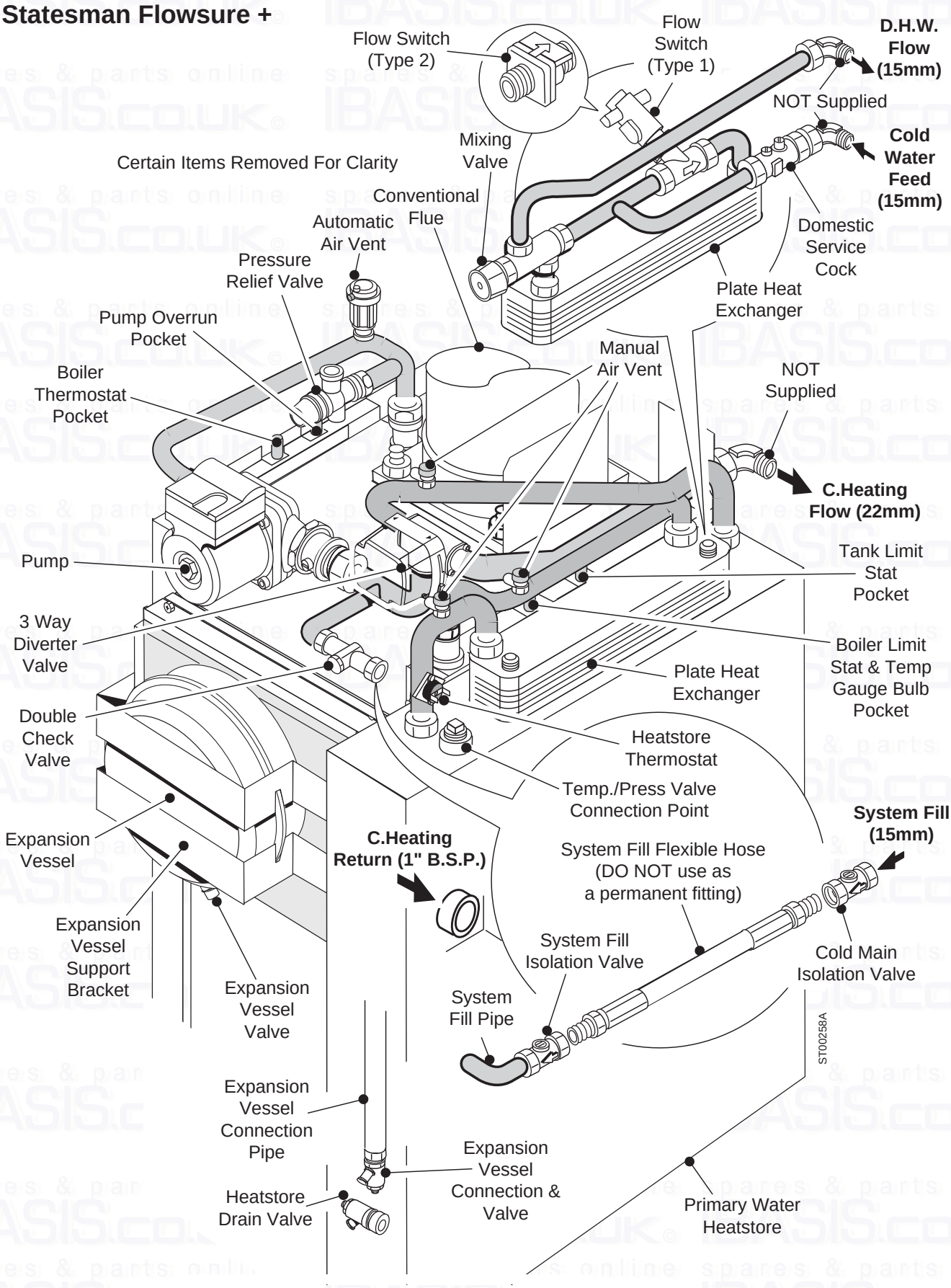

Fig. 4

Boiler Wiring Diagram - Statesman System

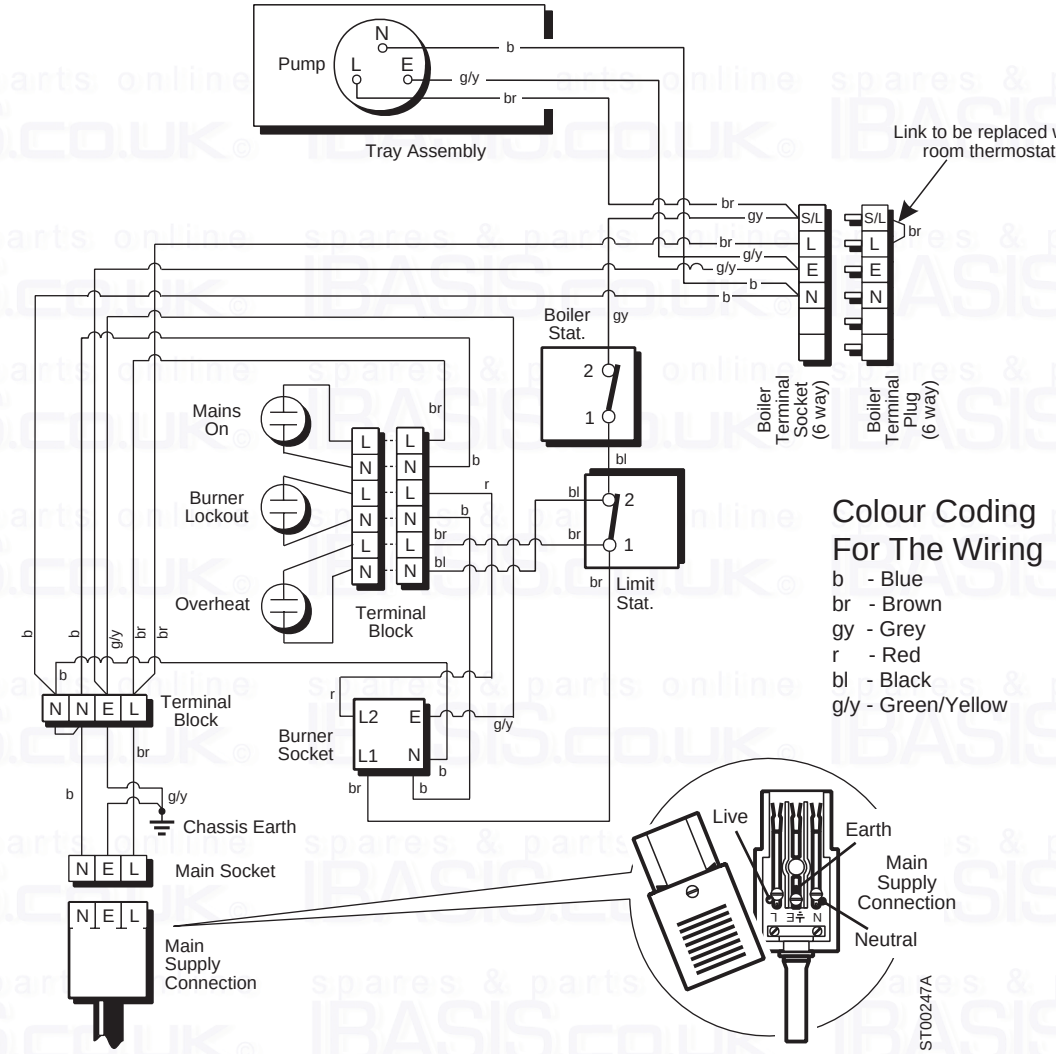

Fig. 5

Boiler Wiring Diagram - Statesman Flowsure

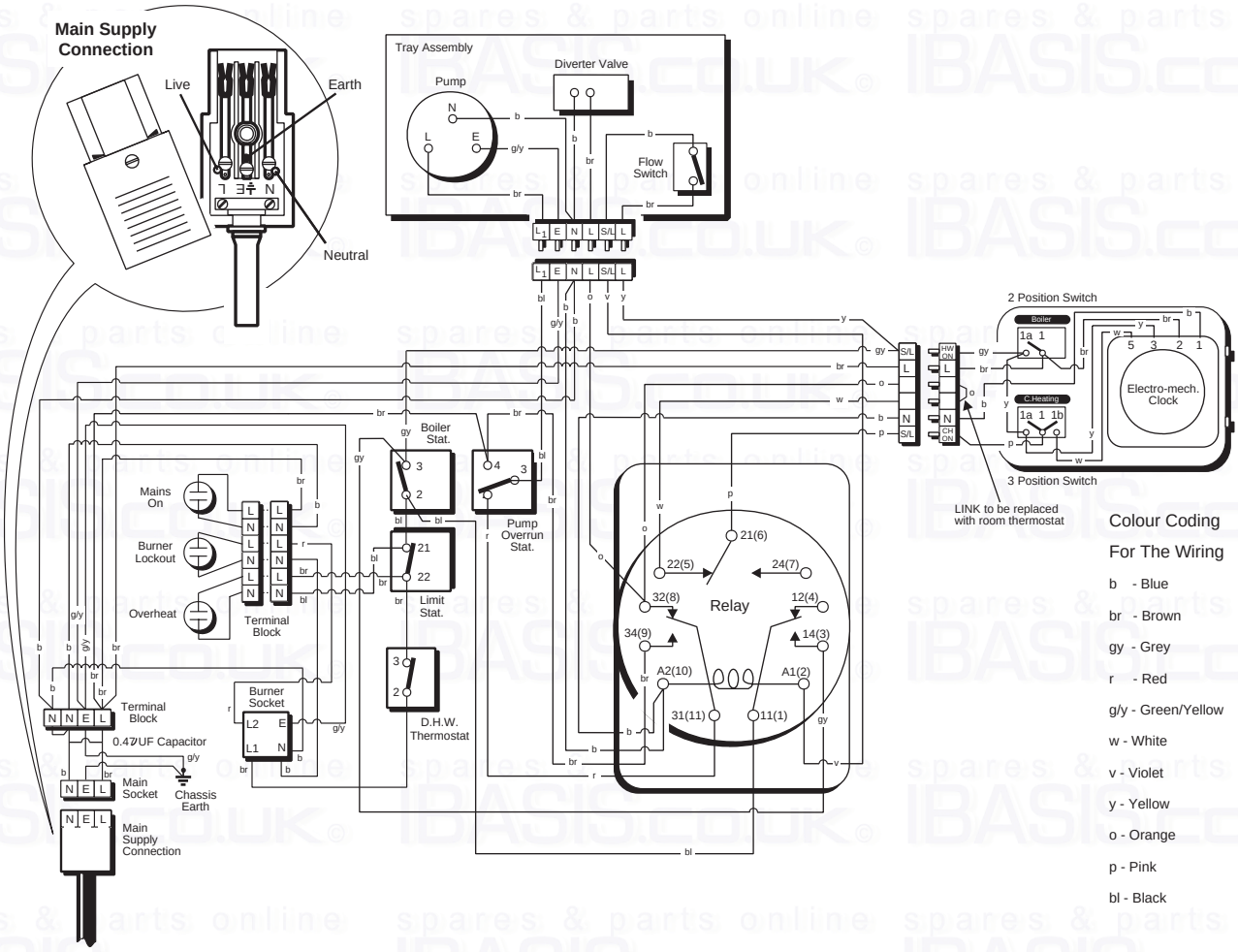

Boiler Functional Flow - Statesman Flowsure

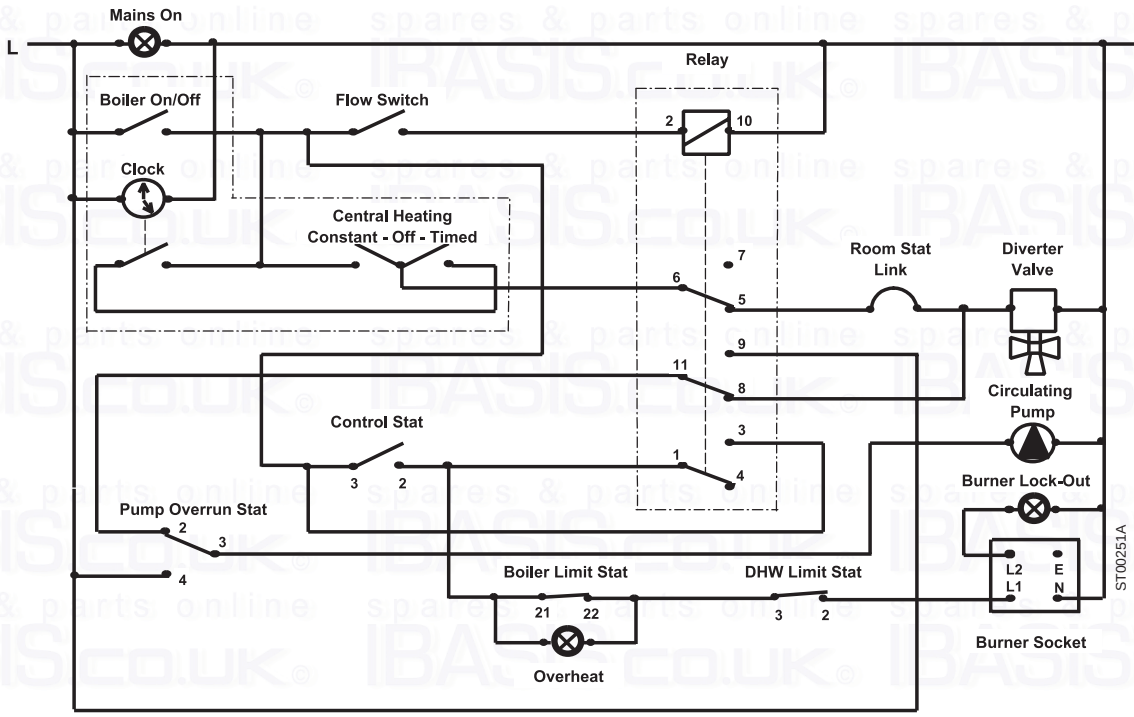

Fig. 6

Boiler Wiring Diagram - Statesman Flowsure +

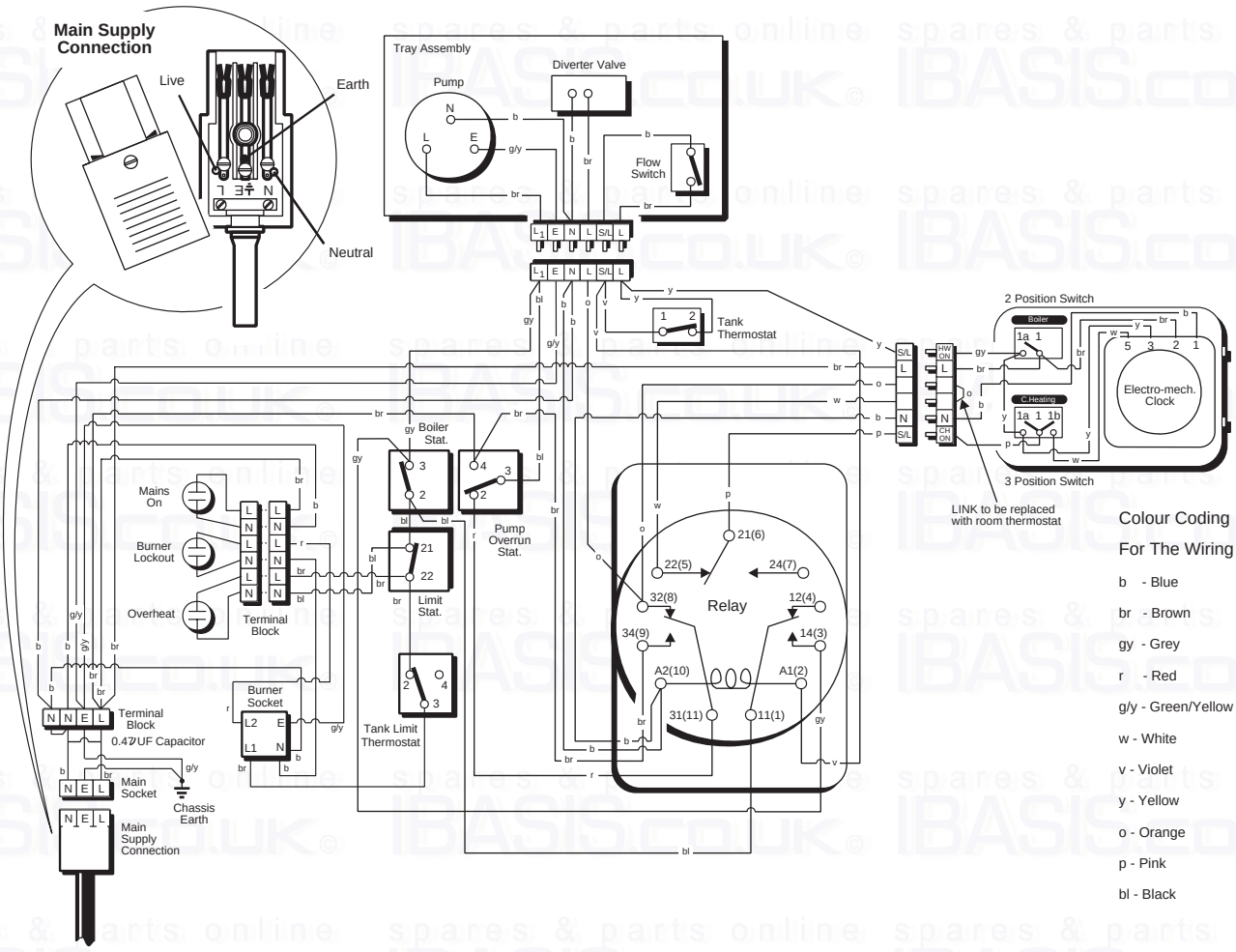

Boiler Functional Flow - Statesman Flowsure +

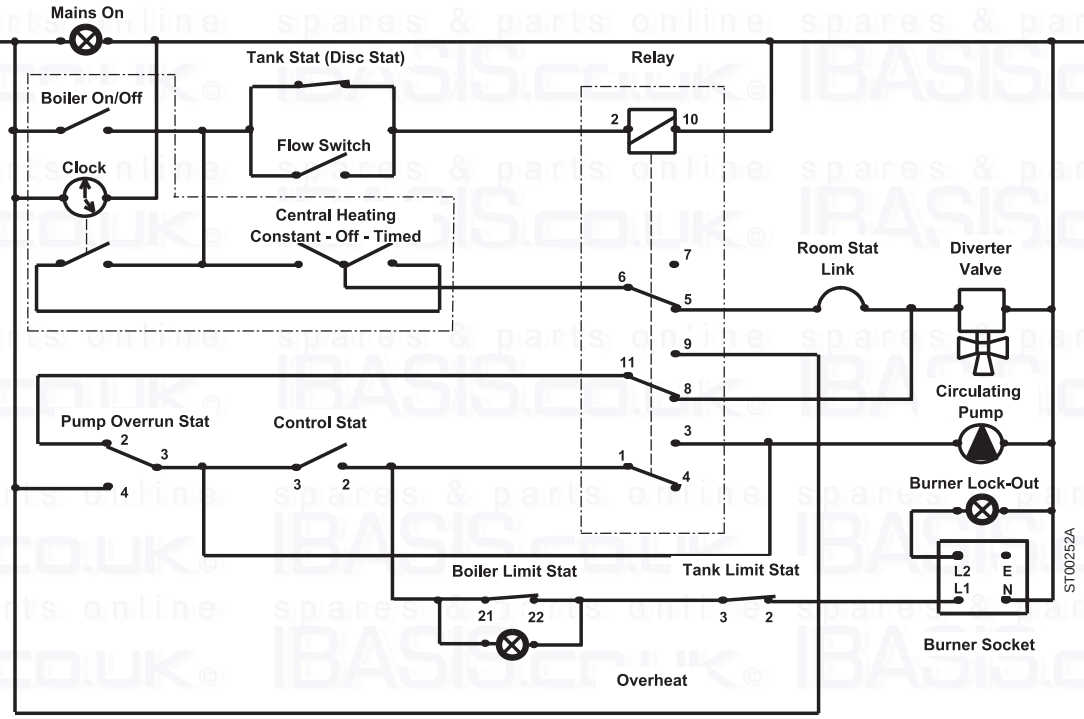

Fig. 7

Technical Data

Model		System 70/90		Flowsure 70/90		Flowsure+ 70/90	
		Btu/h	kW	Btu/h	kW	Btu/h	kW
Maximum Output		89,000	26	89,000	26	89,000	26
Minimum Output		68,000	20	68,000	20	68,000	20
Factory Set Output	Kerosene	79,000	23	79,000	23	79,000	23
Riello Burner Type		RDB1		RDB1		RDB1	
Combustion Head Type	Kerosene	LD3		LD3		LD3	
	Gas Oil	LD3		LD3		LD3	
Nett Full Load Efficiency	%	91.0		91.0		91.0	
Boiler Gas Volume	m³	0.058		0.058		0.058	
Exit Flue Gas Mass Flow (Max)	kg/h	40.09		40.09		40.09	
Flue Gas Temperature Rise Above Ambient	ºC	205		205		205	
Resistance To Combustion Products	mbar	0.4		0.4		0.4	
Maximum Hearth Temperature	ºC	50		50		50	
Water Side Resistance (Cold)							
10ºC Differential	mbar	21.2		21.2		21.2	
20ºC Differential	mbar	6.7		6.7		6.7	
Maximum Static Head		90ft. Water (40 p.s.i.)					
Minimum Static Head		5.0ft. Water (3.0 p.s.i.)					
Maximum Operating Temperature		82ºC (180ºF)					
Minimum Operating Temperature		55ºC (131ºF)					
Maximum Boiler Operating Pressure		3 Bar (43.5 p.s.i.) (Class 2)					
Conventional Flue Draught at Boiler Flue Outlet		0.035"w.g. (8.75N/m²) Minimum 0.16"w.g. (40.0N/m²) Maximum					
Limit Thermostat Setting		110ºC (230ºF) Manual Reset					
Maximum Casing Panel Temperature		Less Than 35ºC Above Room Temperature					
Maximum Surface Temperatures of							
Adjusting, Control & Safety Devices		Less Than 30ºC Above Room Temperature					
Electrical Supply		230V 1 Phase 50Hz Fuse 5A					
DHW Limit Thermostat Setting				85ºC (185°F)			
DHW Store Thermostat Setting						73ºC (163F)	
DHW Store Limit Thermostat Setting						88ºC (190ºF)	
Pump Overrun Thermostat Setting				80ºC (176ºF)		88ºC (190ºF)	
Flow Restrictor				13 l/m (Brown)		17.5 l/m (Green)	
Maximum DHW Flow Rate				13 ± 1.5 l/m (2.9 ± 0.3 g/m)		17.5 ± 1.5 l/m (3.9 ± 0.3 g/m)	
Minimum DHW Flow Rate				2.5 ± 0.5 l/m (0.5 ± 0.1 g/m)		2.5 ± 0.5 l/m (0.5 ± 0.1 g/m)	
Maximum DHW Inlet Pressure				10 Bar (145 p.s.i.)		10 Bar (145 p.s.i.)	
Minimum DHW Inlet Pressure				1 Bar (14.5 p.s.i.)		1 Bar (14.5 p.s.i.)	
Specific Rate at Minimum Heat Input (20 kW)				9.5 l/m (2.1 g/m)		12.5 l/m (2.7 g/m)	
DHW Temperature Rise At a Constant	35ºC			8.5 l/m (1.9 g/m)		11.0 l/m (2.4 g/m)	
	50ºC			5.5 l/m (1.2 g/m)		7.0 l/m (1.5 g/m)	
Specific Rate at MId Heat Input (23 kW)				11.0 l/m (2.4 g/m)		14.0 l/m (3.1 g/m)	
DHW Temperature Rise At a Constant	35ºC			9.5 l/m (2.1 g/m)		12.0 l/m (2.6 g/m)	
	50ºC			6.5 l/m (1.4 g/m)		8.5 l/m (1.9 g/m)	
Specific Rate at Maximum Heat Input (26 kW)				12.0 l/m (2.6 g/m)		17.0 l/m (3.7 g/m)	
DHW Temperature Rise At a Constant	35ºC			10.5 l/m (2.3 g/m)		14.5 l/m (3.2 g/m)	
	50ºC			7.5 l/m (1.6 g/m)		10.0 l/m (2.2 g/m)	
Thermal Store Capacity						40 Litres	
Time to Achieve Storage Temperature at Max Heat I/P				7 Minutes (From Cold)		13 Minutes (From Cold)	

Table 1

Boiler Dimension & Clearances

Model				System	Flowsure	Flowsure+
Height		mm	A	850	850	850
Width		mm	B	490	490	590
Depth		mm	C	565	565	565
Centre of flue from rear		mm	D	100	100	100
Flue Diameter		mm	E	125	125	125
Height of bottom connection		mm	G	97	97	97
Distance of conn. from wall		mm	H	59	59	59
Return Connections	2off		J	1" B.S.P	1" B.S.P	
	1 off					1" B.S.P
Flow connections	1 off		K	22mm	22mm	22mm
Cold Mains Inlet					15mm	15mm
DHW Outlet					15mm	15mm
System Fill					15mm	15mm
Weight empty		kg		130	145	170
Water content		ltr		20.5	20.5	60.0
Water content		Imp		4.5	4.5	13.2
Oil Supply Connection		BSP		¼"	¼"	¼"
Installation	Front	mm		610	610	610
Clearances	Top	mm		12*	12*	12*
	Sides BF	mm		6	6	6
	Sides CF	mm		25	25	25

* If mounted under a worktop, the top needs to be removed

Table 2

SEDBUK Declaration for Statesman (Kerosine)

Model	Seasonal Efficiency (SEDBUK) (%)
System	85.1
Flowsure	82.3
Flowsure +	82.3

This value is used in the UK Government's Standard Assessment Procedure (SAP) for energy rating of dwellings. The test data from which it has been calculated have been certified by 1053.

SEDBUK Declaration for Statesman (Gas Oil - Mid Range)

Model	Seasonal Efficiency (SEDBUK) (%)
System	85.5
Flowsure	82.7
Flowsure +	82.9

This value is used in the UK Government's Standard Assessment Procedure (SAP) for energy rating of dwellings. The test data from which it has been calculated have been certified by 1053.

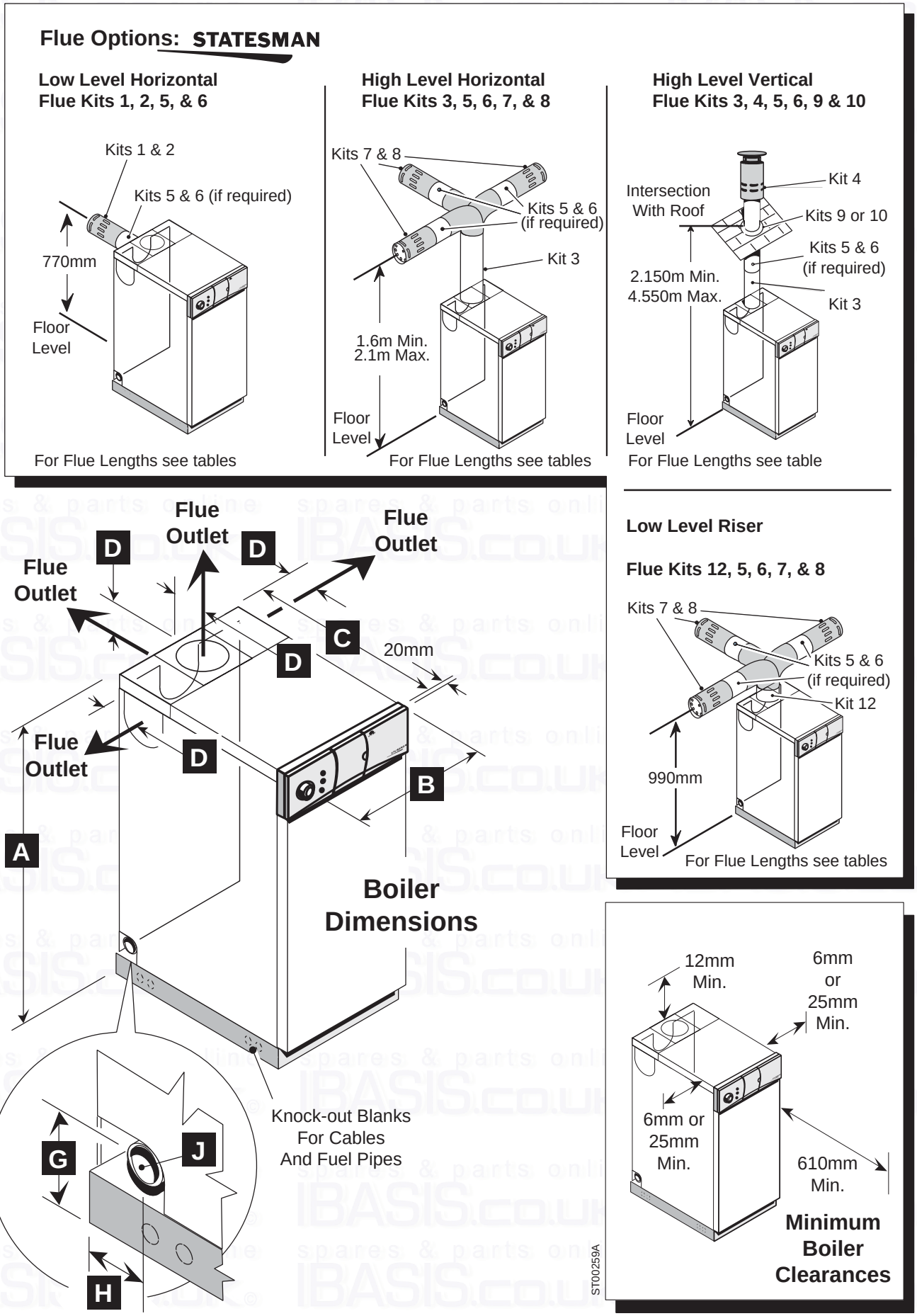
Flue Options: STATESMAN
Low Level Horizontal
Flue Kits 1, 2, 5, & 6
Kits 1 & 2
Kits 5 & 6 (if required)
770mm
Floor Level
For Flue Lengths see tables
High Level Horizontal
Flue Kits 3, 5, 6, 7, & 8
Kits 7 & 8
Kits 5 & 6 (if required)
Kit 3
1.6m Min.
2.1m Max.
Floor Level
For Flue Lengths see tables
High Level Vertical
Flue Kits 3, 4, 5, 6, 9 & 10
Intersection With Roof
Kit 4
Kits 9 or 10
Kits 5 & 6 (if required)
2.150m Min.
4.550m Max.
Kit 3
Floor Level
For Flue Lengths see table
Low Level Riser
Flue Kits 12, 5, 6, 7, & 8
Kits 7 & 8
Kits 5 & 6 (if required)
Kit 12
990mm
Floor Level
For Flue Lengths see tables
Flue Outlet
Flue Outlet
Flue Outlet
Flue Outlet
D
D
D
D
C
20mm
B
A
Boiler Dimensions
Knock-out Blanks For Cables And Fuel Pipes
G
J
H
12mm Min.
6mm or 25mm Min.
6mm or 25mm Min.
610mm Min.
Minimum Boiler Clearances
ST00259A

Fig. 8

2 - Pre-Installation Requirements

As with all building services, the oil fired systems have to be installed so as to ensure safe and efficient operation. The following notes provide a guide to current best practice. It is important that documents relating to Building Regulations and Standards are studied.

In addition we also recommend the following OFTEC publications:-

Technical Information Book 3
Installation requirements for oil fired boilers and oil storage tanks.

Technical Information Book 4
Domestic heating systems
These books are available from OFTEC, Century House, 100 High Street, Banstead, Surrey SM7 2NN.

Training
Potterton have several training centres around the country, for details of courses for oil firing telephone 01926 430481. OFTEC also hold training courses on oil fired central heating.

Regulations and Standards
The installation of oil fired boilers is covered by the requirements of the Building Regulations which are statutory instruments and must be complied with.

Those for England and Wales are made by the Department of the Environment in London.

The Building Standards (Scotland) Regulations are made by the Scottish Office. Part F of the Technical Standards to the Regulations covers heat producing appliances and fuel storage.

The Building Regulations (Northern Ireland) are made by the Northern Ireland Department of the Environment. Heat producing appliances, including oil heating appliances, are covered by Technical Booklet L.

The Isle of Man has its own Building Bye-laws. In the Channel Islands, Jersey and Guernsey have their own separate Building Bye-laws.

The British Standard covering oil fired boiler installation is BS5410. This is issued as Part 1:1977 for installations up to 45 kW and Part 2:1978 for larger installations. This standard also covers oil storage tank installations.

Additional standards and regulations

- BS 5449: 1990 Forced circulation hot water

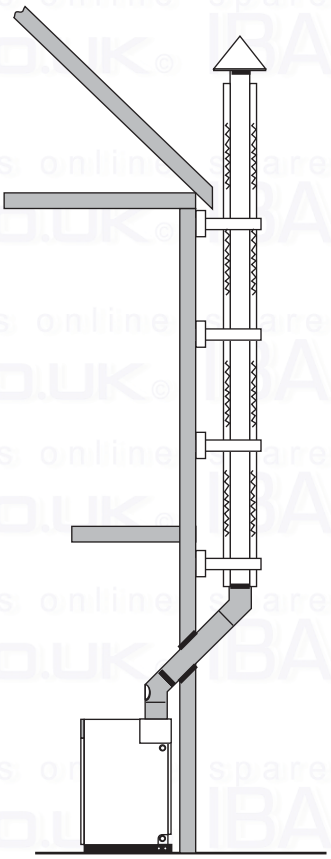

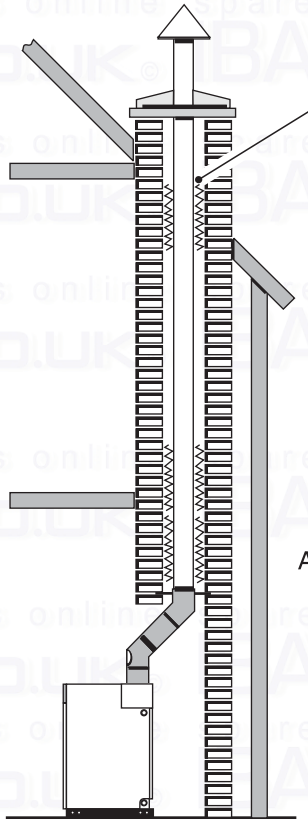

Fig. 9

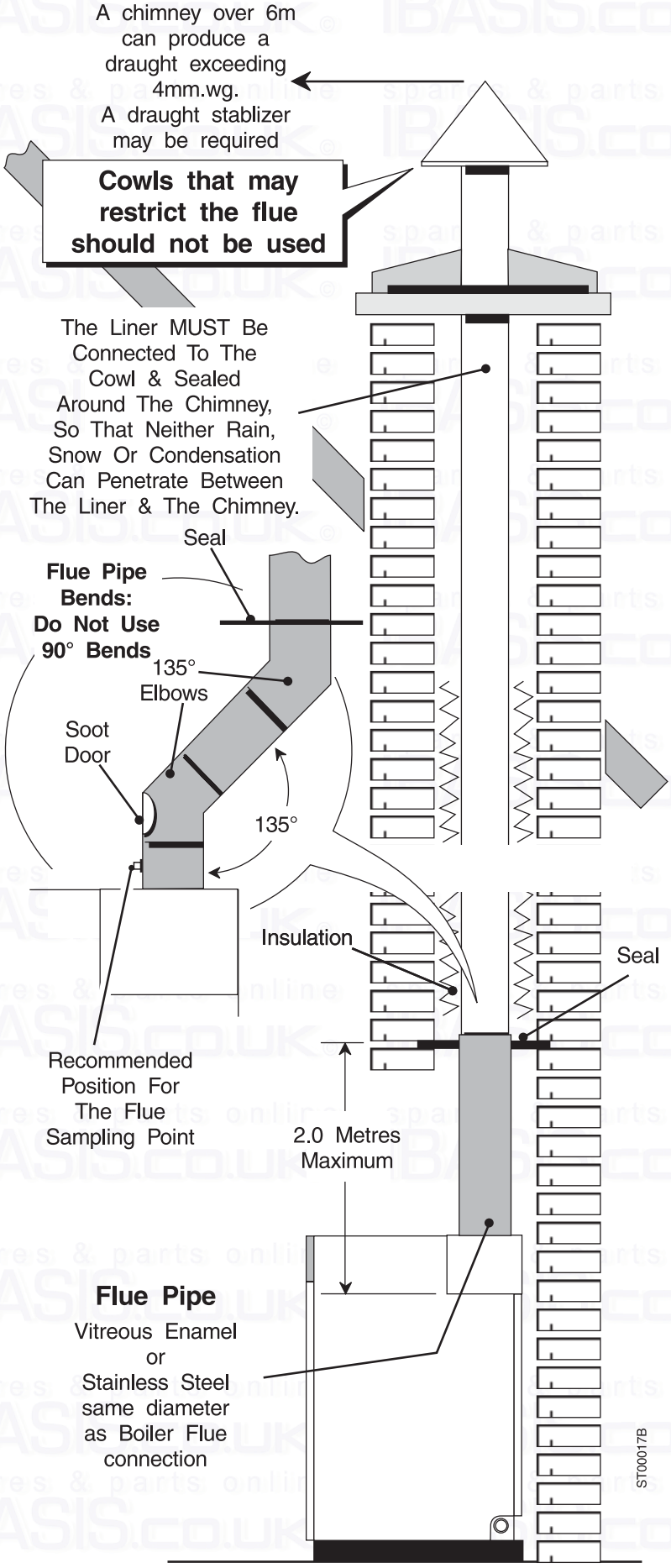

Fig. 10

central heating systems for domestic premises.

- BS 7074: Pt.1:1989 Application, selection and installation of expansion vessels and ancillary equipment for sealed systems.
- BS 7671 Requirements for electrical installations. IEE wiring regulations 16th edition.
- Control of pollution (oil) regulations.
- Local water undertakings bye-laws.

Chimney

Every Potterton boiler has a very high efficiency and care must be taken to ensure that the chimney is suitable.

Chimneys may have been already built and completed before a choice of appliance has been made. Alternatively, chimneys may be installed to suit the particular appliance chosen.

A factory made insulated chimney complying with the requirement of BS4543 may be considered as an alternative to a conventional structural chimney for both new and existing buildings. A further alternative may be a suitable form of insulated flue pipe normally positioned on a wall outside a building.

Capacity

The chimney or flue must have a cross-sectional area throughout its whole length, that is at least the area of the flue outlet of the boiler and must be sealed at the boiler with fire clay or other suitable compounds. As few bends as possible should be used and, where necessary, 135° bends are recommended.

Height

The chimney or flue should be of sufficient height to provide a minimum draught of 0.035" w.g. measured above the boiler. Draught conditions that are excessive i.e. above 0.16" w.g. due to chimney height or location, should be controlled by means of a draught stabiliser fitted to the chimney.

External Flues

All external flues of metal or other materials should have cleaning facilities, and be well insulated to maintain the correct draught conditions.

Internal Flues

The exposed flue pipe between the boiler flue off-take and the chimney proper (either internally or externally) must not be of asbestos. Vitreous Cast Iron, Steel or similar materials should be used.

Note: When installing the boiler into a chimney previously fitted with a liner, the liner must be replaced and made weather-tight.

Choice of Materials

The materials used in the construction of chimneys and flues must always be suitable for the application. Their construction must be durable, non-combustible, able to resist the range of temperatures expected; and also resistant to external as well as internal corrosion. This is particularly important due to the Statesman's high thermal efficiency, where correct choice of materials will prevent problems likely to be caused by condensation.

If you are in any doubt, you should seek advice of a reputable manufacturer of chimneys, names should be available from your local stockist.

Combustion & Ventilation Air for Open Flue Oil Fired Boilers

General. A sufficient permanent air supply to an appliance will be required.

a) For proper combustion of fuel and effective discharge of combustion products to the open air.
b) For the ventilation of any confined space in which an appliance is installed to prevent overheating of the appliance and any equipment in and near the appliance.
c) For the satisfactory operation of any draught break or stabilizer which may be fitted.

Air for Combustion

This requirement will be satisfied if the room or space in which the appliance is installed has an opening or duct which is designed to allow the passage of air at all times equivalent, in total free area, to 550 mm^2/kW (2.5 in^2 per 10,000 btu's) of the appliance rating.

If the space containing the appliance has an extract ventilation fan fitted, the supply of air should be such that the operation of the appliance and flue is unaffected when the windows and doors are closed and the extractor fan is running.

Air for Ventilation

For an appliance in a confined space, care shall be taken to provide air for ventilation. A working guide to the minimum free area of openings to be provided in addition to that for combustion air is as follows:

a) Where the air is taken from a heated space, 1100 mm^2/kW at high level and 1100 mm^2/kW (5.0 ins^2 per 10,000 Btu's) at low level.
b) Where the air is taken from outside, 550 mm^2/kW at both high level and low level (2.5 in^2 per 10,000 btu's) at low level.

The above requirements are essential, in particular for appliances which are installed with a low level discharge. The warranty for such boilers could be affected if proper free air requirements are not provided.

FREE AREAS OF GRILLES ARE MM^2 PER KW **OF APPLIANCE RATING (OUTPUT)**

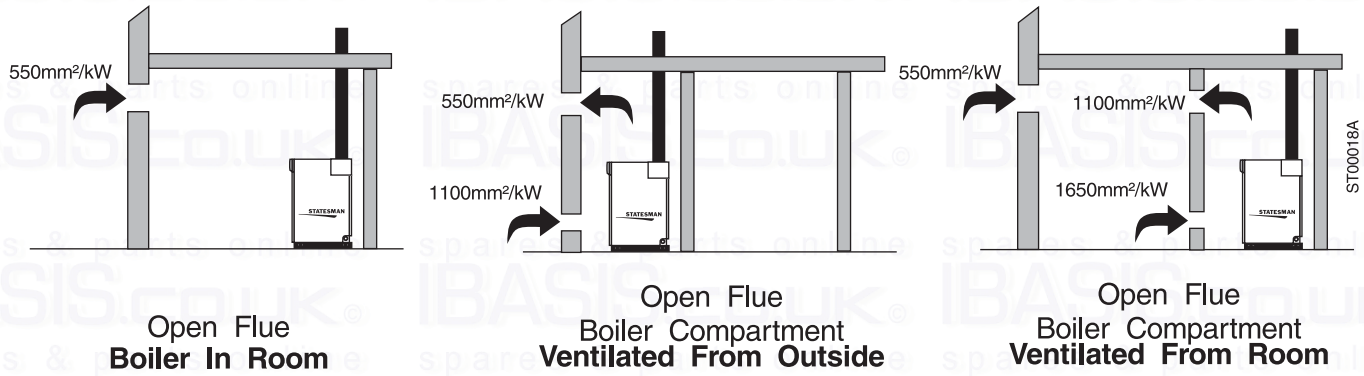

Open Flue
Boiler In Room

Open Flue
Boiler Compartment
Ventilated From Outside

Open Flue
Boiler Compartment
Ventilated From Room

Fig. 11

Extract Fans

If the room in which the appliance is located also has an extract fan the performance of the appliance must be unaffected when the fan is running with all doors and windows closed.

Draught Breaks

When an appliance with a draught break is fitted in a room add 550mm²/kW to the free area of the combustion air inlet.

When an appliance with a draught break in a compartment which is ventilated as noted above, no additional allowance is required.

Combustion & Ventilation Air for Balanced Flue Oil Fired Boilers

FREE AREAS OF GRILLES ARE mm² PER/KW **OF APPLIANCE RATING (OUTPUT)**

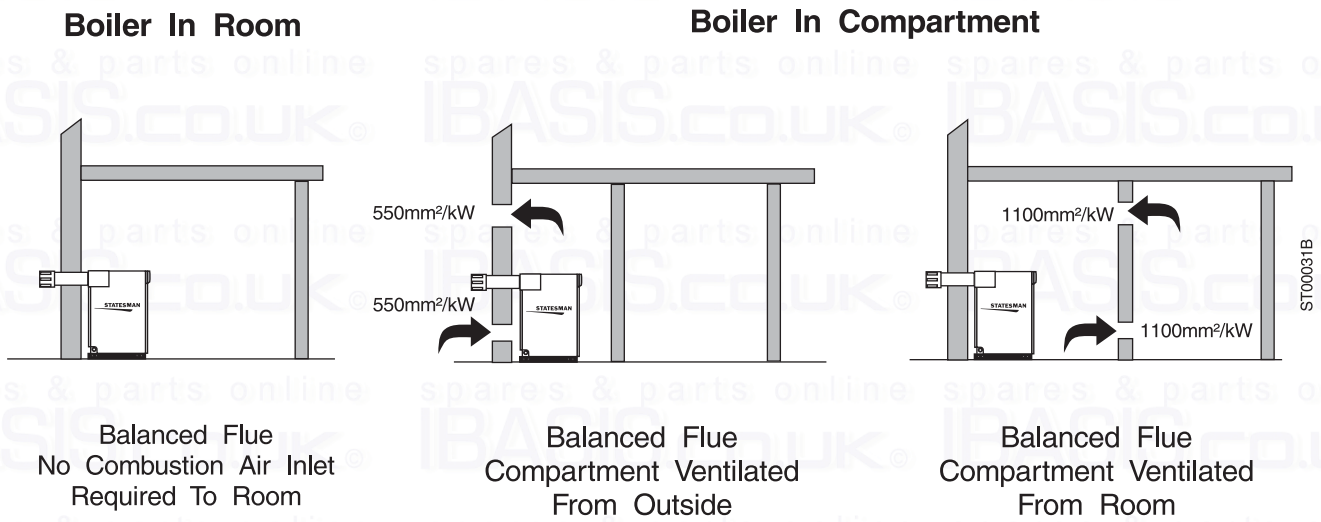

Fig. 12

Balanced Flue

Boilers fitted with balanced flues must only fire Kerosine and will not operate satisfactorily unless the free air requirements have been satisfied.

Consideration should be given to the texture of the wall onto which the low level flue terminal is fixed. As with all heat emitting devices the warm air from the terminal will encourage the accumulation of dirt which will at some time require removal with a detergent based cleaning fluid.

Clearances are shown on the next page.

Clearances Required Around Balanced and Low Level Discharge Flues Fitted to Oil Fired Boilers

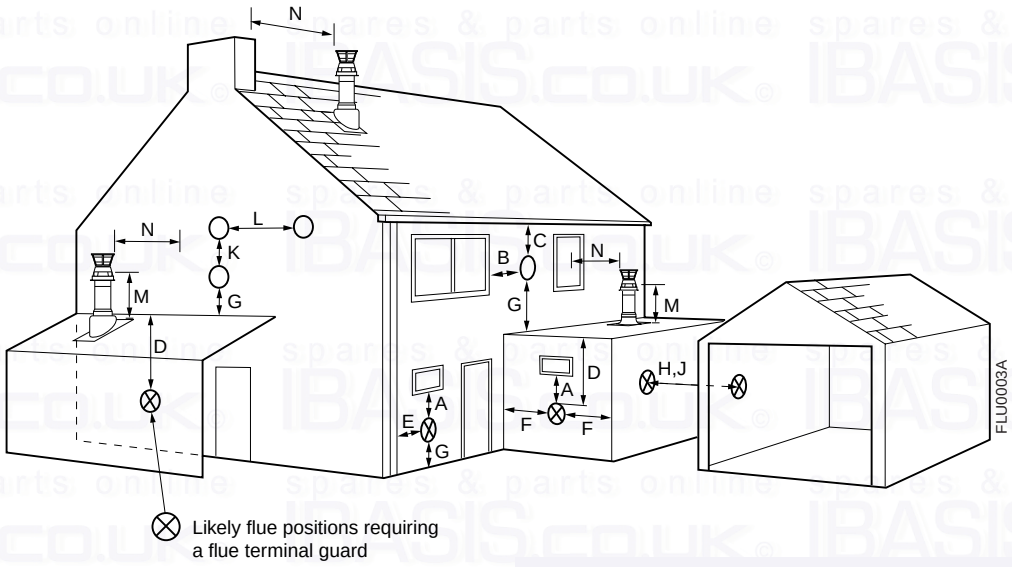

Fig. 13

Where the terminal is within 1 metre of any plastic material, such material should be protected from the effects of combustion products.

There are additional general requirements in most Regulations and Standards that the flue must be positioned so that it does not cause a nuisance and permits the dispersal of combustion products.

If the terminal is less than 2 metres above ground level, balcony or place to which any person has access, the terminal must be protected by a guard, (Flue Guard Part No. 26000045).

Table 3

Terminal Position with Minimum Distance (mm)		
A	Directly below an opening, air brick, opening window etc	600
B	Horizontally to an opening, air brick, opening window etc	600
C	Below a plastic/painted gutter, drainage pipe or eaves, with protection	75
D	Below a balcony or a plastic/painted gutter, drainage pipe or eaves	600
E	From vertical sanitary pipework	300
F	From an internal or external corner	300
G	Above ground or balcony level	300
H	From a surface facing a terminal	600
J	From a terminal facing the terminal	1200
K	Vertically from a terminal on the same wall	1500
L	Horizontally from a terminal on the same wall	750
M	From the intersection with the roof to the air intake on the terminal	300
N	From the terminal to a wall or chimney	1000

Note: The distance from a appliance terminal installed parallel to a boundary may not be less than 300 mm in accordance with the diagram below.

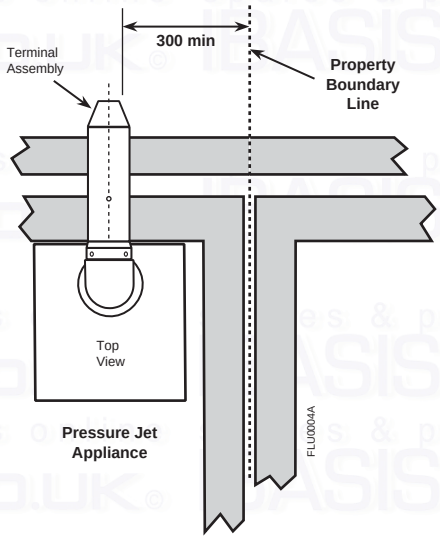

Tank Support

Steel tanks are normally supported on masonry piers. These have to maintain the tank at a sufficient height to enable access to be gained for painting.

Requirements for Tank Accommodation

Reference should be made to the relevant building regulations, bye-laws, etc. in order to achieve a satisfactory degree of safety in relation to the methods of protection. Underground tanks are also referred to in BS 5410:Pt.1. BS 5410:Pt.2 gives more detailed guidance on the burying of steel tanks.

The Scottish Building Standard requirements for underground tanks are the same as those of BS 5410:Pt.1.

Methods of Tank Protection

It is considered unlikely that a fire will originate from the stored oil and it is the purpose of these recommendations to ensure that a fire which may originate from a building or other external source is not transmitted to the tank contents.

Adequate safety may be achieved in a number of ways, for example:

a) Protecting the tank by a physical barrier or isolating the tank by sufficient space;

b) Enclosing the tank by non-combustible fire resisting construction; i.e., putting the tank underground.

Oil Storage Tank & Supply Installations

Oil Tank Types

Steel Tanks

Steel tanks should be constructed so as to comply with BS 799:Pt.5:1987. Galvanised steel pipework or valves must never be used for oil storage or supply systems.

Plastic Tanks

Tanks made from plastics material are now available.

Oil should never be stored in translucent plastic containers.

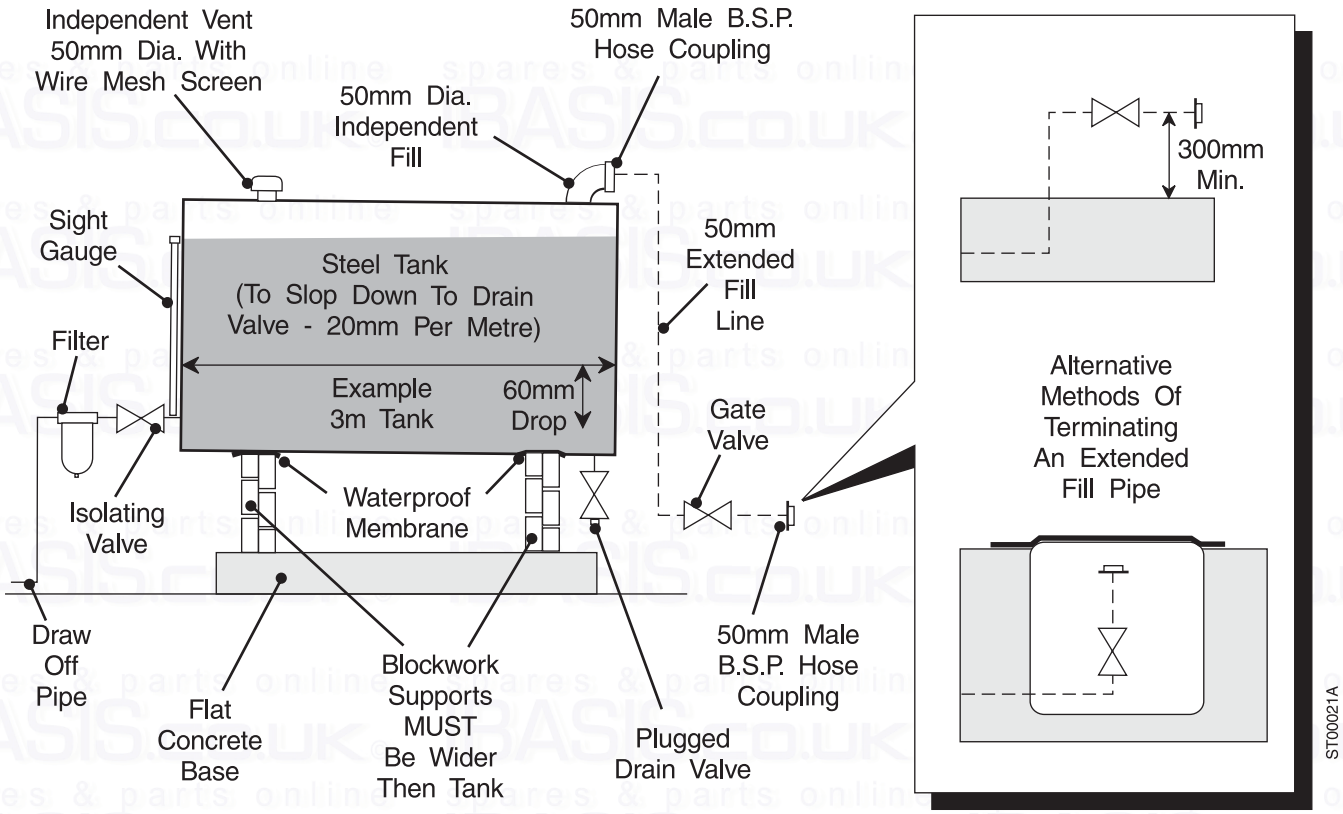

Fig. 14

Storage Requirements and Tank Sizes

Tanks are available in a wide variety of sizes and capacities. For boilers of up to 13 kW (45,000 Btu/h) tanks with a capacity of 1200 litres (250 gallons) are satisfactory. Above that size of boiler a larger capacity tank should be considered.

Some typical tank sizes and capacities are noted below

Length Metres	Width Metres	Height Metres	Capacity Litres
Steel Tanks			
1.52	1.22	0.61	1130
1.83	0.61	1.22	1360
1.83	1.22	1.22	2700
2.44	1.22	1.22	3650
Polythene Tanks			
2.03	0.69	1.36	1150
1.37	1.06	1.25	1250
2.02	1.36	1.36	2500

Tank Fittings

TANKS REQUIRE TO BE PROVIDED WITH THE FOLLOWING FITTINGS:

Fill Pipe

A 50 mm diameter black steel fill pipe terminating with a 50 mm male BSP thread hose coupling connection and non ferrous screw cap and chain.

Extended Fill Pipe

Extended fill pipes can be used when the location of the tank is such that access for filling would be difficult for a delivery tanker carrying 30 metres of hose. Extended fill lines must be run in 50 mm diameter black steel tube with proper support. They must be arranged so as to be self draining, preferably in to the tank. Where tanks are located lower than their filling connection care must be taken to ensure that the pressure head of oil applied during filling is not excessive.
Where the use of an extended fill pipe means that the delivery driver cannot see the oil tank, an audible alarm should be fitted to indicate that the tank is nearly full.

Vent Pipe

A separate vent pipe with an internal diameter at least equal to that of the fill pipe must be fitted. The open end of the vent is fitted with a return bend and an open wire mesh balloon.

A mushroom type vent may be fitted provided its free area is at least equal to the cross sectional area of the fill pipe. The vent should normally rise no higher than 600 mm above the top of the tank.

If the vent pipe rises more than 600 mm above the tank a pressure relief outlet must be provided in the vent at the 600 mm level. This is normally a horizontal branch off the vent with a flap at its end. This is hinged at the top and fitted so that it is normally closed but will open easily if oil rises up to the level of the branch.

Isolating Valve

A valve is fitted in the tank outlet in an accessible position so that the oil supply to the burner can be shut off if required.

The valve must be of a type suitable for use with oil. The outlet from the tank must be above the level of the bottom of the tank to prevent water and sediment being drawn in to the oil supply pipe.

Drain Valve

In order to enable the sediment and water to be removed from the tank a gate valve and plug are fitted in the bottom plate of the tank.

Contents Gauge

The most commonly used gauge is the sight tube type. These are simple and have some advantages for domestic use. An isolating valve must always be provided and is often incorporated in the gauge connection. The top of the gauge must be fixed to the top of the tank and provided with a cap to protect the oil from foreign matter. Integral gauges using internal floats are also available. These are less likely than sight gauges to give rise to leaks.

Overfill Alarms

Audible alarms can be fitted in tanks to indicate that they are nearly full. These are an essential requirement when the delivery point and tanker access are remote from each other.

Oil Supply Pipe Layout

Oil can be run from the storage tank to the burner by a single pipe gravity flow if there is a sufficient height difference between the bottom of the tank and the burner. Otherwise a two pipe system is needed.

a) Single Pipe Supply Systems - Tanks serving

appliances with pressure jet burners by means of a single pipe need to be positioned so that they will apply the 300 mm minimum required head of oil to the burner when the fuel level is at its lowest point. The fittings and layout are shown in Fig. 16.

Figures for Kerosine Only

Pipe Dia I/D in mm.	8	10
'A' Metres	Length in Metres	
0.5	10	20
1.0	20	40
1.5	40	80
2.0	60	100

Table 4

b) Two Pipe Supply Systems - If the tank base is below the level at which gravity feed to the burner can be maintained, a two pipe oil supply system can be adopted. The fittings and layout are shown in Fig. 17. The non return valve in the supply line of the two pipe system is required to prevent oil running back from the burner and un-priming the oil pump. The non return valve in the return line is only required if the top of the tank is above the burner. Its purpose is to prevent oil running back through the burner during maintenance.

Figures for Kerosine Only

Pipe Dia I/D in mm.	8	10
'B' Metres	Length in Metres	
0.0	100	100
0.5	100	100
1.0	100	100
1.5	100	100
2.0	100	100
2.5	80	100
3.0	55	100
3.5	5	90

Table 5

Oil Line De-Aerating Devices

These may be used in conjunction with Statesman boilers. It is recommended that they are fitted outside the dwelling. It is not permissible to fit plastic components in fuel lines within dwellings or boiler rooms. The manufacturers instructions should always be followed, particularly when the oil tank may be situated at low level. The fittings and layout are shown in Fig. 16.

Oil Filter

An oil filter should always be fitted in the oil supply line. Facilities should be provided to enable it to be serviced without draining down the oil supply system.

Fire Valves

A fire valve is an essential part of the oil supply system. It should be capable of cutting off the flow of oil outside the building in the event of a fire starting up within the boiler.

The valve should be located just outside the building at the point where the oil supply line enters. It must be activated by a remote sensor located over the burner but in a position clear of any direct radiation or excessive heat. Weight operated valves connected to a sensor by wires and pulleys have been used for this purpose. It is preferable, however, to use a valve with a capillary connection between its sensor and the oil cut off mechanism. The use of fusible head isolating valves is not recommended.

It is essential that these devices conform to current Standards and Regulations. When they are installed, their manufacturers recommendations must be adhered to.

Copper Tube and Fittings

Copper tube for oil lines should be to BS.2871:Part 1: Table Y. It can be obtained in coil form or half hard for use with bending machines. This pipe can be obtained with protective plastic sheathing applied. Copper tubes for oil lines must not be soldered.
Note: Galvanised pipes must not be used.

Fittings for copper pipe should be of the flared manipulative type to BS.864:Part 2:1983. Steel pipe should be to BS.1387:1985. Fittings for steel pipe should be to BS.1740:Part 1:197271 with taper threads.

Floor Temperatures

The thermal insulation provided in the boiler base ensures the floor temperatures is kept below 80 °C and as such, a non combustible hearth is not required. The floor should always be smooth and flat and capable of supporting the installed weight of the boiler, including its water content. If constructed by a material which is softened by oil, it is advisable to install an additional metal tray underneath the boiler for protection against accidental damage.

The Heating System

When fitting into an existing installation, the system should be chemically cleaned (if practical) before installing the boiler. A suitable inhibitor should be added to keep it in good condition.

System Requirements: These boilers are specifically designed for **Sealed Systems** but will operate on open vented systems. When used on a sealed system the central heating system should be in accordance with the relevant recommendations given in BS 5449 Pt 1 and BS 7074 Pt 1.

The appliances incorporate a circulating pump, no other pump is required. The appliances will operate satisfactory on a two pipe small bore or micro bore system using thermostatically controlled radiator valves. When employing a central heating system where primary water flow may be prevented during a pump overrun situation (i.e. by using thermostatic radiator valves on all radiators), a bypass valve should be fitted between flow and return pipes.

It is strongly recommended that isolating valves are fitted to the central heating flow and return pipes, this will allow the boiler and heatstore tank (Flowsure +) to be drained for service work without having to drain down the whole central heating circuit.

On the Flowsure and Flowsure + a drain point should be provided in the domestic hot water pipework at any point below the height of the domestic hot water heat exchanger. Provision should also be made to allow air to be vented from the domestic hot water pipework at any high points.

Sealed Primary System

A manual reset overheat thermostat is located on the underside of the electrical control panel and is accessible by removing the boiler front casing panel. If a boiler overheat condition arises the burner will remain inoperative until the thermostat button is reset. See the Users Instructions.

The pressure relief valve operates at 3 bar (45 lb/in²). Install a pressure relief valve discharge pipe, not less than 15 mm diameter and connect to the pressure relief outlet connection using a 15 mm compression fitting. The pipe run should be as short as possible, run continuously downwards and discharge to the outside of the building, where possible over a drain. The discharge point must be such that it will not be hazardous to occupants or cause damage to external electrical components or wiring.

Note: It must not discharge above an entrance, or window, or any type of public access. The installer must consider that the overflow could discharge boiling water. See Fig. 15.

The combined temperature /pressure gauge indicates the system pressure, which must be maintained, and the primary water temperature in the boiler shell.

The 10 litre expansion vessel is charged to 0.5 bar and is suitable for a static head of 5 metres (16.5 ft), i.e. the vertical distance between expansion vessel and highest point of system, usually the top of bedroom radiators. If the static head is greater than 5 metres, then the air charge in the vessel must be increased to equal this greater higher static pressure. The pressure can be

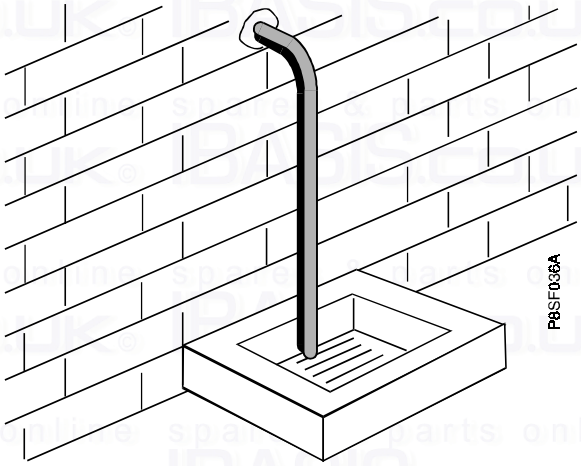

Fig. 15

increased by simply pumping up the vessel with a standard type pump and checking the pressure with a tyre gauge. A schraider type valve is provided on the vessel for this purpose. **The air charge should not exceed a pressure of 1.5 bar (22 p.s.i.)**.

With an initial system pressure of 0.5 bar, a system capacity of about 120 litres (26.4 gals), can be accommodated. A check should be made to ensure the system volume comes within this capacity but if it is greater, than an additional expansion vessel will be needed. This should be fitted in ether the flow or return pipes, as close as practicable to the boiler. Refer to BS 7074 Pt 1 for more information.

Note: The values given in Table 6 are the total system volumes. The primary water capacity given in Table 2 should be deducted from the total system volume when calculating the volume for the radiators, pipework etc.

Safety Valve Setting (bar)	3.0		
Initial System Pressure (bar)	0.5	1.0	1.5
Total Water Content of System	VESSEL VOLUME (L)		
litres	litres	litres	litres
25	2.1	2.7	3.9
50	4.2	5.4	7.8
75	6.3	8.2	11.7
100	8.3	10.9	15.6
125	10.4	13.6	19.5
150	12.5	16.3	23.4
175	14.6	19.1	27.3
200	16.7	21.8	31.2
225	18.7	24.5	35.1
250	20.8	27.2	39.0
For system volumes other than those given above, multiply the system volume by the factor across	0.0833	0.109	0.156

Deduct from the value given in the table the 10 litre expansion vessel supplied.

Table 6

The automatic air vent automatically expels any air-released from the water and thereby keeps the boiler fully charged.

Filling and Make-up Loop

A connection must be incorporated into the central heating system to facilitate filling. There must be no direct connection to the mains water supply, even through a non-return valve, without the approval of the Local Water Authority. The filling point must be at low level, water loss must be replaced. The connection should be made in the central heating return as close to the boiler as possible.

Permissible methods of filling

Direct method - A detachable flexible hose is connected to a stop valve fitted to an outlet on the service main. The other end of the hose is connected to a second stop valve and a double check valve. The double check valve is fitted to an inlet connection on the central heating return pipe. The hose should be disconnected after filling. Where the mains pressure is excessive a pressure reducing valve shall be used to make filling easier.

Note: On the Flowsure and Flowsure+, this method is recommended, and the associated components are supplied with the boiler. A pressure reducing valve is not required as the stop valve incorporates a flow restrictor. (restricted to 10 l/m).

Booster pump method - The system may be filled through a self contained unit comprising a cistern, pressure booster pump and if necessary, an automatic pressure-reducing valve or flow restrictor. The pressure booster pump must be capable of pressurising the system to a minimum of 1.0 bar (14 p.s.i.) measured at the appliance. The cistern should be supplied through a temporary connection from a service pipe or cold water distributing pipe. The unit may remain permanently connected to the heating system to provide limited water make-up.

Provision should be made for replacing water loss from the system by re-pressurisation of the system

Domestic Hot Water

Statesman System

The domestic hot water cylinder (where fitted) must be of the indirect coil type and suitable for working at a gauge pressure of 0.35 bar above the safety-valve setting, i.e. 3.65 bar.

Statesman Flowsure and Flowsure+

The final 600 mm of the mains cold water connection to the boiler should be made in copper tubing to BS 2871 Pt 1, which is recommended for water carrying pipework and must be used for pipework carrying potable water. All capillary joints in the D.H.W. pipework must be joined with a lead free solder.

The boiler is suitable for mains cold water supply having a maximum pressure of up to 10 bar (145 lb/in²). A pressure reducing valve must be fitted if the mains pressure exceeds 10 bar.
If there are long pipe runs to the taps or shower. It is suggested that they be insulated to prevent the rapid cooling of residual hot water in the pipes after the tap has been turned off.

Taps and Valves - Hot and cold taps and mixing valves used with these boilers must be suitable for operating at a mains pressure of up to 10 bar (145 lb/in²).

Showers (Fixed head type) - No anti-syphonage arrangements are necessary. Thermostatically controlled shower valves will give extra comfort and guard against flow of water at too a high a temperature.

Showers (Loose or flexible head type) - A loose head shower hose must be fixed so that the head cannot fall closer than 25 mm (1 in) above the top edge of the bath to prevent its immersion in bath water. Alternatively the shower must incorporate or be fitted with an anti-syphonage device at the point of the flexible hose connections.

Bidets - The supply of hot and cold mains water direct to a bidet is permitted (subject to local Water Company requirements) provided that the bidet is of the over-rim flushing type. The outlet(s) should be shrouded and unable to have any temporary hand held spray attached. No anti-syphonage arrangements are necessary.

Use in Hard Water Areas

If the area of installation is recognised as a hard water area, (above 200 p.p.m.) it is essential that a suitable water treatment device of an electronic, magnetic or galvanic type be installed in the mains water supply.

To assess water hardness, immerse the test strip supplied, for about one second in a water sample (NOT IN RUNNING WATER) so as to moisten all the zones. Inspect the strip after 1-2 minutes, check the zones, if two or more zones have changed colour the hardness of the water is above 200 p.p.m. and a water treatment device will be required.

Single Pipe Supply System

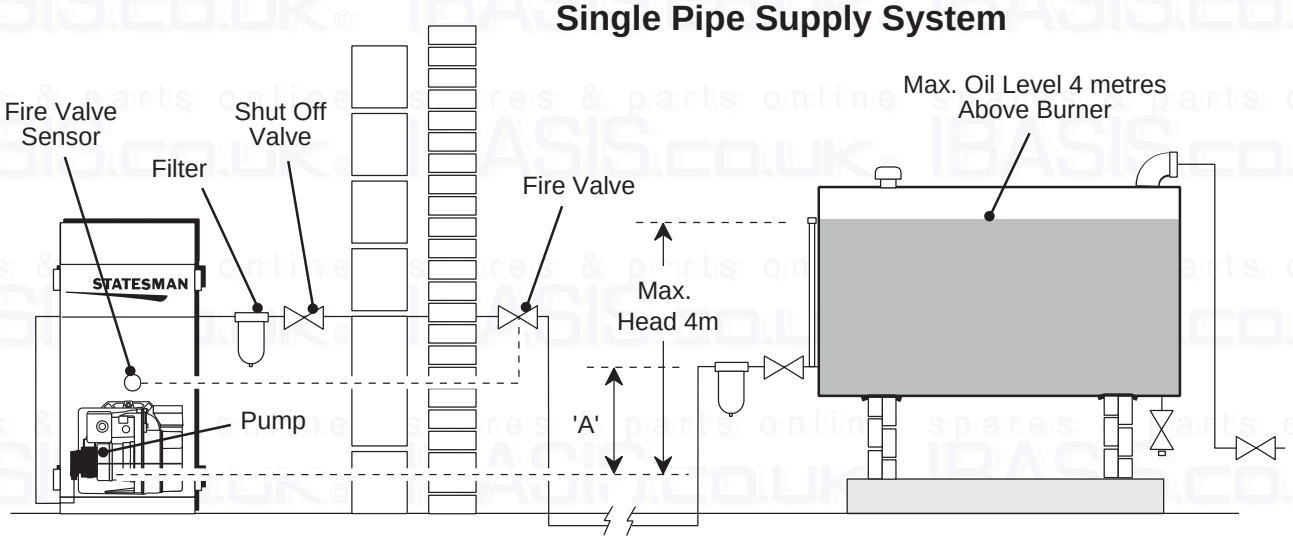

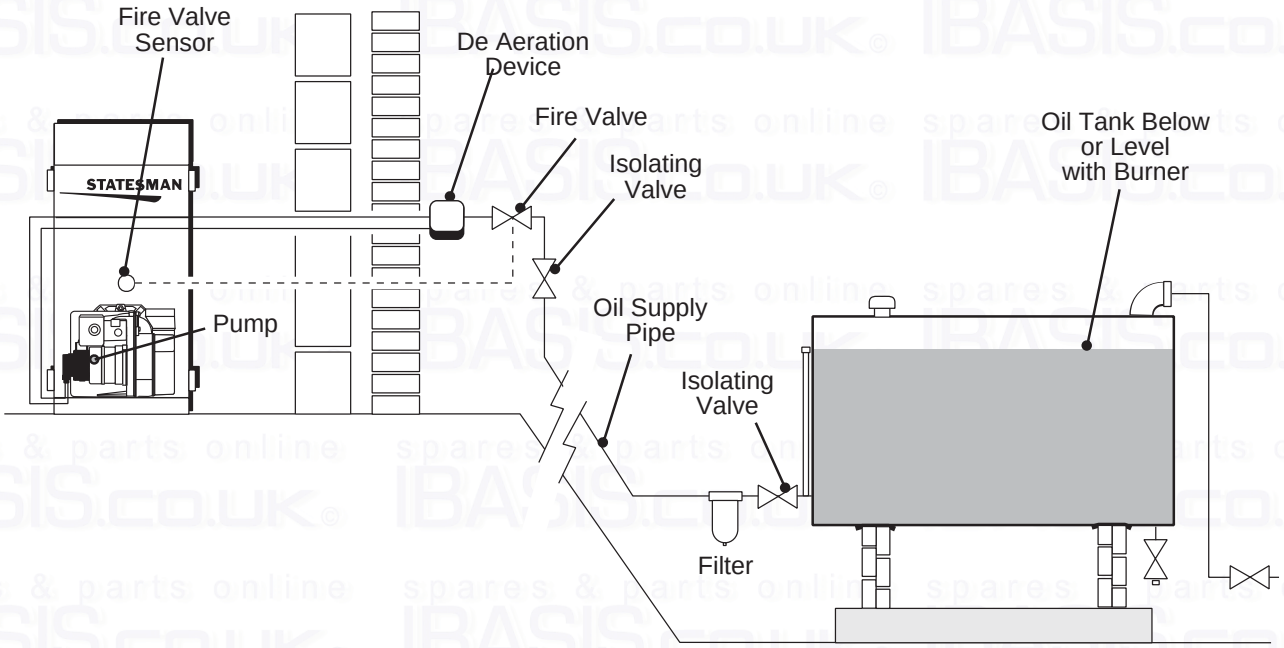

Fig. 16

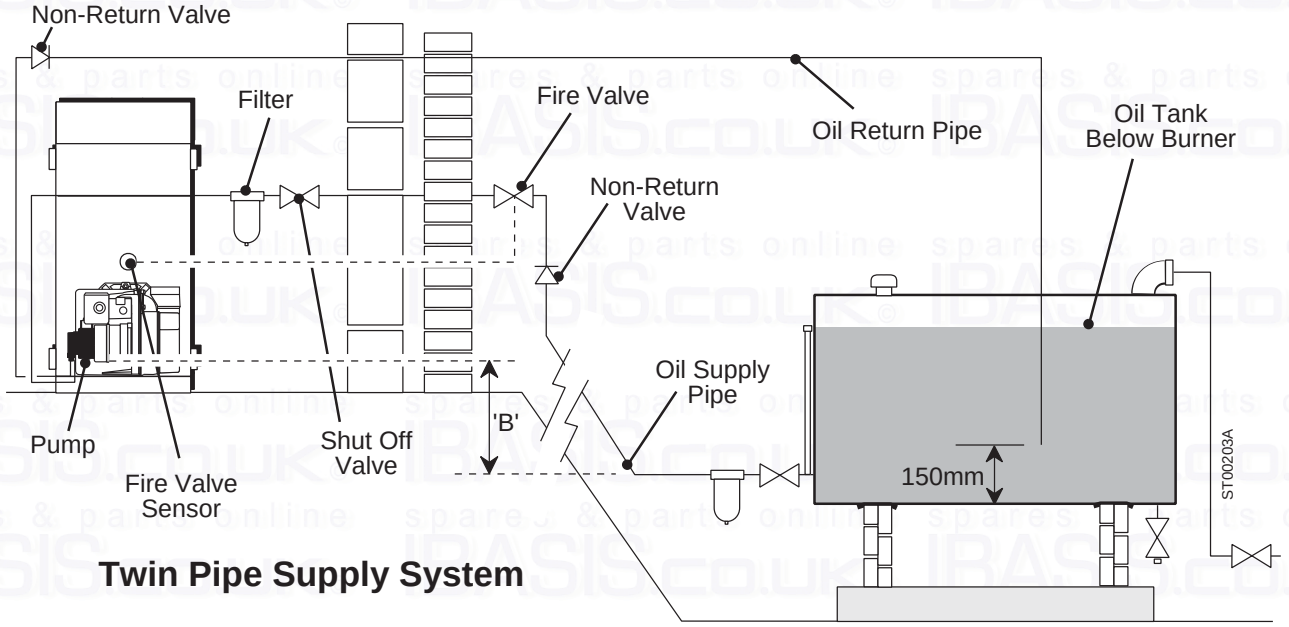

Twin Pipe Supply System

Fig. 17

3 - Installation & Commissioning

Low Level Horizontal - Kits 1 & 2 With Extensions

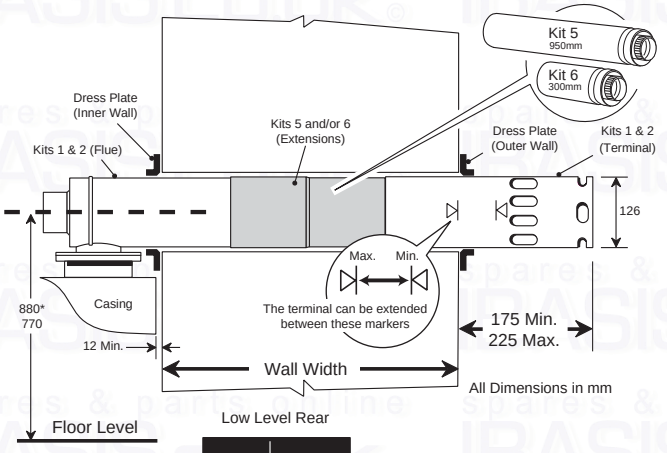

Low Level Rear

Wall Width	Kit Numbers
100 - 275	1
225 - 600	2
600 - 900	2 + 6
900 - 1200	2 + 6 + 6
1200 - 1550	2 + 5
1550 - 1850	2 + 5 + 6

High Level Vertical - Kits 3, 4, 9 & 10

With Extensions

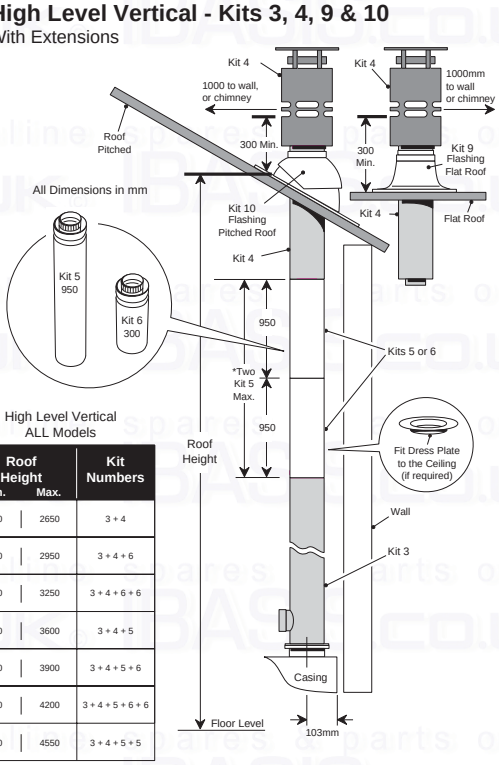

High Level Vertical
ALL Models

Roof Height Min.	Roof Height Max.	Kit Numbers
2150	2650	3 + 4
2450	2950	3 + 4 + 6
2750	3250	3 + 4 + 6 + 6
3100	3600	3 + 4 + 5
3400	3900	3 + 4 + 5 + 6
3700	4200	3 + 4 + 5 + 6 + 6
4050	4550	3 + 4 + 5 + 5

High Level Horizontal - Kits 3, 7 & 8 With Extensions

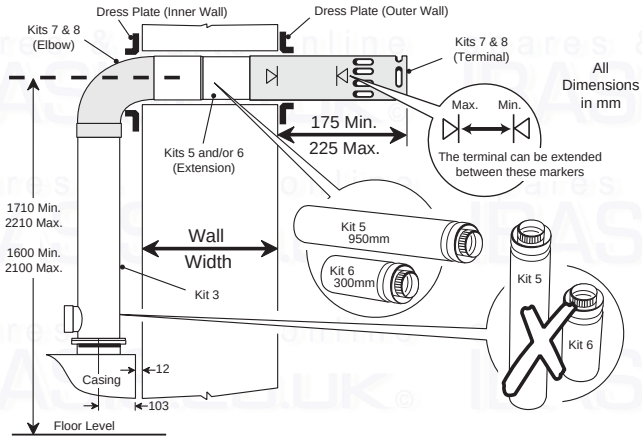

High Level Rear

Wall Width	Kit Numbers
100 - 275	3 + 7
225 - 525	3 + 8
525 - 825	3 + 8 + 6
825 - 1125	3 + 8 + 6 + 6
1125 - 1225	3 + 7 + 5
1225 - 1475	3 + 8 + 5

High Level Left/Right System, Flowsure Flowsure + Left Only

Wall Width	Kit Numbers
100 - 125	3 + 7
100 - 375	3 + 8
375 - 675	3 + 8 + 6
675 - 975	3 + 8 + 6 + 6
975 - 1075	3 + 7 + 5
1075 - 1325	3 + 8 + 5

High Level Right Flowsure + Model

Wall Width	Kit Numbers
Not Suitable	3 + 7
100 - 275	3 + 8
275 - 575	3 + 8 + 6
575 - 875	3 + 8 + 6 + 6
875 - 975	3 + 7 + 5
975 - 1225	3 + 8 + 5

Low Level Horizontal - Kits 7, 8 & 12 With Extensions

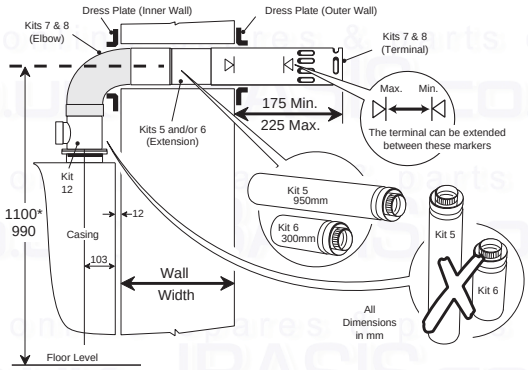

Low Level Rear

Wall Width	Kit Numbers
100 - 275	12 + 7
225 - 525	12 + 8
525 - 825	12 + 8 + 6
825 - 1125	12 + 8 + 6 + 6
1125 - 1225	12 + 7 + 5
1225 - 1475	12 + 8 + 5
1475 - 1775	12 + 8 + 5 + 6

Low Level Left/Right System, Flowsure Flowsure + Left Only

Wall Width	Kit Numbers
100 - 125	12 + 7
100 - 375	12 + 8
375 - 675	12 + 8 + 6
675 - 975	12 + 8 + 6 + 6
975 - 1075	12 + 7 + 5
1075 - 1325	12 + 8 + 5
1325 - 1625	12 + 8 + 5 + 6

Low Level Right Flowsure + Model

Wall Width	Kit Numbers
Not Suitable	12 + 7
100 - 275	12 + 8
275 - 575	12 + 8 + 6
575 - 875	12 + 8 + 6 + 6
875 - 975	12 + 7 + 5
975 - 1225	12 + 8 + 5
1225 - 1525	12 + 8 + 5 + 6

ST00253A

All Table Dimensions ± 5mm

Fig. 18

Installation & Commissioning

It is possible to install the boiler without removing the casing sides but care should be taken not to damage the panels when connecting the water pipes.

Fitting a Balanced Flue

Refer to the Instructions supplied with the flue.

Fitting a Conventional Flue

Local Building Regulations and Bye Laws should be consulted for details of the chimney, use a 135° bend. 90° bends must not be used, due to their flow resistance and baffling characteristics. Ensure that flue pipe entering a brick chimney is cut off flush with the inside surface or at a small inclined angle to prevent droppings entering the flue connection. Provision for cleaning the chimney should be made below the flue entry. Refer also to Section 2 of these Instructions.

a) Unpack the boiler.
b) Select the desired oil feed position and remove the appropriate knockout in the base using a suitable drift.
c) Position boiler.
d) Lift off top casing panel.
e) Carefully remove knockout panel in top casing panel using gentle manipulation.
f) Seal flue pipe to boiler with fire cement.
g) Re-fit top casing panel.

Connecting the Electricity Supply

Electrical Connections:

All electrical wiring must be carried out by a qualified electrician in accordance with current I.E.E. Regulations and any Local Regulations that may apply.

Earthing: It is essential that the appliance is earthed.

Cable Entry: The cable should be heat resisting and routed either along the top side of the casing or run from the bottom side through the knock out holes in the base tray, making sure they do not come in contact with the heat exchanger.

Fusing: The mains electrical supply should be taken from a double pole isolating switch (fused 5 amp) situated near the boiler.

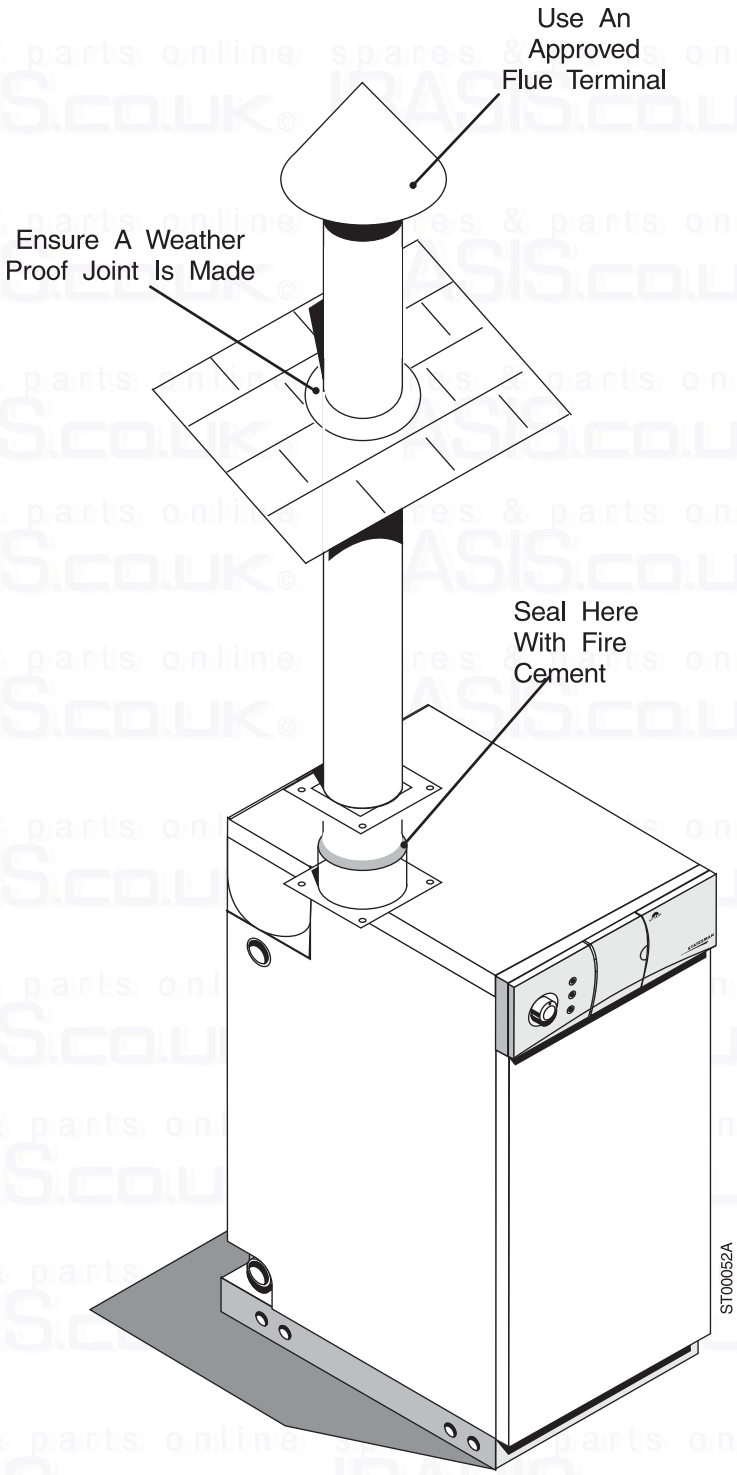

Fig. 19

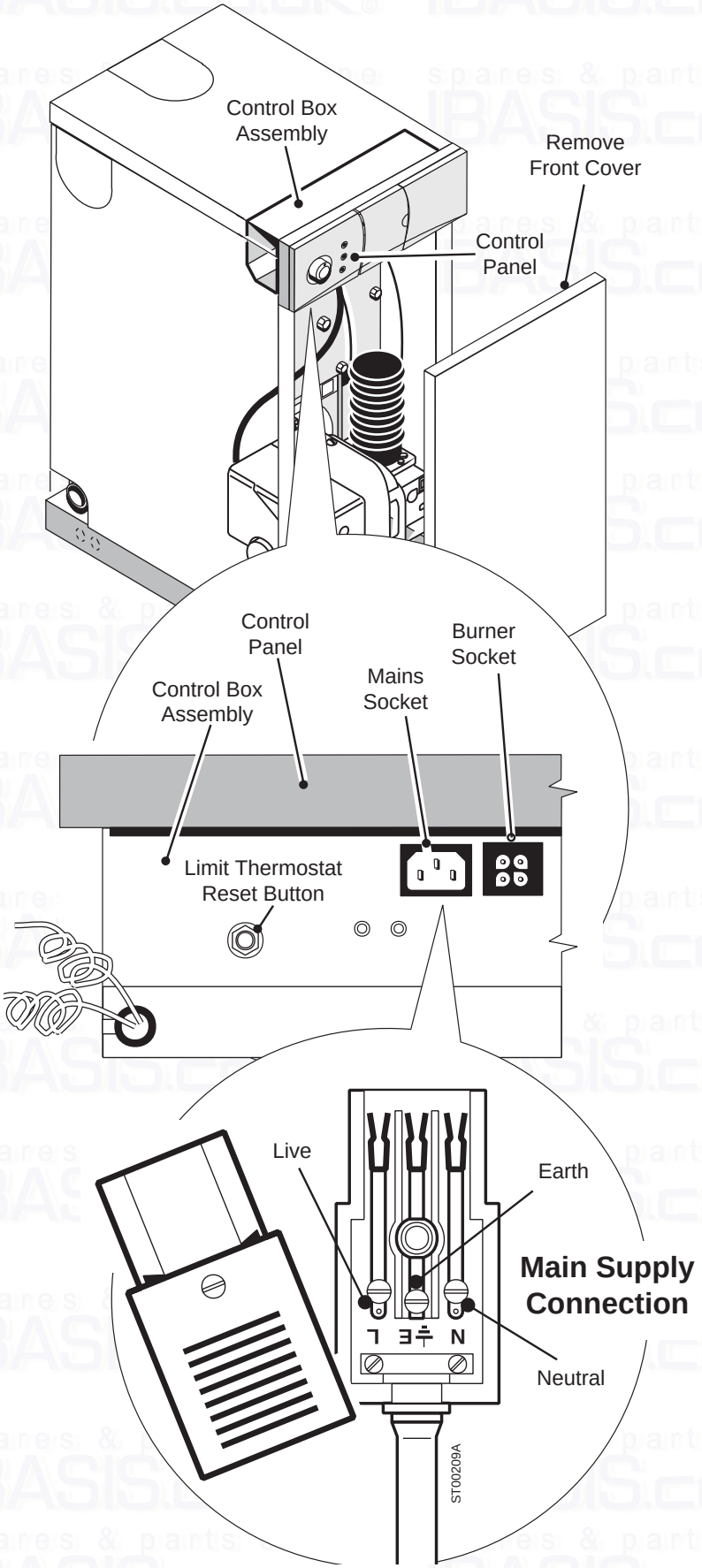

Fig. 20

Wiring Diagrams: Refer to wiring diagrams in Section 1 of these Instructions. The mains inlet plug is provided in the bag of fittings supplied.

Note: A permanent live supply must be made, to allow the pump overrun device, as fitted to the Flowsure and Flowsure+, to operate correctly.

To wire in external controls, open the door on the right hand side of the facia panel, to expose a blanking plate (Statesman System) or programmer plate (Flowsure, Flowsure+).

Statesman System: Remove the blanking plate you will then see a plug-in terminal block, remove the appropriate part, run wires through hole in panel, wire into plug refit plug into socket, pull through excess wires then refit blanking plate.

Statesman Flowsure, Flowsure+: Remove the programmer plate you will then see a plug-in terminal block, remove the plug, run wires through hole in panel, wire into plug refit plug into socket, pull through excess wires then refit programmer plate.

Facia Door

A plastic facia door is incorporated into the control panel. This door is designed to come off if any undue pressure is exerted on it when open but can easily be snapped back into place. It may however become detached if the appliance has been handled roughly during transit. If you find the door is missing when opening the carton, check to see if it is amongst the packaging.

Fuel Pipes

Refer to Section 2, Figs. 14, 16, 17 plus Tables 4 and 5.

Before connecting a flexible hose to the burner draw off a small quantity of oil, approximately two pints, into a suitable container, check that fuel is clean.

The flexible fuel pipe should be connected to the burner and the other end to the fuel line via the isolation valve (supplied). At this stage the connection should be left finger-tight as it will have to be disconnected before the burner is started in order to vent air from the line after the fuel has been turned on. Couple a filter to the rigid pipe and run pipework from the inlet of the filter to the tank. The filter should not be installed inside the boiler.

continued on page 34.

Wiring Diagram - External Controls- Statesman System with Typical Zone Valve

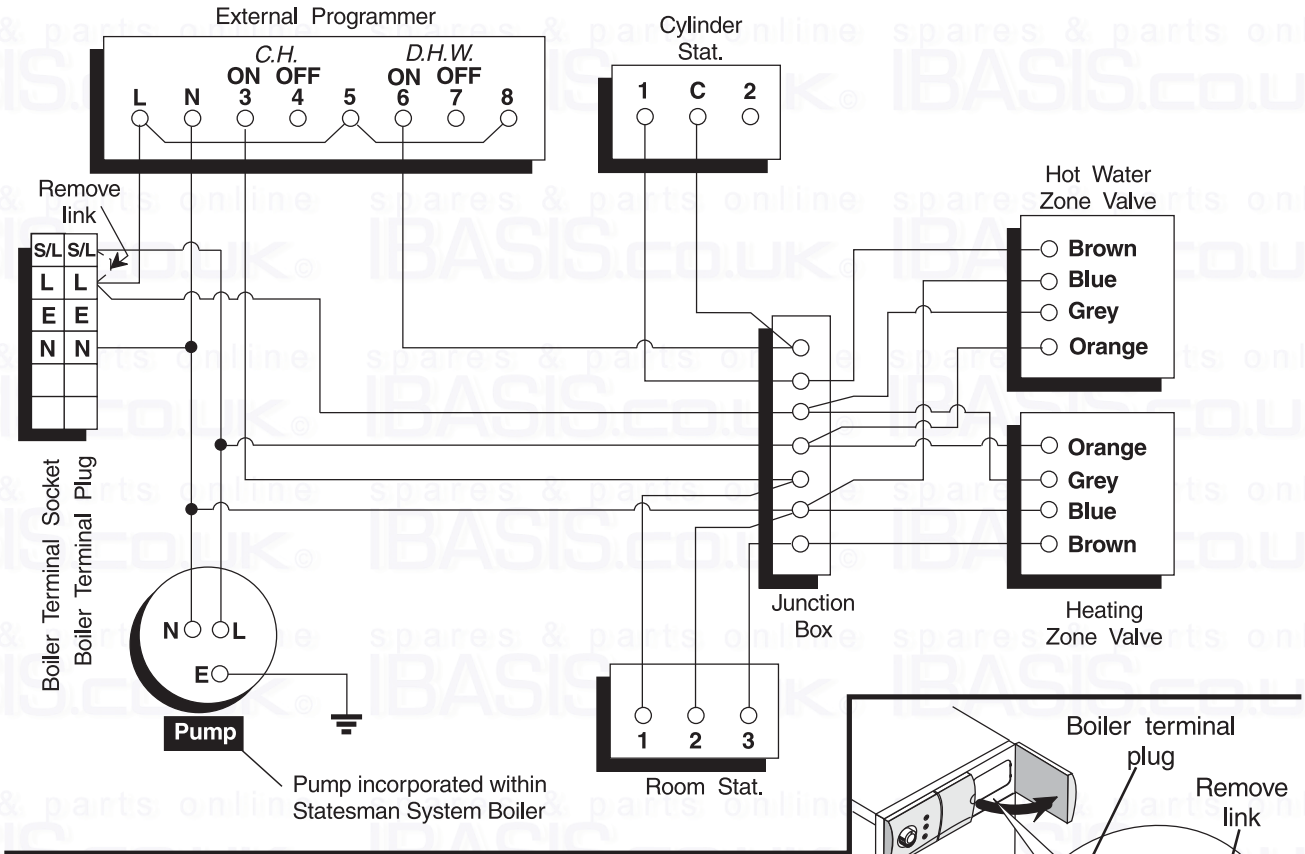

Wiring Diagram - External Controls Statesman System with Typical Mid Position Valve

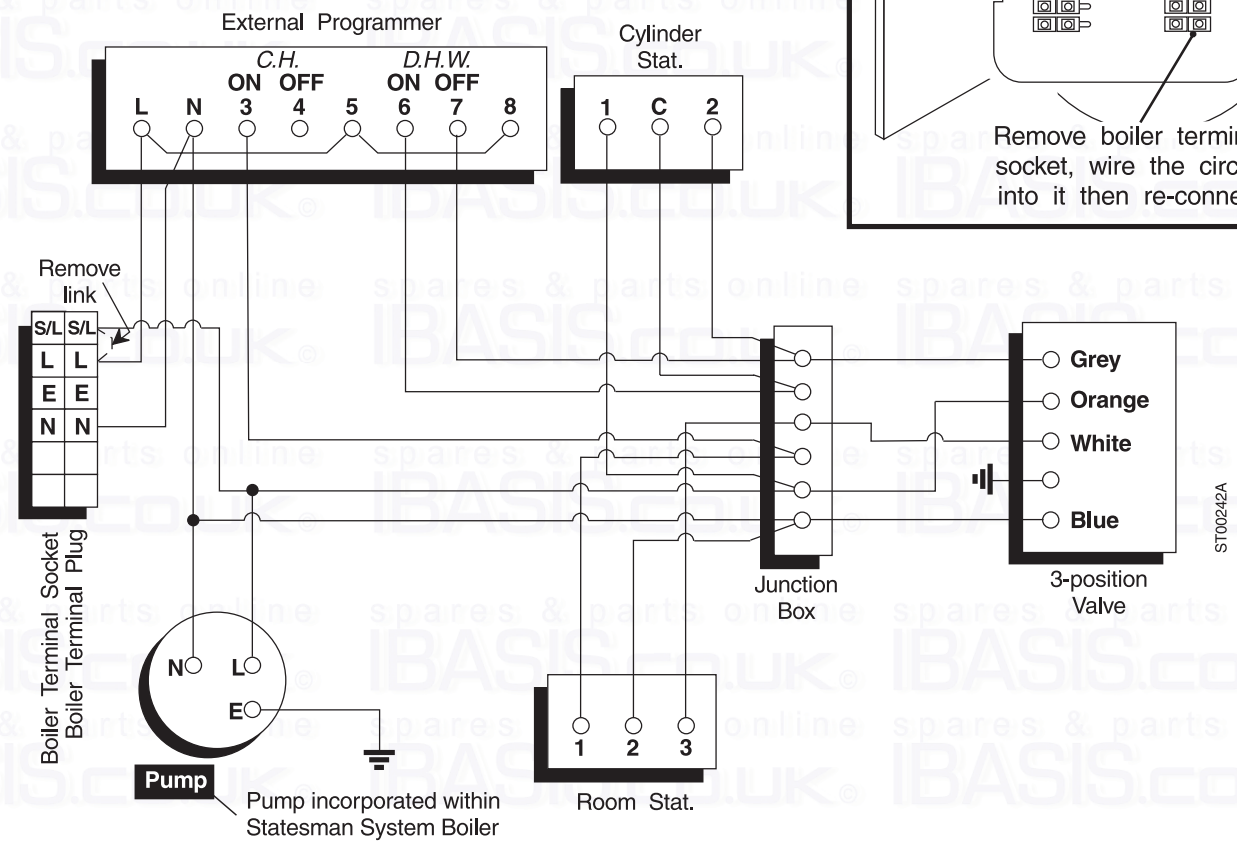

Fig. 21

Wiring Diagram - External Controls
Statesman Flowsure, Flowsure +

Detail With Room Stat/Frost Stat

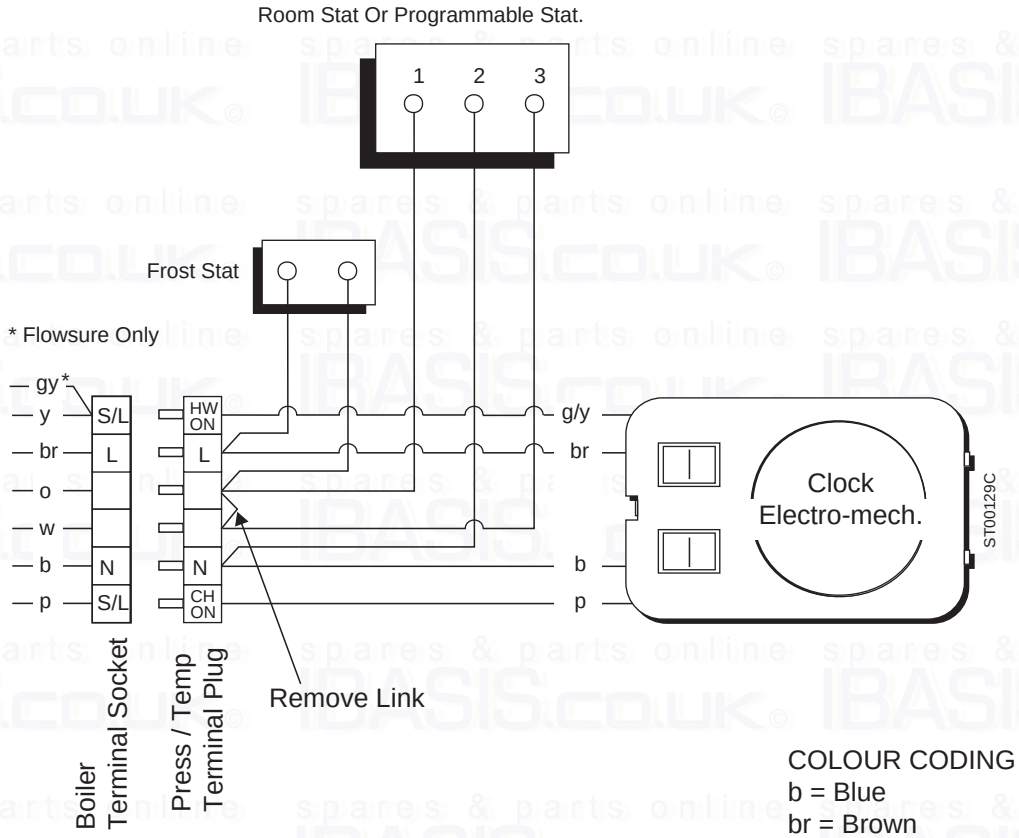

COLOUR CODING
b = Blue
br = Brown
gy = Grey
w = White
y = Yellow
o = Orange
p = Pink
g/y = Green/Yellow

Fig. 22

An Isolation Valve should be placed on the tank side of the filter, so that the oil supply can be isolated when servicing is required.

Ensure that the filter is positioned correctly and that it is easily accessible with sufficient clearance below it for cleaning or replacing the filter element.

It is vital that all joints are completely oil-tight, leaks may cause air locks in the fuel supply pipe, and will almost certainly lead to complaints of oil odour.

Fit the fire valve in the oil line, as detailed in Section 2, Page 26.

Where the tank position provides a gravity flow of oil to the burner, THE SINGLE PIPE SYSTEM should be used. The difference in “head”, i.e., the distance vertically between the pump and the outlet of the tank, dictates the maximum length of oil supply pipe, including horizontal and vertical runs (see Section 2).

When the tank outlet is below the level of the burner fuel pump, THE TWO PIPE SYSTEM MUST BE USED (See Fig. 17). Here a return line is piped from the pump back to the tank, finishing at least 150 mm above the bottom. This section of pipe must end at the same level in the tank as the suction as to prevent loss of prime.

The ends of the two pipes should be well separated so that no sludge is disturbed by the return, and will not be pulled into the suction pipe. An elbow at the end of the return will ensure that the discharge is away from the suction. A non-return valve should be fitted as close as possible to the tank and at the lowest available point in the suction line. Avoid having the bottom of the tank more than 3 m (10') below the burner. The difference in levels between the pump and the suction and the return lines in the tank controls the maximum length of pipe, including horizontal and vertical runs.

It is necessary to enable the pump to raise the oil out of the tank. Problems can be encountered, with air collecting on shut down, if the fuel pump is situated at the highest point in the system.

Water Connections

Statesman System and Flowsure:
Return connections are provided on each side of the boiler at low level. A flow connection is provided at high level at the top rear of the boiler. Connect the pipework to the selected connections and blank off the unused ones.

Statesman Flowsure+:
A flow connection is provided at high level at the top rear of the boiler and one return connection is provided at low level to the left side of the boiler.

Note: If the pipes are to be reduced down from 22 mm, eccentric adaptors should be used to prevent air being trapped in the boiler, see Fig. 23.

On the Flowsure and Flowsure+, domestic hot and cold water connections are provided at the top rear of the boiler.

Filling and Make-Up Loop

On the Flowsure and Flowsure+ the flexible hose provides the means for initial filling of the system from the mains supply and also for subsequent make-up. It is fitted with a double check valve to ensure system water cannot feed back whilst filling and a shut-off valve is provided for mains isolation. IT IS IMPORTANT THAT FILLING IS DONE SLOWLY AND THE HOSE IS DISCONNECTED WHEN NOT IN USE.

On the System boiler a filling and make-up loop will need to be provided.

Retarders

There is an access door above the burner,(behind the expansion vessel), remove and check the retarders are sound and in position.

Commission the boiler - See page 33.

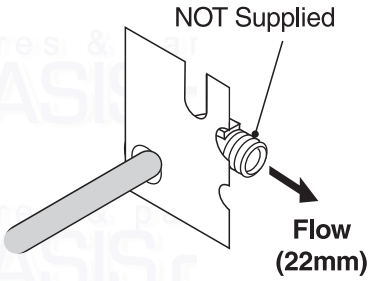

Top connection:
System

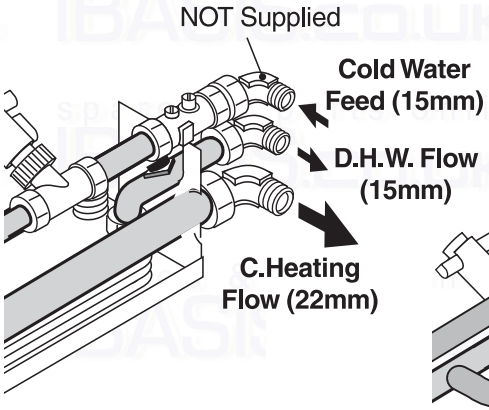

Top connections:
Flowsure

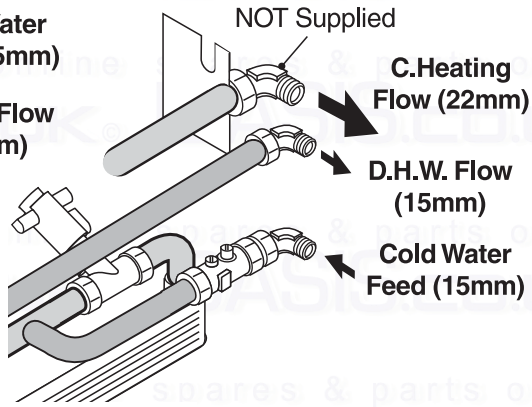

Top connections:
Flowsure +

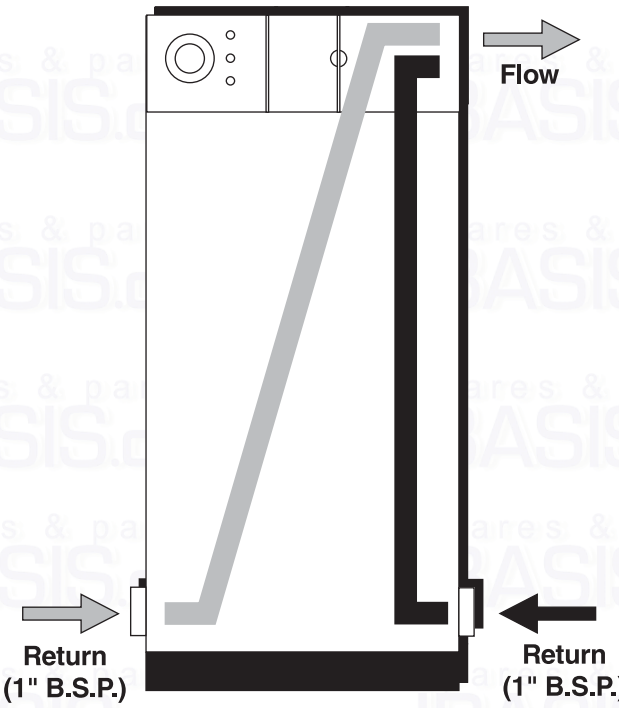

Bottom connections:
System & Flowsure

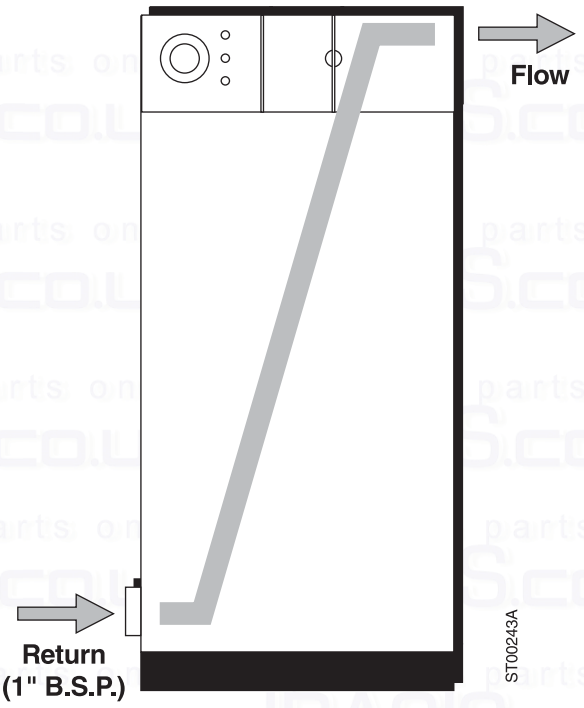

Bottom connection:
Flowsure +

Fig. 23

Commissioning

It is strongly recommended that the boiler/burner is commissioned by a qualified technician, preferably OFTEC trained and registered.

Burner

1. Unless already removed, remove the top casing panel, front casing panel and burner cover.
2. Temporally disconnect the fuel hose from the burner, run off the oil into a container to purge air from the fuel line.
3. Re-connect oil line and check for leaks.
4. Connect a pressure gauge to the oil pump.
5. Check that the water system is filled and vented.
6. Check that all controls are calling for heat.
7. Switch on electricity supply.
8. Turn on boiler thermostat. The burner will start and should light within 20 seconds. If the flame is not established during this time the burner lock out neon will light, wait about a minute before pressing the reset button to re-commence the lighting sequence. Continuous failure to light is almost certainly due to air remaining in the fuel supply.
9. Start and stop the burner two or three times until the flame cuts off sharply - this indicates any remaining air has been dispersed.
10. When the burner is operating check the fuel supply pressure, adjust if necessary to give the required output.
11. Switch off the boiler, remove the pressure gauge and re-fit the plug.
12. Re-fit the burner cover and boiler casing panels,
13. Switch the boiler on. Allow the burner to run for about 15 minutes. The flue gas sampling point should be used whilst adjusting the air to give clean combustion. See the Burner Information Instructions for correct CO2 reading.

Boiler and system preparation

1. Remove the boiler top and front casing panels.
2. Check that all controls are not calling for heat.
3. Check that all water connections throughout the system are tight.

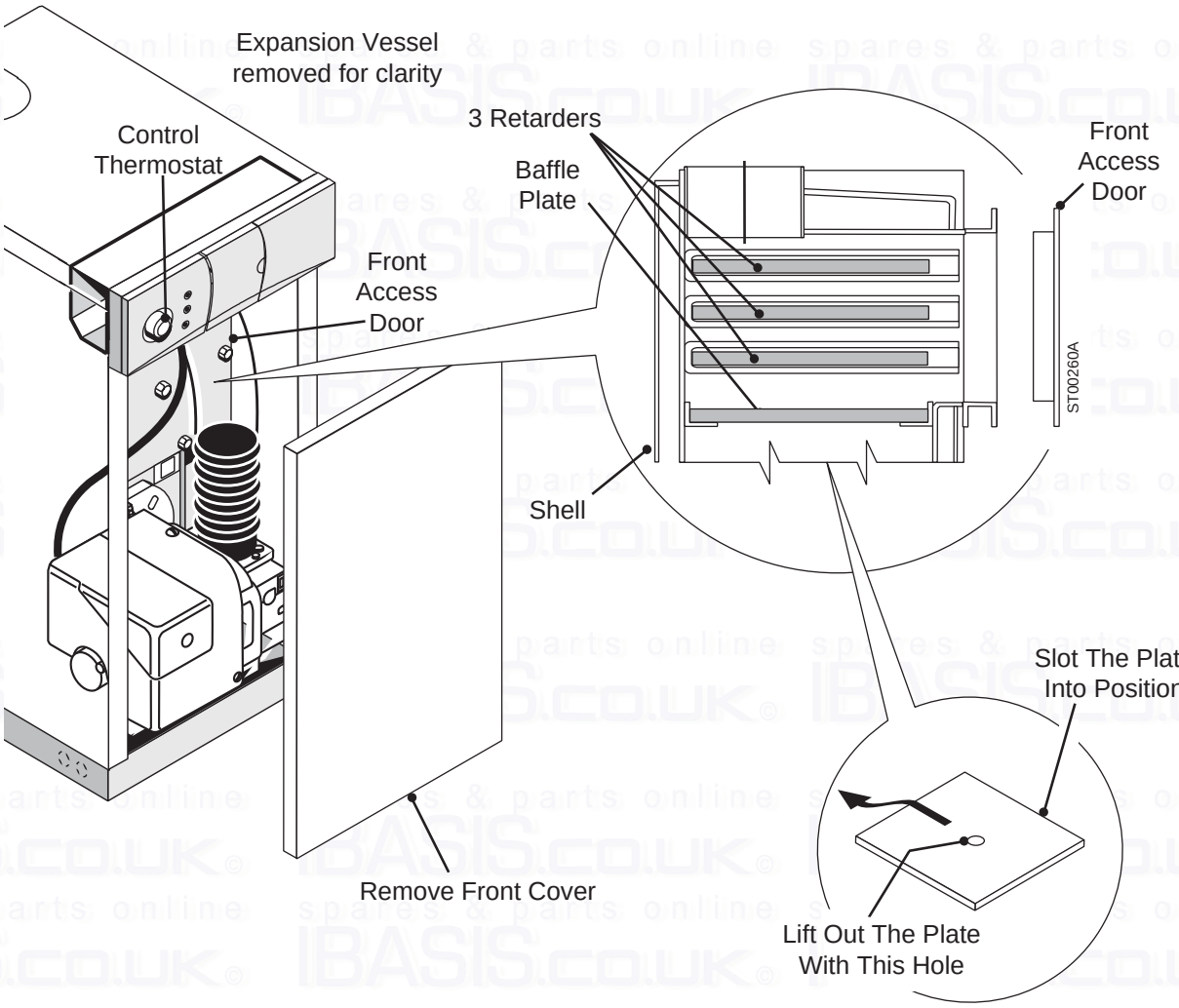

Fig. 24

4. Having completed the necessary water connections, those connections not utilised should be plugged.
5. Check that the central heating system has been fully flushed out at installation using a flushing agent. If not, add a suitable flushing agent to the system and fill the system. Then drain the system while hot and immediately refill adding a suitable proprietary corrosion inhibitor (such as Fernox).

The following procedures should be used when filling the sealed system boilers.

6. Set the diverter valve to the mid position by moving the manual lever to the left hand side and locking in position (Flowsure/Flowsure+). Open all radiators and lockshield valves and remove and discard the automatic air vent cap.
7. Fill the system and check that air is being discharged from the automatic air vent.
8. Vent each radiator in turn to remove the air from the system.
9. Bleed any air from the boiler pipework using the manual air vents provided (Flowsure/Flowsure+).
10. Disconnect the burner at the control box by pressing the connecting plug locking tab and pulling the plug free.
11. When the system has been completely vented, set the controls to call for heat. The pump will now operate and any remaining air can be purged from the system using the appropriate bleed points.
12. Set all controls to stand-by and reconnect burner electrical plug to control box.
13. Return the diverter valve lever to the normal right hand position (Flowsure/Flowsure+).

Set the Expansion Vessel Pressure

The charge pressure of the expansion vessel as dispatched is 0.5 bar, which is equivalent to a static head of 5 metres (16.5 ft). The charge pressure must not be less than the static head at the point of connection. A schraider type valve is fitted to the expansion vessel to allow the charge pressure to be increased if necessary.

Set the System Pressure

Fill the system until the pressure gauge shows 1.5 bar (21.5 lb/in²) and check for water soundness. Release water from the system until the system design pressure is obtained, up to a maximum of 1.5 bar.

System design pressure in bar = static head of the system in bar + 0.3

Note: 1 bar is equivalent to 10.2 metres (33.5 ft) of water. Set the movable pointer giving a permanent record of the set system pressure when cold.

If the pressure indicated on the pressure gauge is greater than 2.5 bar when operating at the maximum central heating temperature, an extra expansion vessel must be fitted to the system as close as possible to the boiler central heating return connection.
Any extra vessel fitted must be pressurised to the same figure as the integral vessel.

Domestic Hot Water System (Flowsure/Flowsure+)

1. Check that the mains water supply has been fully flushed out at installation. If not, disconnect the cold water inlet pipe from the boiler and flush the cold supply thoroughly
2. Set the boiler to hot water mode.
3. Fully open the hot water tap.
4. With a suitable water measuring container, check the water flow rate, see Table 1 (page 13).
5. The flow rate can be manually adjusted at the mains cold water inlet isolating valve if the flow rates as indicated in Table 1 cannot be achieved.
6. Set the mixer valve for optimum hot water temperature, See the Users Instructions for adjustment (Flowsure+only).
7. Fully close the hot water tap.

Note: Max flow rate for Flowsure, 13 ± 1.5 litres/minute and Flowsure+, 17.5 ± 1.5 litres/minute.

Completion of Commissioning

If the boiler is being passed over to the user immediately, advise the user of the precautions necessary to prevent damage to the system and to the building in the event of the system remaining inoperative during frost conditions. Advise the user that for continued efficient and safe operation of the boiler, it is important that adequate servicing is carried out by a qualified engineer at least once a year for boilers using kerosene and twice a year if using gas oil. Set the system controls to the user's requirements.

If the boiler is to be left inoperative, set all controls off. Turn off oil supply at the isolating valve and switch off the electricity supply. If there is any possibility of the boiler and system being left inoperative during frosty conditions then drain the boiler and system.

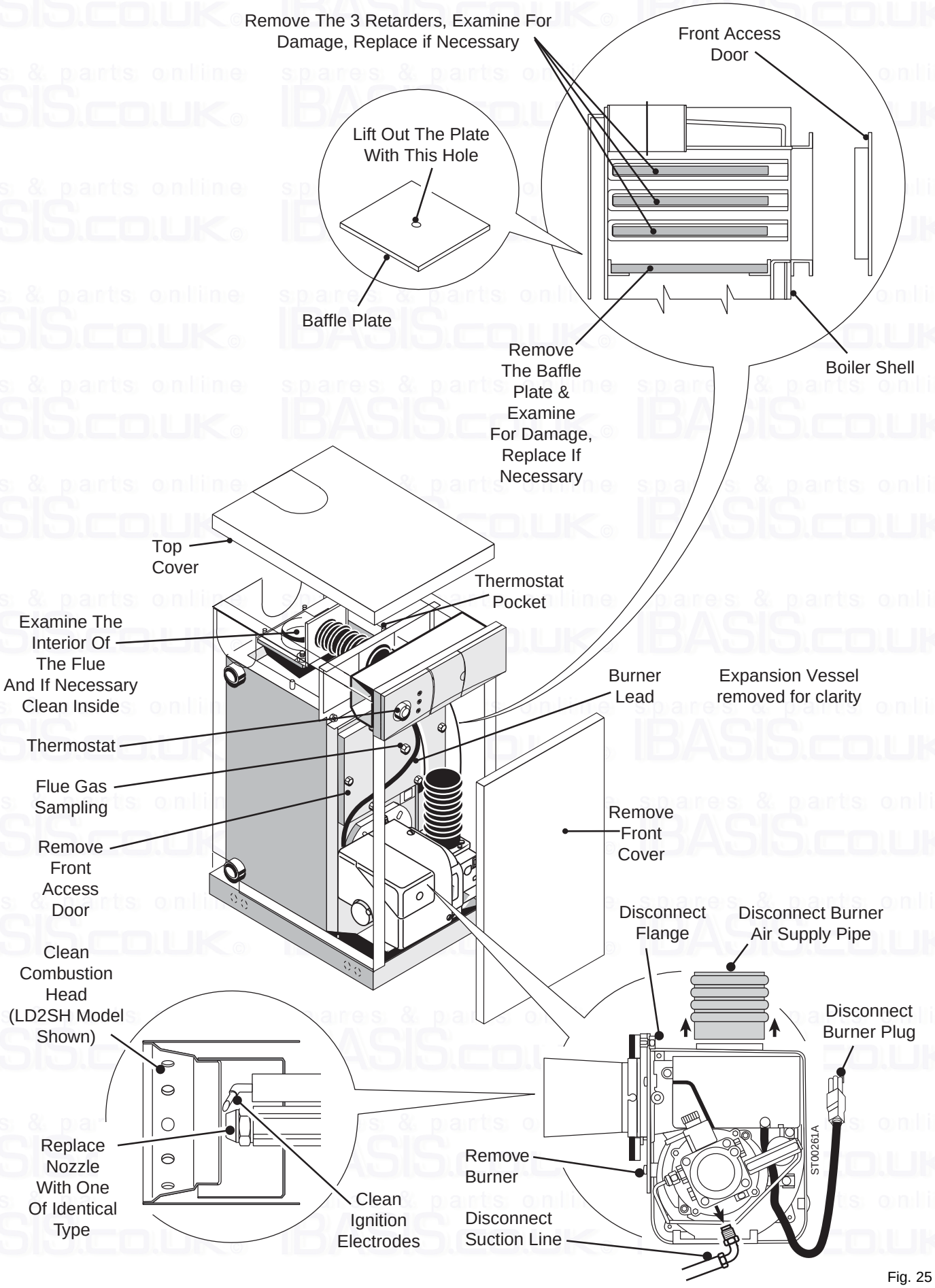
Remove The 3 Retarders, Examine For Damage, Replace if Necessary
Front Access Door
Lift Out The Plate With This Hole
Baffle Plate
Remove The Baffle Plate & Examine For Damage, Replace If Necessary
Boiler Shell
Top Cover
Thermostat Pocket
Examine The Interior Of The Flue And If Necessary Clean Inside
Burner Lead
Expansion Vessel removed for clarity
Thermostat
Flue Gas Sampling
Remove Front Cover
Remove Front Access Door
Disconnect Flange
Disconnect Burner Air Supply Pipe
Clean Combustion Head (LD2SH Model Shown)
Disconnect Burner Plug
Replace Nozzle With One Of Identical Type
Remove Burner
Clean Ignition Electrodes
Disconnect Suction Line
ST00261A

Fig. 25

4 - Servicing & Maintenance

- If the balanced flue is dismantled for any reason and the flue seals disturbed, new seals must be fitted. Refer to the Parts Catalogue for part numbers.

Servicing

- To maintain the boiler's high thermal efficiency and reliable operation, it should be serviced annually by a qualified engineer preferably OFTEC trained and registered. If Gas Oil is the fuel two visits per year are advised.
- Operate the boiler and system. Note any faults which may need to be corrected during the service. It is advised that a set of combustion results are first obtained before undertaking any work.
- Switch off the electricity supply at the main isolating switch to the boiler. Turn off the fuel supply.
- Pull off front cover and disconnect the burner oil pipe(s), flexible air tube and burner plug, refer to the Burner Information Instructions.
- Remove expansion vessel assembly and lay to one side.
- Undo burner retaining nut and withdraw burner from boiler, remove combustion head. Clean combustion head, making sure all slots and holes are clean. Clean ignition electrodes, examine for signs of damage.
- **Remove nozzle and replace with one of identical type. Under no circumstances should the nozzle be stripped into component parts and never attempt to clean the nozzle tip.**
- Remove burner cover, pull out and clean photocell.
- Remove air intake assembly and right hand side of fan casing and check impeller for deposits - clean blades as necessary.
- Remove end cap from oil pump and take out filter. Wash clean with kerosene and replace. (Caution - the oil pump contains a small amount of fuel, which will be released, when the end cap is removed).
- Re-assemble burner and check dimensions, refer to Burner Information Instructions. **Note:** Check all seals and replace if damaged.
- Remove access door on front of boiler, remove retarders and baffle plate noting their positions. Brush off all deposits, if they show signs of damage replace.
- Examine interior of boiler and if necessary clean. Remove any loose debris from the combustion chamber.
- Check the condition of the refractory base and repair any minor cracks with fire cement.
- When satisfied refit retarders and baffle plate and refit access door making sure that seals and gaskets are correctly fitted.
- Refit burner to boiler, connect flexible air tube, oil pipe(s) and refit burner lead.
- With all controls calling for heat, turn on fuel and switch on electricity. Allow burner to run for several minutes and then carry out combustion tests, refer to the Burner Information Instructions and if necessary, adjust to obtain best results.
- On completion of combustion tests, replace front cover and expansion vessel assembly.

  Note: It is advisable to replace flexible fuel pipes every five years.

Maintenance

- To ensure trouble-free heating and hot water, it is most important that the boiler and burner are correctly serviced.
- This is best carried out by entering into a Service Contract with your Installer.
- Conditions of operation will vary, but with normal usage the following is strongly advised:

  At the end of winter
  - Switch off main switch.
  - Close all stop valves in the oil supply pipes.
  - Clean the flueways and all inside surfaces of the boiler.
  - Clean flue and chimney.
  - Clean all boiler internal surfaces.

  At the end of summer
  - Isolate elctrical supply to the boiler.
  - Switch off main switch.
  - Close all stop valves in the oil supply pipes.
  - Clean the flueways and all inside surfaces of the boiler.
  - Clean flue and chimney.
  - Clean all boiler internal surfaces.

  Also,
  - **De-sludge the fuel tank(s)**
    There should be a sludge valve fitted to the tank(s).
  - **Replace/clean cartridge in main filter**
    If a paper microbic cartridge has been in service

for more than one heating season, a replacement should be fitted. If a metal fine microbic filter is fitted then this should be cleaned with kerosene. Ensure that the filter bowl is thoroughly cleaned out before replacement.

- **Remove the burner**
  Service the burner, refer to the Burner Information Instructions.

- **Clean the boiler**
  This is required as follows if the boiler was not cleaned at the end of the heating season: Remove the expansion vessel assembly and the front access door from the boiler. Remove the retarders and baffle plate, clean any soot and any hard deposits from the boiler surface.

- **Gaskets**
  It is advisable to replace all gaskets which have been disturbed unless it is certain that they are in excellent condition.

- **Check all thermostats**
  Test all thermostats to ensure that they are working correctly. Remove all dust with a soft brush and make sure that accessible contacts are clean.

- **Water system**
  The system water should be topped up as necessary using the filling system provided.

  Filling must be carried out with the system cold so that the pressure can be brought up to the original cold fill reading indicated by the red pointer. A careful watch should be kept on the pressure gauge during filling and the mains pressure valve opened slowly.

  Topping up may, by arrangement, be a part of the annual service contract.

Replacement of Parts

Isolate the boiler from the Electricity, Oil and Water supplies before replacing any components.

On the sealed system boilers it should be remembered that the boiler is under system pressure and, as such, before disconnecting any parts that enter the water shell, the system pressure must be reduced and the boiler drained.

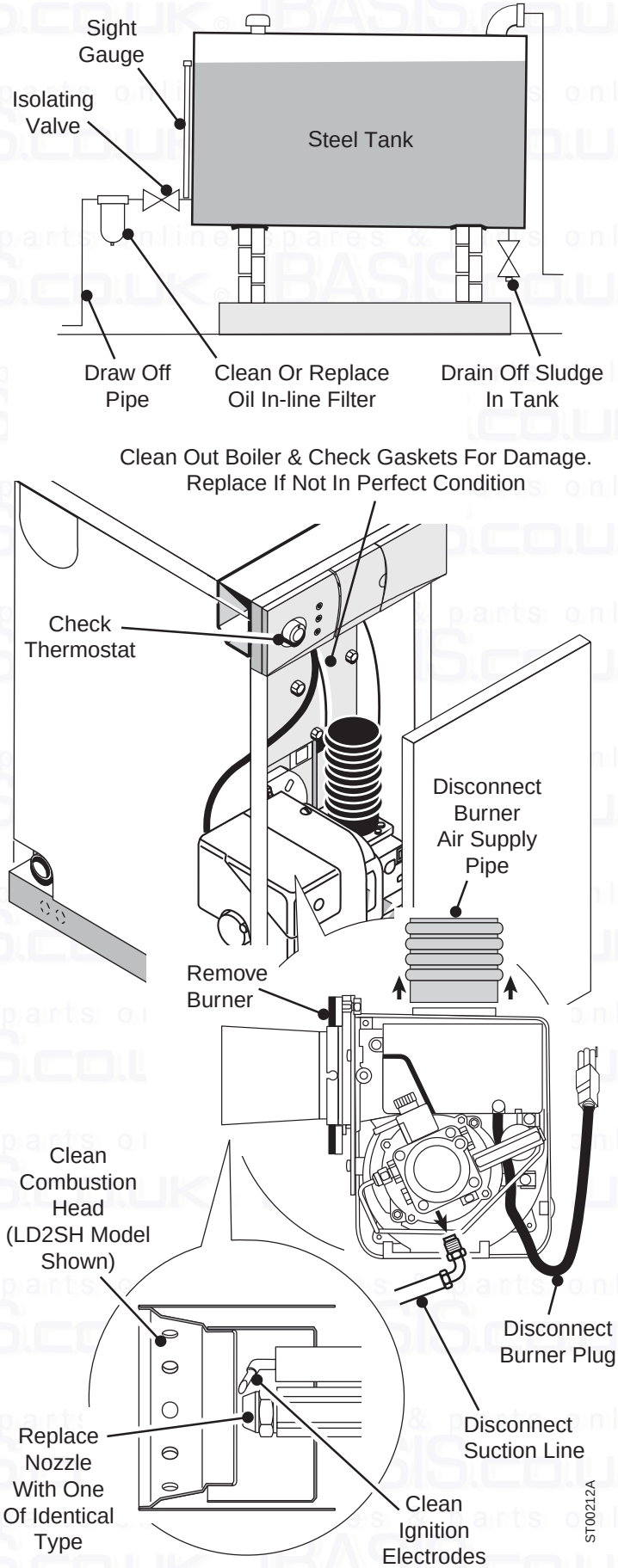

Fig. 26

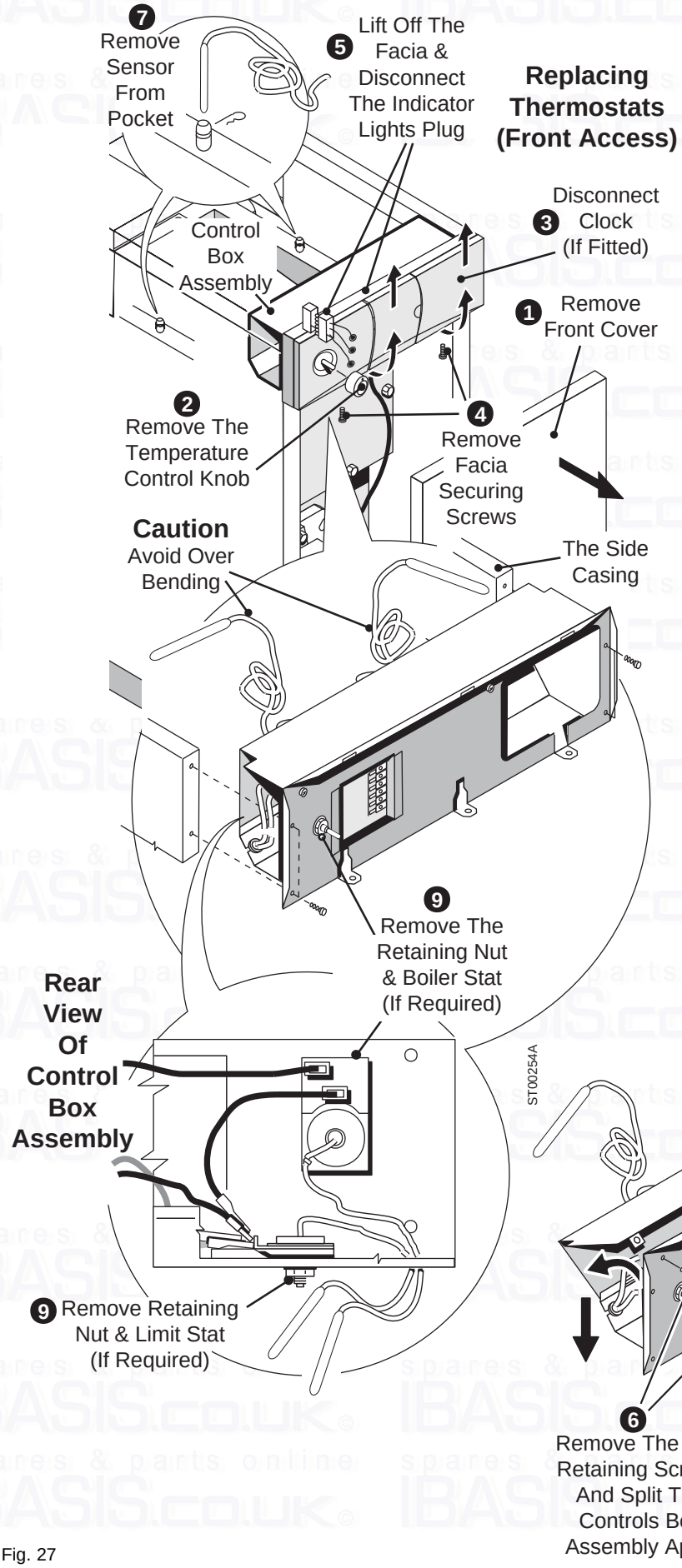

Fig. 27

Replacement of Thermostats (Statesman System)

1. Remove the front cover.
2. Pull off the temperature control knob.
3. If a clock is fitted un-clip from the facia and disconnect the plug at the back.
4. Remove the facia retaining screws at the base of the facia.
5. Lift off the facia and disconnect the indicator lights plug.
6. Remove the retaining screws and split the controls box assembly apart.

Note which way the electrical connectors fit before removing any of the thermostats.

Re-assemble in reverse order unless stated otherwise.

Limit Thermostat

1. Disconnect the electrical connections.
2. Remove the clip and withdraw the temperature gauge bulb and limit thermostat sensor from its pocket.
3. Remove the locknut securing the thermostat to the controls assembly. On re-assembly insert the thermostat sensor before the temperature gauge bulb.

Boiler Control Thermostat

1. Disconnect the electrical connections.
2. Remove the clip and withdraw the sensor from its pocket.
3. Remove the locknut securing the thermostat spindle to the controls assembly.

Replacement of Thermostats (Flowsure/Flowsure+)

1. Remove the front and top covers.
2. Pull off the temperature control knob.
3. Un-clip the programmer assembly and push into the controls assembly.
4. Remove the facia retaining screws at the base of the facia.
5. Lift off the facia and disconnect the indicator lights plug.
6. Disconnect the inside and rear electrical connectors.
7. Remove the controls assembly lid securing screws and remove the lid.

Note which way the electrical connectors fit before removing any of the thermostats.

Re-assemble in reverse order unless stated otherwise.

Boiler Control Thermostat

1. Disconnect the electrical connections.
2. Remove the clip and withdraw the sensor from its pocket.
3. Remove the locknut securing the thermostat spindle to the controls assembly.

Limit Thermostat

1. Disconnect the electrical connections.
2. Remove the clip and withdraw the temperature gauge bulb and limit thermostat sensor from its pocket.
3. Remove the locknut securing the thermostat to the controls assembly. On re-assembly insert the thermostat sensor before the temperature gauge bulb.

Pump Overrun Thermostat

1. Disconnect the electrical connections.
2. Unscrew the two screws securing the thermostat to the controls assembly.
3. Remove the clip and withdraw the sensor from its pocket.

Tank Limit Thermostat (Flowsure+)

1. Disconnect the electrical connections.
2. Unscrew the two screws securing the thermostat to the controls assembly.
3. Remove the clip and withdraw the sensor from its pocket.

DHW Overheat Thermostat (Flowsure)

1. Disconnect the electrical connections.
2. Unscrew the two screws securing the thermostat to the controls assembly.
3. Remove the clip and withdraw the sensor from its pocket.

Heatstore Thermostat (Flowsure+)

1. Disconnect the electrical connections.
2. Unscrew the two screws securing the thermostat to the bracket on the pipe.

Automatic Air Vent

1. Drain the boiler using the boiler drain point provided.
2. Unscrew the automatic air vent and fit a new one in the reverse order.
3. Fill the system as described in Section 2- Pre - installation Requirements.

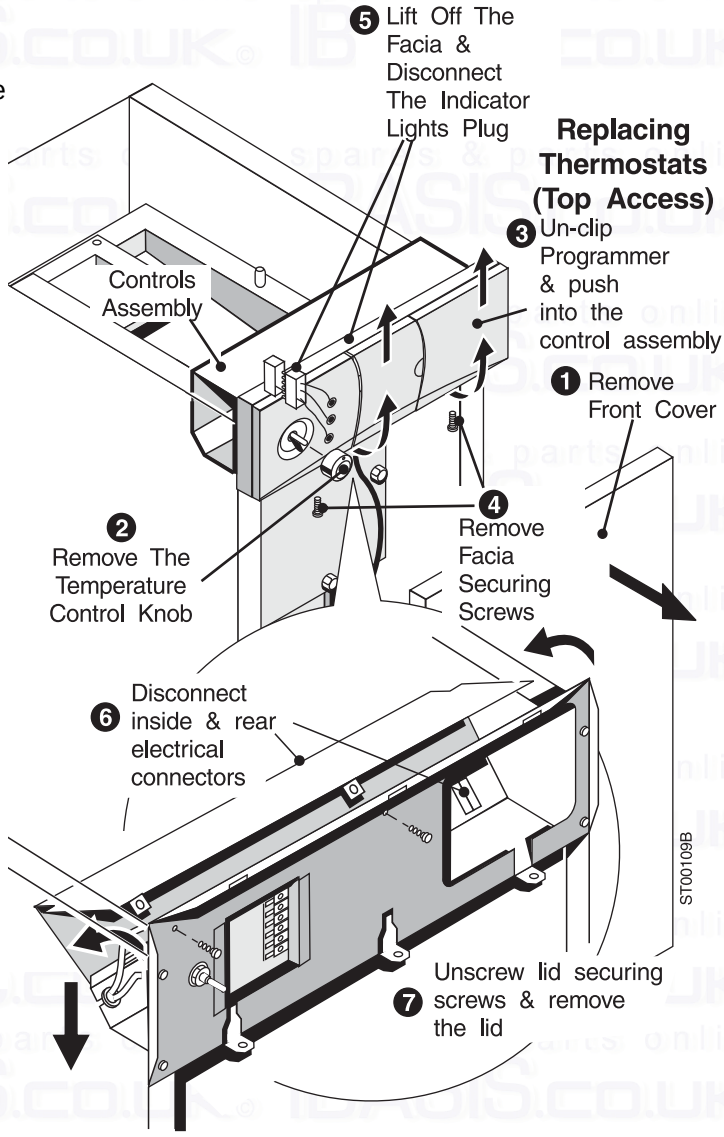

Fig. 28

Pressure Relief Valve

1. Drain the boiler using the boiler drain point provided.
2. Undo the compression fitting connecting the discharge pipe to the relief valve.
3. Undo the pressure gauge sensor retaining nut and withdraw sensor from the relief valve, taking care not to lose the fibre washer seal.
4. Undo the union nut at the rear of the relief valve and pull the relief valve clear of the pipework, taking care not to lose the fibre washer seal.
5. Fit a replacement valve in the reverse order.
6. Fill the system as described in Section 2 - Pre-Installation Requirements.

Circulating Pump

1. Remove the pump electrical cover and disconnect the electrical leads taking note of the wire positions.
2. Turn off the isolating valves mounted on the inlet and outlet of the pump. Undo the two union nuts and remove the pump from between the pipework. **Note:** A residue of water will remain in the pump.
3. Fit a replacement pump with new sealing washers. **Note:** The direction flow indicator on the pump should point from left to right.
4. Open all valves and fill the system as described in Section 2 - Pre-Installation Requirements.

Expansion Vessel

1. Drain the boiler using the boiler drain point provided.
2. Undo the nut connecting the vessel to the flexible pipe from the boiler.
   Take care not to lose the fibre washer seal.
3. Undo the two nuts retaining the expansion vessel assembly bracket to the boiler, lift bracket up and out, remove from boiler.
4. Remove top retaining arm, lift vessel up and out off bracket assembly.
5. Fit a new expansion vessel in reverse order to above.
6. Fill the system as described in Section C - Pre-Installation Requirements.

System Pressure/Temperature Gauge

1. Drain the boiler using the boiler drain point provided.
2. Turn off the isolating valves mounted on the inlet and outlet of the pump.
3. Undo the nut retaining the pressure gauge sensor from the pressure relief valve. Remove sensor, check fibre seal, replace if damaged on replacement of new sensor.
4. Remove the clip and withdraw the temperature bulb from its pocket.
5. Un-clip the temperature/pressure gauge from its bracket, remove gauge, carefully withdrawing sensor and bulb capillary tubes through bracket assembly.
6. Fit a replacement gauge in the reverse order.
7. Open the valves and fill the system as described in Section 2 - Pre-Installation Requirements.

Diverter Valve (Flowsure/Flowsure+)

1. Drain the boiler using the boiler drain point provided.
2. Turn off the isolating valves mounted on the inlet and outlet of the pump.
3. Undo the electrical plug retaining screw on rear of control box lid and disconnect electrical plug.
4. Disconnect the electrical lead from the connection plug, taking note of the wire positions.
5. Undo the two screws, retaining the central heating flow pipe to diverter valve, gently pull pipe away from diverter valve.
6. Undo the two screws, retaining the DHW flow pipe to diverter valve, gently pull pipe away from diverter valve.
7. Undo the two screws, retaining the pump to diverter pipe, remove diverter valve from pipe assembly.
8. Fit a replacement diverter valve in the reverse order, taking care to check and replace if necessary the “O” ring seals, fitted to the pipe tail ends.
9. Open the valves and fill the system as described in Section 2 - Pre-Installation Requirements.

Flow Switch (Flowsure/Flowsure+)

1. Close the mains water isolation valve to boiler.
2. Close the domestic service cock on the mains inlet pipework of the boiler.
3. Drain the residual water from the hot water pipework.
4. Undo the electrical plug retaining screw on rear of control box lid and disconnect electrical plug.
5. Disconnect the flow switch electrical lead from the connection plug, taking note of the wire positions.
6. Undo the nut connecting the flow switch to domestic service cock pipework.
7. Undo the nut connecting the flow switch to water to water heat exchanger pipework.
8. Pull the nuts back and extract the flow switch.
9. Fit new flow switch and new fibre washers in the reverse order, ensuring the flow switch head is inclined at least 15° above horizontal and will not foul the top casing panel. The direction flow indicator on the flow switch head should point in the direction of the water to water heat exchanger.
10. Open the domestic service cock and mains water isolation valve, turn on hot water tap, check connections are sound.

Domestic Service Cock (Flowsure/Flowsure+)

1. Close the mains water isolation valve to boiler.
2. Drain the residual water from the hot water pipework.
3. Undo the nut connecting the domestic service cock to mains inlet pipework.
4. Undo the nut connecting the domestic service cock to flow switch pipework.
5. Pull the nuts back, gently ease out the domestic service cock from the pipework.
6. Fit new domestic service cock in reverse order, ensuring the direction flow indicator on the domestic service cock points to flow switch.
7. Open mains water isolation valve, turn on hot water tap, check connections are sound.

Note: A flow restrictor and filter is fitted in the outlet of the domestic service cock, ensure the correct colour flow restrictor is fitted for the correct boiler model, see Table 1 (page 13).

Flow Restrictor

The flow restrictor cannot be replaced due to its location inside the domestic service cock, it is suggested that the domestic service cock be replaced when required. Follow instructions on replacement in paragraph covering the domestic service cock above.

Domestic Hot Water Plate Heat Exchanger (Flowsure/Flowsure+)

1. Drain the boiler using the boiler drain point provided. On the Flowsure+ drain approximately one litre of water from the heatstore tank using the tank drain point provided, this will prevent excessive residual spillage from the pipework when disconnecting.
2. Close the mains water isolating valve to the boiler, drain the residual water from the hot water pipework.

Flowsure:

1. Remove the flow switch, refer to paragraph, flow switch replacement in this section.
2. Undo nut on cold inlet pipe feed to PHE, remove pipe.
3. Undo nut on hot water outlet pipe from the PHE, remove pipe.
4. Slacken the two screws retaining the DHW flow pipe to the diverter valve. Undo the nut retaining the DHW flow pipe to PHE inlet and swing pipe up and away.
5. Undo the nut retaining the primary return pipe, from the PHE outlet. Slide the plate heat exchanger back and out of the boiler.
6. Fit a new plate heat exchanger in reverse order, ensuring to replace any damaged fibre washers.

Flowsure+:

1. Undo both nuts retaining the mixer valve and flow switch assembly to the plate heat exchanger. Remove assembly, and place aside, ensuring electrical lead is not strained.
2. Undo both nuts retaining the primary return pipe, from PHE outlet and shell top return connections. Remove pipe assembly and place aside.
3. Slacken nut on tank outlet connection, pipe to PHE inlet. Undo nut retaining pipe and slide to one side. Remove plate heat exchanger.
4. Fit a new plate heat exchanger in reverse order, ensuring to replace any damaged fibre washers.

Open all isolation valves, fill the system as described in Section 2 - Pre-Installation Requirements. Vent air from the domestic hot water pipework. Open hot water tap check for correct operation of system.

Note: After the replacement of components, always check for soundness of connections. Always carry out a full functional check of the system.

Controls Assembly and Thermostats - Statesman Flowsure

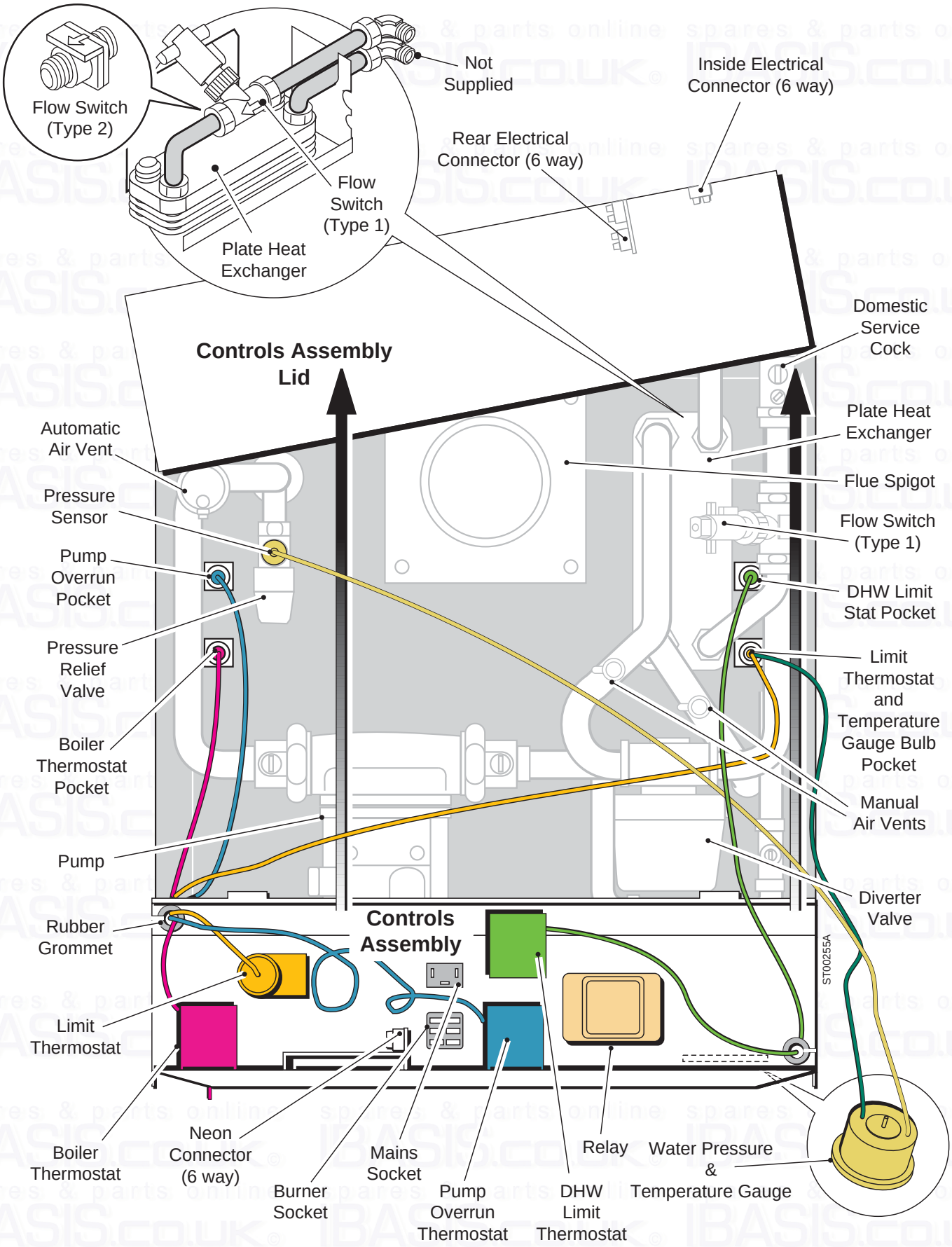

Fig. 29

Controls Assembly and Thermostats - Statesman Flowsure +

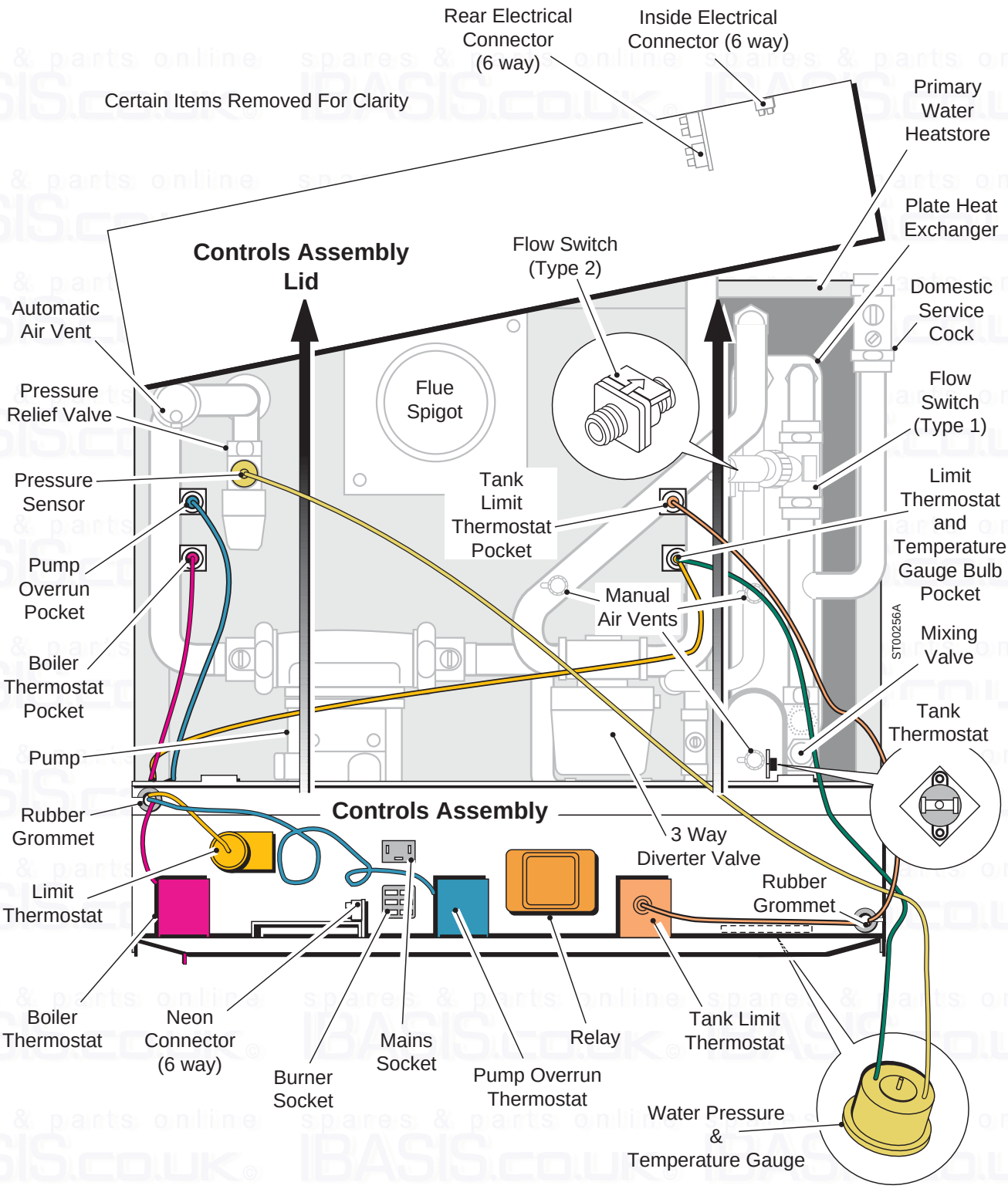

Fig. 30

5 - Fault Finding

SYMPTOM	CHECK LIST	ACTION
Burner Does Not Start, Motor Does Not Run	1. Mains switched on	Switch on
	2. Fuse in switch	Fit a fuse
	3. Fuse blown	Replace fuse
	4. All external controls call for heat	Set to call for heat
	5. Boiler stat calls for heat	Set to an “ON” position
	6. Limit stat tripped - Light on	Reset limit stat
	7. Boiler at lock out - Light on	Reset
	8. Faulty external wiring	Repair if necessary
	9. Faulty external controls	Check that they are operating
	10. Burner control box faulty	Check by fitting spare box
	11. Boiler control panel wiring faulty	Check & refer to wiring diagram Section 1
	12. Burner motor seized	Remove and check ease of rotation

SYMPTOM	CHECK FOR	ACTION
Burner Starts, No Flame Established, No Oil To Burner	1. Oil in the tank	Re-Fill
	2. All valves open from tank to burner	Open valves
	3. Fire valve correctly set	Set as per manufactures instructions
	4. Filter blocked	Clean and replace elements
	5. Air lock in fuel lines	Bleed burner
	6. Nozzle blocked	Replace nozzle
	7. Pump pressure correct	Set to correct pressure refer to Burner Instructions
	8. Pump rotates:- Is it correct for either one or two pipe	Dismantle pump from Motor and check freedom of rotation
	9. Pump drive coupling faulty	Remove pump and examine coupling for signs of wear and damage, refer to Burner Instructions
	10. Solenoid valve not opening	Check operation of the solenoid valve

SYMPTOM	CHECK FOR	ACTION
Burner Starts, No Flame But Oil To Burner	1. Signs of fuel in boiler	Check as for 2 to 8 below
	2. Correct combustion head settings	Set correctly refer to Burner Instructions
	3. Electrodes clean and not damaged	Clean
	4. Nozzle blocked	Replace nozzle
	5. If two pipe system, check pipe work is correct	Amend as necessary
	6. Faulty Transformer	Replace control box if no spark is suspected
	7. Electrode leads shorting out	Check leads for signs of shorting if found replace. Refer to Burner Instructions
	8. Faulty pump solenoid	Replace pump assembly

SYMPTOM	CHECK FOR	ACTION
Burner Starts, Flame Established But Goes To Lock Out After 15 Seconds	1. Intermittent oil supply	Check for dirt in filters or oil in fuel lines
	2. If two pipe system, that pipework is correct	Refer to Table 5, Page 23
	3. Combustion head settings correct	Refer to Burner Instructions
	4. Photocell not fitted correctly	Replace correctly
	5. Photocell circuit faulty	Replace
	6. Dirty Photocell	Clean and replace

SYMPTOM	POSSIBLE CAUSE	ACTION
Locks Out In Morning Only	1. Combustion air setting too high	Re-set and confirm by measuring CO_2 refer to Burner Instructions
	2. Air collects in system overnight	Examine all joints and if suspect re-make
	3. Faulty non return valve - 2 pipe system	Replace faulty valve

SYMPTOM	CHECK FOR	ACTION
Flame Established But Not Maintained	1. Air in fuel line	Check for joints for increases of air rectify as necessary, bleed burner and restart
	2. Combustion settings incorrect	Adjust settings and confirm by flue gas analysis
	3. Wrong grade of oil	Obtain correct grade of fuel or in case of conventional flue models adjust burner for correct grade.
	4. Combustion products leaking	Check all seals, particularly the gasket between burner and boiler
	5. Combustion products re-circulating into balanced flue terminal	Insert CO_2 probe and check

SYMPTOM	CHECK FOR	ACTION
Burner Runs But Smoke, and or Smell, and or Pulsation	1. Correct grade of fuel used	Either adjust for fuel used or drain and refill tank correctly
	2. Correct nozzle fitted	Refer to Burner Instructions and fit correct nozzle
	3. Correct oil pressure	Refer to Burner Instructions and set correct pressure
	4. Correct air settings	Do combustion checks and re-set
	5. Air in fuel lines	Bleed air from lines
	6. Adequate access for combustion air	Refer to Section 2
	7. Adequate ventilation	Refer to Section 2
	8. One sided flame	Remove burner, clean and re-check settings, refer to Burner Instructions Clean or replace the nozzle
	9. Oil leak within burner.	Remove burner and examine for leakage, repair suspect joints
	10. Oil leak to burner within boiler	Suspect pump solenoid, replace pump assembly
	11. Flue plus boiler resistance too high	Check retarders & baffle plate positions, check for obstructions
	12. Defective nozzle	Replace nozzle with one of same specification

SYMPTOM	POSSIBLE CAUSE	ACTION
	13. Bad oil cut off	Bleed air from pump or replace pump assembly
	14. Dirt collecting on fan	Remove burner and clean
	15. Combustion products leaking	Check all joints, replace suspect seals

SYMPTOM	POSSIBLE CAUSE	ACTION
Other Problems	1. Boiler frequently tripping on limit stat	Replace limit stat
	2. Limit stat calibration too low Boiler stat max temperature too high	Check outlet temp of boiler and if necessary replace
	3. Lack of flow through boiler.	If possible try circulating pump on higher setting (Statesman only)
	4. Condensation from Chimney	Could take place in cold weather due to high efficiency of boiler. Check system complies with Standard
	5. Noisy Motor	Look for signs of oil leaking from pump, motor and coupling
	6. Pump pressure oscillating	Air in oil, Dirt in pump regulating valve Defective pump coupling Faulty gauge
	7. Faulty pump cut off:- oil in boiler	Defective Solenoid valve Air in fuel lines

A Burner Fault Finding Guide is incorporated within the Burner Information Instructions.

6 - Short Spares

Drg. Ref.	Description	Model - see key	Makers Part Number
1	Boiler thermostat	E, F, G	26009018
2	Thermostat knob	E, F, G	26002014
3	Limit thermostat	E, F, G	26009097
4	Mains inlet plug	E, F, G	26009004
5	Retarder	E, F, G	26001335
6	Baffle Plate	E, F, G	5105964
7	Front plate seal	E, F, G	5102818
7a	Front plate seal	E, F, G	5102816
8	Viewing glass	E, F, G	10/17500
9	Viewing glass gasket	E, F, G	5000726
10	Air duct tube	E, F, G	26003019
11	Jubilee clips	E, F, G	26009029
12	Red neon	E, F, G	26009009
13	Amber neon	E, F, G	26009010
14	Viewing glass gasket	E, F, G	10/17499
15	Green neon	E, F, G	26009011
16	Expansion Vessel	E, F, G	26009157
17	Expansion Vessel Flexible Hose	E, F, G	26009158
18	Drain Elbow - Boiler	E, F, G	26009109
19	Automatic Air Vent	E, F, G	26009104
20	Pressure Safety Valve	E, F, G	404S601
21	Circulating Pump	E, F, G	405/0317
22	Pressure/Temperature Gauge	E, F, G	26009159
23	Diverter Valve	F, G	26009160
24	Double Check Valve	F, G	26009144
25	Flow Switch	F, G	26009166
26	Switch - 2 Position	F, G	26009090
27	Pump Overrun Thermostat	F	404507
	Pump Overrun Thermostat	G	26009156
28	Plate Heat Exchanger	F	26009107
29	Plate Heat Exchanger	G	26009146
30	DHW Limit Thermostat	F	5106362
31	Tank Thermostat	G	10/18763
32	Tank Limit Thermostat	G	26009156
33	Drain Elbow - Tank	G	26009149
34	Mixer Valve	G	26009148
35	Manual Bleed Valve	F, G	10/18944
36	Isolator Valve (System Fill)	F, G	10/11066
37	Flexible Hose (System Fill)	F, G	26009161
38	Cold Main Isolator Valve (System Fill)	F, G	10/20142
39	Switch - 3 Position	F, G	404S684
40	Timer - ElectroMechanical	F, G	10/19114
41	Domestic Service Cock	F	10/20141
42	Domestic Service Cock	G	26009168
43	Relay	F, G	26009126

Key: E = System. F = Flowsure. G = Flowsure +

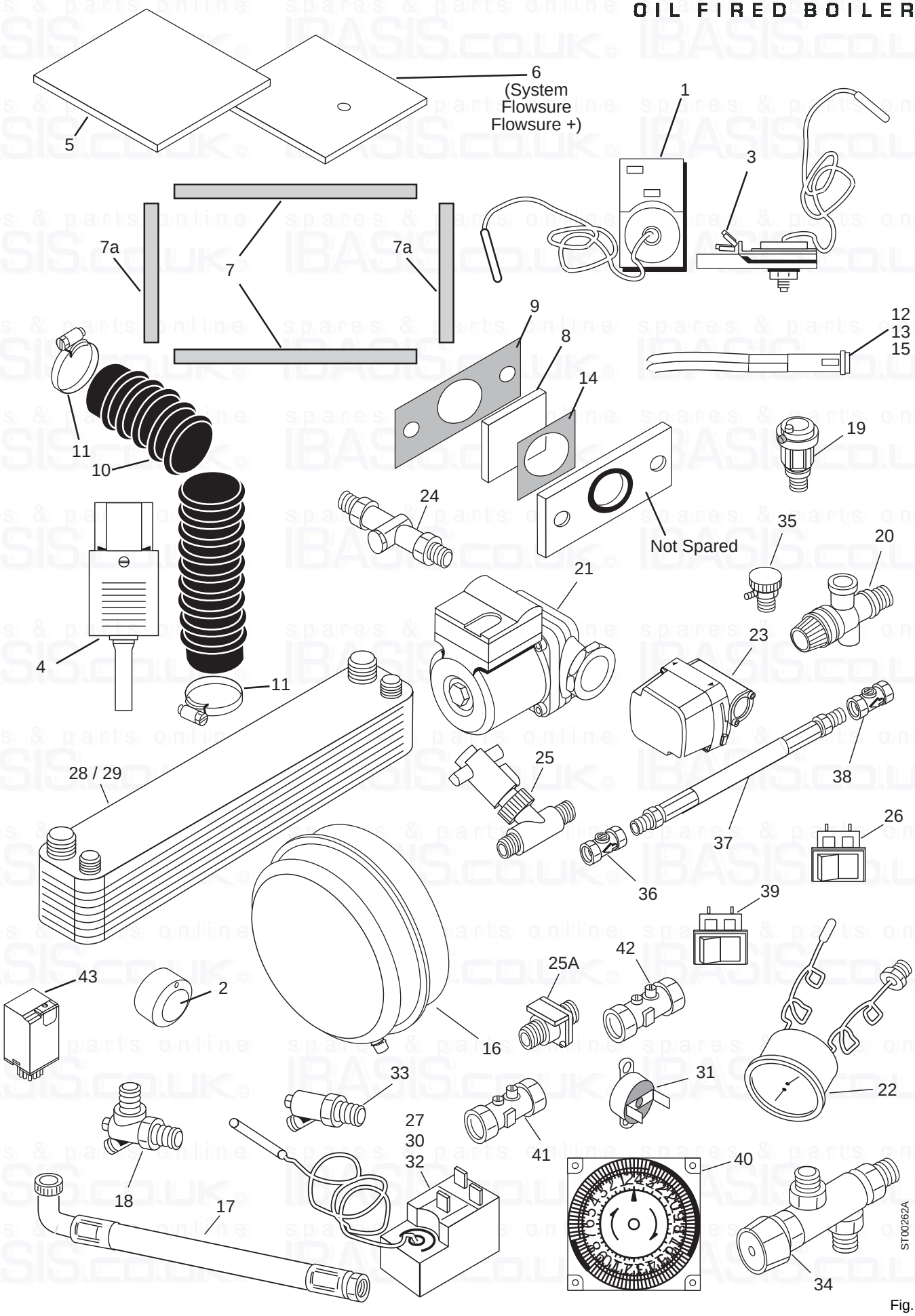
6
(System
Flowsure
Flowsure +)
5
1
3
7a
7
7a
9
8
12
13
15
14
11
10
19
24
Not Spared
35
20
21
4
23
11
28 / 29
25
38
26
37
36
39
42
25A
43
2
16
22
33
31
27
30
32
41
40
18
17
34
ST00262A

Fig. 33

7 - Flue Kit Options

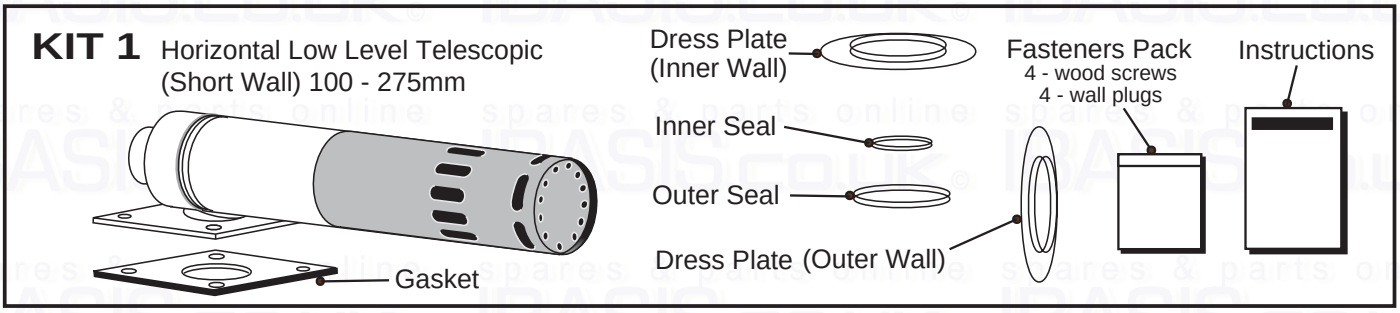

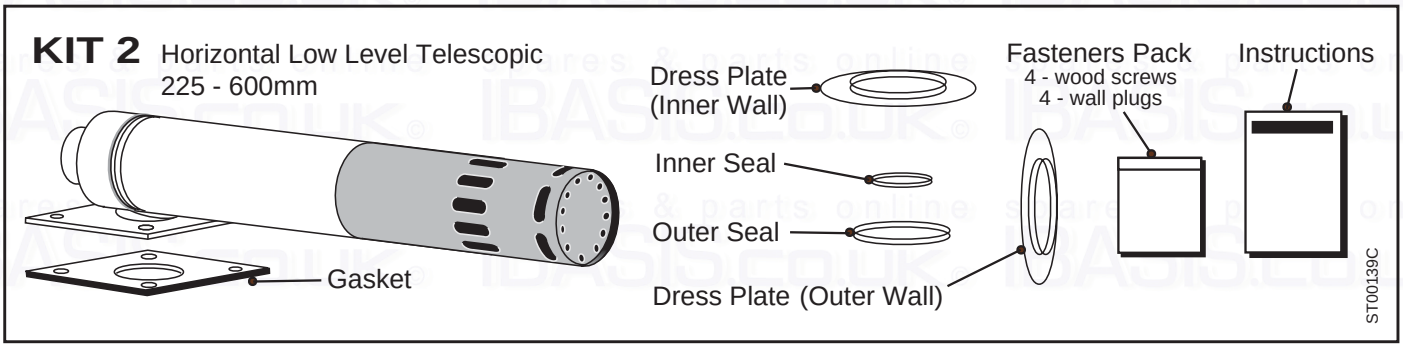

Kit 5
Horizontal and Vertical Flue Extension 950mm

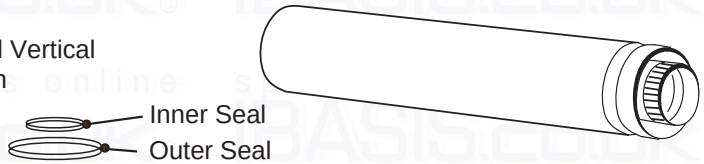

Kit 6
Horizontal and Vertical Flue Extension 300mm

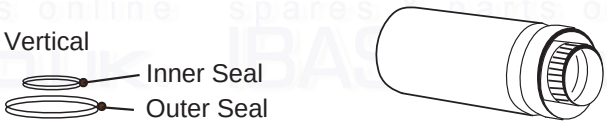

Kit 7
Horizontal High Level Telescopic (Short Wall) 100 - 275mm

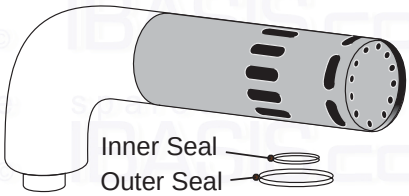

Kit 4
Vertical Through The Roof Terminal

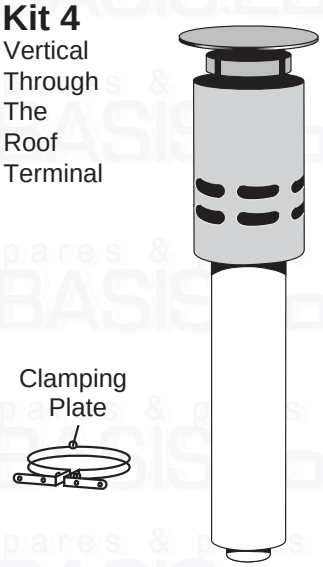

Kit 8
Horizontal High Level Telescopic 225 - 525mm

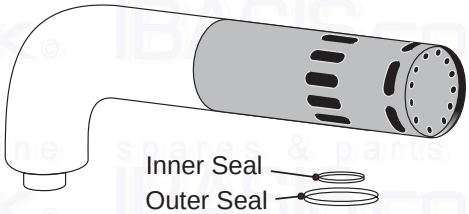

Kit 11
Terminal Guard **(Supplied with Kits 1, 2, 7 & 8)**

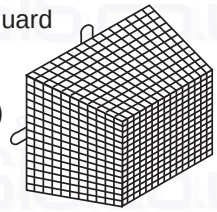

Kit 12
Low Level Riser

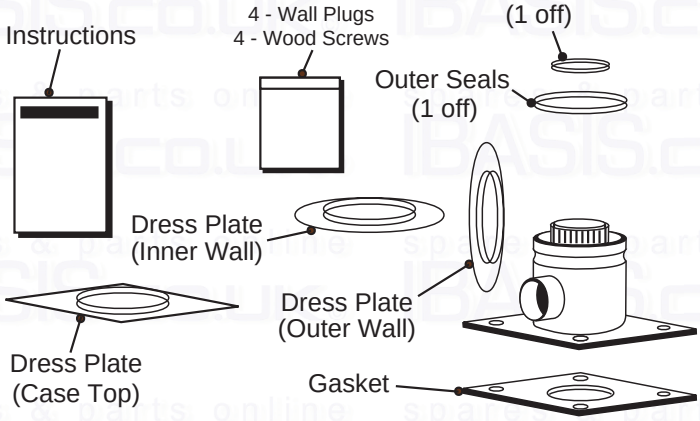

Kit 3
Vertical High Level Riser Telescopic

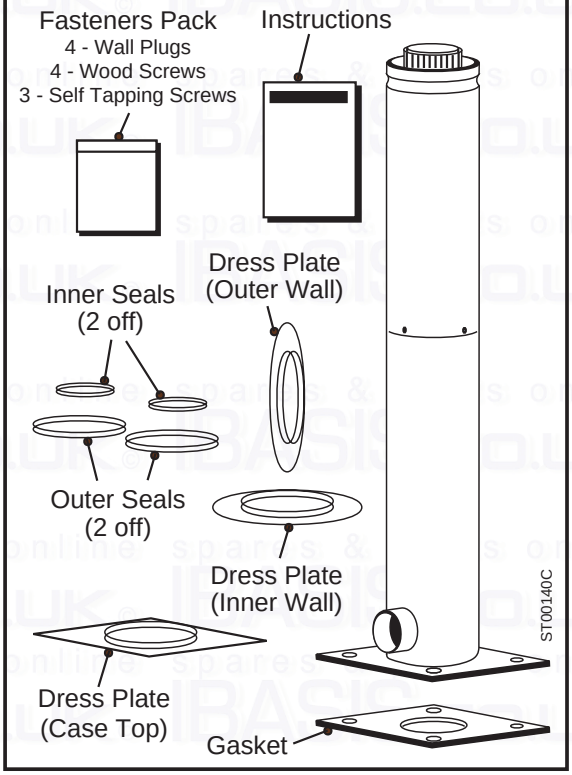

Kit 9
Flashing Flat Roof

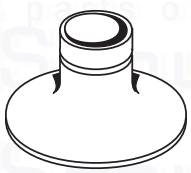

Kit 10
Flashing Pitched Roof 22˚ to 45˚

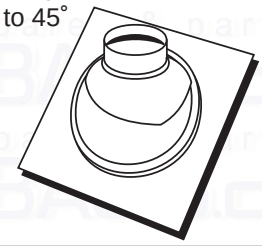

Publication No. 5106463 - Iss. **01** (12/2001)

General Enquiries

Tel. 08706 060 780

Technical *

Tel. 08706 049 049

Service *

Tel. 08706 096 096

Fax. 01926 410 006

Literature Request

Tel. 08706 060 623

* To aid continuous improvement and staff training, calls to this line may be monitored or recorded.

All descriptions and illustrations provided in this leaflet have been carefully prepared but we reserve the right to make changes and improvements in our products which may affect the accuracy of the information contained in this leaflet. All goods are sold subject to our standard Conditions of Sale which are available on request.

POTTERTON

Baxi Potterton
Brownedge Road, Bamber Bridge
Preston, Lancashire
PR5 6SN

www.potterton.co.uk