POTTERTON

OIL FIRED BOILERS

Installation & Service Instructions

Statesman

45/50L, 50/70L,
70/90L, 90/110L

About the Boiler

This is a Floor Standing, Horizontally Fired, Automatic Pressure Jet Oil Boiler.
The boiler can be flued conventionaly or with a kit as a balanced flue.
This boiler is for use with Kerosine and for use in GB & IE.
This boiler can be converted for use with Gas Oil (CF only, not 45/50L).

About Safety

Installation must be in accordance with the Installation & Service Instructions and the rules in force.

Leave these instructions with the user for use on future calls.

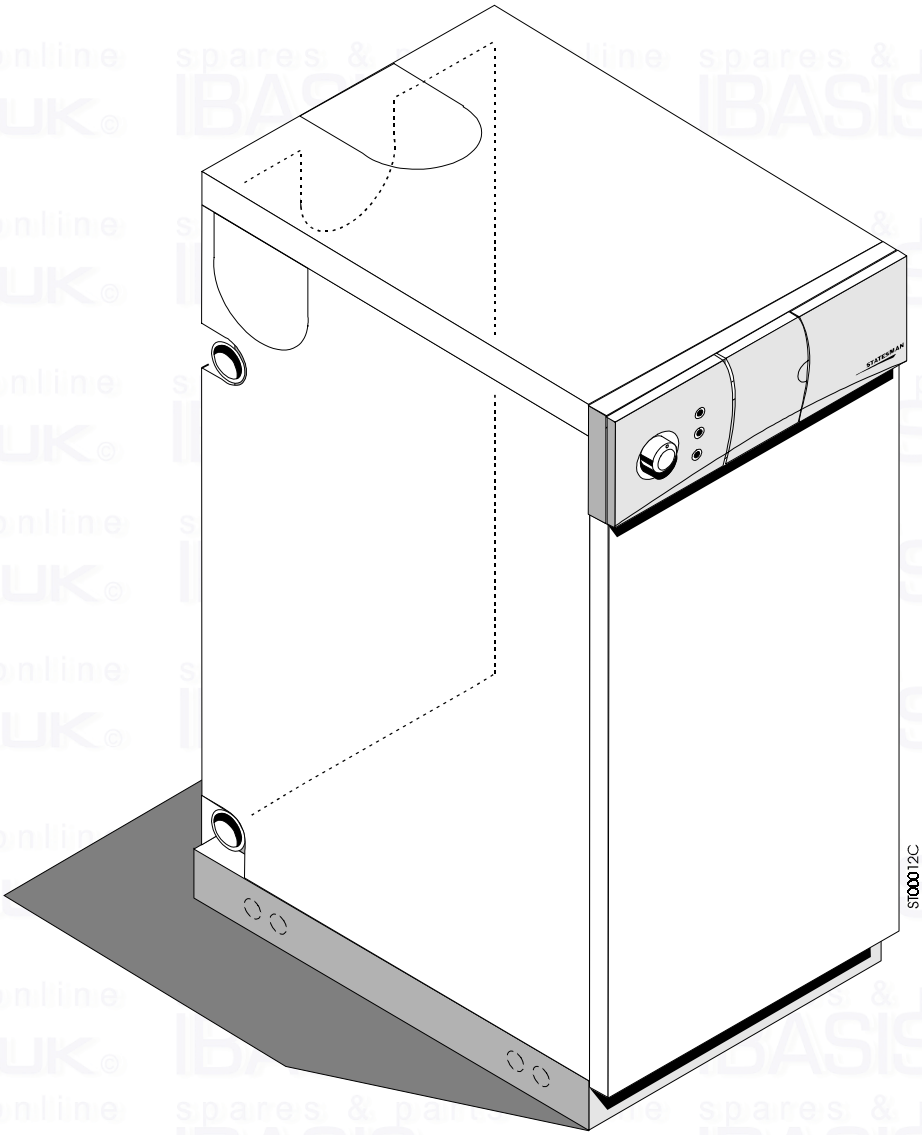

spares & parts online IBASIS.CO.UK

Contents

Section 1 - Technical Data.....4
Health & Safety Information.....4
Control Panel Wiring Diagram.....5
Technical Data.....6
Boiler Dimensions & Clearances.....7
Flue Layouts.....8

Section 2 - Pre-Installation Requirements.....9
Chimneys/Flues.....10
Combustion & Ventilation Air Requirements.....11
Balanced & Low Level Terminal Clearances.....12
Oil Tanks & Layouts.....14
Floor Temperatures.....16

Section 3 - Installation & Commissioning.....18
Conventional Flue.....19
Electricity Supply.....19
Fuel Pipes.....20
Wiring Diagrams.....21
Water Connections.....22
Thermostats.....22
Commissioning.....24

Section 4 - Servicing & Maintenance.....27
Servicing.....27
Maintenance.....27
Replacement of Parts.....28
Limit Thermostat.....29
Boiler Control Thermostat.....29

Section 5 - Fault Finding.....30
Burner does not start, motor does not run.....30
Burner starts, no flame established, no oil to burner.....30
Burner starts, no flame but oil to burner.....31
Burner starts, flame established but goes to lockout after 15 seconds.....31
Locks out in mornings only.....31
Flame established but not maintained.....32
Burner runs but smoke, and or smell, and or pulsation.....32
Other problems.....33

Section 6 - Spare Parts.....34

Section 7 - Flue Kit Options.....35

WARNING ! - this is about YOUR safety

Safe use of Kerosines and Gas Oils

Hazards

These fuels give off a flammable vapour when heated even moderately.

This vapour ignites easily, burns fiercely and can be explosive.

Vapour can flow along at ground level and collect as an explosive mixture in drains, cellars etc. at considerable distances from open containers or spillages.

Fuels remove natural oils and fats, and may thus cause cracking and irritation of the skin.

Gas oil may also cause irreversible damage to your health on prolonged or repeated skin contact.

Precautions

ALWAYS HANDLE	fuels in the open air or in a well ventilated place, well away from all sources of ignition such as fires, sparks, hot surfaces and **DO NOT SMOKE**.
ALWAYS DRAIN	fuels using a proper fuel retriever, mechanical siphon or funnel.
NEVER SUCK	fuels up a tube by mouth. If accidentally swallowed - call a doctor - **DO NOT INDUCE VOMITING**.
NEVER APPLY	heat to a fuel tank, pipework or container.
AVOID INHALING	fuel vapour; it can make you light-headed and seriously impair your judgement.
ALWAYS STORE	fuels in a properly constructed and labelled tank.

If there is a Fuel Spillage

IMMEDIATELY	**STOP/SWITCH OFF** all electrical and other ignition risks
REMOVE	all contaminated clothing to safeguard yourself against fire risk and skin damage. Wash the affected skin thoroughly with soap and water and remove the clothing to a safe, well ventilated place and allow to air before washing or dry cleaning.
CONTAIN	and smother the spill using sand, soil or other suitable incombustible material.
DO NOT ALLOW	spilled fuel to escape into drains or water courses. If fuel does enter a drain, warn the Water Authority and Fire Brigade.
CONSULT	your Local Authority about disposal of contaminated soil.
FIRST AID	if fuel is accidentally swallowed, **SEEK IMMEDIATE MEDICAL ATTENTION - DO NOT INDUCE VOMITING**.
	if fuel is splashed into eyes, wash out with running water for at least 10 minutes and **SEEK IMMEDIATE MEDICAL ATTENTION**.

1 - Technical Data

- The Statesman boilers are horizontally fired, automatic pressure jet boilers. These boilers are intended for use on indirect central heating systems. Their use on direct systems is not recommended.
- The boilers as supplied can be installed directly to suitable conventional chimneys. For balanced flue installations, an appropriate flue kit is additionally required.
- The Statesman boilers have been independently tested to standards EN 55014 and EN 50082-1 and show compliance with the E.M.C. Directive 89/336/EEC.
- The boiler has an easily removable front access door which gives quick access for cleaning.
- The maximum static head of water permissible is 27.44 metres (90 ft).
- Water flow and return connections are provided on each side and rear of the boiler (dependant on model).

Note: When installing the boiler, make sure all unwanted tappings are blanked off.

Health & Safety Information for the Installer & Service Engineer

Under the Consumer Protection Act 1987 and Section 6 of the Health and Safety at Work Act 1974, we are required to provide information on substances hazardous to health.

Small quantities of adhesives and sealants used in the product are cured and present no known hazards when used in the manner for which they are intended. The following substances are also present:

Insulation and Seals

Material - Man Made Mineral Fibre.
Description - Boards, Ropes, Gaskets.
Known Hazards - Some people can suffer reddening and itching of the skin. Fibre entry into the eye will cause foreign body irritation which can cause severe irritation to people wearing contact lenses. Irritation to respiratory tract.
Precautions - Dust goggles will protect eyes. People with a history of skin complaints may be particularly susceptible to irritation. High dust levels are only likely to arise following **harsh** abrasion. In general, normal handling and use will not present high risk, follow good hygiene practices, wash hands before, touching eyes, consuming food, drinking or using the toilet.
First Aid - Medical attention must be sought following eye contact or prolonged reddening of the skin.

Flue Gas Sampling Point

To aid commissioning, a flue gas sampling point is built into the heat exchanger front access door. If this door is removed make sure that when re-fitted, the sampling point is at the top.

Oil Pipe Installation

The boiler base features "Knock Out" holes for installation purposes. Remove using a drift or dot punch as required. Grommets are provided for cable protection within the connection pack. Additional holes have been provided in the front of each side of the base. These are to provide more options when bringing in the fuel hoses and if required, electrical wiring.

Burner

The burner is an automatic pressure jet type, pre-wired, with a photocell flame failure control.
The standard burner fitted is the Riello RDB range with different combustion heads to suit boiler ratings.

Boiler Thermostats

A pre-wired control thermostat is provided with each boiler. This thermostat is calibrated to give a maximum boiler temperature of 82°C (180 °F) and a minimum temperature of 55 °C (130 °F). Under no circumstances should the boiler be operated below the minimum indicated setting, or below a flow temperature of 55 °C (130 °F). For best operation it is suggested that the boiler should be operated at a setting just below maximum on the thermostat setting. The boiler also has a limit (overheat) thermostat calibrated to operate at 110 °C (230 °F). This is located on the underside of the control panel, see the Users Instructions.

System & Boiler Control

Due to the high efficiency of the Statesman boilers, the following should be taken into consideration during installation:-

Control of the Boiler: When the demand for heating and/or hot water is satisfied, the controls should be arranged such that the burner is switched off. If due to the system design nuisance tripping of the overheat thermostat occurs, it may be advisable to fit a pump overrun device (Incorporating a by-pass system where necessary).

Statesman

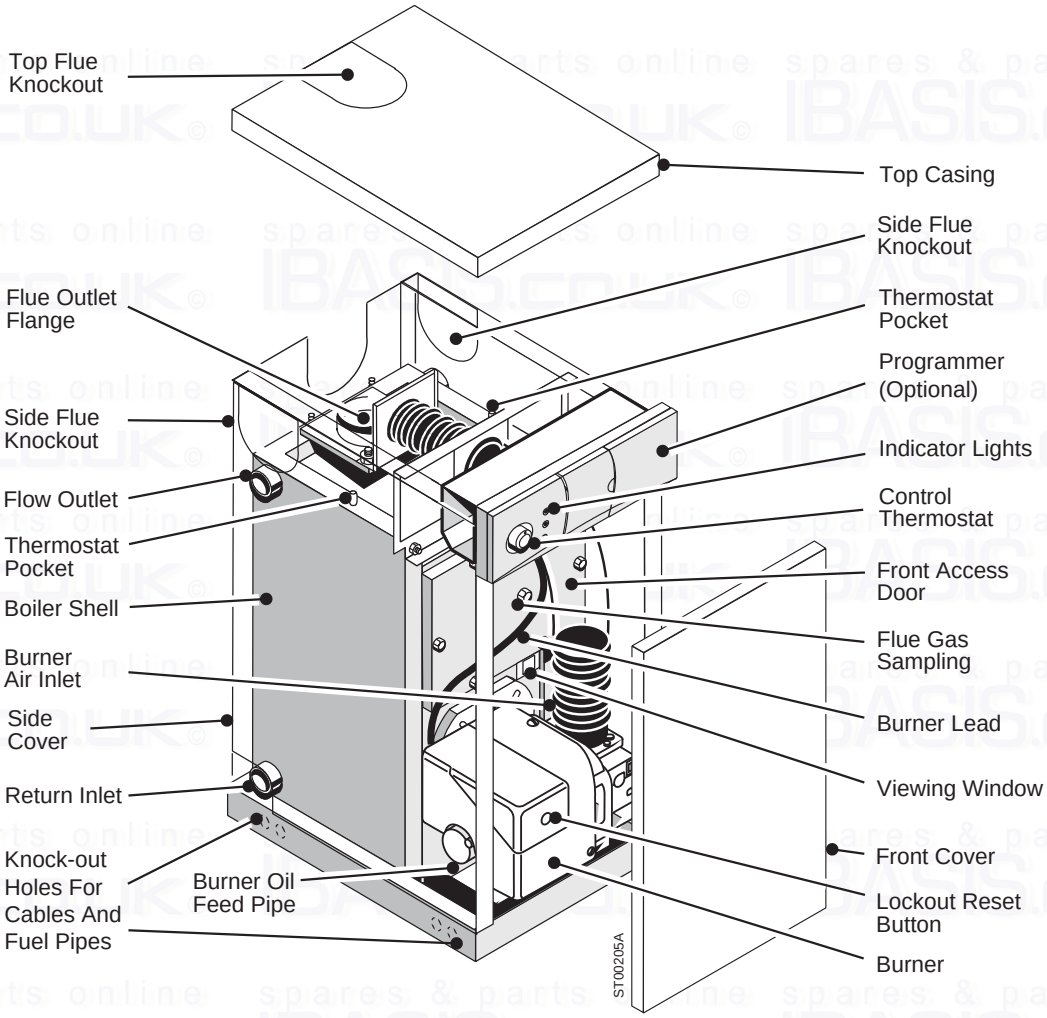

Fig. 1

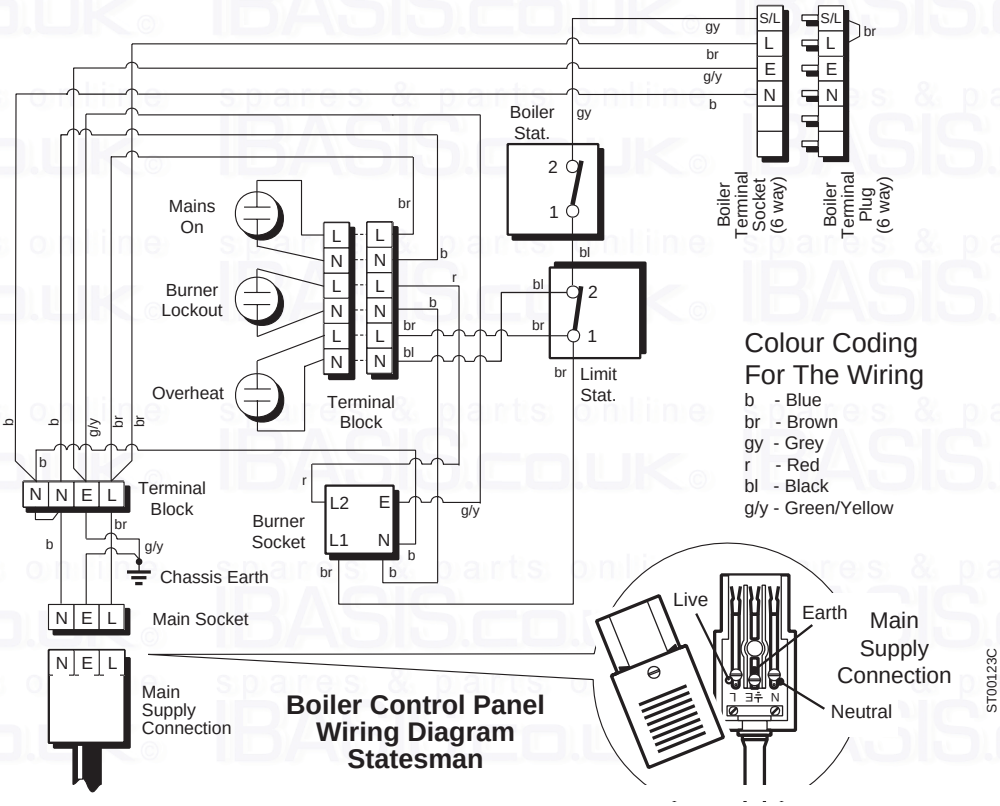

Boiler Control Panel Wiring Diagram Statesman

Fig. 2

Technical Data

Model		45/50		50/70		70/90		90/110	
		Btu/h	kW	Btu/h	kW	Btu/h	kW	Btu/h	kW
Maximum Output		51,000	15	68,000	20	89,000	26	110,000	32
Minimum Output		44,000	13	51,000	15	68,000	20	89,000	26
Factory Set Output	Kerosine	51,000	15	60,000	17.5	79,000	23	99,000	29
Riello Burner Type		RDB1		RDB1		RDB1		RDB2	
Combustion Head Type	Kerosine	LD2SH		LD2SH		LD3		LD3	
	Gas Oil	LD2SH		LD2SH		LD3		LD3	
Nett Full Load Efficiency	%	93.2		91.9		91.0		90.8	
Boiler Gas Volume	m³	0.041		0.041		0.058		0.055	
Exit Flue Gas Mass Flow (Max)	Kg/h	23.42		32.45		40.09		51.62	
Flue Gas Temperature Rise Above Ambient	ºC	200		190		205		195	
Resistance To Combustion Products	mbar	0.15		0.3		0.4		0.45	
Maximum Hearth Temperature	ºC	60		50		50		50	
Water Side Resistance (Cold)									
10ºC Differential	mbar	11.0		11.0		21.2		18.3	
20ºC Differential	mbar	4.0		4.0		6.7		1.9	
Maximum Static Head		90ft. Water (40 p.s.i.)							
Minimum Static Head		5.0ft. Water (3.0 p.s.i.)							
Maximum Operating Temperature		82ºC (180ºF)							
Minimum Operating Temperature		55ºC (131ºF)							
Maximum Boiler Operating Pressure		3 Bar (43.5 p.s.i.) (Class 2)							
Conventional Flue Draught at Boiler Flue Outlet		0.035"w.g. (8.75N/m²) Minimum 0.16"w.g. (40.0N/m²) Maximum							
Limit Thermostat Setting		110ºC (230ºF) Manual Reset							
Maximum Casing Panel Temperature		Less Than 35ºC Above Room Temperature							
Maximum Surface Temperatures of Adjusting, Control & Safety Devices		Less Than 30ºC Above Room Temperature							
Electrical Supply		230V 1 Phase 50Hz Fuse 5A							

Table 1

Boiler Dimension & Clearances

Model			45/50	50/70	70/90	90/110
Height	mm	A	850	850	850	850
Width	mm	B	390	390	490	490
Depth	mm	C	565	565	565	565
Centre of Flue from rear	mm	D	100	100	100	100
Flue Diameter	mm	E	100	100	125	125
Height between connections	mm	F	569	569	569	569
Height of bottom connection	mm	G	97	97	97	97
Distance of connection from wall	mm	H	59	59	59	59
Return Connections	2 off	J	1" B.S.P.	1" B.S.P.	1" B.S.P.	1" B.S.P.
Flow Connections	2 off	K	1" B.S.P.	1" B.S.P.	1" B.S.P.	1" B.S.P.
Weight Empty	Kg		105	105	122	128
Water Content	Litre		18.2	18.2	20.5	22.5
Water Content	Imp		4.0	4.0	4.5	5.0
Oil Supply Connection	BSP		¼"	¼"	¼"	¼"
Installation Clearances						
Front	mm		610	610	610	610
Top	mm		12	12	12	12
Sides (Balanced Flue)	mm		6	6	6	6
Sides (Conventional Flue)	mm		25	25	25	25

Table 2

SEDBUK Declaration for Statesman (Kerosine)

Model	Seasonal Efficiency (SEDBUK) (%)
45/50	85.7
50/70	85.7
70/90	85.3
90/110	85.2

This value is used in the UK Government's Standard Assessment Procedure (SAP) for energy rating of dwellings. The test data from which it has been calculated have been certified by 1053.

SEDBUK Declaration for Statesman (Gas Oil - Mid Range)

Model	Seasonal Efficiency (SEDBUK) (%)
50/70	85.5
70/90	85.5
90/110	85.4

This value is used in the UK Government's Standard Assessment Procedure (SAP) for energy rating of dwellings. The test data from which it has been calculated have been certified by 1053.

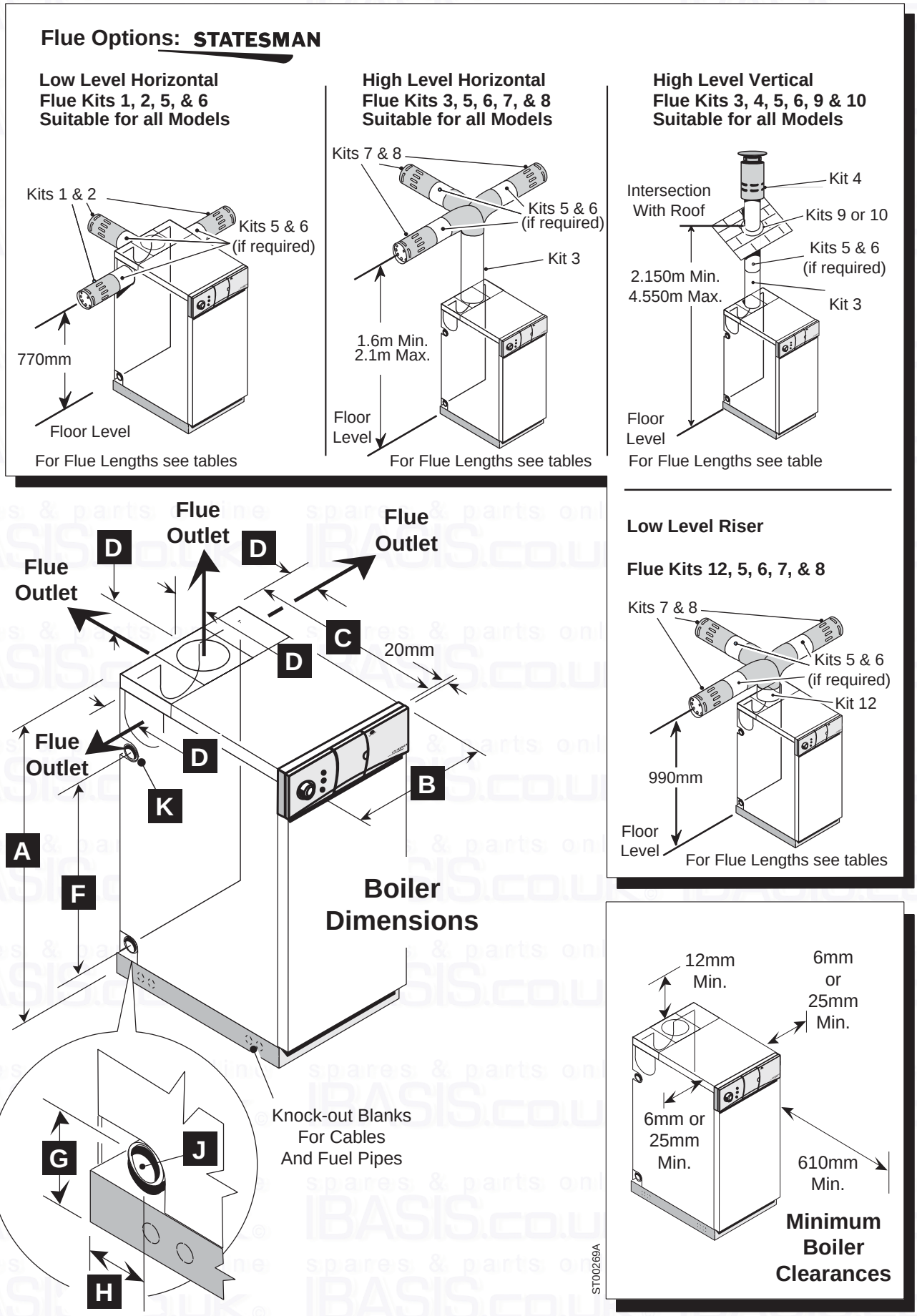
Flue Options: STATESMAN
Low Level Horizontal
Flue Kits 1, 2, 5, & 6
Suitable for all Models
Kits 1 & 2
Kits 5 & 6
(if required)
770mm
Floor Level
For Flue Lengths see tables
High Level Horizontal
Flue Kits 3, 5, 6, 7, & 8
Suitable for all Models
Kits 7 & 8
Kits 5 & 6
(if required)
Kit 3
1.6m Min.
2.1m Max.
Floor
Level
For Flue Lengths see tables
High Level Vertical
Flue Kits 3, 4, 5, 6, 9 & 10
Suitable for all Models
Intersection
With Roof
Kit 4
Kits 9 or 10
Kits 5 & 6
(if required)
2.150m Min.
4.550m Max.
Kit 3
Floor
Level
For Flue Lengths see table
Low Level Riser
Flue Kits 12, 5, 6, 7, & 8
Kits 7 & 8
Kits 5 & 6
(if required)
Kit 12
990mm
Floor
Level
For Flue Lengths see tables
Flue
Outlet
D
Flue
Outlet
D
Flue
Outlet
C
D
20mm
Flue
Outlet
D
K
B
A
F
Boiler
Dimensions
Knock-out Blanks
For Cables
And Fuel Pipes
G
J
H
12mm
Min.
6mm
or
25mm
Min.
6mm or
25mm
Min.
610mm
Min.
Minimum
Boiler
Clearances
ST00269A

Fig. 3

2 - Pre-Installation Requirements

As with all building services, the oil fired systems have to be installed so as to ensure safe and efficient operation. The following notes provide a guide to current best practice. It is important that documents relating to Building Regulations and Standards are studied.

In addition we also recommend the following OFTEC publications:-

Technical Information Book 3
Installation requirements for oil fired boilers and oil storage tanks.

Technical Information Book 4
Domestic heating systems
These books are available from OFTEC, Century House, 100 High Street, Banstead, Surrey SM7 2NN.

Training
Potterton have several training centres around the country, for details of courses for oil firing telephone 0845 6007402. OFTEC also hold training courses on oil fired central heating.

Regulations and Standards
The installation of oil fired boilers is covered by the requirements of the Building Regulations which are statutory instruments and must be complied with.

Those for England and Wales are made by the Department of the Environment in London.

The Building Standards (Scotland) Regulations are made by the Scottish Office. Part F of the Technical Standards to the Regulations covers heat producing appliances and fuel storage.

The Building Regulations (Northern Ireland) are made by the Northern Ireland Department of the Environment. Heat producing appliances, including oil heating appliances, are covered by Technical Booklet L.

The Isle of Man has its own Building Bye-laws. In the Channel Islands, Jersey and Guernsey have their own separate Building Bye-laws.

The British Standard covering oil fired boiler installation is BS5410. This is issued as Part 1:1977 for installations up to 45 kW and Part 2:1978 for larger installations. This standard also covers oil storage tank installations.

Additional standards and regulations

- BS 5449: 1990 Forced circulation hot water

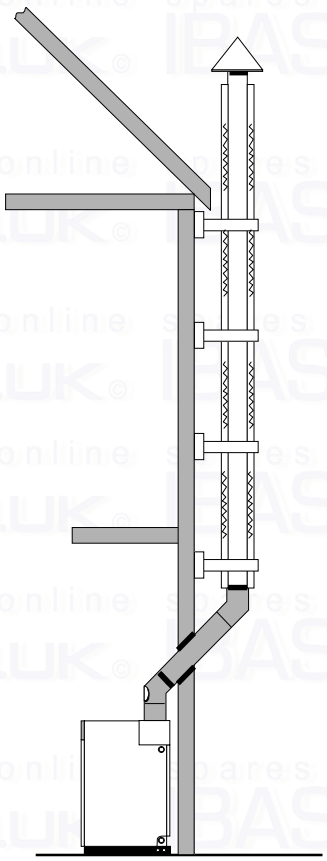

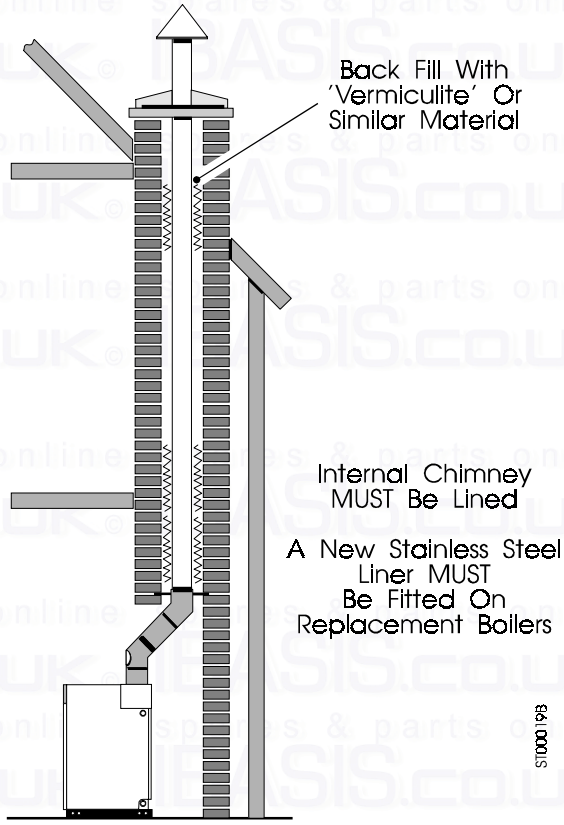

Fig. 4

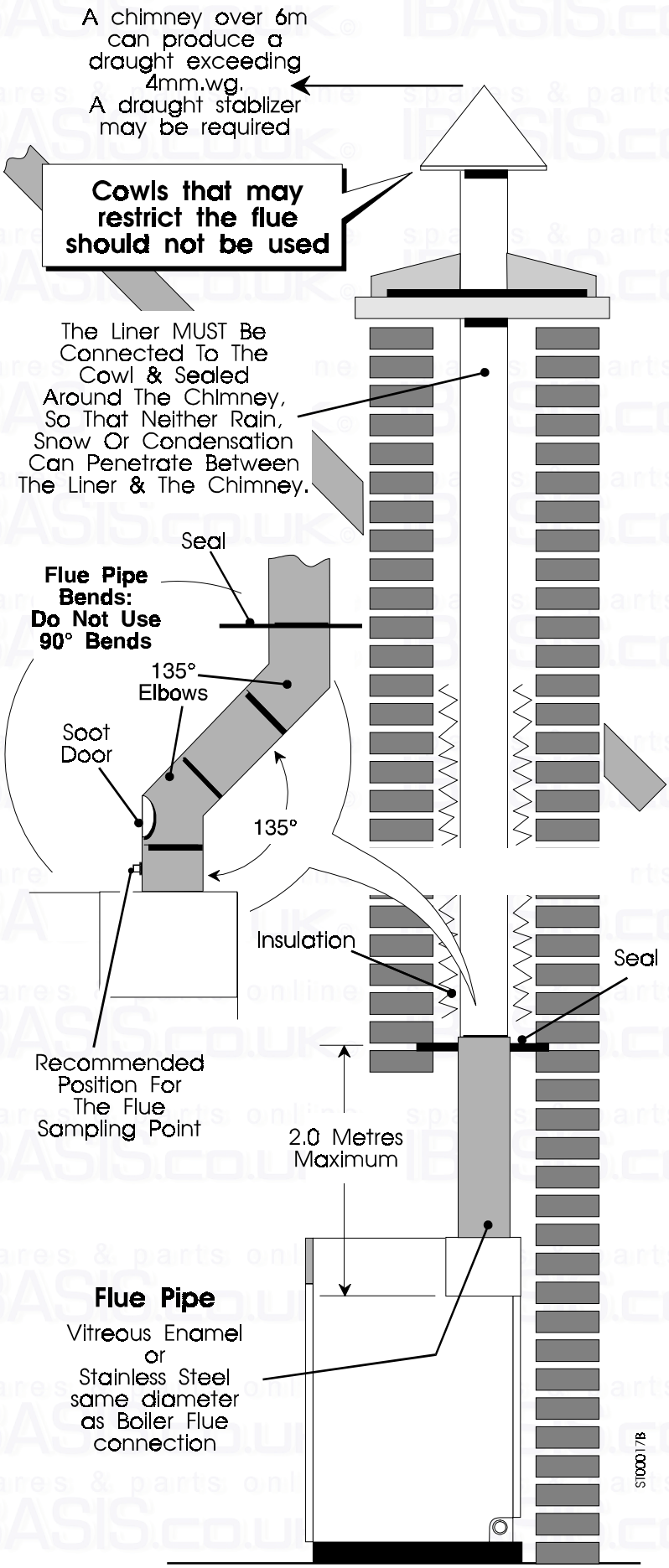

Fig. 5

central heating systems for domestic premises.

- BS 7074: Pt.1:1989 Application, selection and installation of expansion vessels and ancillary equipment for sealed systems.
- BS 7671 Requirements for electrical installations. IEE wiring regulations 16th edition.
- Control of pollution (oil) regulations.
- Local water undertakings bye-laws.

Chimney

Every Potterton boiler has a very high efficiency and care must be taken to ensure that the chimney is suitable.

Chimneys may have been already built and completed before a choice of appliance has been made. Alternatively, chimneys may be installed to suit the particular appliance chosen.

A factory made insulated chimney complying with the requirement of BS4543 may be considered as an alternative to a conventional structural chimney for both new and existing buildings. A further alternative may be a suitable form of insulated flue pipe normally positioned on a wall outside a building.

Capacity

The chimney or flue must have a cross-sectional area throughout its whole length, that is at least the area of the flue outlet of the boiler and must be sealed at the boiler with fire clay or other suitable compounds. As few bends as possible should be used and, where necessary, 135° bends are recommended.

Height

The chimney or flue should be of sufficient height to provide a minimum draught of 0.035" w.g. measured above the boiler. Draught conditions that are excessive i.e. above 0.16" w.g. due to chimney height or location, should be controlled by means of a draught stabiliser fitted to the chimney.

External Flues

All external flues of metal or other materials should have cleaning facilities, and be well insulated to maintain the correct draught conditions.

Internal Flues

The exposed flue pipe between the boiler flue off-take and the chimney proper (either internally or externally) must not be of asbestos. Vitreous Cast Iron, Steel or similar materials should be used.

Note: When installing the boiler into a chimney previously fitted with a liner, the liner must be replaced and made weather-tight.

Choice of Materials

The materials used in the construction of chimneys and flues must always be suitable for the application. Their construction must be durable, non-combustible, able to resist the range of temperatures expected; and also resistant to external as well as internal corrosion. This is particularly important due to the Statesman's high thermal efficiency, where correct choice of materials will prevent problems likely to be caused by condensation.

If you are in any doubt, you should seek advice of a reputable manufacturer of chimneys, names should be available from your local stockist.

Combustion & Ventilation Air for Open Flue Oil Fired Boilers

General. A sufficient permanent air supply to an appliance will be required.

a) For proper combustion of fuel and effective discharge of combustion products to the open air.
b) For the ventilation of any confined space in which an appliance is installed to prevent overheating of the appliance and any equipment in and near the appliance.
c) For the satisfactory operation of any draught break or stabilizer which may be fitted.

Air for Combustion

This requirement will be satisfied if the room or space in which the appliance is installed has an opening or duct which is designed to allow the passage of air at all times equivalent, in total free area, to 550 mm^2/kW (2.5 in^2 per 10,000 btu's) of the appliance rating.

If the space containing the appliance has an extract ventilation fan fitted, the supply of air should be such that the operation of the appliance and flue is unaffected when the windows and doors are closed and the extractor fan is running.

Air for Ventilation

For an appliance in a confined space, care shall be taken to provide air for ventilation. A working guide to the minimum free area of openings to be provided in addition to that for combustion air is as follows:

a) Where the air is taken from a heated space, 1100 mm^2/kW at high level and 1100 mm^2/kW (5.0 ins^2 per 10,000 Btu's) at low level.
b) Where the air is taken from outside, 550 mm^2/kW at both high level and low level (2.5 in^2 per 10,000 btu's) at low level.

The above requirements are essential, in particular for appliances which are installed with a low level discharge. The warranty for such boilers could be affected if proper free air requirements are not provided.

FREE AREAS OF GRILLES ARE MM^2 PER KW **OF APPLIANCE RATING (OUTPUT)**

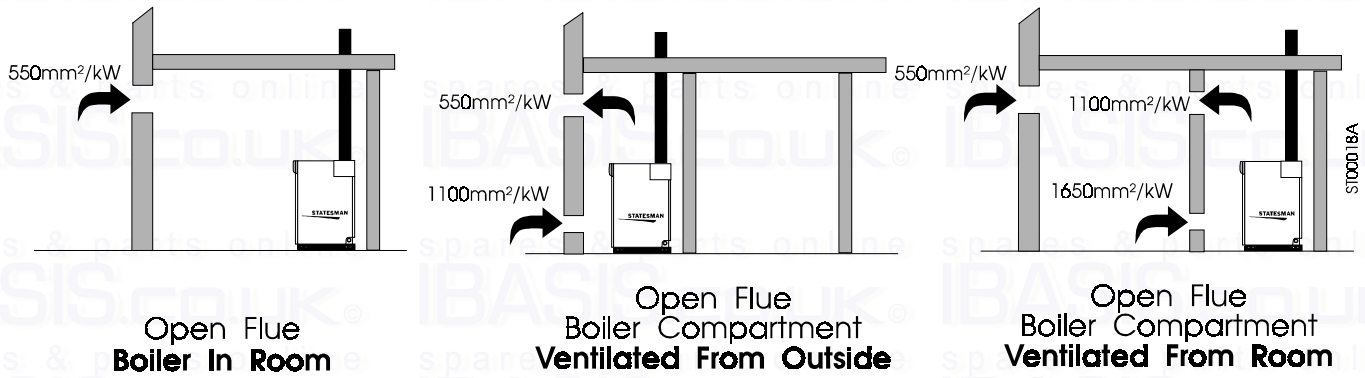

Fig. 6

Extract Fans

If the room in which the appliance is located also has an extract fan the performance of the appliance must be unaffected when the fan is running with all doors and windows closed.

Draught Breaks

When an appliance with a draught break is fitted in a room add 550mm²/kW to the free area of the combustion air inlet.

When an appliance with a draught break in a compartment which is ventilated as noted above, no additional allowance is required.

Combustion & Ventilation Air for Balanced Flue Oil Fired Boilers

FREE AREAS OF GRILLES ARE mm² PER/KW **OF APPLIANCE RATING (OUTPUT)**

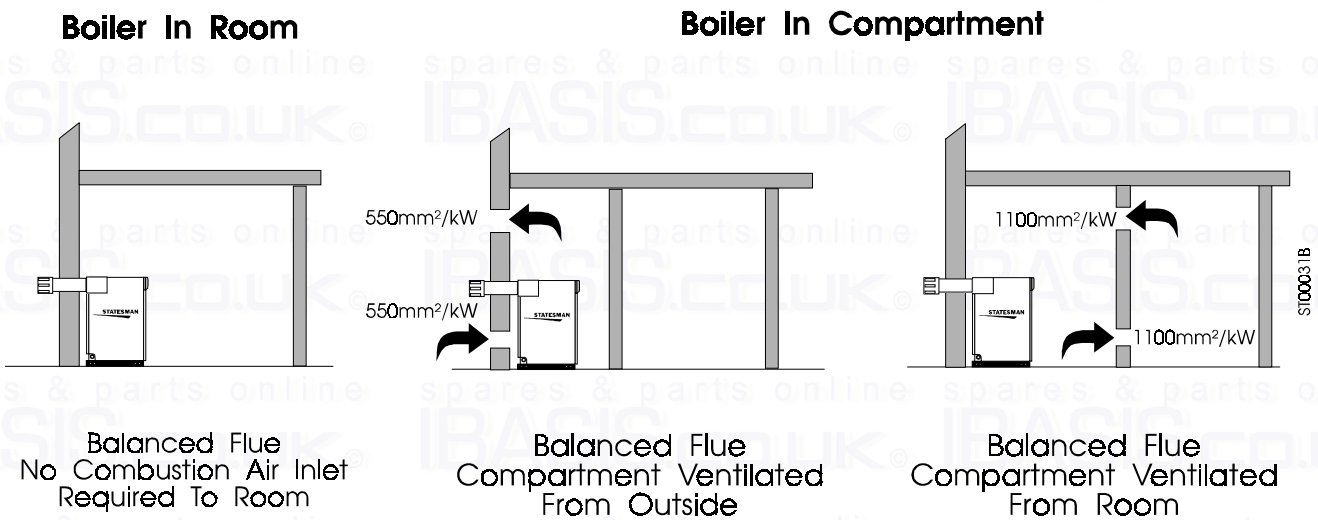

Fig. 7

Balanced Flue

Boilers fitted with balanced flues must only fire Kerosine and will not operate satisfactorily unless the free air requirements have been satisfied.

Consideration should be given to the texture of the wall onto which the low level flue terminal is fixed. As with all heat emitting devices the warm air from the terminal will encourage the accumulation of dirt which will at some time require removal with a detergent based cleaning fluid.

Clearances are shown on the next page.

Clearances Required Around Balanced and Low Level Discharge Flues Fitted to Oil Fired Boilers

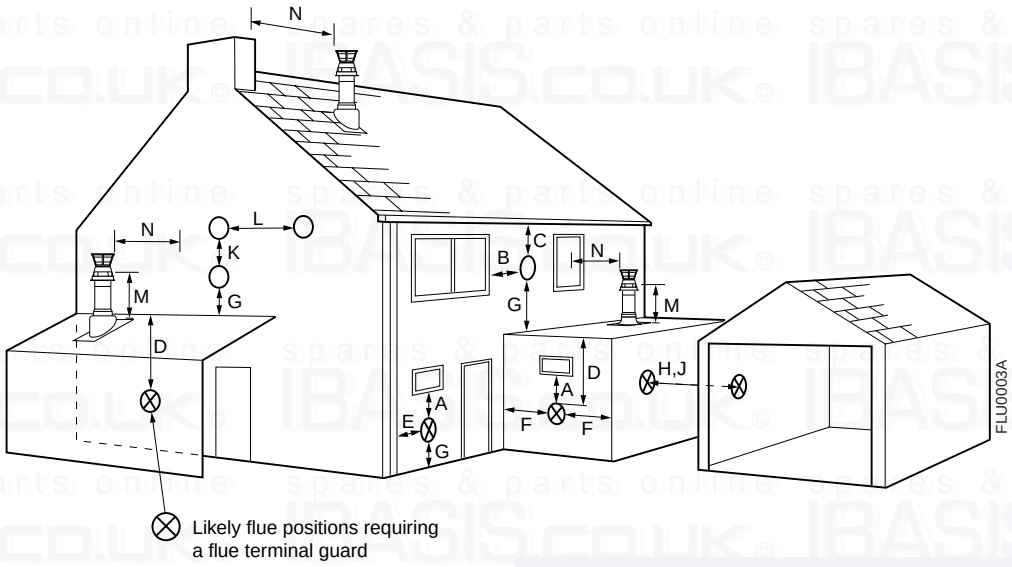

Fig. 8

Where the terminal is within 1 metre of any plastic material, such material should be protected from the effects of combustion products.

There are additional general requirements in most Regulations and Standards that the flue must be positioned so that it does not cause a nuisance and permits the dispersal of combustion products.

If the terminal is less than 2 metres above ground level, balcony or place to which any person has access, the terminal must be protected by a guard, (Flue Guard Part No. 26000045).

Table 3

Terminal Position with Minimum Distance (mm)		
A	Directly below an opening, air brick, opening window etc	600
B	Horizontally to an opening, air brick, opening window etc	600
C	Below a plastic/painted gutter, drainage pipe or eaves, with protection	75
D	Below a balcony or a plastic/painted gutter, drainage pipe or eaves	600
E	From vertical sanitary pipework	300
F	From an internal or external corner	300
G	Above ground or balcony level	300
H	From a surface facing a terminal	600
J	From a terminal facing the terminal	1200
K	Vertically from a terminal on the same wall	1500
L	Horizontally from a terminal on the same wall	750
M	From the intersection with the roof to the air intake on the terminal	300
N	From the terminal to a wall or chimney	1000

Note: The distance from a appliance terminal installed parallel to a boundary may not be less than 300 mm in accordance with the diagram below.

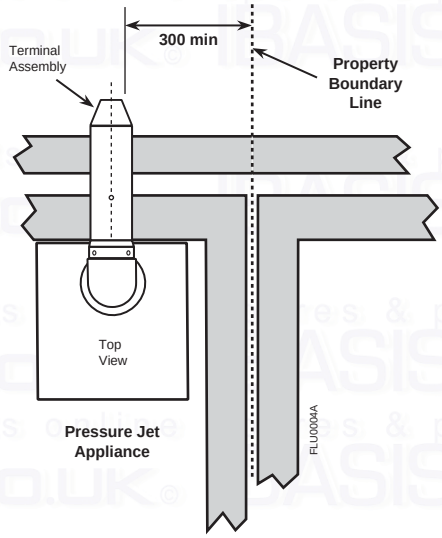

Tank Support

Steel tanks are normally supported on masonry piers. These have to maintain the tank at a sufficient height to enable access to be gained for painting.

Requirements for Tank Accommodation

Reference should be made to the relevant building regulations, bye-laws, etc. in order to achieve a satisfactory degree of safety in relation to the methods of protection. Underground tanks are also referred to in BS 5410:Pt.1. BS 5410:Pt.2 gives more detailed guidance on the burying of steel tanks.

The Scottish Building Standard requirements for underground tanks are the same as those of BS 5410:Pt.1.

Methods of Tank Protection

It is considered unlikely that a fire will originate from the stored oil and it is the purpose of these recommendations to ensure that a fire which may originate from a building or other external source is not transmitted to the tank contents.

Adequate safety may be achieved in a number of ways, for example:

a) Protecting the tank by a physical barrier or isolating the tank by sufficient space;

b) Enclosing the tank by non-combustible fire resisting construction; i.e., putting the tank underground.

Oil Storage Tank & Supply Installations

Oil Tank Types

Steel Tanks

Steel tanks should be constructed so as to comply with BS 799:Pt.5:1987. Galvanised steel pipework or valves must never be used for oil storage or supply systems.

Plastic Tanks

Tanks made from plastics material are now available.

Oil should never be stored in translucent plastic containers.

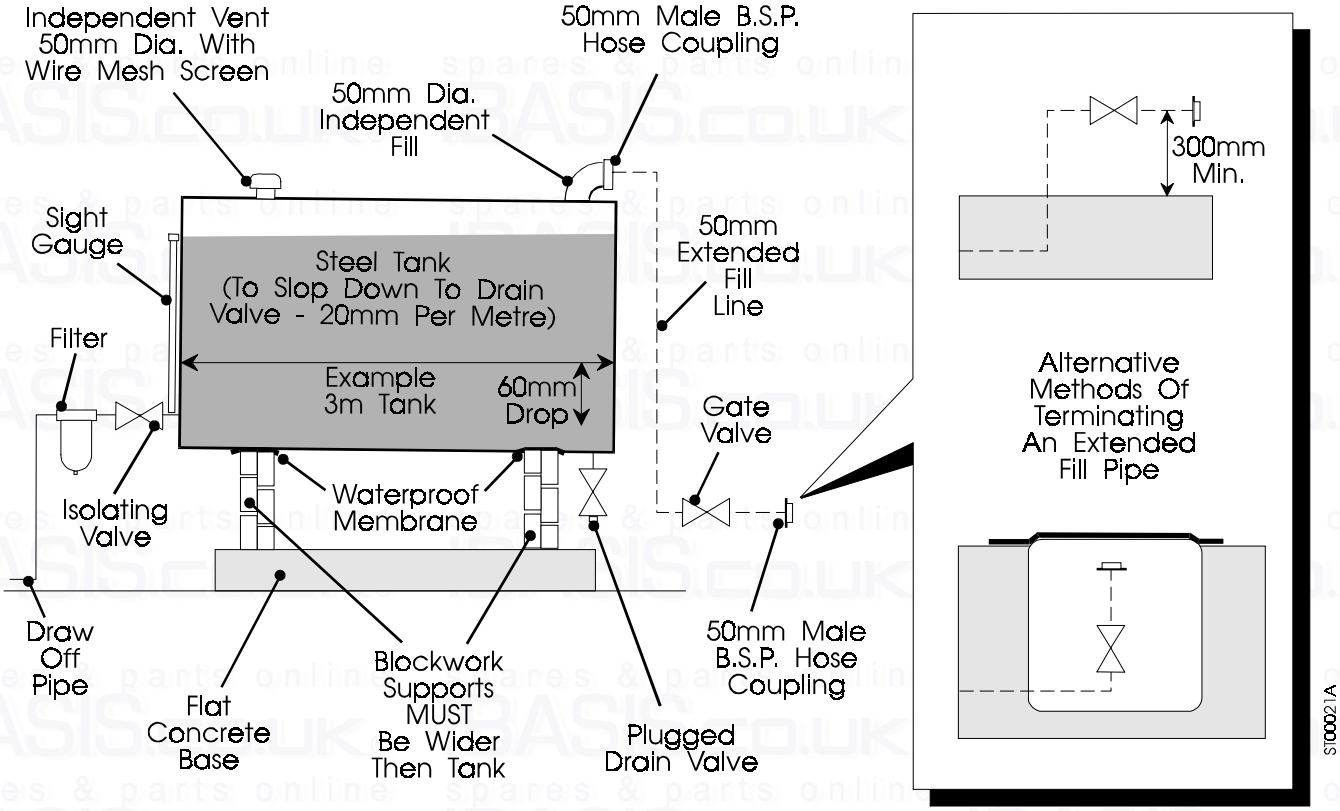

Fig. 9

Storage Requirements and Tank Sizes

Tanks are available in a wide variety of sizes and capacities. For boilers of up to 13 kW (45,000 Btu/h) tanks with a capacity of 1200 litres (250 gallons) are satisfactory. Above that size of boiler a larger capacity tank should be considered.

Some typical tank sizes and capacities are noted below

Length Metres	Width Metres	Height Metres	Capacity Litres
Steel Tanks			
1.52	1.22	0.61	1130
1.83	0.61	1.22	1360
1.83	1.22	1.22	2700
2.44	1.22	1.22	3650
Polythene Tanks			
2.03	0.69	1.36	1150
1.37	1.06	1.25	1250
2.02	1.36	1.36	2500

Tank Fittings

TANKS REQUIRE TO BE PROVIDED WITH THE FOLLOWING FITTINGS:

Fill Pipe

A 50 mm diameter black steel fill pipe terminating with a 50 mm male BSP thread hose coupling connection and non ferrous screw cap and chain.

Extended Fill Pipe

Extended fill pipes can be used when the location of the tank is such that access for filling would be difficult for a delivery tanker carrying 30 metres of hose. Extended fill lines must be run in 50 mm diameter black steel tube with proper support. They must be arranged so as to be self draining, preferably in to the tank. Where tanks are located lower than their filling connection care must be taken to ensure that the pressure head of oil applied during filling is not excessive.
Where the use of an extended fill pipe means that the delivery driver cannot see the oil tank, an audible alarm should be fitted to indicate that the tank is nearly full.

Vent Pipe

A separate vent pipe with an internal diameter at least equal to that of the fill pipe must be fitted. The open end of the vent is fitted with a return bend and an open wire mesh balloon.

A mushroom type vent may be fitted provided its free area is at least equal to the cross sectional area of the fill pipe. The vent should normally rise no higher than 600 mm above the top of the tank.

If the vent pipe rises more than 600 mm above the tank a pressure relief outlet must be provided in the vent at the 600 mm level. This is normally a horizontal branch off the vent with a flap at its end. This is hinged at the top and fitted so that it is normally closed but will open easily if oil rises up to the level of the branch.

Isolating Valve

A valve is fitted in the tank outlet in an accessible position so that the oil supply to the burner can be shut off if required.

The valve must be of a type suitable for use with oil. The outlet from the tank must be above the level of the bottom of the tank to prevent water and sediment being drawn in to the oil supply pipe.

Drain Valve

In order to enable the sediment and water to be removed from the tank a gate valve and plug are fitted in the bottom plate of the tank.

Contents Gauge

The most commonly used gauge is the sight tube type. These are simple and have some advantages for domestic use. An isolating valve must always be provided and is often incorporated in the gauge connection. The top of the gauge must be fixed to the top of the tank and provided with a cap to protect the oil from foreign matter. Integral gauges using internal floats are also available. These are less likely than sight gauges to give rise to leaks.

Overfill Alarms

Audible alarms can be fitted in tanks to indicate that they are nearly full. These are an essential requirement when the delivery point and tanker access are remote from each other.

Oil Supply Pipe Layout

Oil can be run from the storage tank to the burner by a single pipe gravity flow if there is a sufficient height difference between the bottom of the tank and the burner. Otherwise a two pipe system is needed.

a) Single Pipe Supply Systems - Tanks serving

appliances with pressure jet burners by means of a single pipe need to be positioned so that they will apply the 300 mm minimum required head of oil to the burner when the fuel level is at its lowest point. The fittings and layout are shown in Fig. 10.

Figures for Kerosine Only

Pipe Dia I/D in mm.	8	10
'A' Metres	Length in Metres	
0.5	10	20
1.0	20	40
1.5	40	80
2.0	60	100

Table 4

b) Two Pipe Supply Systems - If the tank base is below the level at which gravity feed to the burner can be maintained, a two pipe oil supply system can be adopted. The fittings and layout are shown in Fig. 11. The non return valve in the supply line of the two pipe system is required to prevent oil running back from the burner and un-priming the oil pump. The non return valve in the return line is only required if the top of the tank is above the burner. Its purpose is to prevent oil running back through the burner during maintenance.

Figures for Kerosine Only

Pipe Dia I/D in mm.	8	10
'B' Metres	Length in Metres	
0.0	100	100
0.5	100	100
1.0	100	100
1.5	100	100
2.0	100	100
2.5	80	100
3.0	55	100
3.5	5	90

Table 5

Oil Line De-Aerating Devices

These may be used in conjunction with Statesman boilers. It is recommended that they are fitted outside the dwelling. It is not permissible to fit plastic components in fuel lines within dwellings or boiler rooms. The manufacturers instructions should always be followed, particularly when the oil tank may be situated at low level. The fittings and layout are shown in Fig. 10.

Oil Filter

An oil filter should always be fitted in the oil supply line. Facilities should be provided to enable it to be serviced without draining down the oil supply system.

Fire Valves

A fire valve is an essential part of the oil supply system. It should be capable of cutting off the flow of oil outside the building in the event of a fire starting up within the boiler.
The valve should be located just outside the building at the point where the oil supply line enters. It must be activated by a remote sensor located over the burner but in a position clear of any direct radiation or excessive heat. Weight operated valves connected to a sensor by wires and pulleys have been used for this purpose. It is preferable, however, to use a valve with a capillary connection between its sensor and the oil cut off mechanism. The use of fusible head isolating valves is not recommended.

It is essential that these devices conform to current Standards and Regulations. When they are installed, their manufacturers recommendations must be adhered to.

Copper Tube and Fittings

Copper tube for oil lines should be to BS.2871:Part 1: Table Y. It can be obtained in coil form or half hard for use with bending machines. This pipe can be obtained with protective plastic sheathing applied. Copper tubes for oil lines must not be soldered.
Note: Galvanised pipes must not be used.

Fittings for copper pipe should be of the flared manipulative type to BS.864:Part 2:1983. Steel pipe should be to BS.1387:1985. Fittings for steel pipe should be to BS.1740:Part 1:197271 with taper threads.

Floor Temperatures

The thermal insulation provided in the boiler base ensures the floor temperatures is kept below 80 °C and as such, a non combustible hearth is not required. The floor should always be smooth and flat and capable of supporting the installed weight of the boiler, including its water content. If constructed by a material which is softened by oil, it is advisable to install an additional metal tray underneath the boiler for protection against accidental damage.

The Heating System

When fitting into an existing installation, the system should be chemically cleaned (if practical) before installing the boiler. A suitable inhibitor should be added to keep it in good condition.

Single Pipe Supply System

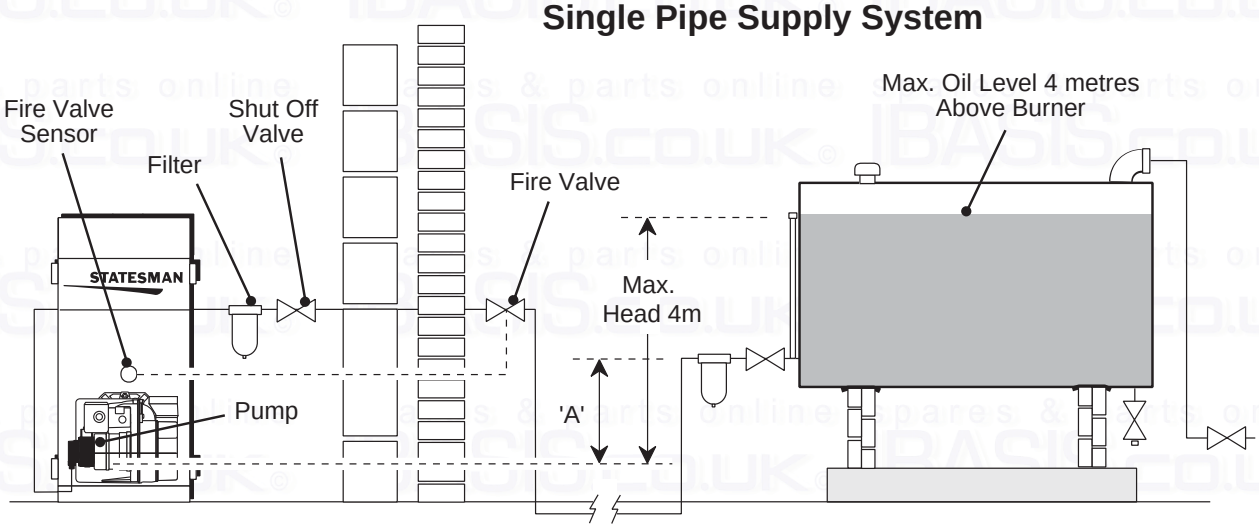

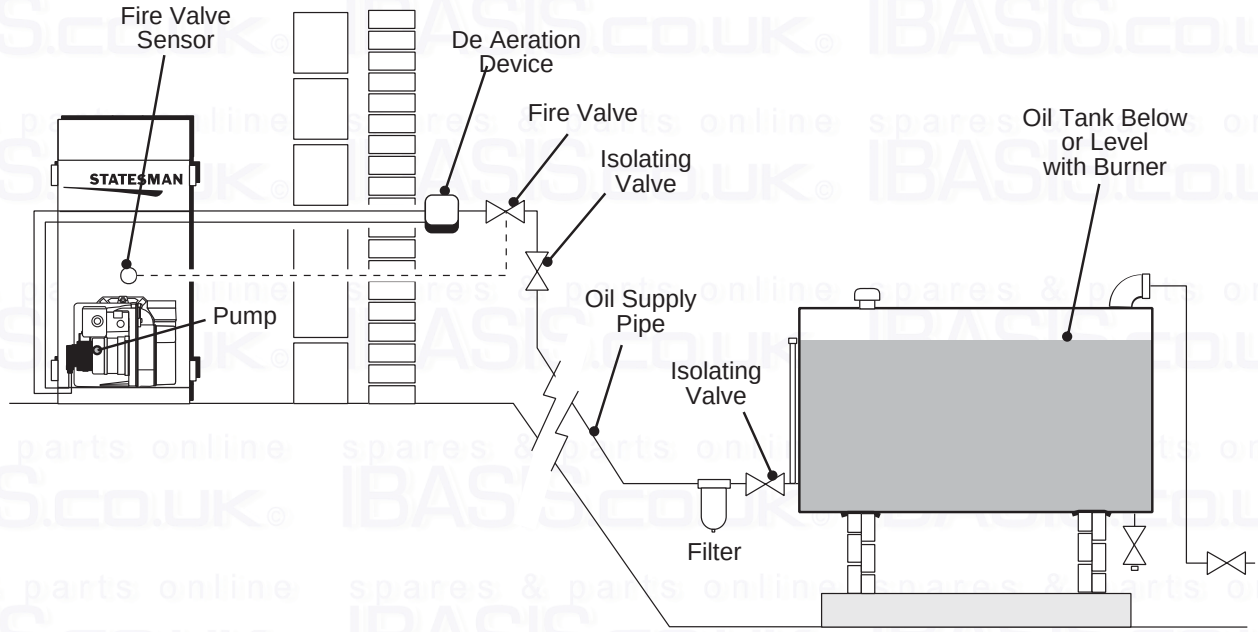

Fig. 10

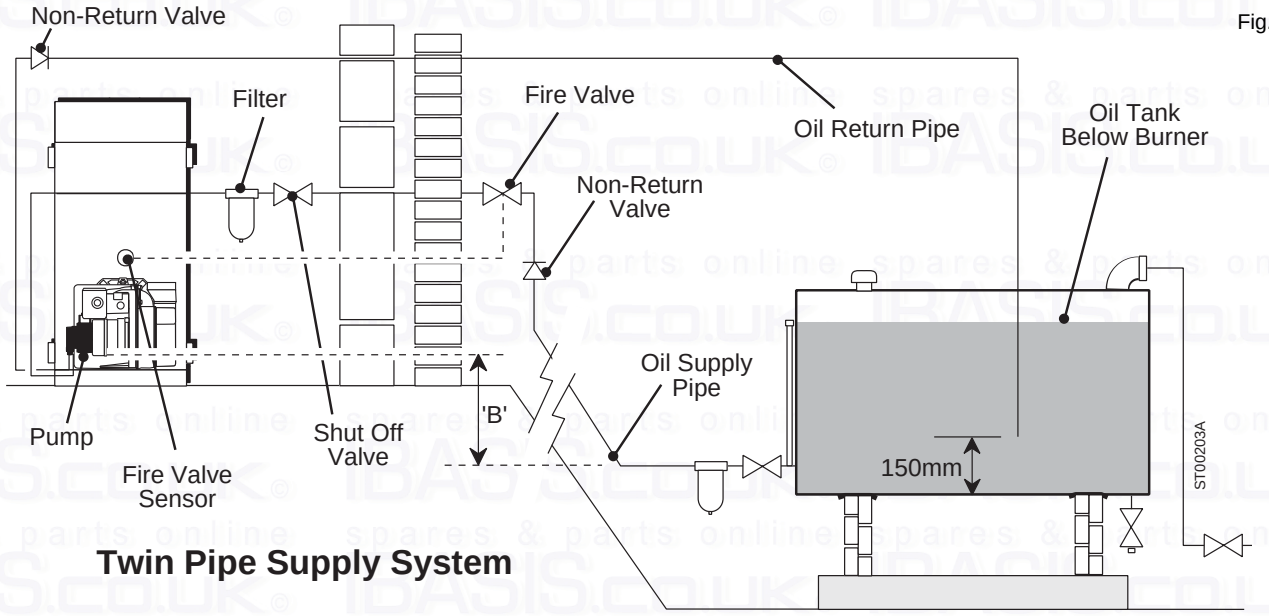

Twin Pipe Supply System

Fig. 11

3 - Installation & Commissioning

Low Level Horizontal - Kits 1 & 2 With Extensions

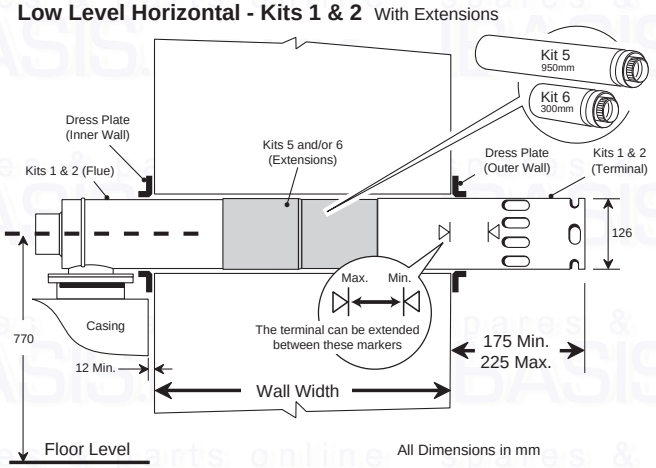

All Dimensions in mm

Low Level Rear
ALL Models

Wall Width	Kit Numbers
100 - 275	1
225 - 600	2
600 - 900	2 + 6
900 - 1,200	2 + 6 + 6
1,200 - 1,550	2 + 5
1,550 - 1,850	2 + 5 + 6

Low Level Left/Right
45/50 50/70 Models

Wall Width	Kit Numbers
100 - 250	1
125 - 500	2
500 - 800	2 + 6
800 - 1,100	2 + 6 + 6
1,100 - 1,450	2 + 5
1,450 - 1,750	2 + 5 + 6

Low Level Left/Right
70/90 90/110

Wall Width	Kit Numbers
100 - 200	1
100 - 450	2
450 - 750	2 + 6
750 - 1,050	2 + 6 + 6
1,050 - 1,400	2 + 5
1,400 - 1,700	2 + 5 + 6

All Dimensions in
Tables ± 5mm

Low Level Horizontal - Kits 7, 8 & 12 With Extensions

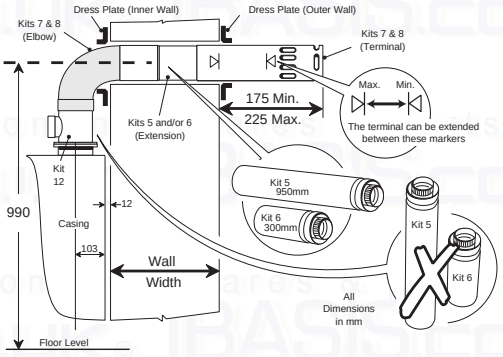

Low Level Rear
ALL Models

Wall Width	Kit Numbers
100 - 275	12 + 7
225 - 525	12 + 8
525 - 825	12 + 8 + 6
825 - 1,125	12 + 8 + 6 + 6
1,125 - 1,225	12 + 7 + 5
1,225 - 1,475	12 + 8 + 5
1,475 - 1,775	12 + 8 + 5 + 6

Low Level Left/Right
45/50 50/70 Models

Wall Width	Kit Numbers
100 - 175	12 + 7
125 - 425	12 + 8
425 - 725	12 + 8 + 6
725 - 1,025	12 + 8 + 6 + 6
1,025 - 1,125	12 + 7 + 5
1,125 - 1,375	12 + 8 + 5
1,375 - 1,675	12 + 8 + 5 + 6

Low Level Left/Right
70/90, 90/110

Wall Width	Kit Numbers
100 - 125	12 + 7
100 - 375	12 + 8
375 - 675	12 + 8 + 6
675 - 975	12 + 8 + 6 + 6
975 - 1,075	12 + 7 + 5
1,075 - 1,325	12 + 8 + 5
1,325 - 1,625	12 + 8 + 5 + 6

All Dimensions in Tables ± 5mm

High Level Vertical - Kits 3, 4, 9 & 10 With Extensions

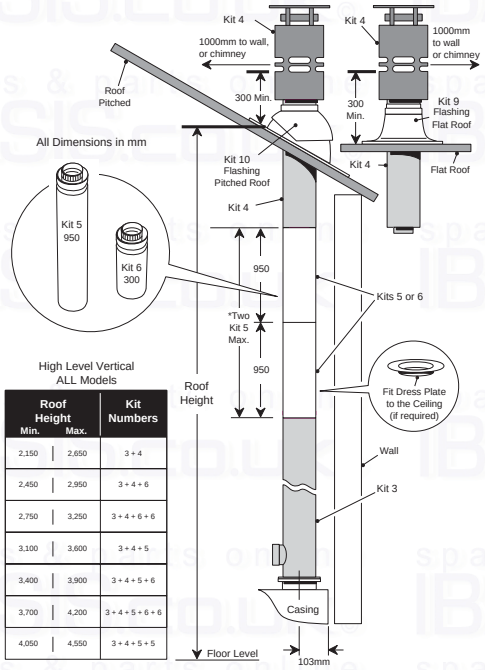

High Level Vertical
ALL Models

Roof Height Min.	Roof Height Max.	Kit Numbers
2,150	2,650	3 + 4
2,450	2,950	3 + 4 + 6
2,750	3,250	3 + 4 + 6 + 6
3,100	3,600	3 + 4 + 5
3,400	3,900	3 + 4 + 5 + 6
3,700	4,200	3 + 4 + 5 + 6 + 6
4,050	4,550	3 + 4 + 5 + 5

All Dimensions in
Tables ± 5mm

High Level Horizontal - Kits 3, 7 & 8 With Extensions

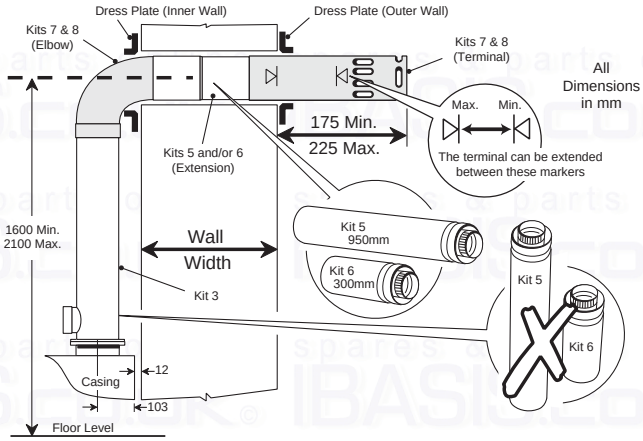

High Level Rear
ALL Models

Wall Width	Kit Numbers
100 - 275	3 + 7
225 - 525	3 + 8
525 - 825	3 + 8 + 6
825 - 1,125	3 + 8 + 6 + 6
1,125 - 1,225	3 + 7 + 5
1,225 - 1,475	3 + 8 + 5

High Level Left/Right
45/50 50/70 Models

Wall Width	Kit Numbers
100 - 175	3 + 7
125 - 425	3 + 8
425 - 725	3 + 8 + 6
725 - 1,025	3 + 8 + 6 + 6
1,025 - 1,125	3 + 7 + 5
1,125 - 1,375	3 + 8 + 5

High Level Left/Right
70/90, 90/110

Wall Width	Kit Numbers
100 - 125	3 + 7
100 - 375	3 + 8
375 - 675	3 + 8 + 6
675 - 975	3 + 8 + 6 + 6
975 - 1,075	3 + 7 + 5
1,075 - 1,325	3 + 8 + 5

ST00270A

All Dimensions in
Tables ± 5mm

Fig. 12

Installation & Commissioning

It is possible to install the boiler without removing the casing sides but care should be taken not to damage the panels when connecting the water pipes.

Fitting a Balanced Flue

Refer to the Instructions supplied with the flue.

Fitting a Conventional Flue

Local Building Regulations and Bye Laws should be consulted for details of the chimney, use a 135° bend. 90° bends must not be used, due to their flow resistance and baffling characteristics. Ensure that flue pipe entering a brick chimney is cut off flush with the inside surface or at a small inclined angle to prevent droppings entering the flue connection. Provision for cleaning the chimney should be made below the flue entry. Refer also to Section 2 of these Instructions.

a) Unpack the boiler.
b) Select the desired oil feed position and remove the appropriate knockout in the base using a suitable drift.
c) Position boiler.
d) Lift off top casing panel.
e) Carefully remove knockout panel in top casing panel using gentle manipulation.
f) Seal flue pipe to boiler with fire cement.
g) Re-fit top casing panel.

Connecting the Electricity Supply

Electrical Connections:

All electrical wiring must be carried out by a qualified electrician in accordance with current I.E.E. Regulations and any Local Regulations that may apply.

Earthing: It is essential that the appliance is earthed.

Cable Entry: The cable should be heat resisting and routed either along the top side of the casing or run from the bottom side through the knock out holes in the base tray, making sure they do not come in contact with the heat exchanger.

Fusing: The mains electrical supply should be taken from a double pole isolating switch (fused 5 amp) situated near the boiler.

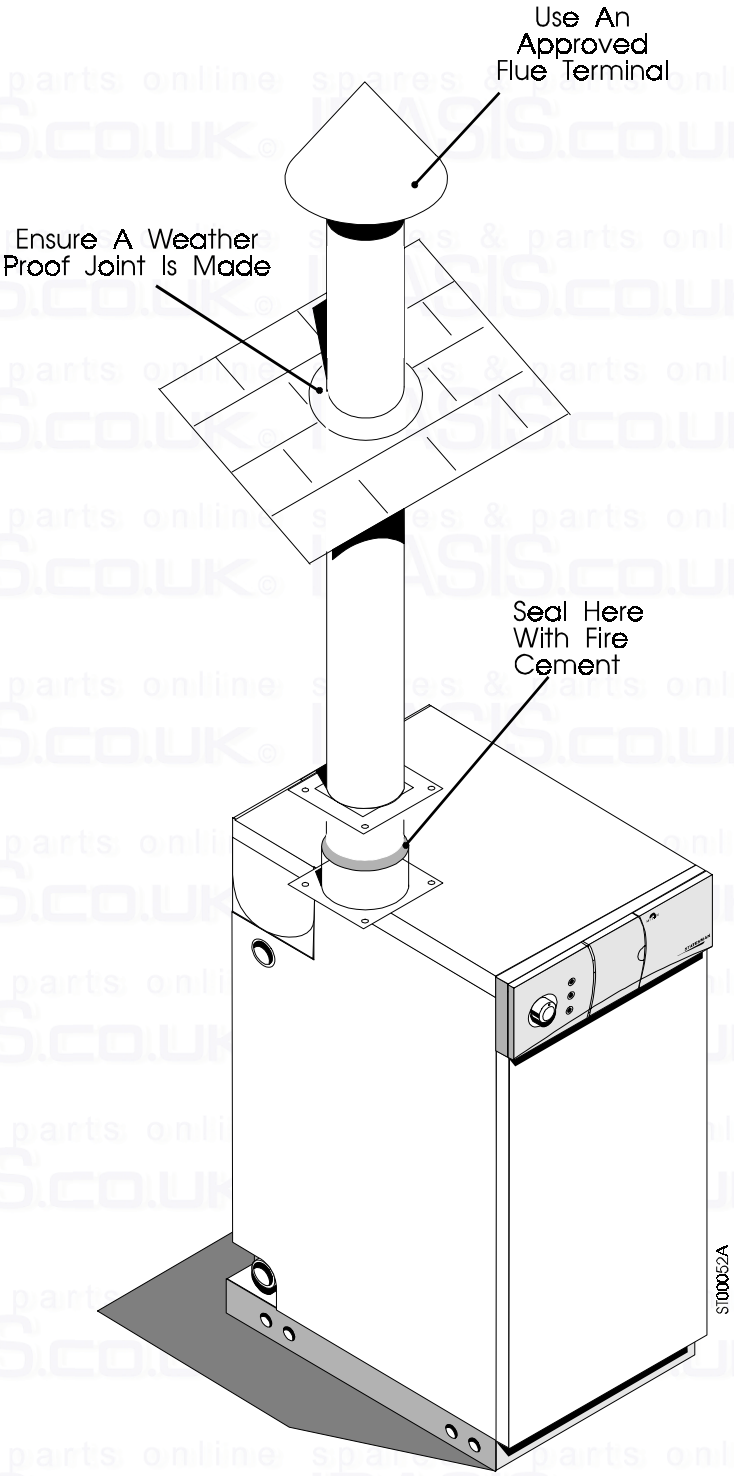

Fig. 13

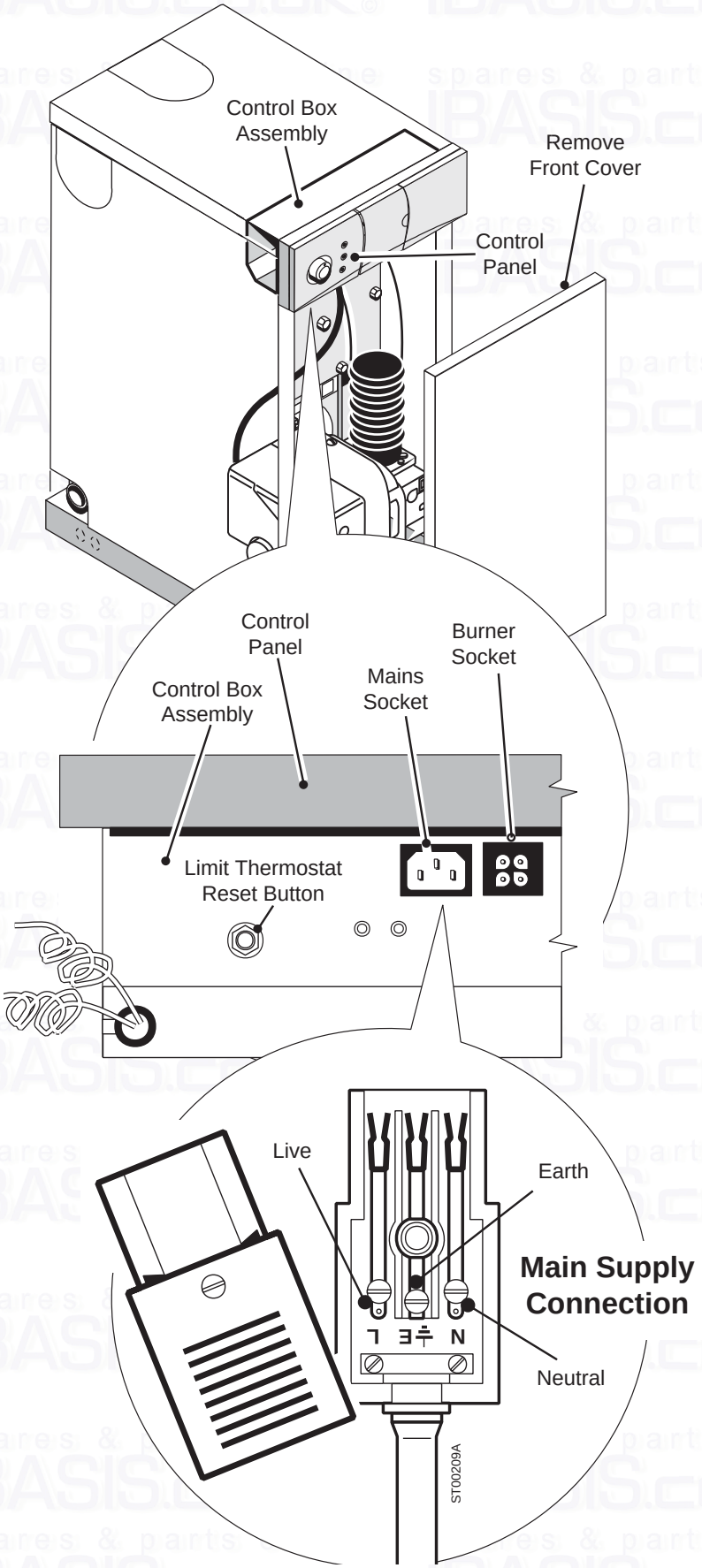

Fig. 14

Wiring Diagrams: Refer to wiring diagrams in Section 1 of these Instructions. The mains inlet plug is provided in the bag of fittings supplied.

To wire in external controls, open the door on the right hand side of the facia panel, to expose a blanking plate .

Remove the blanking plate you will then see a plug-in terminal block, remove the appropriate part, run wires through hole in panel, wire into plug refit plug into socket, pull through excess wires then refit blanking plate.

Facia Door

A plastic facia door is incorporated into the control panel. This door is designed to come off if any undue pressure is exerted on it when open but can easily be snapped back into place. It may however become detached if the appliance has been handled roughly during transit. If you find the door is missing when opening the carton, check to see if it is amongst the packaging.

Fuel Pipes

Refer to Section 2, Figs. 9, 10, 11 plus Tables 4 and 5.

Before connecting a flexible hose to the burner draw off a small quantity of oil, approximately two pints, into a suitable container, check that fuel is clean.

The flexible fuel pipe should be connected to the burner and the other end to the fuel line via the isolation valve (supplied). At this stage the connection should be left finger-tight as it will have to be disconnected before the burner is started in order to vent air from the line after the fuel has been turned on. Couple a filter to the rigid pipe and run pipework from the inlet of the filter to the tank. The filter should not be installed inside the boiler.

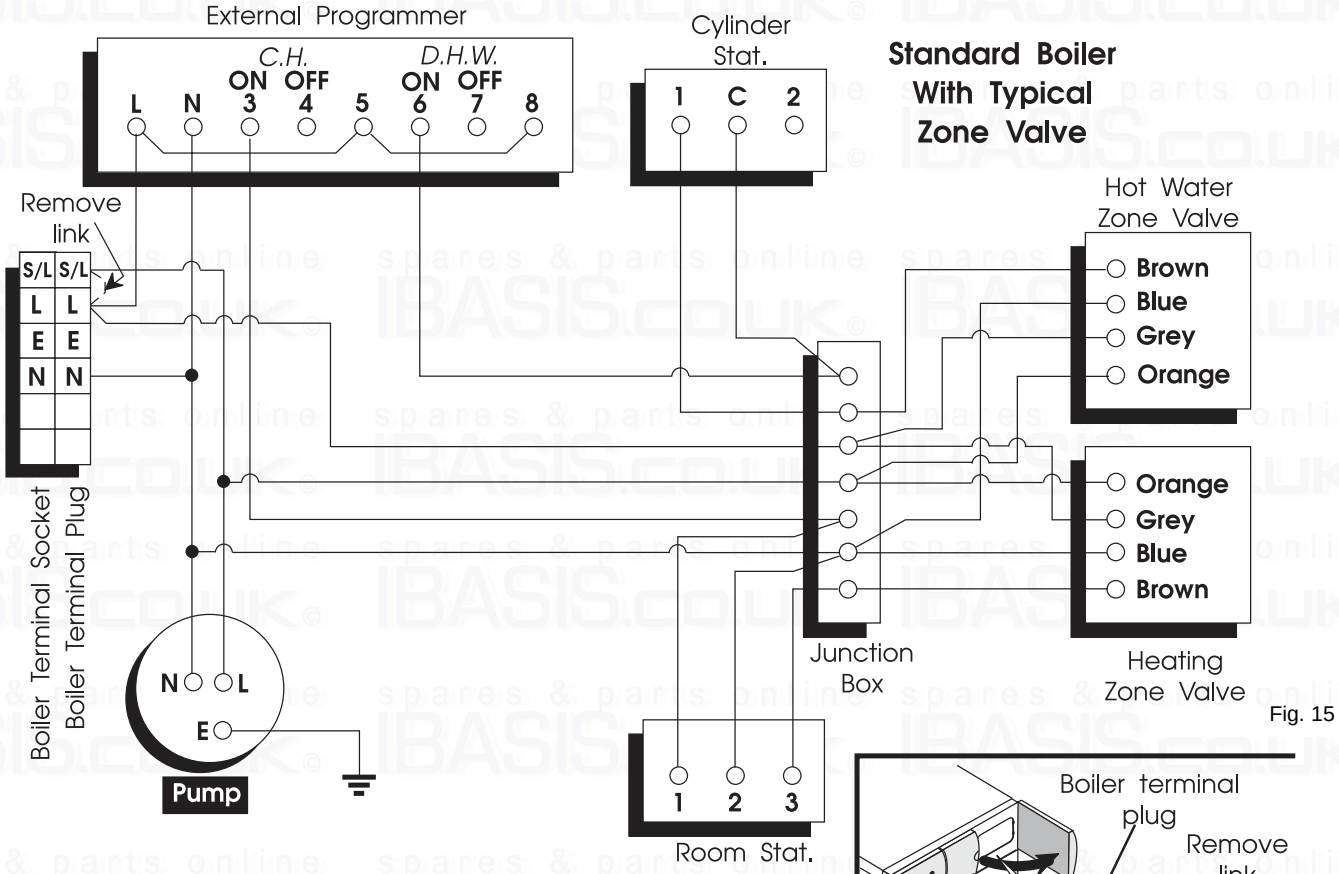
External Programmer
C.H.
ON OFF
D.H.W.
ON OFF
L N 3 4 5 6 7 8
Cylinder Stat.
1 C 2
Standard Boiler With Typical Zone Valve
Remove link
S/L S/L
L L
E E
N N
Boiler Terminal Socket
Boiler Terminal Plug
Hot Water Zone Valve
Brown
Blue
Grey
Orange
Orange
Grey
Blue
Brown
Junction Box
Heating Zone Valve
N L
E
Pump
1 2 3
Room Stat.

Fig. 15

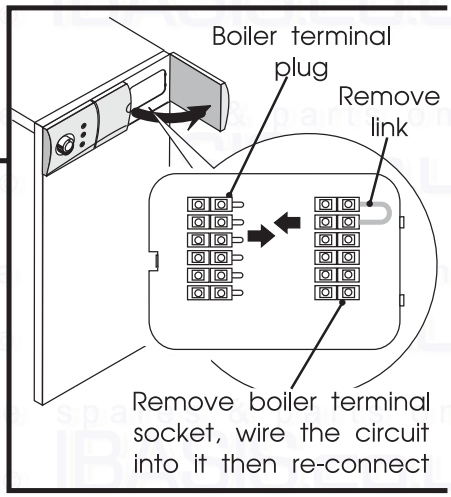
Boiler terminal plug
Remove link
Remove boiler terminal socket, wire the circuit into it then re-connect

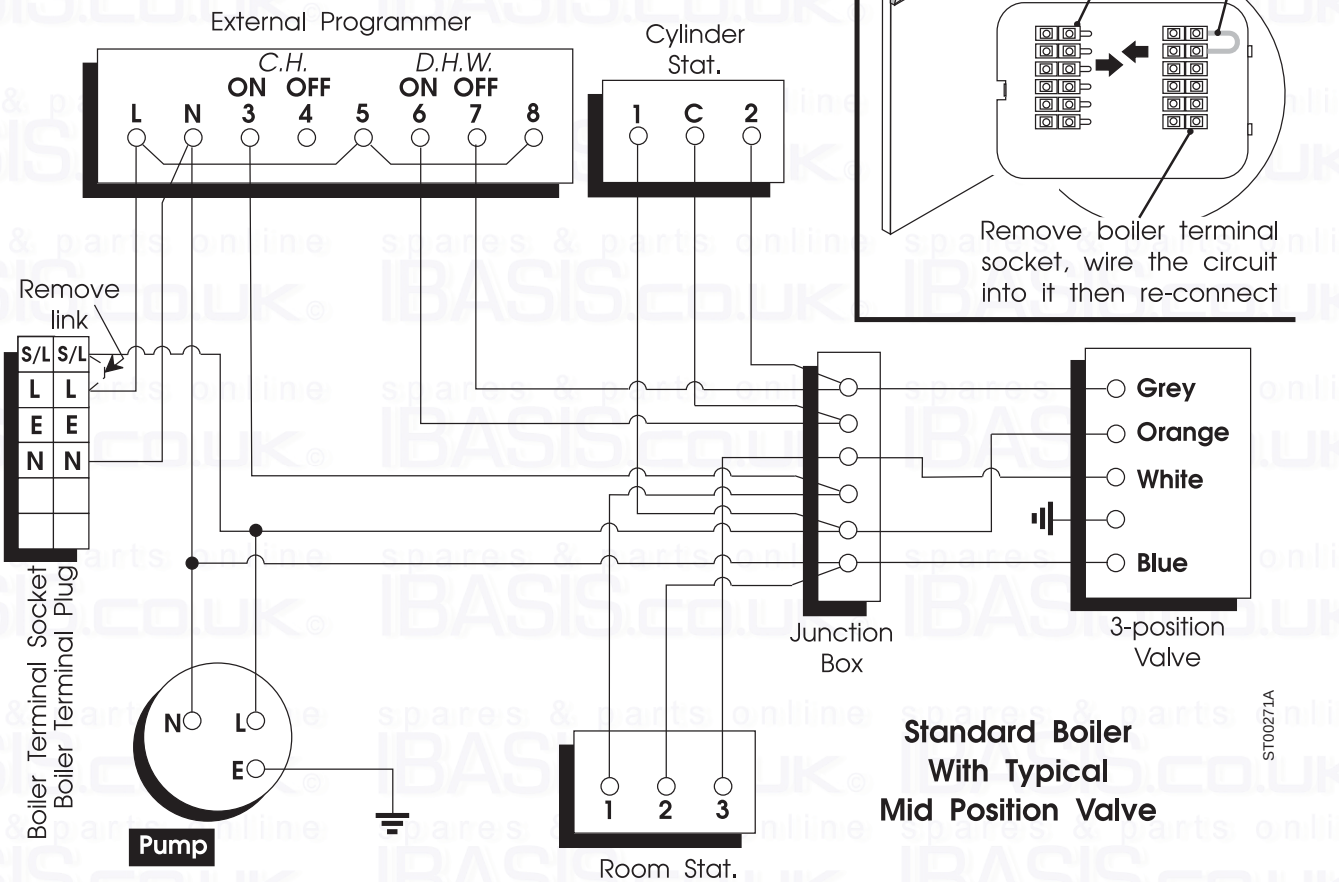
External Programmer
C.H.
ON OFF
D.H.W.
ON OFF
L N 3 4 5 6 7 8
Cylinder Stat.
1 C 2
Remove link
S/L S/L
L L
E E
N N
Boiler Terminal Socket
Boiler Terminal Plug
Grey
Orange
White
Blue
Junction Box
3-position Valve
N L
E
Pump
1 2 3
Room Stat.
Standard Boiler With Typical Mid Position Valve
ST00271A

Fig. 16

An Isolation Valve should be placed on the tank side of the filter, so that the oil supply can be isolated when servicing is required.

Ensure that the filter is positioned correctly and that it is easily accessible with sufficient clearance below it for cleaning or replacing the filter element.

It is vital that all joints are completely oil-tight, leaks may cause air locks in the fuel supply pipe, and will almost certainly lead to complaints of oil odour.

Fit the fire valve in the oil line, as detailed in Section 2, Page 16.

Where the tank position provides a gravity flow of oil to the burner, THE SINGLE PIPE SYSTEM should be used. The difference in “head”, i.e., the distance vertically between the pump and the outlet of the tank, dictates the maximum length of oil supply pipe, including horizontal and vertical runs (see Section 2).

When the tank outlet is below the level of the burner fuel pump, THE TWO PIPE SYSTEM MUST BE USED (See Fig. 11). Here a return line is piped from the pump back to the tank, finishing at least 150 mm above the bottom. This section of pipe must end at the same level in the tank as the suction as to prevent loss of prime.

The ends of the two pipes should be well separated so that no sludge is disturbed by the return, and will not be pulled into the suction pipe. An elbow at the end of the return will ensure that the discharge is away from the suction. A non-return valve should be fitted as close as possible to the tank and at the lowest available point in the suction line. Avoid having the bottom of the tank more than 3 m (10') below the burner. The difference in levels between the pump and the suction and the return lines in the tank controls the maximum length of pipe, including horizontal and vertical runs.

It is necessary to enable the pump to raise the oil out of the tank. Problems can be encountered, with air collecting on shut down, if the fuel pump is situated at the highest point in the system.

Water Connections

Flow and return connections are provided on each side of the boiler, comprising two high level flow connections and two low level return connections. Connect the pipework to the selected connections and blank off the unused ones, it is always preferable to connect the flow and return pipe diagonally opposite if at all possible.

Retarders

There is an access door above the burner behind the heat shield, remove and check the retarders are sound and in position.

Most models have three retarders above a baffle plate. The 45/50 has three retarders only and the 90/110 has six retarders and two baffle plates.

Thermostats

Check that all thermostats are secure in their pockets. **On the 45/50, 50/70, 70/90 and 90/110 models it is recommended that on fully pumped systems the boiler stat phial is on the side nearest the flow outlet. If hot water is by gravity circulation fit the boiler stat phial on the gravity flow side.**

Inspection Hatch Shield

All boilers are fitted with a heat shield over the inspection hatch door. To gain access to the inspection hatch or test point, remove the front and top cover as shown in Fig. 18.

Important: The heat shield must be re-fitted after commissioning or servicing the boiler.

Commission the boiler - See page 24.

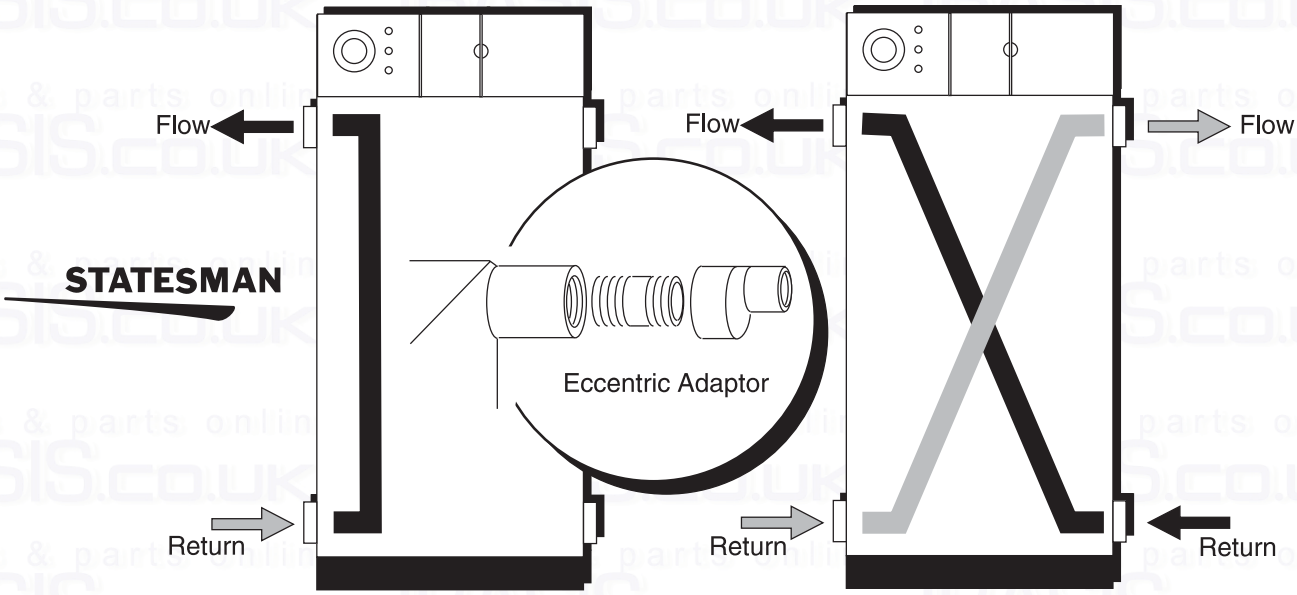
Flow
Flow
Flow
STATESMAN
Eccentric Adaptor
Return
Return
Return

Fig. 23

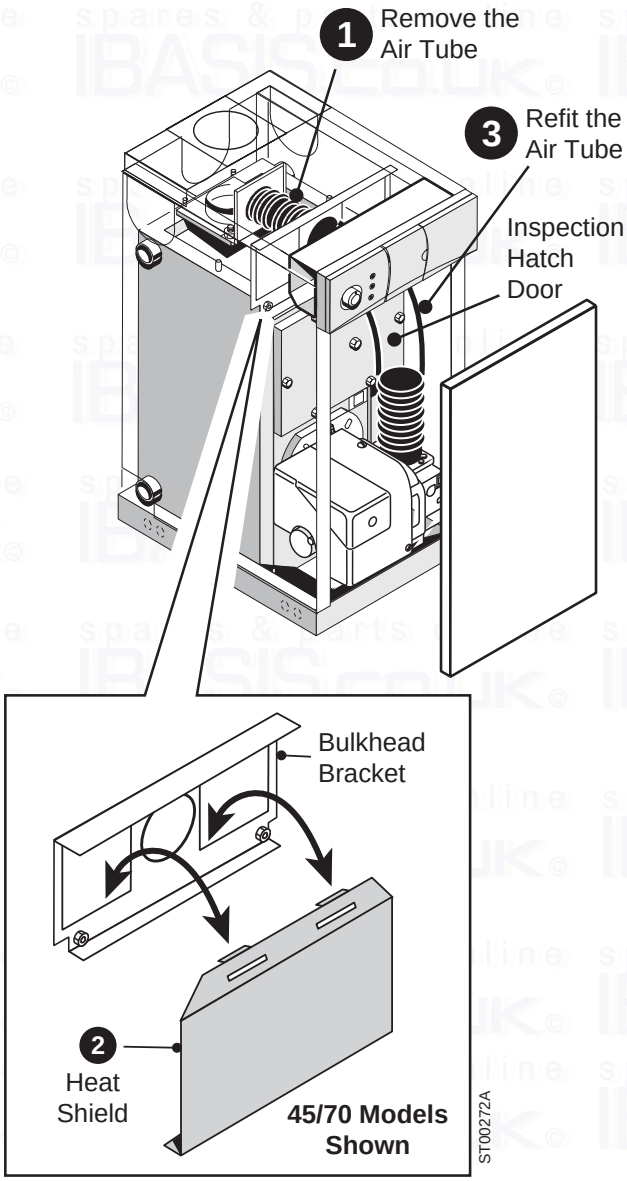
1 Remove the Air Tube
3 Refit the Air Tube
Inspection Hatch Door
Bulkhead Bracket
2 Heat Shield
45/70 Models Shown
ST00272A

Fig. 18

Commissioning

It is strongly recommended that the boiler/burner is commissioned by a qualified technician, preferably OFTEC trained and registered.

Burner

1. Unless already removed, remove the top casing panel, front casing panel and burner cover.
2. Temporally disconnect the fuel hose from the burner, run off the oil into a container to purge air from the fuel line.
3. Re-connect oil line and check for leaks.
4. Connect a pressure gauge to the oil pump.
5. Check that the water system is filled and vented.
6. Check that all controls are calling for heat.
7. Switch on electricity supply.
8. Turn on boiler thermostat. The burner will start and should light within 20 seconds. If the flame is not established during this time the burner lock out neon will light, wait about a minute before pressing the reset button to re-commence the lighting sequence.
   Continuous failure to light is almost certainly due to air remaining in the fuel supply.
9. Start and stop the burner two or three times until the flame cuts off sharply - this indicates any remaining air has been dispersed.
10. When the burner is operating check the fuel supply pressure, adjust if necessary to give the required output.

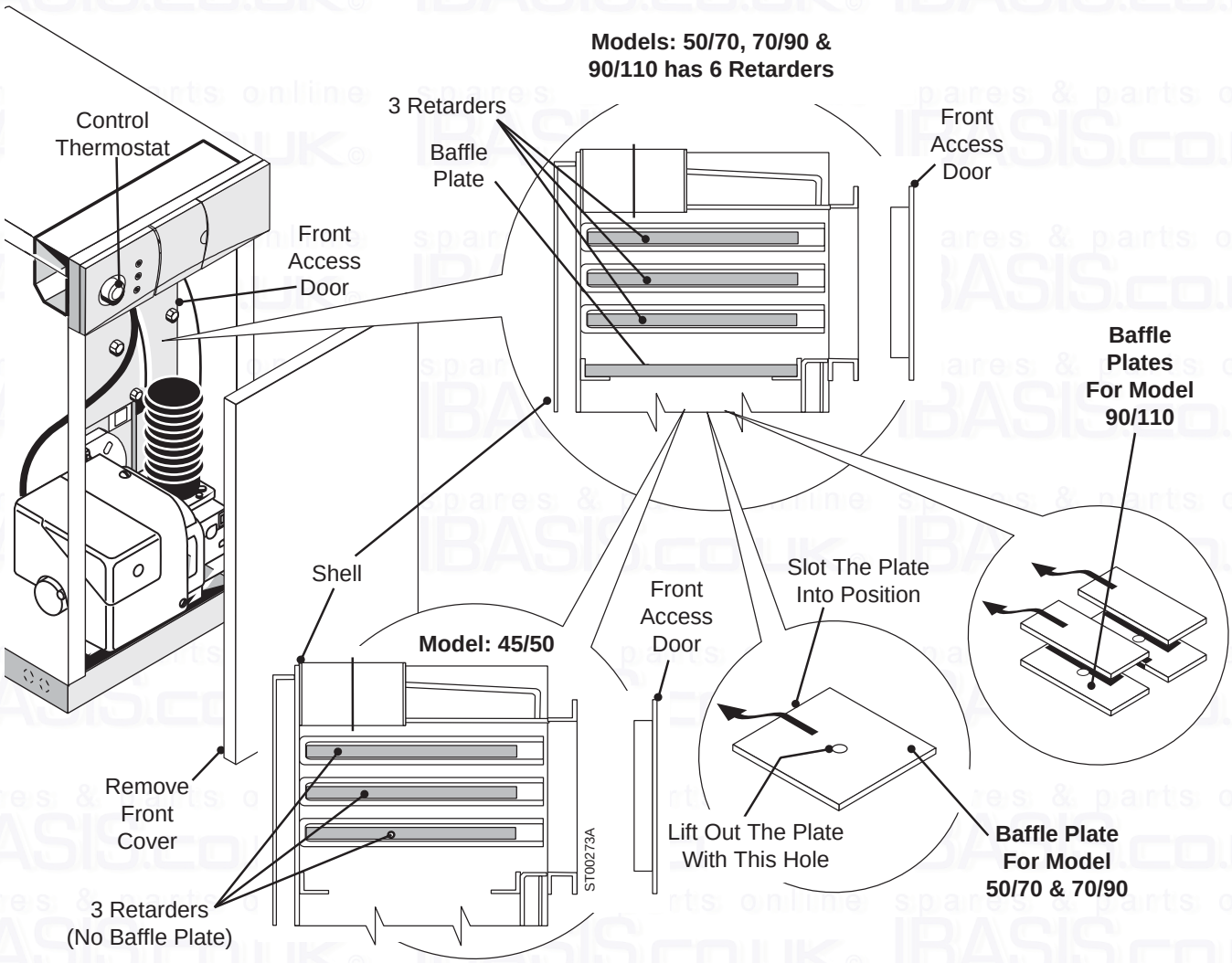

Fig. 19

11. Switch off the boiler, remove the pressure gauge and re-fit the plug.

12. Re-fit the burner cover and boiler casing panels,

13. Switch the boiler on. Allow the burner to run for about 15 minutes. The flue gas sampling point should be used whilst adjusting the air to give clean combustion. See the Burner Information Instructions for correct CO2 reading.

Boiler and system preparation

1. Remove the boiler top and front casing panels.

2. Check that all controls are not calling for heat.

3. Check that all water connections throughout the system are tight.

4. Having completed the necessary water connections, those connections not utilised should be plugged.

5. Check that the central heating system has been fully flushed out at installation using a flushing agent. If not, add a suitable flushing agent to the system and fill the system. Then drain the system while hot and immediately refill adding a suitable proprietary corrosion inhibitor (such as Fernox).

Completion of Commissioning

If the boiler is being passed over to the user immediately, advise the user of the precautions necessary to prevent damage to the system and to the building in the event of the system remaining inoperative during frost conditions.

Advise the user that for continued efficient and safe operation of the boiler, it is important that adequate servicing is carried out by a qualified engineer at least once a year for boilers using kerosene and twice a year if using gas oil.

Set the system controls to the user's requirements.

If the boiler is to be left inoperative, set all controls off. Turn off oil supply at the isolating valve and switch off the electricity supply.

If there is any possibility of the boiler and system being left inoperative during frosty conditions then drain the boiler and system.

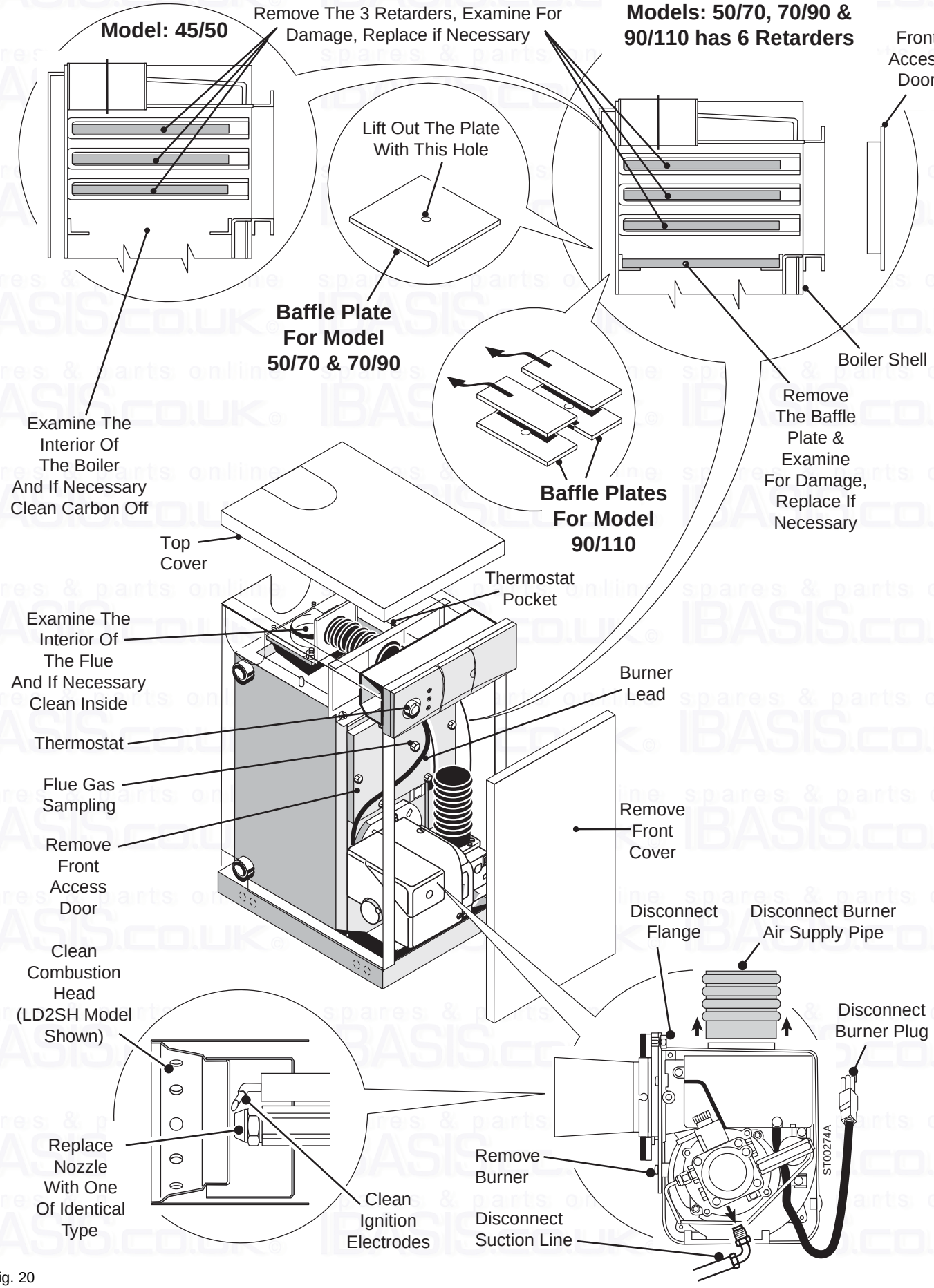
Model: 45/50
Remove The 3 Retarders, Examine For Damage, Replace if Necessary
Models: 50/70, 70/90 & 90/110 has 6 Retarders
Front Access Door
Lift Out The Plate With This Hole
Baffle Plate For Model 50/70 & 70/90
Boiler Shell
Remove The Baffle Plate & Examine For Damage, Replace If Necessary
Examine The Interior Of The Boiler And If Necessary Clean Carbon Off
Baffle Plates For Model 90/110
Top Cover
Thermostat Pocket
Examine The Interior Of The Flue And If Necessary Clean Inside
Burner Lead
Thermostat
Flue Gas Sampling
Remove Front Cover
Remove Front Access Door
Disconnect Flange
Disconnect Burner Air Supply Pipe
Clean Combustion Head (LD2SH Model Shown)
Disconnect Burner Plug
Replace Nozzle With One Of Identical Type
Remove Burner
Clean Ignition Electrodes
Disconnect Suction Line
ST00274A

Fig. 20

4 - Servicing & Maintenance

- If the balanced flue is dismantled for any reason and the flue seals disturbed, new seals must be fitted. Refer to the Parts Catalogue for part numbers.

Servicing

- To maintain the boiler's high thermal efficiency and reliable operation, it should be serviced annually by a qualified engineer preferably OFTEC trained and registered. If Gas Oil is the fuel two visits per year are advised.
- Operate the boiler and system. Note any faults which may need to be corrected during the service. It is advised that a set of combustion results are first obtained before undertaking any work.
- Switch off the electricity supply at the main isolating switch to the boiler. Turn off the fuel supply.
- Pull off front cover and disconnect the burner oil pipe(s), flexible air tube and burner plug, refer to the Burner Information Instructions.
- Remove inspection heat shield and keep to one side.
- Undo burner retaining nut and withdraw burner from boiler, remove combustion head. Clean combustion head, making sure all slots and holes are clean. Clean ignition electrodes, examine for signs of damage.
- **Remove nozzle and replace with one of identical type. Under no circumstances should the nozzle be stripped into component parts and never attempt to clean the nozzle tip.**
- Remove burner cover, pull out and clean photocell.
- Remove air intake assembly and right hand side of fan casing and check impeller for deposits - clean blades as necessary.
- Remove end cap from oil pump and take out filter. Wash clean with kerosene and replace. (Caution - the oil pump contains a small amount of fuel, which will be released, when the end cap is removed).
- Re-assemble burner and check dimensions, refer to Burner Information Instructions. **Note:** Check all seals and replace if damaged.
- Remove access door on front of boiler, remove retarders and baffle plate (not 45/50) noting their positions. Brush off all deposits, if they show signs of damage replace.
- Examine interior of boiler and if necessary clean. Remove any loose debris from the combustion chamber.
- Check the condition of the refractory base and repair any minor cracks with fire cement.
- When satisfied refit retarders and baffle plate (not 45/50) and refit access door making sure that seals and gaskets are correctly fitted.
- Refit burner to boiler, connect flexible air tube, oil pipe(s) and refit burner lead.
- With all controls calling for heat, turn on fuel and switch on electricity. Allow burner to run for several minutes and then carry out combustion tests, refer to the Burner Information Instructions and if necessary, adjust to obtain best results.
- On completion of combustion tests, replace front cover and inspection heat shield.

  Note: It is advisable to replace flexible fuel pipes every five years.

Maintenance

- To ensure trouble-free heating and hot water, it is most important that the boiler and burner are correctly serviced.
- This is best carried out by entering into a Service Contract with your Installer.
- Conditions of operation will vary, but with normal usage the following is strongly advised:

  At the end of winter

  - Switch off main switch.
  - Close all stop valves in the oil supply pipes.
  - Clean the flueways and all inside surfaces of the boiler.
  - Clean flue and chimney.
  - Clean all boiler internal surfaces.

  At the end of summer

  - Isolate elctrical supply to the boiler.
  - Switch off main switch.
  - Close all stop valves in the oil supply pipes.
  - Clean the flueways and all inside surfaces of the boiler.

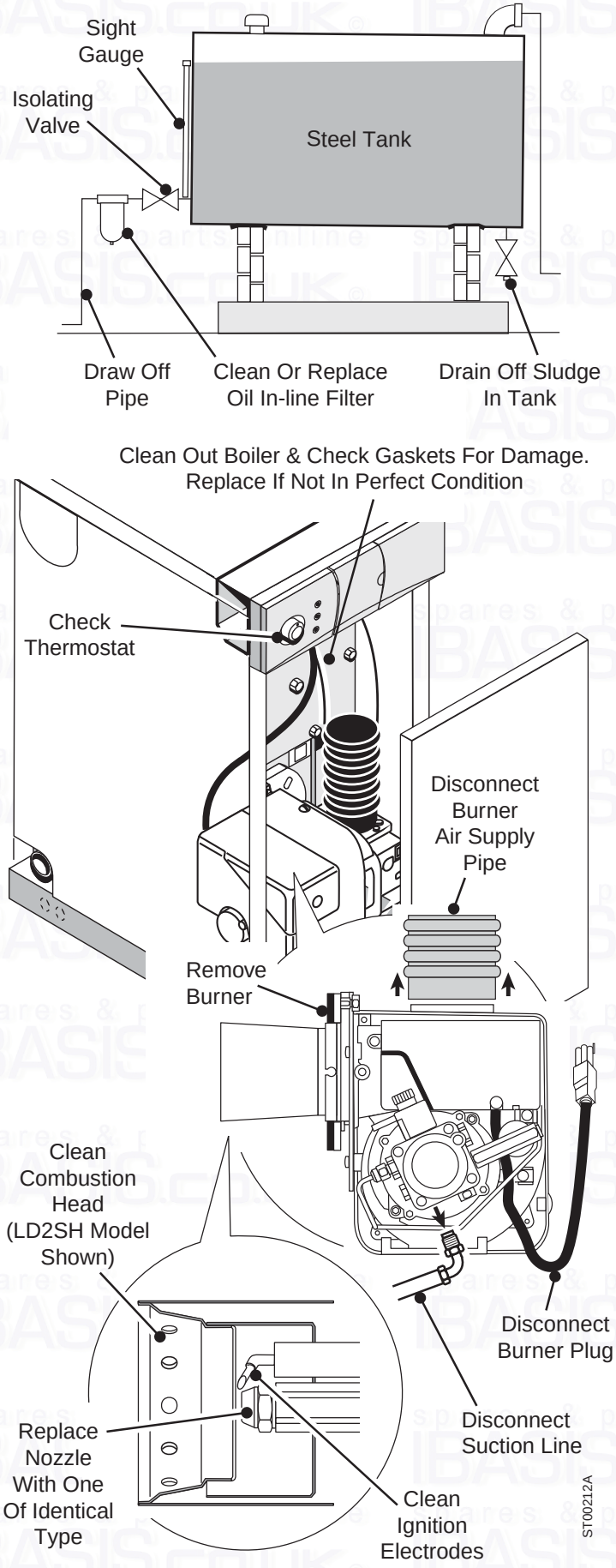

Fig. 21

- Clean flue and chimney.
- Clean all boiler internal surfaces.

Also,

- **De-sludge the fuel tank(s)**
  There should be a sludge valve fitted to the tank(s).

- **Replace/clean cartridge in main filter**
  If a paper microbic cartridge has been in service for more than one heating season, a replacement should be fitted. If a metal fine microbic filter is fitted then this should be cleaned with kerosene. Ensure that the filter bowl is thoroughly cleaned out before replacement.

- **Remove the burner**
  Service the burner, refer to the Burner Information Instructions.

- **Clean the boiler**
  This is required as follows if the boiler was not cleaned at the end of the heating season:
  Remove the inspection heat shield and the front access door from the boiler
  Remove the retarders and baffle plate (not 45/50), clean any soot and any hard deposits from the boiler surface.

- **Gaskets**
  It is advisable to replace all gaskets which have been disturbed unless it is certain that they are in excellent condition.

- **Check all thermostats**
  Test all thermostats to ensure that they are working correctly. Remove all dust with a soft brush and make sure that accessible contacts are clean.

Replacement of Parts

Isolate the boiler from the Electricity, Oil and Water supplies before replacing any components.

Replacement of Thermostats

1. Remove the front cover.
2. Pull off the temperature control knob.
3. If a clock is fitted un-clip from the facia and disconnect the plug at the back.
4. Remove the facia retaining screws at the base of the facia.
5. Lift off the facia and disconnect the indicator lights plug.
6. Remove the controls assembly securing screws.
7. Lift away the controls assembly and un-clip both sensors from their pockets.
8. Remove the retaining screws and split the controls box assembly apart.

Limit Thermostat

1. Remove the limit thermostat by disconnecting the electrical connections. Then unfasten the retaining nut at the base of the control box and remove.
2. Fit the new limit thermostat in reverse order to the above ensuring correct location.

Boiler Control Thermostat

1. Remove the boiler thermostat by disconnecting the electrical connections and removing the locknut securing the spindle to the controls assembly. Pull away the sensor from the control box front cover.
2. Fit the new boiler thermostat in reverse order to the above ensuring correct location.

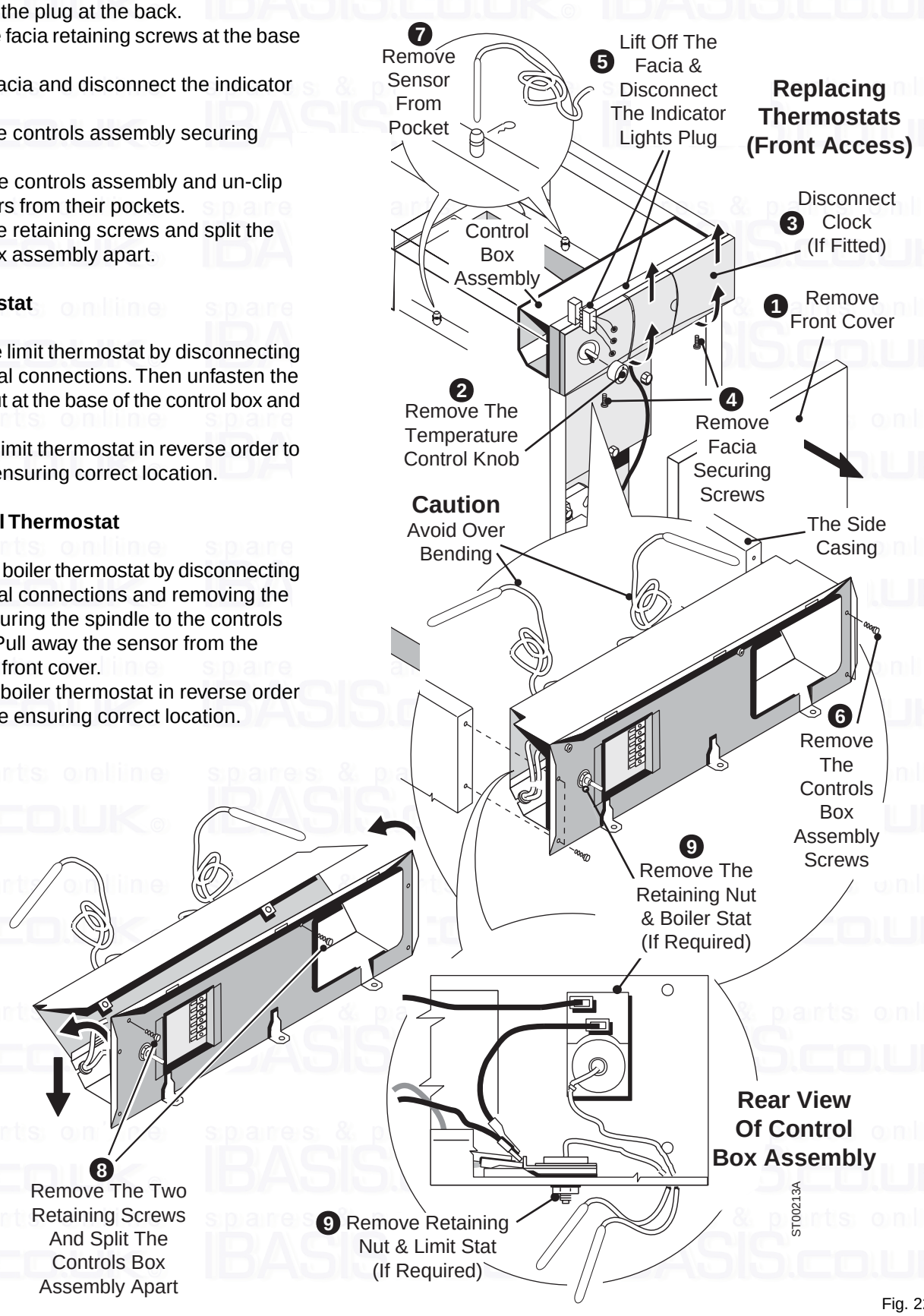

Fig. 22

5 - Fault Finding

SYMPTOM	CHECK LIST	ACTION
Burner Does Not Start, Motor Does Not Run	1. Mains switched on	Switch on
	2. Fuse in switch	Fit a fuse
	3. Fuse blown	Replace fuse
	4. All external controls call for heat	Set to call for heat
	5. Boiler stat calls for heat	Set to an “ON” position
	6. Limit stat tripped - Light on	Reset limit stat
	7. Boiler at lock out - Light on	Reset
	8. Faulty external wiring	Repair if necessary
	9. Faulty external controls	Check that they are operating
	10. Burner control box faulty	Check by fitting spare box
	11. Boiler control panel wiring faulty	Check & refer to wiring diagram Section 1
	12. Burner motor seized	Remove and check ease of rotation

SYMPTOM	CHECK FOR	ACTION
Burner Starts, No Flame Established, No Oil To Burner	1. Oil in the tank	Re-Fill
	2. All valves open from tank to burner	Open valves
	3. Fire valve correctly set	Set as per manufactures instructions
	4. Filter blocked	Clean and replace elements
	5. Air lock in fuel lines	Bleed burner
	6. Nozzle blocked	Replace nozzle
	7. Pump pressure correct	Set to correct pressure refer to Burner Instructions
	8. Pump rotates:- Is it correct for either one or two pipe	Dismantle pump from Motor and check freedom of rotation
	9. Pump drive coupling faulty	Remove pump and examine coupling for signs of wear and damage, refer to Burner Instructions
	10. Solenoid valve not opening	Check operation of the solenoid valve

SYMPTOM	CHECK FOR	ACTION
Burner Starts, No Flame But Oil To Burner	1. Signs of fuel in boiler	Check as for 2 to 8 below
	2. Correct combustion head settings	Set correctly refer to Burner Instructions
	3. Electrodes clean and not damaged	Clean
	4. Nozzle blocked	Replace nozzle
	5. If two pipe system, check pipe work is correct	Amend as necessary
	6. Faulty Transformer	Replace control box if no spark is suspected
	7. Electrode leads shorting out	Check leads for signs of shorting if found replace. Refer to Burner Instructions
	8. Faulty pump solenoid	Replace pump assembly

SYMPTOM	CHECK FOR	ACTION
Burner Starts, Flame Established But Goes To Lock Out After 15 Seconds	1. Intermittent oil supply	Check for dirt in filters or oil in fuel lines
	2. If two pipe system, that pipework is correct	Refer to Table 5, Page 23
	3. Combustion head settings correct	Refer to Burner Instructions
	4. Photocell not fitted correctly	Replace correctly
	5. Photocell circuit faulty	Replace
	6. Dirty Photocell	Clean and replace

SYMPTOM	POSSIBLE CAUSE	ACTION
Locks Out In Morning Only	1. Combustion air setting too high	Re-set and confirm by measuring CO_2 refer to Burner Instructions
	2. Air collects in system overnight	Examine all joints and if suspect re-make
	3. Faulty non return valve - 2 pipe system	Replace faulty valve

SYMPTOM	CHECK FOR	ACTION
Flame Established But Not Maintained	1. Air in fuel line	Check for joints for increases of air rectify as necessary, bleed burner and restart
	2. Combustion settings incorrect	Adjust settings and confirm by flue gas analysis
	3. Wrong grade of oil	Obtain correct grade of fuel or in case of conventional flue models adjust burner for correct grade.
	4. Combustion products leaking	Check all seals, particularly the gasket between burner and boiler
	5. Combustion products re-circulating into balanced flue terminal	Insert CO_2 probe and check

SYMPTOM	CHECK FOR	ACTION
Burner Runs But Smoke, and or Smell, and or Pulsation	1. Correct grade of fuel used	Either adjust for fuel used or drain and refill tank correctly
	2. Correct nozzle fitted	Refer to Burner Instructions and fit correct nozzle
	3. Correct oil pressure	Refer to Burner Instructions and set correct pressure
	4. Correct air settings	Do combustion checks and re-set
	5. Air in fuel lines	Bleed air from lines
	6. Adequate access for combustion air	Refer to Section 2
	7. Adequate ventilation	Refer to Section 2
	8. One sided flame	Remove burner, clean and re-check settings, refer to Burner Instructions Clean or replace the nozzle
	9. Oil leak within burner.	Remove burner and examine for leakage, repair suspect joints
	10. Oil leak to burner within boiler	Suspect pump solenoid, replace pump assembly
	11. Flue plus boiler resistance too high	Check retarders & baffle plate positions, check for obstructions
	12. Defective nozzle	Replace nozzle with one of same specification

SYMPTOM	POSSIBLE CAUSE	ACTION
	13. Bad oil cut off	Bleed air from pump or replace pump assembly
	14. Dirt collecting on fan	Remove burner and clean
	15. Combustion products leaking	Check all joints, replace suspect seals

SYMPTOM	POSSIBLE CAUSE	ACTION
Other Problems	1. Boiler frequently tripping on limit stat	Replace limit stat
	2. Limit stat calibration too low Boiler stat max temperature too high	Check outlet temp of boiler and if necessary replace
	3. Lack of flow through boiler.	If possible try circulating pump on higher setting (Statesman only)
	4. Condensation from Chimney	Could take place in cold weather due to high efficiency of boiler. Check system complies with Standard
	5. Noisy Motor	Look for signs of oil leaking from pump, motor and coupling
	6. Pump pressure oscillating	Air in oil, Dirt in pump regulating valve Defective pump coupling Faulty gauge
	7. Faulty pump cut off:- oil in boiler	Defective Solenoid valve Air in fuel lines

A Burner Fault Finding Guide is incorporated within the Burner Information Instructions.

6 - Short Spares

Drg. Ref.	Description	Model - see key	Makers Part Number
1	Boiler thermostat	A, B, C, D	26009018
2	Thermostat knob	A, B, C, D	26002014
3	Limit thermostat	A, B, C, D	26009097
4	Mains inlet plug	A, B, C, D	26009004
5	Retarder	A, B	26001334
	Retarder	C	26001335
	Retarder	D	26001283
6	Baffle Plate	B	5105754
	Baffle Plate	C, E	5105964
	Baffle Plate	D	5105755
7	Front plate seal	A, B	5102817
	Front Plate Seal	C, D	5102818
8	Front Plate Seal	A, B, C, D	5102816
9	Viewing glass	A, B, C, D	10/17500
10	Viewing glass gasket	A, B, C, D	5000726
11	Air duct tube	A, B, C, D	5102666
12	Jubilee clips	A, B, C, D	26009029
13	Red neon	A, B, C, D	26009009
14	Amber neon	A, B, C, D	26009010
15	Viewing glass gasket	A, B, C, D	10/17499
16	Green neon	A, B, C, D	26009011

Key: A = 45/50. B = 50/70. C = 70/90. D = 90/110.

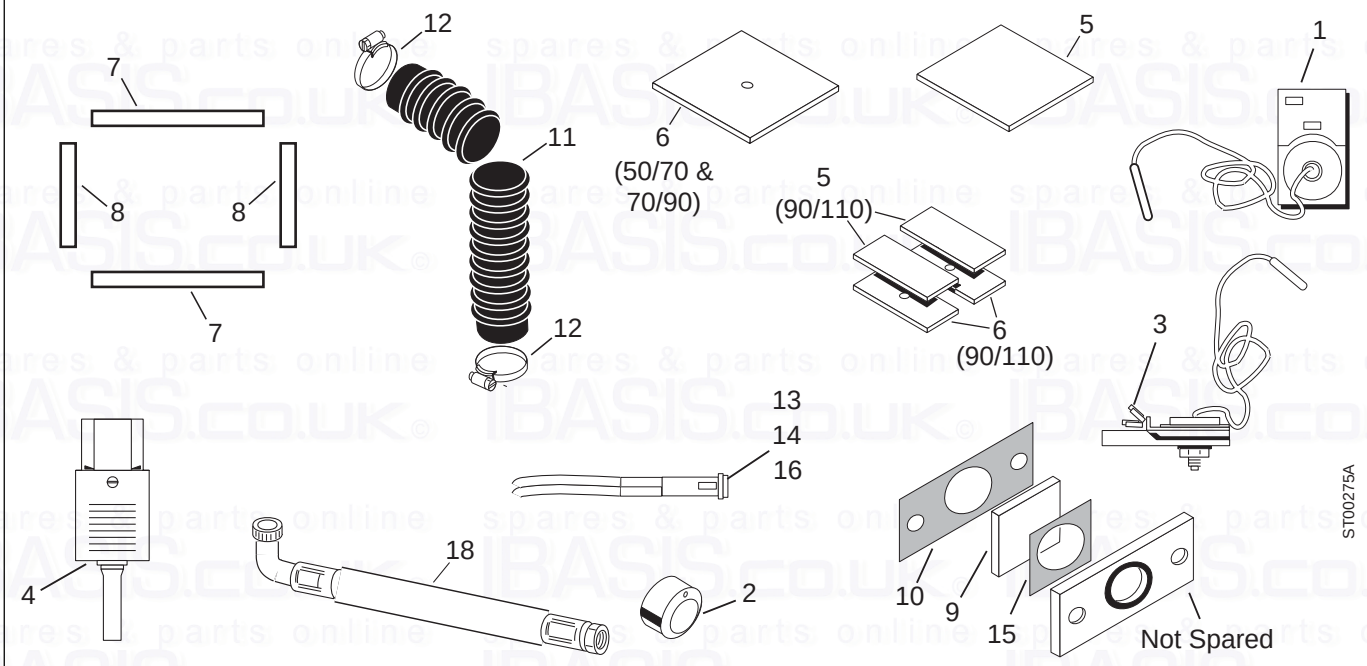

7 - Flue Kit Options

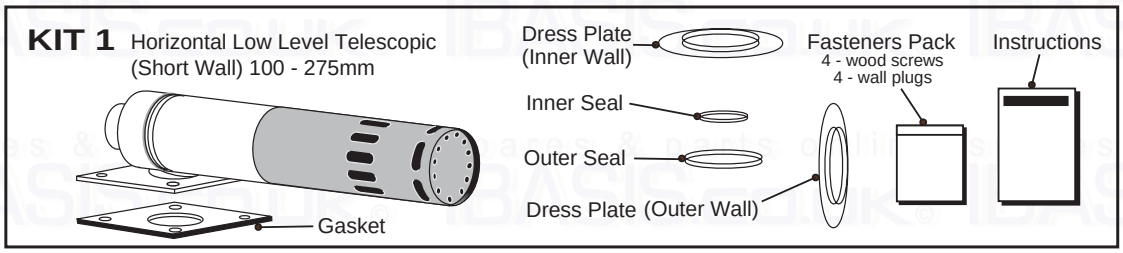

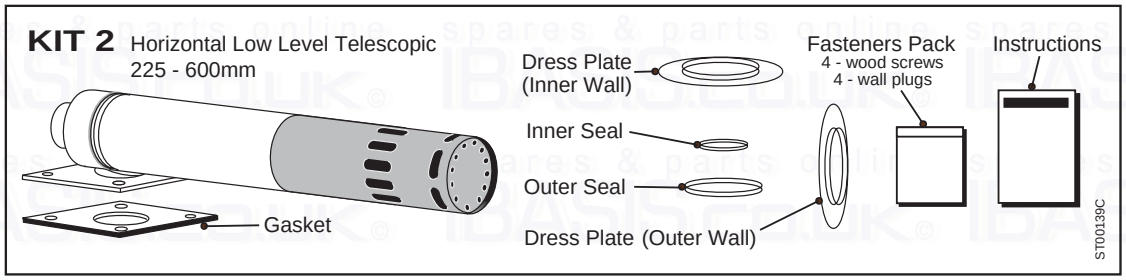

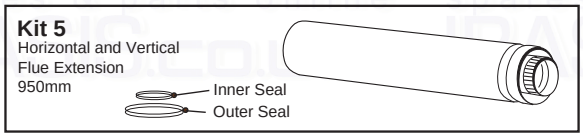

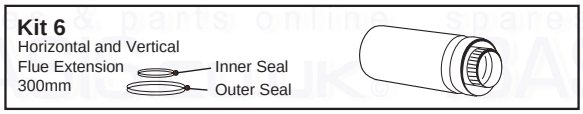

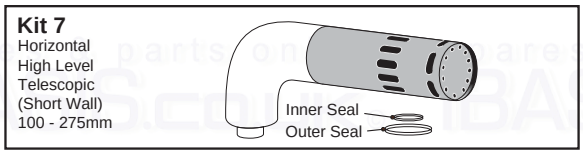

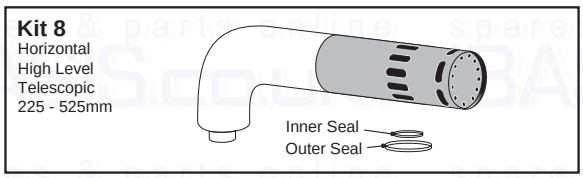

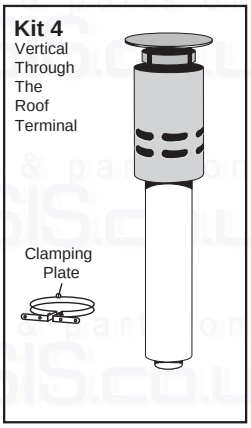

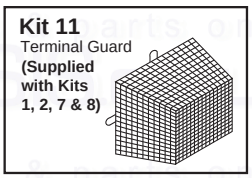

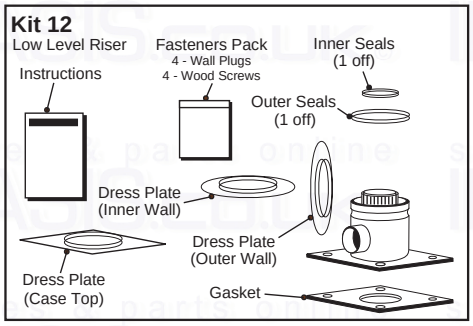

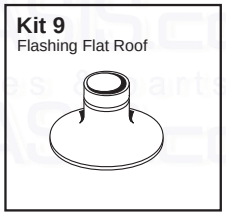

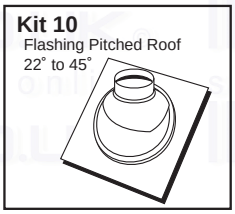

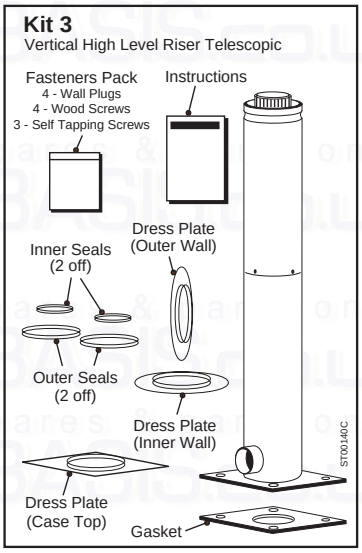

Publication No. 5105707 - Iss. **02** (12/2001)

General Enquiries

Tel. **08706 060 780**

Technical *

Tel. **08706 049 049**

Service *

Tel. **08706 096 096**

Fax. **01926 410 006**

Literature Request

Tel. **08706 060 623**

* To aid continuous improvement and staff training, calls to this line may be monitored or recorded.

All descriptions and illustrations provided in this leaflet have been carefully prepared but we reserve the right to make changes and improvements in our products which may affect the accuracy of the information contained in this leaflet. All goods are sold subject to our standard Conditions of Sale which are available on request.

POTTERTON

Baxi Potterton
Brownedge Road, Bamber Bridge
Preston, Lancashire
PR5 6SN

www.potterton.co.uk