You can rely on POTTERTON

Installation & Service Instructions

Apollo

Condensing Combination Boiler

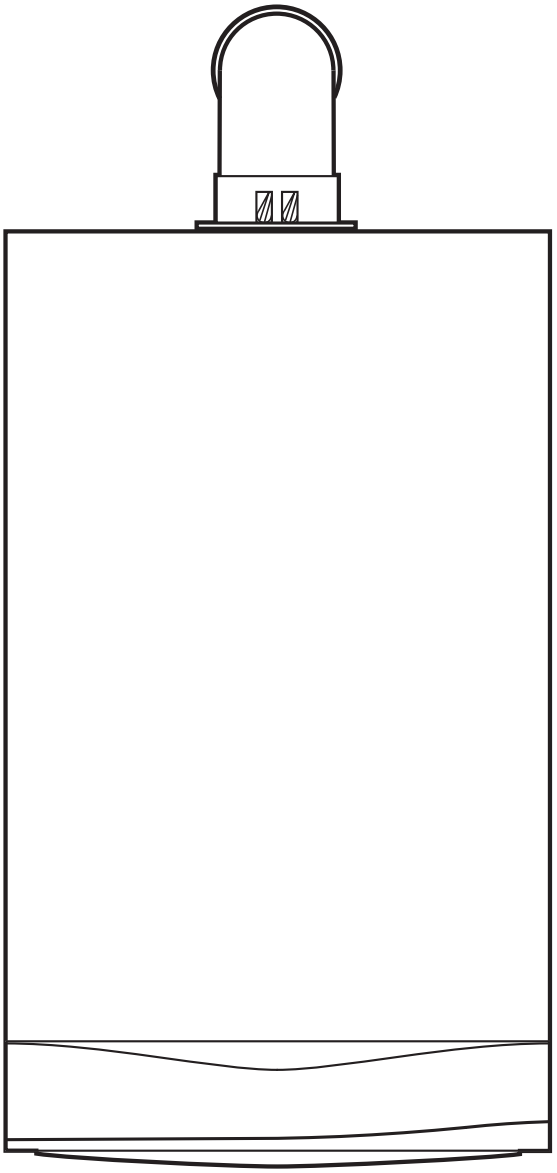

These instructions include the Benchmark Commissioning Checklist and should be left with the user for safe keeping.

Natural Gas

Potterton Apollo 25
G.C.N° 47-393-38

Potterton Apollo 30
G.C.N° 47-393-37

The Benchmark Scheme

Benchmark places responsibilities on both manufacturers and installers. The purpose is to ensure that customers are provided with the correct equipment for their needs, that it is installed, commissioned and serviced in accordance with the manufacturer's instructions by competent persons and that it meets the requirements of the appropriate Building Regulations. The Benchmark Checklist can be used to demonstrate compliance with Building Regulations and should be provided to the customer for future reference.

Installers are required to carry out installation, commissioning and servicing work in accordance with the Benchmark Code of Practice which is available from the Heating and Hotwater Industry Council who manage and promote the Scheme. Visit **www.centralheating.co.uk** for more information.

© Baxi Heating UK Ltd 2012 All rights reserved. No part of this publication may be reproduced or transmitted in any form or by any means, or stored in any retrieval system of any nature (including in any database), in each case whether electronic, mechanical, recording or otherwise, without the prior written permission of the copyright owner, except for permitted fair dealing under Copyrights, Designs and Patents Act 1988.

Applications for the copyright owner's permission to reproduce or make other use of any part of this publication should be made, giving details of the proposed use, to the following address:

The Company Secretary, Baxi Heating UK Ltd,
Brooks House, Coventry Road, Warwick. CV34 4LL

Full acknowledgement of author and source must be given.

WARNING: Any person who does any unauthorised act in relation to a copyright work may be liable to criminal prosecution and civil claims for damages.

Building Regulations and the Benchmark Commissioning Checklist

Building Regulations (England & Wales) require notification of the installation of a heating appliance to the relevant Local Authority Building Control Department. From 1 April 2005 this can be achieved via a Competent Persons Self Certification Scheme as an option to notifying the Local Authority directly. Similar arrangements will follow for Scotland and will apply in Northern Ireland from 1 January 2006.

The Health & Safety Executive operates the 'Gas Safe Register', a self-certification scheme for gas heating appliances.

These arrangements represent a change from the situation whereby compliance with Building Regulations was accepted as being demonstrated by completion of the Benchmark Logbook (which was then left on site with the customer).

With the introduction of Self Certification Schemes, the Benchmark Logbook is being withdrawn. However, a similar document in the form of a commissioning checklist and service interval record is incorporated at the back of these instructions.

This company is a member of the Benchmark initiative and fully supports the aims of the programme. Its aim is to improve the standards of installation and commissioning of central heating systems in the UK and to encourage the regular servicing of all central heating systems to ensure safety and efficiency.

Building Regulations require that installations should comply with manufacturer's instructions. It is therefore important that the commissioning checklist is completed by the installer. The relevant section of Building Regulations only relates to dwellings. Therefore the checklist only applies if the appliance is being installed in a dwelling or some related structure.

The flowchart opposite gives guidance for installers on the process necessary to ensure compliance with Building Regulations.

CE 0086

energy saving trust recommended
Certification Mark

WRAS APPROVED PRODUCT

benchmark COLLECTIVE MARK
THE MARK OF QUALITY FOR THE INSTALLATION, COMMISSIONING AND SERVICING OF DOMESTIC HEATING AND HOT WATER SYSTEMS

BSI ISO 9001 FM 00866

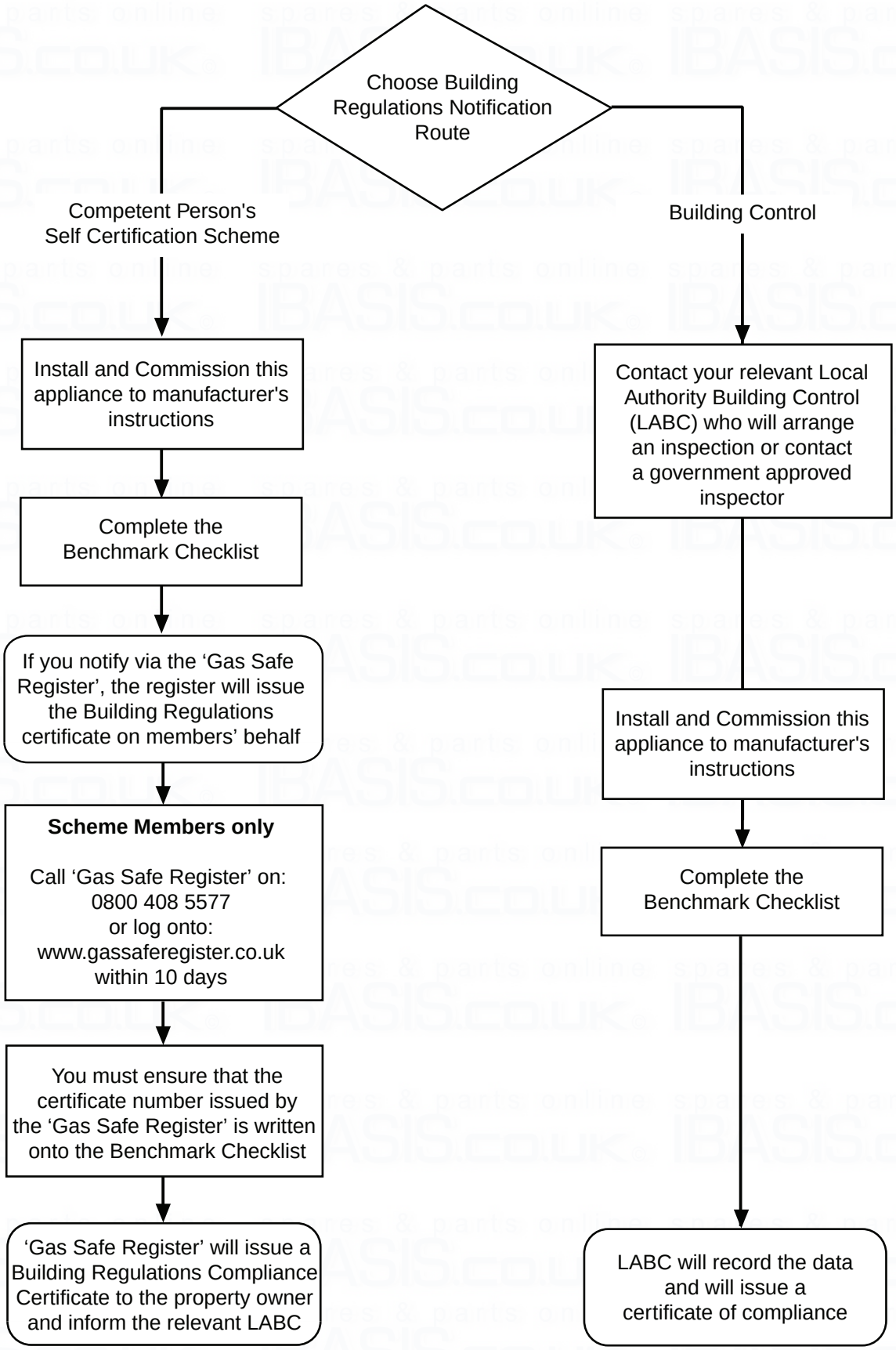

© Baxi Heating UK Ltd 2012

IMPORTANT - Installation, Commissioning, Service & Repair

This appliance must be installed in accordance with the manufacturer's instructions and the regulations in force. Read the instructions fully before installing or using the appliance.

In GB, this must be carried out by a competent person as stated in the Gas Safety (Installation & Use) Regulations.

Definition of competence: A person who works for a Gas Safe registered company and holding current certificates in the relevant ACS modules, is deemed competent.

In IE, this must be carried out by a competent person as stated in I.S. 813 "Domestic Gas Installations".

The addition of anything that may interfere with the normal operation of the appliance without express written permission from the manufacturer or his agent could invalidate the appliance warranty. In GB this could also infringe the Gas Safety (Installation and Use) Regulations.

Warning - Check the information on the data plate is compatible with local supply conditions.

All Gas Safe registered engineers carry an ID card with their licence number and a photograph. You can check your engineer is registered by telephoning 0800 408 5500 or online at www.gassaferegister.co.uk

The boiler meets the requirements of Statutory Instrument " The Boiler (Efficiency) Regulations 1993 N° 3083" and is deemed to meet the requirements of Directive 92/42/EEC on the energy efficiency requirements for new hot water boilers fired with liquid or gaseous fuels:-

Type test for purpose of Regulation 5 certified by:
Notified Body 0087.

Product/Production certified by:
Notified Body 0086.

For GB/IE only.

This company declare that no substances harmful to health are contained in the appliance or used during appliance manufacture.

The appliance is suitable only for installation in GB and IE and should be installed in accordance with the rules in force, and only used in a suitably ventilated location.

In GB, the installation must be carried out by a Gas Safe Registered Installer. It must be carried out in accordance with the relevant requirements of the:

- Gas Safety (Installation & Use) Regulations.
- The appropriate Building Regulations either The Building Regulations, The Building Regulations (Scotland), Building Regulations (Northern Ireland).
- The Water Fittings Regulations or Water Byelaws in Scotland.
- The Current I.E.E. Wiring Regulations.

Where no specific instructions are given, reference should be made to the relevant British Standard Code of Practice.

In IE, the installation must be carried out by a competent Person and installed in accordance with the current edition of I.S. 813 'Domestic Gas Installations', the current Building Regulations and reference should be made to the current ETCI rules for electrical installation.

All systems must be thoroughly flushed and treated with inhibitor (see section 6.2).

Codes of Practice - refer to the most recent version

In GB the following Codes of Practice apply:

Standard	Scope
BS 6891	Gas Installation.
BS 5546	Installation of hot water supplies for domestic purposes.
BS EN 12828	Heating systems in buildings.
BS EN 12831	Heating systems in building - calculation of load.
BS EN 14336	Installation & commissioning of water based heating systems.
BS 6798	Installation of gas fired hot water boilers.
BS 5440 Part 1	Flues.
BS 5440 Part 2	Ventilation.
BS 7074	Expansion vessels and ancillary equipment for sealed water systems.
BS 7593	Treatment of water in domestic hot water central heating systems.

In IE the following Codes of Practice apply:

Standard	Scope
I.S. 813	Domestic Gas Installations.
The following standards give valuable additional information;	
BS 5546	Installation of hot water supplies for domestic purposes.
BS EN 12828	Heating systems in buildings.
BS EN 12831	Heating systems in building - calculation of load.
BS EN 14336	Installation & commissioning of water based heating systems.
BS 7074	Expansion vessels and ancillary equipment for sealed water systems.
BS 7593	Treatment of water in domestic hot water central heating systems.

 © Baxi Heating UK Ltd 2012

General

The following advice should be adhered to, from when first handling the boiler to the final stages of installation, and also during maintenance.

Most injuries as a result of inappropriate handling and lifting are to the back, but all other parts of the body are vulnerable, particularly shoulders, arms and hands. Health & Safety is the responsibility of EVERYONE.

There is no 'safe' limit for one man - each person has different capabilities. The boiler should be handled and lifted by TWO PEOPLE.

Do not handle or lift unless you feel physically able.

Wear appropriate Personal Protection Equipment e.g. protective gloves, safety footwear etc.

Preparation

Co-ordinate movements - know where, and when, you are both going.

Minimise the number of times needed to move the boiler - plan ahead.

Always ensure when handling or lifting the route is clear and unobstructed. If possible avoid steps, wet or slippery surfaces, unlit areas etc. and take special care on ladders/into lofts.

Technique

When handling or lifting always use safe techniques - keep your back straight, bend your knees. Don't twist - move your feet, avoid bending forwards and sideways and keep the load as close to your body as possible.

Where possible transport the boiler using a sack truck or other suitable trolley.

Always grip the boiler firmly, and before lifting feel where the weight is concentrated to establish the centre of gravity, repositioning yourself as necessary. See the 'Installation' section of these instructions for recommended lift points.

Remember

The circumstances of each installation are different. Always asses the risks associated with handling and lifting according to the individual conditions.

If at any time when installing the boiler you feel that you may have injured yourself STOP !!
DO NOT 'work through' the pain - you may cause further injury.

IF IN ANY DOUBT DO NOT HANDLE OR LIFT THE BOILER - OBTAIN ADVICE OR ASSISTANCE BEFORE PROCEEDING !!

© Baxi Heating UK Ltd 2012

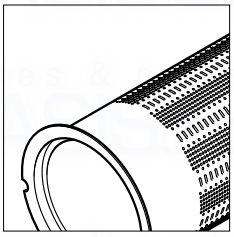

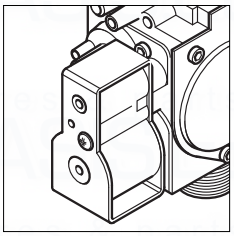

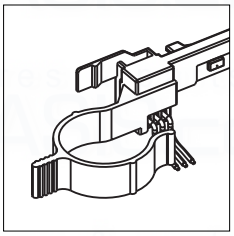

CONTENTS

Section		Page
1.0	Introduction	7
2.0	General Layout	8
3.0	Appliance Operation	9
4.0	Technical Data	10
5.0	Dimensions and Fixings	11
6.0	System Details	12
7.0	Site Requirements	15
8.0	Flue Options	19
9.0	Plume Displacement	23
10.0	Installation	27
11.0	Commissioning	32
12.0	Completion	34
13.0	Servicing	35
14.0	Changing Components	37
15.0	Setting the Gas Valve	46
16.0	Electrical	47
17.0	Short Parts List	48
18.0	Fault Finding	49
	Benchmark Checklist	58

 © Baxi Heating UK Ltd 2012

1.0 Introduction

1.1 Description

1. The Potterton Apollo is a fully automatic gas fired wall mounted condensing combination boiler. It is room sealed and fan assisted, and will serve central heating and mains fed domestic hot water.

2. The boiler is set to give a maximum output of :-

25 models - 25.94 kW DHW
26.95 kW CH (Condensing)
30 models - 28.63 kW DHW
30.2 kW CH (Condensing)

3. It is designed for use on Natural Gas (G20).

4. The boiler is suitable for use only on fully pumped sealed heating systems. Priority is given to domestic hot water.

5. The boiler data badge gives details of the model, serial number and Gas Council number. It is visible when the case front panel is removed and the control box hinged down (Fig. 1).

6. The boiler model name and serial number are also shown on the information label on the back of the facia door. This is for user reference.

7. The boiler is intended to be installed in residential / commercial / light industrial E.M.C. environments on a governed meter supply only.

8. The boiler must be installed with one of the purpose designed flues such as the standard horizontal flue kit, part no. 5118489.

9. **All systems must be thoroughly flushed and treated with inhibitor (see section 6.2).**

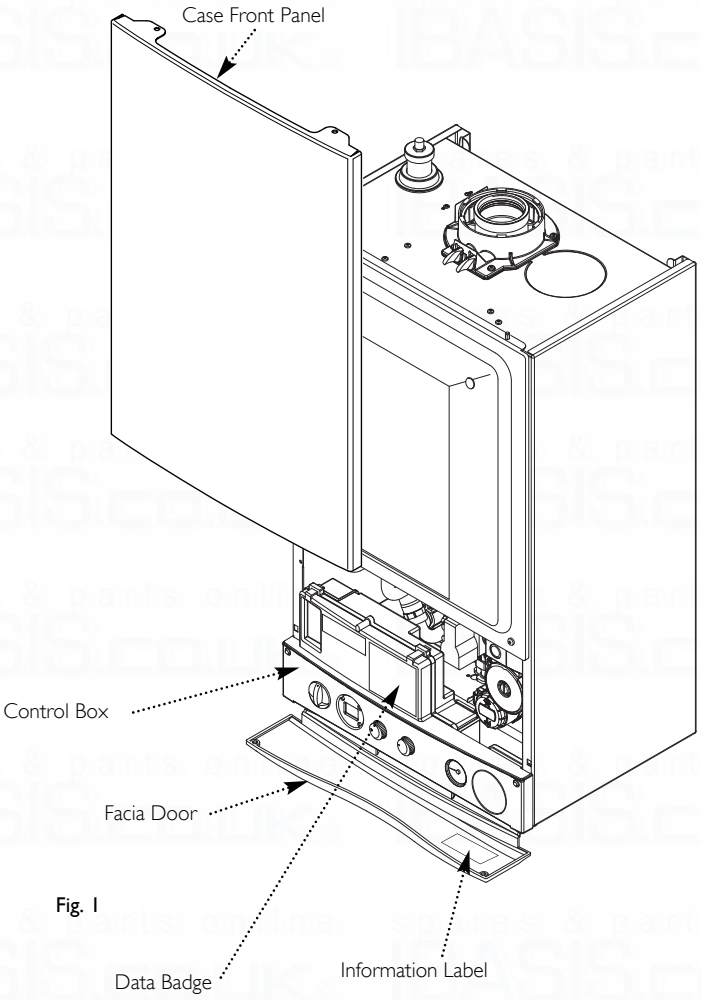

Fig. 1

1.2 Contents of Pack

1. Boiler Unit
2. Wall Mounting Plate
3. Set of Pipes & Taps (inc. nuts)
4. Template & 'Quick Fit' Guide
5. Literature Pack

© Baxi Heating UK Ltd 2012

2.0 General Layout

2.1 Layout

1. Expansion Vessel
2. Diverter Valve Motor
3. DHW Plate Heat Exchanger
4. Circulation Pump
5. Automatic Air Vent
6. Pressure Relief Valve
7. Selector Switch
8. Central Heating System Pressure Gauge
9. PCB
10. Control Box
12. Condensate Trap
13. Heat Exchanger Air Vent
14. Electrode Assembly
15. Primary Heat Exchanger
16. Fan Assembly
17. On/Off/Reset Selector Switch
18. Central Heating Temperature Control
19. Hot Water Temperature Control
20. Water Pressure Sensor
21. Gas/Air Inlet
22. Burner Mounting Panel
23. Igniter
24. Burner On Light
25. Central Heating Mode Light
26. Domestic Hot Water Mode Light
27. Display
28. Position of Optional Integral Timer
29. Safety Thermostat
30. Gas Valve

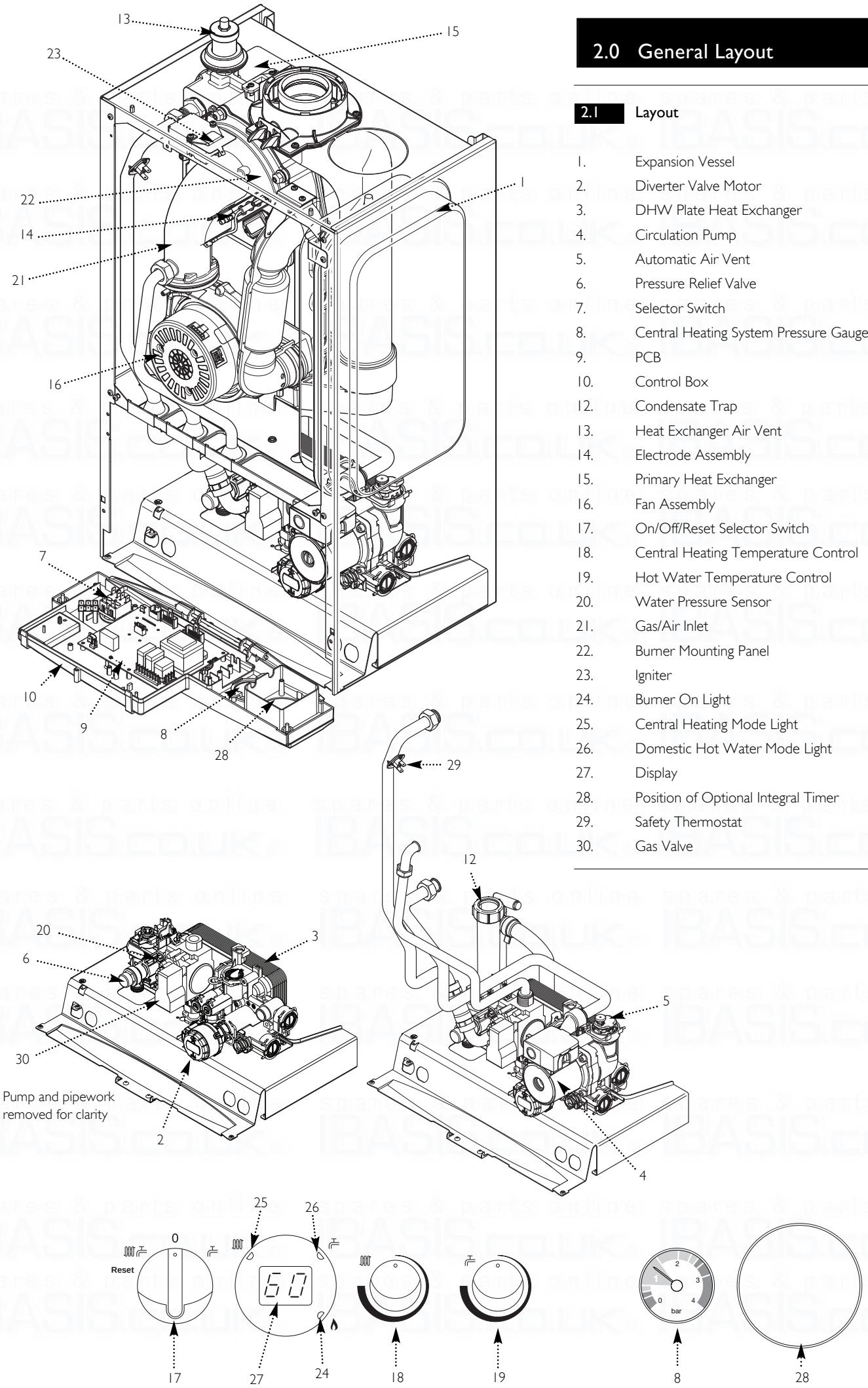

© Baxi Heating UK Ltd 2012

Boiler Schematic

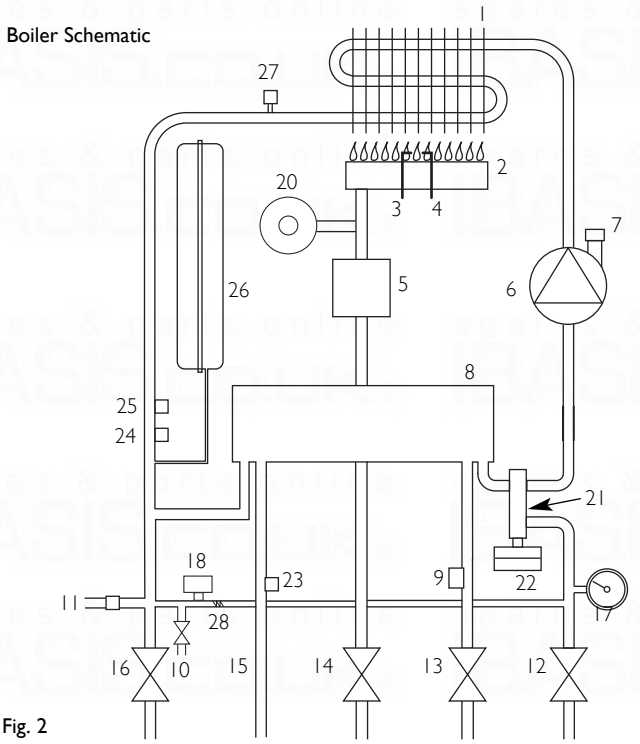

Fig. 2

Key

1 Primary Heat Exchanger
2 Burner
3 Ignition Electrodes
4 Flame Sensing Electrode
5 Gas Valve
6 Pump
7 Automatic Air Vent
8 Plate Heat Exchanger
9 DHW Flow Sensor ('Hall Effect' Sensor)
10 Pressure Relief Valve
11 Boiler Drain Point
12 Heating Return
13 Cold Water Inlet On/Off Valve and Filter
14 Gas Inlet
15 Domestic Hot Water Outlet
16 Heating Flow
17 Pressure Gauge
18 Water Pressure Sensor
20 Fan
21 Diverter Valve Assembly
22 Diverter Valve Motor
23 Domestic Hot Water Flow Temperature Sensor
24 Safety Thermostat
25 Central Heating Temperature Sensor
26 Expansion Vessel
27 Heat Exchanger Air Vent
28 By-pass Valve

3.0 Appliance Operation

3.1 Central Heating Mode (Fig. 2)

1. With a demand for heating, the pump circulates water through the primary circuit.

2. Once main burner ignites the fan speed controls the gas rate to maintain the heating temperature measured by the temperature sensor.

3. When the flow temperature exceeds the setting temperature, a 3 minute delay occurs before the burner relights automatically (anti-cycling). The pump continues to run during this period.

4. When the demand is satisfied the burner is extinguished and the pump continues to run for a period of 3 minutes (Pump Overrun).

3.2 Domestic Hot Water Mode (Fig. 2)

1. Priority is given to the domestic hot water supply. A demand at a tap or shower will override any central heating requirement.

2. The flow of water will operate the Hall Effect Sensor which requests the 3 way valve to change position. This will allow the pump to circulate the primary water through the DHW plate heat exchanger.

3. The burner will light automatically and the temperature of the domestic hot water is controlled by the temperature sensor.

4. When the domestic hot water demand ceases the burner will extinguish and the diverter valve will remain in the domestic hot water mode, unless there is a demand for central heating.

IMPORTANT: When the selector switch is in the '0' (Off) position the electrical supply to the boiler is isolated. The boiler will not operate and the integral timer will require resetting once the selector switch is set to either Position ( ) or Position ( ).

3.3 Frost Protection Mode

1. The frost protection mode is integral to the appliance and functions only with the selector switch (see Section 2.1) in the domestic hot water and central heating position. If the system temperature falls below 5° C then the boiler will fire on its minimum setting until a flow temperature of 30° C is reached. Further protection can be incorporated by using a system frost thermostat.

3.4 Pump Protection

1. With the selector switch (see Section 2.1) in either the central heating or central heating and domestic hot water position, the pump will automatically operate for 1 minute in every 24 hours to prevent sticking.

© Baxi Heating UK Ltd 2012

4.1 Potterton Apollo 25 & 30

Appliance Type		C_{13}	C_{33}	C_{53}
Appliance Category		CAT I $_{2H}$		
Heat Input CH (Net)		Max	Min	
25 model	kW	26.06	7.82	
30 model	kW	29.32	8.8	
Heat Input CH (Gross)		Max	Min	
25 model	kW	28.92	8.68	
30 model	kW	32.54	9.77	
Heat Output CH (Non-Condensing)		Max	Min	
25 model	kW	25.94	7.61	
30 model	kW	28.63	8.56	
Heat Output CH (Condensing)		Max	Min	
25 model	kW	26.95	8.37	
30 model	kW	30.2	9.42	
Heat Input DHW (Net)		Max		
25 model	kW	26.06		
30 model	kW	30.0		
Heat Input DHW (Gross)		Max		
25 model	kW	28.92		
30 model	kW	33.3		
Heat Output DHW		Max		
25 model	kW	24.88		
30 model	kW	30.0		
Max Gas Rate	(Natural Gas - G20) (After 10 mins)			
25 model	m^3/h	2.76		
30 model	m^3/h	3.17		

Inlet Pressure (Natural Gas - G20)
mbar 20

Injector (Natural Gas - G20)
6.0mm

Electrical Supply 230V~ 50H_z
(Appliance must be connected to an earthed supply)

Power Consumption
150W

Electrical Protection
IPX0D (with timer)
IPX4D (without timer)

External Fuse Rating 3A

Internal Fuse Rating F2L

Condensate Drain
To accept 21.5mm (3/4 in) plastic waste pipe

Flue Terminal Dimensions		
	Diameter	100mm
	Projection	125mm

Connections		copper tails
Gas Supply	-	22mm
Central Heating Flow	-	22mm
Central Heating Return	-	22mm
Cold Water Mains Inlet	-	15mm
DHW Flow	-	15mm
Pressure Relief Discharge	-	15mm

Outercase Dimensions	
Casing Height	- 780mm
Overall Height Inc Flue Elbow	- 965mm
Casing Width	- 450mm
Casing Depth	- 345mm

Clearances	
Above Casing	200 mm Min
	300mm Min (80/125)
Below Casing	200 mm Min
Front	450 mm Min (For Servicing)
Front	5 mm Min (In Operation)
L.H. Side	5 mm Min
R.H. Side	5 mm Min (In Operation)

Weights

Packaged Boiler Carton	54.7 kg
Installation Lift Weight	47.5 kg

NO_x Class 5

Central Heating Primary Circuit Pressures

	bar
Safety Discharge	3
Max Operating	2.5
Min Operating	0.5
Recommended Operating Range	1-2

DHW Circuit Pressures	bar
Max Operating	8
Min Operating	0.15

Flow Rates	**(25)** l/min	**(30)** l/min
DHW Flow Rate @ 30°C Rise	11.9	14.3
DHW Flow Rate @ 35°C Rise	10.2	12.3
Min Working DHW Flow Rate	2	2

IMPORTANT: Where Low Flow Taps or Fittings are intended to be used in the DHW system connected it is strongly recommended that the DHW flow rate DOES NOT fall below 2.5l/min. This will ensure reliable operation of the DHW function.

Pump
Available Head See graph below

Expansion Vessel - (For Central Heating only. Integral with appliance)

	bar
Min Pre-charge Pressure	0.5

	(25) litre	(30) litre
Max Capacity of CH System	125	155
Primary Water Content of Boiler (unpressurised)	3.1	3.1

Temperatures
C.H. Flow Temp (adjustable)
25°C to 80°C max (± 5°C)

D.H.W. Flow Temp (adjustable)
35°C to 60°C max (± 5°C)
dependent upon flow rate

NOTE: All data in this section are nominal values and subject to normal production tolerances.

SEDBUK (2005) Declaration

The efficiency is 91.0% (25)
90.1% (30)

This value is used in the UK Government's Standard Assessment Procedure (SAP 2005) for energy rating of dwellings. The test data from which it has been calculated has been certified by 0086.

Pump - Available Head

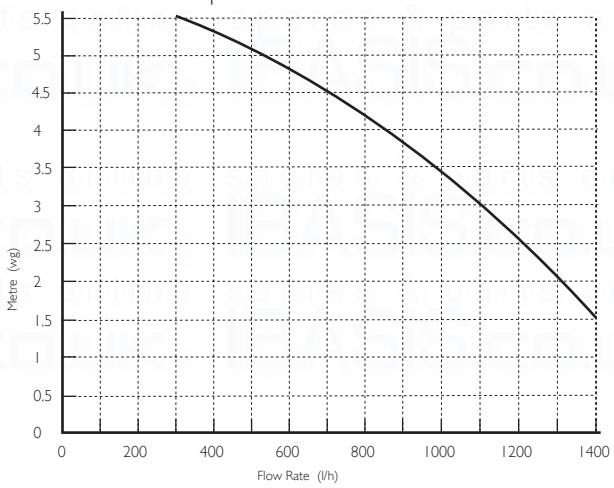

 © Baxi Heating UK Ltd 2012

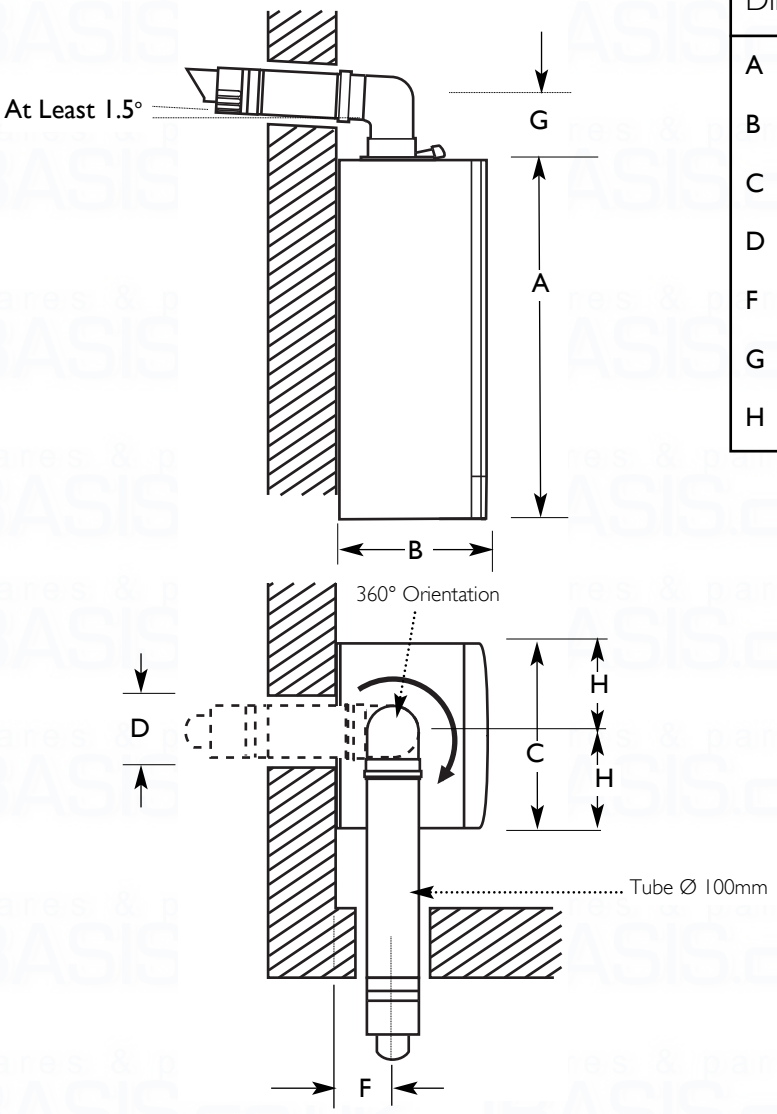

Dimensions	
A	780mm
B	345mm
C	450mm
D	116mm Ø Min.
F	145mm
G	132mm
H	225mm

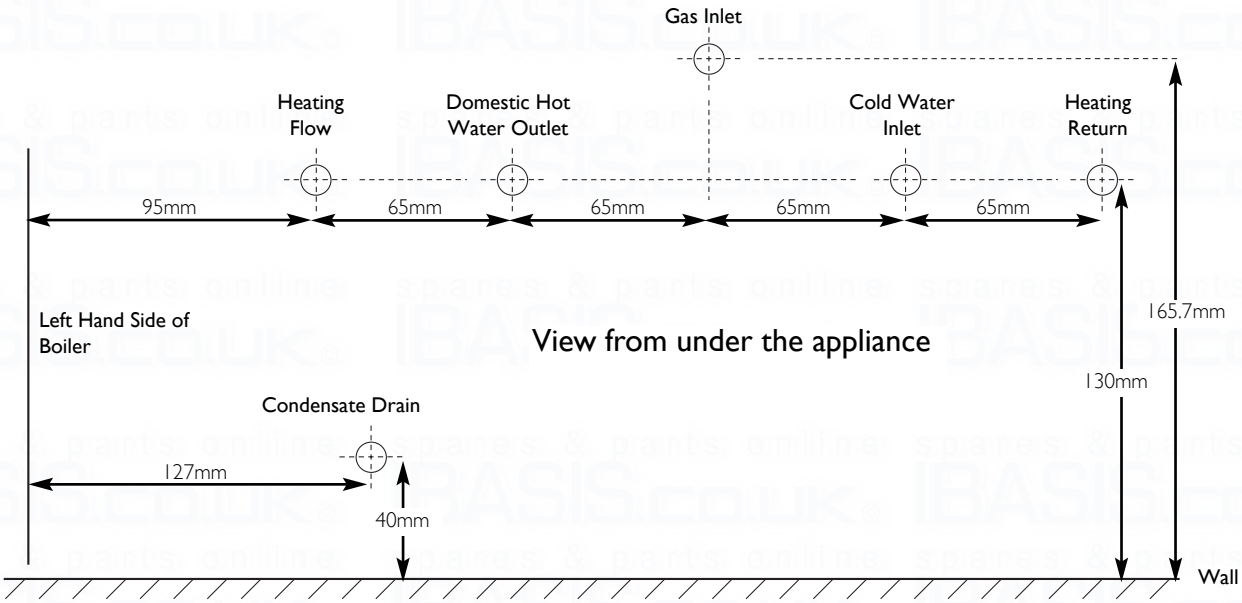

© Baxi Heating UK Ltd 2012

6.0 System Details

6.1 Information

1. The Potterton Apollo Condensing Combination Boiler is a 'Water Byelaws Scheme - Approved Product'.
To comply with the Water Byelaws your attention is drawn to the following installation requirements and notes (IRN).

a) IRN 001 - See text of entry for installation requirements and notes.

b) IRN 302 - Byelaw 14.

2. Reference to the WRc publications, 'Water fittings and materials directory' and 'Water supply byelaws guide' give full details of byelaws and the IRNs.

6.2 Central Heating Circuit

1. The appliance is suitable for fully pumped SEALED SYSTEMS ONLY.

Treatment of Water Circulating Systems

• All recirculatory water systems will be subject to corrosion unless an appropriate water treatment is applied. This means that the efficiency of the system will deteriorate as corrosion sludge accumulates within the system, risking damage to pump and valves, boiler noise and circulation problems.

• When fitting new systems flux will be evident within the system, which can lead to damage of system components.

• All systems must be thoroughly drained and flushed out using, for example, Sentinel X300 or X400 or Fernox F3. They should be used following the flushing agent manufacturer's instructions.

• System additives - corrosion inhibitors and flushing agents/descalers should comply to BS7593 requirements, e.g. Sentinel X100 and Fernox MB-1 which should be used following the inhibitor manufacturer's instructions.

• Full instructions are supplied with the products, for further information contact Sentinel (0800 389 4670) or Fernox (0870 870 0362)

Failure to flush and add inhibitor to the system will invalidate the appliance warranty.

• It is important to check the inhibitor concentration after installation, system modification and at every service in accordance with the manufacturer's instructions. (Test kits are available from inhibitor stockists.)

• For information or advice regarding any of the above contact Technical Enquiries.

6.3 Bypass

1. The boiler utilises the primary side of the DHW plate heat exchanger as an automatic integral bypass.

6.4 System Control

1. Further external controls (e.g. room thermostat) should be fitted to optimise the economical operation of the boiler.

 © Baxi Heating UK Ltd 2012

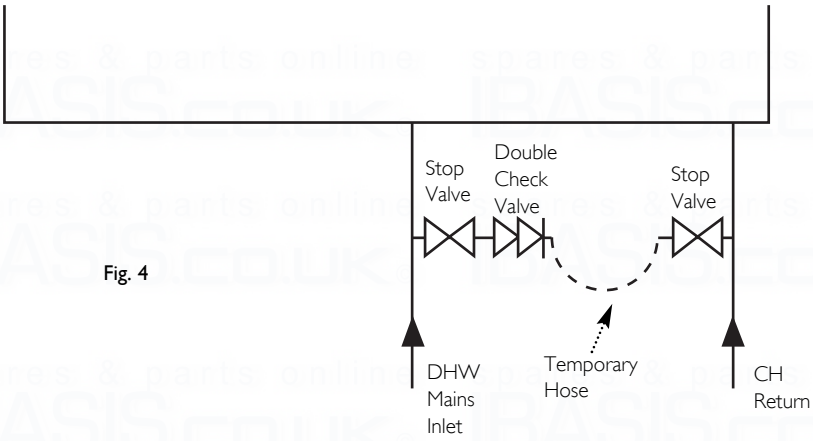

Fig. 4

6.5 System Filling and Pressurising (Fig. 4)

1. A filling point connection on the central heating return pipework must be provided to facilitate initial filling and pressurising and also any subsequent water loss replacement/refilling.

2. The filling method adopted must be in accordance with all relevant water supply regulations and use approved equipment.

3. Your attention is drawn to:
for GB: Guidance G24.2 and recommendation R24.2 of the Water Regulations Guide.
for IE: the current edition of I.S. 813 "Domestic Gas Installations".

4. The sealed primary circuits may be filled or replenished by means of a temporary connection between the circuit and a supply pipe, provided a 'Listed' double check valve or some other no less effective backflow prevention device is permanently connected at the inlet to the circuit and the temporary connection is removed after use.

6.6 Expansion Vessel (Central Heating only)

1. The appliance expansion vessel is pre-charged to 0.5 bar. Therefore, the minimum cold fill pressure is 0.5 bar. The vessel is suitable for correct operation for system capacities up to 125 litres (25) 155 litres (30). For greater system capacities an additional expansion vessel must be fitted. For GB refer to BS 7074 Pt 1. For IE, the current edition of I.S. 813 "Domestic Gas Installations".

6.7 Safety Pressure Relief Valve (Fig. 6)

1. The pressure relief valve is set at 3 bar, therefore all pipework, fittings, etc. should be suitable for pressures in excess of 3 bar and temperature in excess of 100°C.

2. The pressure relief discharge pipe should be not less than 15mm dia, run continuously downward, and discharge outside the building, preferably over a drain. It should be routed in such a manner that no hazard occurs to occupants or causes damage to wiring or electrical components. The end of the pipe should terminate facing down and towards the wall.

3. The discharge must not be above a window, entrance or other public access. Consideration must be given to the possibility that boiling water/steam could discharge from the pipe.

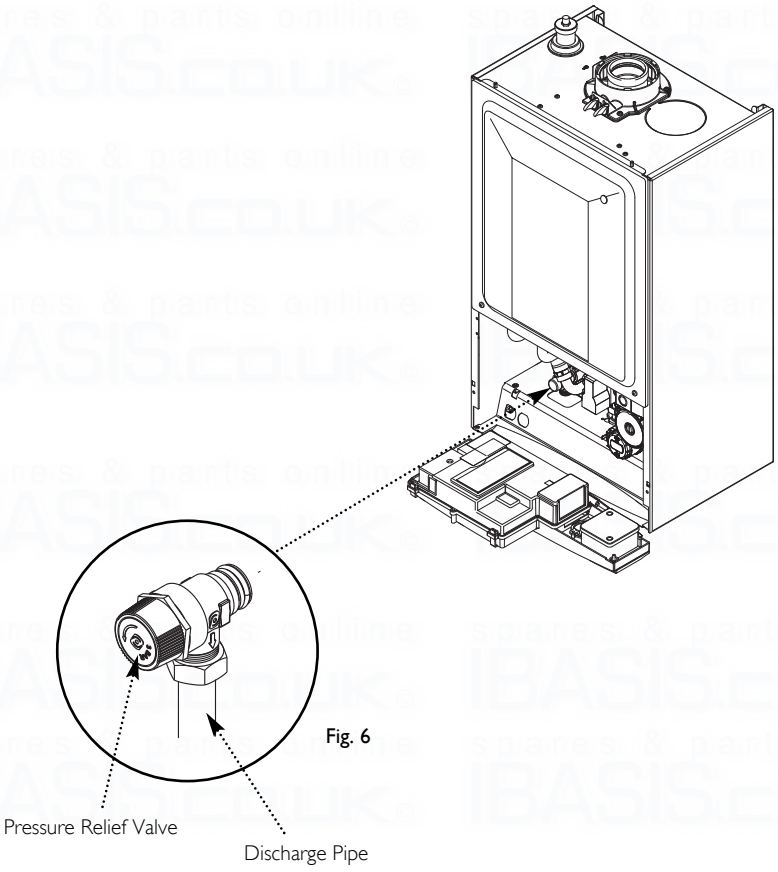

Fig. 6

© Baxi Heating UK Ltd 2012

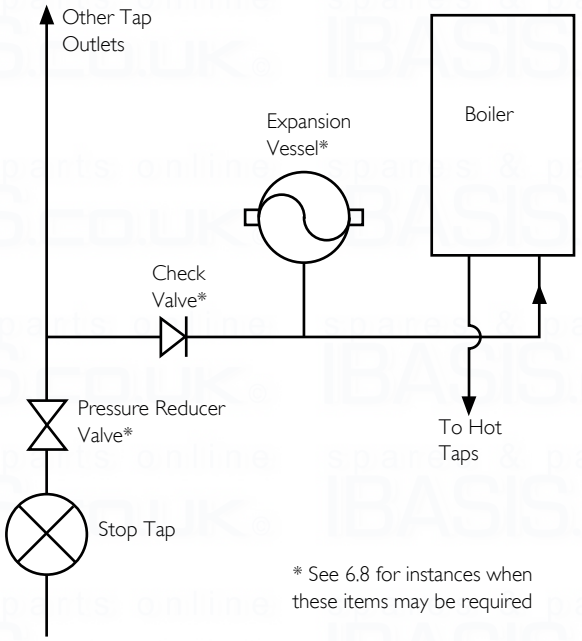

Fig. 7

6.8 Domestic Hot Water Circuit (Fig. 7)

1. All DHW circuits, connections, fittings, etc. should be fully in accordance with relevant standards and water supply regulations.

2. Your attention is drawn to:
for GB: Guidance G17 to G24 and recommendation R17 to R24 of the Water Regulations Guide.
for IE: the current edition of I.S. 813 "Domestic Gas Installations".

3. The Water Regulations recommendations for England and Wales prohibits backflow from appliances into the wholesome water supply due to thermal expansion. However this type of instantaneous combination boiler, with less than 15 litres of stored capacity, does not require any backflow prevention device as any thermal expansion is accommodated within the appliance.
It is possible in certain circumstances that other cold water demands (e.g. washing machines, flushing of W.C.s) may affect the DHW function of the boiler. In these instances the fitting of a backflow prevention device and expansion vessel is recommended.

4. Also if there is an existing check valve, loose jumpered stop cock, water meter or water treatment device already fitted to the wholesome water supply connected to the boiler domestic hot water (DHW) inlet supply then a suitable expansion device may be required.

5. If the hot water expansion is not provided for, then high pressures can develop which may result in damage to fittings and devices on the system.

6. The boiler's maximum working mains pressure is 8 bar, therefore all pipework, connections, fittings, etc. should be suitable for pressures in excess of 8 bar. A pressure reducing valve must be fitted for pressures in excess of 8 bar. The manufacturer of any outlet fittings, such as a shower valve, may require a lower maximum pressure. The pressure reduction must take account of all fittings connected to the DHW system.

6.9 Showers

1. If a shower control is supplied from the appliance it should be of the thermostatic or pressure balanced type. Thermostatic type shower valves provide the best comfort and guard against water at too high a temperature. Existing controls may not be suitable - refer to the shower valve manufacturer.

6.10 Hard Water Areas

1. If the area of the installation is recognised as a HARD WATER AREA then a suitable device should be fitted to treat the mains water supply to the boiler. Contact your Water Distribution Company for advice on suitable devices.

 © Baxi Heating UK Ltd 2012

7.0 Site Requirements

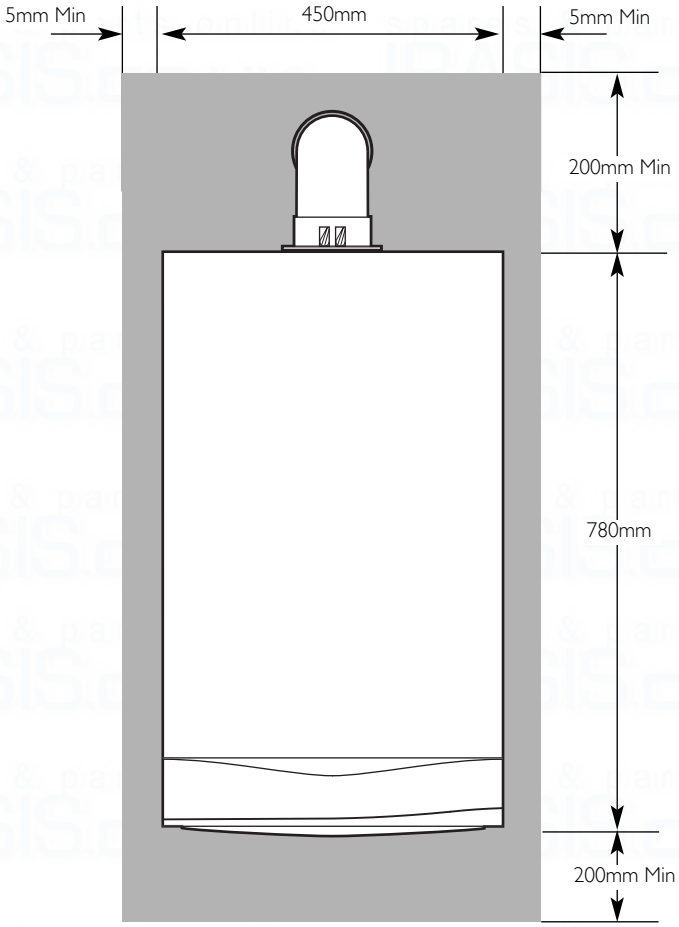

Fig. 8

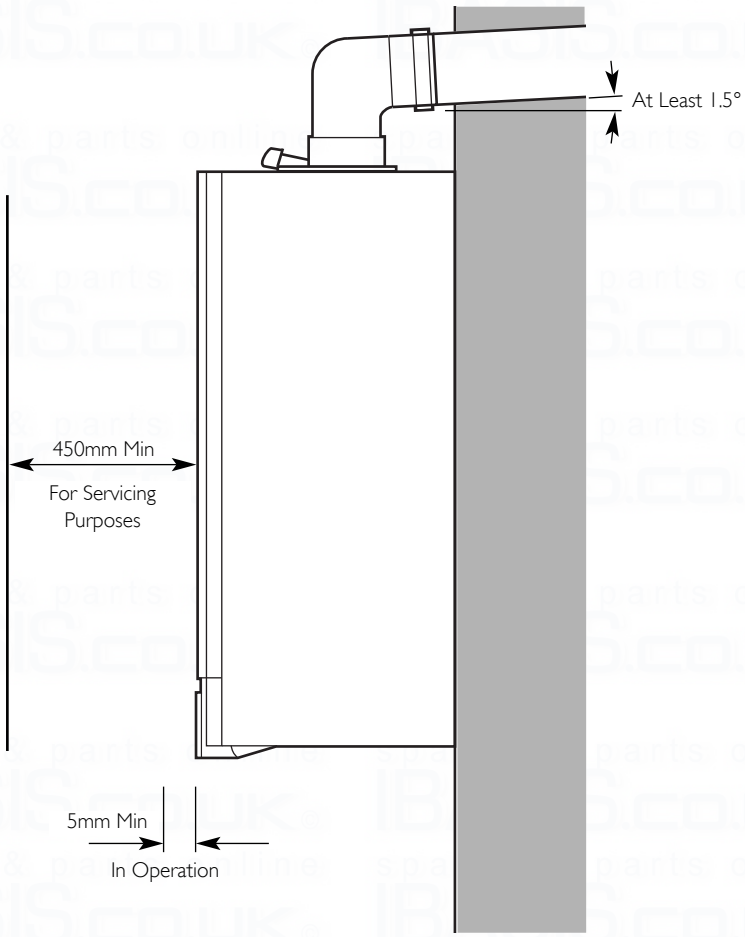

Fig. 9

7.1 Location

1. The boiler may be fitted to any suitable wall with the flue passing through an outside wall or roof and discharging to atmosphere in a position permitting satisfactory removal of combustion products and providing an adequate air supply. The boiler should be fitted within the building unless otherwise protected by a suitable enclosure i.e. garage or outhouse. (The boiler may be fitted inside a cupboard-see Section 7.3).

2. If the boiler is sited in an unheated enclosure then it is recommended to leave the ON/OFF Selector Switch in the domestic hot water and central heating position to give frost protection.

3. If the boiler is fitted in a room containing a bath or shower reference must be made to the relevant requirements.
In GB this is the current I.E.E. Wiring Regulations and Building Regulations.
In IE reference should be made to the current edition of I.S. 813 "Domestic Gas Installations" and the current ETCI rules.

4. If the boiler is to be fitted into a building of timber frame construction then reference must be made to the current edition of Institute of Gas Engineers Publication IGE/UP/7 (Gas Installations in Timber Framed Housing).

7.2 Clearances (Figs. 8 & 9)

1. A flat vertical area is required for the installation of the boiler.

2. These dimensions include the necessary clearances around the boiler for case removal, spanner access and air movement. Additional clearances may be required for the passage of pipes around local obstructions such as joists running parallel to the front face of the boiler.

© Baxi Heating UK Ltd 2012

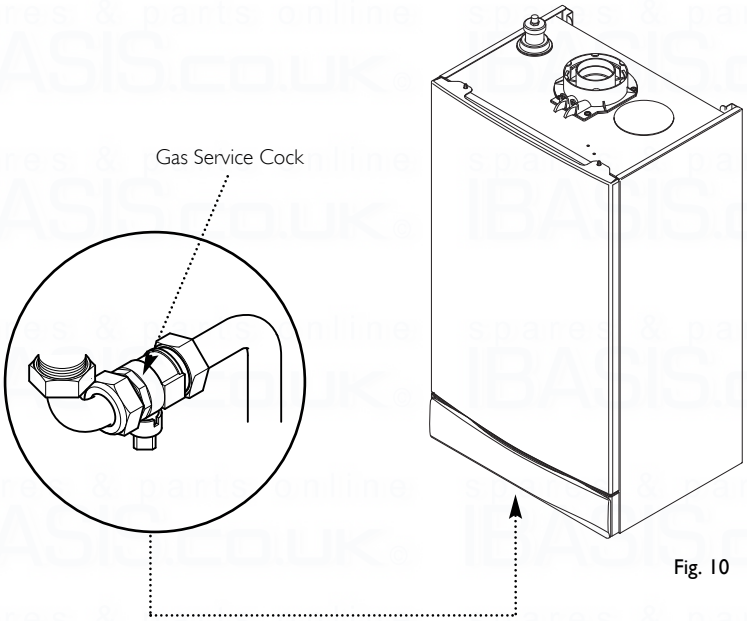

Fig. 10

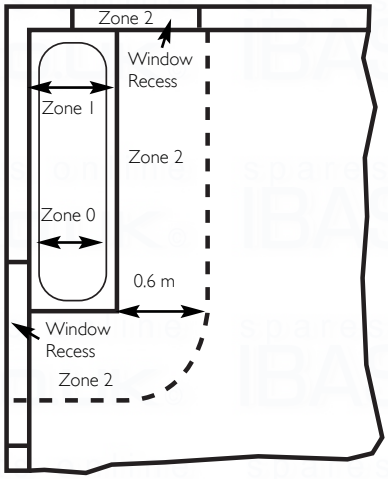

Fig. 11 In GB Only

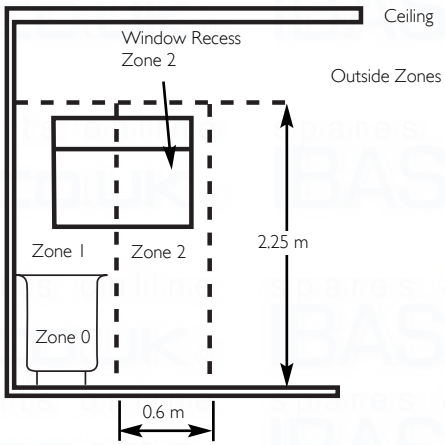

Fig. 12 In GB Only

7.0 Site Requirement

7.3 Ventilation of Compartments

1. Where the appliance is installed in a cupboard or compartment, no air vents are required.

2. BS 5440: Part 2 refers to room sealed appliances installed in compartments. The appliance will run sufficiently cool without ventilation.

7.4 Gas Supply

1. The gas installation should be in accordance with the relevant standards. In GB this is BS 6891. In IE this is the current edition of I.S. 813 "Domestic Gas Installations".

2. The connection to the appliance is a 22mm copper tail located at the rear of the gas service cock (Fig. 10).

3. Ensure that the pipework from the meter to the appliance is of adequate size. **Do not use pipes of a smaller diameter than the boiler gas connection (22mm).**

7.5 Electrical Supply

1. External wiring must be correctly earthed, polarised and in accordance with relevant regulations/rules. In GB this is the current I.E.E. Wiring Regulations. In IE reference should be made to the current edition of ETCI rules.

2. The mains supply is 230V ~ 50H_Z fused at 3A.

NOTE: The method of connection to the electricity supply must facilitate complete electrical isolation of the appliance.

Connection may be via a fused double-pole isolator with a contact separation of at least 3mm in all poles and servicing the boiler and system controls only.

7.6 Bath & Shower Rooms

1. If the boiler is fitted in a room containing a bath or shower and **NOT FITTED** with any optional integral timer or thermostat, it can be fitted in zone 2, (Figs. 11 & 12 shows zone dimensions for a bathtub. For other examples refer to the Current I.E.E. Wiring Regulations) reference must be made to the relevant requirements.
In GB this is the current I.E.E. Wiring Regulations and Building Regulations.
In IE reference should be made to the current edition of I.S. 813 "Domestic Gas Installations" and the current ETCI rules.

 © Baxi Heating UK Ltd 2012

Examples are shown of the following methods of termination:-
i) to an internal soil & vent pipe
ii) via an internal discharge branch (e.g. sink waste) downstream of the trap
iii) to a drain or gully
iv) to a purpose made soakaway
v) pumped into an internal discharge branch (e.g. sink waste) downstream of the trap
vi) pumped into an external soil & vent pipe
vii) to a drain or gully with extended external run & trace heating

It is strongly recommended to discharge internally into the household drainage system. If connecting to a rain water drain, that drain MUST discharge into a foul drain.

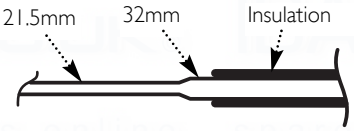

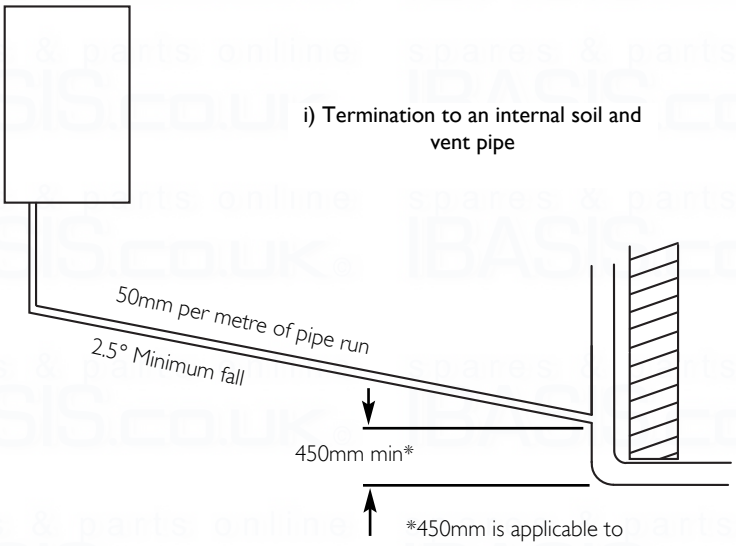

i) Termination to an internal soil and vent pipe

*450mm is applicable to properties up to 3 storeys. For multi-storey building installations consult BS 6798.

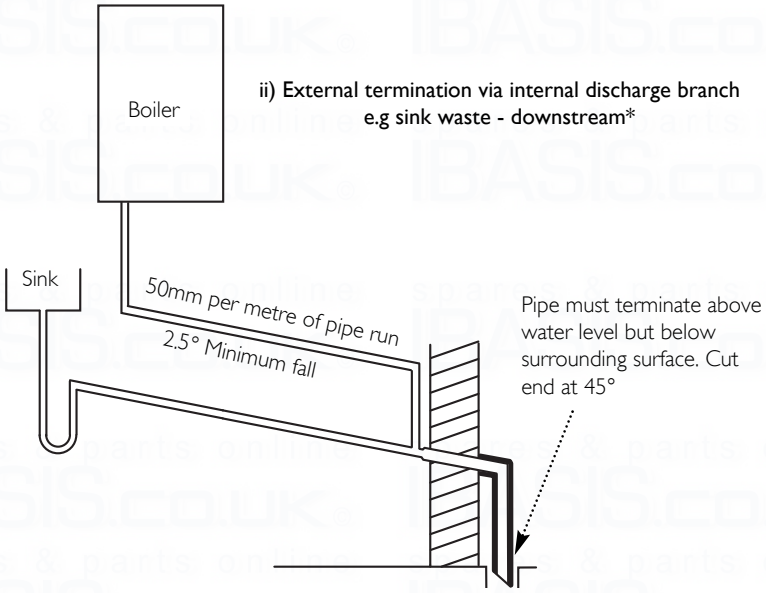

ii) External termination via internal discharge branch e.g sink waste - downstream*

*It is NOT RECOMMENDED to connect upstream of the sink or other waste water receptacle !

7.0 Site Requirements

7.7 Condensate Drain

FAILURE TO INSTALL THE CONDENSATE DISCHARGE PIPEWORK CORRECTLY WILL AFFECT THE RELIABLE OPERATION OF THE BOILER.

CAREFUL CONSIDERATION MUST BE GIVEN TO THE POSSIBILITY OF THE PIPEWORK BEING SUBJECT TO FREEZING CONDITIONS AND APPROPRIATE MEASURES TAKEN TO PREVENT BLOCKAGE. CORRECT INSTALLATION IN ACCORDANCE WITH THIS SECTION WILL CONSIDERABLY MINIMISE THE LIKELIHOOD OF BLOCKAGE AND SUBSEQUENT BOILER LOCK-OUT.

A CONDENSATE DISCHARGE PUMP AND PIPE 'TRACE HEATING' ARE AVAILABLE AS ACCESSORIES - see paragraphs 7.7.12 to 7.715 for further details.

The condensate discharge pipe MUST NOT RISE at any point along its length. There MUST be a fall of AT LEAST 2.5° (50mm per metre) along the entire run EXCEPT when employing a suitable condensate pump in basement and cellar or similar applications.

The boiler condensate trap incorporates a seal of 75mm, therefore it is unnecessary to install an air break and trap in the discharge pipework.

1. The condensate outlet will accept 21.5mm (3/4in) plastic overflow pipe. **It is strongly recommended that this discharges internally into the household drainage system**. Where this is not possible, discharge into an outside drain is permissible providing every possible precaution is taken to prevent freezing.

2. Ensure the discharge of condensate complies with any national or local regulations in force. **BS 6798 & Part H1 of the Building Regulations give further detailed guidance.**

3. The discharge pipe should be run in a proprietary drain pipe material e.g. PVC, PVC-U, ABS, PVC-C or PP.

4. Metal pipework is NOT suitable for use in condensate discharge systems.

5. The pipe should be a minimum of 21.5mm diameter and must be supported using suitably spaced clips of the correct design to prevent sagging.

6. **It is advisable that the full length of condensate pipe is run internally and preferably be less than 3 metres.**

7. **Internal runs greater than 3 metres or runs in cold areas should use 32mm waste pipe.**

8. **External runs MUST be a MINIMUM of 32mm and fully insulated with material suitable for external use.**

9. If the boiler is fitted in an unheated location the entire condensate discharge pipe should be treated as an external run and sized and insulated accordingly.

10. In all cases discharge pipe must be installed to aid disposal of the condensate. To reduce the risk of condensate being trapped, as few bends and fittings as possible should be used and any burrs on cut pipe removed.

© Baxi Heating UK Ltd 2012

7.7 Condensate Drain (cont.)

11. When discharging condensate into a soil stack or waste pipe the effects of existing plumbing must be considered. If soil pipes or waste pipes are subjected to internal pressure fluctuations when WC's are flushed or sinks emptied then back-pressure may force water out of the boiler trap and cause appliance lockout.

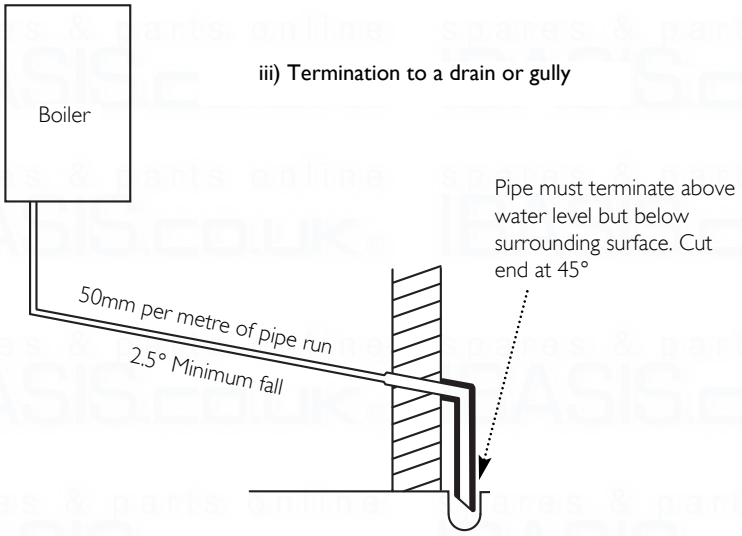

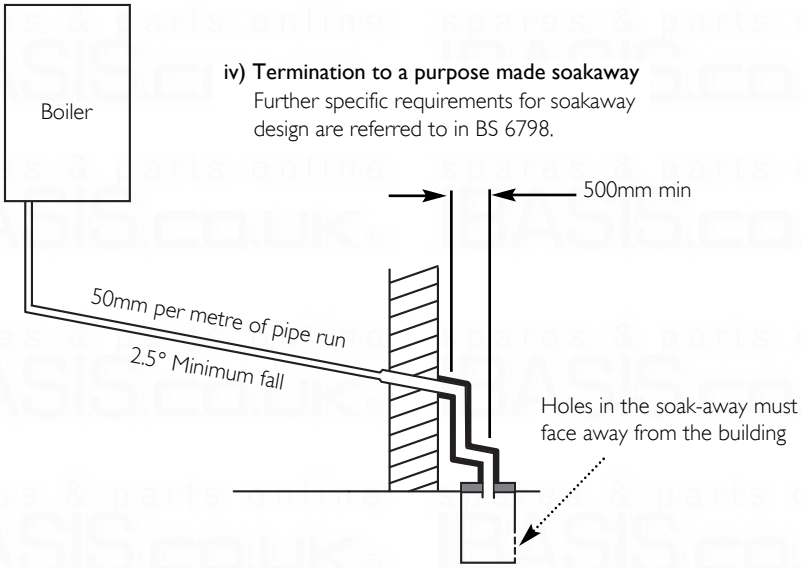

 © Baxi Heating UK Ltd 2012

v) pumped into an internal discharge branch (e.g. sink waste) downstream of the trap

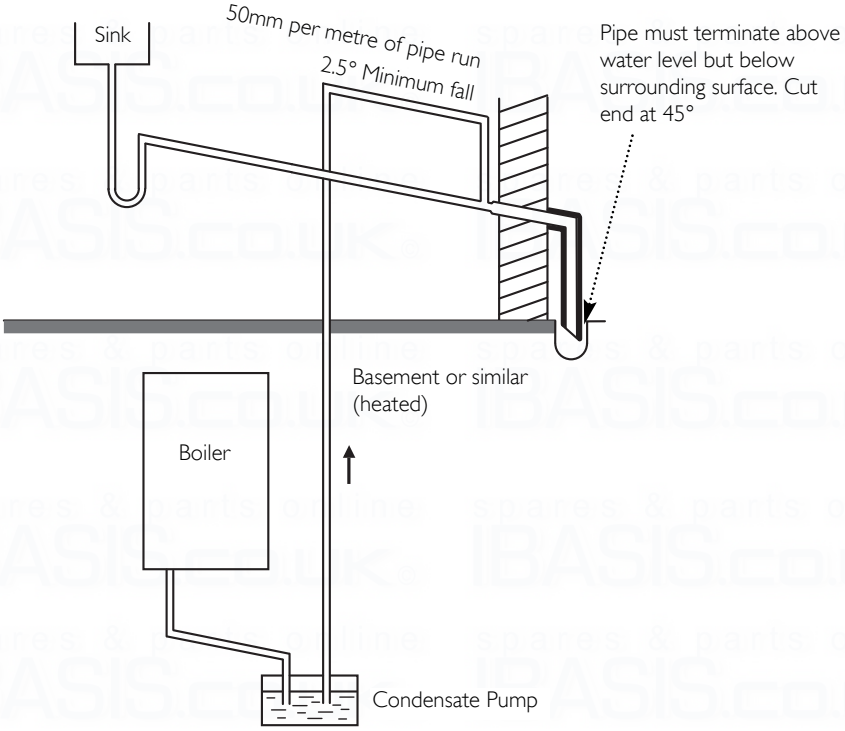

7.7 Condensate Drain (cont.)

12. A boiler discharge pump is available, 'MULTIFIT' part no. 720648301. This pump will dispose of both condensate & high temperature water from the relief valve. It has a maximum head of 5 metres. Follow the instructions supplied with the pump.

13. Condensate Drain Pipe 'Trace Heating' Elements are available in various lengths. 'MULTIFIT' part nos.:-

1 metre 720644401
2 metre 720664101
3 metre 720664201
5 metre 720664401*

*Where the drain is between 3 & 5 metres a 5 metre kit can be used and "doubled back" upon itself.

14. It is possible to fit the element externally on the condensate drain or internally as detailed in the instructions provided.

15. The fitting of a 'Trace Heating' Element is NOT a substitute for correct installation of the condensate drain. ALL requirements in this section must still be adhered to.

vi) pumped into an external soil & vent pipe

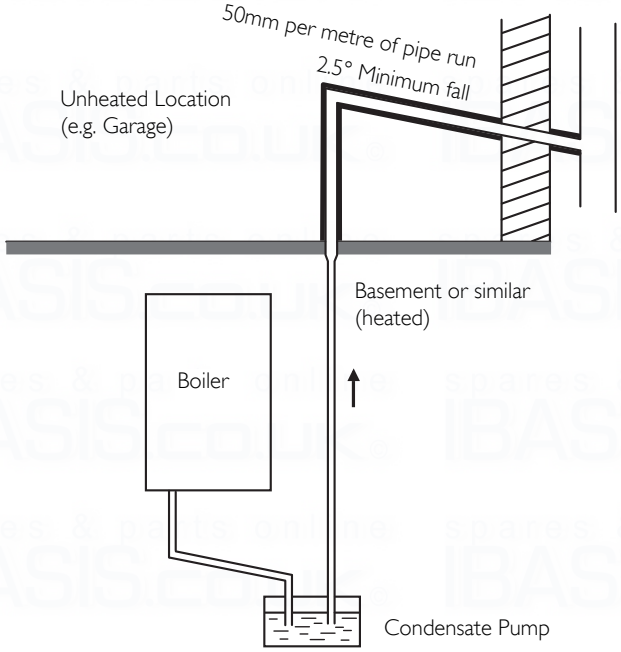

vii) to a drain or gully with extended external run & trace heating

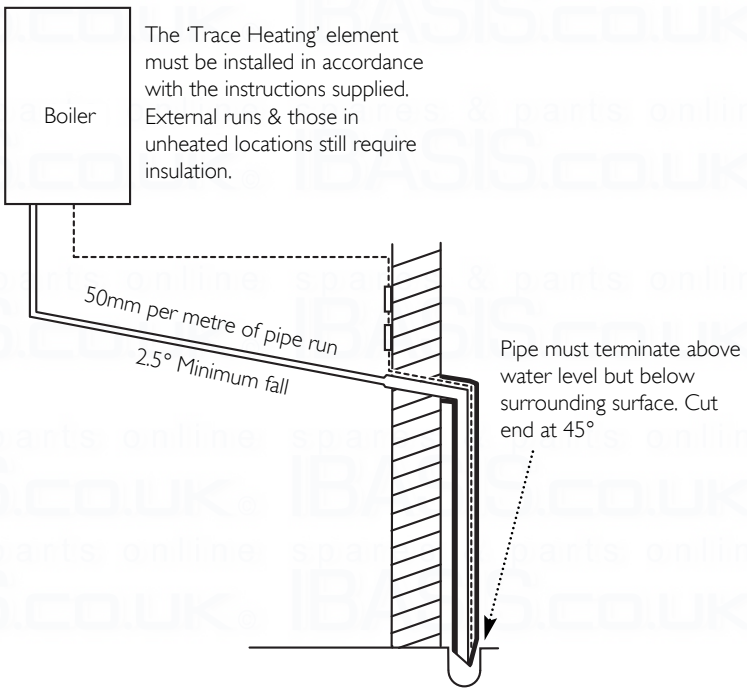

© Baxi Heating UK Ltd 2012

Terminal Position with Minimum Distance (Fig. 18)		(mm)
A[1]	Directly below an opening, air brick, opening windows, etc.	300
B[1]	Above an opening, air brick, opening window etc.	300
C[1]	Horizontally to an opening, air brick, opening window etc.	300
D[2]	Below gutters, soil pipes or drain pipes.	25 (75)
E[2]	Below eaves.	25 (200)
F[2]	Below balconies or car port roof.	25 (200)
G[2]	From a vertical drain pipe or soil pipe.	25 (150)
H[2]	From an internal or external corner.	25 (300)
I	Above ground, roof or balcony level.	300
J	From a surface or boundary line facing a terminal.	600
K	From a terminal facing a terminal (Horizontal flue).	1200
	From a terminal facing a terminal (Vertical flue).	600
L	From an opening in carport (e.g. door, window) into the dwelling.	1200
M	Vertically from a terminal on the same wall.	1500
N	Horizontally from a terminal on the same wall.	300
R	From adjacent wall to flue (vertical only).	300
S	From an adjacent opening window (vertical only).	1000
T	Adjacent to windows or openings on pitched and flat roofs	600
U	Below windows or openings on pitched roofs	2000

[1] In addition, the terminal should be no nearer than 150 mm to an opening in the building fabric formed for the purpose of accommodating a built-in element such as a window frame.

[2] Only **ONE** 25mm clearance is allowed per installation. If one of the dimensions D, E, F, G or H is 25mm then the remainder **MUST** be as shown in brackets, in accordance with B.S.5440-1.

NOTE: The distance from a fanned draught appliance terminal installed parallel to a boundary may not be less than 300mm in accordance with the diagram below

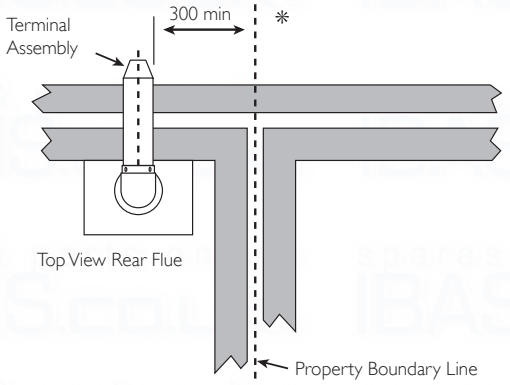

Fig. 17

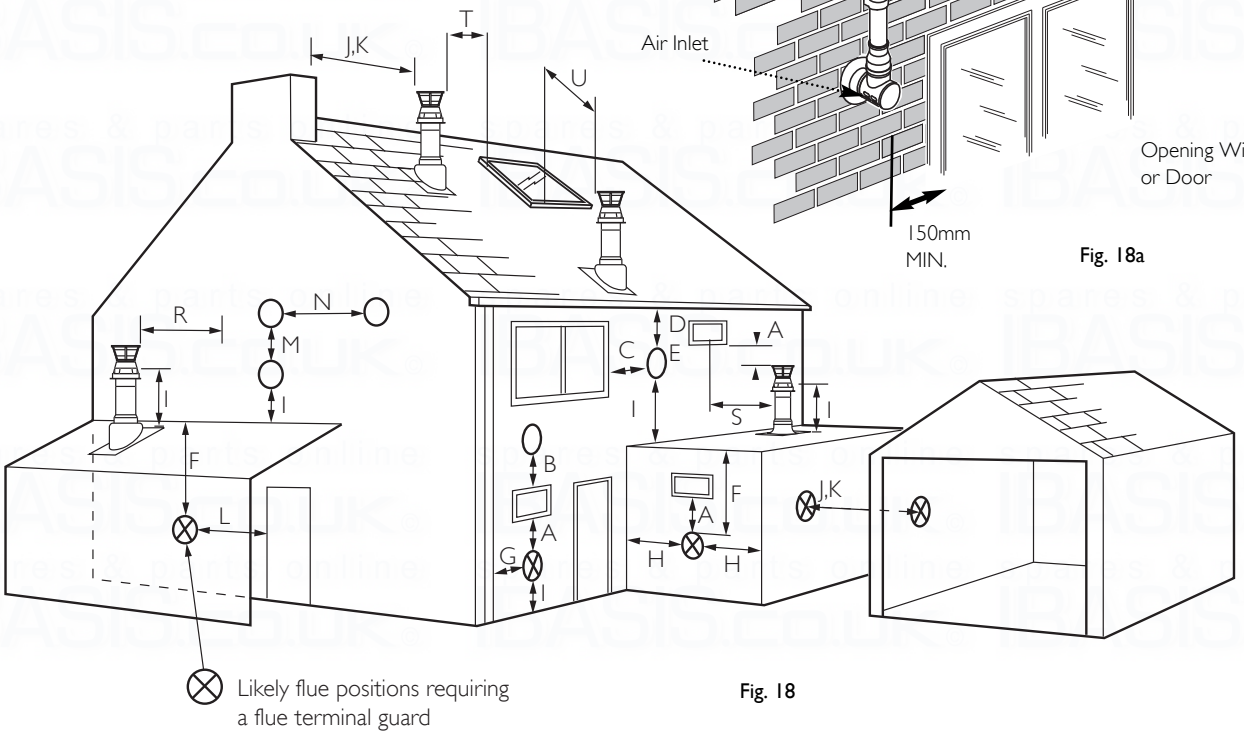

Fig. 18

7.0 Site Requirements

7.8 Flue (Figs. 17 & 18)

NOTE: Due to the nature of the boiler a plume of water vapour will be discharged from the flue. This should be taken into account when siting the flue terminal.

1. The following guidelines indicate the general requirements for siting balanced flue terminals. For GB recommendations are given in BS 5440 Pt 1. For IE recommendations are given in the current edition of I.S. 813 "Domestic Gas Installations".

2. If the terminal discharges onto a pathway or passageway, check that combustion products will not cause a nuisance and that the terminal will not obstruct the passageway.

3. If a terminal is less than 2 metres above a balcony, above ground or above a flat roof to which people have access, then a suitable terminal guard must be provided.

IMPORTANT:
- Under car ports we recommend the use of the plume displacement kit.
- The terminal position must ensure the safe and nuisance - free dispersal of combustion products.

*4. Reduction to the boundary is possible down to 25mm but flue deflector part no. 5111068 must be used.

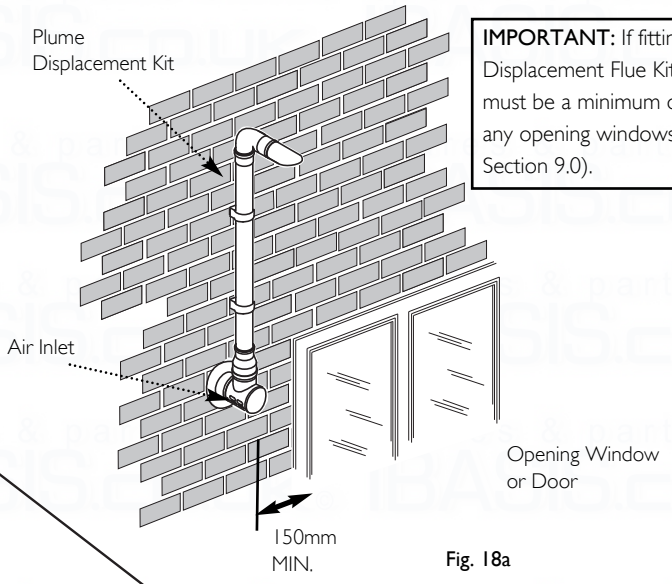

Fig. 18a

IMPORTANT: If fitting a Plume Displacement Flue Kit, the air inlet must be a minimum of 150mm from any opening windows or doors (see Section 9.0).

© Baxi Heating UK Ltd 2012

8.0 Flue Options

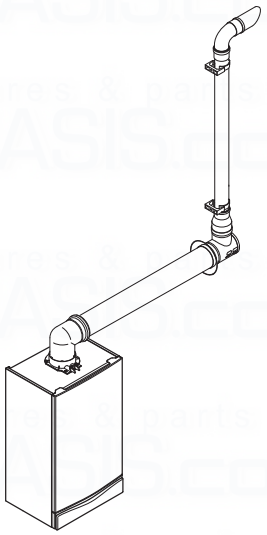

Plume Displacement Kit 60 /100 Ø
1M Extensions, 45° & 93° elbows are also available - see Section 9.0

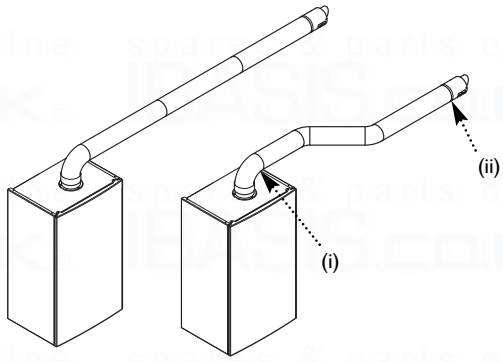

Horizontal Flues

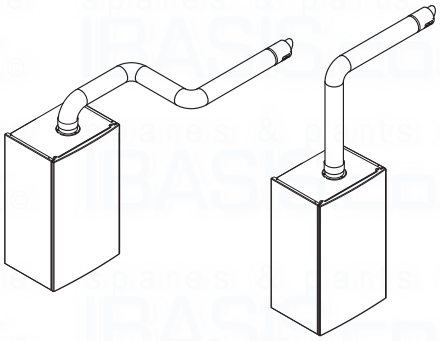

8.1 Horizontal Flue Systems

1. The standard flue is suitable only for horizontal termination applications.

2. Maximum permissible equivalent flue lengths are:-

Horizontal Concentric	10 metres

3. Any additional "in line" bends in the flue system must be taken into consideration.
Their equivalent lengths are:-

Concentric Pipes:	135° bend	0.5 metres
	93° bend	1.0 metres

The elbow supplied with the standard horizontal telescopic flue kit is not included in any equivalent length calculations

NOTE: Flue length is measured from point (i) to (ii) as shown.

IMPORTANT: All flue systems must be securely supported at least once every metre. Suitable pipe supports are available as accessories.

NOTE: Horizontal flue pipes should always be installed with at least a 1.5° fall from the terminal to allow condensate to run back to the boiler.

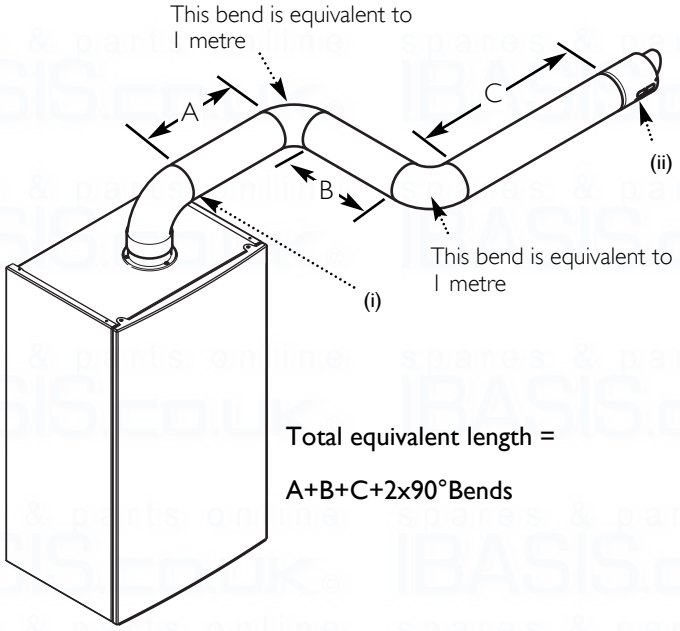

Total equivalent length =

A+B+C+2x90°Bends

© Baxi Heating UK Ltd 2012

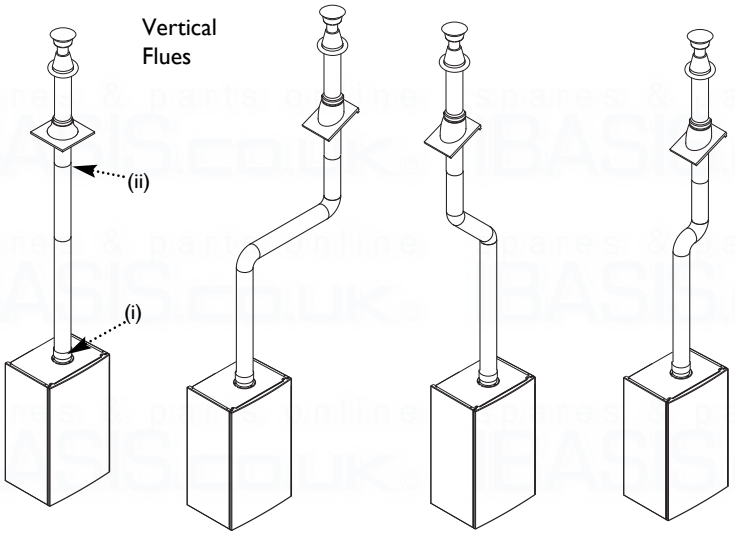

IMPORTANT: All flue systems must be securely supported at least once every metre. Suitable pipe supports are available as accessories.

8.0 Flue Options

8.2 Vertical Flue Systems

1. Maximum permissible equivalent flue lengths are:-

Vertical Concentric	10 metres

2. Any additional "in line" bends in the flue system must be taken into consideration.
Their equivalent lengths are:-

Concentric Pipes:	135° bend	0.5 metres
	93° bend	1.0 metres

3. The elbow supplied with the standard horizontal telescopic flue kit is not included in any equivalent length calculations

NOTE: Flue length is measured from point (i) to (ii) as shown.

Total Equivalent Length = A+B+C+1x90°Bend

All vertical and angled runs must be included, measured from the boiler adaptor (point i) to the joint with the flue terminal (point ii). One 91.5° bend or two 135° bends can be included without reduction of the flue length.

If further elbows are required the flue length must be reduced by the following amounts:-

1 metre for each 91.5° bend
0.5 metre for each 135° bend

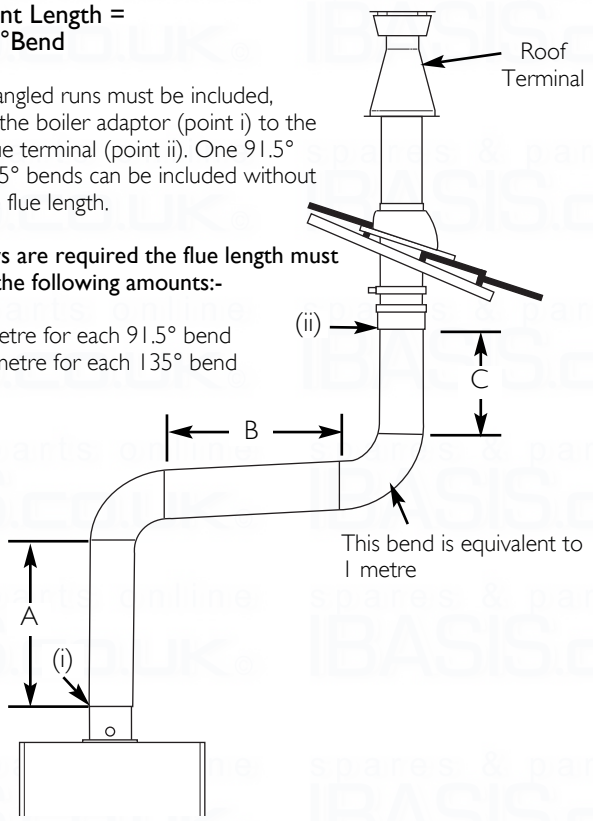

 © Baxi Heating UK Ltd 2012

8.0 Flue Options

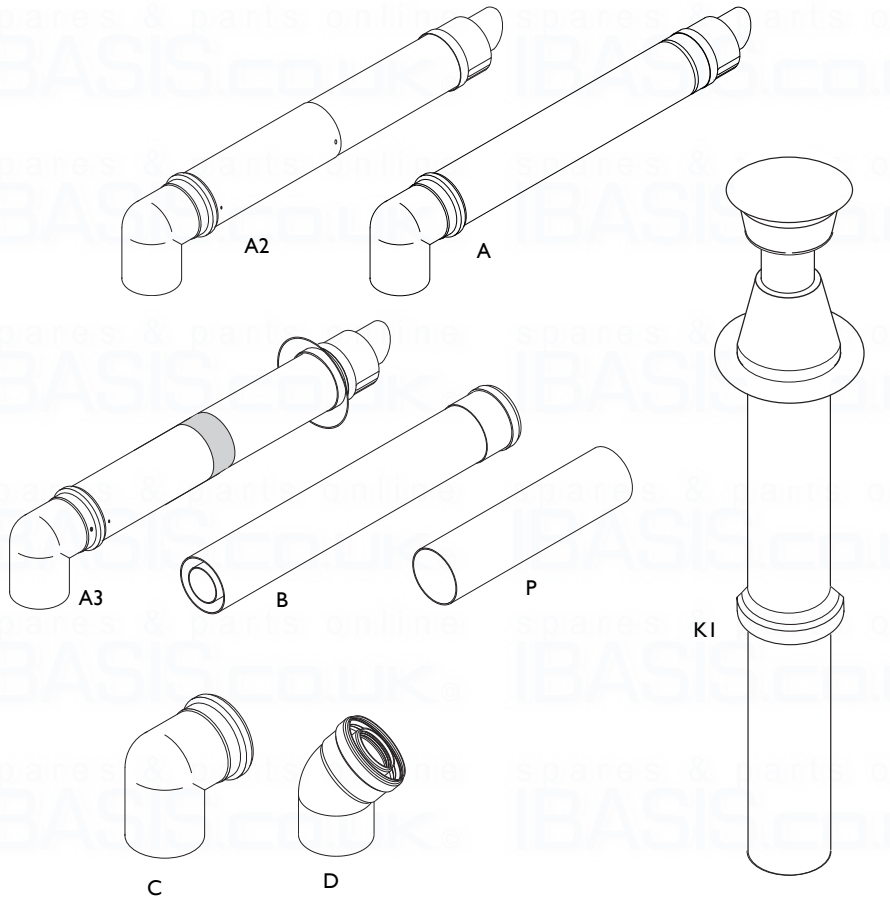

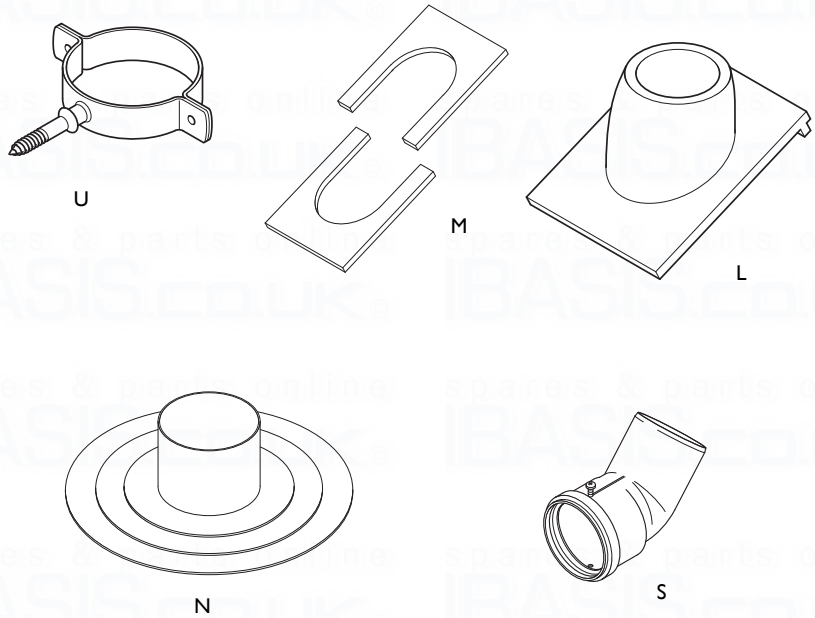

8.3 Flue Accessories

Key	Accessory	Size	Code No
FLUE GROUP A			
Concentric Flue System 100mm diameter			
A3	Telescopic Internal Flue Kit	315-500mm	5119654
A2	Telescopic Flue (incl elbow)		5118069
A	Horizontal Flue Terminal (incl elbow)		5118489
B	Flue Extension	1000mm	5111074
C	Flue Bend	93°	5111075
D	Flue Bend (pair)	135°	5111085
U	Pipe Support (painted)	100mmØ	5111080
P	Wall Liner		5111067
S	Flue Terminal Deflector		5111068
Vertical Flue Kits			
K1	Vertical Flue Terminal		5118576
L	Pitch Roof Flashing	25°/50°	5122151
M	Roof Cover Plate		246143
N	Flat Roof Flashing		246144

© Baxi Heating UK Ltd 2012

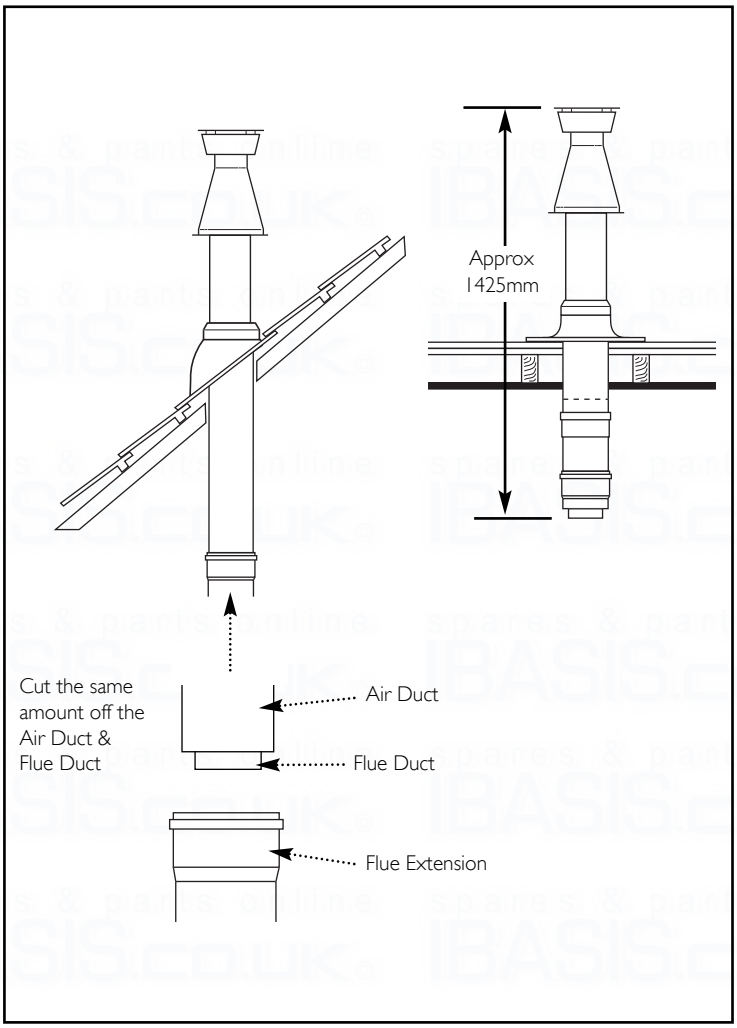

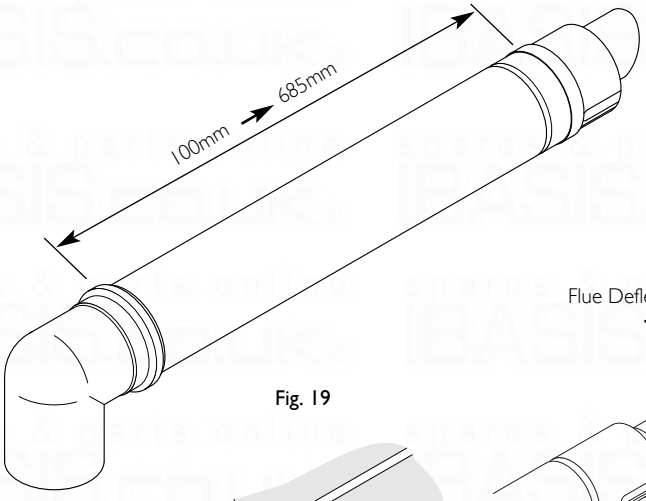

Fig. 19

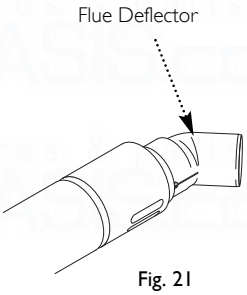

Fig. 21

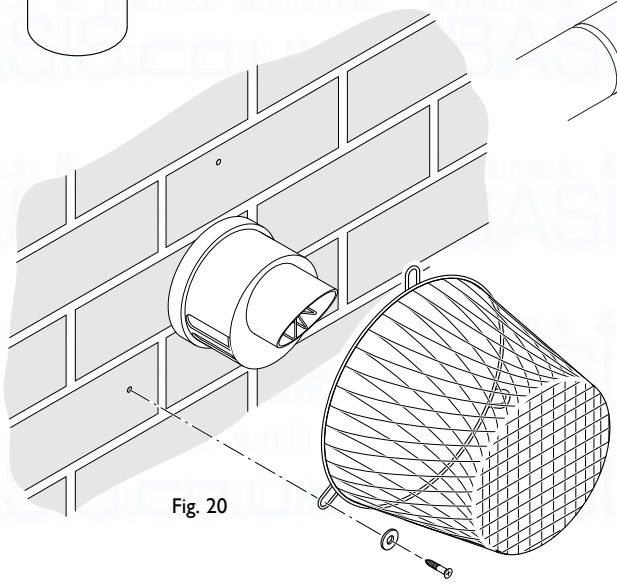

Fig. 20

8.0 Flue Options

8.4 For Roof Terminals

1. In the case of a pitched roof 25 - 50 degrees, position the lead tile to replace/flash over existing roof tiling. Make an aperture in the roof suitable for the lower tube of the roof terminal and ensure the integrity of the roof cover is maintained. The adjustable plastic collar can either be positioned on the lead tile or the lower tube of the roof terminal prior to the final positioning of the vertical flue through the tile. Check the collar is correctly located to suit required roof pitch (either 25° to 38° or 37° to 50°). From inside the roof adjust the flue to a vertical position and secure to the roof structure with the clamp supplied.

2. For flat roof installations the aluminium flashing must be incorporated into the roof covering and the appropriate aperture made in the roof decking. The vertical flue is lowered onto the flashing making sure the collar of the flue locates securely with the flashing. (A mastic seal may be necessary). From inside the roof, adjust the flue to a vertical position and secure to the roof structure with the clamp supplied.

IMPORTANT: If the boiler is not fitted immediately after the flue system, temporary precautions must be taken to prevent rain entry into the room of installation. Any precautionary measures must be removed prior to commissioning the boiler.

8.5 Flue Dimensions

The standard horizontal flue kit allows for lengths between 100mm and 685mm from elbow to terminal (Fig. 19).

The maximum permissible equivalent flue length is: 10 metres

8.6 Flue Trim

1. The rubber flue trim supplied may be fitted to either the outside wall or on the inner wall of installation.

8.7 Terminal Guard (Fig. 20)

1. When codes of practice dictate the use of terminal guards, they can be obtained from most Plumbers' and Builders' Merchants.

2. There must be a clearance of at least 50mm between any part of the terminal and the guard.

3. When ordering a terminal guard, quote the appliance name and model number.

4. The flue terminal guard should be positioned centrally over the terminal and fixed as illustrated.

8.8 Flue Deflector (Fig. 21)

1. If required, push the flue deflector over the terminal end and rotate to the optimum angle for deflecting plume. Secure the deflector to the terminal with screws provided.

 © Baxi Heating UK Ltd 2012

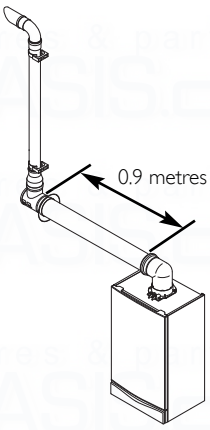

Fig. 22

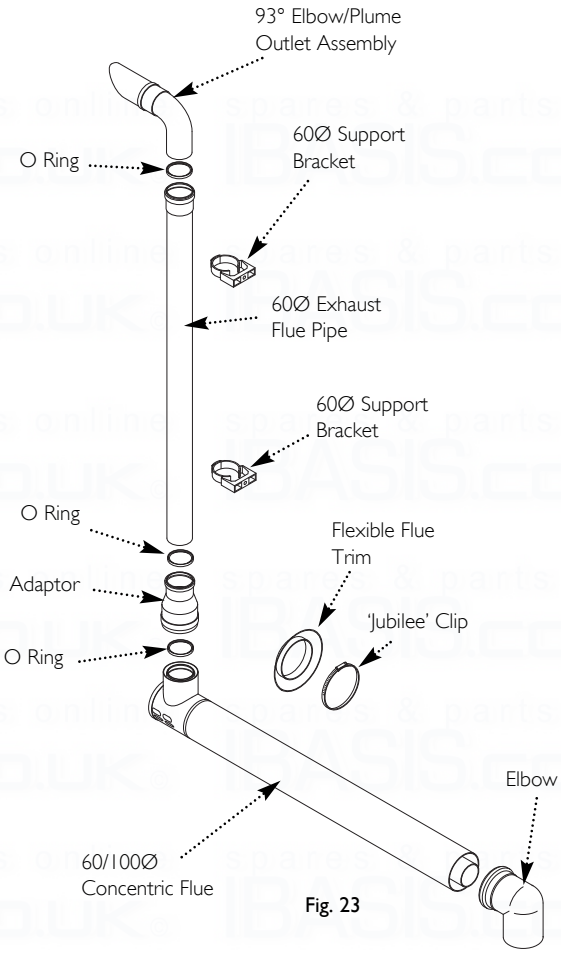

Fig. 23

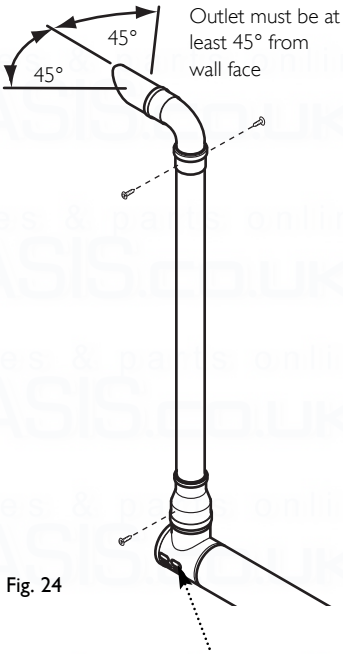

Fig. 24

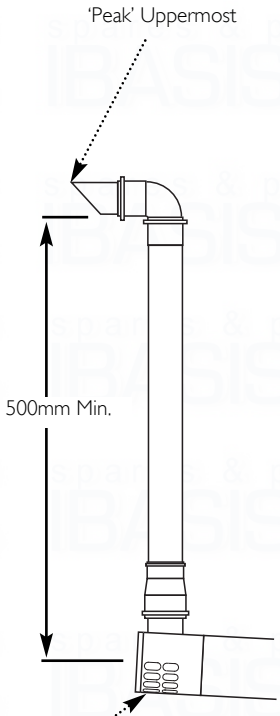

Fig. 25

9.0 Plume Displacement

9.1 Plume Displacement Kit (Fig. 23)

FLUE GROUP K
Kit No 5118638
Content of kit

- 1 0.9m 60/100 Concentric Flue
- 1 1m 60 Dia Exhaust Flue Pipe
- 1 Adaptor
- 2 60 Dia Support Brackets
- 1 93° Elbow/Plume Outlet Assembly
- 1 Flexible Flue Trim
- 3 "O" Rings
- 1 'Jubilee' Clip
- 1 Elbow

1. This kit is recommended for installations where the condensate plume emitted from the flue may cause a nuisance or affect the surroundings.

2. The terminal must be positioned outside the building with the air inlet facing downward and outlet connection upwards.

3. The plume outlet must always be at least 45° to the wall, with the 'peak' uppermost to prevent rain entry (Figs. 24 & 25), and be at least 2 metres above ground level. It must be secured as shown in Fig. 18a. The plume outlet must also be at least 500mm from the air inlet in any direction (Fig. 25).

NOTE: The outlet must be positioned so that any condensate plume is directed away from adjacent surfaces. There must be a constant fall along the entire length of the flue system from the outlet back to the boiler.

4. It is possible to reduce or increase (with the addition of extensions) the length of either or both the 60/100 concentric and 60Ø exhaust.

5. Standard concentric flue extension kits may be added between the boiler elbow and the terminal assembly.

6. The minimum length of the concentric flue is 100mm when measured from the edge of the flue elbow.

IMPORTANT: The maximum equivalent length of concentric flue is:- **8 metres**
Additional bends may be fitted in the concentric flue, but the equivalent length must be reduced by 1 metre (93° elbow) or 0.5 metres (45° elbow).

7. 60Ø 1 metre extensions (including support bracket), and additional 93° & 45° elbows are available. Any additional 93° & 45° elbows must be accounted for when calculating flue lengths.

NOTE: Permitted positions of the plume outlet relative to doors, windows etc. are the same as for conventional concentric flues as detailed in the main Installation & Servicing Instructions and BS5440 Pt. 1. It is **NOT** necessary to fit a terminal guard over the air inlet or the plume outlet.

© Baxi Heating UK Ltd 2012

9.0 Plume Displacement

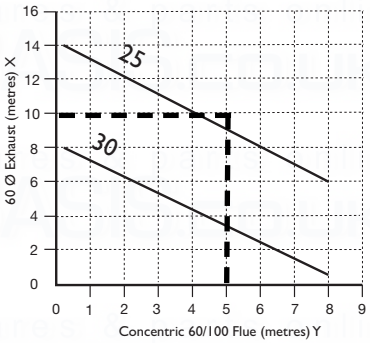

Example 1
Flue Lengths - Not Permissible

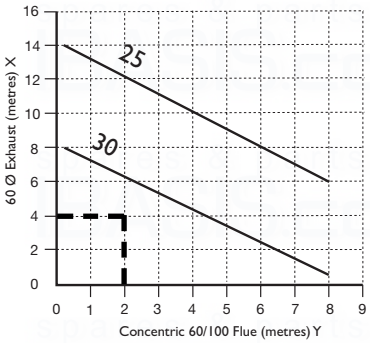

Example 2
Flue Lengths - OK

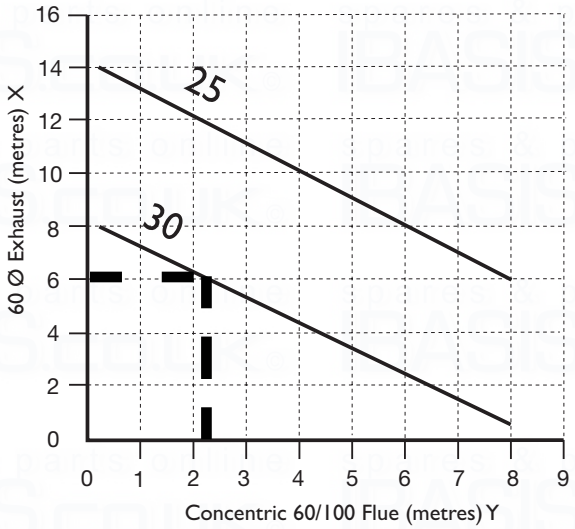

Example 3
Flue Lengths - OK

9.2 Determining Permissible Lengths

In the graph the solid line diagonal represents the relationship between the concentric flue assembly (and any extensions) and the 60Ø exhaust (and any extensions or additional bends).

Example 1 - Not Permissible
If, for instance, a concentric length of 5 metres was required and the 60Ø exhaust needed to be 10 metres the graph shows that this combination would NOT be permissible as the intersection point would be above the solid diagonal line.

Example 2 - Flue Lengths OK
Where both lengths have been determined they can be applied to the graph to check that the installation is permissible. For example, if it was known that 2 metres of concentric flue and 4 metres of 60Ø exhaust were required, the values could be applied to the graph as shown in Example 2. As the point of intersection of the dotted lines is below the solid diagonal line, the combination of lengths is shown to be acceptable.

Example 3 - Flue Lengths OK
In the example shown, assume that the concentric part of the flue needs to be 2.3 metres long. Find the position of '2.3' on the horizontal axis of the graph and then project upwards to the solid diagonal line. This is represented by the vertical thick dotted line. Where this dotted line intersects with the solid diagonal line on the graph, project across to the vertical axis. As can be seen this corresponds with 6 metres. Therefore, the total equivalent length of the 60Ø exhaust can be up to 6 metres. Any elbow equivalencies must be accounted for i.e. 93° elbows are equal to 1 metre, each 45° elbow to 0.5 metres.

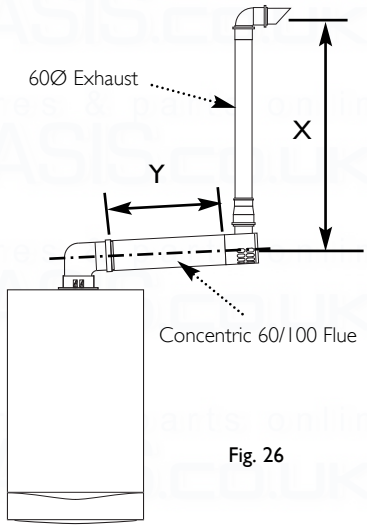

Fig. 26

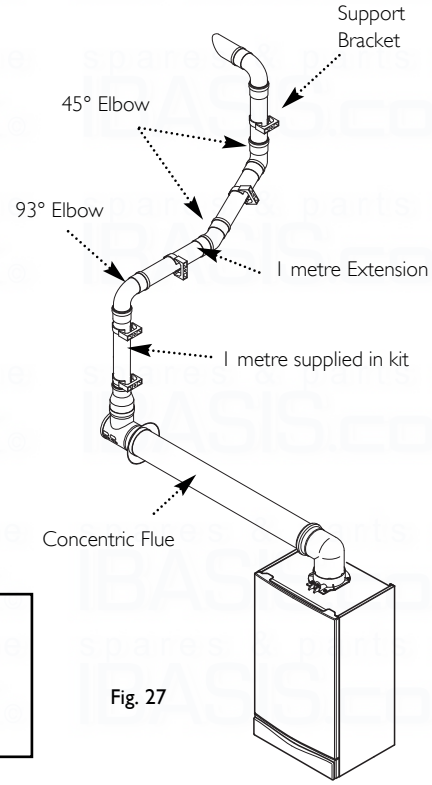

Fig. 27

Flue Length - Worked Example - 30 model

In Fig. 27 opposite an additional 93° elbow and pair of 45° elbows have been included in the 60Ø exhaust.
Also 3 straight extension pieces have been used.

To calculate total length:-

Length of 60Ø supplied in kit =	1 metre
3 x 1 metre Extensions =	3 metres
1 x 93° Elbow =	1 metre
2 x 45° Elbow =	1 metre (0.5 metres each)
Total 60Ø =	6 metres

After consulting the table in Example 3 it can be determined that the concentric flue could be up to approximately 2.3 metres long.

Additional Accessories

93° Elbow	5121639
45° Elbow (Pair)	5121370
1 metre 60Ø Extension	5121638

 © Baxi Heating UK Ltd 2012

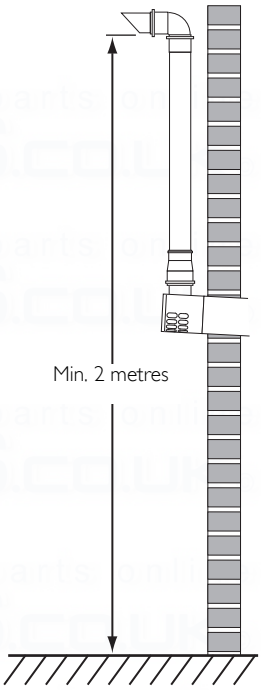

Fig. 28

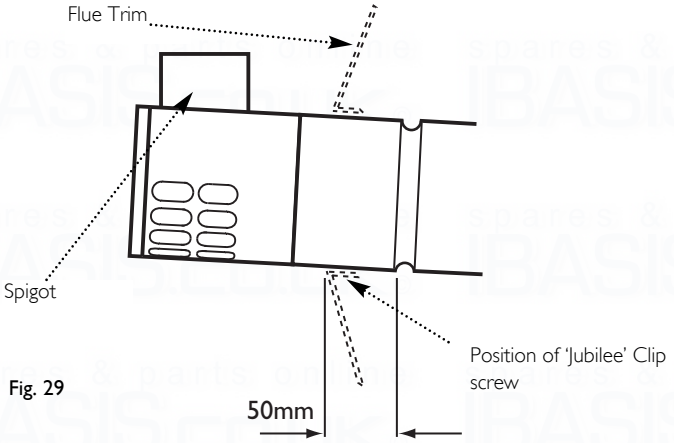

Fig. 29

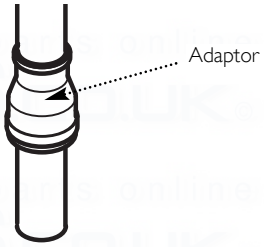

Fig. 31

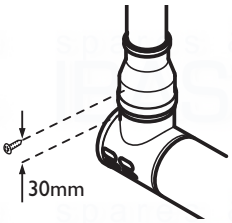

Fig. 30

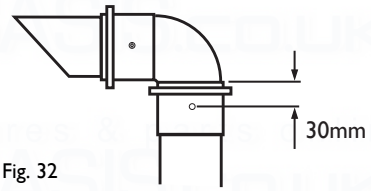

Fig. 32

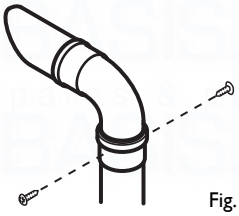

Fig. 33

9.3 General Fitting Notes

1. Cut a hole in the external wall which the concentric flue assembly will pass through. The hole should allow the flue to fall back to the boiler at an angle of at least 1.5°.

2. When completed the terminal must be at least 2 metres above ground level (Fig. 28).

3. Measure and cut to size the concentric assembly and any extensions that are being used.

4. Insert the concentric assembly through the hole from outside the building.

5. If required, the flexible flue trim should be fitted prior to this as it cannot be fitted after. Use the large 'Jubilee' clip to secure the trim to the flue (See Fig. 29, trim shown dotted), with the screw part of the clip at the bottom.

6. Connect any extensions or elbows that are being used to the concentric assembly. Engage the extension, elbow or concentric assembly in the boiler flue elbow. Fit the boiler flue elbow to the boiler adaptor.

7. Ensure that the concentric assembly and any extensions fall back to the boiler at an angle of at least 1.5° and that the external air inlet is to the bottom.

8. Use suitable brackets to support the concentric assembly and any extensions, and make good inside and outside.

9. The 60Ø exhaust can now be fitted. Slide the adaptor over the plain end of the 60Ø exhaust (Fig. 31) and engage the exhaust in the terminal. Slide the adaptor down over the spigot. Mark and drill the adaptor, using a 2mm bit, as shown in Fig. 30. Secure the adaptor to the spigot using one of the screws supplied.

10. If it is necessary to shorten the 60Ø exhaust or any of the extensions, the excess material must be cut from the plain end of the pipe.

11. Determine the position of the 60Ø exhaust and mark on the wall a suitable position for the support bracket. If extensions are being used, a support bracket is supplied in each kit.

12. Drill the wall, and fit the bracket(s) using the plug and screw provided.

13. Mark and drill the 60Ø exhaust, using a 2mm bit, as shown in Fig. 32. Complete the installation of the 60Ø exhaust, securing in the brackets.

14. Fit the 93° elbow/plume outlet and secure with the two remaining screws supplied. Ensure the plume outlet is at least 45° to the wall and that the 'peak' is uppermost (Fig. 33).

© Baxi Heating UK Ltd 2012

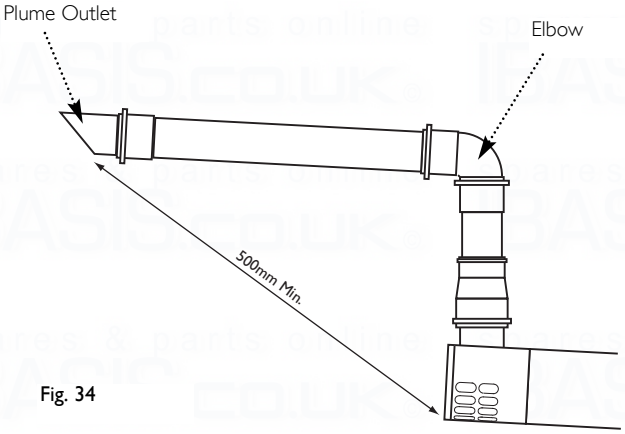

Fig. 34

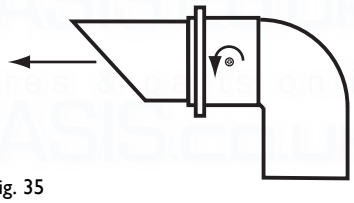

Fig. 35

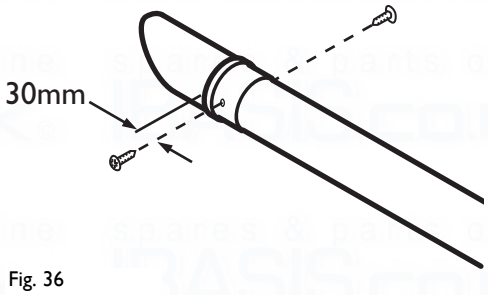

Fig. 36

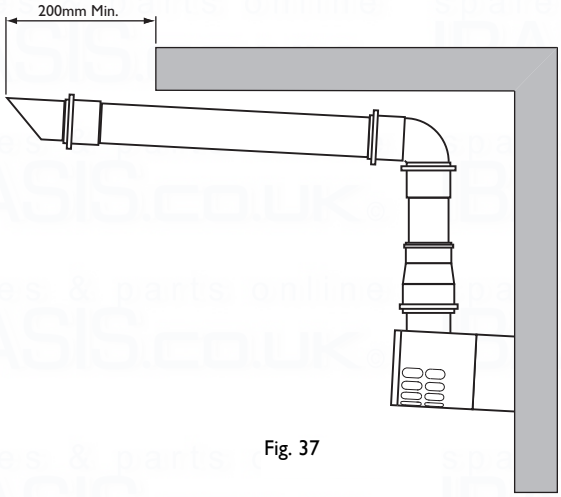

Fig. 37

9.3 General Fitting Notes (cont.)

15. For aesthetic purposes it is permissible to route the 60Ø exhaust in an enclosed box, but the air inlet and plume outlet MUST remain in free air.

16. It is also possible to separate the plume outlet from the 93° elbow to allow the flue to be installed as shown in Fig. 34.

17. To do this, first slacken the two screws retaining the plume outlet to the elbow, and remove the outlet (Fig. 35). The elbow can now be used to connect the vertical to horizontal 60Ø exhaust (Fig. 34). Retighten the screws in the elbow.

18. The outlet can now be fitted into the female end of an 60Ø extension piece. It must be secured using two of the screws supplied in the bag with the 'Jubilee' clip.

19. Mark the female end of the extension at 30mm as shown in two positions, directly opposite each other (Fig. 36).

20. Using a suitable bit (e.g. 2mm), drill through the extension and outlet. Secure using two of the screws supplied.

21. The remaining screw must be used to secure the adaptor to the concentric terminal.

22. When the plume outlet is positioned under a balcony or other projection (Fig. 37) it must protrude at least 200mm (it is not necessary to extend it further than this).

23. When under balconies or projections it is permissible to rotate the concentric flue length up to 70°, clockwise or anti-clockwise (Fig. 38), if there is insufficient space to connect vertically.

24.This will allow the connection of the exhaust to the outlet spigot.

25. All other minimum & maximum dimensions must be adhered to, and the air inlet positioned such that it will not be subject to rain entry.

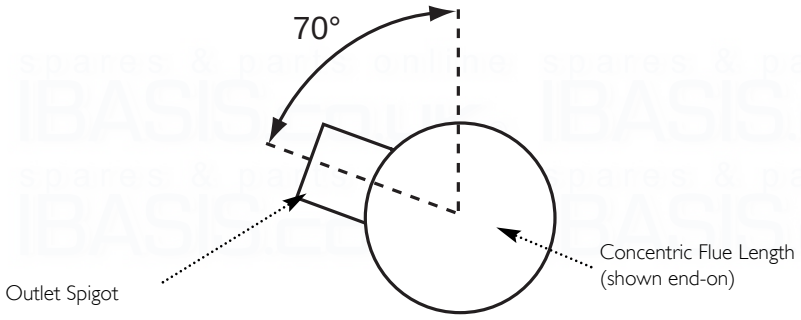

Fig. 38

 © Baxi Heating UK Ltd 2012

10.0 Installation

10.1 Unpacking & Initial Preparation

The gas supply, gas type and pressure must be checked for suitability before connection (see Section 7.4).

1. Remove staples, open flaps and remove cardboard sheet. Remove the polystyrene side pieces and literature. Two people can then lift out the boiler (Fig. 39).

2. After considering the site requirements (see Section 7.0) position the fixing template on the wall ensuring it is level both horizontally and vertically.

3. Mark the position of the two most suitable fixing slots for the wall plate and boiler lower fixing holes. It is preferable to use the vertical fixing slots.

4. Mark the position of the centre of the flue hole (rear exit). For side flue exit, mark as shown (Fig. 40).

5. If required, mark the position of the gas and water pipes. Remove the template.

6. Cut the hole for the flue (minimum diameter 116mm).

7. Drill the wall as previously marked to accept the wall plugs supplied. Secure the wall plate using the fixing screws.

8. Using a spirit level ensure that the plate is level before finally tightening the screws.

9. Connect the gas and water pipes to the valves on the wall plate using the copper tails supplied. Ensure that the sealing washers are fitted between the connections.

10.2 Flushing

1. Connect a tube to the central heating flow or return pipe (Fig. 41).

2. Flush thoroughly (see System Details, Section 6.1).

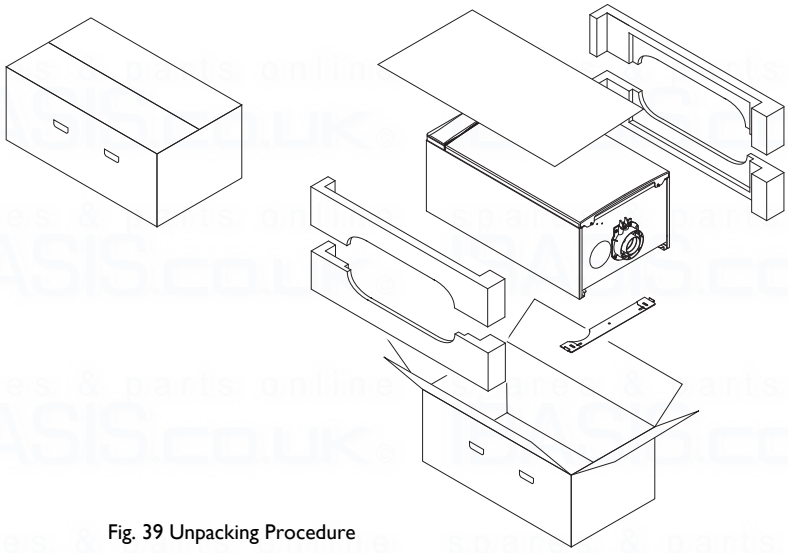

Fig. 39 Unpacking Procedure

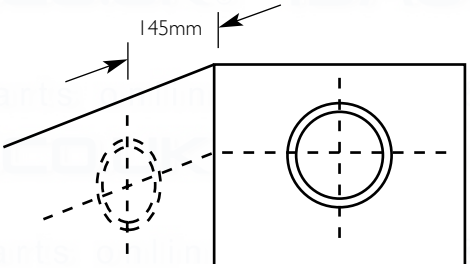

For Side Flue Exit

Fig. 40

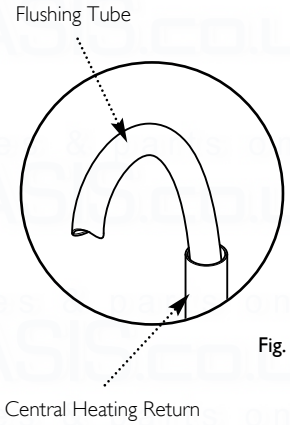

Fig. 41

© Baxi Heating UK Ltd 2012

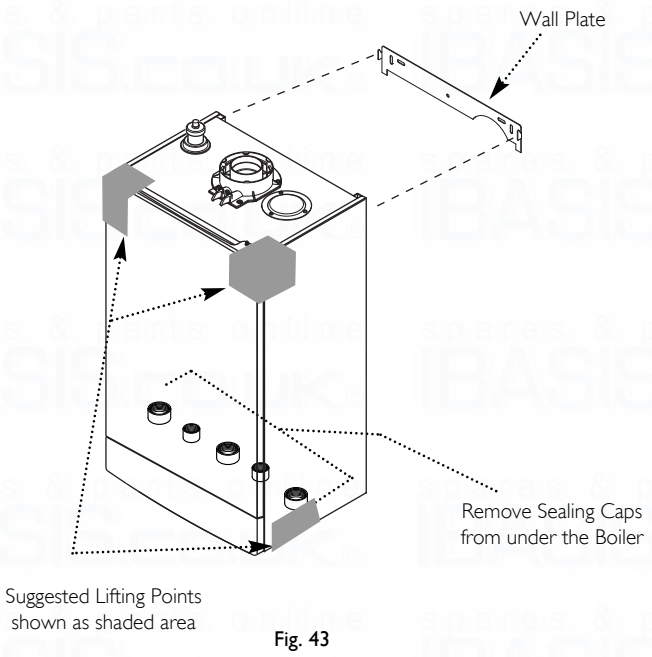

Fig. 43

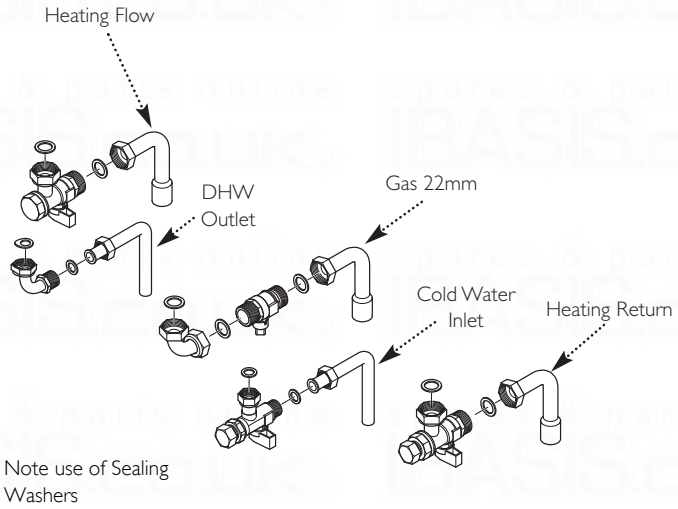

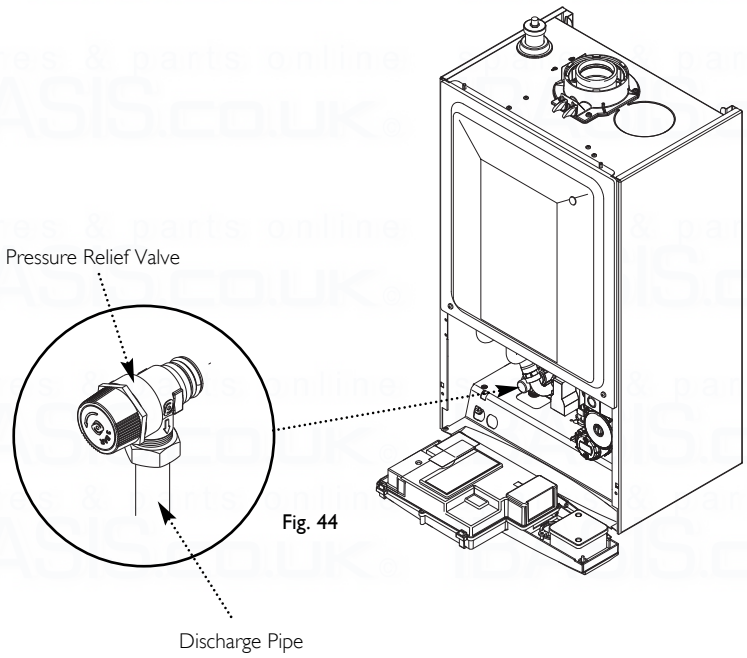

Fig. 44

10.3 Fitting The Boiler

1. Lift the boiler using the Lifting Points as shown by the shaded areas (Fig. 43) The boiler should be lifted by TWO PEOPLE. Engage the slots at the top rear of the boiler on the wall plate (Fig. 43) (see **Safe Manual Handling** page 5).

2. Remove the sealing caps from the boiler connections (Fig 43).

> **NOTE:** A small amount of water may drain from the boiler once the caps are removed.

3. **Insert the sealing washers between the valves and pipes on the wall plate and the boiler connections.**

4. Tighten all the connections.

10.4 Fitting the Safety Pressure Relief Discharge Pipe (Fig. 44)

1. Remove the discharge pipe from the kit.

2. Determine the routing of the discharge pipe in the vicinity of the boiler. Make up as much of the pipework as is practical, including the discharge pipe supplied.

3. The pipework must be at least 15mm diameter and run continuously downwards to a discharge point outside the building. See section 6.7 for further details.

4. Utilising one of the sealing washers, connect the discharge pipe to the adaptor and tighten the nut.

5. Complete the discharge pipework and route it to the outside discharge point.

> **IMPORTANT:** Make all soldered joints before connecting to the pressure relief valve.

10.5 Condensate Drain (see section 7.7)

1. Connect the condensate drain to the trap outlet pipe.

> **Ensure the discharge of condensate complies with any national or local regulations in force (see British Gas "Guidance Notes for the Installation of Domestic Gas Condensing Boilers").**

2. The connection will accept 21.5mm (3/4in) plastic overflow pipe which should generally discharge internally into the household drainage system. If this is not possible, discharge into an outside drain is acceptable.

 © Baxi Heating UK Ltd 2012

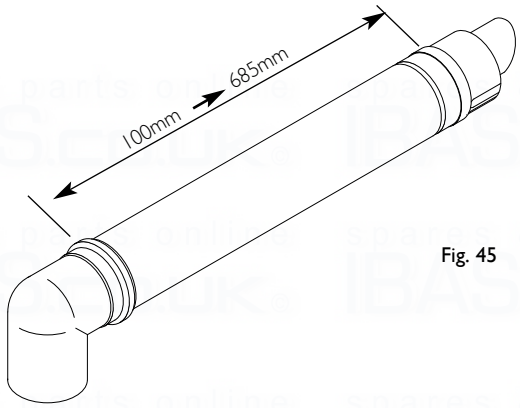

Fig. 45

10.6 Fitting The Flue

HORIZONTAL FLUE

1. The standard flue is suitable for lengths between 100mm minimum and 685mm maximum, as measured from the edge of the flue elbow outlet to the joint between the terminal and air duct (Fig. 45).

2. Locate the flue elbow on the adaptor at the top of the boiler. Set the elbow to the required orientation (Fig. 47).

NOTE: The flue elbow is angled at 93 degrees to ensure a fall back to the boiler.

3. Measure the distance from the outside wall face to the elbow. This dimension will be known as 'X' (Fig. 48).

4. To dimension 'X' add 50mm. This dimension to be known as 'Y'.

IMPORTANT: Check all dimensions before cutting.

5. Mark dimension 'Y' on the flue as shown (Fig. 49). Carefully cut the waste material from the flue, ensuring that the ducts are square and free from burrs.

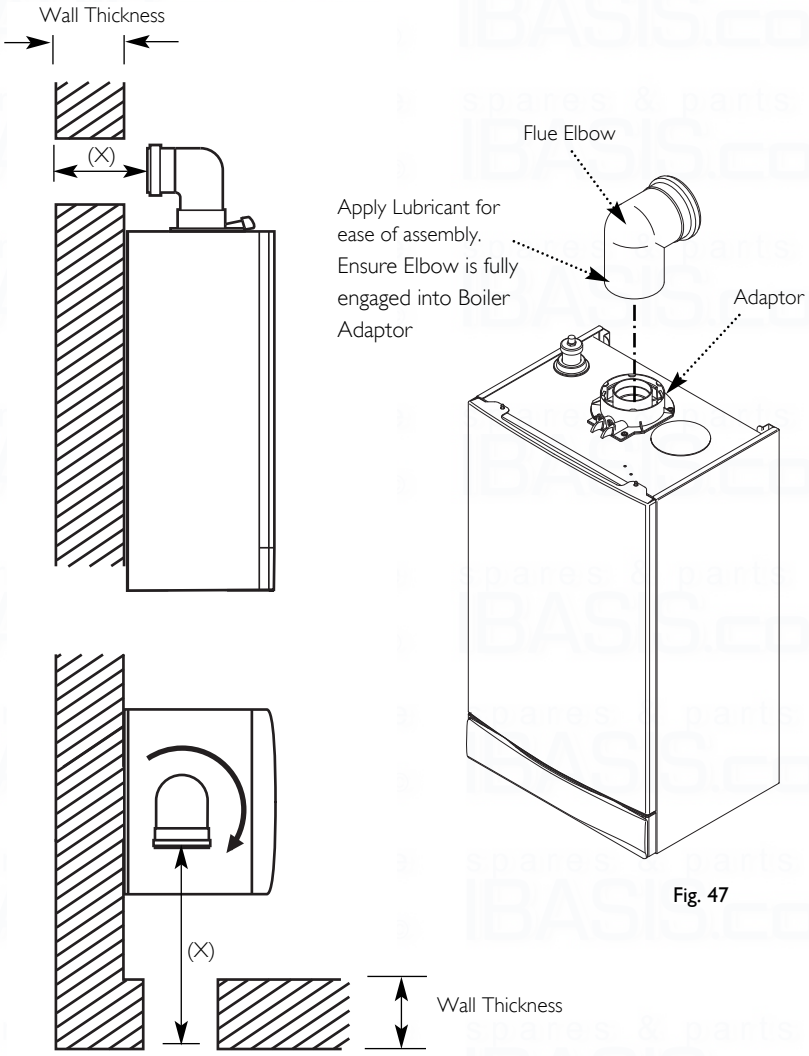

Fig. 47

Fig. 48

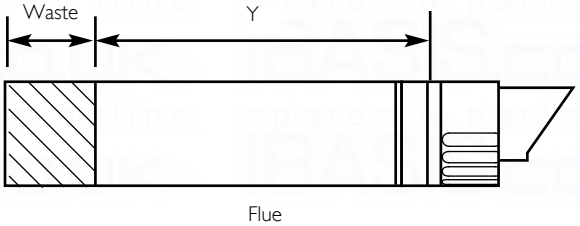

Fig. 49

© Baxi Heating UK Ltd 2012

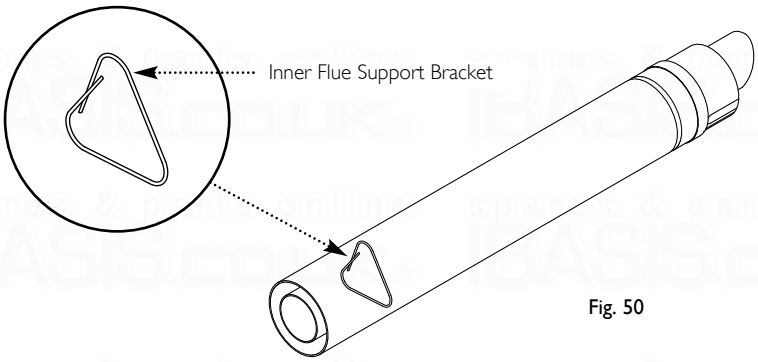

Fig. 50

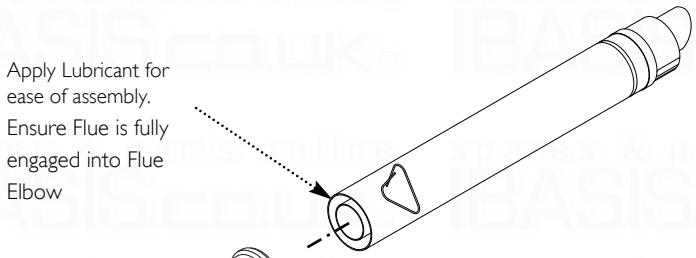

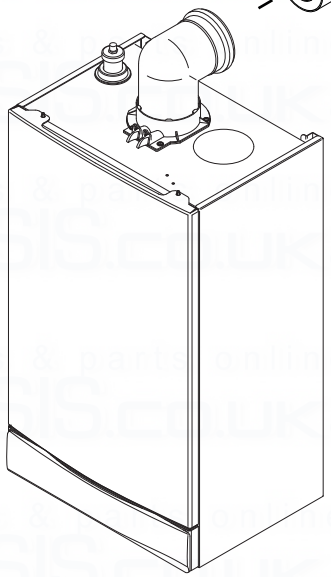

Fig. 51

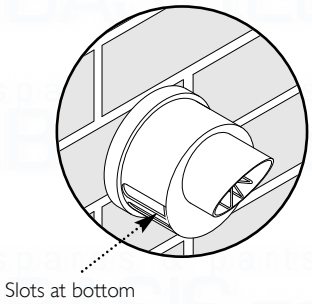

Fig. 52

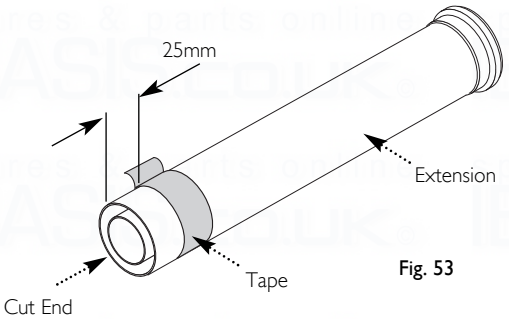

Fig. 53

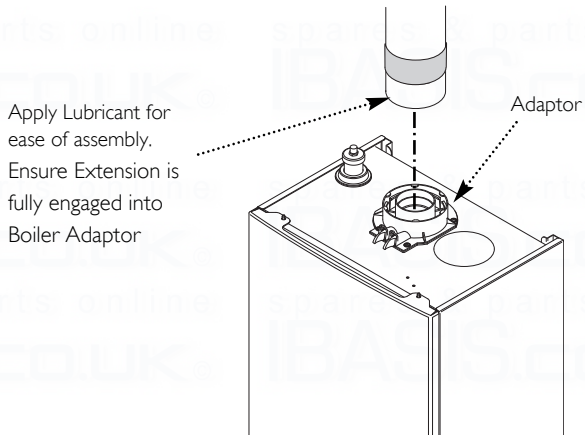

Fig. 54

10.6 Fitting the Flue (Cont)

6. The inner flue duct support bracket may be in the waste portion of the flue. In this case retrieve the bracket before discarding the waste.

7. Take the inner flue support bracket (if not already fitted) and engage it over the flue duct. This will centralise the flue and air ducts, and ease assembly (Fig. 51).

8. Insert the flue through the hole in the wall. Fit the elbow to the boiler adaptor, ensuring that it is pushed fully in.

9. Draw the flue back through the wall and engage it in the elbow. It may be necessary to use soap solution or similar to ease assembly of the elbow adaptor and flue (Fig. 51).

10. Ensure that the terminal is positioned with the slots to the bottom (Fig. 52).

IMPORTANT: It is essential that the flue terminal is fitted as shown to ensure correct boiler operation and prevent water entering the flue.

11. Make good between the wall and air duct outside the building.

12. Fit the flue trim if required, and if necessary fit a terminal guard (see Section 8.8 & 8.9).

CONCENTRIC VERTICAL FLUE

15. Once the length of the vertical concentric extension has been determined mark and carefully cut off the excess material. The cut end MUST be square and free of burrs to ensure correct insertion into the boiler adaptor.

16. Measure 25mm from the end of the flue extension and apply a length of tape around the outer duct (Fig. 53).

17. Engage the extension into the adaptor up to this position (Fig. 54). Once the installation of the flue is complete and all support brackets are securely in place remove the tape.

 © Baxi Heating UK Ltd 2012

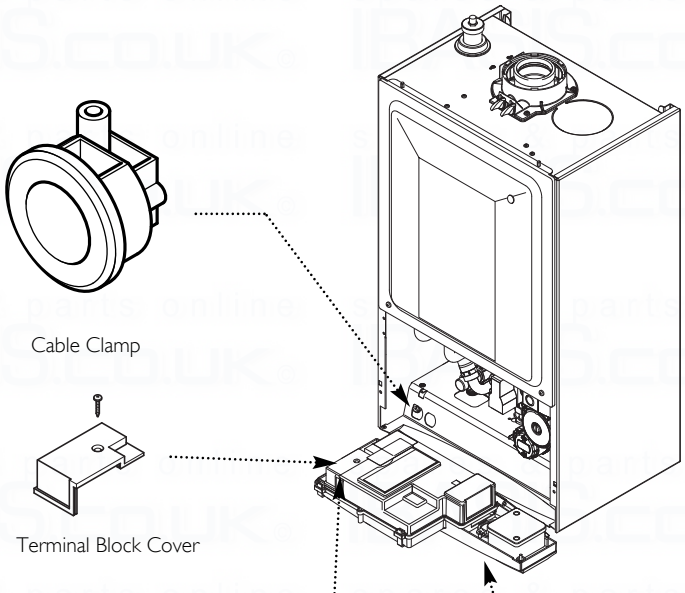

Fig. 56

Fig. 55

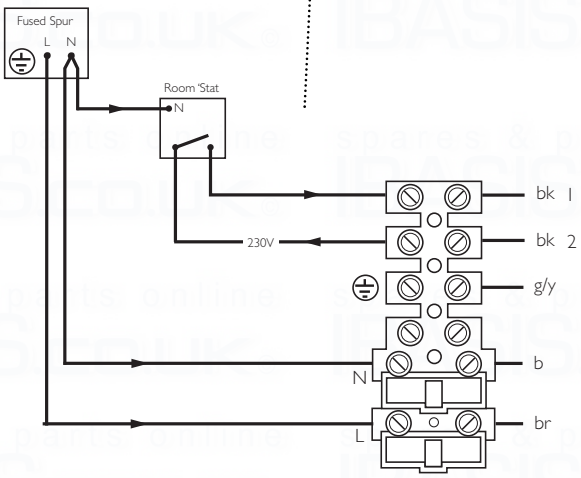

Fig. 57

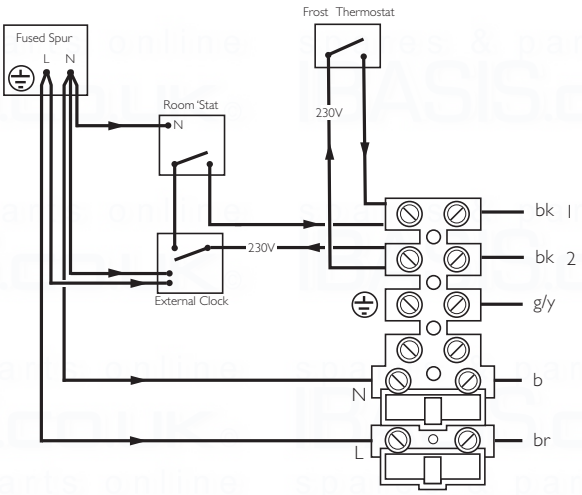

NOTE: The 230V switched signal for external controls (Frost Stat - Room Stat - Timer) must always be taken from terminal 2 at the boiler. Live, Neutral and Earth to power these controls must be taken from the Fused Spur.

10.7 Making The Electrical Connections

NOTE: Both the Live and Neutral connections are fused.

To connect an external control proceed as follows:-

1. Slacken the facia panel securing screws and lift the outercase panel so that its securing tabs are clear of the facia. Remove the panel.

2. Completely undo the screws securing the facia panel and hinge it down (Fig. 55).

3. Undo the terminal block cover securing screw and remove the cover (Fig. 55).

4. Slacken the unused cable clamp on the LH side of the boiler chassis (Fig. 56). Insert the external control wiring through the clamp and route it to the terminal block.

5. Refer to the instructions supplied with the control.

IMPORTANT: The room thermostat **MUST** be suitable for 230V switching.

NOTE: An external frost thermostat cannot be used with the optional integral timer.

6. Remove the link between terminals 1 & 2. The 230V supply at terminal 2 must be connected to the thermostat. The switched output from the thermostat must be connected to terminal 2. (Fig. 57). If the room thermostat being used incorporates an anticipator it MUST be wired as shown in Fig. 57.

7. Ensure that the external control input cable(s) have sufficient slack to allow the control box to drop down. Tighten the cable clamp on the boiler chassis.

8. Replace the terminal block cover, routing the external control input cable(s) through the second cut-out.

10.8 Preliminary Electrical Checks

1. Prior to commissioning the boiler preliminary electrical system checks should be carried out.

2. These should be performed using a suitable meter, and include checks for Earth Continuity, Resistance to Earth, Short Circuit and Polarity.

© Baxi Heating UK Ltd 2012

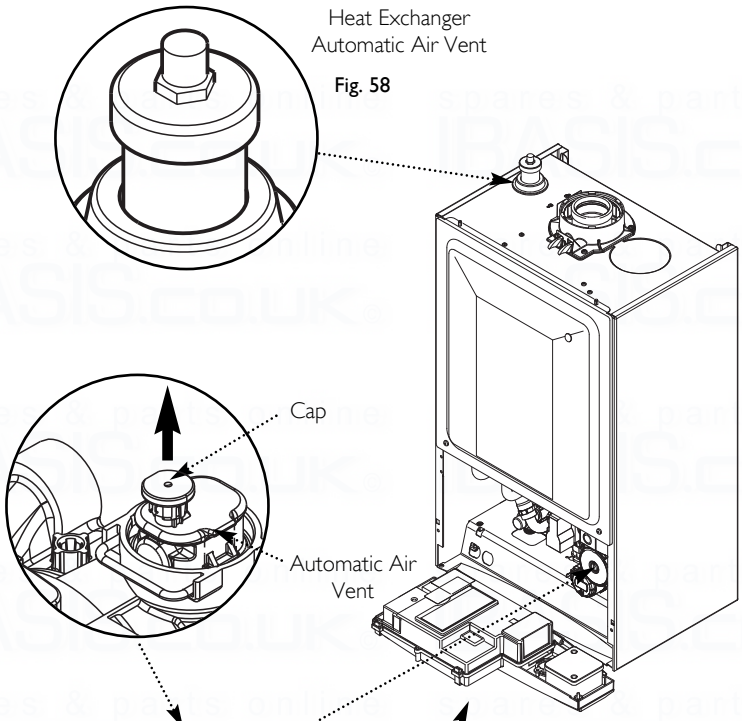

Fig. 58

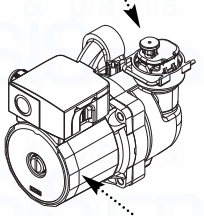

Fig. 59

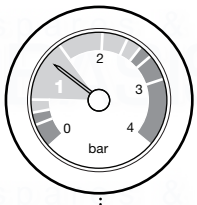

Fig. 60

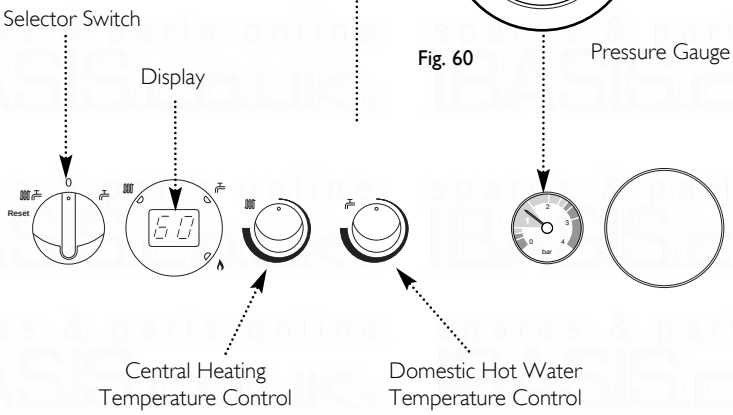

Fig. 61

11.0 Commissioning

11.1 Commissioning the Boiler

1. Reference should be made to BS:EN 12828 & 14336 when commissioning the boiler.

2. At the time of commissioning, complete all relevant sections of the Benchmark Checklist at the rear of this publications.

3. Open the mains water supply to the boiler.

IMPORTANT: The heat exchanger air vent on top of the boiler (Fig. 58) **MUST** be opened before filling the primary system.

4. Open all hot water taps to purge the DHW system.

5. Ensure that the filling loop is connected and open, then open the heating flow and return valves on the boiler.

6. Open the cap on the automatic air vent on the pump body by pulling upwards (Fig. 59).

7. The system must be flushed in accordance with BS 7593 (see Section 6.2) and the flushing agent manufacturers instructions.

8. Pressurise the system to 1.5 bar (Fig. 60) then close and disconnect the filling loop.

9. Turn the gas supply on and purge according to in GB BS 6891 and in IE I.S. 813 "Domestic Gas Installations".

10. Test for gas soundness.

11. Hinge the facia panel upwards and refit the case front panel. Tighten the securing screws.

IMPORTANT: The combustion for this appliance has been checked, adjusted and preset at the factory for operation on the gas type specified on the appliance data plate. No measurement of the combustion is necessary. Do not adjust the air/gas ratio valve.

12. Having checked:
- That the boiler has been installed in accordance with these instructions.
- The integrity of the flue system and the flue seals.
- The integrity of the boiler combustion circuit and the relevant seals.

Proceed to put the boiler into operation as follows:

 © Baxi Heating UK Ltd 2012

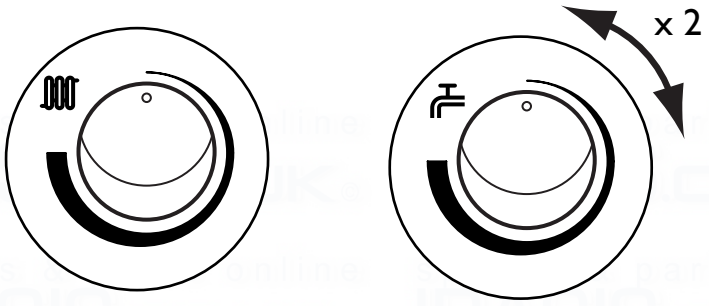

Fig. 62

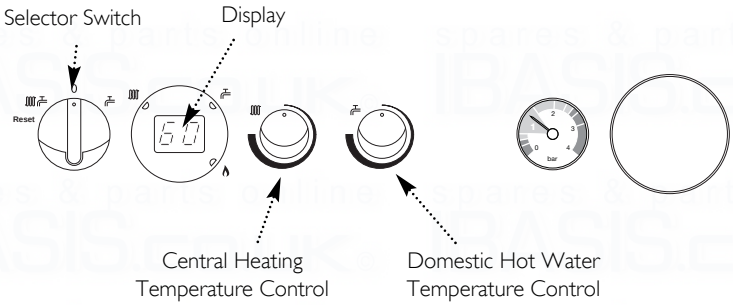

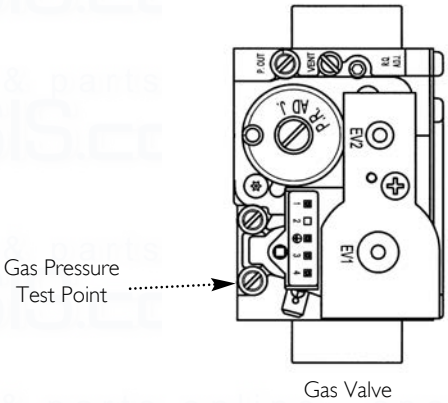

Fig. 62a

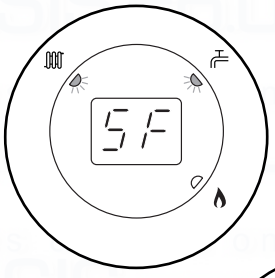

Fig. 63

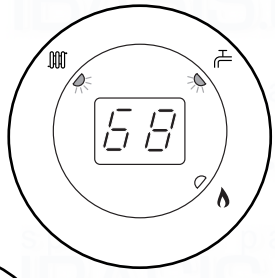

Fig. 64

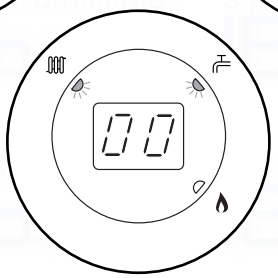

Fig. 65

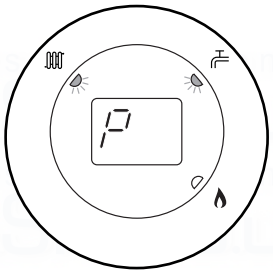

Fig. 66

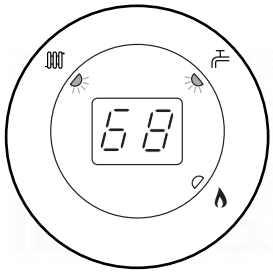

Fig. 67

11.0 Commissioning

11.2 Check the Operational (Working) Gas Inlet Pressure

1. Ensure that all controls are calling for heat, and the selector switch is in the central heating and hot water position ( ). The current boiler temperature is shown on the display.

2. It is necessary to set the boiler to 'Calibration Mode'.

3. Turn both temperature control knobs fully anticlockwise, then quickly turn the DHW temperature knob 1/4 clockwise twice and back fully anticlockwise (Fig. 62).

4. The display will now alternate between 'SF' and the current boiler temperature and both green LEDs will flash (Figs. 63 & 64).

5. Turn CH temperature control knob fully clockwise. As the knob is turned the display will change from '0' to '00' (Fig. 65) indicating maximum rate, then revert to 'P' alternating with the current boiler temperature (Figs 66 & 67).

6. With the boiler operating in the maximum rate condition check that the operational (working) gas pressure at the inlet gas pressure test point (Fig. 62a) is in accordance with B.S. 6798 & B.S. 6891.

7. Ensure that this inlet pressure can be obtained with all other gas appliances in the property working.

Measure the Gas Rate

8. With any other appliances & pilot lights turned OFF the gas rate can be measured. It should be:-

25 model - 2.76 m^3/h

30 model - 3.17 m^3/h

9. The 'Calibration Function' is active for 20 minutes unless the maximum CH temperature is exceeded.

10. The function can be disabled at any time by turning the DHW temperature knob.

11. Carefully read and complete all sections of the Benchmark Commissioning Checklist at the rear of this publication that are relevant to the boiler and installation. These details will be required in the event of any warranty work. The publication must be handed to the user for safe keeping and each subsequent regular service visit recorded.

12. For IE, it is necessary to complete a "Declaration of Conformity" to indicate compliance with I.S. 813. An example of this is given in I.S. 813 "Domestic Gas Installations". This is in addition to the Benchmark Commissioning Checklist.

© Baxi Heating UK Ltd 2012

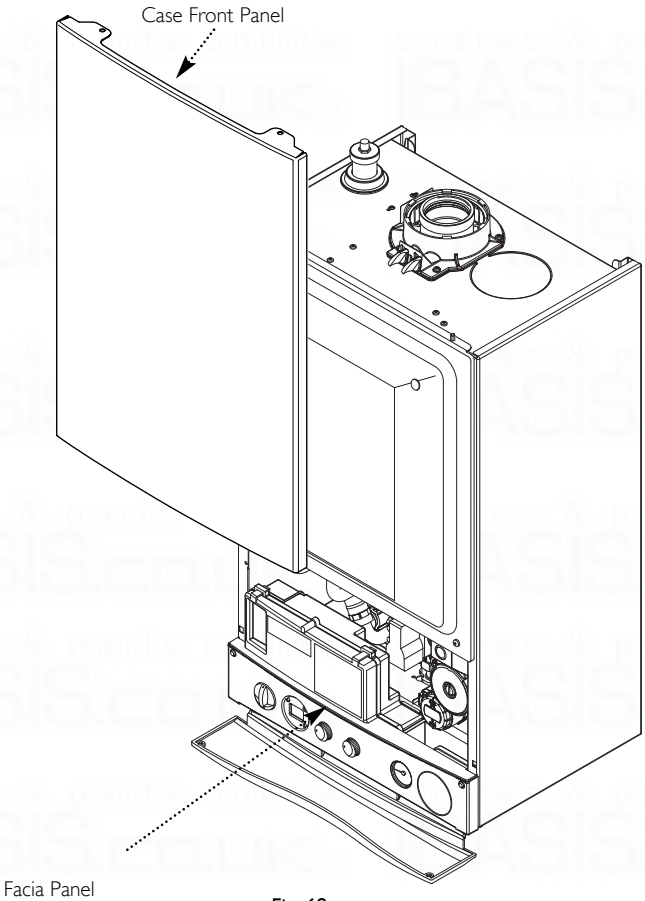

Fig. 68

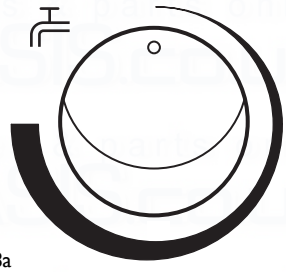

Fig. 68a

Pre-heat Off

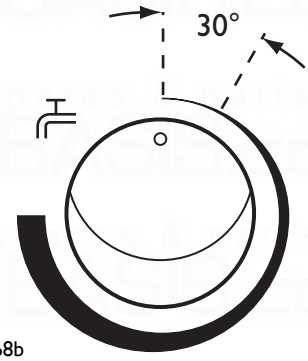

Fig. 68b

Pre-heat Activated

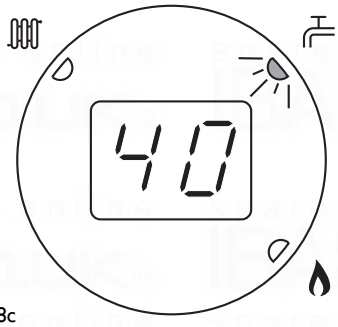

Fig. 68c

12.0 Completion

12.1 Completion

1. Instruct the user in the operation of the boiler and system, explaining the operational sequence.

2. Set the central heating and hot water temperature control knobs to the requirements of the user.

3. Carefully read and complete all sections of the Benchmark Commissioning Checklist at the rear of this publication that are relevant to the appliance and installation. These details will be required in the event of any warranty work. The publication must be handed to the user for safe keeping and each subsequent regular service visit recorded.

4. For IE, it is necessary to complete a "Declaration of Conformity" to indicate compliance with I.S. 813. An example of this is given in I.S. 813 "Domestic Gas Installations". This is in addition to the Benchmark Commissioning Checklist.

5. Hand over the Users Operating, Installation and Servicing Instructions giving advice on the necessity of regular servicing.

12.2 Operation of Pre-heat

1. The boiler incorporates an intelligent pre-heat feature that will ensure optimum domestic hot water performance. This features 'learns' the domestic hot water demand, and pre-heats the boiler primary circuit (main heat exchanger, pipework within the boiler case and domestic hot water heat exchanger) in anticipation of further demand at the same time on the next day.

2. The feature works on a 24 hour basis. E.G. if there is a demand for hot water at 7:00 AM on Monday, the pre-heat will operate at 6:50 AM on Tuesday for 1 hour. Similarly if there is a demand at 9:25 PM, the pre-heat will operate at 9:15 PM the next day, again for 1 hour.

3. If on Tuesday at 7:00 AM there is no hot water demand there will be no pre-heat on Wednesday at this time.

4. The feature also operates for one hour after each demand to maintain the temperature of the boiler.

5. There can be up to 24 pre-heat operations in a 24 hour period. While operating in the pre-heat mode the boiler will fire up briefly 3 or 4 times in the hour to maintain the boiler at temperature.

6. During the pre-heat period the domestic hot water indicator will flash (Fig. 68c).

7. The pre-heat feature will not operate if the DHW Control is turned fully anticlockwise (Fig. 68a). In this position the boiler will operate as a conventional combination boiler, providing hot water at 50° C.

8. Once the Temperature Control is turned approximately 30° clockwise (Fig. 68b) the pre-heat feature is activated.

9. Between 30° and fully clockwise the hot water temperature can be altered from 40° and 60° C.

 © Baxi Heating UK Ltd 2012

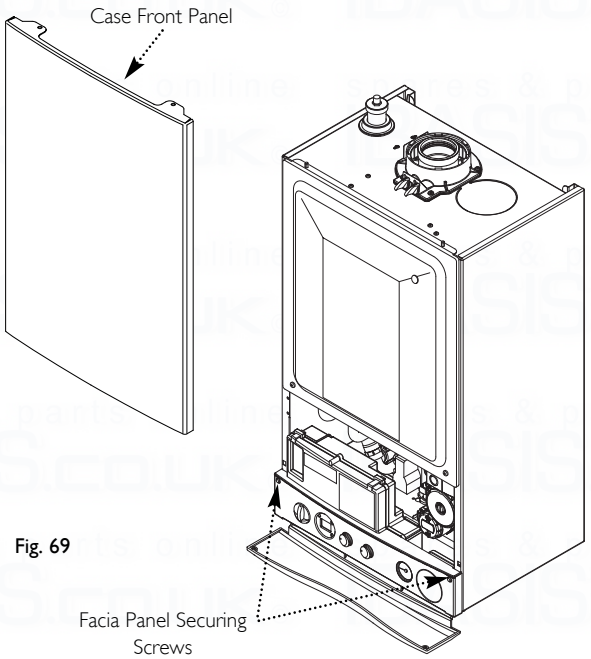

Fig. 69

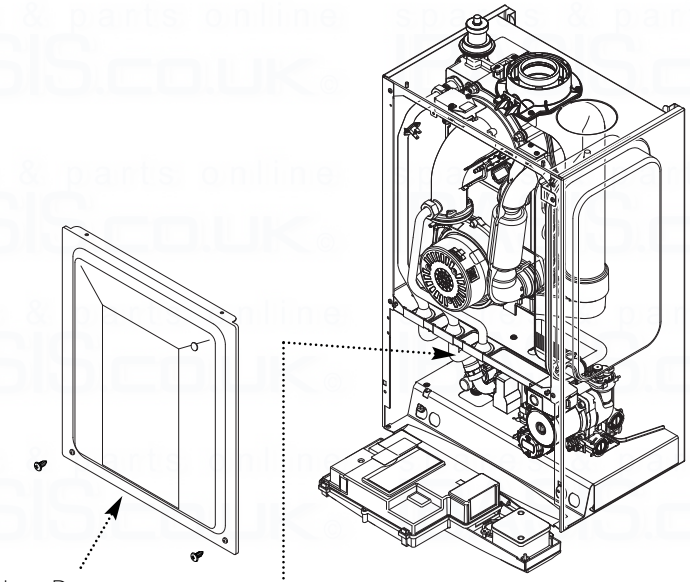

Fig. 70

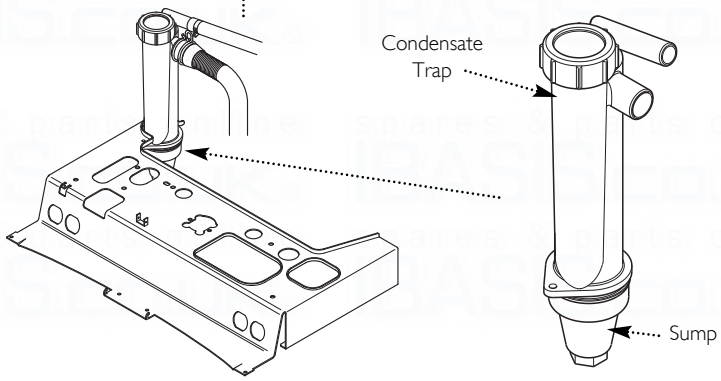

Fig. 71

13.1 Annual Servicing

1. For reasons of safety and economy, it is recommended that the boiler is serviced annually. Servicing must be performed by a competent person in accordance with B.S. 7967-4.

2. After servicing, complete the relevant Service Interval Record section of the Benchmark Commissioning Checklist at the rear of this publication.

IMPORTANT: During routine servicing, and after any maintenance or change of part of the combustion circuit, the following must be checked:-
- The integrity of the complete flue system and the flue seals.
- The integrity of the boiler combustion circuit and relevant seals as described in Section 13.2.
- The operational gas inlet pressure as described in Section 11.2.1 to 11.2.7 and the gas rate as described in 11.2.8.
- The combustion performance as described in **'Check the Combustion Performance'** (13.1.4 to 13.1.6 below).

3. **Competence to carry out Checking Combustion Performance**
B.S. 6798 'Specification for Installation & Maintenance of Gas Fired Boilers not exceeding 70kW' advises that:-

- The person carrying out a combustion measurement should have been assessed as competent in the use of a flue gas analyser and the interpretation of the results.
- The flue gas analyser used should be one meeting the requirements of BS7927 or BS-EN50379-3 and be calibrated in accordance with the analyser manufacturers' requirements.
- Competence can be demonstrated by satisfactory completion of the CPA1 ACS assessment, which covers the use of electronic portable combustion gas analysers in accordance with BS 7967, Parts 1 to 4.

Check the Combustion Performance (CO/CO_2 ratio)
4. Set the boiler to operate at maximum rate as described in Section 15.1.1 to 15.1.6.

5. Remove the plug from the flue sampling point, insert the analyser probe and obtain the CO/CO_2 ratio. **This must be less than 0.004**.

6. If the combustion reading (CO/CO_2 ratio) is greater than this, and the integrity of the complete flue system and combustion circuit seals has been verified, and the inlet gas pressure and gas rate are satisfactory either:
- Perform the 'Annual Servicing - Inspection' (Section 13.2) & re-check
- Adjust the gas valve (Section 15.0) & re-check
- Replace the gas valve (Section 14.24) & re-check

13.2 Annual Servicing - Inspection

1. Ensure that the boiler is cool.

2. **Ensure that both the gas and electrical supplies to the boiler are isolated.**

3. Slacken the screws securing the facia panel. Lift the outercase panel so that its securing tabs are clear of the facia. Remove the panel, allowing the facia to hinge down (Fig. 69).

4. Remove the screws securing the inner door panel. Lift the panel slightly to disengage it from the studs on top of the case (Fig. 70).

5. Unscrew the sump from the bottom of the condensate trap assembly (Fig. 71) and remove any deposits from the sump and trap. Clean as necessary and replace the sump.

© Baxi Heating UK Ltd 2012

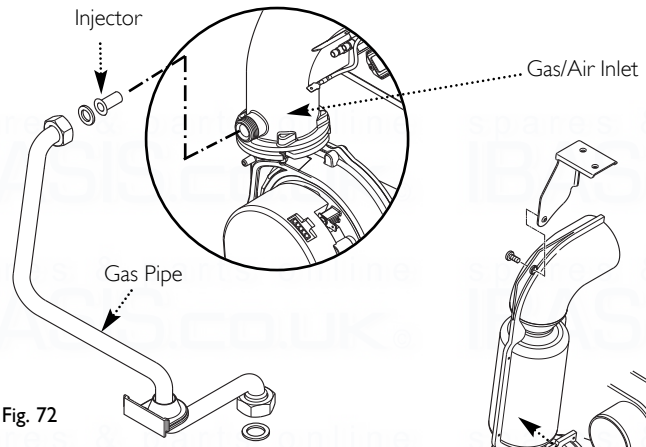

Fig. 72

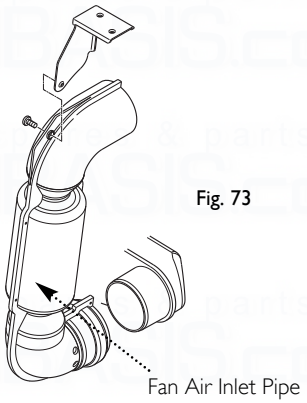

Fig. 73

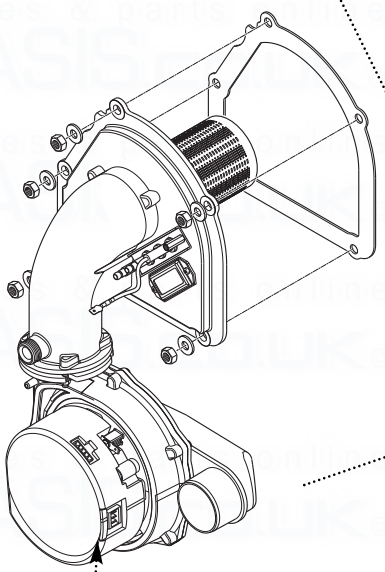

Fig. 74

Fan, Gas/Air Inlet & Burner Assembly

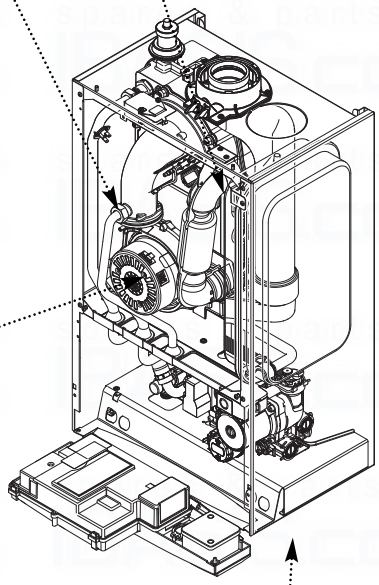

Fig. 75

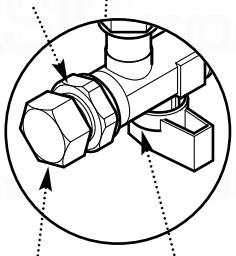

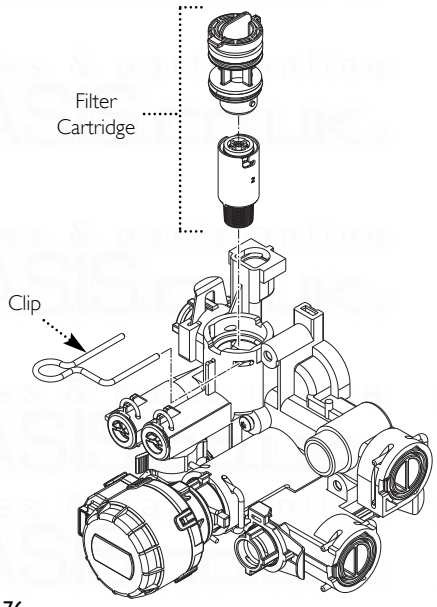

Fig. 76

Inlet/Return Manifold

13.2 Annual Servicing - Inspection (Cont)

6. Undo the nut on the gas pipe at the gas/air inlet (Fig. 72) and the gas valve. Remove the pipe, taking care not to lose the sealing washers. Also remove the injector.

7. Disconnect the electrode lead caps, remove the strain relief clip from the sensing lead and disconnect the lead. Remove the fan electrical plugs and pull the sensing pipe off the fan.

8. Undo the screw securing the fan air inlet pipe to the bracket on the boiler top panel. Remove the pipe (Fig. 73).

9. Undo the five retaining nuts and washers and remove the fan, gas/air inlet and burner assembly (Figs. 74).

10. Carefully clean any debris from the heat exchanger.

11. Inspect the burner, electrode position, insulation, and gasket, cleaning or replacing if necessary. Clean any dirt or dust from the air box.

12. Reassemble in reverse order.

DHW Filter (Fig.76)

13. If the flow of domestic hot water is diminished, it may be necessary to clean the filter.

14. Turn the DHW isolation cock (Fig. 75) off and draw off from a hot tap.

15. Remove the retaining clip and extract the filter cartridge and rinse thoroughly in clean water. Reassemble and check the flow.

16. Turn the selector switch fully anticlockwise against the spring pressure to the reset position and hold for 5 seconds to reset the boiler.

17. Complete the relevant Service Interval Record section of the Benchmark Commissioning Checklist at the rear of this publication and then hand it back to the user.

 © Baxi Heating UK Ltd 2012

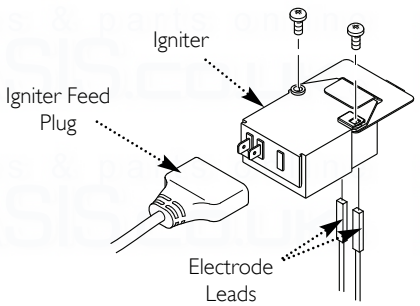

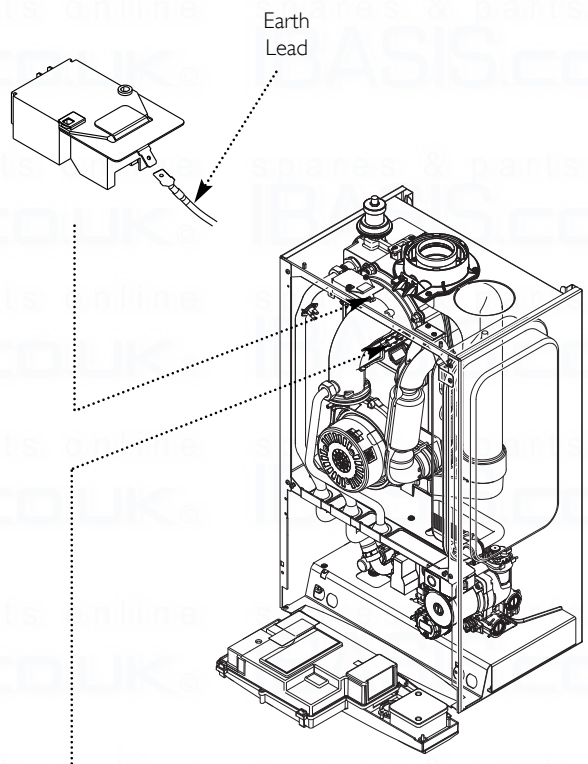

Fig. 77

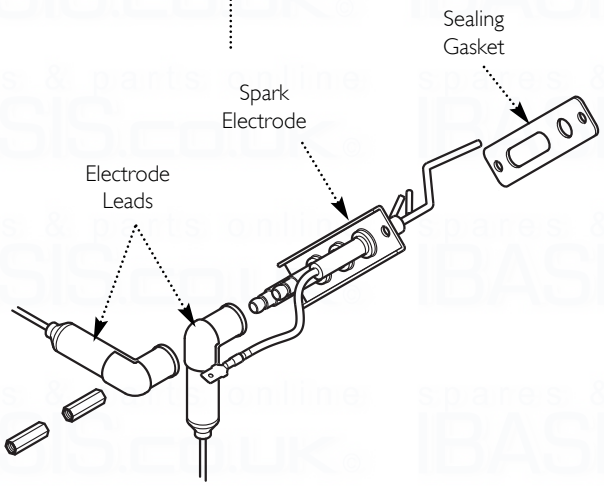

Fig. 78

IMPORTANT: When changing components ensure that both the gas and electrical supplies to the boiler are isolated before any work is started. When the component has been changed turn the selector switch fully anticlockwise against the spring pressure to the reset position and hold for 5 seconds to reset the boiler before recommissioning.

See Section 13.2 "Annual Servicing" for removal of case panel, door etc.

14.1 Igniter (Fig. 77)

1. Disconnect the igniter feed plug, earth wire and the electrode leads, noting their positions.

2. Undo the screws securing the igniter to the boiler top panel. Remove the igniter.

3. Fit the new igniter and reassemble in reverse order.

14.2 Electrode Assembly (Fig. 78)

1. Disconnect the electrode lead caps, remove the strain relief clip from the sensing lead and disconnect the lead.

2. Undo the extended nuts securing the electrode assembly to the combustion box panel and remove the assembly.

3. Check the condition of the sealing gasket and replace if necessary. Reassemble in reverse order.

© Baxi Heating UK Ltd 2012

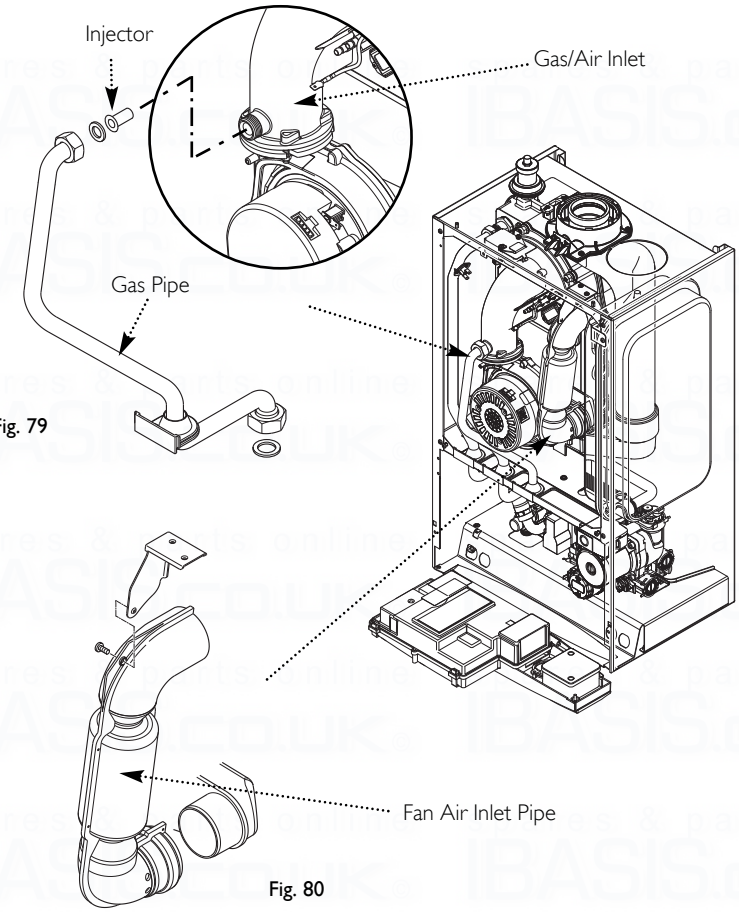

Fig. 79

Fig. 80

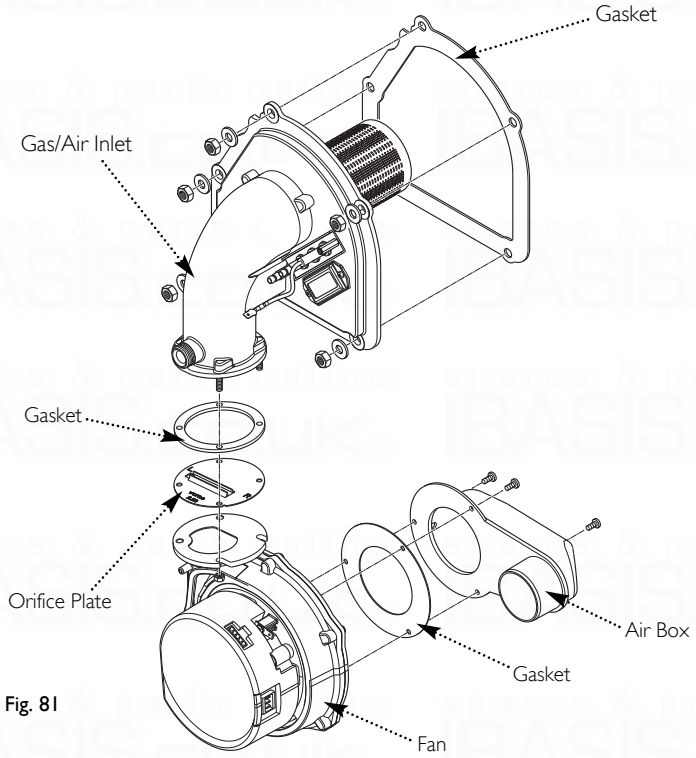

Fig. 81

14.3 Fan

1. Undo the nut on the gas pipe at the gas/air inlet (Fig. 79) and the gas valve. Remove the pipe, taking care not to lose the sealing washers. Also remove the injector.

2. Disconnect the electrode lead caps, remove the strain relief clip from the sensing lead and disconnect the lead. Remove the fan electrical plugs and pull the sensing pipe off the fan.

3. Undo the screw securing the fan air inlet pipe to the bracket on the boiler top panel. Remove the pipe (Fig. 80).

4. Undo the five retaining nuts and washers and remove the fan, gas/air inlet and burner assembly (Fig. 81).

5. Remove the air box and gasket from the fan and transfer to the new fan. Examine and replace the gasket if necessary.

6. Remove the four nuts and separate the fan from the gas/air inlet. Note the position of the orifice plate and examine the gasket, replacing if necessary (Fig. 81).

7. Fit the new fan, ensuring that the orifice plate is correctly fitted, and that the gasket is in position.

8. Examine the insulation around the burner and the heat exchanger gasket and replace if necessary.

9. Reassemble in reverse order, ensuring that the injector is in place and the sensing pipe is connected to the fan.

14.4 Injector (Fig. 79)

1. Undo the nut on the gas pipe at the gas/air inlet and the gas valve. Remove the pipe.

2. Extract and replace the injector and reassemble in reverse order. Check the condition of the sealing washers, replacing if necessary.

 © Baxi Heating UK Ltd 2012

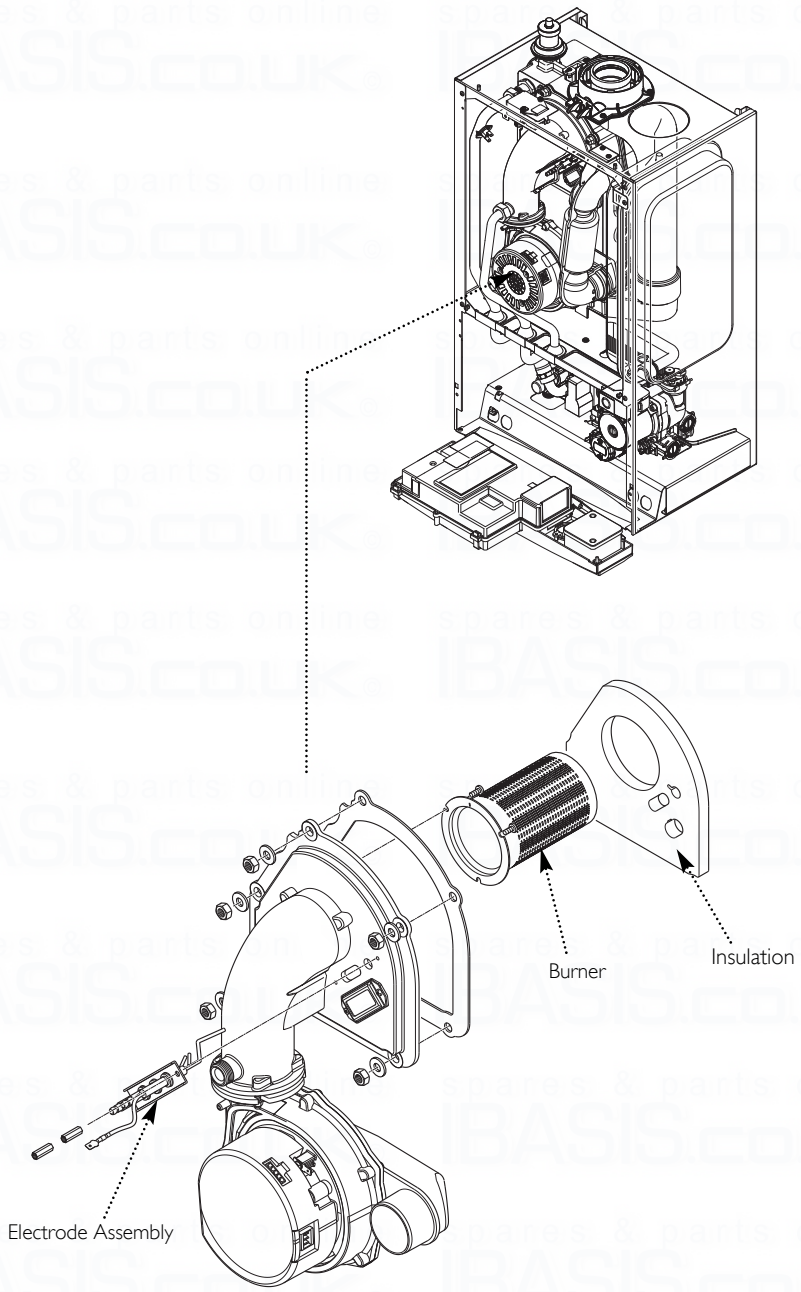

Fig. 82

14.5 Burner (Fig. 82)

1. Undo the nut on the gas pipe at the gas/air inlet and the gas valve. Remove the pipe, taking care not to lose the sealing washers. Also remove the injector.

2. Disconnect the electrode lead caps, remove the strain relief clip from the sensing lead and disconnect the lead. Remove the fan electrical plugs and pull the sensing pipe off the fan.

3. Undo the screw securing the fan air inlet pipe to the bracket on the boiler top panel. Remove the pipe.

4. Undo the five retaining nuts and washers and remove the fan, gas/air inlet and burner assembly.

5. Remove the electrode assembly and draw the insulation piece away. Undo the burner securing screws.

6. Fit the new burner and gasket, examine the insulation and heat exchanger gasket, replacing if necessary.

7. Reassemble in reverse order.

14.6 Insulation (Fig. 82)

1. Undo the nut on the gas pipe at the gas/air inlet and the gas valve. Remove the pipe, taking care not to lose the sealing washers. Also remove the injector.

2. Disconnect the electrode lead caps, remove the strain relief clip from the sensing lead and disconnect the lead. Remove the fan electrical plugs and pull the sensing pipe off the fan.

3. Undo the screw securing the fan air inlet pipe to the bracket on the boiler top panel. Remove the pipe.

4. Undo the five retaining nuts and washers and remove the fan, gas/air inlet and burner assembly.

5. Remove the electrode assembly and draw the insulation piece away. Replace the insulation and reassemble in reverse order. Examine the heat exchanger gasket and replace as necessary.

© Baxi Heating UK Ltd 2012

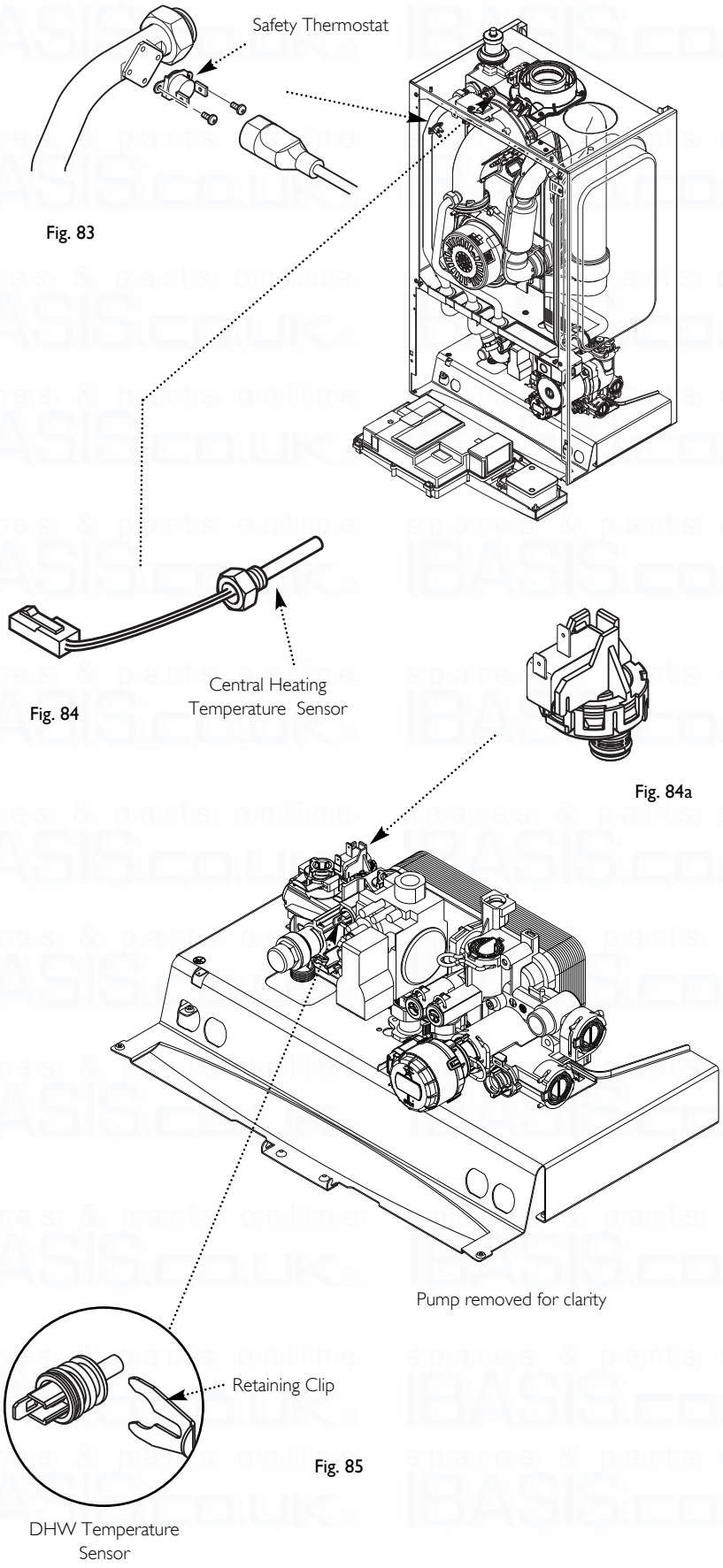

14.7 Safety Thermostat (Fig. 65)

1. Pull the plug off the thermostat.

2. Remove the screws securing the thermostat to the mounting plate on the flow pipe.

3. Reassemble in reverse order, ensuring that the plug is pushed fully on.

14.8 Central Heating Temperature Sensor (NTC) (Fig. 84)

1. Drain the boiler primary circuit. Pull the plug off the safety thermostat and disconnect the in-line plug in the sensor wire.

2. Unscrew the sensor from the heat exchanger. Reassemble the new sensor in reverse order, using a new sealing washer.

14.9 Water Pressure Switch (Fig. 84a)

1. Drain the boiler primary circuit.

2. Pull the two wires of the microswitch.

3. Draw the securing clip forwards to release the assembly. The clip is captive and does not need to be fully removed.

4. Reassemble in reverse order.

14.10 DHW Temperature Sensor (NTC) (Fig. 85)

1. Turn off the mains water supply and draw off the residual domestic hot water.

2. Ease aside the retaining tab on the sensor and disconnect the electrical plug.

3. Remove the retaining clip and pull the sensor out of the pocket.

4. Reassemble in reverse order, ensuring the sensor is fully inserted. The plug will only fit one way.

 © Baxi Heating UK Ltd 2012

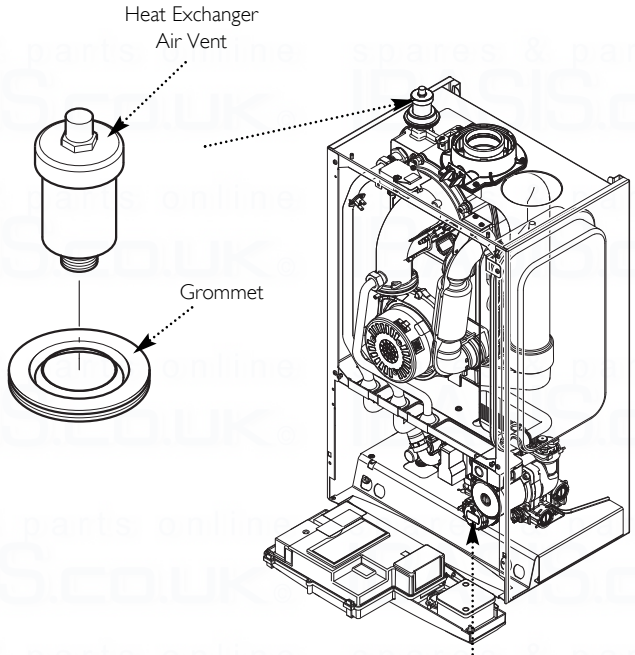

Fig. 86

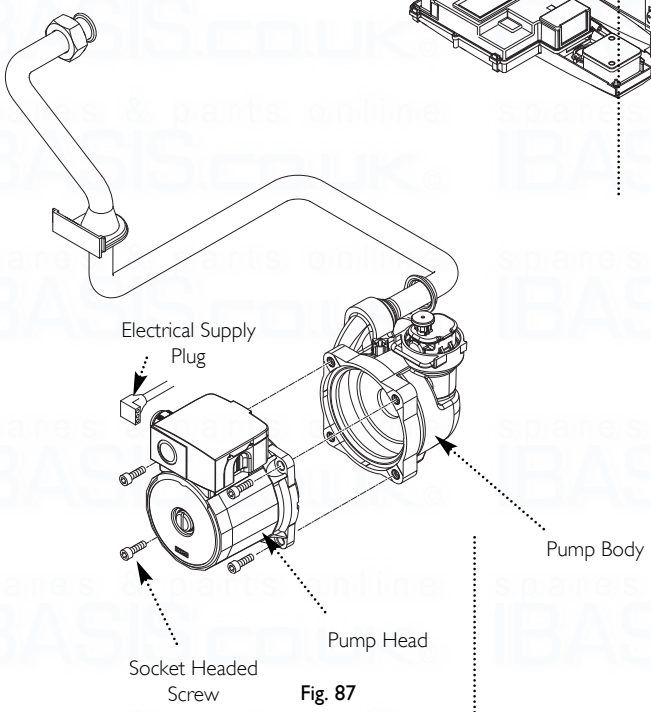

Fig. 87

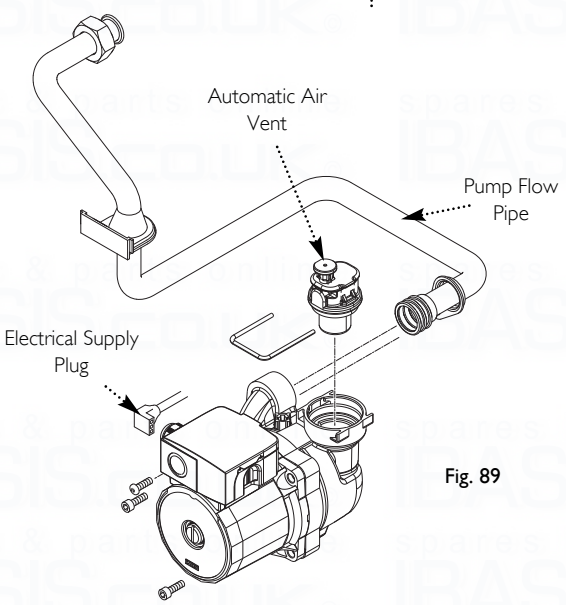

Fig. 89

14.11 Heat Exchanger Automatic Air Vent (Fig. 86)

1. Drain the boiler primary circuit and unscrew the automatic air vent from the pump body.

2. Examine the 'O' ring seal, replacing if necessary, and fit it to the new automatic air vent.

3. Reassemble in reverse order, transferring the grommet to the new vent.

4. Ensure that the grommet is sealed correctly to the boiler top panel.

14.12 Pump - Head Only (Fig. 87)

1. Disconnect the electrical supply plug from the pump.

2. Drain the boiler primary circuit and remove the socket head screws securing the pump head to the body and draw the head away.

3. Reassemble in reverse order.

14.13 Pump - Complete (Fig. 89)

1. Disconnect the electrical supply plug from the pump.

2. Drain the boiler primary circuit and undo the three screws securing the body to the inlet assembly and pump flow pipe. Draw the complete pump forwards.

3. Pull off the securing clip and remove the Automatic Air Vent. Transfer them to the new pump body.

4. Examine the 'O' ring seals, replacing if necessary and reassemble in reverse order.

14.14 Automatic Air Vent (Fig. 89)

1. Drain the boiler primary circuit and remove the pump head as described in 14.12.

2. Also for ease of access disconnect the braided hose from the expansion vessle. then pull off the securing clip and remove the Automatic Air Vent.

3. Fit the new Automatic Air Vent and ensure the cap is pulled up to open the vent. Reassemble in reverse order.

© Baxi Heating UK Ltd 2012

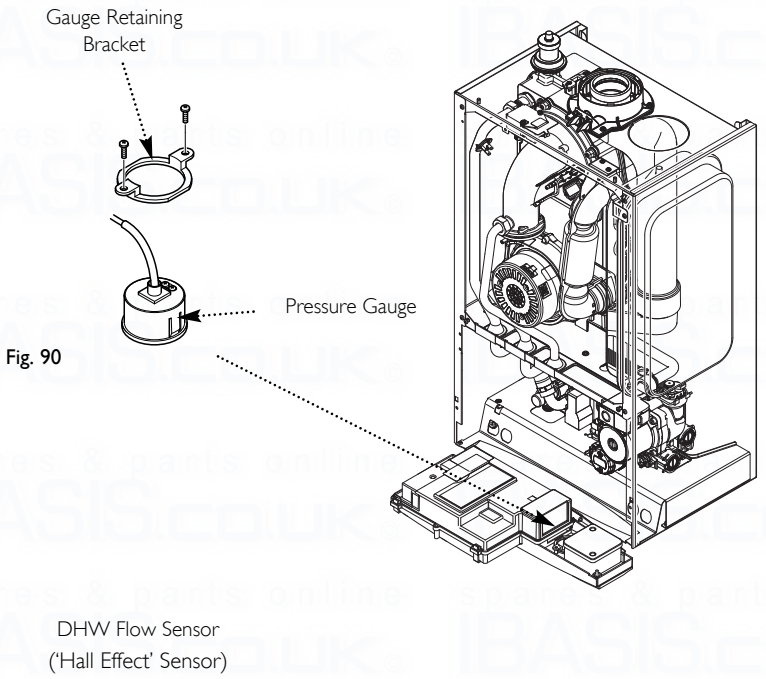

Fig. 90

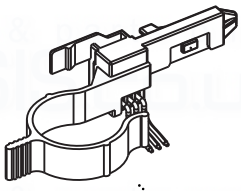

Fig. 92

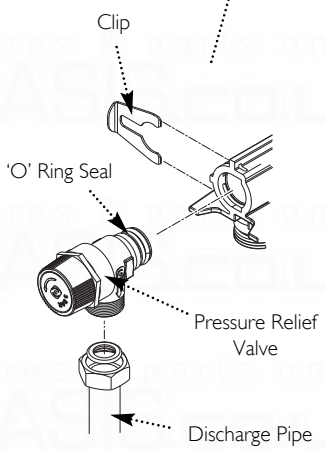

Fig. 93

14.15 Pressure Gauge (Figs. 90 & 91)

1. Drain the boiler primary circuit and remove the clip securing the pressure gauge capillary.

2. Undo the screws securing the gauge retaining bracket to the facia.

3. Fit the new gauge, ensuring that the capillary is routed to prevent any sharp bends. Reassemble in reverse order.

14.16 DHW Flow Sensor ('Hall Effect' Sensor) (Fig. 92)

1. Pull the sensor off the DHW inlet manifold.

2. Disconnect the plug from the sensor and connect it to the new component.

3. Fit the new sensor, ensuring it is fully engaged over the manifold.

14.17 Safety Pressure Relief Valve (Fig. 93)

1. Drain the primary circuit.

2. Disconnect the discharge pipe from the valve. Pull off the clip retaining the valve and withdraw it from the outlet assembly.

3. Fit the new valve and 'O' ring seal and reconnect the discharge pipe.

Discharge Pipe

 © Baxi Heating UK Ltd 2012

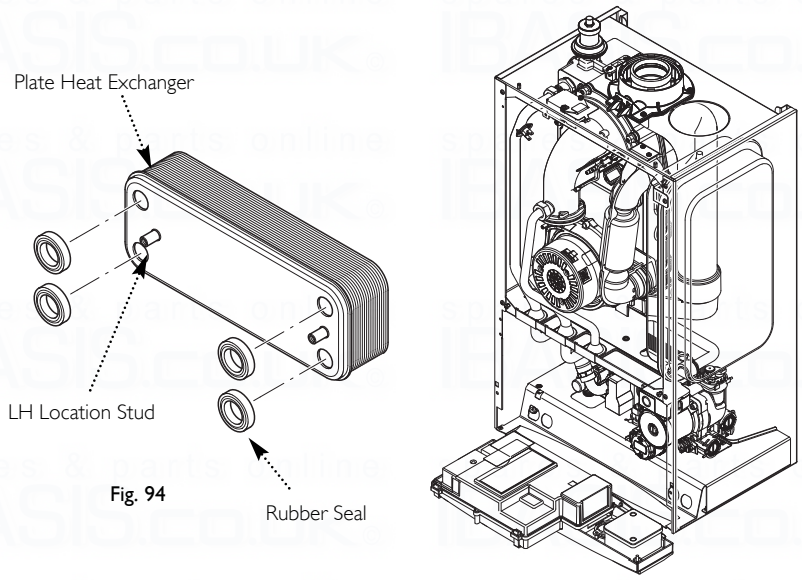

Fig. 94

14.18 Plate Heat Exchanger (Fig. 94)

1. Drain the boiler primary circuit and remove the gas valve as described in Section 14.23.

2. Remove the clip securing the expansion vessel braided hose to the hydraulic assembly.

3. Undo the screws securing the plate heat exchanger to the hydraulic assembly.

4. Withdraw the heat exchanger upwards and to the left, holding the condensate hose to one side

Seals

5. There are four rubber seals between the hydraulic assembly and heat exchanger which may need replacement.

6. Ease the seals out of the hydraulic assembly. Replace carefully, ensuring that the seal is inserted parallel and pushed fully in.

7. When fitting the new heat exchanger note that the right hand location stud is offset towards the centre more than the left hand one.

8. Reassemble in reverse order.

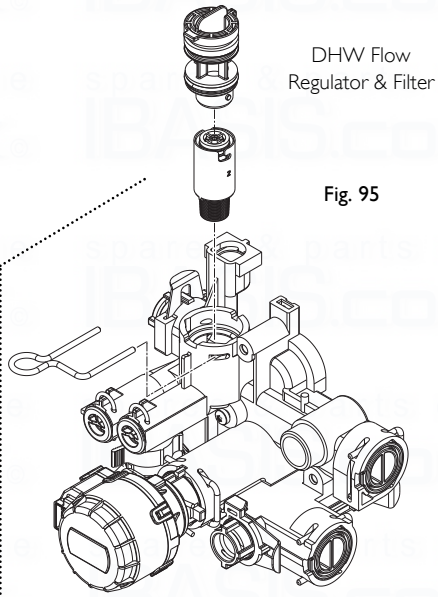

Fig. 95

14.19 DHW Flow Regulator & Filter (Fig. 95)

1. Pull out the securing clip and prise the regulator and filter assembly out of the hydraulic inlet block.

2. Twist the body to unlock the bayonet connection and remove the regulator.

3. Examine and clean the filter, and reassemble in reverse order.order.

14.20 Diverter Valve Motor (Fig. 96)

1. Undo the screw securing the electrical plug to the motor unit. Disconnect the plug.

2. Hold the motor unit in place against the spring pressure of the valve and remove the securing clip.

3. Remove the motor.

4. When fitting the new motor it will be necessary to hold the unit firmly while depressing the valve return spring.

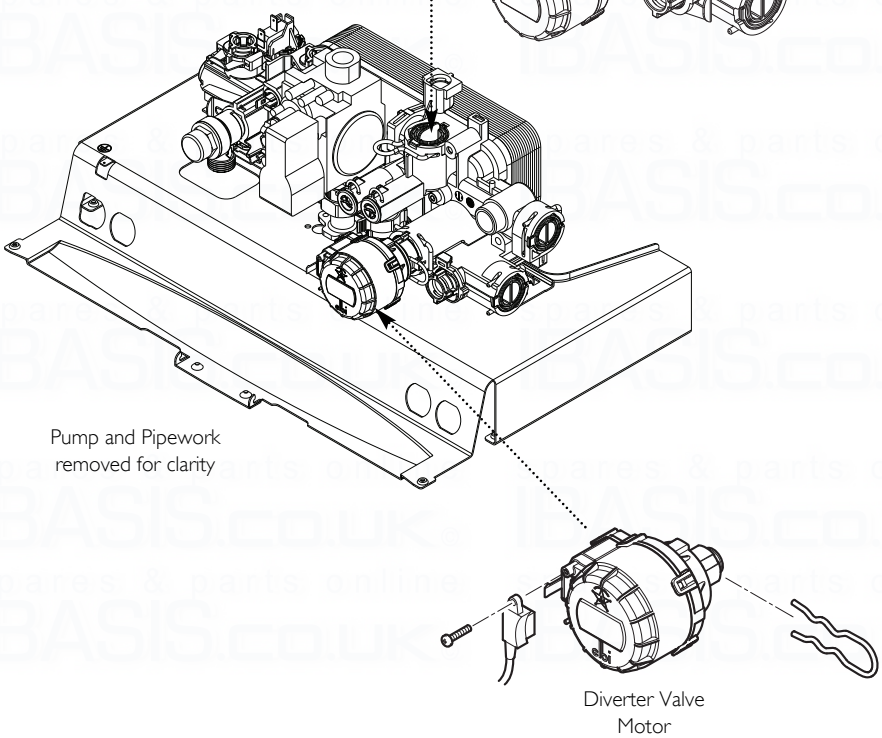

Fig. 96

© Baxi Heating UK Ltd 2012

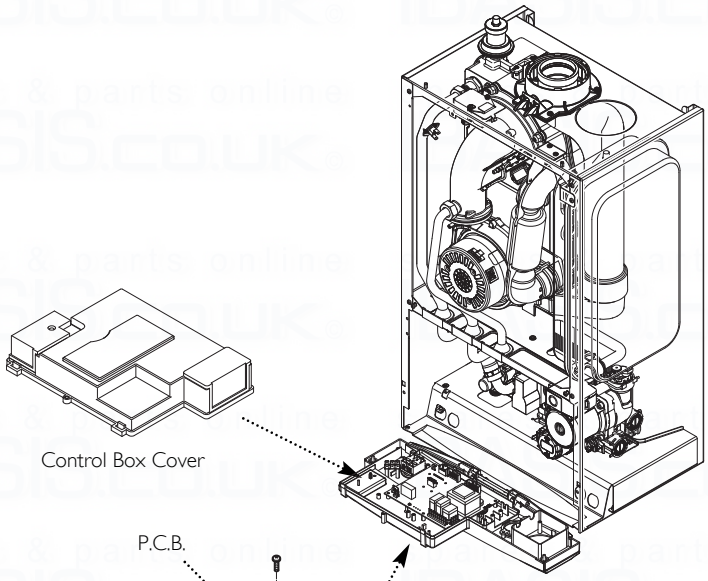

Fig. 97

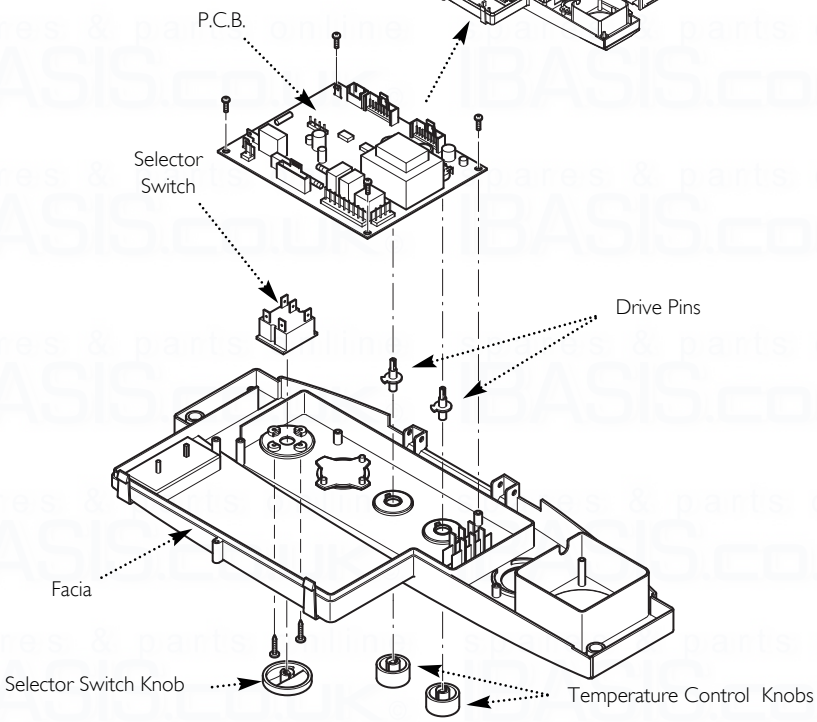

Fig. 98

14.21 P.C.B. (Figs. 97 & 98)

1. Note the settings of the temperature control knobs, rotate them fully anticlockwise and carefully pull them off the drive pins.

2. Completely undo the screws securing the control box cover and release the cover retaining barbs from their slots. Disengage the rear of the cover from the control box hinge pin.

3. Note the position of all plugs and wires on the P.C.B. and disconnect them.

4. Undo the securing screws and remove the P.C.B. Transfer the control knob drive pins to the new P.C.B. and turn them fully anticlockwise.

5. Reassemble in reverse order, ensuring that the temperature controllers are reset to their previous positions.

14.22 Selector Switch (Figs. 97 & 98)

1. Note the setting of the selector switch knob and carefully pull it off the facia.

2. Completely undo the screws securing the control box cover and release the cover retaining barbs from their slots. Disengage the rear of the cover from the control box hinge pin.

3. Note the position of the electrical connections and the orientation of the switch. Remove the electrical connections.

4. Remove the screws securing the switch to the facia panel.

5. Fit the new switch, ensuring that it is correctly positioned and reassemble in reverse order.

 © Baxi Heating UK Ltd 2012

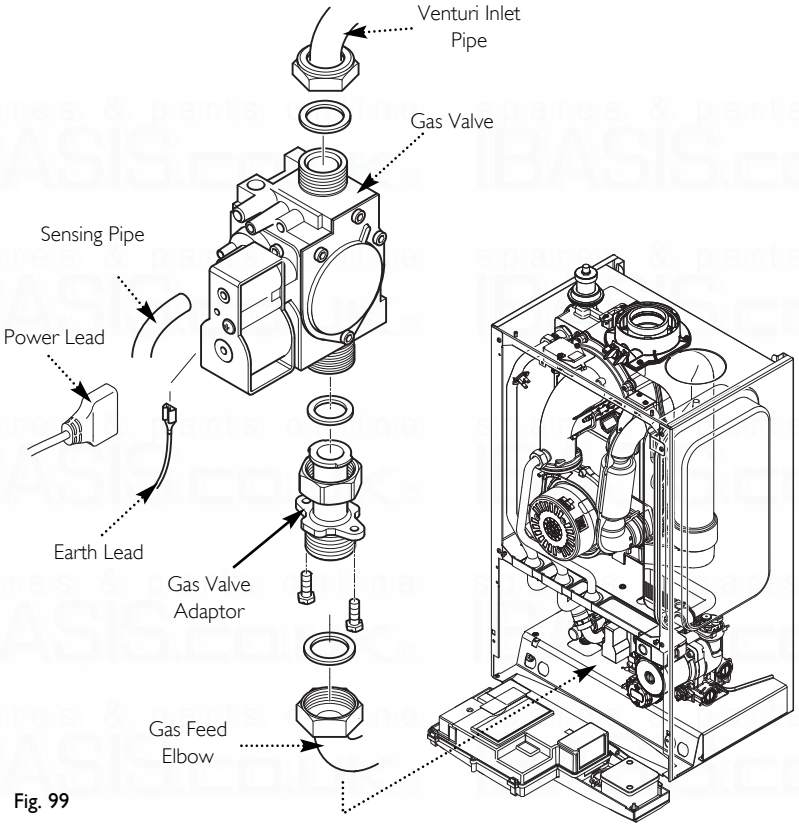

Fig. 99

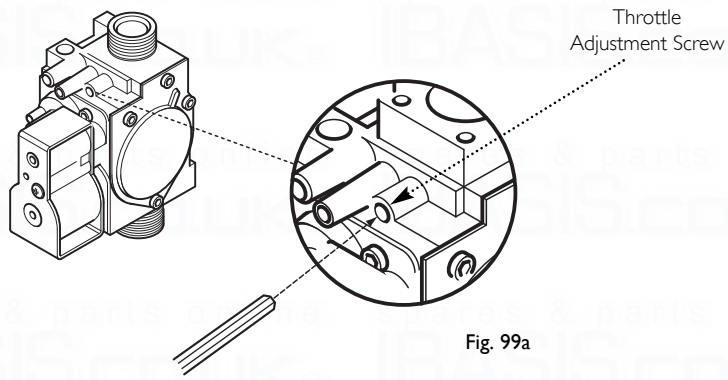

Fig. 99a

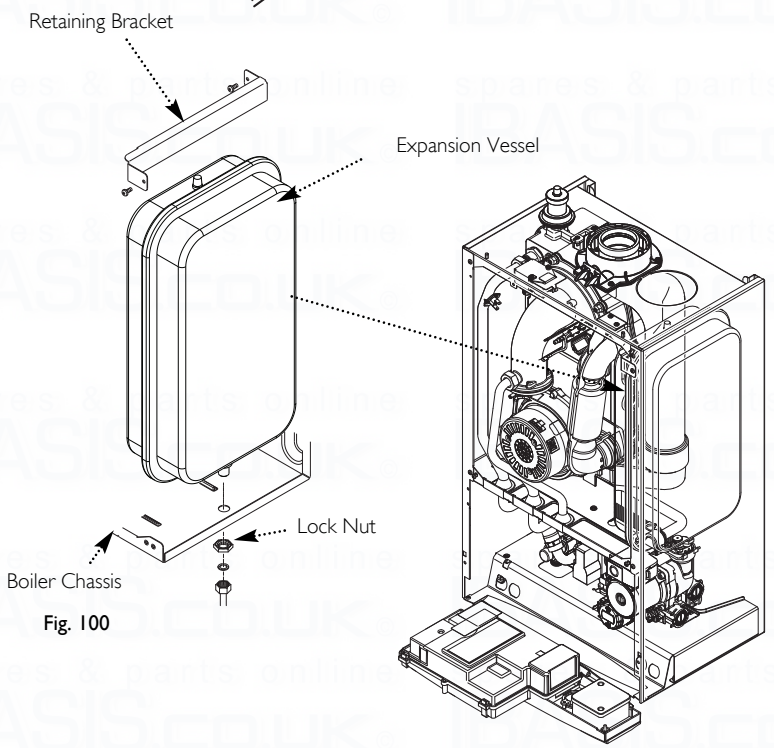

Fig. 100

14.23 Gas Valve (Fig. 99)

IMPORTANT: After replacing the valve the CO_2 must be checked and adjusted as detailed in Section 15.0 Setting the Gas Valve. Only change the valve if a suitable calibrated combustion analyser is available, operated by a competent person - see section 13.1.

1. Turn the gas cock off and undo the nut on the gas feed elbow under the boiler.

2. Remove the screws securing the gas valve to the boiler bottom panel.

3. Pull off the power lead, earth lead and sensing pipe.

4. Undo the nut on the gas pipe at the gas/air inlet and the gas valve. Remove the pipe, taking care not to lose the sealing washers. Remove the valve.

5. Reassemble in reverse order, ensuring that all seals are in place.

NOTE: To assist the boiler to light prior to final setting, use a suitable hexagon key to wind out the Throttle Adjustment Screw until it is flush with the valve body, then turn the screw 4 full turns clockwise (Fig. 99a). If the boiler will not light, or the correct CO_2 cannot be achieved contact the 'heateam' technical helpline.

14.24 Expansion Vessel (Fig. 100)

1. Drain the boiler primary circuit and undo the nut on the vessel connection pipe.

2. Remove the screw retaining the air inlet pipe, and swing the pipe to one side.

3. Undo and remove the locknut and spring washer securing the vessel spigot to the boiler lower panel.

4. Remove the bracket and vessel from the boiler.

5. Locate the retaining bracket on the upper flange of the new vessel and fit to the boiler.

6. Examine the sealing washer, replacing if necessary, and reassemble in reverse order.

© Baxi Heating UK Ltd 2012

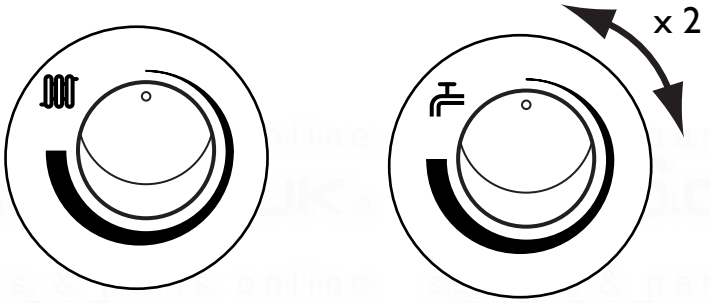

Central Heating Temperature Control

Fig. 101

Domestic Hot Water Temperature Control

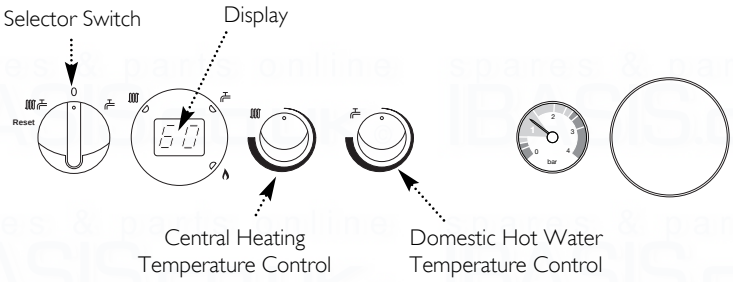

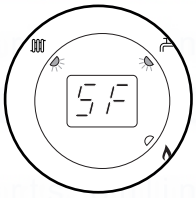

Fig. 102

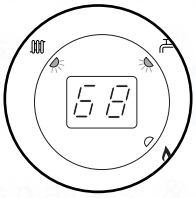

Fig. 103

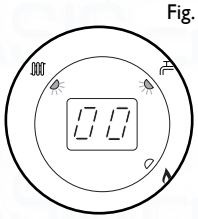

Fig. 104

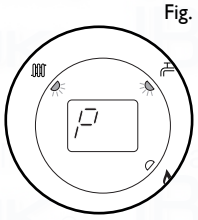

Fig. 105

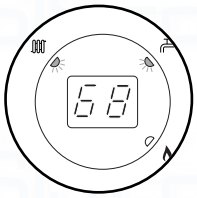

Fig. 106

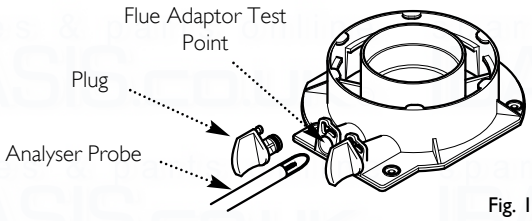

Fig. 107

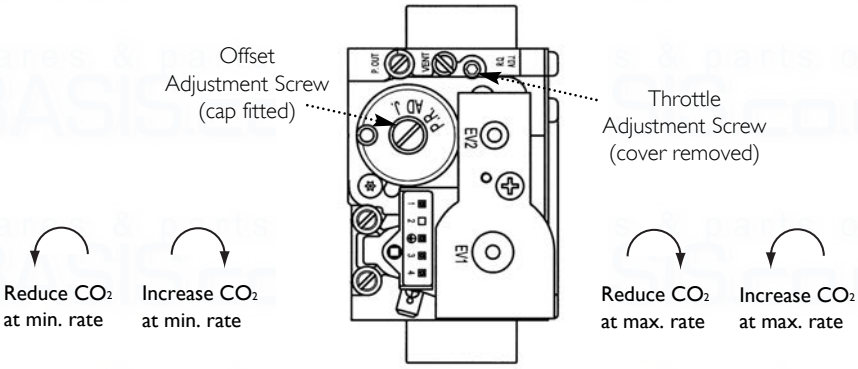

Fig. 108

If the CO_2 is reset at minimum rate it must be rechecked at maximum rate again and adjusted if required. If the CO_2 is reset at maximum rate it must be rechecked at minimum rate and adjusted if required.

Do not turn the adjustment screws more than 1/8 of a turn at a time. Allow the analyser reading to settle before any further adjustment

15.0 Setting the Gas Valve

15.1 Setting the Gas Valve (CO_2 check)

IMPORTANT: The CO_2 must be only be checked and adjusted to set the valve if a suitable calibrated combustion analyser is available, operated by a competent person - see Section 13.1

1. The combustion (CO_2) may be checked after running the boiler for several minutes. To do this it is necessary to set the boiler to 'Calibration Mode'.

2. **Ensure that all external controls are calling for heat**. The actual current boiler temperature is shown on the display.

3. Turn both temperature control knobs fully anticlockwise, then quickly turn the DHW temperature knob 1/4 clockwise twice and back fully anticlockwise (Fig. 101).

4. The display will now alternate between 'SF' and the current boiler temperature and both green LEDs will flash (Figs. 102 & 103).

5. Turn the CH temperature knob fully clockwise. As the knob is turned the display will change, indicating the fan speed.

6. The display will show '00', indicating maximum rate, then revert to 'P ' alternating with the current boiler temperature (Figs 104, 105 & 106).

7. Remove the plug from the flue adaptor test point. Insert the analyser probe and allow time for the reading to settle (Fig. 107).

The CO_2 should be 9.0% + 0.0 - 0.4 (25)
The CO_2 should be 9.1% + 0.0 - 0.4 (30)

8. It is possible to alter the CO_2 by adjustment of the gas valve. Remove the plastic cover from the Throttle Adjustment Screw. At maximum rate the Throttle Adjustment Screw should be turned, using a suitable hexagon key, until the correct reading is obtained (Fig. 108). Turning clockwise will reduce the CO_2. Anticlockwise will increase the CO_2.

9. The CO_2 must then be checked at minimum rate. Turn the CH temperature knob fully anticlockwise. As the knob is turned the display will change, indicating the fan speed. When the display reads ' 0' the boiler runs at minimum rate.

The CO_2 should be 8.4% + 0.0 - 0.4

10. With the boiler on minimum, the 'Min. Rate' adjustment screw must be altered, using a suitable hexagon key, after removing the cap (Fig. 108). If the CO_2 is reset at either boiler rate it must be rechecked at the other rate and also adjusted if required.

11. The 'Calibration Function' is maintained for 20 minutes unless the maximum CH temperature is exceeded. The function can be disabled at any time by turning the DHW knob.

12. **Check the Combustion Performance (CO/CO_2 ratio). This must be less than 0.004**.

 © Baxi Heating UK Ltd 2012

16.1 Illustrated Wiring Diagram

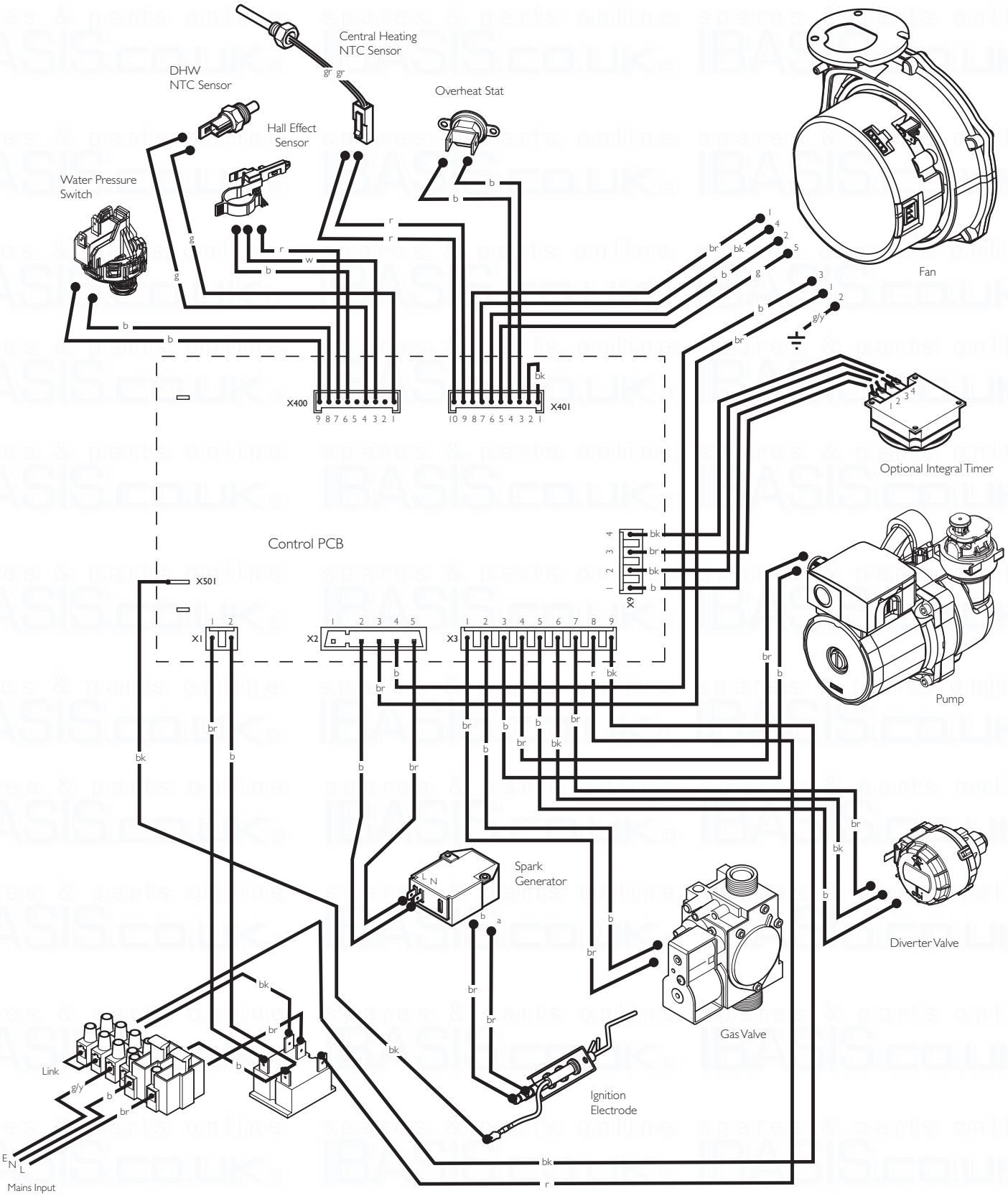

br	- brown	g	- green
bk	- black	g/y	- green / yellow
b	- blue	r	- red
w	- white	gr	- grey

© Baxi Heating UK Ltd 2012

304

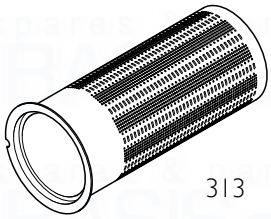
313

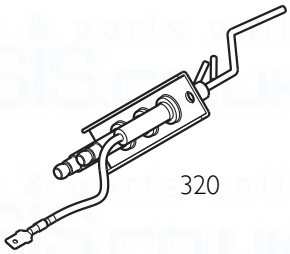
320

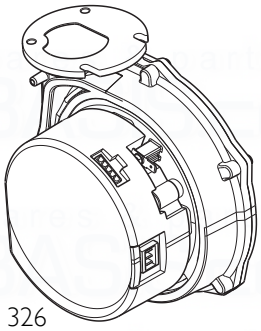
326

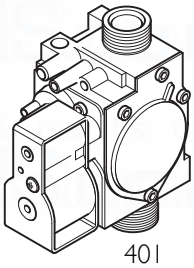
401

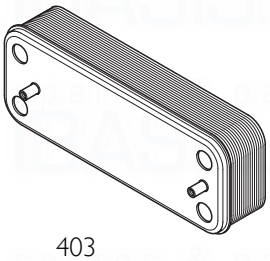
403

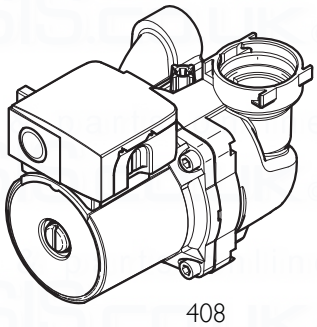
408

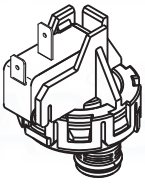
411

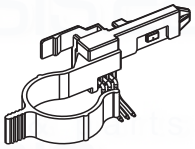
413

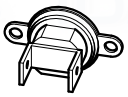
420

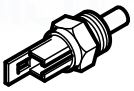
421

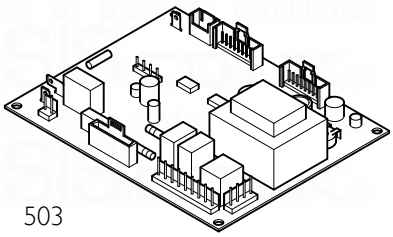
503

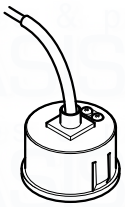
504

Short Parts List

Key No.	Description	Manufacturers Part No.
304	NTC Sensor CH	5130291
313	Burner	5130292
320	Electrode Assembly	5130293
326	Fan	5121447
401	Gas Valve	720301001
403	Plate Heat Exchanger	720776401
408	Pump	720063001
411	Water Pressure Microswitch	720063201
413	DHW Hall Effect Sensor	720061801
420	Overheat Thermostat	5114729
421	NTC Sensor DHW	5114725
503	PCB 25 PCB 30	5131264 5131265
504	Pressure Gauge	720061901

 © Baxi Heating UK Ltd 2012

18.0 Fault Finding

18.1 Initial Fault Finding Checks

1. Check that gas, water and electrical supplies are available at the boiler.

2. Electrical supply = 230V ~ 50 Hz.

3. CH water system pressurised to 0.5 bar minimum when the boiler is cold.

4. The preferred minimum gas pressure is 20 mbar.

5. Carry out electrical system checks, i.e. Earth Continuity, Resistance to Earth, Short Circuit and Polarity with a suitable meter.

NOTE: These checks must be repeated after any servicing or fault finding.

6. Ensure all external controls are calling for heat and check all external and internal fuses. Before any servicing or replacement of parts, ensure the gas and electrical supplies are isolated.

NOTE: When instructed to turn the selector to the reset position turn the selector switch fully anticlockwise against the spring pressure to the reset position and hold for 5 seconds to reset the boiler.

18.2 Error Codes

1. If a fault occurs on the boiler an error code may be shown by the facia display.

2. The codes are either two or three digit, preceded by the letter 'E'. For example, code E133 will be displayed by 'E1' alternating with '33'. E50 is shown as 'E' then '50'

E20, E28 & E50 indicate faulty or incorrect components.

E110 shows overheat of the primary water.

E119 is displayed when the primary water pressure is less than 0.5 bar.

E133 indicates that the gas supply has been interrupted, ignition has failed or the flame has not been detected.

E125 is displayed in either of two situations:-
i) If within 15 seconds of the burner lighting the boiler temperature has not changed by 1°.
ii) If within 10 minutes of the burner lighting the boiler temperature twice exceeds the selected temperature by 30°.
In these instances poor primary circulation is indicated.

3. By turning the selector switch to the 'Reset' position for a minimum of 5 seconds when E110 & E133 are displayed it is possible to relight the boiler.

4. If this does not have any effect, or the codes are displayed regularly further investigation is required.

Table Of Error Codes

E20	Central Heating NTC Fault
E28	Incorrect PCB Fitted
E50	Hot Water NTC Fault
E110	Safety Thermostat Operated
E119	Water Pressure Switch Not Operated
E125	Circulation Fault (Primary Circuit)
E133	Interruption Of Gas Supply or Flame Failure
E160	Fan or Fan Wiring Fault

© Baxi Heating UK Ltd 2012

Refer to Section 16.0 "Illustrated Wiring Diagram" for position of terminals and components

Central Heating - Follow operational sequence (do

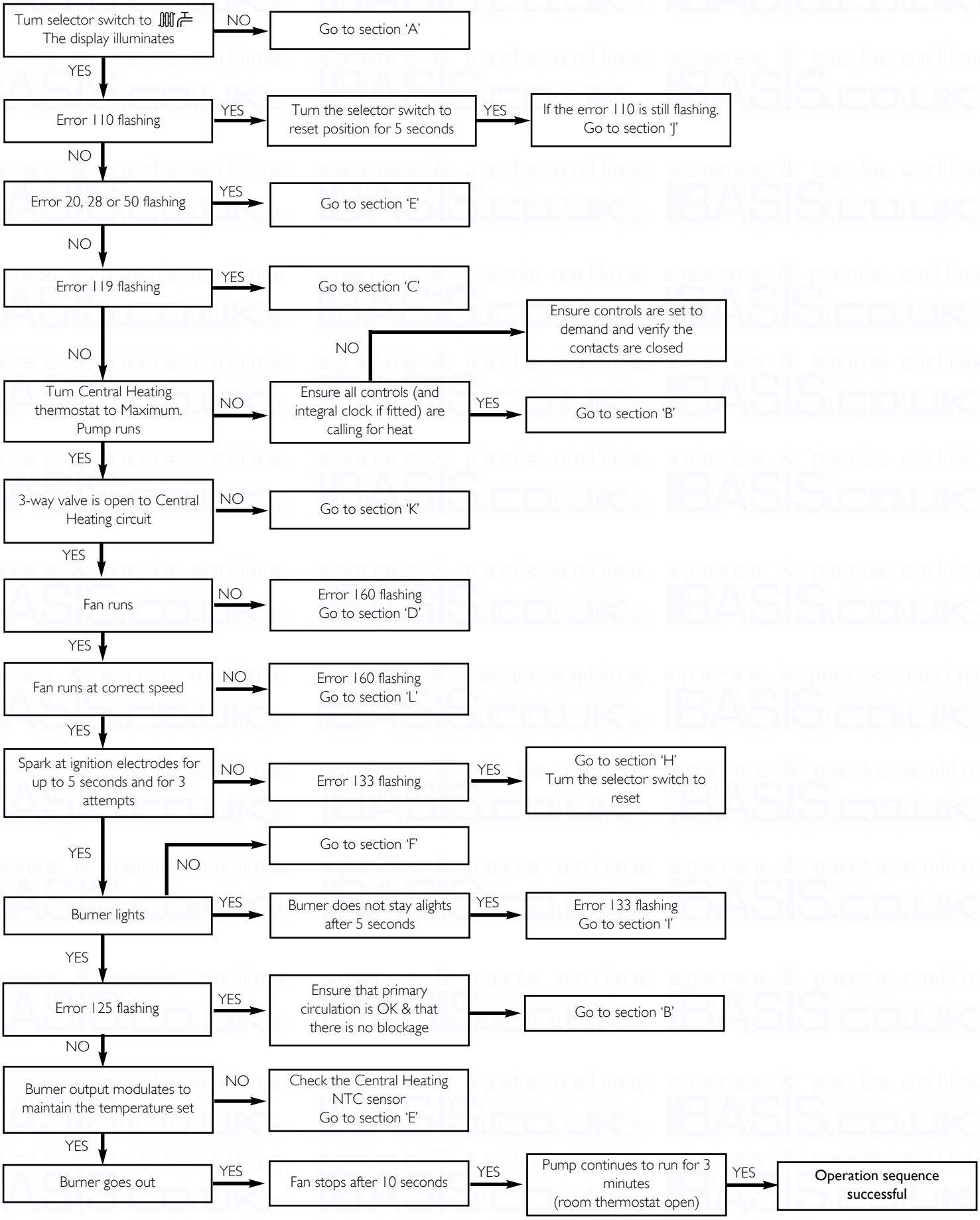

 © Baxi Heating UK Ltd 2012

Domestic Hot Water - Follow operational sequence

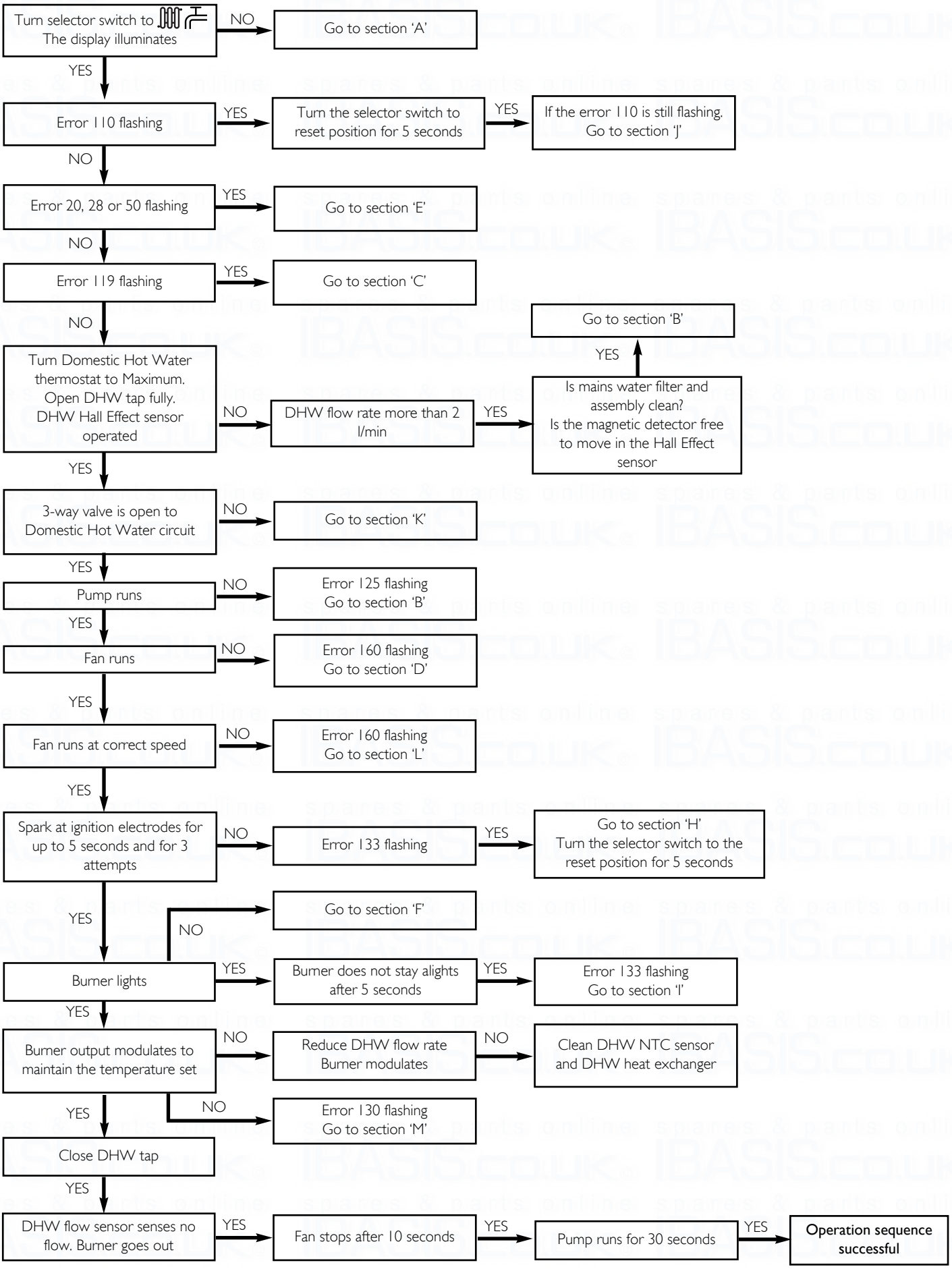

© Baxi Heating UK Ltd 2012

Fault Finding Solutions Sections

A

Is there 230V at:

1. Main terminals L and N — NO → Check electrical supply
2. Main terminal fuse — NO → Replace fuse
3. PCB - X1 connector terminals 1,2 — NO → Check wiring

Check electrical supply / Replace fuse / Check wiring → Display illuminated — NO → Replace PCB

B

Is there 230V at:

1. Pump — YES → If pump jammed, release — NO → Replace pump
2. PCB - X3 connector terminals 3 & 4 — NO → Replace PCB
   - YES → Change pump supply cable

C

1. CH system pressure less than 0.5 bar — YES → Re-pressurise system
   - NO → Check connection water pressure switch terminal COM - NO and PCB connector X400 terminals 3,4 — YES → Replace water pressure switch
2. Check the tap of the automatic air vent is opened — NO → Open the automatic air vent

D

1. Fan connections correct at fan. PCB - X2 connector, is 230V AC across terminals 5 & 7
   - YES → Fan jammed or faulty winding — YES → Replace fan
   - NO → Replace PCB

 © Baxi Heating UK Ltd 2012

E

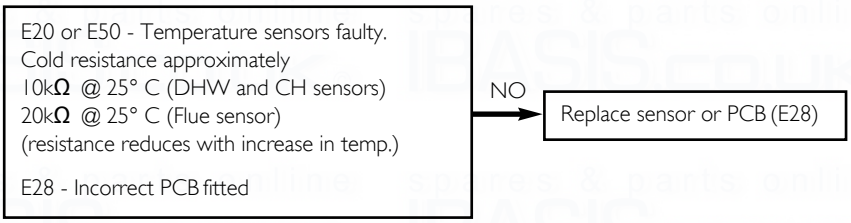

F

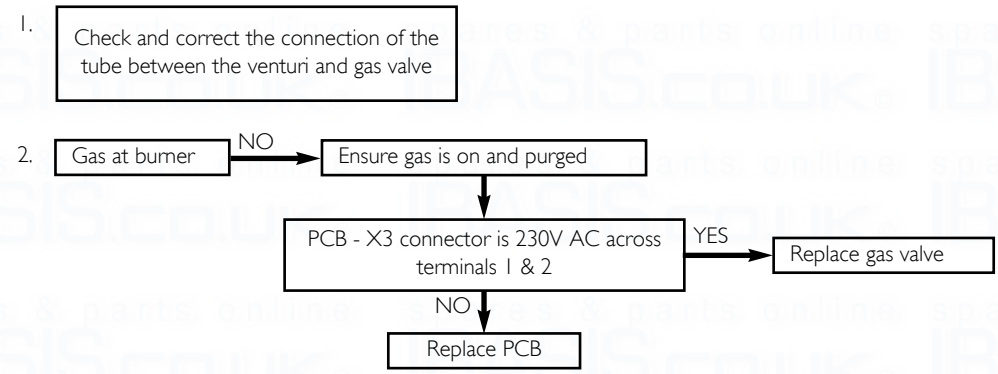

G

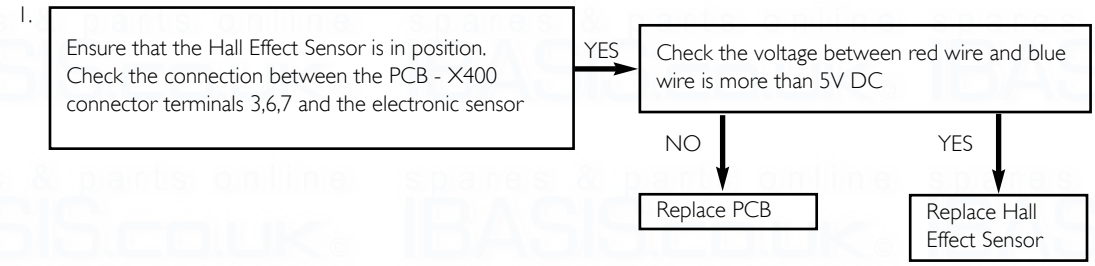

H

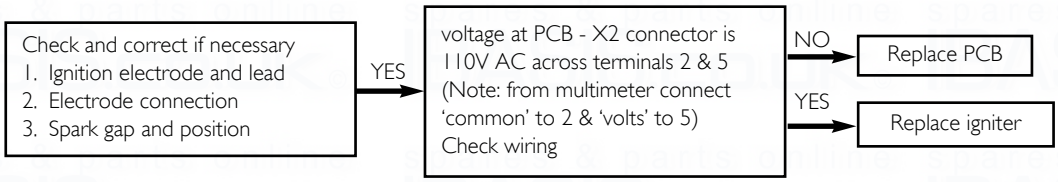

© Baxi Heating UK Ltd 2012

I

1. Check supply pressure at the gas valve:-
   Minimum 17 mbar

2. Check and correct if necessary
   1. The mechanical set of the gas valve
   (CO2 values - see instruction)
   2. Flame sensing electrode and lead connections
   3. Flame sensing electrode position
   4. Spark Electrode gap - 4.0 ± 0.5
   4. Spark Electrode to burner - 8.0 ± 1.0

   Flame current should be more than 0.5 μ A
   - YES → Replace PCB
   - NO → Replace flame sensing electrode

J

1. Overheat thermostat operated or faulty, i.e. continuity across thermostat terminals
   - NO → Allow to cool. Continuity across thermostat terminals more than 1.5 ohm
     - YES → Replace safety thermostat
   - YES → Replace PCB

K

Is there 230V at:

1. Motor 3-way valve
   - YES → Replace motor 3-way valve
2. PCB - X3 connector terminals
   5 & 6 central heating mode
   5 & 7 domestic hot water mode
   - NO → Replace PCB
   - YES → Change pump supply cable

L

1. Fan connections correct at fan.
   PCB - X401 connector terminals 5,6,7 & 8
   - YES → Replace fan

M

1. Temperature sensors faulty.
   Cold resistance approximately
   10kΩ @ 25° C (CH sensor)
   (resistance reduces with increase in temp.)
   - NO → Replace sensor

2. If pump is running the heat exchanger could be obstructed
   - YES → Replace heat exchanger

 © Baxi Heating UK Ltd 2012

19.0 Notes

© Baxi Heating UK Ltd 2012

This Commissioning Checklist is to be completed in full by the competent person who commissioned the boiler as a means of demonstrating compliance with the appropriate Building Regulations and then handed to the customer to keep for future reference.

Failure to install and commission according to the manufacturer's instructions and complete this Benchmark Commissioning Checklist will invalidate the warranty. This does not affect the customer's statutory rights

Customer Name ____________ Telephone Number ____________

Address ____________

Boiler Make and Model ____________

Boiler Serial Number ☐☐☐

Commissioned by *(print name)* ____________ Gas Safe Register Number ____________

Company Name ____________ Telephone Number ____________

Company Address ____________

____________ Commissioning Date ____________

To be completed by the customer on receipt of a Buildings Regulations Compliance Certificate*:

Building Regulations Notification Number *(if applicable)* ____________

CONTROLS **Tick the appropriate boxes**

Time and Temperature Control to Heating	Room Thermostat and Programmer/Timer ☐	Programmable Room Thermostat ☐	Load/Weather Compensation ☐	Optimum Start Control ☐
Time and Temperature Control to Hot Water			Cylinder Thermostat and Programmer/Timer ☐	Combination Boiler ☐
Heating Zone Valves			Fitted ☐	Not Required ☐
Hot Water Zone Valves			Fitted ☐	Not Required ☐
Thermostatic Radiator Valves			Fitted ☐	Not Required ☐
Automatic Bypass to System			Fitted ☐	Not Required ☐
Boiler Interlock				Provided ☐

ALL SYSTEMS

The system has been flushed and cleaned in accordance with BS7593 and boiler manufacturer's instructions — Yes ☐

What system cleaner was used? ____________

What inhibitor was used? ____________ Quantity ☐ *litres*

CENTRAL HEATING MODE **Measure and Record:**

Gas Rate	☐ m^3/hr	OR		☐ ft^3/hr
Burner Operating Pressure (if applicable)	☐ mbar	OR	Gas Inlet Pressure	☐ mbar
Central Heating Flow Temperature				☐ °C
Central Heating Return Temperature				☐ °C

COMBINATION BOILERS ONLY

Is the installation in a hard water area? (above 200ppm) — Yes ☐ No ☐

If yes and if required by the manufacturer, has a water scale reducer been fitted? — Yes ☐ No ☐

What type of scale reducer has been fitted? ____________

DOMESTIC HOT WATER MODE **Measure and Record**

Gas Rate	☐ m^3/hr	OR		☐ ft^3/hr
Burner Operating Pressure (at maximum rate)	☐ mbar	OR	Gas Inlet Pressure (at maximum rate)	☐ mbar
Cold Water Inlet Temperature				☐ °C
Hot Water has been checked at all outlets			Yes ☐ Temperature	☐ °C
Water Flow Rate				☐ *l/min*

CONDENSING BOILERS ONLY

The condensate drain has been installed in accordance with the manufacturer's instructions and/or BS5545/BS6798 — Yes ☐

If the condensate pipe terminates externally, has the pipe diameter been increased and weatherproof insulation fitted? — Yes ☐

ALL INSTALLATIONS

If required by the manufacturer, record the following — CO_2 ☐ % OR CO ☐ *ppm* OR CO/CO_2 Ratio ☐

The heating and hot water system complies with the appropriate Building Regulations — Yes ☐

The boiler and associated products have been installed and commissioned in accordance with manufacturer's instructions — Yes ☐

The operation of the boiler and system controls have been demonstrated to and understood by the customer — Yes ☐

The manufacturer's literature, including Benchmark Checklist and Service Record, has been explained and left with the customer — Yes ☐

Commissioning Engineer's Signature ____________

Customer's Signature ____________

(To confirm satisfactory demonstration and receipt of manufacturer's literature)

*All installations in England and Wales must be notified to Local Authority Building Control (LABC) either directly or through a Competent Persons Scheme. A Building Regulations Compliance Certificate will then be issued to the customer.

benchmark COLLECTIVE MARK — THE MARK OF QUALITY FOR THE INSTALLATION, COMMISSIONING AND SERVICING OF DOMESTIC HEATING AND HOT WATER SYSTEMS

© Heating and Hotwater Industry Council (HHIC)

Service Record

It is recommended that your heating system is serviced regularly and that the appropriate Service Interval Record is completed.

Service Provider
Before completing the appropriate Service Record below, please ensure you have carried out the service as described in the manufacturer's instructions.

Always use the manufacturer's specified spare part when replacing controls.

Service 1 Date:
Engineer Name:
Company Name:
Telephone No.
Gas Safe Register No.
Comments:
Signature:

Service 2 Date:
Engineer Name:
Company Name:
Telephone No.
Gas Safe Register No.
Comments:
Signature:

Service 3 Date:
Engineer Name:
Company Name:
Telephone No.
Gas Safe Register No.
Comments:
Signature:

Service 4 Date:
Engineer Name:
Company Name:
Telephone No.
Gas Safe Register No.
Comments:
Signature:

Service 5 Date:
Engineer Name:
Company Name:
Telephone No.
Gas Safe Register No.
Comments:
Signature:

Service 6 Date:
Engineer Name:
Company Name:
Telephone No.
Operative ID No.
Comments:
Signature:

Service 7 Date:
Engineer Name:
Company Name:
Telephone No.
Gas Safe Register No.
Comments:
Signature:

Service 8 Date:
Engineer Name:
Company Name:
Telephone No.
Gas Safe Register No.
Comments:
Signature:

Service 9 Date:
Engineer Name:
Company Name:
Telephone No.
Gas Safe Register No.
Comments:
Signature:

Service 10 Date:
Engineer Name:
Company Name:
Telephone No.
Gas Safe Register No.
Comments:
Signature:

All descriptions and illustrations provided in this leaflet have been carefully prepared but we reserve the right to make changes and improvements in our products which may affect the accuracy of the information contained in this leaflet. All goods are sold subject to our standard Conditions of Sale which are available on request.

POTTERTON
A Trading Division of Baxi Heating UK Ltd (3879156)
Brooks House, Coventry Road, Warwick. CV34 4LL
After Sales Service 0844 871 1560 Technical Enquiries 0844 871 1555
Website www.potterton.co.uk
e&oe

PART OF BDR THERMEA

© Baxi Heating UK Ltd 2012

7209286 - 02 (7/12)