United Kingdom
**en**

POTTERTON

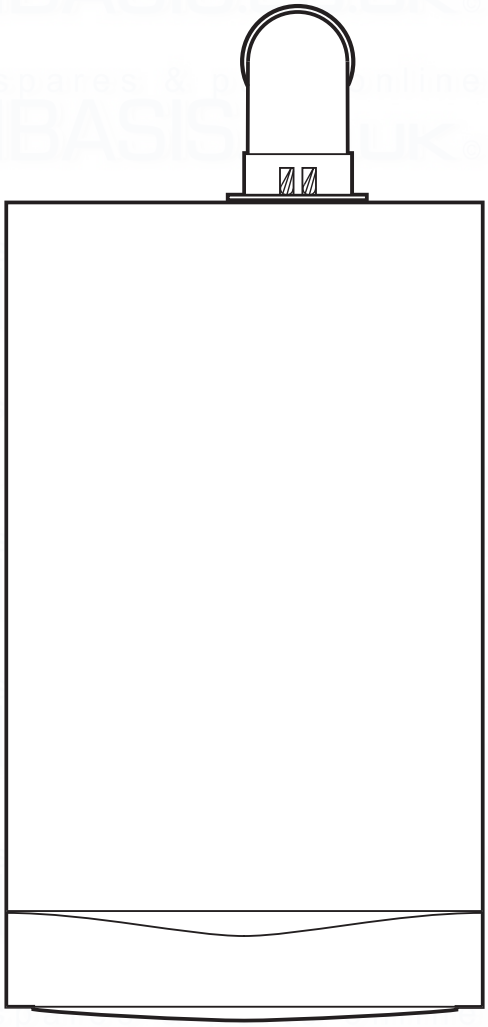

# Installation and Service Manual

Condensing System Boiler

## Promax System

12 - 15 -18 - 24 - 32

These instructions include the Benchmark Commissioning Checklist
and should be left with the user for safe keeping.

spares & parts online IBASIS.CO.UK

## Natural Gas

**Potterton Promax 12 System ErP**
G.C.N° 41 592 42
**Potterton Promax 15 System ErP**
G.C.N° 41 592 43
**Potterton Promax 18 System ErP**
G.C.N° 41 592 44
**Potterton Promax 24 System ErP**
G.C.N° 41 592 45
**Potterton Promax 32 System ErP**
G.C.N° 41 592 46

### The Benchmark Scheme

Benchmark places responsibilities on both manufacturers and installers. The purpose is to ensure that customers are provided with the correct equipment for their needs, that it is installed, commissioned and serviced in accordance with the manufacturer's instructions by competent persons and that it meets the requirements of the appropriate Building Regulations. The Benchmark Checklist can be used to demonstrate compliance with Building Regulations and should be provided to the customer for future reference.

Installers are required to carry out installation, commissioning and servicing work in accordance with the Benchmark Code of Practice which is available from the Heating and Hotwater Industry Council who manage and promote the Scheme. Visit **www.centralheating.co.uk** for more information.

**© Baxi Heating UK Ltd 2016** All rights reserved. No part of this publication may be reproduced or transmitted in any form or by any means, or stored in any retrieval system of any nature (including in any database), in each case whether electronic, mechanical, recording or otherwise, without the prior written permission of the copyright owner, except for permitted fair dealing under Copyrights, Designs and Patents Act 1988.

Applications for the copyright owner's permission to reproduce or make other use of any part of this publication should be made, giving details of the proposed use, to the following address:

The Company Secretary, Baxi Heating UK Ltd,
Brooks House, Coventry Road, Warwick. CV34 4LL

Full acknowledgement of author and source must be given.

**WARNING:** Any person who does any unauthorised act in relation to a copyright work may be liable to criminal prosecution and civil claims for damages.

### Building Regulations and the Benchmark Commissioning Checklist

Building Regulations (England & Wales) require notification of the installation of a heating appliance to the relevant Local Authority Building Control Department. From 1 April 2005 this can be achieved via a Competent Persons Self Certification Scheme as an option to notifying the Local Authority directly. Similar arrangements will follow for Scotland and will apply in Northern Ireland from 1 January 2006.

The Health & Safety Executive operates the 'Gas Safe Register', a self-certification scheme for gas heating appliances.

These arrangements represent a change from the situation whereby compliance with Building Regulations was accepted as being demonstrated by completion of the Benchmark Logbook (which was then left on site with the customer).

With the introduction of Self Certification Schemes, the Benchmark Logbook is being withdrawn. However, a similar document in the form of a commissioning checklist and service interval record is incorporated at the back of these instructions.

This company is a member of the Benchmark initiative and fully supports the aims of the programme. Its aim is to improve the standards of installation and commissioning of central heating systems in the UK and to encourage the regular servicing of all central heating systems to ensure safety and efficiency.

Building Regulations require that installations should comply with manufacturer's instructions. It is therefore important that the commissioning checklist is completed by the installer. The relevant section of Building Regulations only relates to dwellings. Therefore the checklist only applies if the appliance is being installed in a dwelling or some related structure.

The flowchart opposite gives guidance for installers on the process necessary to ensure compliance with Building Regulations.

CE 0086

energy saving trust endorsed product

IPX5D

benchmark COLLECTIVE MARK
THE MARK OF QUALITY FOR THE INSTALLATION, COMMISSIONING AND SERVICING OF DOMESTIC HEATING AND HOT WATER SYSTEMS

BSI™
*ISO 9001*
*FM 00866*

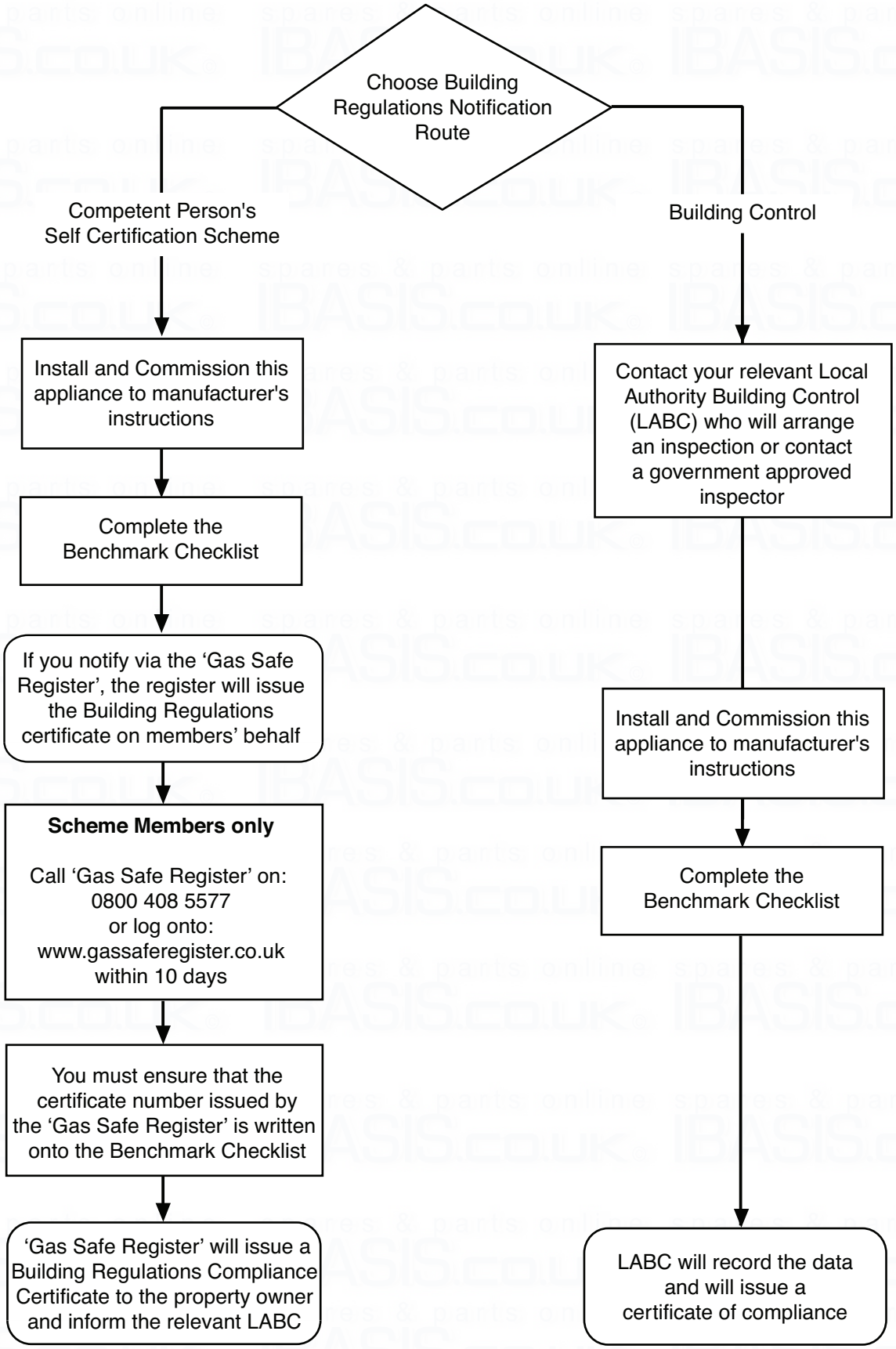


© Baxi Heating UK Ltd 2016

## IMPORTANT - Installation, Commissioning, Service & Repair

This appliance must be installed in accordance with the manufacturer's instructions and the regulations in force. Read the instructions fully before installing or using the appliance.

In GB, this must be carried out by a competent person as stated in the Gas Safety (Installation & Use) Regulations.

**Definition of competence:** A person who works for a Gas Safe registered company and holding current certificates in the relevant ACS modules, is deemed competent.

In IE, this must be carried out by a competent person as stated in I.S. 813 "Domestic Gas Installations".

The addition of anything that may interfere with the normal operation of the appliance without express written permission from the manufacturer or his agent could invalidate the appliance warranty. In GB this could also infringe the Gas Safety (Installation and Use) Regulations.

**Warning -** Check the information on the data plate is compatible with local supply conditions.

All Gas Safe registered engineers carry an ID card with their licence number and a photograph. You can check your engineer is registered by telephoning 0800 408 5500 or online at www.gassaferegister.co.uk

## Legislation

**This company declare that no substances harmful to health are contained in the appliance or used during appliance manufacture.**

**The appliance is suitable only for installation in GB and IE and should be installed in accordance with the rules in force, and only used in a suitably ventilated location.**

In GB, the installation must be carried out by a Gas Safe Registered Installer. It must be carried out in accordance with the relevant requirements of the:

- Gas Safety (Installation & Use) Regulations.
- The appropriate Building Regulations either The Building Regulations, The Building Regulations (Scotland), Building Regulations (Northern Ireland).
- The Water Fittings Regulations or Water Byelaws in Scotland.
- The Current I.E.E. Wiring Regulations.

Where no specific instructions are given, reference should be made to the relevant British Standard Code of Practice.

In IE, the installation must be carried out by a competent Person and installed in accordance with the current edition of I.S. 813 'Domestic Gas Installations', the current Building Regulations and reference should be made to the current ETCI rules for electrical installation.

**All systems must be thoroughly flushed and treated with inhibitor (see section 6.2).**

## Homologations

### CE Marking

### EC - Declaration of Conformity

Baxi Heating UK Limited being the manufacturer / distributor within the European Economic Area of the following

Potterton Promax 12 - 15 - 18 - 24 - 32 System ErP

declare that the above is in conformity with the provisions of the Council Directive

2009/142/EC 92/42/EEC 2004/108/EC 2006/95/EC
2009/125/EC 2010/30/EU

and has been subject to the following conformity procedures laid down in

Annex 2 - Article 3 of 2009/142/EC

under the supervision of the British Standards Institution, a Notified Body authorized by the United Kingdom Competent Authority, and carrying the Notified Body Number 0086.

Type test for purpose of Regulation 5 certified by:
Notified Body 0085.

Product/Production certified by:
Notified Body 0086.

For GB/IE only.

### Codes of Practice - refer to the most recent version

**In GB the following Codes of Practice apply:**

| Standard | Scope |
|---|---|
| BS 6891 | Gas Installation. |
| BS 5546 | Installation of hot water supplies for domestic purposes. |
| BS EN 12828 | Heating systems in buildings. |
| BS EN 14336 | Installation & commissioning of water based heating systems. |
| BS 6798 | Installation of gas fired hot water boilers. |
| BS 5440 Part 1 | Flues. |
| BS 5440 Part 2 | Ventilation. |
| BS 7074 | Expansion vessels and ancillary equipment for sealed water systems. |
| BS 7593 | Treatment of water in domestic hot water central heating systems. |

**In IE the following Codes of Practice apply:**

| Standard | Scope |
|---|---|
| I.S. 813 | Domestic Gas Installations. |
| The following standards give valuable additional information; | |
| BS 5546 | Installation of hot water supplies for domestic purposes. |
| BS EN 12828 | Heating systems in buildings. |
| BS EN 14336 | Installation & commissioning of water based heating systems. |
| BS 7074 | Expansion vessels and ancillary equipment for sealed water systems. |
| BS 7593 | Treatment of water in domestic hot water central heating systems. |


© Baxi Heating UK Ltd 2016

## General

The following advice should be adhered to, from when first handling the boiler to the final stages of installation, and also during maintenance.

Most injuries as a result of inappropriate handling and lifting are to the back, but all other parts of the body are vulnerable, particularly shoulders, arms and hands. Health & Safety is the responsibility of EVERYONE.

There is no 'safe' limit for one man - each person has different capabilities. The boiler should be handled and lifted by TWO PEOPLE.

Do not handle or lift unless you feel physically able.

Wear appropriate Personal Protection Equipment e.g. protective gloves, safety footwear etc.

## Preparation

Co-ordinate movements - know where, and when, you are both going.

Minimise the number of times needed to move the boiler - plan ahead.

Always ensure when handling or lifting the route is clear and unobstructed. If possible avoid steps, wet or slippery surfaces, unlit areas etc. and take special care on ladders/into lofts.

## Technique

When handling or lifting always use safe techniques - keep your back straight, bend your knees. Don't twist - move your feet, avoid bending forwards and sideways and keep the load as close to your body as possible.

Where possible transport the boiler using a sack truck or other suitable trolley.

Always grip the boiler firmly, and before lifting feel where the weight is concentrated to establish the centre of gravity, repositioning yourself as necessary. See the 'Installation' section of these instructions for recommended lift points.

## Remember

The circumstances of each installation are different. Always asses the risks associated with handling and lifting according to the individual conditions.

If at any time when installing the boiler you feel that you may have injured yourself STOP !!
DO NOT 'work through' the pain - you may cause further injury.

**IF IN ANY DOUBT DO NOT HANDLE OR LIFT THE BOILER - OBTAIN ADVICE OR ASSISTANCE BEFORE PROCEEDING !!**

© Baxi Heating UK Ltd 2016

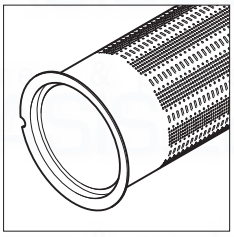

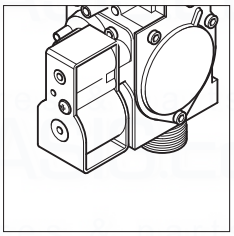

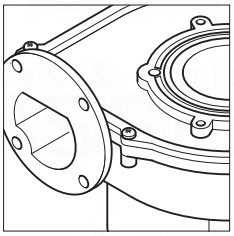

# CONTENTS


| Section | | Page |
|---|---|---|
| 1.0 | Introduction | 7 |
| 2.0 | General Layout | 8 |
| 3.0 | Appliance Operation | 9 |
| 4.0 | Technical Data | 10 |
| 5.0 | Dimensions and Fixings | 12 |
| 6.0 | System Details | 13 |
| 7.0 | Site Requirements | 15 |
| 8.0 | Flue Options | 21 |
| 9.0 | Installation | 23 |
| 10.0 | Commissioning | 28 |
| 11.0 | Completion | 31 |
| 12.0 | Servicing | 32 |
| 13.0 | Changing Components | 34 |
| 14.0 | Setting the Gas Valve | 42 |
| 15.0 | Electrical | 43 |
| 16.0 | Short Parts List | 44 |
| 17.0 | Fault Finding | 45 |
| | Benchmark Checklist | 50 |


 © Baxi Heating UK Ltd 2016

# 1.0 Introduction

## 1.1 Description

1. The Potterton Promax System ErP is a fully automatic gas fired wall mounted condensing system boiler. It is room sealed and fan assisted.

2. The boiler is set to give a maximum output of :-

| | |
|---|---|
| 12 models - | 12 kW |
| | 13 kW Pnc (Condensing) |
| 15 models - | 15 kW |
| | 16.2 kW Pnc (Condensing) |
| 18 models - | 18 kW |
| | 19.4 kW Pnc (Condensing) |
| 24 models - | 24 kW |
| | 25.9 kW Pnc (Condensing) |
| 32 models - | 32 kW |
| | 34.4 kW Pnc (Condensing) |

3. It is designed for use on Natural Gas (G20).

4. The boiler incorporates a circulating pump and expansion vessel. It is suitable for use only on fully pumped sealed systems.

5. The boiler data badge gives details of the model, serial number and Gas Council number and is situated on the inner door panel. It is visible when the case front panel is removed (Fig. 1).

6. The boiler model name and serial number are also shown on the information label on the rear of the lower door panel. This is for user reference.

7. The boiler is intended to be installed in residential / domestic environments on a governed meter supply only.

8. The boiler must be installed with one of the purpose designed flues such as the standard horizontal telescopic flue kit, part no. 720598701.

9. **All systems must be thoroughly flushed and treated with inhibitor (see section 6.2).**

**Important:** If the boiler is installed at a high point in the system it is strongly recommended that Automatic Air Vent Kit 720004701 is fitted.

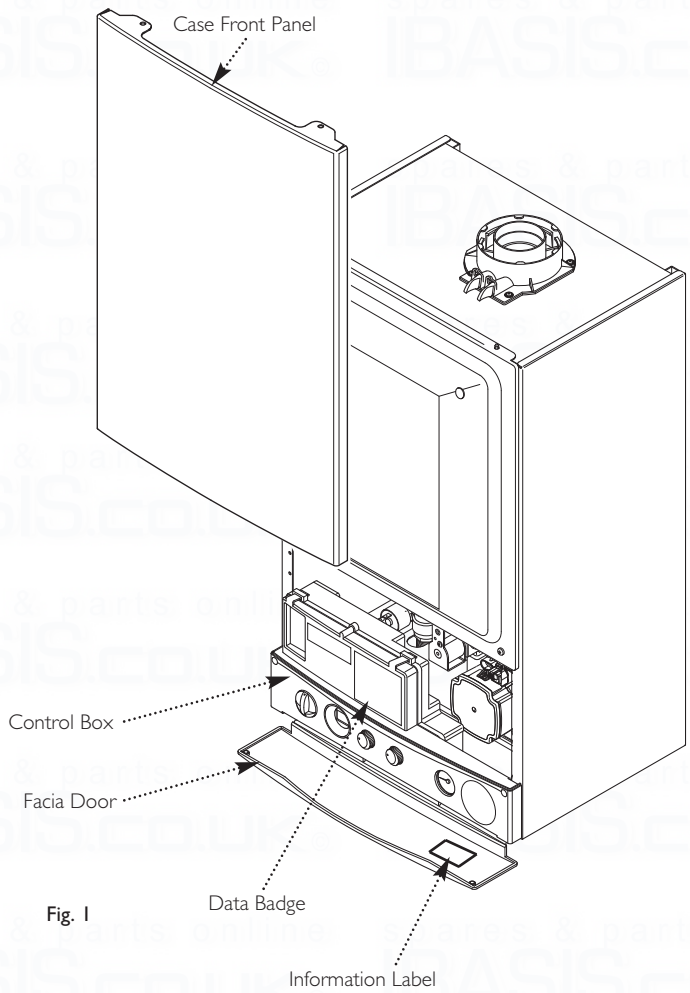


Fig. 1

## 1.2 Contents of Pack

The pack contains:-

- Boiler
- Wall Plate (including taps)
- Set of Pipe Connections
- Template
- Literature Pack

© Baxi Heating UK Ltd 2016

# 2.0 General Layout

## 2.1 Layout

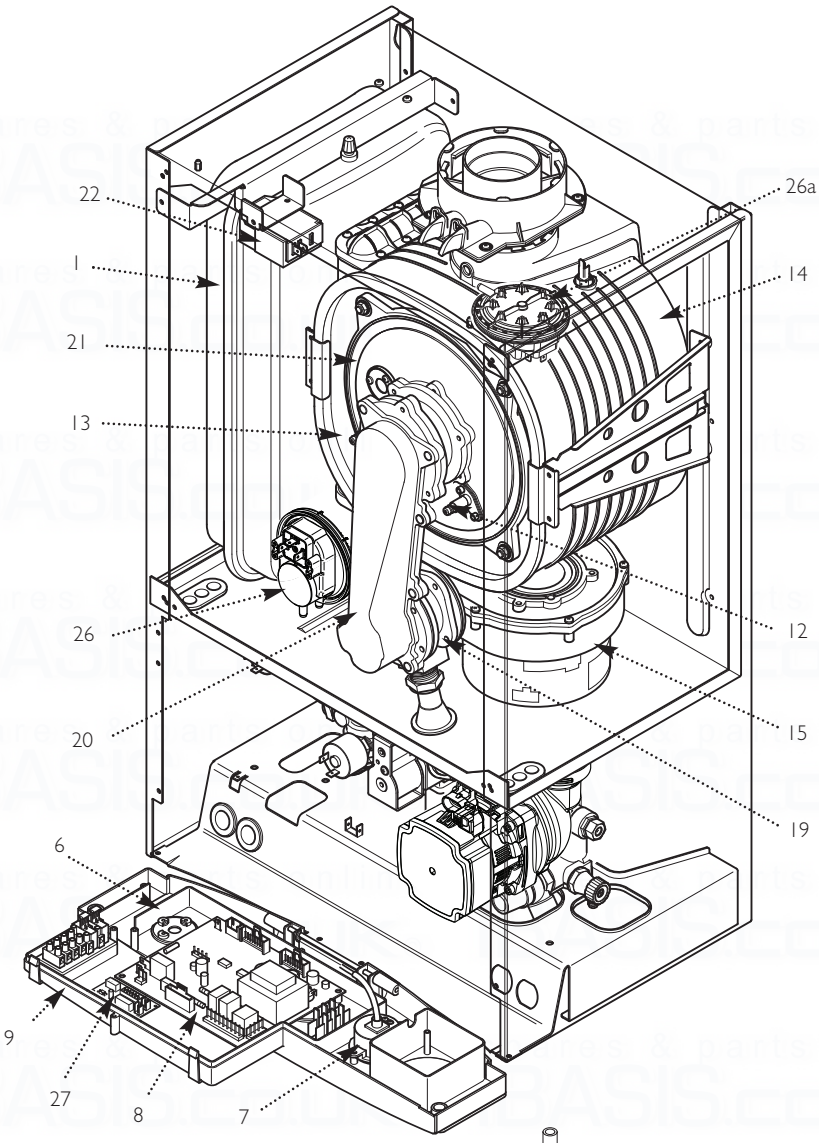


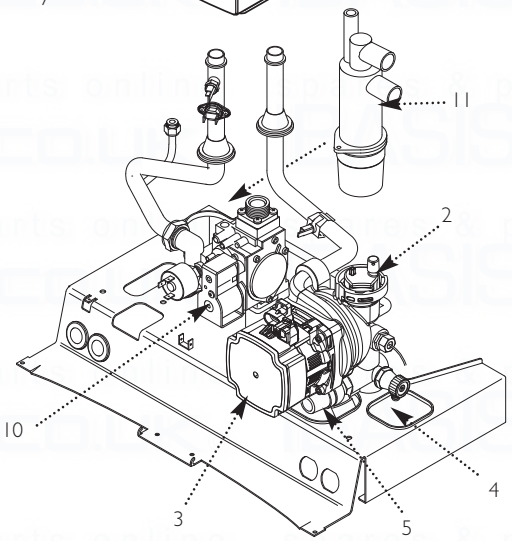


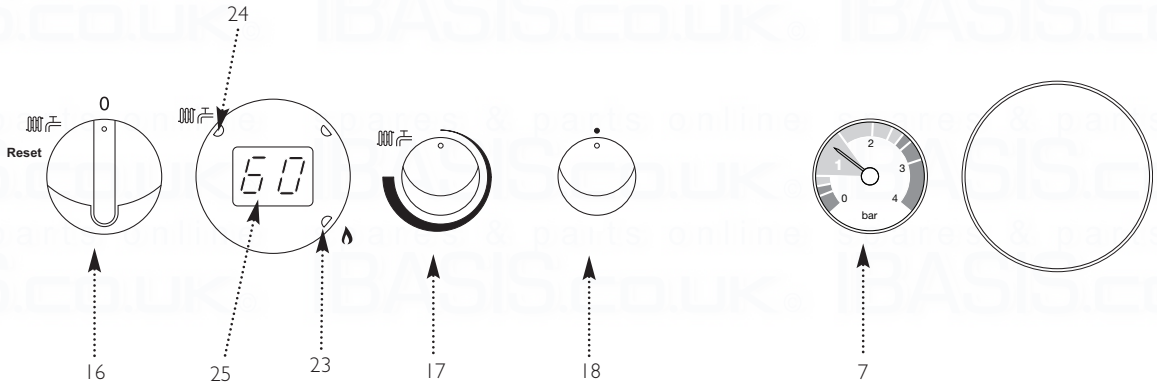


1. Expansion Vessel
2. Automatic Air Vent
3. Circulation Pump

(NOTE: The boiler can be fitted with one of two alternative pumps, Grundfos or Wilo. All boiler illustrations show Grundfos. Section 13.14 details both types).

4. Drain Off Point
5. Pressure Relief Valve
6. Selector Switch
7. Central Heating System Pressure Gauge
8. PCB
9. Control Box
10. Gas Valve
11. Condensate Trap
12. Flame Sensing Electrode
13. Spark Electrode
14. Primary Heat Exchanger
15. Fan Assembly
16. On/Off/Reset Selector Switch
17. Central Heating Temperature Control
18. Calibration Control
19. Venturi
20. Air/Gas Collector
21. Combustion Box Cover & Burner
22. Igniter
23. Burner On Light
24. Central Heating Mode Light
25. Display
26. Air Pressure Switch - 12/15/18/24

26a. Air Pressure Switch - 32

27. Pump PCB


© Baxi Heating UK Ltd 2016

Boiler Primary Circuit

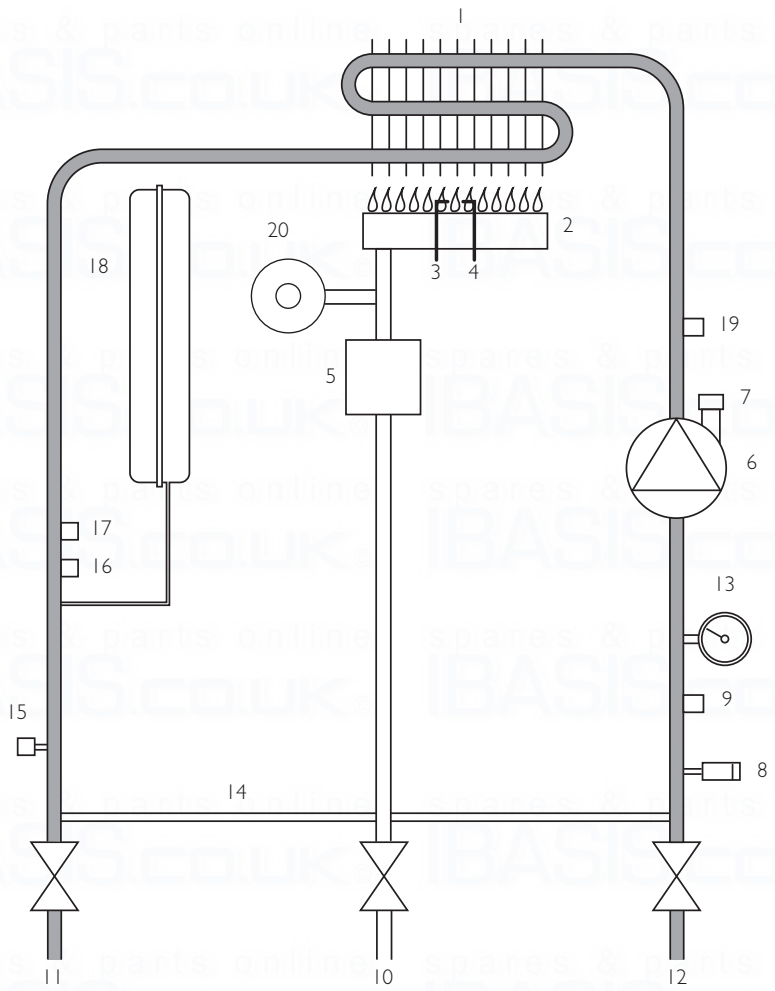


Fig. 2

## Key

1 Heat Exchanger
2 Burner
3 Ignition Electrode
4 Flame Sensing Electrode
5 Gas Valve
6 Pump
7 Automatic Air Vent
8 Pressure Relief Valve
9 Boiler Drain Point
10 Gas Inlet
11 Boiler Flow
12 Boiler Return
13 Pressure Gauge
14 Automatic By-Pass
15 Water Pressure Sensor
16 Safety Thermostat
17 Temperature Sensor
18 Expansion Vessel
19 Return Temperature Sensor
20 Fan

# 3.0 Appliance Operation

## 3.1 Operating Mode (Fig. 2)

1. With a demand for heating or hot water, the pump circulates water through the primary circuit. If the pressure is at least 0.5 bar and the ignition sequence will start.

2. When the flow temperature exceeds the setting temperature, a 3 minute delay occurs before the burner relights automatically (anti-cycling). The pump continues to run during this period.

3. When the demand is satisfied the burner is extinguished and the pump continues to run for a period of 3 minutes (Pump Overrun).

**IMPORTANT: When the selector switch is in the '0' (Off) position the electrical supply to the boiler is isolated. The boiler will not operate.**

## 3.2 Frost Protection Mode

1. The frost protection mode is integral to the appliance and functions when the selector switch (see Section 2.1) is in the ON position ( ). If the system temperature falls below 5° C then the boiler will fire on its minimum setting until a flow temperature of 30° C is reached. Further protection can be incorporated by using a system frost thermostat.

## 3.3 Pump Protection

1. With the selector switch (see Section 2.1) in the ON position ( ) the pump will automatically operate for 1 minute in every 24 hours to prevent sticking.

© Baxi Heating UK Ltd 2016

## 4.1 Promax 12,15,18, 24, & 32 System ErP

| Appliance Type | $C_{13}$ | $C_{33}$ | $C_{53}$ |
|---|---|---|---|
| Appliance Category | CAT I $_{2H}$ | | |

**Heat Input Qn Hs (Gross)**

| | | Max | Min |
|---|---|---|---|
| 12 model | kW | 13.8 | 4.4 |
| 15 model | kW | 17.1 | 4.0 |
| 18 model | kW | 20.5 | 4.5 |
| 24 model | kW | 27.4 | 7.8 |
| 32 model | kW | 36.4 | 10.8 |

**Heat Output Pn (Non-Condensing)**

| | | Max | Min |
|---|---|---|---|
| 12 model | kW | 12.4 | 3.9 |
| 15 model | kW | 15.4 | 3.9 |
| 18 model | kW | 18.5 | 4.2 |
| 24 model | kW | 24.7 | 6.8 |
| 32 model | kW | 32.8 | 9.4 |

**Heat Output Pnc (Condensing)**

| | | Max | Min |
|---|---|---|---|
| 12 model | kW | 13.0 | 4.2 |
| 15 model | kW | 16.2 | 4.2 |
| 18 model | kW | 19.4 | 4.5 |
| 24 model | kW | 25.9 | 7.4 |
| 32 model | kW | 34.4 | 10.2 |

**Max Gas Rate** (Natural Gas - G20) (After 10 mins)

| | | |
|---|---|---|
| 12 model | $m^3/h$ | 1.31 |
| 15 model | $m^3/h$ | 1.69 |
| 18 model | $m^3/h$ | 1.95 |
| 24 model | $m^3/h$ | 2.61 |
| 32 model | $m^3/h$ | 3.48 |

**Electrical Supply** 230V~ 50$H_Z$
(Appliance must be connected to an earthed supply)

**Power Consumption** Watts

| | |
|---|---|
| 12 model | 110W |
| 15 model | 95W |
| 18 model | 105W |
| 24 model | 115W |
| 32 model | 125W |

**Electrical Protection** IPX5D

**External Fuse Rating** 3A

**Internal Fuse Rating** F2L

**Condensate Drain**
To accept 21.5mm (3/4 in) plastic waste pipe

**Flue Terminal Dimensions**

| | |
|---|---|
| Diameter | 100mm |
| Projection | 125mm |

**Connections** copper tails

| | | |
|---|---|---|
| Gas Supply | - | 22mm |
| Central Heating Flow | - | 22mm |
| Central Heating Return | - | 22mm |
| Pressure Relief Discharge | - | 15mm |

**Outercase Dimensions**

| | |
|---|---|
| Casing Height | - 780mm |
| Overall Height Inc Flue Elbow | - 940mm |
| Casing Width | - 450mm |
| Casing Depth | - 345mm |

**Clearances**

| | |
|---|---|
| Above Casing | 175 mm Min |
| Below Casing | 150 mm Min* |
| Front | 450 mm Min (For Servicing) |
| Front | 5 mm Min (In Operation) |
| L.H. Side | 5 mm Min |
| R.H. Side | 5 mm Min (In Operation) |

*This is MINIMUM recommended dimension. Greater clearance will aid installation and maintenance.

**$NO_x$ Class** 5

**Central Heating Primary Circuit Pressures**

| | bar |
|---|---|
| Safety Discharge | 3 |
| Max Operating | 2.5 |
| Min Operating | 0.5 |
| Recommended Operating Range | 1-2 |

**Pump**
Available Head See graph below

**Expansion Vessel** - (Integral with appliance)

| | bar |
|---|---|
| Min Pre-charge Pressure | 0.5 |

| | litre |
|---|---|
| Max Capacity of CH System | 125 |
| Primary Water Content of Boiler (unpressurised) | 2.5 |

**Temperatures**
Flow Temp (adjustable)
25°C to 80°C max (± 5°C)

**Inlet Pressure** (Natural Gas - G20)
mbar 20

**Injector** (Natural Gas - G20)

| | |
|---|---|
| 12 model | 4mm |
| 15 model | 4.5mm |
| 18 model | 5.7mm |
| 24 model | 7.5mm |
| 32 model | 12mm |

**Weights** (kg)

| | 12, 15 &18 | 24 |
|---|---|---|
| Packaged Boiler Carton | 41.5 | 43.0 |
| Installation Lift Weight | 36.4 | 37.9 |

| | 32 |
|---|---|
| Packaged Boiler Carton | 43.5 |
| Installation Lift Weight | 48.4 |

**NOTE:** All data in this section are nominal values and subject to normal production tolerances.

**Product Characteristic Database (SEDBUK)**

**SAP 2009 Annual Efficiency**
**All models - 89.0 %**

This value is used in the UK Government's Standard Assessment Procedure (SAP) for energy rating of dwellings. The test data from which it has been calculated has been certified by 0085.

Pump - Available Head

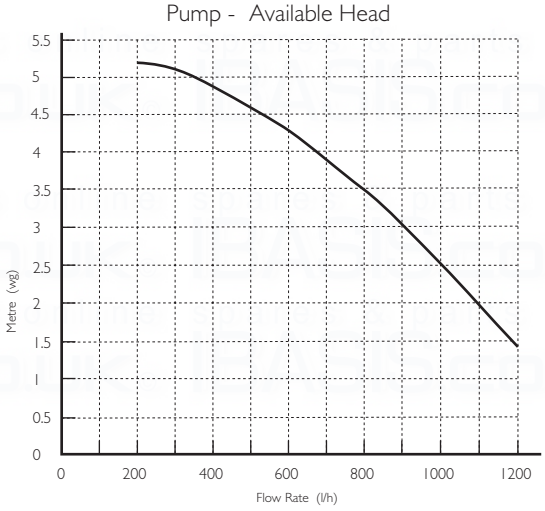


 © Baxi Heating UK Ltd 2016

## 4.2 Technical Parameters

Technical parameters for boiler space heaters

| **Potterton Promax System ErP** | | | **12** | **15** | **18** | **24** | **32** |
|---|---|---|---|---|---|---|---|
| Condensing boiler | | | Yes | Yes | Yes | Yes | Yes |
| Low-temperature boiler(1) | | | No | No | No | No | No |
| B1 boiler | | | No | No | No | No | No |
| Cogeneration space heater | | | No | No | No | No | No |
| Combination heater | | | No | No | No | No | No |
| **Rated heat output** | *Prated* | kW | 12 | 15 | 19 | 25 | 33 |
| Useful heat output at rated heat output and high temperature regime | $P_4$ | kW | 12.4 | 15.4 | 18.5 | 24.7 | 32.8 |
| Useful heat output at 30% of rated heat output and low temperature regime(1) | $P_1$ | kW | 4.0 | 5.0 | 6.0 | 8.0 | 10.6 |
| **Seasonal space heating energy efficiency** | $\eta_s$ | % | 91 | 92 | 92 | 92 | 92 |
| Useful efficiency at rated heat output and high temperature regime(2) | $\eta_4$ | % | 90.0 | 90.0 | 90.0 | 90.0 | 90.0 |
| Useful efficiency at 30% of rated heat output and low temperature regime(1) | $\eta_1$ | % | 96.7 | 96.8 | 96.8 | 96.8 | 96.7 |
| **Auxiliary electricity consumption** | | | | | | | |
| Full load | *elmax* | kW | 0.050 | 0.037 | 0.065 | 0.042 | 0.043 |
| Part load | *elmin* | kW | 0.015 | 0.014 | 0.014 | 0.014 | 0.015 |
| Standby mode | $P_{SB}$ | kW | 0.003 | 0.003 | 0.003 | 0.003 | 0.003 |
| **Other items** | | | | | | | |
| Standby heat loss | $P_{stby}$ | kW | 0.040 | 0.040 | 0.040 | 0.040 | 0.040 |
| Ignition burner power consumption | $P_{ign}$ | kW | - | - | - | - | - |
| Annual energy consumption | $Q_{HE}$ | kWh<br>GJ | 10901<br>39 | 13391<br>48 | 16087<br>58 | 21478<br>77 | 28522<br>103 |
| Sound power level, indoors | $L_{WA}$ | dB | 55 | 52 | 53 | 58 | 54 |
| Emissions of nitrogen oxides | $NO_X$ | mg/kWh | 15 | 25 | 29 | 20 | 24 |

(1) Low temperature means for condensing boilers 30°C, for low temperature boilers 37°C and for other heaters 50°C return temperature (at heater inlet).
(2) High temperature regime means 60°C return temperature at heater inlet and 80°C feed temperature at heater outlet.

**See**
The back cover for contact details.

© Baxi Heating UK Ltd 2016

NOTE: There must be no part of the air duct (white tube) visible outside the property after installation. The flue seal should fit neatly and effect a good seal. For full detail refer to Section 9.6 "Fitting the Flue".

| Dimensions | |
|---|---|
| A | 780mm |
| B | 345mm |
| C | 450mm |
| D | 116mm Ø Min. |
| E | 160mm (207mm for 80/125mm flue systems) |
| F | 145mm |
| G | 131mm |
| H | 180mm |

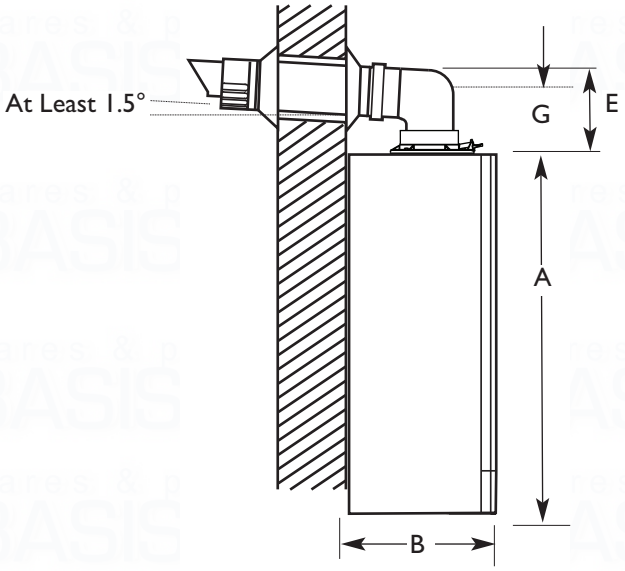


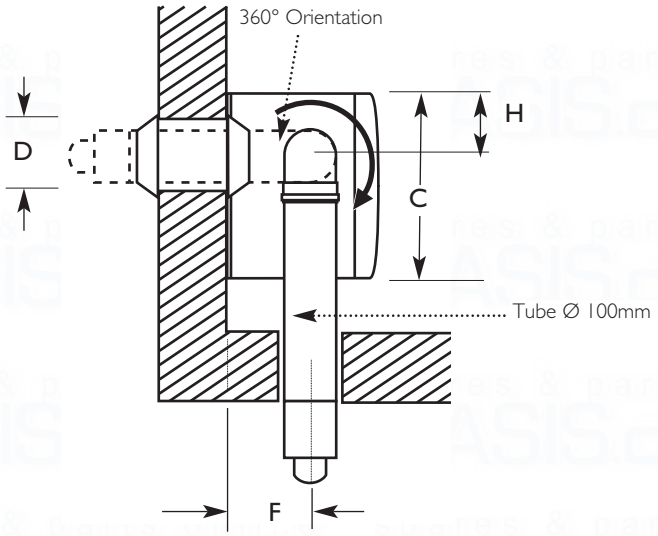


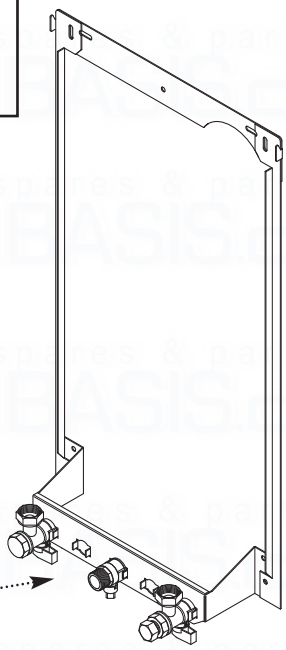

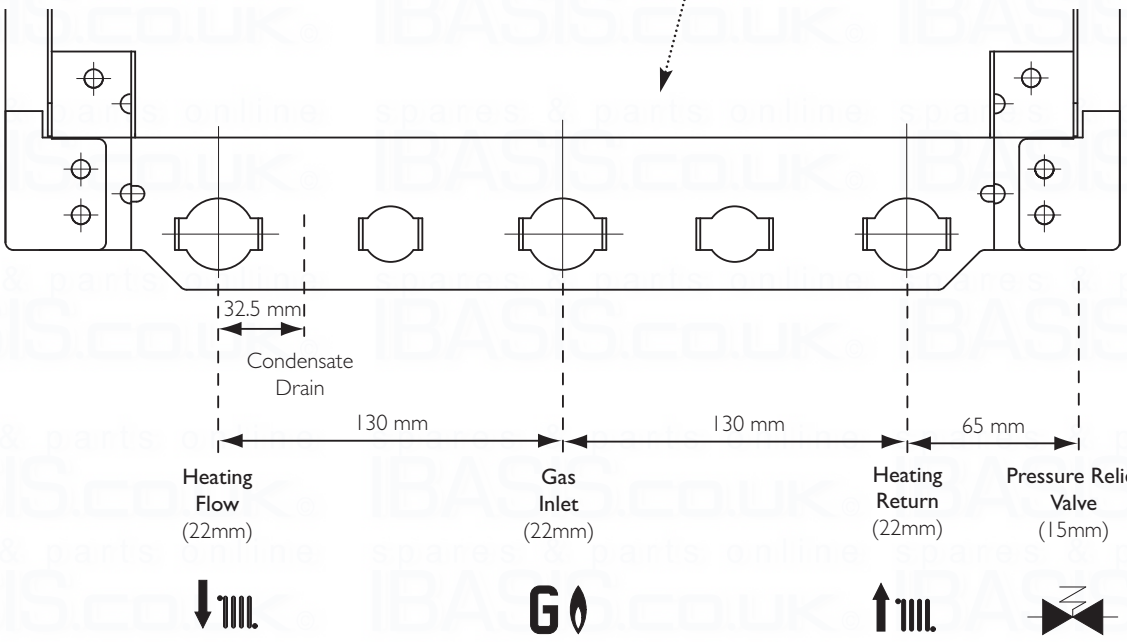


 © Baxi Heating UK Ltd 2016

# 6.0 System Details

## 6.1 Central Heating Circuit

1. The appliance is suitable for fully pumped SEALED SYSTEMS ONLY.

Treatment of Water Circulating Systems

• All recirculatory water systems will be subject to corrosion unless an appropriate water treatment is applied. This means that the efficiency of the system will deteriorate as corrosion sludge accumulates within the system, risking damage to pump and valves, boiler noise and circulation problems.

• When fitting new systems flux will be evident within the system, which can lead to damage of system components.

• All systems must be thoroughly drained and flushed out using, for example, Sentinel X300 or X400 or Fernox F3. They should be used following the flushing agent manufacturer's instructions.

• System additives - corrosion inhibitors and flushing agents/descalers should comply to BS7593 requirements, e.g. Sentinel X100 and Fernox MB-1 which should be used following the inhibitor manufacturer's instructions.

• Full instructions are supplied with the products, for further information contact Sentinel (0800 389 4670) or Fernox (0870 870 0362)

Failure to flush and add inhibitor to the system will invalidate the appliance warranty.

• It is important to check the inhibitor concentration after installation, system modification and at every service in accordance with the manufacturer's instructions. (Test kits are available from inhibitor stockists.)

• For information or advice regarding any of the above contact Technical Enquiries.

## 6.2 Bypass

1. The boiler is fitted with an automatic integral bypass.

## 6.3 System Control

1. For optimum operating conditions, the heating system into which the boiler is installed should include a control system.

2. Such a system will comprise of a timer control and separate room or cylinder thermostats as appropriate.

3. The boiler should be controlled so that it operates on demand only.

4. Operation of the system under control of the boiler thermostat & TRV's only does not produce the best results.

© Baxi Heating UK Ltd 2016

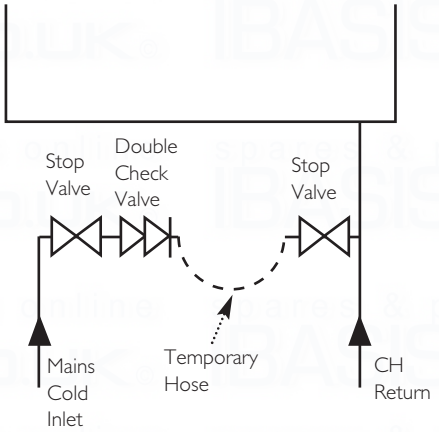


Fig. 3

## 6.4 System Filling and Pressurising

1. A filling point connection on the central heating return pipework must be provided to facilitate initial filling and pressurising and also any subsequent water loss replacement/refilling.

2. The filling method adopted must be in accordance with all relevant water supply regulations and use approved equipment.

3. Your attention is drawn to:
for GB: Guidance G24.2 and recommendation R24.2 of the Water Regulations Guide.
for IE: the current edition of I.S. 813 "Domestic Gas Installations".

4. The sealed primary circuits may be filled or replenished by means of a temporary connection between the circuit and a supply pipe, provided a 'Listed' double check valve or some other no less effective backflow prevention device is permanently connected at the inlet to the circuit and the temporary connection is removed after use.

## 6.5 Expansion Vessel

1. The appliance expansion vessel is pre-charged to 0.5 bar. Therefore, the minimum cold fill pressure is 0.5 bar. The vessel is suitable for correct operation for system capacities up to 125 litres. For greater system capacities an additional expansion vessel must be fitted. For GB refer to BS 7074 Pt 1. For IE, the current edition of I.S. 813 "Domestic Gas Installations".

## 6.6 Pressure Relief Valve (Fig. 4)

1. The pressure relief valve is set at 3 bar, therefore all pipework, fittings, etc. should be suitable for pressures in excess of 3 bar and temperature in excess of 100°C.

2. The pressure relief discharge pipe should be not less than 15mm dia, run continuously downward, and discharge outside the building, preferably over a drain. It should be routed in such a manner that no hazard occurs to occupants or causes damage to wiring or electrical components. The end of the pipe should terminate facing down and towards the wall.

3. The discharge must not be above a window, entrance or other public access. Consideration must be given to the possibility that boiling water/steam could discharge from the pipe.

4. A remote relief valve kit is available to enable the boiler to be installed in cellars or similar locations below outside ground level (kit no. 5121379).

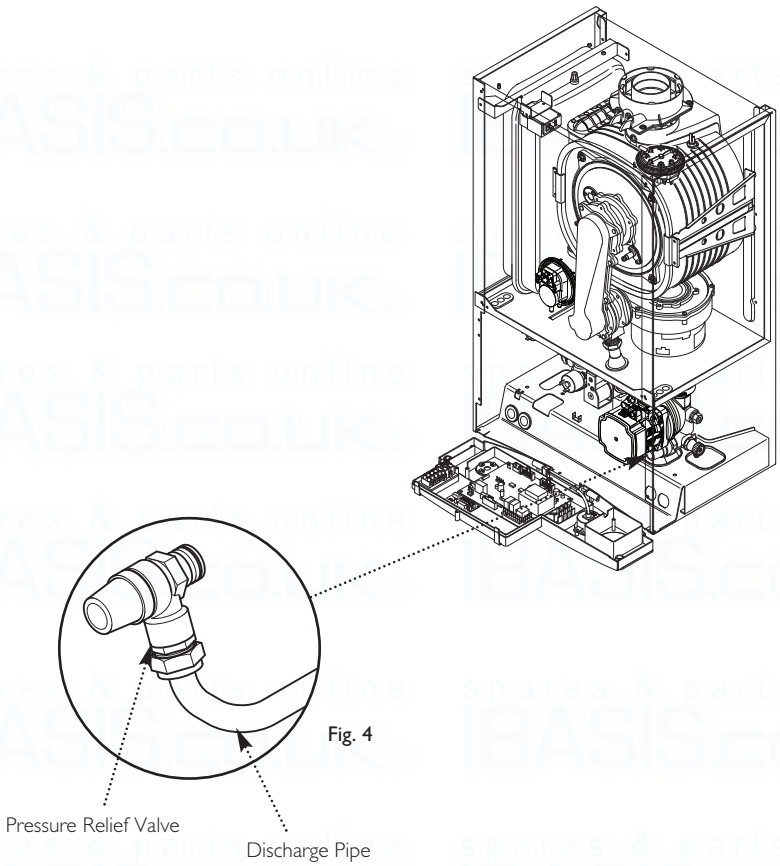


Fig. 4

 © Baxi Heating UK Ltd 2016

# 7.0 Site Requirements

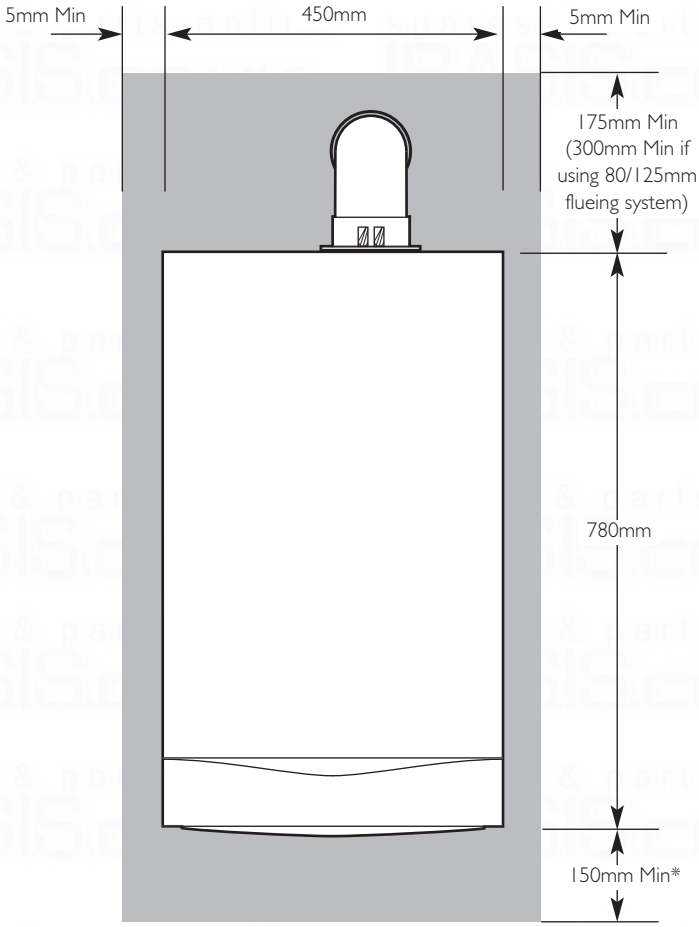


Fig. 5

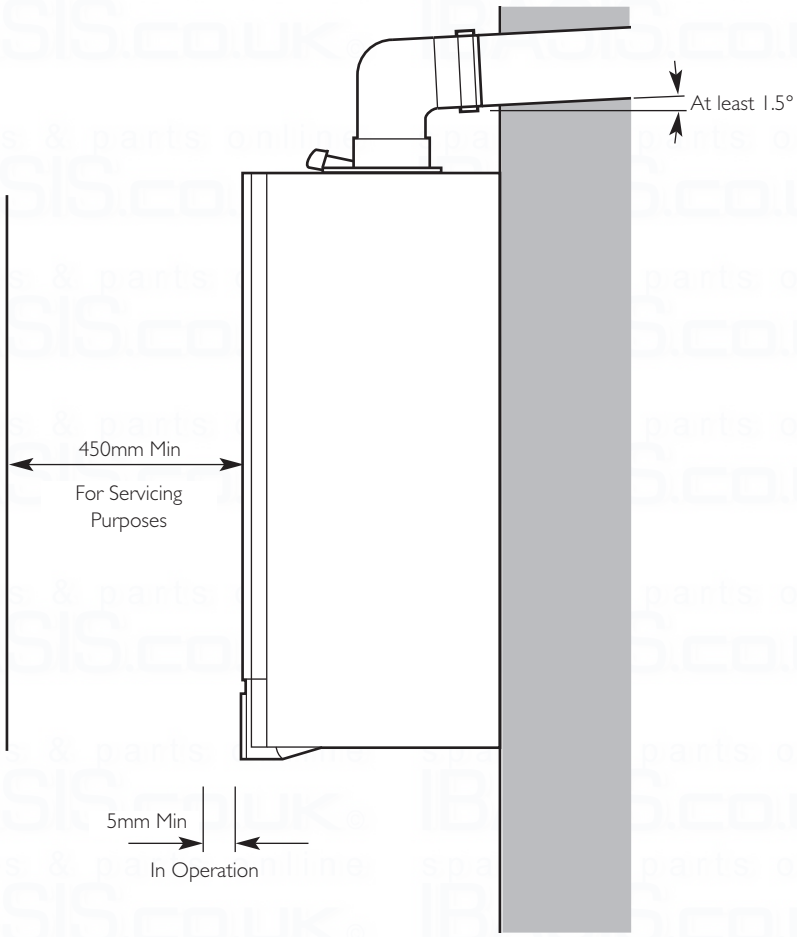


Fig. 6

## 7.1 Location

1. The boiler may be fitted to any suitable wall with the flue passing through an outside wall or roof and discharging to atmosphere in a position permitting satisfactory removal of combustion products and providing an adequate air supply. The boiler should be fitted within the building unless otherwise protected by a suitable enclosure i.e. garage or outhouse. (The boiler may be fitted inside a cupboard-see Section 7.3).

2. If the boiler is sited in an unheated enclosure then it is recommended to leave the ON/OFF Selector Switch in the On position.

3. If the boiler is fitted in a room containing a bath or shower reference must be made to the relevant requirements.
In GB this is the current I.E.E. Wiring Regulations and Building Regulations.
In IE reference should be made to the current edition of I.S. 813 "Domestic Gas Installations" and the current ETCI rules.

4. If the boiler is to be fitted into a building of timber frame construction then reference must be made to the current edition of Institute of Gas Engineers Publication IGE/UP/7 (Gas Installations in Timber Framed Housing).

*This is the MINIMUM recommended dimension. Greater clearance will aid installation and maintenance.

## 7.2 Clearances (Figs. 5 & 6)

1. A flat vertical area is required for the installation of the boiler.

2. These dimensions include the necessary clearances around the boiler for case removal, spanner access and air movement. Additional clearances may be required for the passage of pipes around local obstructions such as joists running parallel to the front face of the boiler.

© Baxi Heating UK Ltd 2016

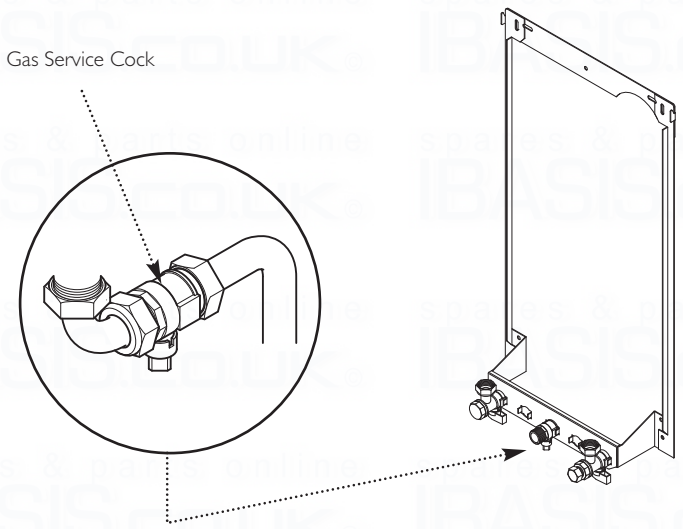


Fig. 7

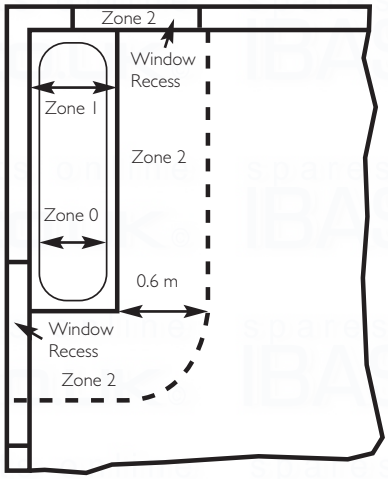


Fig. A In GB Only

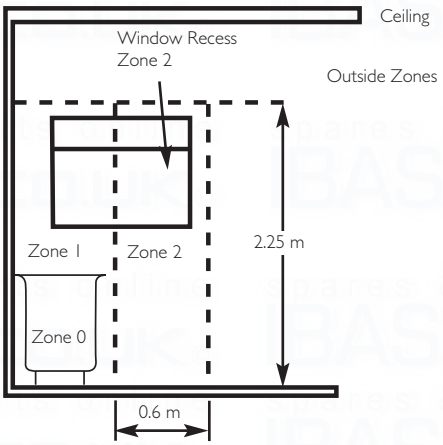


Fig. B In GB Only

## 7.0 Site Requirements

### 7.3 Ventilation of Compartments

1. Where the appliance is installed in a cupboard or compartment, no air vents are required.

2. BS 5440: Part 2 refers to room sealed appliances installed in compartments. The appliance will run sufficiently cool without ventilation.

### 7.4 Gas Supply

1. The gas installation should be in accordance with the relevant standards. In GB this is BS 6891. In IE this is the current edition of I.S. 813 "Domestic Gas Installations".

2. The connection to the appliance is a 22mm copper tail located at the rear of the gas service cock (Fig. 7).

3. Ensure that the pipework from the meter to the appliance is of adequate size, and the demands of any other gas appliances in the property are taken into consideration. Do not use pipes of a smaller diameter than the boiler gas connection (22mm).

### 7.5 Electrical Supply

1. External wiring must be correctly earthed, polarised and in accordance with relevant regulations/rules. In GB this is the current I.E.E. Wiring Regulations. In IE reference should be made to the current edition of ETCI rules.

2. The mains supply is 230V ~ 50$H_z$ fused at 3A.

**NOTE: The method of connection to the electricity supply must facilitate complete electrical isolation of the appliance.**

**Connection may be via a fused double-pole isolator with a contact separation of at least 3mm in all poles and servicing the boiler and system controls only.**

3. When the system includes an indirect domestic hot water cylinder it is recommended that a cylinder thermostat is used in conjunction with a 3 port 2 position valve or 2 port zone valve.

### 7.6 Bath & Shower Rooms

1. If the boiler is fitted in a room containing a bath or shower and **NOT FITTED** with any optional integral timer or thermostat, it can be fitted in zone 2, (Figs. A & B shows zone dimensions for a bathtub. For other examples refer to the Current I.E.E. Wiring Regulations) reference must be made to the relevant requirements.
In GB this is the current I.E.E. Wiring Regulations and Building Regulations.
In IE reference should be made to the current edition of I.S. 813 "Domestic Gas Installations" and the current ETCI rules.

 © Baxi Heating UK Ltd 2016

Examples are shown of the following methods of termination:-
i) to an internal soil & vent pipe
ii) via an internal discharge branch (e.g. sink waste) downstream of the trap
iii) to a drain or gully
iv) to a purpose made soakaway
v) pumped into an internal discharge branch (e.g. sink waste) downstream of the trap
vi) pumped into an external soil & vent pipe
vii) to a drain or gully with extended external run & trace heating

**It is strongly recommended to discharge internally into the household drainage system. If connecting to a rain water drain, that drain MUST discharge into a foul drain.**

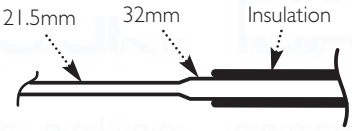


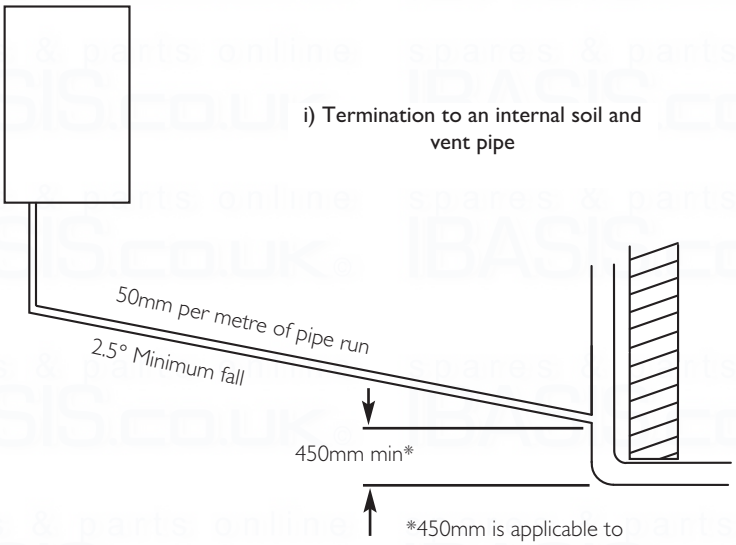


**i) Termination to an internal soil and vent pipe**

*450mm is applicable to properties up to 3 storeys. For multi-storey building installations consult BS 6798.

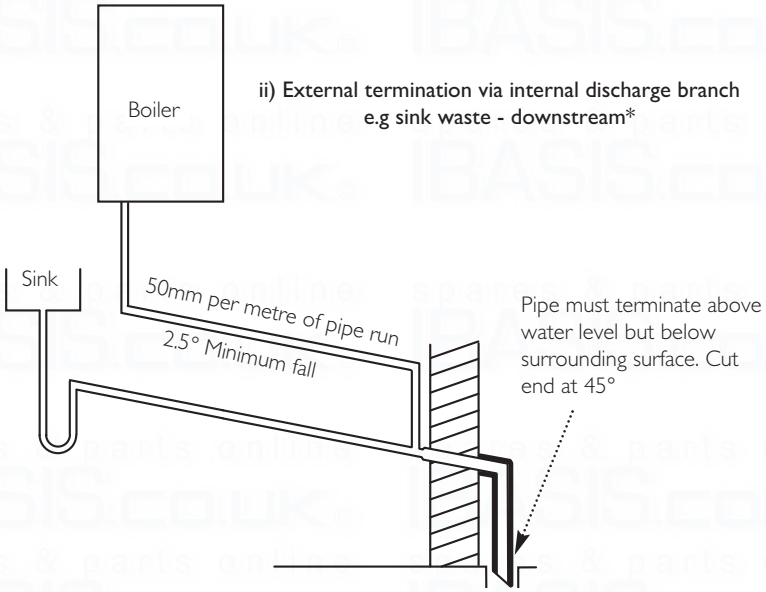


**ii) External termination via internal discharge branch e.g sink waste - downstream***

*It is NOT RECOMMENDED to connect upstream of the sink or other waste water receptacle !

## 7.0 Site Requirements

### 7.7 Condensate Drain

FAILURE TO INSTALL THE CONDENSATE DISCHARGE PIPEWORK CORRECTLY WILL AFFECT THE RELIABLE OPERATION OF THE BOILER.

CAREFUL CONSIDERATION MUST BE GIVEN TO THE POSSIBILITY OF THE PIPEWORK BEING SUBJECT TO FREEZING CONDITIONS AND APPROPRIATE MEASURES TAKEN TO PREVENT BLOCKAGE. CORRECT INSTALLATION IN ACCORDANCE WITH THIS SECTION WILL CONSIDERABLY MINIMISE THE LIKELIHOOD OF BLOCKAGE AND SUBSEQUENT BOILER LOCK-OUT.

A CONDENSATE DISCHARGE PUMP AND PIPE 'TRACE HEATING' ARE AVAILABLE AS ACCESSORIES - see paragraphs 7.7.12 to 7.715 for further details.

**The condensate discharge pipe MUST NOT RISE at any point along its length. There MUST be a fall of AT LEAST 2.5° (50mm per metre) along the entire run EXCEPT when employing a suitable condensate pump in basement and cellar or similar applications.**

**The boiler condensate trap incorporates a seal of 75mm, therefore it is unnecessary to install an air break and trap in the discharge pipework.**

1. The condensate outlet will accept 21.5mm (3/4in) plastic overflow pipe. **It is strongly recommended that this discharges internally into the household drainage system**. Where this is not possible, discharge into an outside drain is permissible providing every possible precaution is taken to prevent freezing.

2. Ensure the discharge of condensate complies with any national or local regulations in force. **BS 6798 & Part H1 of the Building Regulations give further detailed guidance.**

3. The discharge pipe should be run in a proprietary drain pipe material e.g. PVC, PVC-U, ABS, PVC-C or PP.

4. Metal pipework is NOT suitable for use in condensate discharge systems.

5. The pipe should be a minimum of 21.5mm diameter and must be supported using suitably spaced clips of the correct design to prevent sagging.

6. **It is advisable that the full length of condensate pipe is run internally and preferably be less than 3 metres.**

7. **Internal runs greater than 3 metres or runs in cold areas should use 32mm waste pipe.**

8. **External runs MUST be a MINIMUM of 32mm and fully insulated with material suitable for external use.**

9. If the boiler is fitted in an unheated location the entire condensate discharge pipe should be treated as an external run and sized and insulated accordingly.

10. In all cases discharge pipe must be installed to aid disposal of the condensate. To reduce the risk of condensate being trapped, as few bends and fittings as possible should be used and any burrs on cut pipe removed.

© Baxi Heating UK Ltd 2016

## 7.7 Condensate Drain (cont.)

11. When discharging condensate into a soil stack or waste pipe the effects of existing plumbing must be considered. If soil pipes or waste pipes are subjected to internal pressure fluctuations when WC's are flushed or sinks emptied then back-pressure may force water out of the boiler trap and cause appliance lockout.

**iii) Termination to a drain or gully**

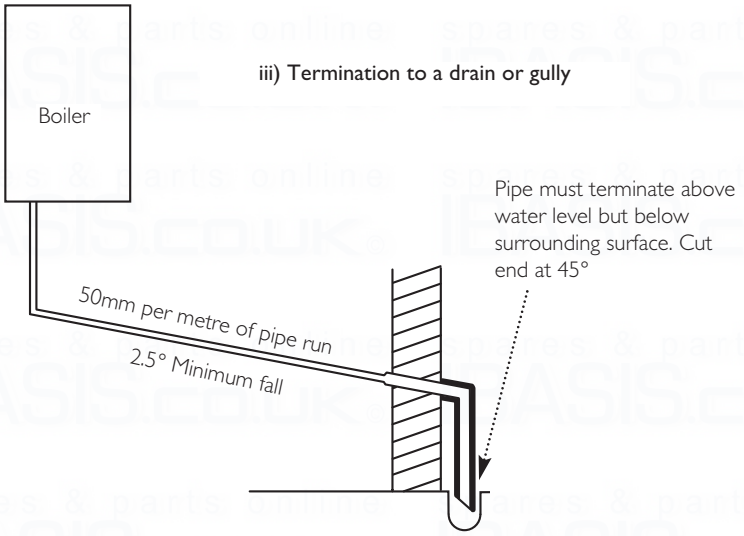


**iv) Termination to a purpose made soakaway**

Further specific requirements for soakaway design are referred to in BS 6798.

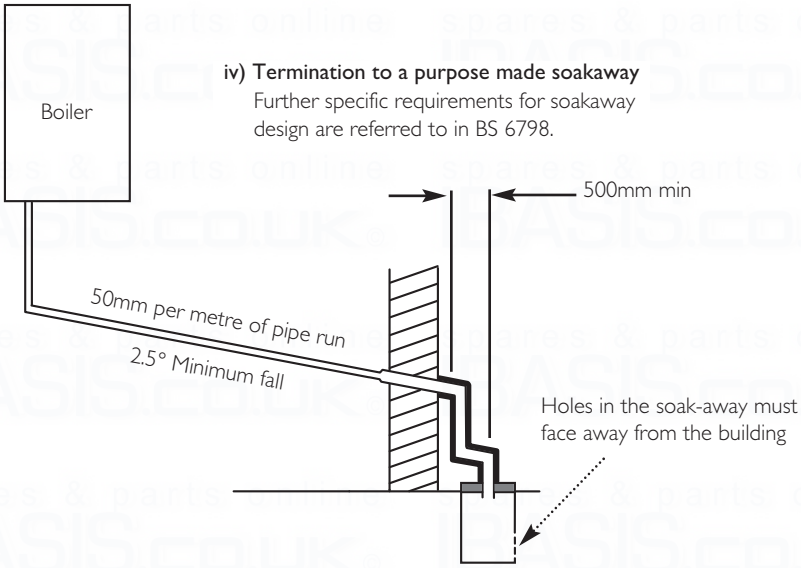


 © Baxi Heating UK Ltd 2016

v) pumped into an internal discharge branch (e.g. sink waste) downstream of the trap

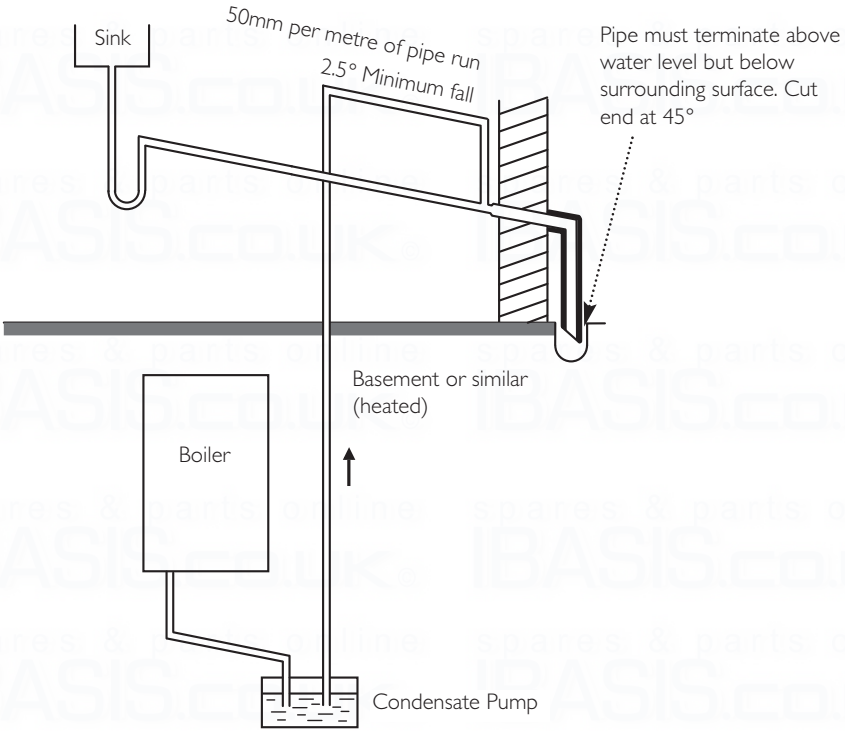


vi) pumped into an external soil & vent pipe

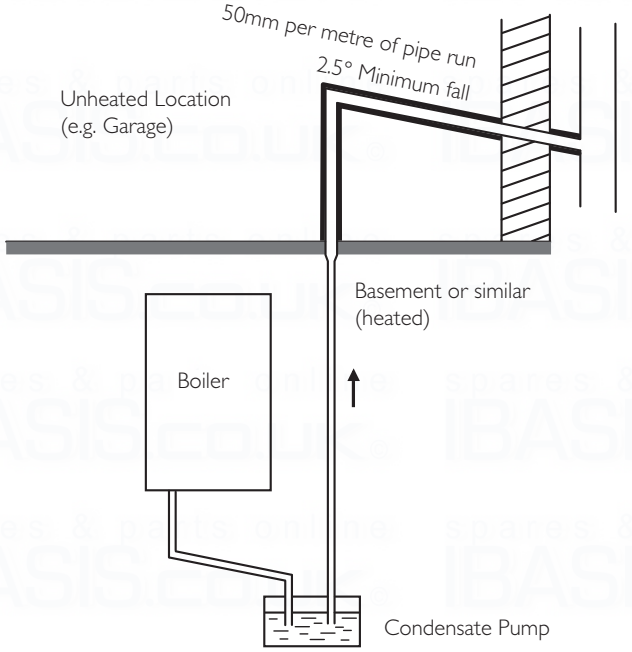


## 7.0 Site Requirement

### 7.7 Condensate Drain (cont.)

12. A boiler discharge pump is available, 'MULTIFIT' part no. 720648301. This pump will dispose of both condensate & high temperature water from the relief valve. It has a maximum head of 5 metres. Follow the instructions supplied with the pump.

13. Condensate Drain Pipe 'Trace Heating' Elements are available in various lengths. 'MULTIFIT' part nos.:-

1 metre 720644401
2 metre 720664101
3 metre 720664201
5 metre 720664401*

*Where the drain is between 3 & 5 metres a 5 metre kit can be used and "doubled back" upon itself.

14. It is possible to fit the element externally on the condensate drain or internally as detailed in the instructions provided.

15. The fitting of a 'Trace Heating' Element is NOT a substitute for correct installation of the condensate drain. ALL requirements in this section must still be adhered to.

vii) to a drain or gully with extended external run & trace heating

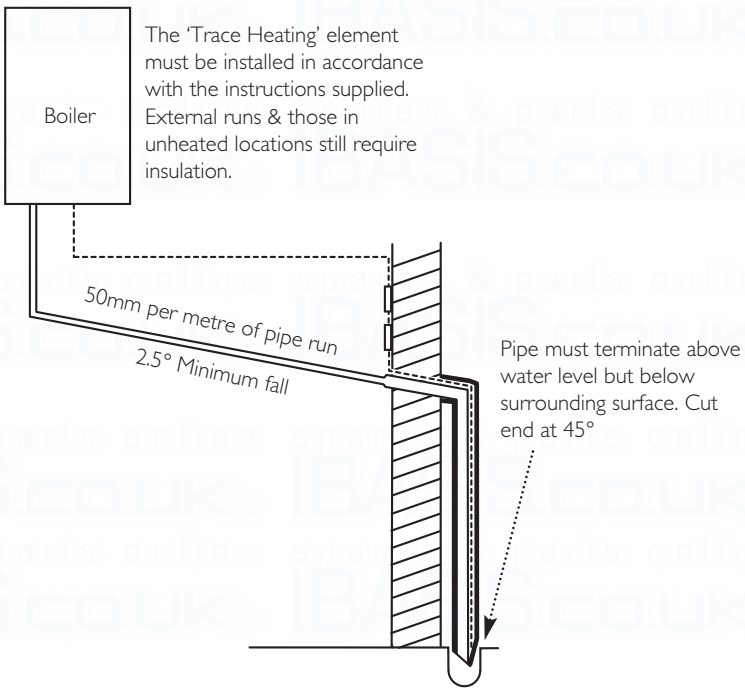


© Baxi Heating UK Ltd 2016

| | Terminal Position with Minimum Distance (Fig. 9) | (mm) |
|---|---|---|
| A[1] | Directly below an opening, air brick, opening windows, etc. | 300 |
| B[1] | Above an opening, air brick, opening window etc. | 300 |
| C[1] | Horizontally to an opening, air brick, opening window etc. | 300 |
| D[2] | Below gutters, soil pipes or drain pipes. | 25 (75) |
| E[2] | Below eaves. | 25 (200) |
| F[2] | Below balconies or car port roof. | 25 (200) |
| G[2] | From a vertical drain pipe or soil pipe. | 25 (150) |
| H[2] | From an internal or external corner. | 25 (300) |
| I | Above ground, roof or balcony level. | 300 |
| J | From a surface or boundary line facing a terminal. | 600 |
| K | From a terminal facing a terminal (Horizontal flue). | 1200 |
| | From a terminal facing a terminal (Vertical flue). | 600 |
| L | From an opening in carport (e.g. door, window) into the dwelling. | 1200 |
| M | Vertically from a terminal on the same wall. | 1500 |
| N | Horizontally from a terminal on the same wall. | 300 |
| R | From adjacent wall to flue (vertical only). | 300 |
| S | From an adjacent opening window (vertical only). | 1000 |
| T | Adjacent to windows or openings on pitched and flat roofs | 600 |
| U | Below windows or openings on pitched roofs | 2000 |

[1] In addition, the terminal should be no nearer than 150 mm to an opening in the building fabric formed for the purpose of accommodating a built-in element such as a window frame.

[2] Only **ONE** 25mm clearance is allowed per installation. If one of the dimensions D, E, F, G or H is 25mm then the remainder **MUST** be as shown in brackets, in accordance with B.S.5440-1.

**NOTE:** The distance from a fanned draught appliance terminal installed parallel to a boundary may not be less than 300mm in accordance with the diagram below

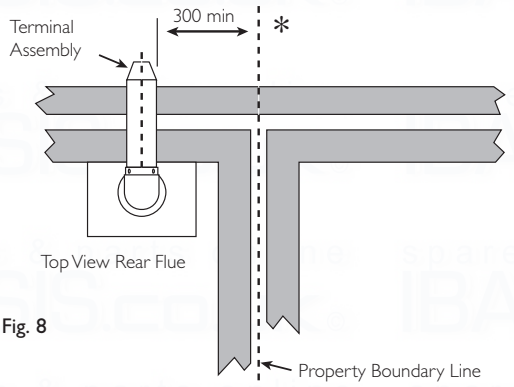


Fig. 8

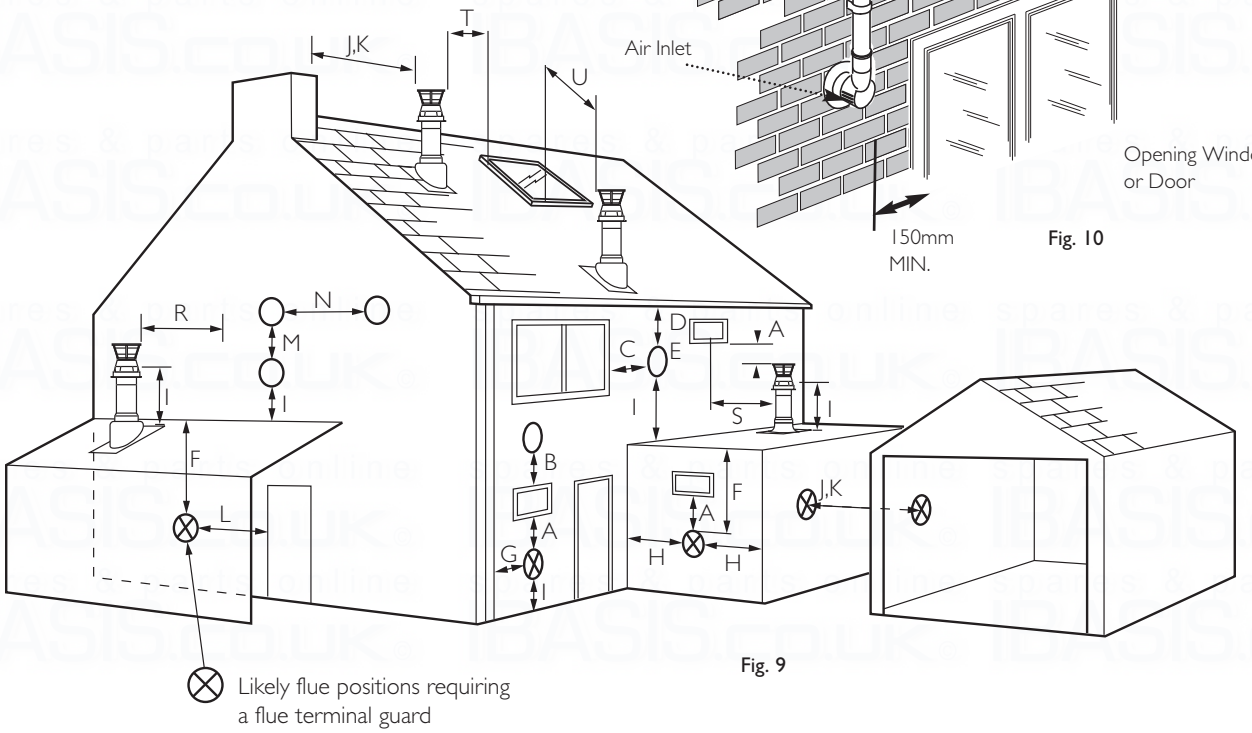


Fig. 9

## 7.0 Site Requirements

### 7.8 Flue

**NOTE:** Due to the nature of the boiler a plume of water vapour will be discharged from the flue. This should be taken into account when siting the flue terminal.

1. The following guidelines indicate the general requirements for siting balanced flue terminals. For GB recommendations are given in BS 5440 Pt 1. For IE recommendations are given in the current edition of I.S. 813 "Domestic Gas Installations".

2. If the terminal discharges onto a pathway or passageway, check that combustion products will not cause a nuisance and that the terminal will not obstruct the passageway.

3. If a terminal is less than 2 metres above a balcony, above ground or above a flat roof to which people have access, then a suitable terminal guard must be provided.

4. * Reduction to the boundary is possible down to 25mm but the flue deflector kit (part no. 5111068) must be fitted.

**IMPORTANT:**
- Under car ports we recommend the use of the plume displacement kit.
- The terminal position must ensure the safe and nuisance - free dispersal of combustion products.

**IMPORTANT:** If fitting a Plume Displacement Flue Kit, the air inlet must be a minimum of 150mm from any opening windows or doors).

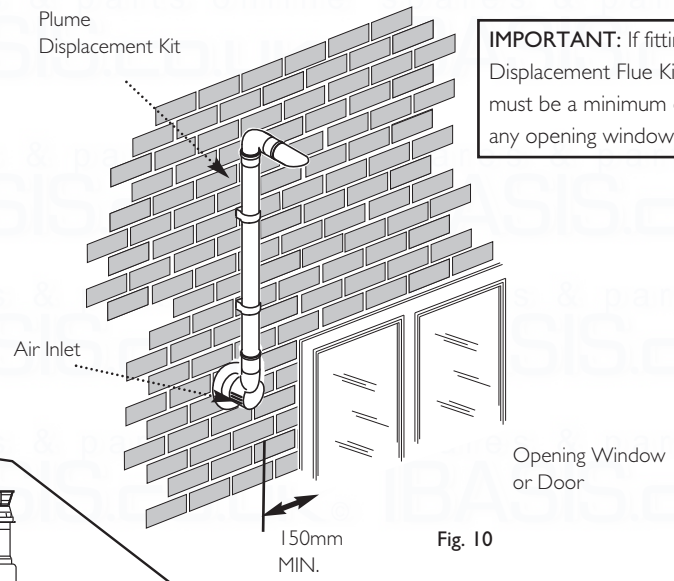


Fig. 10

 © Baxi Heating UK Ltd 2016

# 8.0 Flue Options

## 8.1 Horizontal Flue Systems

1. The standard flue is suitable only for horizontal termination applications.

2. All fittings should be fully engaged. The approximate engagement is 40mm. Apply soap solution to the seal on each fitting to aid assembly.

3. Maximum permissible equivalent flue lengths are:-

| | (60/100) | (80/125) |
|---|---|---|
| Horizontal Concentric | 10 metres | 20 metres |

4. Any additional "in line" bends in the flue system must be taken into consideration.
Their equivalent lengths are:-
Concentric Pipes:

| | |
|---|---|
| 135° bend | 0.5 metres |
| 93° bend | 1.0 metres |

Twin Flue Pipe

| | |
|---|---|
| 135° bend | 0.25 metres |
| 91.5° bend | 0.50 metres |

4. The elbow connected to the boiler adaptor is not included in any equivalent length calculations.

5. The illustrations opposite show examples of permissible flue systems.

**NOTE:** Flue length is measured from point X to Y as shown.

**IMPORTANT**
**SUPPORT - All flue systems MUST be securely supported a MINIMUM of once every metre. It is recommended that every straight piece is supported irrespective of length. Additional supports are available as accessories.**
**VOIDS - Consideration must be given to flue systems in voids and the provision of adequate access for subsequent periodic visual inspection.**

6. Read this section in conjunction with the Flue Installation Guide supplied with the boiler.

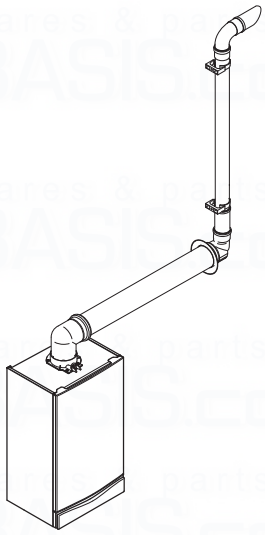

Plume Displacement 60 /100 dia Kit 1M Extensions 45° & 93° bends are also available.

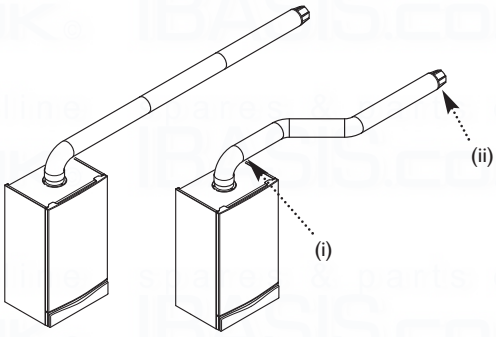


Horizontal Flues

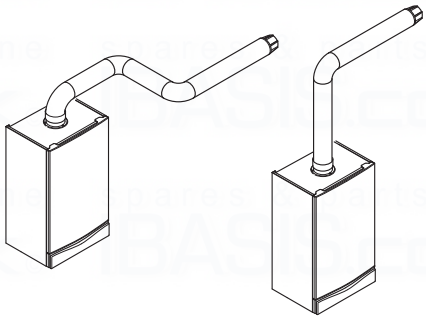

**NOTE:** Horizontal flue pipes should always be installed with a fall of at least 1.5° from the terminal to allow condensate to run back to the boiler.

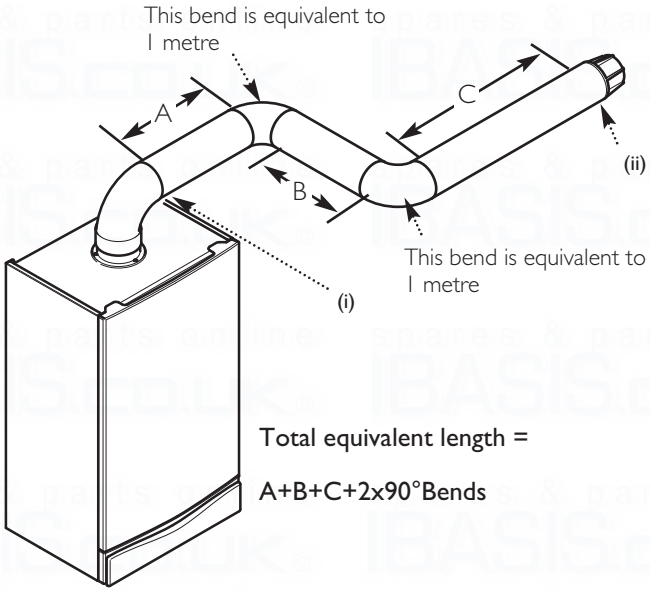


Total equivalent length =

A+B+C+2x90°Bends

© Baxi Heating UK Ltd 2016

# 8.0 Flue Options

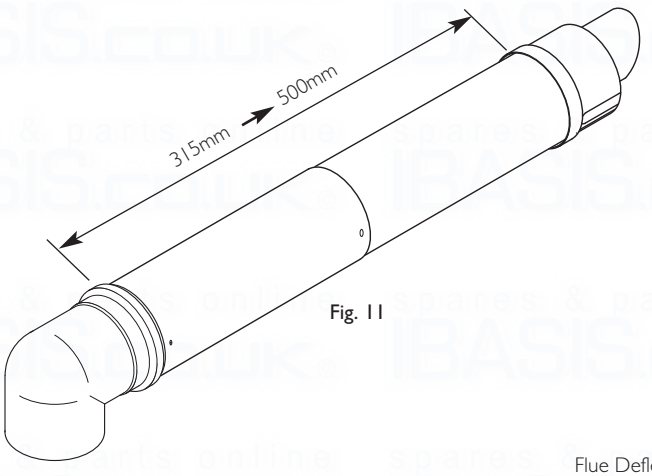


Fig. 11

## 8.2 Flue Lengths

The standard horizontal telescopic flue kit allows for lengths between 315mm and 500mm from elbow to terminal without the need for cutting (Fig. 11).
Extensions of 250mm, 500mm & 1m are available.

**The maximum permissible equivalent flue length is:**

**10 metres (60/100 system - vertical & horizontal)**
**20 metres (80/125 system - vertical & horizontal)**
**15 metres (80/80 twin pipe)**

## 8.3 Flue Trim

1. The flexible flue trims supplied can be fitted on the outer and inner faces of the wall of installation.

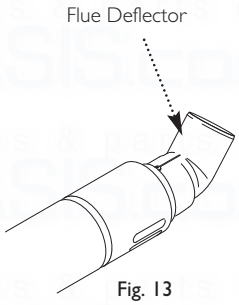


Fig. 13

## 8.4 Terminal Guard (Fig. 12)

1. When codes of practice dictate the use of terminal guards 'Multifit' accessory part no. 720627901 can be used (Note: This is not compatible with Flue Deflector referred to below).

2. There must be a clearance of at least 50mm between any part of the terminal and the guard.

3. When ordering a terminal guard, quote the appliance name and model number.

4. The flue terminal guard should be positioned centrally over the terminal and fixed as illustrated.

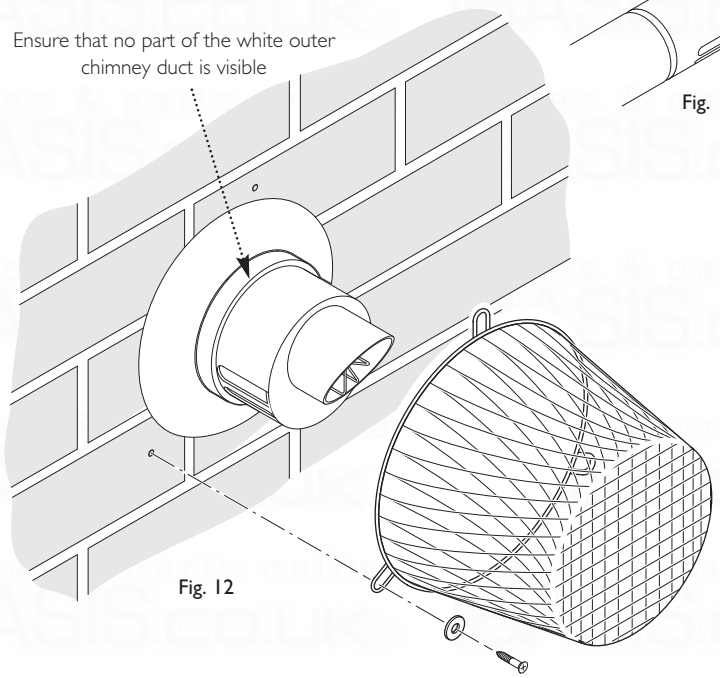


Fig. 12

## 8.5 Flue Deflector (Fig. 13)

1. Push the flue deflector over the terminal end. It may point upwards as shown, or up to 45° either way from vertical. Secure the deflector to the terminal with screws provided.

## 8.6 Flue Accessories (Fig. 13a)

1. For full details of Flue Accessories (elbows, extensions, clamps etc.) refer to the Flue Installation Guide supplied in the literature pack.

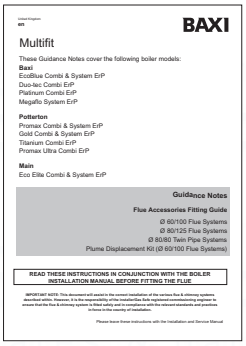

BAXI

Multifit

These Guidance Notes cover the following boiler models:

**Baxi**
EcoBlue Combi & System ErP
Duo-tec Combi ErP
Platinum Combi ErP
Megaflo System ErP

**Potterton**
Promax Combi & System ErP
Gold Combi & System ErP
Titanium Combi ErP
Promax Ultra Combi ErP

**Main**
Eco Elite Combi & System ErP

**Guidance Notes**

**Flue Accessories Fitting Guide**

Ø 60/100 Flue Systems
Ø 80/125 Flue Systems
Ø 80/80 Twin Pipe Systems
Plume Displacement Kit (Ø 60/100 Flue Systems)

**READ THESE INSTRUCTIONS IN CONJUNCTION WITH THE BOILER INSTALLATION MANUAL BEFORE FITTING THE FLUE**

IMPORTANT NOTE: This document will assist in the correct installation of the various flue & chimney systems described within. However, it is the responsibility of the installer/flue fitter registered commissioning engineer to ensure that the flue & chimney system is fitted safely and in compliance with the relevant standards and positions in force in the country of installation.

Please leave these instructions with the Installation and Service Manual

Fig. 13a

 © Baxi Heating UK Ltd 2016

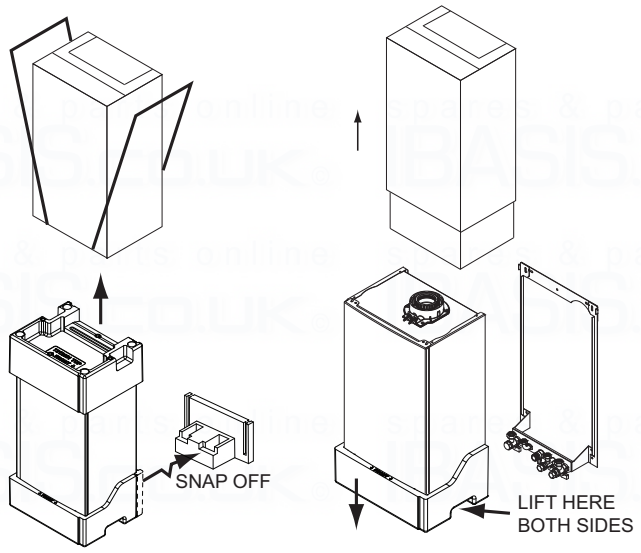


Fig. 14

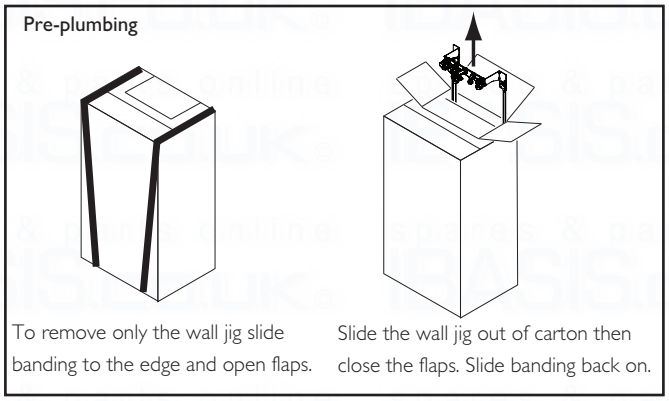


Fig. 15

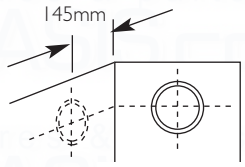


For Side Flue Exit

Fig. 16

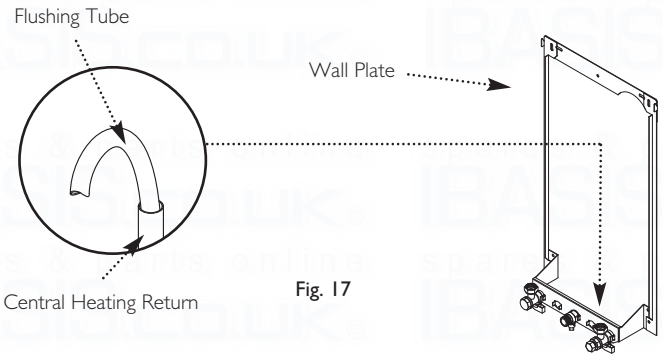


Fig. 17

# 9.0 Installation

## 9.1 Unpacking & Initial Preparation

**The gas supply, gas type and pressure must be checked for suitability before connection (see Section 7.4).**

**NOTE:** a small amount of water may drain from the boiler in the upright position.

1. See section 'Safe Manual Handling' before unpacking or lifting the boiler.

**RISK ASSESSMENT** Before commencing the installation it is recommended that the 'Five Steps to Risk Assessment' document published by the HSE is consulted, and an assessment performed as described.

2. Follow the procedure on the carton to unpack the boiler or see Fig. 14.

3. If pre-plumbing (Fig. 15) - the wall jig and fitting kit can be removed without removing the carton sleeve. Simply slide banding to the edge and open the perforated flap, lift out the jig, fitting kit and instructions. If the boiler is to be installed at a later date, close the flap and reposition the banding straps, the boiler can now be stored safely away.

4. After considering the site requirements (see Section 7.0) position the fixing template on the wall ensuring it is level both horizontally and vertically.

5. Mark the position of the two most suitable fixing slots for the wall plate and boiler lower fixing holes. It is preferable to use the vertical fixing slots.

6. Mark the position of the centre of the flue hole (rear exit). For side flue exit, mark as shown (Fig. 16).

7. If required, mark the position of the gas and water pipes. Remove the template.

8. Cut the hole for the flue (minimum diameter 116mm).

9. Drill the wall as previously marked to accept the wall plugs supplied. Secure the wall plate using the fixing screws.

10. Using a spirit level ensure that the plate is level before finally tightening the screws.

11. Connect the gas and water pipes to the valves on the wall plate using the copper tails supplied. Ensure that the sealing washers are fitted between the connections.

## 9.2 Flushing

1. Connect a tube to the central heating flow or return pipe (Fig. 17).

2. Flush thoroughly (see System Details, Section 6.2).

© Baxi Heating UK Ltd 2016

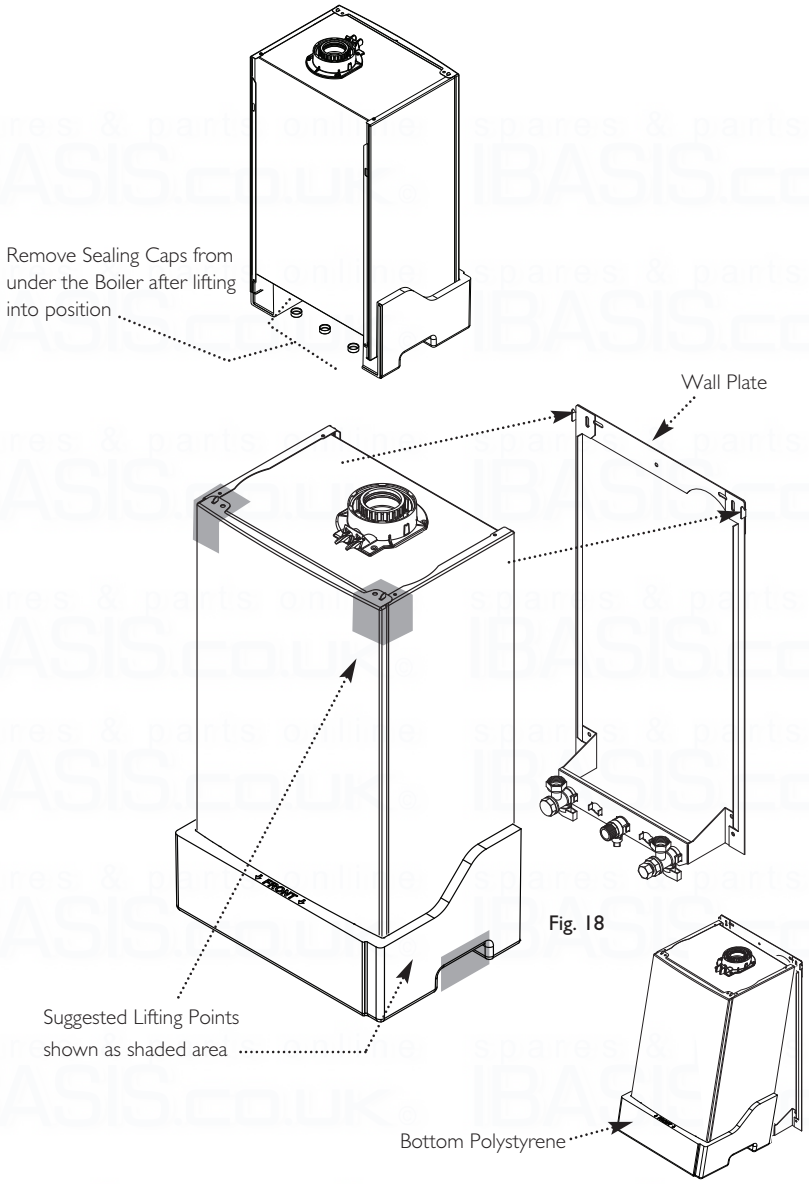


Fig. 18

When the Boiler Mounting Bracket on the Boiler is in position on the Retaining Lugs, the bottom polystyrene may be discarded allowing the boiler to swing into position

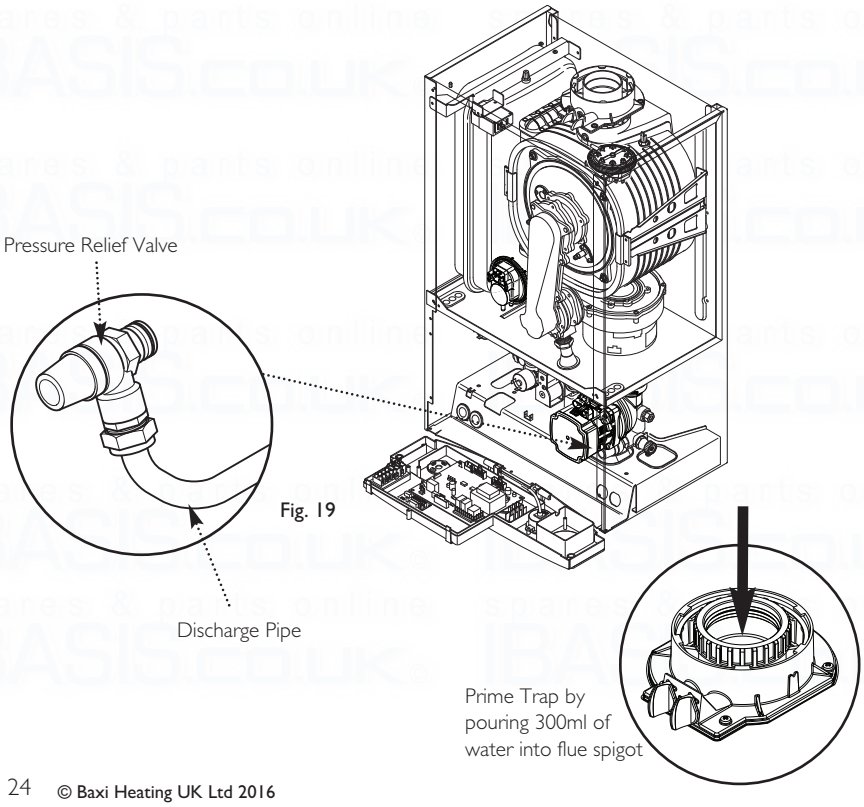


Fig. 19

## 9.0 Installation

### 9.3 Fitting The Boiler

1. Lift the boiler using the Lifting Points as shown by the shaded areas (Fig. 18). The boiler should be lifted by TWO PEOPLE. Engage the slots at the top rear of the boiler on the wall plate (Fig. 18) (see **Safe Manual Handling** page 5).

2. Ease the boiler forwards and remove the sealing caps from the boiler connections.

> **NOTE:** A small amount of water may drain from the boiler once the caps are removed.

3. **Insert the sealing washers between the valves and pipes on the wall plate and the boiler connections.**

4. Tighten all the connections.

### 9.4 Fitting the Pressure Relief Discharge Pipe (Fig. 19)

1. Remove the discharge pipe from the kit.

2. Determine the routing of the discharge pipe in the vicinity of the boiler. Make up as much of the pipework as is practical, including the discharge pipe supplied.

3. The pipework must be at least 15mm diameter and run continuously downwards to a discharge point outside the building. See section 6.7 for further details.

4. Utilising one of the sealing washers, connect the discharge pipe to the adaptor and tighten the nut.

5. Complete the discharge pipework and route it to the outside discharge point.

> **IMPORTANT:** Make all soldered joints before connecting to the pressure relief valve.

### 9.5 Condensate Drain (see section 7.7)

1. Connect the condensate drain to the trap outlet pipe.

> Ensure the discharge of condensate complies with any national or local regulations in force (see British Gas "Guidance Notes for the Installation of Domestic Gas Condensing Boilers").

2. The connection will accept 21.5mm (3/4in) plastic overflow pipe which should generally discharge internally into the household drainage system. If this is not possible, discharge into an outside drain is acceptable.

3. The boiler condensate trap should be primed by pouring approximately 300ml of water into the flue spigot. Do not allow any water to fall into the air inlet.

 © Baxi Heating UK Ltd 2016

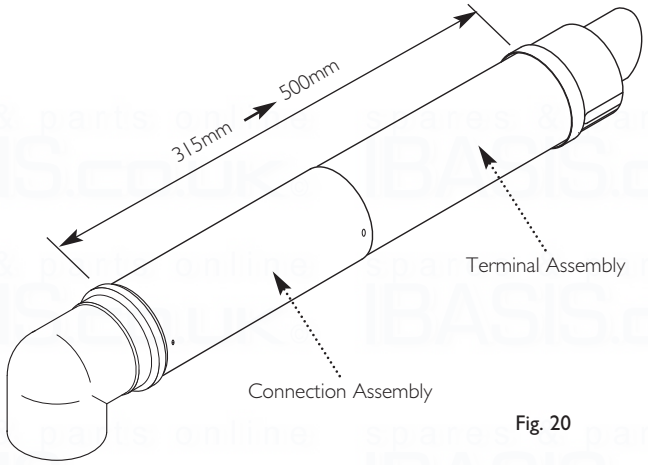


Fig. 20

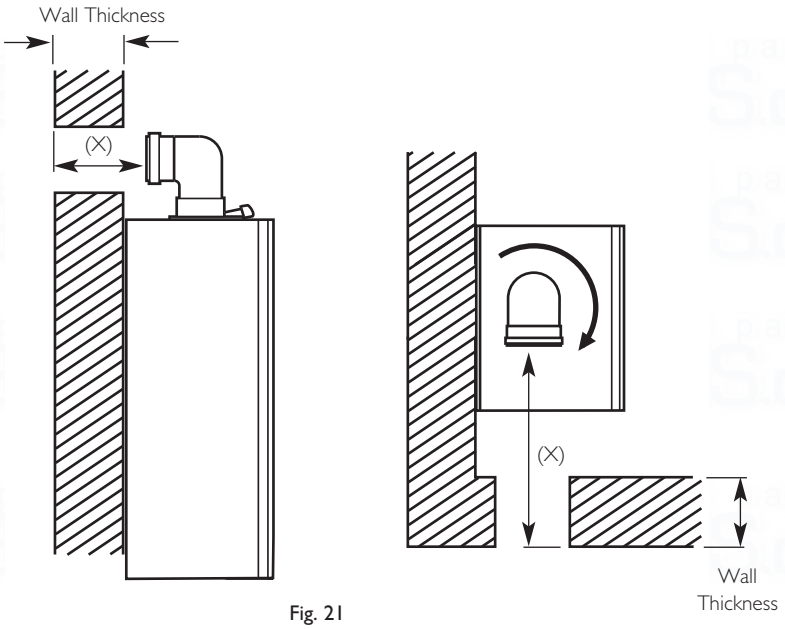


Fig. 21

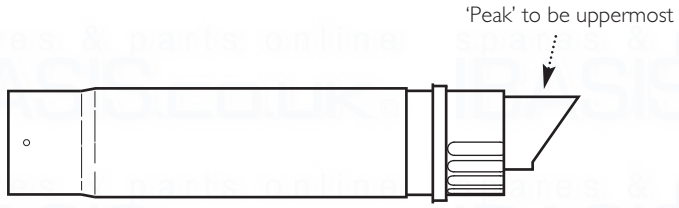


Fig. 22

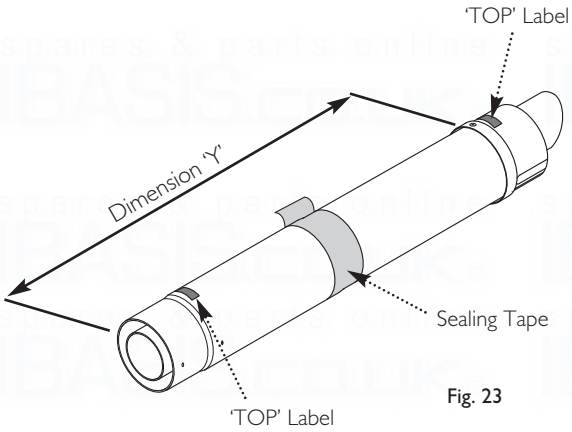


Fig. 23

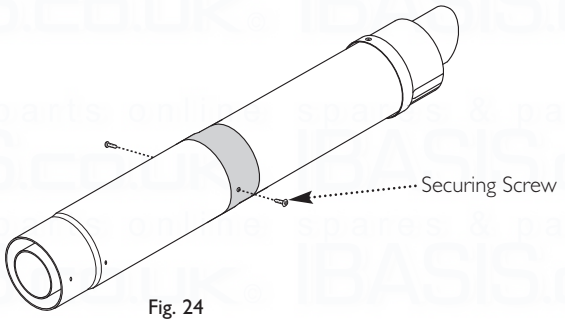


Fig. 24

## 9.0 Installation

### 9.6 Fitting The Flue

HORIZONTAL TELESCOPIC FLUE

1. There are two telescopic sections, the Terminal Assembly and the Connection Assembly, a roll of sealing tape and two self tapping screws. A 93° elbow is also supplied.

2. The two sections can be adjusted to provide a length between 315mm and 500mm (Fig. 20) when measured from the flue elbow (there is 50mm engagement into the elbow).

3. Locate the flue elbow on the adaptor at the top of the boiler. Set the elbow to the required orientation (Fig. 21).

**NOTE:** The flue elbow is angled at 93 degrees to ensure a fall back to the boiler.

4. Measure the distance from the outside wall face to the elbow. This dimension will be known as 'X' (Fig. 21).

5. If the distance from the flue elbow to the outside face of the wall ('X' in Fig. 21) is less than 250mm the Connection Assembly can be discarded and the Terminal Assembly fitted directly into the elbow.

6. In instances where the dimension 'X' (Fig. 21) is between 250mm and 315mm it will be necessary to shorten the Terminal Assembly by careful cutting to accommodate walls of these thicknesses.

7. To dimension 'X' add 40mm. This dimension to be known as 'Y'.

8. Adjust the two telescopic sections to dimension 'Y' and seal the joint with the tape provided (Fig. 23). Ensure that the labels marked 'TOP' on the Terminal and Connection Assemblies are uppermost.

9. Using the clearance holes in the Connection Assembly secure it to the Terminal Assembly using the screws supplied (Fig. 24).

© Baxi Heating UK Ltd 2016

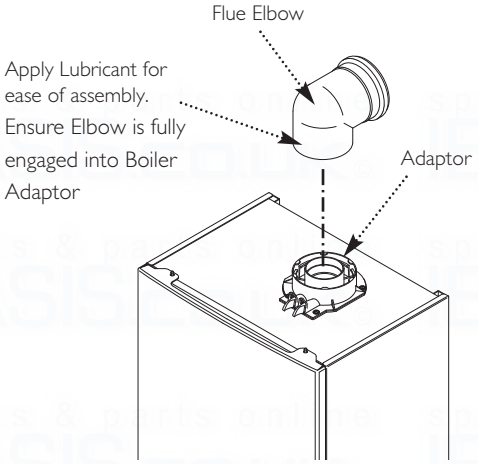


Fig. 25

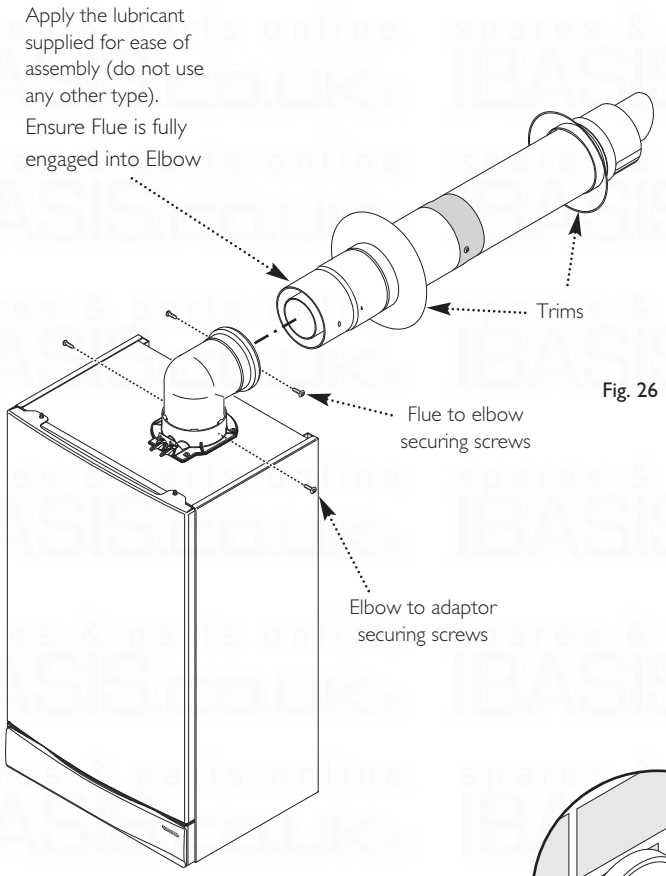


Fig. 26

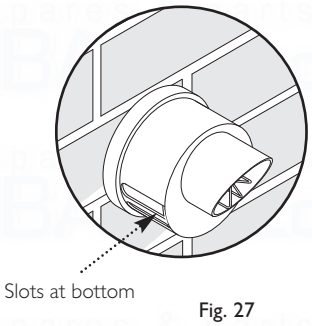


Fig. 27

## 9.6 Fitting the Flue (Cont)

10. Remove the flue elbow and insert the flue through the hole in the wall.

11. Refit the elbow to the boiler adaptor, ensuring that it is pushed fully in (Fig. 25).

12. Two flue trims are supplied, one for internal use, the other for outside. The internal trim is packaged and identified as such - it should not be used externally.

13. It is recommended that if the internal trim is being used it is first fitted over the elbow to allow access to the securing screws and then manoeuvred into place against the wall.

14. Draw the flue back through the wall and engage it in the elbow. It may be necessary to lubricate to ease assembly of the elbow and flue (Fig. 26).

15. Ensure that the terminal is positioned with the slots to the bottom (Fig. 27). Secure the flue to the elbow with the screws supplied (Fig. 26).

16. Secure the elbow flue to the boiler adaptor with the screws supplied in the boiler fittings pack (Fig. 26).

**IMPORTANT:** It is essential that the flue terminal is fitted as shown to ensure correct boiler operation and prevent water entering the flue.

17. Make good between the wall and air duct outside the building, appropriate to the wall construction and fire rating.

18. If necessary fit a terminal guard (see Section 8.4).

 © Baxi Heating UK Ltd 2016

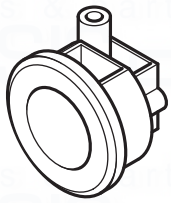


Fig. 29

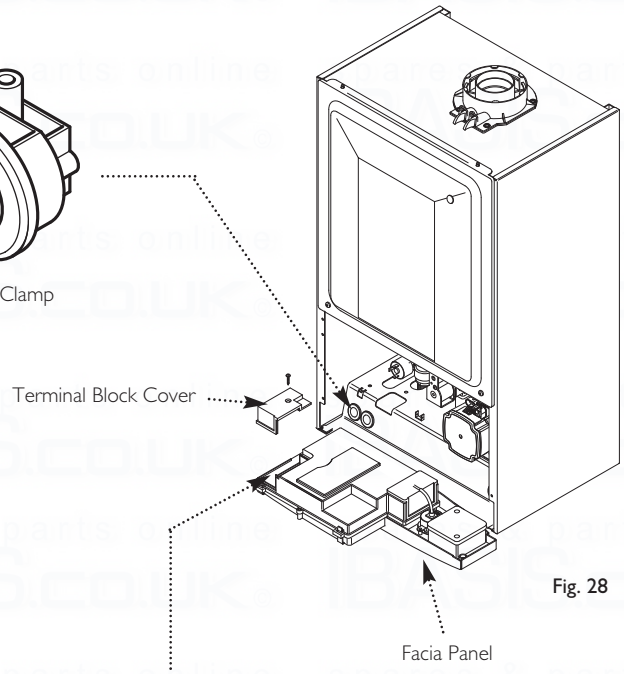


Fig. 28

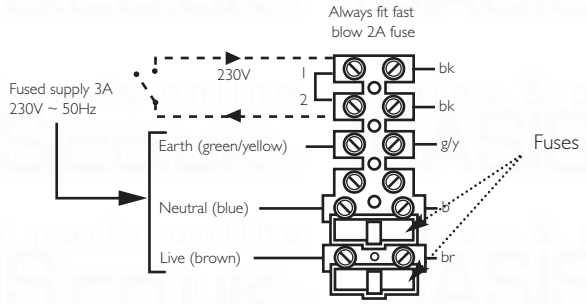


Fig. 30

Terminal Block

## 9.7 Making The Electrical Connections

The boiler is fitted with a 1.3m length of 3 core of cable. This can be connected to the fused 3A 230V 50Hz supply.

**NOTE:** Both the Live and Neutral connections are fused.

To connect an external control proceed as follows:-

1. Slacken the facia panel securing screws and lift the outercase panel so that its securing tabs are clear of the facia. Remove the panel.

2. Completely undo the screws securing the facia panel and hinge it down (Fig. 28).

3. Undo the terminal block cover securing screw and remove the cover (Fig. 28).

4. Slacken the unused cable clamp on the LH side of the boiler chassis (Fig. 29). Insert the external control wiring through the clamp and route it to the terminal block.

5. Refer to the instructions supplied with the control.

**IMPORTANT:** The external control **MUST** be suitable for 230V switching and fused 3A maximum.

6. Remove the link between terminals 1 & 2. The switched output from the external control must be connected to terminal 2 (Fig. 30).

7. Ensure that the external control input cable(s) have sufficient slack to allow the control box to drop down. Tighten the cable clamp on the boiler chassis.

8. Replace the terminal block cover, routing the external control input cable(s) through the second cut-out.

## 9.8 Preliminary Electrical Checks

1. Prior to commissioning the boiler preliminary electrical system checks should be carried out.

2. These should be performed using a suitable meter, and include checks for Earth Continuity, Resistance to Earth, Short Circuit and Polarity.

© Baxi Heating UK Ltd 2016

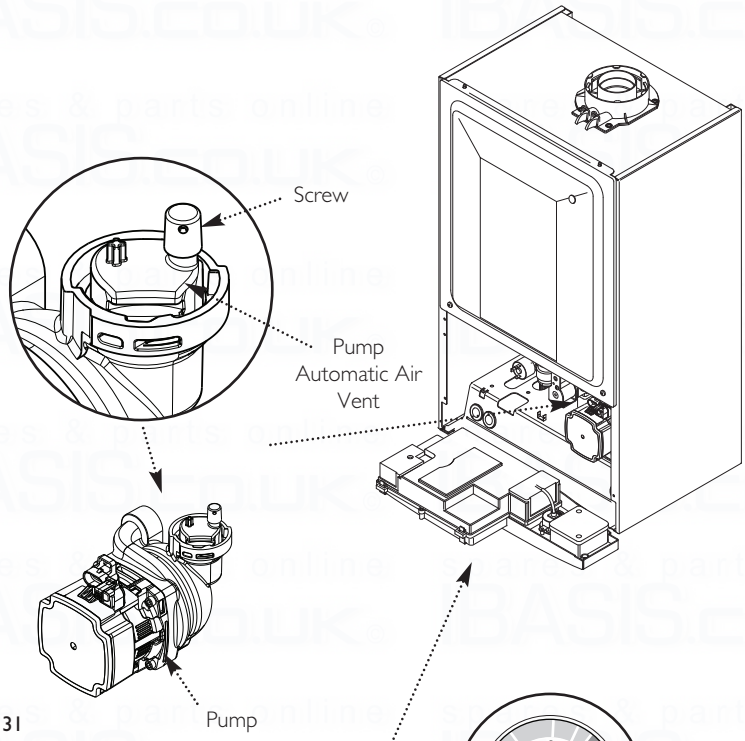


Fig. 31

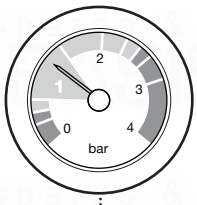


Fig. 32

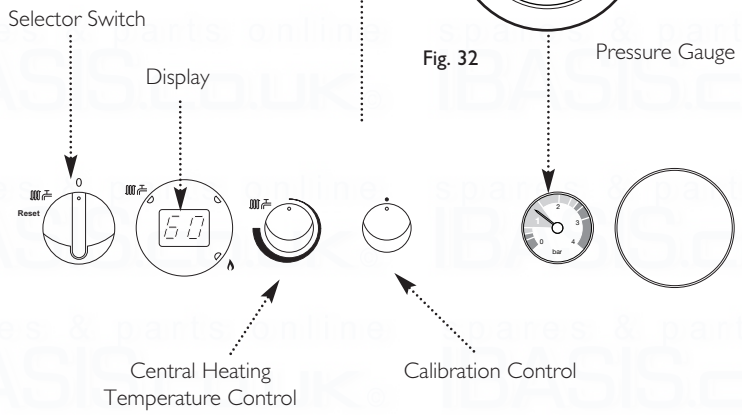


Fig. 33

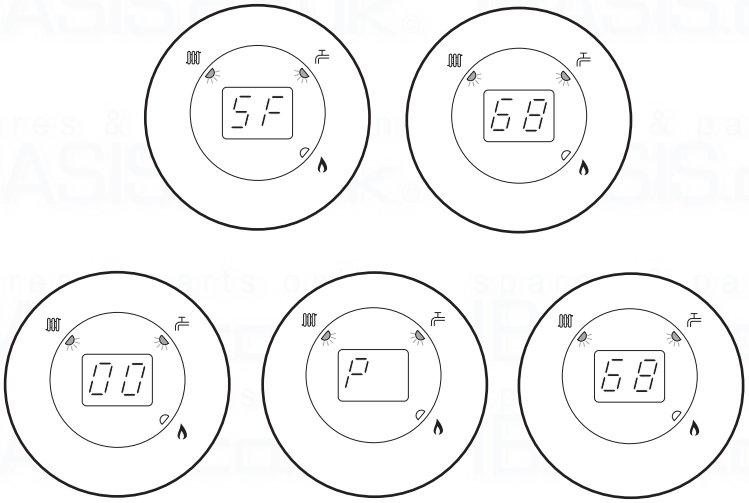

## 10.1 Commissioning the Boiler

1. Reference should be made to BS:EN 12828 & 14336 when commissioning the boiler.

2. At the time of commissioning, complete all relevant sections of the Benchmark Checklist at the rear of this publications.

3. Ensure that the filling loop is connected and open, then open the heating flow and return valves on the boiler.

4. Open the screw on the automatic air vent on the pump body (Fig. 31).

5. The system must be flushed in accordance with BS 7593 (see Section 6.2) and the flushing agent manufacturers instructions.

6. Pressurise the system to 1.5 bar then close and disconnect the filling loop.

7. Turn the gas supply on and purge the system according to in GB BS 6891 and in IE I.S. 813 "Domestic Gas Installations".

8. Test for gas tightness.

9. Hinge the facia panel upwards and refit the case front panel. Tighten the securing screws.

10. Having checked:
- That the boiler has been installed in accordance with these instructions.
- The integrity of the flue system and the flue seals.
- The integrity of the boiler combustion circuit and the relevant seals.

Proceed to put the boiler into operation as follows:

11. **The Combustion Check procedure as shown by the chart in 10.2 is mandatory. The method of setting the boiler to operate at maximum and minimum rates to comply with the procedure is described below.**

12. Ensure that all external controls are calling for heat. The actual current boiler temperature is shown on the display.

13. Turn both control knobs fully anticlockwise, then quickly turn the right hand knob 1/4 clockwise twice and back fully anticlockwise.

14. The display will now alternate between 'SF' and the current boiler temperature and both green LEDs will flash.

15. **To set to maximum rate.**
Turn the left hand knob fully clockwise. As the knob is turned the display will change, indicating the fan speed.

16. The display will show '00', indicating maximum rate, then revert to 'P ' alternating with the current boiler temperature.

17. **To set to minimum rate.**
Turn the left hand knob fully anti-clockwise. As the knob is turned the display will change, indicating the fan speed. When the display reads ' 0' the boiler runs at minimum rate.

18. This function is maintained for 20 minutes unless the maximum CH temperature is exceeded. The function can be disabled at any time by turning the right hand knob.

 © Baxi Heating UK Ltd 2016

## 10.2 Checking Combustion

1. Follow the flow chart opposite.

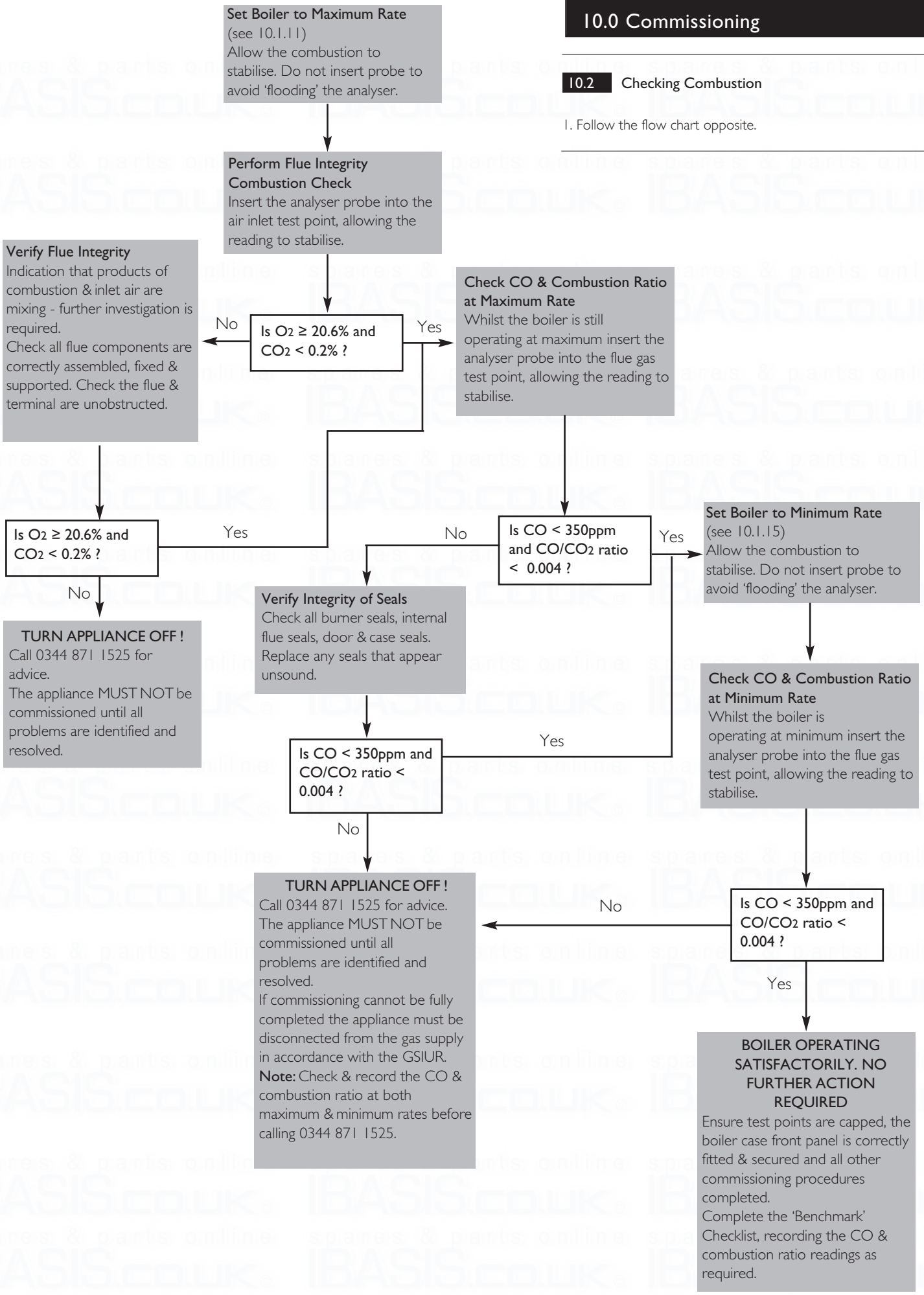


© Baxi Heating UK Ltd 2016

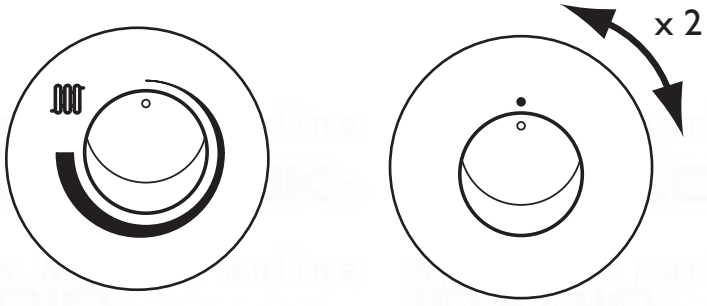


Fig. 34

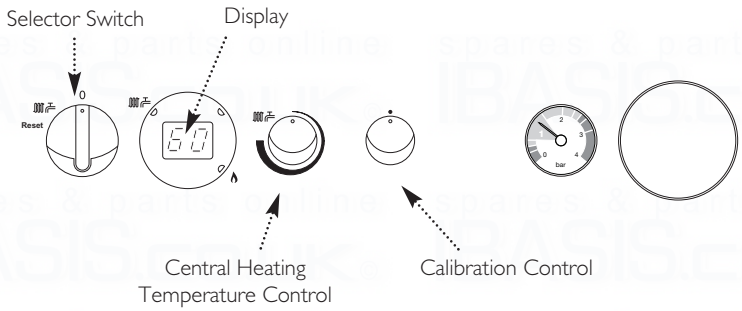


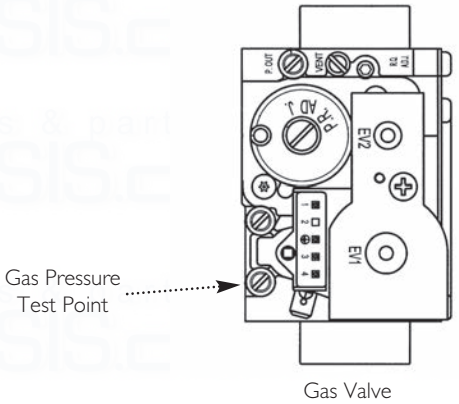


Fig. 34

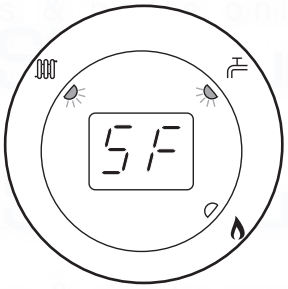


Fig. 35

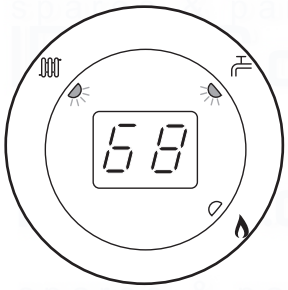


Fig. 36

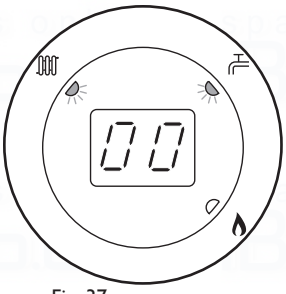


Fig. 37

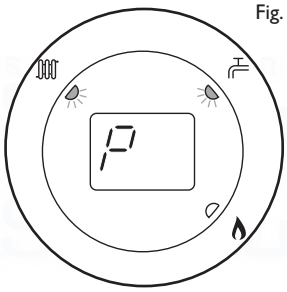


Fig. 38

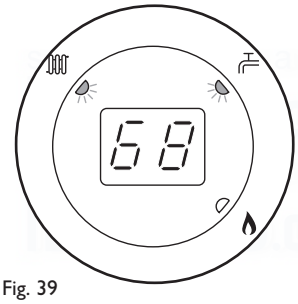


Fig. 39

# 10.0 Commissioning

## 10.3 Check the Operational (Working) Gas Inlet Pressure

1. Ensure that all controls are calling for heat, and the selector switch is in the central heating and hot water position ( ). The current boiler temperature is shown on the display.

2. To check the gas rate it is necessary to set the boiler to 'Calibration Mode'.

3. Turn both temperature control knobs fully anticlockwise, then quickly turn the Calibration Control knob 1/4 clockwise twice and back fully anticlockwise (Fig. 34).

4. The display will now alternate between 'SF' and the current boiler temperature and both green LEDs will flash (Figs. 35 & 36).

5. Turn CH temperature control knob fully clockwise. As the knob is turned the display will change from '0' to '00' (Fig. 37) indicating maximum rate, then revert to 'P' alternating with the current boiler temperature (Figs 38 & 39).

6. With the boiler operating in the maximum rate condition check that the operational (working) gas pressure at the inlet gas pressure test point (Fig. 34) is in accordance with B.S. 6798 & B.S. 6891.

7. Ensure that this inlet pressure can be obtained with all other gas appliances in the property working.

**Measure the Gas Rate**

8. With any other appliances & pilot lights turned OFF the gas rate can be measured. It should be between:-

| | |
|---|---|
| 12 model | 1.31 $m^3/h$ |
| 15 model | 1.69 $m^3/h$ |
| 18 model | 1.95 $m^3/h$ |
| 24 model | 2.61 $m^3/h$ |
| 32 model | 3.48 $m^3/h$ |

9. The 'Calibration Function' is active for 20 minutes unless the maximum CH temperature is exceeded.

10. The function can be disabled at any time by turning the Calibration Control knob.

11. Carefully read and complete all sections of the Benchmark Commissioning Checklist at the rear of this publication that are relevant to the appliance and installation. These details will be required in the event of any warranty work. The publication must be handed to the user for safe keeping and each subsequent regular service visit recorded.

12. For IE, it is necessary to complete a "Declaration of Conformity" to indicate compliance with I.S. 813. An example of this is given in I.S. 813 "Domestic Gas Installations". This is in addition to the Benchmark Commissioning Checklist.

 © Baxi Heating UK Ltd 2016

## 10.3 Check the Operational (Working) Gas Inlet Pressure (cont.)

13. **Working Gas Pressures**
If the pressure drops are greater than shown in Fig. 39a a problem with the pipework or connections is indicated. Permissible pressure drop across system pipework ≤ 1 mbar.

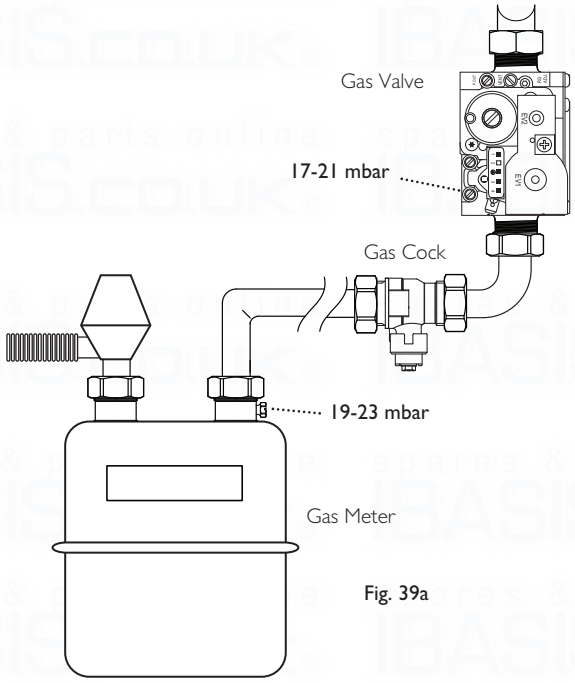


Fig. 39a

# 11.0 Completion

## 11.1 Completion

1. Instruct the user in the operation of the boiler and system including external controls, explaining the operational sequence.

2. Set the central heating and hot water temperature control knobs to the requirements of the user.

3. Carefully read and complete all sections of the Benchmark Commissioning Checklist at the rear of this publication that are relevant to the appliance and installation. These details will be required in the event of any warranty work. The publication must be handed to the user for safe keeping and each subsequent regular service visit recorded.

4. For IE, it is necessary to complete a "Declaration of Conformity" to indicate compliance with I.S. 813. An example of this is given in I.S. 813 "Domestic Gas Installations". This is in addition to the Benchmark Commissioning Checklist.

5. Hand over the Users Operating, Installation and Servicing Instructions giving advice on the necessity of regular servicing.

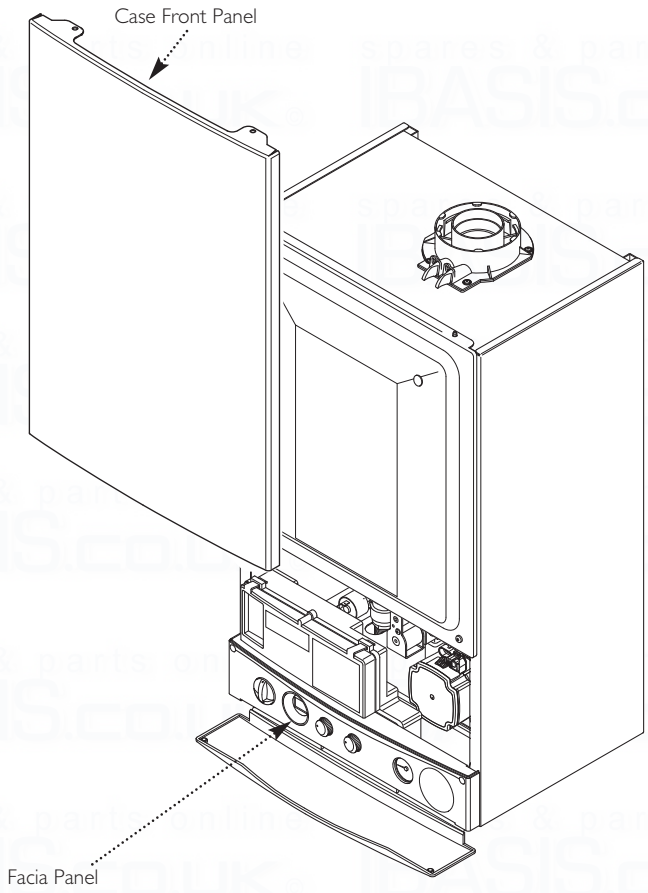


Fig. 40

© Baxi Heating UK Ltd 2016

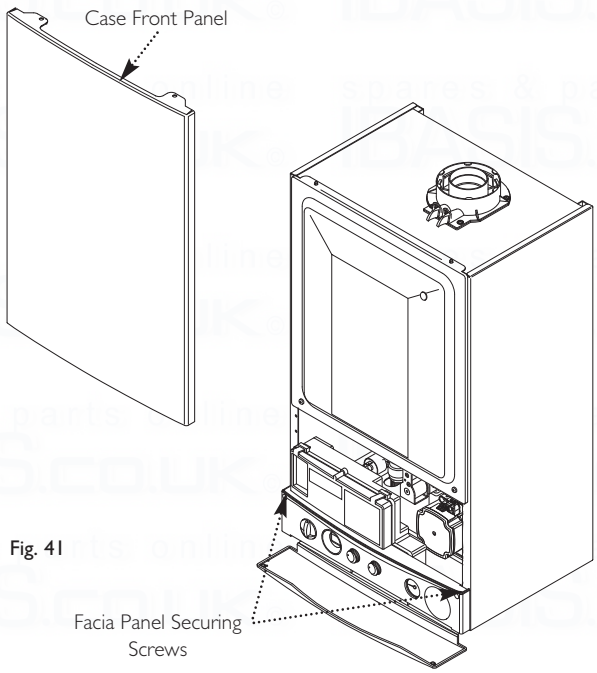


Fig. 41

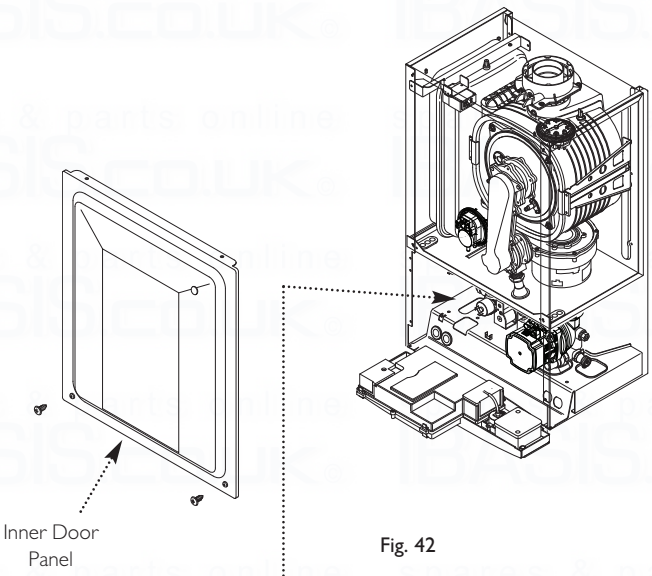


Fig. 42

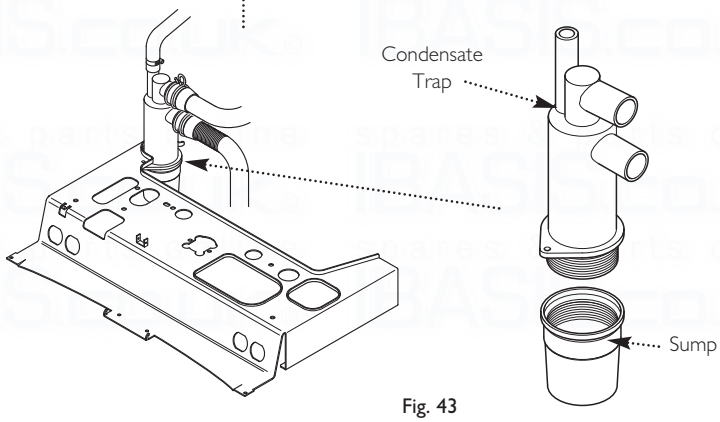


Fig. 43

## 12.1 Annual Servicing

1. For reasons of safety and economy, it is recommended that the boiler is serviced annually. Servicing must be performed by a competent person in accordance with B.S. 7967-4.

2. After servicing, complete the relevant Service Interval Record section of the Benchmark Commissioning Checklist at the rear of this publication.

**IMPORTANT:** During routine servicing, and after any maintenance or change of part of the combustion circuit, the following must be checked:-
- The integrity of the complete flue system and the flue seals.
- The integrity of the boiler combustion circuit and relevant seals as described in Section 13.2.
- The operational gas inlet pressure as described in Section 10.3.1 to 10.3.7 and the gas rate as described in 11.3.8.
- The combustion performance as described in **'Check the Combustion Performance'** (13.1.4 to 13.1.6 below).

3. **Competence to carry out Checking Combustion Performance**
B.S. 6798 'Specification for Installation & Maintenance of Gas Fired Boilers not exceeding 70kW' advises that:-

- The person carrying out a combustion measurement should have been assessed as competent in the use of a flue gas analyser and the interpretation of the results.
- The flue gas analyser used should be one meeting the requirements of BS7927 or BS-EN50379-3 and be calibrated in accordance with the analyser manufacturers' requirements.
- Competence can be demonstrated by satisfactory completion of the CPA1 ACS assessment, which covers the use of electronic portable combustion gas analysers in accordance with BS 7967, Parts 1 to 4.

**Check the Combustion Performance ($CO/CO_2$ ratio)**
4. Set the boiler to operate at maximum rate as described in Section 14.1.1 to 14.1.6.

5. Remove the plug from the flue sampling point, insert the analyser probe and obtain the $CO/CO_2$ ratio. **This must be less than 0.004**.

6. If the combustion reading ($CO/CO_2$ ratio) is greater than this, and the integrity of the complete flue system and combustion circuit seals has been verified, and the inlet gas pressure and gas rate are satisfactory either:
- Perform the 'Annual Servicing - Inspection' (Section 12.2) & re-check
- Adjust the gas valve (Section 14.0) & re-check
- Replace the gas valve (Section 13.24) & re-check

## 12.2 Annual Servicing - Inspection

1. Ensure that the boiler is cool.

2. **Ensure that both the gas and electrical supplies to the boiler are isolated.**

3. Slacken the screws securing the facia panel. Lift the outercase panel so that its securing tabs are clear of the facia. Remove the panel, allowing the facia to hinge down (Fig. 41).

4. Remove the screws securing the inner door panel. Lift the panel slightly to disengage it from the studs on top of the case (Fig. 42).

5. Unscrew the sump from the bottom of the condensate trap assembly (Fig. 43) and remove any deposits from the sump and trap. Clean as necessary and replace the sump

 © Baxi Heating UK Ltd 2016

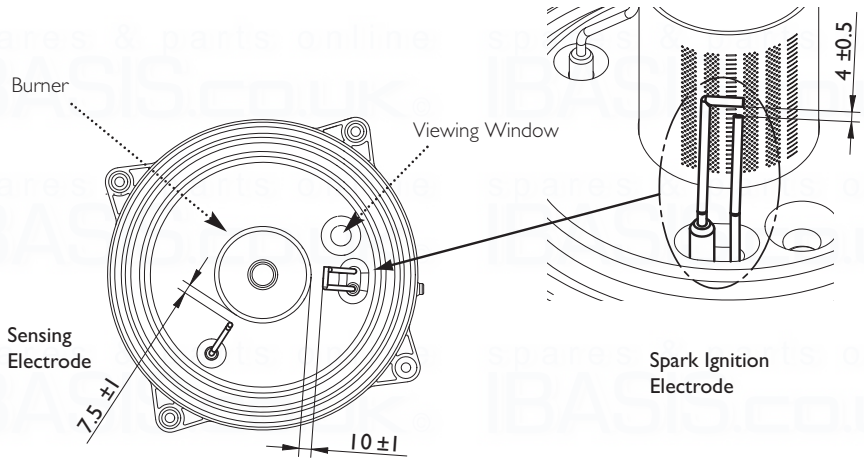


Electrode Position

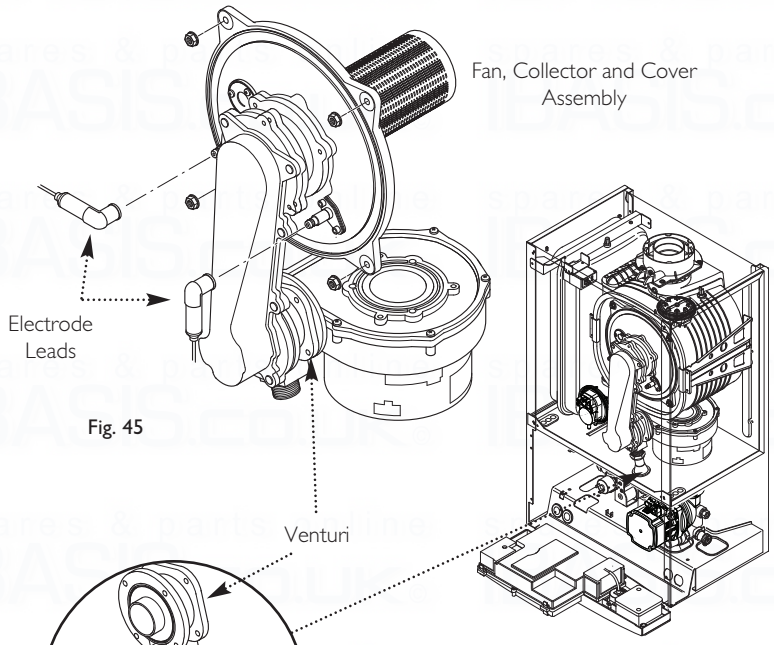


Fig. 45

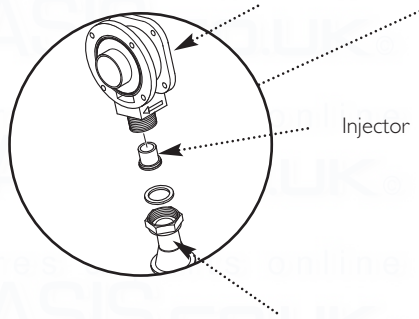


Fig. 44

## 12.2 Annual Servicing - Inspection (Cont)

6. Undo the nut on the gas inlet pipe to the venturi (Fig. 44) and pull the sensing pipe off the fan.

7. Disconnect the electrode leads, noting their position, and the fan electrical plugs (Fig. 45).

8. Undo the four nuts retaining the combustion box cover to the heat exchanger. Disconnect the sensing pipe and wires from the air pressure switch.

9. Carefully draw the fan, collector, air pressure switch and cover assembly forward, being careful to retain the injector in the venturi (Figs. 44 & 45).

10. Clean any debris from the heat exchanger and check that the gaps between the tubes are clear.

11. Inspect the burner, electrodes position and insulation, cleaning or replacing if necessary. Clean any dirt or dust from the air box.

12. Reassemble in reverse order.

**NOTE:** The sensing pipe must be reconnected to the fan, not the venturi.

13. Complete the relevant Service Interval Record section of the Benchmark Commissioning Checklist at the rear of this publication and then hand it back to the user.

© Baxi Heating UK Ltd 2016

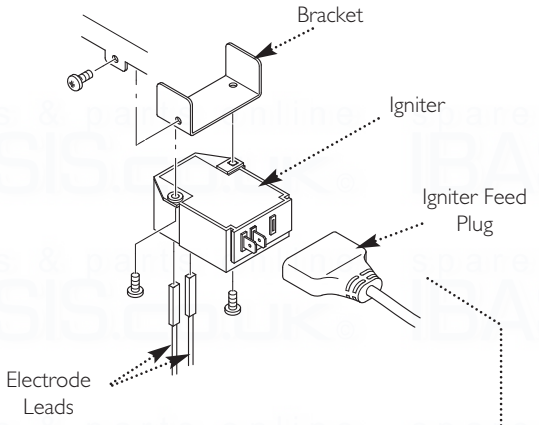


Fig. 46

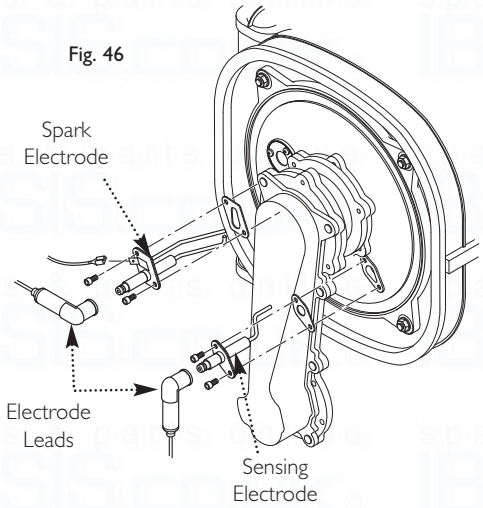


Fig. 47

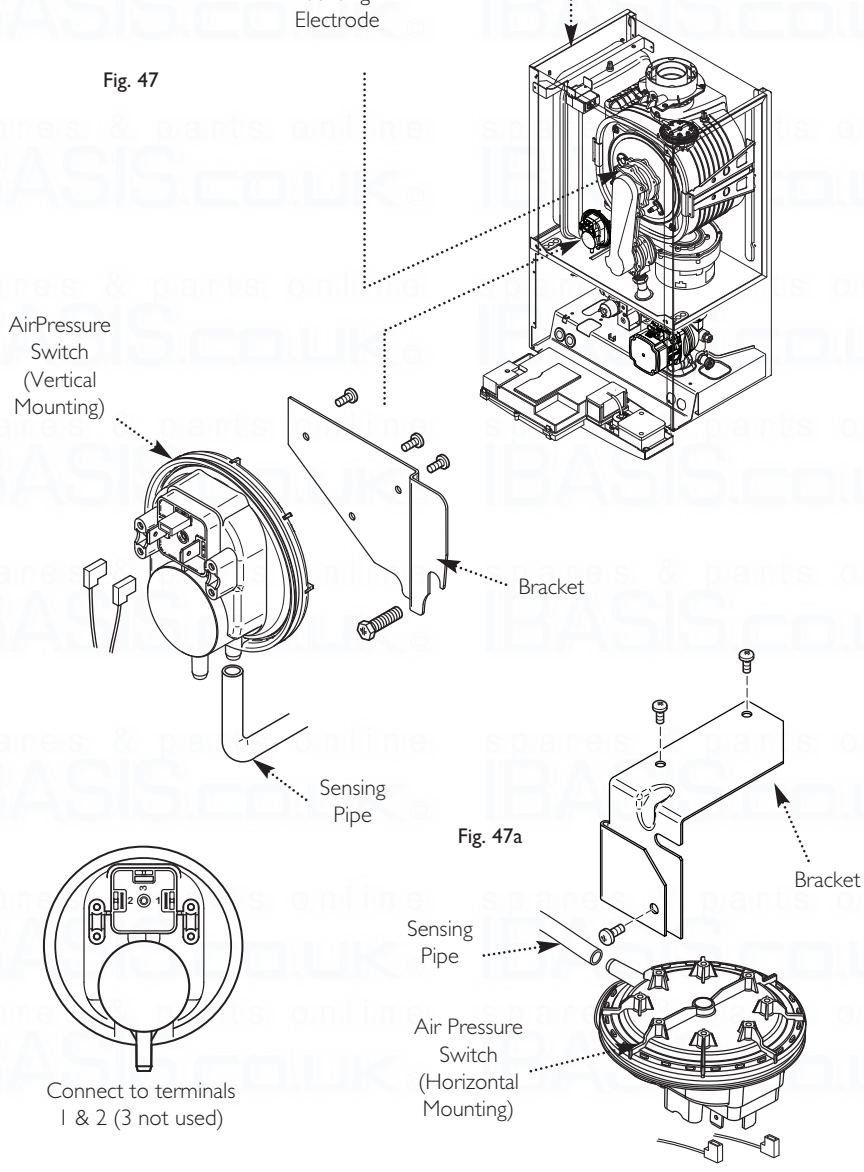


Fig. 47a

## 13.0 Changing Components

**IMPORTANT:** When changing components ensure that both the gas and electrical supplies to the boiler are isolated before any work is started. When the component has been changed turn the selector switch fully anticlockwise against the spring pressure to the reset position and hold for 5 seconds to reset the boiler before recommissioning.

See Section 12.2 "Annual Servicing" for removal of case panel, door etc.

### 13.1 Igniter (Fig. 46)

1. Disconnect the igniter feed plug and the electrode leads, noting their positions.

2. Undo the screw securing the bracket to the boiler.

3. Remove the igniter and transfer the bracket to the new component.

4. Reassemble in reverse order.

### 13.2 Spark and Sensing Electrodes (Fig. 47)

1. Disconnect the electrode leads, noting their positions.

2. Remove the retaining screws securing each of the electrodes to the combustion box cover and remove the electrodes.

3. Check the condition of the sealing gaskets and replace if necessary. Reassemble in reverse order.

### 13.3 Air Pressure Switch (Fig. 47a)

Depending on model the switch can be mounted vertically or horizontally.

VERTICAL MOUNTING
1. Slacken the screw securing the Air Pressure Switch bracket to the collector, and remove the screws holding the switch to the bracket.

2. Ease the sensing pipe off the P1 spigot on the switch and disconnect the two wires.

3. Reassemble in reverse order.

HORIZONTAL MOUNTING
1. Undo the screw securing bracket to the side panel. Remove the screws holding the Air Pressure Switch to the bracket.

2. Ease the sensing pipe off the P1 spigot on the switch and disconnect the two wires.

3. Reassemble in reverse order.

 © Baxi Heating UK Ltd 2016

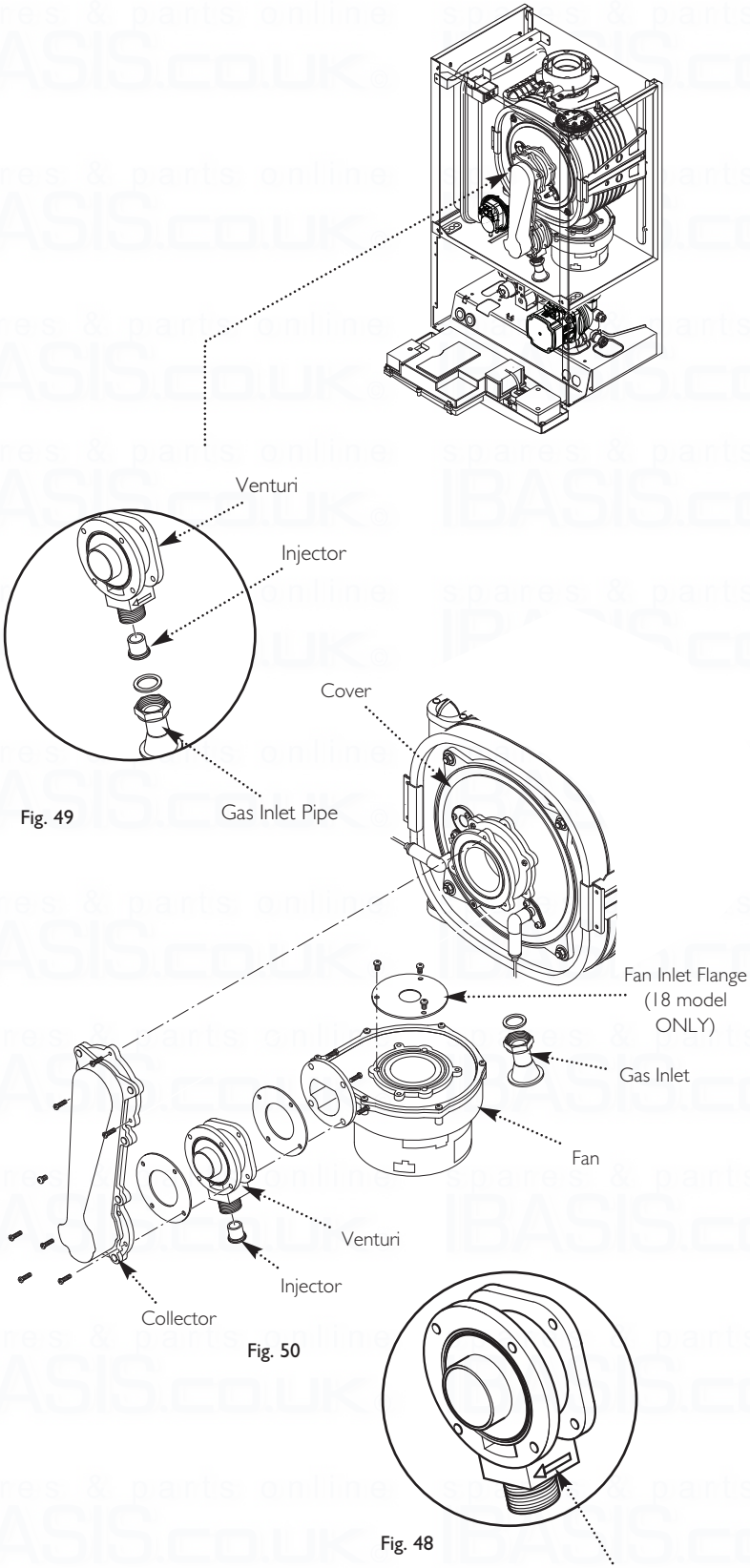


Fig. 49

Fig. 50

Fig. 48

## 13.4 Fan (Fig. 50)

1. Undo the nut on the gas inlet pipe to the venturi (Fig. 49) and pull the sensing pipe off the fan.

2. Disconnect the electrode leads, noting their position and disconnect the fan electrical plugs. Disconnect the sensing pipe and wires from the air pressure switch (not 32 models).

3. Undo the screws securing the collector to the extension piece.

4. Remove the collector, air pressure switch and fan assembly, being careful to retain the injector in the venturi.

5. Undo the screws securing the fan to the venturi and fit the new fan. On 18 models ONLY transfer the fan inlet flange to the new fan. Replace the seal if necessary.

6. Examine the burner gasket and replace if necessary.

7. Reassemble in reverse order, ensuring that the injector is in place and the sensing pipe is connected to the fan.

## 13.5 Venturi (Fig. 50)

1. Remove the collector and fan assembly as described in section 13.4.

2. Extract the injector from the venturi.

3. Undo the screws securing the fan to the venturi and the venturi to the collector.

**IMPORTANT:** When fitting the new venturi, ensure the arrows on it's base point into the collector (Fig. 48).

4. Examine the seals and burner gasket, replace if necessary.

5. Reassemble in reverse order, ensuring that the injector is in place.

## 13.6 Injector (Fig. 50)

1. Remove the collector and fan assembly as described in section 13.4.

2. Extract and replace the injector and reassemble in reverse order.

© Baxi Heating UK Ltd 2016

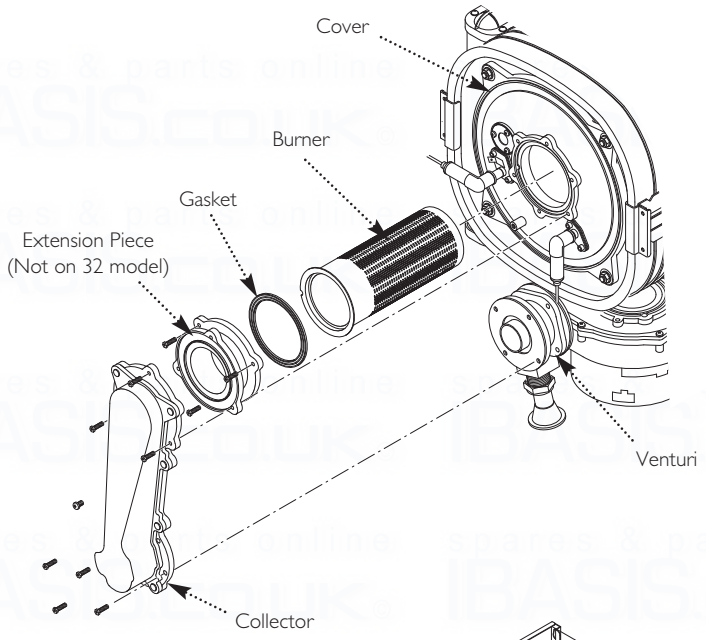


Fig. 51

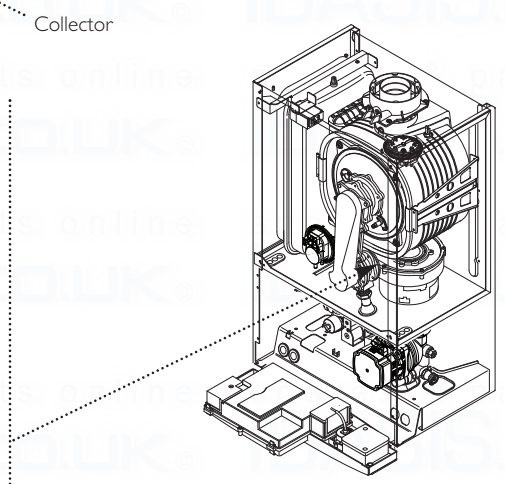

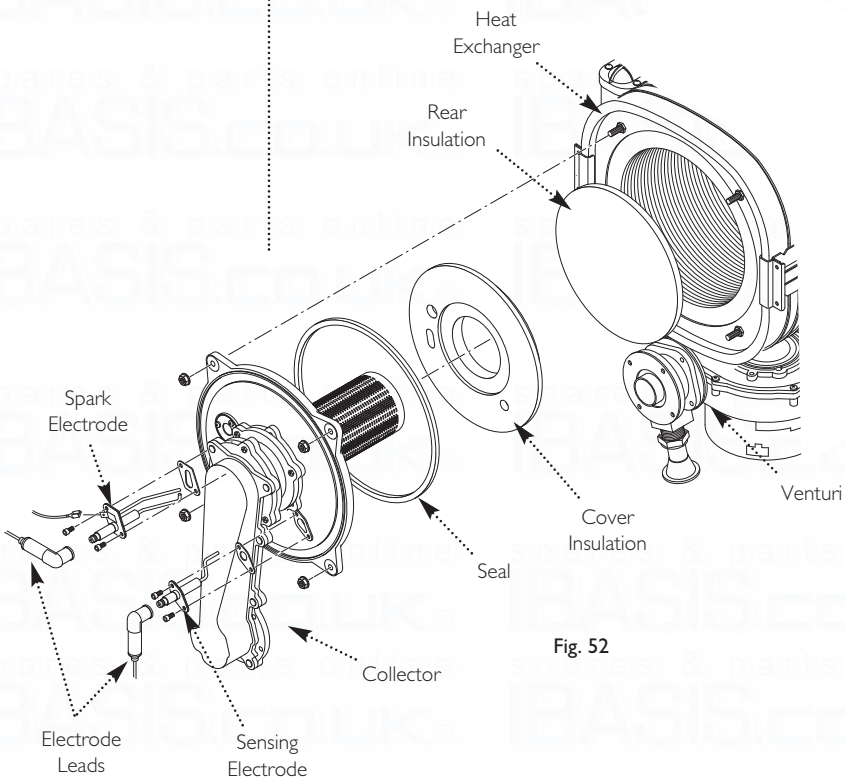


Fig. 52

## 13.7 Burner (Fig. 51)

1. Undo the screws securing the collector to the venturi and extension piece. Allow the air pressure switch to rest on the air box lower panel. Remove the extension piece from the cover (not 32 models).

2. Withdraw the burner from the cover and replace with the new one.

3. Examine the gasket, replacing if necessary.

4. Reassemble in reverse order.

## 13.8 Insulation (Fig. 52)

1. Remove the electrode leads, noting their positions. Also remove the electrodes as described in section 13.2.

2. Undo the screws securing the collector to the venturi and the nuts holding the cover to the heat exchanger. Allow the air pressure switch to rest on the air box lower panel (not 32 models). Draw the collector and cover assembly away.

3. Remove the cover insulation piece.

4. Fit the new insulation carefully over the burner and align it with the slots for the electrodes.

5. If the rear insulation requires replacement remove it and all debris from the heat exchanger. Also it may be necessary to separately remove the spring clip from the pin in the centre of the heat exchanger and the 'L' shaped clips embedded in the insulation.

6. DO NOT remove the shrink-wrapped coating from the replacement rear insulation. Keep the insulation vertical and press firmly into position.

7. Examine the cover seal and replace if necessary.

 © Baxi Heating UK Ltd 2016

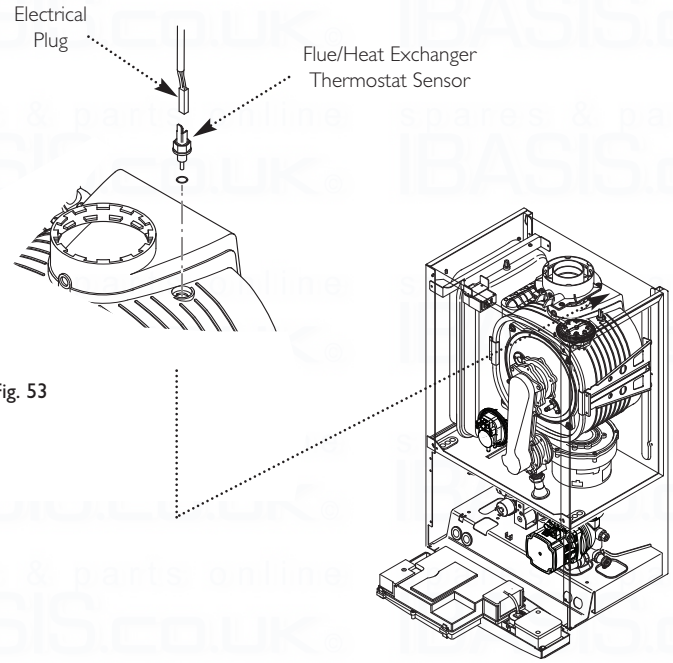


Fig. 53

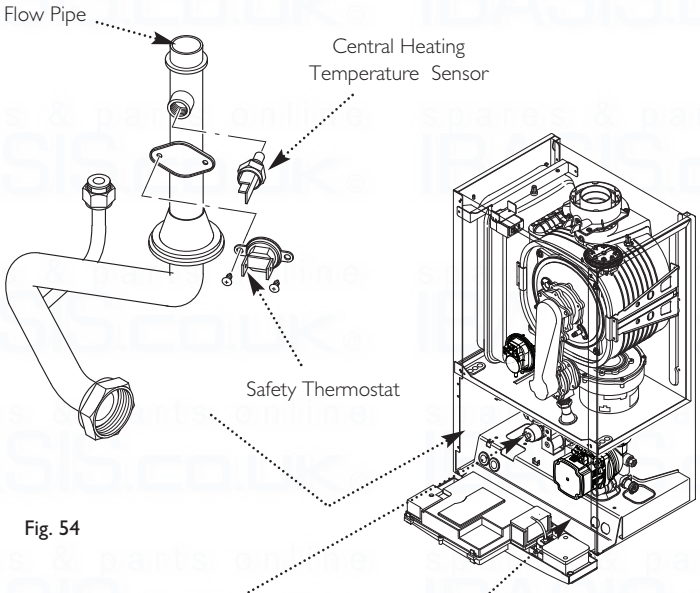


Fig. 54

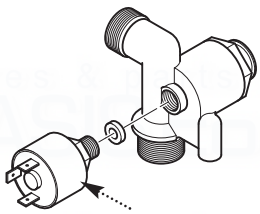


Fig. 55

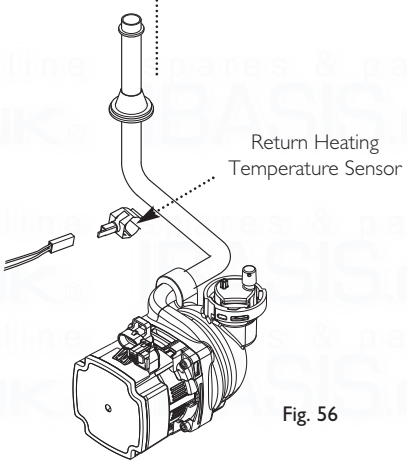


Fig. 56

## 13.9 Flue/Heat Exchanger Thermostat Sensor (Fig. 53)

1. Ease the retaining tab on the sensor away and disconnect the electrical plug.

2. Turn the sensor 90° anticlockwise to remove - it is a bayonet connection.

3. Reassemble in reverse order.

## 13.10 Water Pressure Sensor (Fig. 55)

1. Drain the primary circuit.

2. Disconnect the two wires from the sensor.

3. Undo the nut on the flow pipe securing and sealing the sensor.

4. Remove the sensor, examine the sealing washer, replacing if necessary.

5. Reassemble in reverse order. The component is not polarised - either wire will fit each terminal.

## 13.11 Central Heating Temperature Sensor (NTC) (Fig. 54)

1. Ease the retaining tab on the sensor away and disconnect the electrical plug.

2. Unscrew the sensor from it's pocket and reassemble in reverse order. The plug will only fit one way.

## 13.12 Safety Thermostat (Fig. 54)

1. Pull the plug off the thermostat.

2. Remove the screws securing the thermostat to the mounting plate on the flow pipe.

3. Reassemble in reverse order, ensuring that the plug is pushed fully on.

## 13.13 Return Heating Temperature Sensor (Fig. 56)

1. Ease the retaining tab on the sensor away and disconnect the electrical plug.

2. Prise the sensor retaining clip off the pipe and remove the sensor from the clip.

3. Reassemble in reverse order.

© Baxi Heating UK Ltd 2016

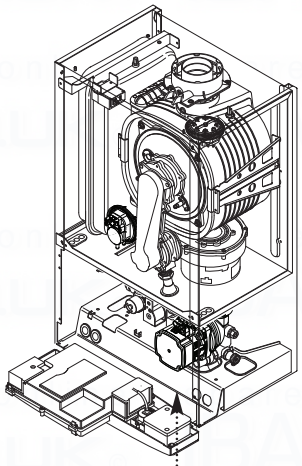

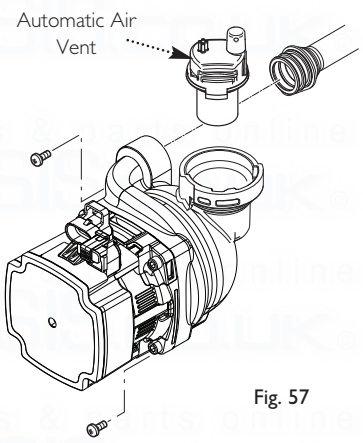


Fig. 57

Grundfos Pump

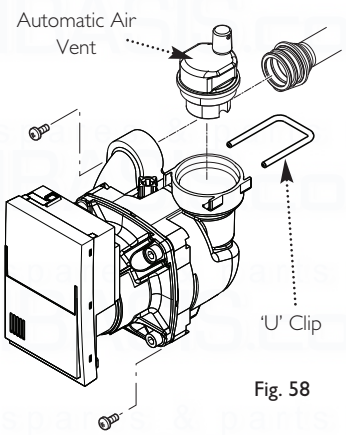


Fig. 58

Wilo Pump

## 13.14 Pump - Complete (Figs. 57 & 58)

1. Drain the boiler primary circuit and disconnect the electrical plug from the pump motor.

2. Undo the two screws securing the body to the pipe and manifold and draw the pump forwards.

3. Examine the 'O' ring seals on the return pipe and manifold, replacing if necessary.

4. Reassemble in reverse order.

## 13.15 Automatic Air Vent - Grundfos (Fig. 57)

1. Drain the boiler primary circuit and unscrew the automatic air vent from the pump body.

2. Examine the 'O' ring seal, replacing if necessary, and fit it to the new automatic air vent.

3. Reassemble in reverse order.

## 13.16 Automatic Air Vent - Wilo (Fig. 58)

1. Drain the boiler primary circuit and remove the 'U' clip securing the automatic air vent to the pump body.

2. Pull the vent upwards away from the body.

3. Examine the 'O' ring seal, replacing if necessary, and fit it to the new automatic air vent.

4. Reassemble in reverse order.

 © Baxi Heating UK Ltd 2016

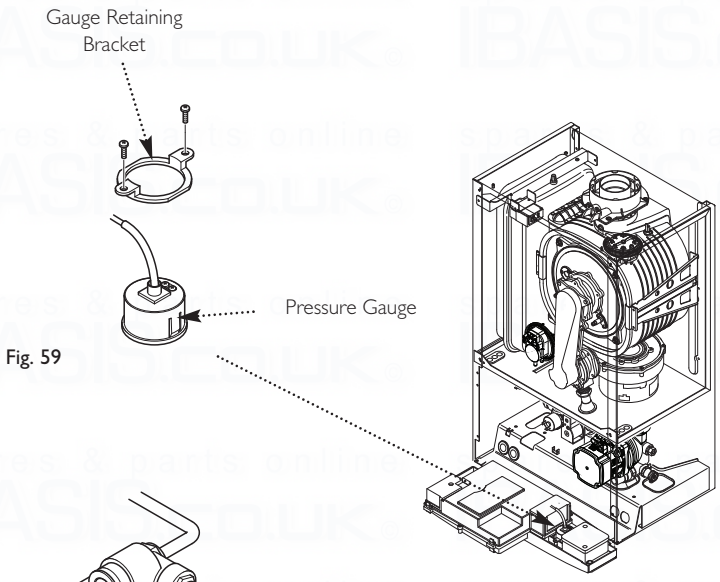


Fig. 59

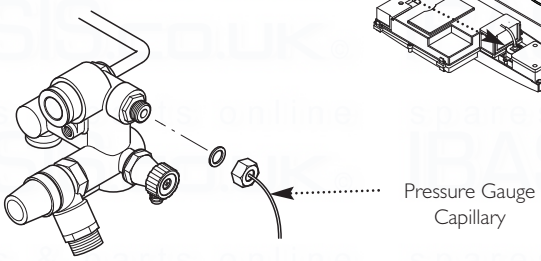


Fig. 60

## 13.17 Pressure Gauge (Figs. 59 & 60)

1. Drain the primary circuit and undo the nut on the pressure gauge capillary.

2. Undo the screws securing the gauge retaining bracket.

3. Remove the bracket and gauge assembly. Depress the barbs on the side of the gauge and remove the retaining bracket.

4. Examine the sealing washer, replace if necessary.

5. Reassemble in reverse order.

## 13.18 Pressure Relief Valve (Fig. 61)

1. Drain the primary circuit.

2. Disconnect the discharge pipe from the valve. Using a suitable hexagon key undo the grub screw sufficiently to release the valve.

3. Note the orientation of the valve, rotate it and withdraw it from the manifold.

4. Fit the new valve and 'O' ring seal and set to the previously noted orientation. Reassemble in reverse order.

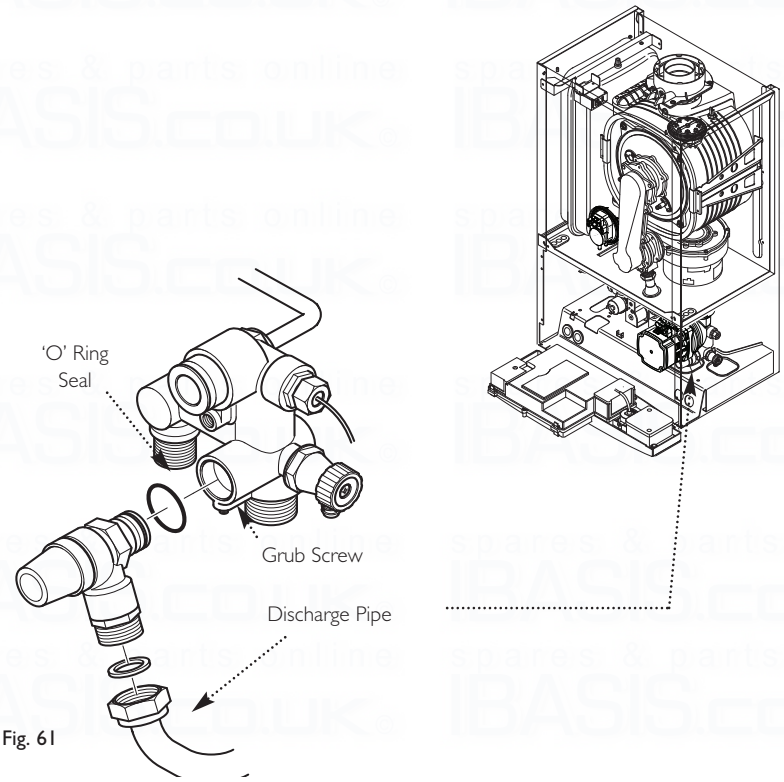


Fig. 61

© Baxi Heating UK Ltd 2016

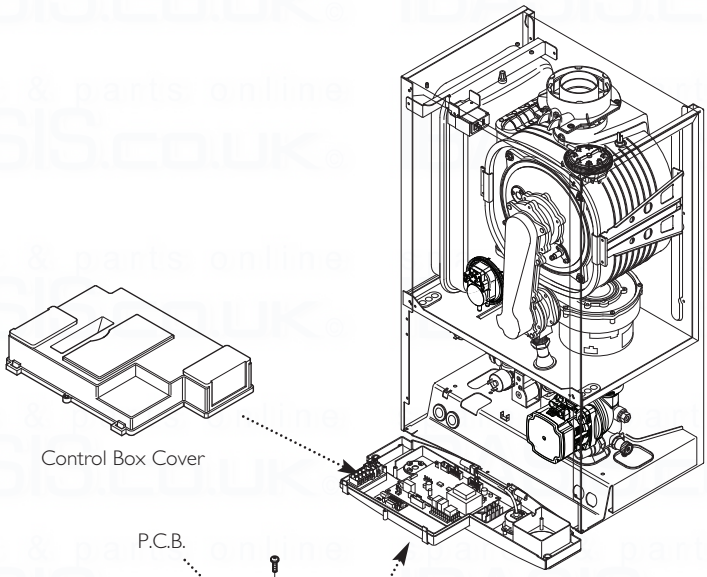


Fig. 62

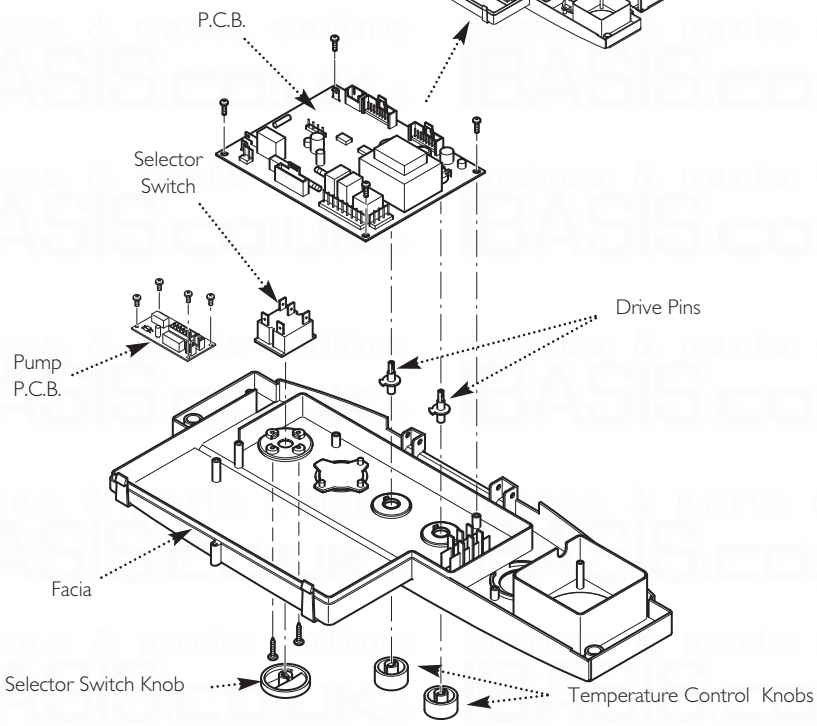


Fig. 63

## 13.19 P.C.B. (Fig. 62)

1. Note the settings of the temperature control knobs, rotate them fully anticlockwise and carefully pull them off the drive pins.

2. Completely undo the screws securing the control box cover and release the cover retaining barbs from their slots. Disengage the rear of the cover from the control box hinge pin (Fig. 82).

3. Note the position of all plugs and wires on the P.C.B. and disconnect them.

4. Undo the securing screws and remove the P.C.B. Transfer the control knob drive pins to the new P.C.B. and turn them fully anticlockwise.

5. Reassemble in reverse order, ensuring that the temperature controllers are reset to their previous positions.

## 13.20 Pump P.C.B. (Fig. 63)

1. Completely undo the screws securing the control box cover and release the cover retaining barbs from their slots. Disengage the rear of the cover from the control box hinge pin (Fig. 82).

2. Note the position of all plugs and wires on the P.C.B. and disconnect them. Undo the securing screws and remove the P.C.B.

3. Reassemble in reverse order.

## 13.21 Selector Switch (Fig. 63)

1. Note the setting of the selector switch knob and carefully pull it off the facia.

2. Completely undo the screws securing the control box cover and release the cover retaining barbs from their slots. Disengage the rear of the cover from the control box hinge pin (Fig. 82).

3. Note the position of the electrical connections and the orientation of the switch. Remove the electrical connections.

4. Remove the screws securing the switch to the facia panel.

5. Fit the new switch, ensuring that it is correctly positioned and reassemble in reverse order.

 © Baxi Heating UK Ltd 2016

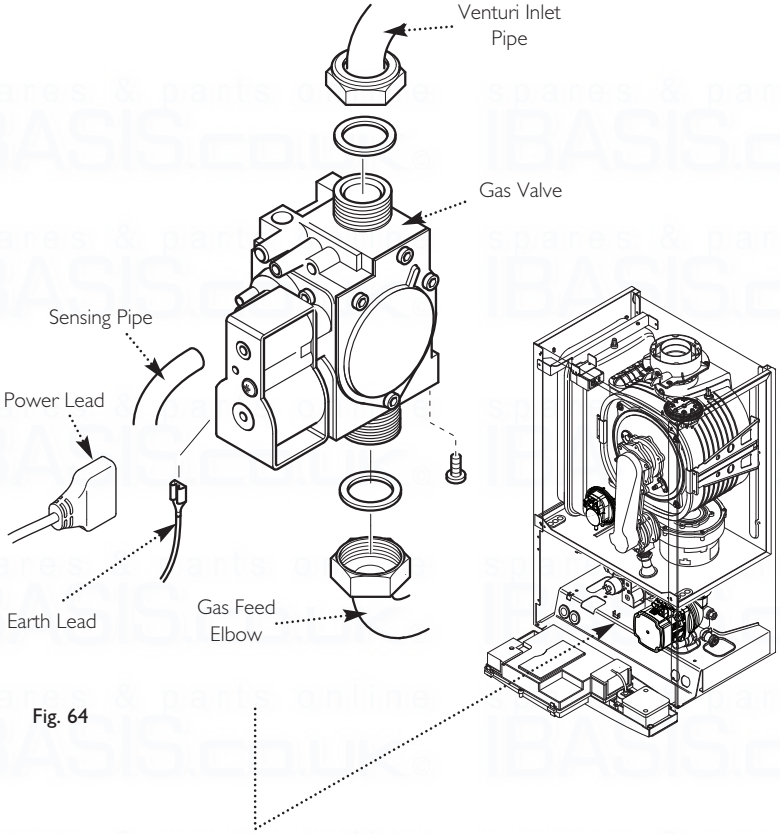


Fig. 64

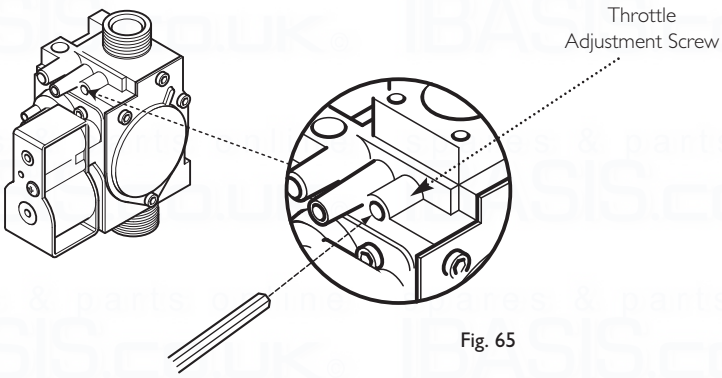


Fig. 65

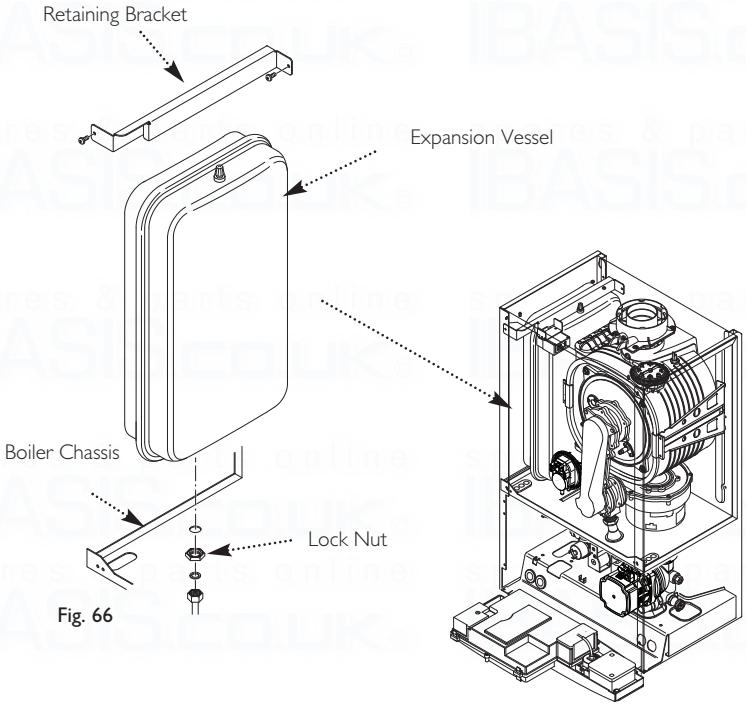


Fig. 66

## 13.22 Gas Valve (Fig. 64)

**IMPORTANT: After replacing the valve the $CO_2$ must be checked and adjusted as detailed in Section 14.0 Setting the Gas Valve. Only change the valve if a suitable calibrated combustion analyser is available, operated by a competent person - see section 12.1.**

1. Turn the gas cock off and undo the nut on the gas feed elbow under the boiler.

2. Remove the screws securing the gas valve to the boiler bottom panel.

3. Pull off the power lead, earth lead and sensing pipe.

4. Undo the nut on the gas pipe at the gas/air inlet and the gas valve. Remove the pipe, taking care not to lose the sealing washers. Remove the valve.

5. Examine the 'O' ring seals, replace if necessary.

6. Reassemble in reverse order, ensuring that all seals are in place.

NOTE: To assist the boiler to light prior to final setting, use a suitable hexagon key to wind out the Throttle adjustment screw until it is flush with the valve body, then turn the screw 4 full turns clockwise (Fig. 65). If the boiler will not light, or the correct $CO_2$ cannot be achieved call Baxi Customer Support 0344 871 1525.

## 13.23 Expansion Vessel (Fig. 66)

1. Drain the primary circuit and undo the nut on the vessel connection pipe.

2. Undo and remove the locknut securing the vessel spigot to the boiler air box.

3. Remove the bracket and vessel from the boiler.

4. Locate the retaining bracket on the upper flange of the vessel and fit to the boiler.

5. Reassemble in reverse order.

© Baxi Heating UK Ltd 2016

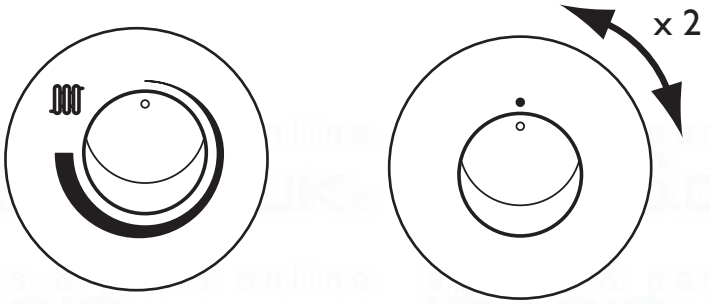


Fig. 67

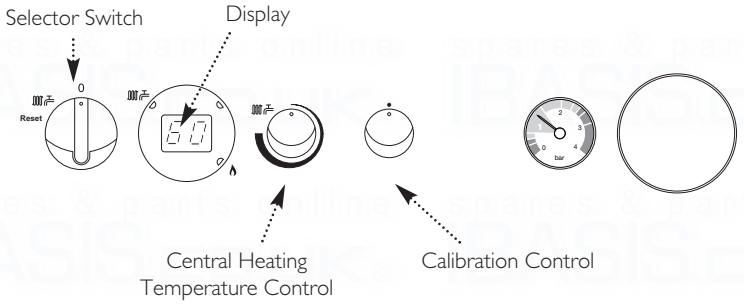


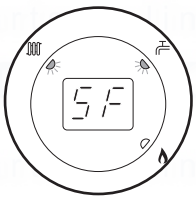

Fig. 68

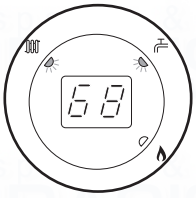

Fig. 69

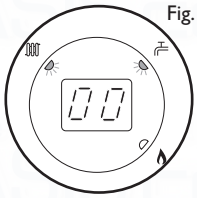

Fig. 70

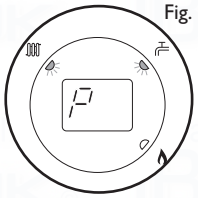

Fig. 71

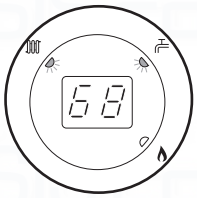

Fig. 72

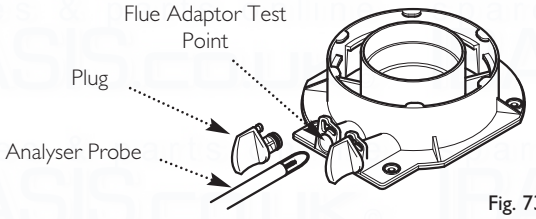


Fig. 73

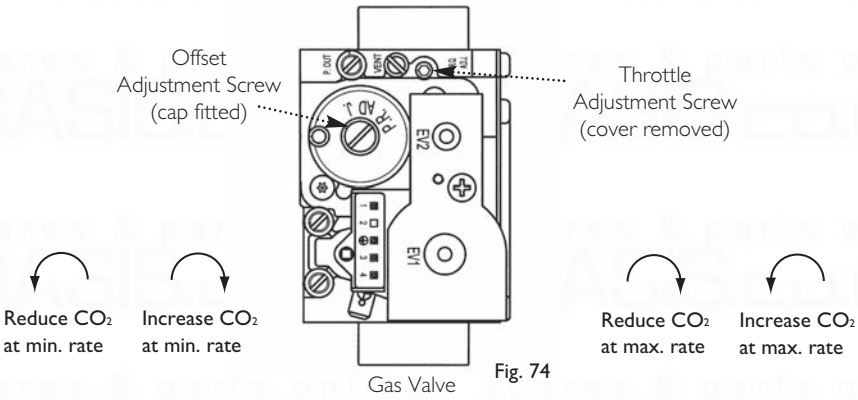


Fig. 74

If the $CO_2$ is reset at minimum rate it must be rechecked at maximum rate again and adjusted if required. If the $CO_2$ is reset at maximum rate it must be rechecked at minimum rate and adjusted if required.

Do not turn the adjustment screws more than 1/8 of a turn at a time. Allow the analyser reading to settle before any further adjustment

## 14.0 Setting the Gas Valve

### 14.1 Setting the Gas Valve ($CO_2$ check)

**IMPORTANT: The $CO_2$ must be only be checked and adjusted to set the valve if a suitable calibrated combustion analyser is available, operated by a competent person - see Section 12.1**

1. The combustion ($CO_2$) may be checked after running the boiler for several minutes. To do this it is necessary to set the boiler to 'Calibration Mode'.

2. **Ensure that all external controls are calling for heat**. The actual current boiler temperature is shown on the display.

3. Turn both control knobs fully anticlockwise, then quickly turn the right hand knob 1/4 clockwise twice and back fully anticlockwise (Fig. 67).

4. The display will now alternate between 'SF' and the current boiler temperature and both green LEDs will flash (Figs. 68 & 69).

5. Turn the left hand knob fully clockwise. As the knob is turned the display will change, indicating the fan speed.

6. The display will show '00', indicating maximum rate, then revert to 'P ' alternating with the current boiler temperature (Figs. 70, 71 & 72).

7. Remove the plug from the flue sampling test point. Insert the analyser probe and allow sufficient time for the reading to settle (Fig. 73).

The $CO_2$ should be 8.7% ± 0.2

8. It is possible to alter the $CO_2$ by adjustment of the gas valve. Remove the plastic cover from the Throttle Adjustment Screw. At maximum rate the Throttle Adjustment Screw should be turned, using a suitable hexagon key, until the correct reading is obtained (Fig. 74). Turning clockwise will reduce the $CO_2$. Anticlockwise will increase the $CO_2$.

9. The $CO_2$ must then be checked at minimum rate. Turn the left hand knob fully anti-clockwise. As the knob is turned the display will change, indicating the fan speed. When the display reads ' 0' the boiler runs at minimum rate.

The $CO_2$ should be 8.4% ± 0.2

10. With the boiler on minimum, the Offset Adjustment Screw must be altered, using a suitable hexagon key, after removing the cap (Fig. 74). Turning anti-clockwise will reduce the $CO_2$. Clockwise will increase the $CO_2$.

11. The 'Calibration Function' is maintained for 20 minutes unless the maximum CH temperature is exceeded. The function can be disabled at any time by turning the right hand knob.

12. **Check the Combustion Performance ($CO/CO_2$ ratio). This must be less than 0.004**.

 © Baxi Heating UK Ltd 2016

## 15.1 Illustrated Wiring Diagram

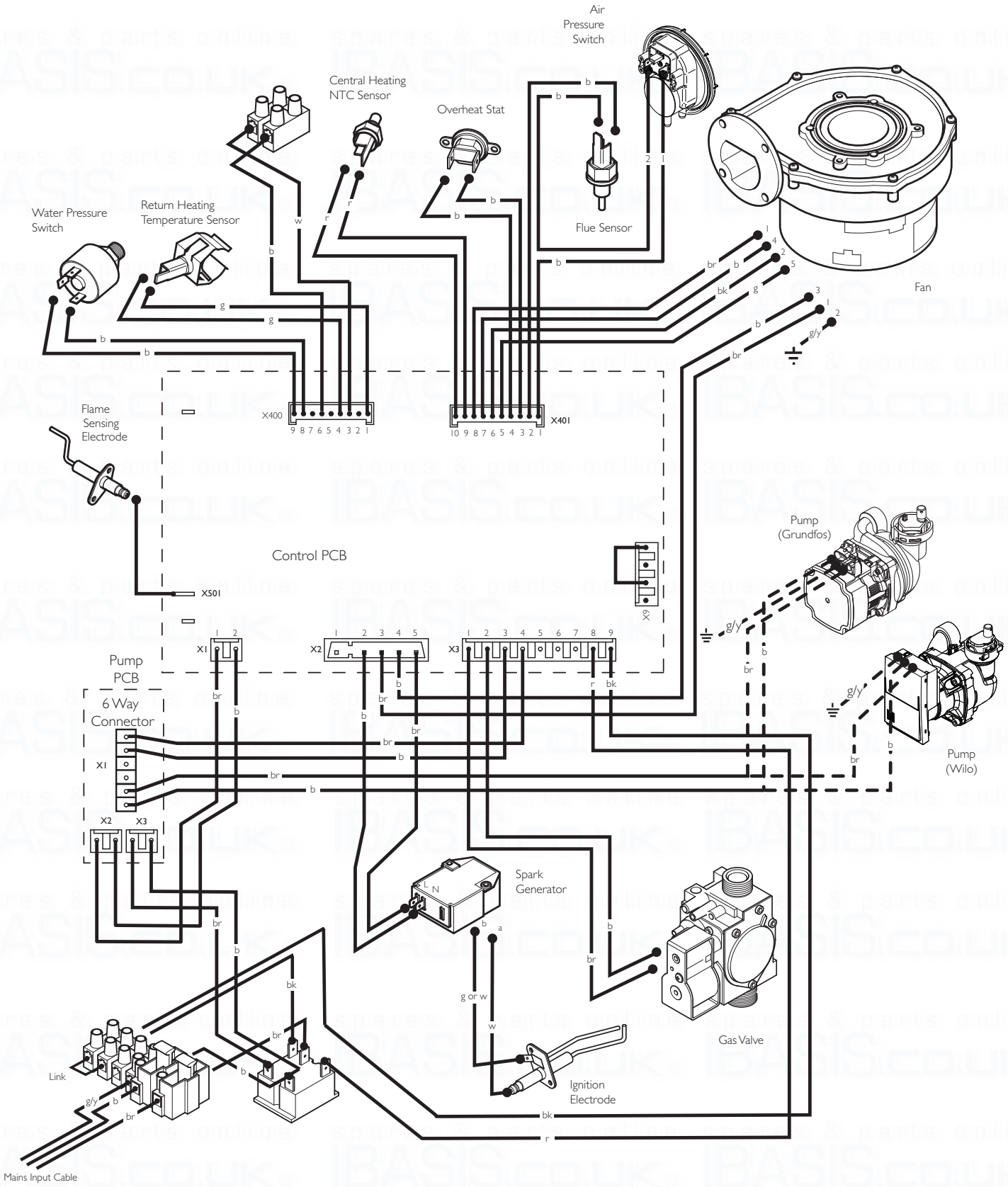


| | | | |
|---|---|---|---|
| br | - brown | g | - green |
| bk | - black | g/y | - green / yellow |
| b | - blue | r | - red |
| w | - white | | |

© Baxi Heating UK Ltd 2016

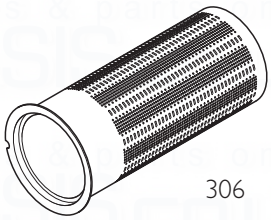
306

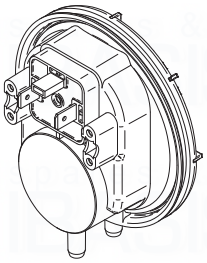
A

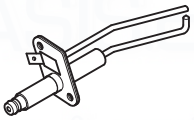
315

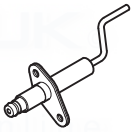
316

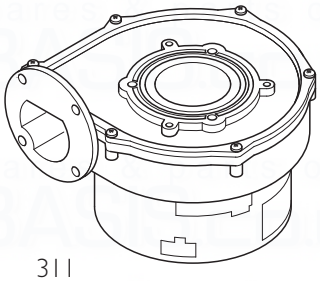
311

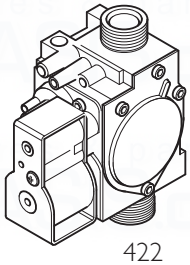
422

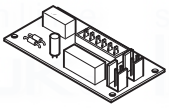
517

419

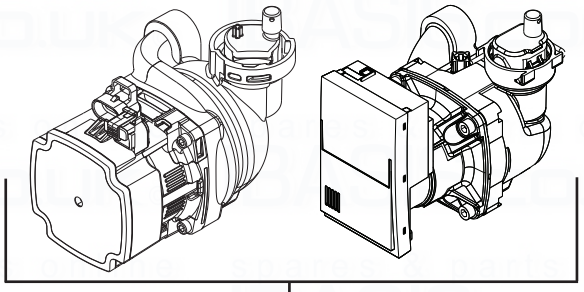
415

302

421

420

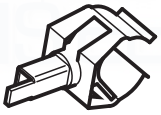
434

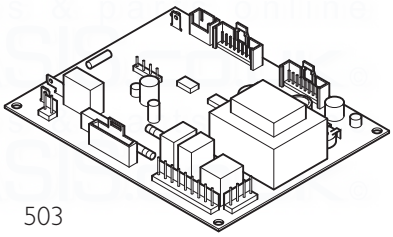
503

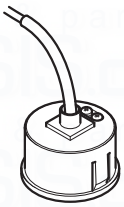
504

## Short Parts List

| Key No. | Description | Manufacturers Part No. |
|---|---|---|
| 302 | Flue Thermostat | 5114747 |
| 306 | Burner (12/15/18/24) | 5122149 |
| | Burner (32) | 5114698 |
| 311 | Fan | 5121447 |
| 315 | Igniter Electrode | 720222801 |
| 316 | Sensing Electrode | 720222901 |
| 415 | Pump | 7654033 |
| 419 | Water Pressure Switch | 5114748 |
| 420 | Overheat Thermostat | 5114729 |
| 421 | NTC Sensor | 5114725 |
| 422 | Gas Valve | 720301001 |
| 434 | NTC Sensor (Return) | 5114726 |
| 503 | | |
| | PCB 12 | 5122455 |
| | PCB 15 | 5122457 |
| | PCB 18 | 5122458 |
| | PCB 24 | 720045201 |
| | PCB 32 | 5122459 |
| 504 | Pressure Gauge | 248090 |
| 517 | Pump PCB | 7222704 |
| A | Air Pressure Switch | 7648326 |

 © Baxi Heating UK Ltd 2016

# 17.0 Fault Finding

## 17.1 Initial Fault Finding Checks

1. Check that gas, water and electrical supplies are available at the boiler.

2. Electrical supply = 230V ~ 50 Hz.

3. CH water system pressurised to 0.5 bar minimum when the boiler is cold.

4. The preferred minimum gas pressure is 20 mbar.

5. Carry out electrical system checks, i.e. Earth Continuity, Resistance to Earth, Short Circuit and Polarity with a suitable meter.

**NOTE:** These checks must be repeated after any servicing or fault finding.

6. Ensure all external controls are calling for heat and check all external and internal fuses. Before any servicing or replacement of parts, ensure the gas and electrical supplies are isolated.

## 17.2 Error Codes

1. If a fault occurs on the boiler an error code may be shown by the facia display.

2. The codes are either two or three digit, preceded by the letter 'E'. For example, code E133 will be displayed by 'E1' alternating with '33'. E20 is shown as 'E' then '20'

E20 indicates faulty components. E28 includes possible faulty components or blockage.

E110 shows overheat of the primary water and E130 overheat of the flue system.

E119 is displayed when the primary water pressure is less than 0.5 bar.

E133 indicates that the gas supply has been interrupted, ignition has failed or the flame has not been detected.

E125 is displayed in either of two situations:-
i) If within 15 seconds of the burner lighting the boiler temperature has not changed by 1°.
ii) If within 10 minutes of the burner lighting the boiler temperature twice exceeds the selected temperature by 30°.
In these instances poor primary circulation is indicated.

3. By turning the selector switch to the 'Reset' position for a minimum of 5 seconds when E110, E130 & E133 are displayed it is possible to relight the boiler.

4. If this does not have any effect, or the codes are displayed regularly further investigation is required.

**NOTE:** When instructed to turn the selector to the reset position turn the selector switch fully anticlockwise against the spring pressure to the reset position and hold for 5 seconds to reset the boiler.

Table Of Error Codes

| | |
|---|---|
| E20 | Central Heating NTC Fault |
| E28 | Flue NTC Fault, Air Pressure Switch Fault, Blocked Flue, Blocked Condensate or wirinf Fault |
| E110 | Safety Thermostat Operated |
| E119 | Water Pressure Switch Not Operated |
| E125 | Circulation Fault (Primary Circuit) |
| E130 | Flue NTC Operated |
| E133 | Interruption Of Gas Supply or Flame Failure |
| E160 | Fan or Fan Wiring Fault |
| E193 | Pre-Circulation Fault |

Testing Air Pressure Switch

To check the Air Pressure Switch is operating correctly:-
During normal operation or standby briefly apply light suction to the negative pressure spigot (P2). Error Code "E28" should display whilst suction is applied, and then disappear when the switch is remade (removal of suction).

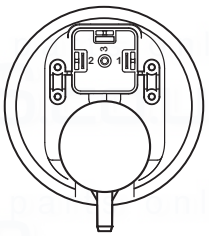


Connect to terminals 1 & 2 (3 not used)

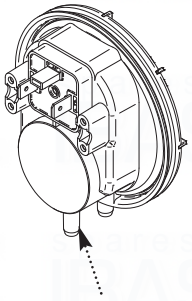

P2 - Negative Pressure

© Baxi Heating UK Ltd 2016

Refer to Section 16.0 "Illustrated Wiring Diagram" for position of terminals and components

**Central Heating -** Follow operational sequence

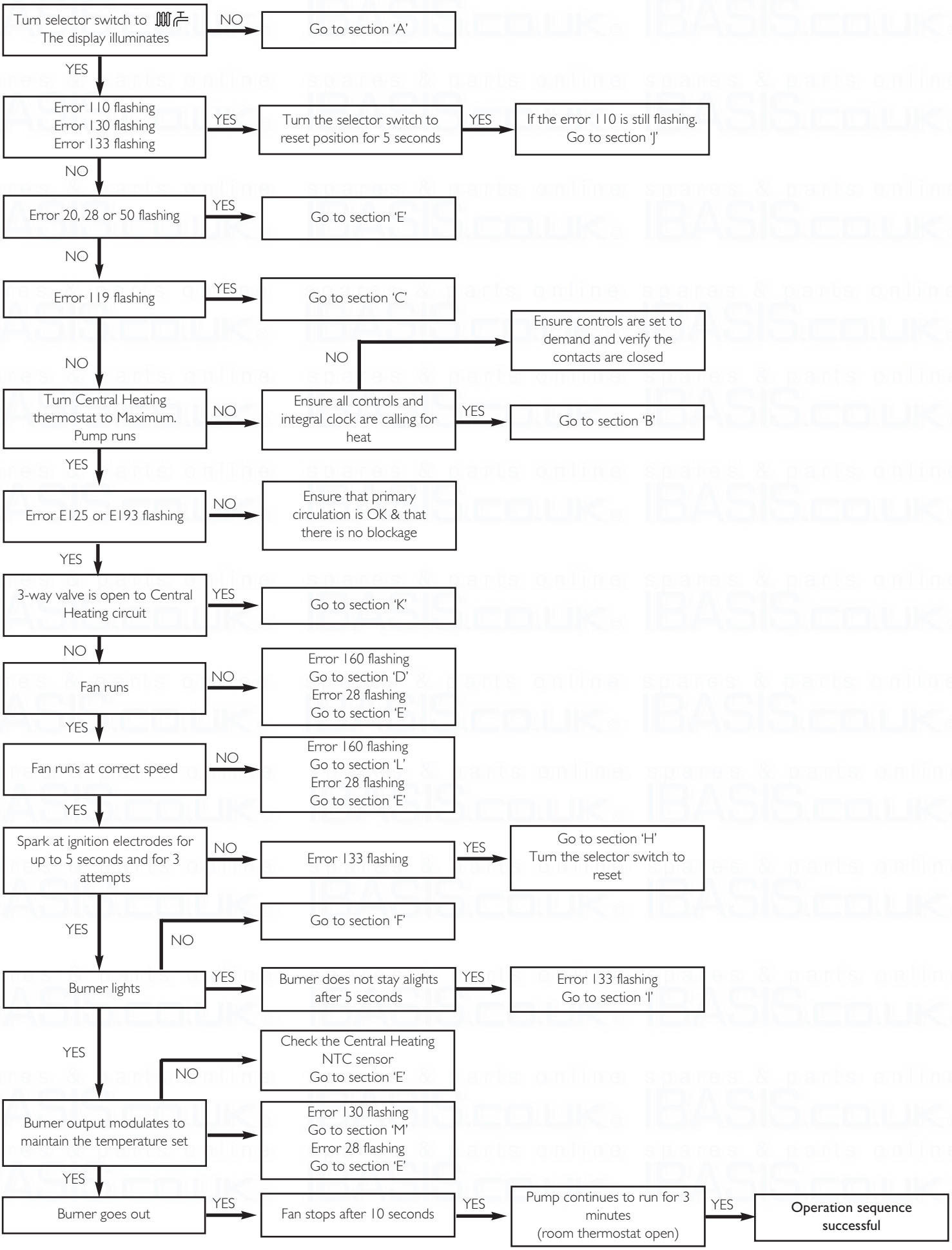


 © Baxi Heating UK Ltd 2016

## Fault Finding Solutions Sections

### A

Is there 230V at:

1. Main terminals L and N — NO → Check electrical supply
2. Main terminal fuse — NO → Replace fuse
3. PCB - X1 connector terminals 1,2 — NO → Check wiring

Display illuminated — NO → Replace PCB

### B

Is there 230V at:

1. X3 Connection Pump PCB — NO → Check incoming wiring
   - YES ↓
   - X2 Connection Pump PCB — NO → Replace Pump PCB
   - YES ↓
   - X1 Control PCB — NO → Check wiring
   - YES ↓
   - X3 Control PCB, T3, T4 — NO → Replace Control PCB
   - YES ↓
   - X1 Pump PCB — NO → Replace Pump PCB
   - YES ↓
   - Replace Pump

### C

1. CH system pressure less than 0.5 bar — YES → Re-pressurise system
   - NO → Check connection water pressure switch terminal COM - NO and PCB connector X400 terminals 3,4 — YES → Replace water pressure switch
2. Check the tap of the automatic air vent is opened — NO → Open the automatic air vent

### D

1. Fan connections correct at fan. PCB - X2 connector, is 230V AC across terminals 5 & 7 — YES → Fan jammed or faulty winding — YES → Replace fan
   - NO → Replace PCB

© Baxi Heating UK Ltd 2016

## E

Temperature sensors faulty.
Cold resistance approximately
10kΩ @ 25° C (DHW and CH sensors)
20kΩ @ 25° C (Flue sensor)
(resistance reduces with increase in temp.)
→ NO → Replace sensor

Air Pressure Switch faulty.
Check for continuity across terminals 1 & 2
→ NO → Replace switch

Flue blocked or damaged
→ YES → Unblock or repair flue

Condensate trap or pipework blocked
→ YES → Unblock

## F

1. Check and correct the connection of the tube between the venturi and gas valve

2. Gas at burner
→ NO → Ensure gas is on and purged
→ PCB - X3 connector is 230V AC across terminals 1 & 2
→ YES → Replace gas valve
→ NO → Replace PCB

## G

Check and correct if necessary
1. Ignition electrode and lead
2. Electrode connection
3. Spark gap and position
→ YES → Voltage at PCB - X2 connector is at least 100V DC across terminals 2 & 5 (Note: from multimeter connect 'common' to 2 & 'volt' to 5) Check wiring
→ NO → Replace PCB
→ YES → Replace igniter

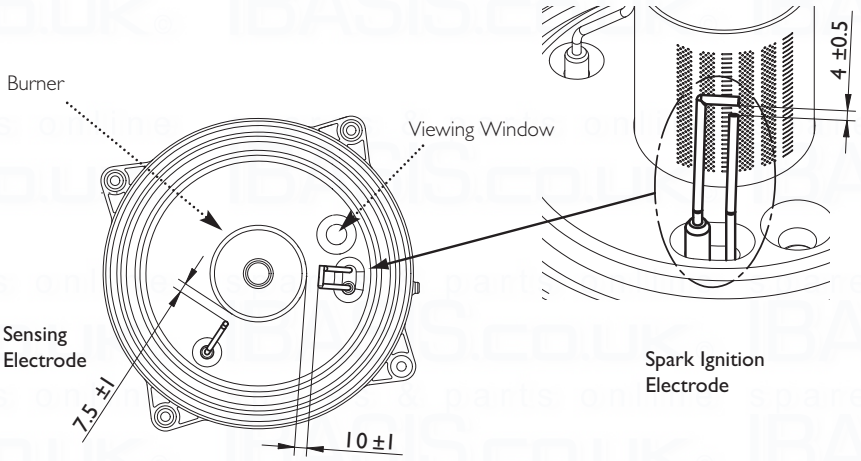


Electrode Position

 © Baxi Heating UK Ltd 2016

## H

1. Check supply pressure at the gas valve:
   Minimum 17 mbar

2. Check and correct if necessary
   1. The mechanical set of the gas valve (CO2 values - see instruction)
   2. Flame sensing electrode and lead connections
   3. Flame sensing electrode position

   Flame current should be more than 0.5 μ A

   YES → Replace PCB

   NO → Replace flame sensing electrode

## I

1. Overheat thermostat operated or faulty, i.e. continuity across thermostat terminals

   NO → Allow to cool. Continuity across thermostat terminals more than 1.5 ohm

   YES → Replace safety thermostat

   YES → Replace PCB

## J

1. Fan connections correct at fan.
   PCB - X401 connector terminals 5,6,7 & 8

   YES → Replace fan

## K

1. Temperature sensors faulty.
   Cold resistance approximately
   10kΩ @ 25° C (CH sensor)
   20kΩ @ 25° C (Flue sensor)
   (resistance reduces with increase in temp.)

   NO → Replace sensor

2. If pump is running the heat exchanger could be obstructed

   YES → Replace heat exchanger

© Baxi Heating UK Ltd 2016

# GAS BOILER SYSTEM COMMISSIONING CHECKLIST

**This Commissioning Checklist is to be completed in full by the competent person who commissioned the boiler as a means of demonstrating compliance with the appropriate Building Regulations and then handed to the customer to keep for future reference.**

Failure to install and commission according to the manufacturer's instructions and complete this Benchmark Commissioning Checklist will invalidate the warranty. This does not affect the customer's statutory rights.

| | |
|---|---|
| Customer name: | Telephone number: |
| Address: | |
| Boiler make and model: | |
| Boiler serial number: | |
| Commissioned by (PRINT NAME): | Gas Safe register number: |
| Company name: | Telephone number: |
| Company address: | |
| | Commissioning date: |
| **To be completed by the customer on receipt of a Building Regulations Compliance Certificate*** | |
| Building Regulations Notification Number (if applicable): | |

| **CONTROLS** (tick the appropriate boxes) | | | | |
|---|---|---|---|---|
| Time and temperature control to heating | Room thermostat and programmer/timer | | Programmable room thermostat | |
| | Load/weather compensation | | Optimum start control | |
| Time and temperature control to hot water | Cylinder thermostat and programmer/timer | | Combination Boiler | |
| Heating zone valves | Fitted | | Not required | |
| Hot water zone valves | Fitted | | Not required | |
| Thermostatic radiator valves | Fitted | | Not required | |
| Automatic bypass to system | Fitted | | Not required | |
| Boiler interlock | | | Provided | |

| **ALL SYSTEMS** | | | | |
|---|---|---|---|---|
| The system has been flushed and cleaned in accordance with BS7593 and boiler manufacturer's instructions | | | Yes | |
| What system cleaner was used? | | | | |
| What inhibitor was used? | | Quantity | litres | |
| Has a primary water system filter been installed? | Yes | | No | |

| **CENTRAL HEATING MODE** measure and record: | | | |
|---|---|---|---|
| Gas rate | m³/hr | **OR** | ft³/hr |
| Burner operating pressure (if applicable) | mbar | **OR** Gas inlet pressure | mbar |
| Central heating flow temperature | | | °C |
| Central heating return temperature | | | °C |

| **COMBINATION BOILERS ONLY** | | | | |
|---|---|---|---|---|
| Is the installation in a hard water area (above 200ppm)? | Yes | | No | |
| If yes, and if required by the manufacturer, has a water scale reducer been fitted? | Yes | | No | |
| What type of scale reducer has been fitted? | | | | |

| **DOMESTIC HOT WATER MODE** Measure and Record: | | | |
|---|---|---|---|
| Gas rate | m³/hr | **OR** | ft³/hr |
| Burner operating pressure (at maximum rate) | mbar | **OR** Gas inlet pressure at maximum rate | mbar |
| Cold water inlet temperature | | | °C |
| Hot water has been checked at all outlets | Yes | Temperature | °C |
| Water flow rate | | | l/min |

| **CONDENSING BOILERS ONLY** | | |
|---|---|---|
| The condensate drain has been installed in accordance with the manufacturer's instructions and/or BS5546/BS6798 | Yes | |

| **ALL INSTALLATIONS** | | | | | | |
|---|---|---|---|---|---|---|
| Record the following: | At max. rate: | CO | ppm | **AND** | $CO/CO_2$ | Ratio |
| | At min. rate: (where possible) | CO | ppm | **AND** | $CO/CO_2$ | Ratio |
| The heating and hot water system complies with the appropriate Building Regulations | | | | | Yes | |
| The boiler and associated products have been installed and commissioned in accordance with the manufacturer's instructions | | | | | Yes | |
| The operation of the boiler and system controls have been demonstrated to and understood by the customer | | | | | Yes | |
| The manufacturer's literature, including Benchmark Checklist and Service Record, has been explained and left with the customer | | | | | Yes | |

| |
|---|
| Commissioning Engineer's Signature |
| Customer's Signature |
| (To confirm satisfactory demonstration and receipt of manufacturer's literature) |

*All installations in England and Wales must be notified to Local Authority Building Control (LABC) either directly or through a Competent Persons Scheme. A Building Regulations Compliance Certificate will then be issued to the customer.

benchmark COLLECTIVE MARK
THE MARK OF QUALITY FOR THE INSTALLATION, COMMISSIONING AND SERVICING OF DOMESTIC HEATING AND HOT WATER SYSTEMS


© Heating and Hotwater Industry Council (HHIC)

## SERVICE RECORD

**It is recommended that your heating system is serviced regularly and that the appropriate Service Interval Record is completed.**

**Service Provider**

Before completing the appropriate Service Record below, please ensure you have carried out the service as described in the manufacturer's instructions. Always use the manufacturer's specified spare part when replacing controls.

| SERVICE 01 | | | | | Date: |
|---|---|---|---|---|---|
| Engineer name: | | | | | |
| Company name: | | | | | |
| Telephone No: | | | | | |
| Gas safe register No: | | | | | |
| Record: | At max. rate: | CO | ppm | **AND** | $CO_2$ % |
| | At min. rate: (Where Possible) | CO | ppm | **AND** | $CO_2$ % |
| Comments: | | | | | |
| Signature | | | | | |

| SERVICE 02 | | | | | Date: |
|---|---|---|---|---|---|
| Engineer name: | | | | | |
| Company name: | | | | | |
| Telephone No: | | | | | |
| Gas safe register No: | | | | | |
| Record: | At max. rate: | CO | ppm | **AND** | $CO_2$ % |
| | At min. rate: (Where Possible) | CO | ppm | **AND** | $CO_2$ % |
| Comments: | | | | | |
| Signature | | | | | |

| SERVICE 03 | | | | | Date: |
|---|---|---|---|---|---|
| Engineer name: | | | | | |
| Company name: | | | | | |
| Telephone No: | | | | | |
| Gas safe register No: | | | | | |
| Record: | At max. rate: | CO | ppm | **AND** | $CO_2$ % |
| | At min. rate: (Where Possible) | CO | ppm | **AND** | $CO_2$ % |
| Comments: | | | | | |
| Signature | | | | | |

| SERVICE 04 | | | | | Date: |
|---|---|---|---|---|---|
| Engineer name: | | | | | |
| Company name: | | | | | |
| Telephone No: | | | | | |
| Gas safe register No: | | | | | |
| Record: | At max. rate: | CO | ppm | **AND** | $CO_2$ % |
| | At min. rate: (Where Possible) | CO | ppm | **AND** | $CO_2$ % |
| Comments: | | | | | |
| Signature | | | | | |

| SERVICE 05 | | | | | Date: |
|---|---|---|---|---|---|
| Engineer name: | | | | | |
| Company name: | | | | | |
| Telephone No: | | | | | |
| Gas safe register No: | | | | | |
| Record: | At max. rate: | CO | ppm | **AND** | $CO_2$ % |
| | At min. rate: (Where Possible) | CO | ppm | **AND** | $CO_2$ % |
| Comments: | | | | | |
| Signature | | | | | |

| SERVICE 06 | | | | | Date: |
|---|---|---|---|---|---|
| Engineer name: | | | | | |
| Company name: | | | | | |
| Telephone No: | | | | | |
| Gas safe register No: | | | | | |
| Record: | At max. rate: | CO | ppm | **AND** | $CO_2$ % |
| | At min. rate: (Where Possible) | CO | ppm | **AND** | $CO_2$ % |
| Comments: | | | | | |
| Signature | | | | | |

| SERVICE 07 | | | | | Date: |
|---|---|---|---|---|---|
| Engineer name: | | | | | |
| Company name: | | | | | |
| Telephone No: | | | | | |
| Gas safe register No: | | | | | |
| Record: | At max. rate: | CO | ppm | **AND** | $CO_2$ % |
| | At min. rate: (Where Possible) | CO | ppm | **AND** | $CO_2$ % |
| Comments: | | | | | |
| Signature | | | | | |

| SERVICE 08 | | | | | Date: |
|---|---|---|---|---|---|
| Engineer name: | | | | | |
| Company name: | | | | | |
| Telephone No: | | | | | |
| Gas safe register No: | | | | | |
| Record: | At max. rate: | CO | ppm | **AND** | $CO_2$ % |
| | At min. rate: (Where Possible) | CO | ppm | **AND** | $CO_2$ % |
| Comments: | | | | | |
| Signature | | | | | |

| SERVICE 09 | | | | | Date: |
|---|---|---|---|---|---|
| Engineer name: | | | | | |
| Company name: | | | | | |
| Telephone No: | | | | | |
| Gas safe register No: | | | | | |
| Record: | At max. rate: | CO | ppm | **AND** | $CO_2$ % |
| | At min. rate: (Where Possible) | CO | ppm | **AND** | $CO_2$ % |
| Comments: | | | | | |
| Signature | | | | | |

| SERVICE 10 | | | | | Date: |
|---|---|---|---|---|---|
| Engineer name: | | | | | |
| Company name: | | | | | |
| Telephone No: | | | | | |
| Gas safe register No: | | | | | |
| Record: | At max. rate: | CO | ppm | **AND** | $CO_2$ % |
| | At min. rate: (Where Possible) | CO | ppm | **AND** | $CO_2$ % |
| Comments: | | | | | |
| Signature | | | | | |

*All installations in England and Wales must be notified to Local Authority Building Control (LABC) either directly or through a Competent Persons Scheme. A Building Regulations Compliance Certificate will then be issued to the customer.

benchmark COLLECTIVE MARK
THE MARK OF QUALITY FOR THE INSTALLATION, COMMISSIONING AND SERVICING OF DOMESTIC HEATING AND HOT WATER SYSTEMS



© Heating and Hotwater Industry Council (HHIC)

## Baxi Customer Support

**0344 871 1525**

**Opening hours**

Monday - Friday, 8.00am-6.00pm

Weekends and Bank Holidays, 8.30am-2.00pm

Please note calls may be recorded for training and monitoring purposes

**baxi.co.uk**

**Register now to activate your warranty:**

**www.baxi.co.uk/registration**

**For the warranty to be maintained, please make sure...**

1. Benchmark checklist is completed
2. Warranty is registered with Baxi
3. The boiler has an annual service

For full terms and conditions, visit www.baxi.co.uk/terms. Failure to adhere to terms and conditions will void your manufacturer's warranty.

Baxi
Brooks House,
Coventry Road,
Warwick, CV34 4LL

0086

benchmark COLLECTIVE MARK
THE MARK OF QUALITY FOR THE INSTALLATION, COMMISSIONING AND SERVICING OF DOMESTIC HEATING AND HOT WATER SYSTEMS

Please ensure the boiler is installed in accordance with these installation instructions and that you adhere to the Building Regulations.

e&oe
All descriptions and illustrations provided in this document have been carefully prepared but we reserve the right to make changes and improvements in our products which may affect the accuracy of the information contained in this leaflet. All goods are sold subject to our standard Conditions of Sale which are available on request.

part of BAXI

7654291 - 01 (02/16)