United Kingdom
en

POTTERTON

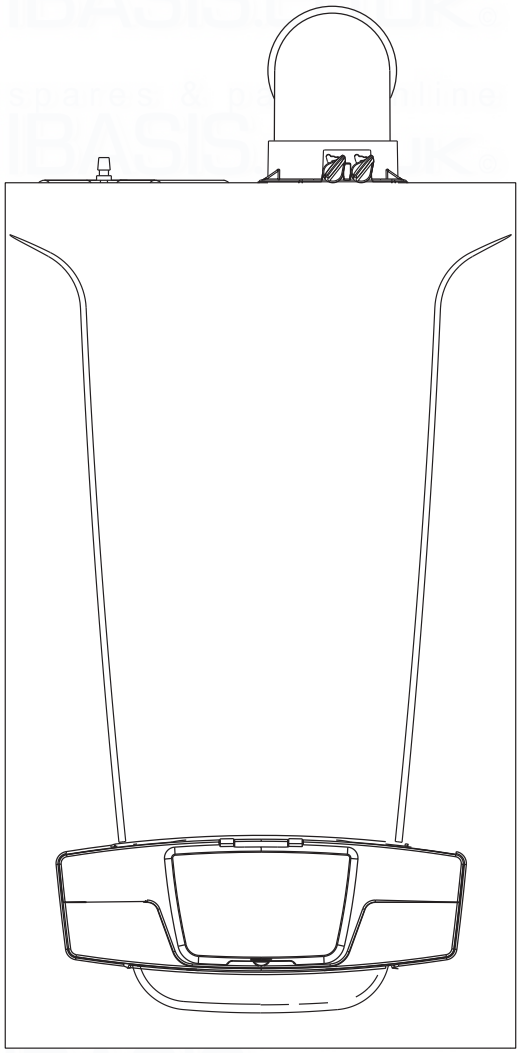

Installation and Service Manual

Condensing Combination Boiler

Promax Ultra Combi
24 - 28 - 33 - 40

These instructions include the Benchmark Commissioning Checklist
and should be left with the user for safe keeping.

spares & parts online IBASIS.CO.UK

Model Range

Potterton Promax Ultra 24 Combi ErP
G.C.N° 47-393-54
Potterton Promax Ultra 28 Combi ErP
G.C.N° 47-393-55
Potterton Promax Ultra 33 Combi ErP
G.C.N° 47-393-56
Potterton Promax Ultra 40 Combi ErP
G.C.N° 47-393-57

The Benchmark Scheme

Benchmark places responsibilities on both manufacturers and installers. The purpose is to ensure that customers are provided with the correct equipment for their needs, that it is installed, commissioned and serviced in accordance with the manufacturer's instructions by competent persons and that it meets the requirements of the appropriate Building Regulations. The Benchmark Checklist can be used to demonstrate compliance with Building Regulations and should be provided to the customer for future reference.

Installers are required to carry out installation, commissioning and servicing work in accordance with the Benchmark Code of Practice which is available from the Heating and Hotwater Industry Council who manage and promote the Scheme. Visit **www.centralheating.co.uk** for more information.

© Baxi Heating UK Ltd 2016 All rights reserved. No part of this publication may be reproduced or transmitted in any form or by any means, or stored in any retrieval system of any nature (including in any database), in each case whether electronic, mechanical, recording or otherwise, without the prior written permission of the copyright owner, except for permitted fair dealing under Copyrights, Designs and Patents Act 1988.

Applications for the copyright owner's permission to reproduce or make other use of any part of this publication should be made, giving details of the proposed use, to the following address:

The Company Secretary, Baxi Heating UK Limited,
Brooks House, Coventry Road, Warwick. CV34 4LL

Full acknowledgement of author and source must be given.

WARNING: Any person who does any unauthorised act in relation to a copyright work may be liable to criminal prosecution and civil claims for damages.

IPX5D

CE 0085

energy saving trust endorsed product

WRAS APPROVED PRODUCT

benchmark COLLECTIVE MARK
THE MARK OF QUALITY FOR THE INSTALLATION, COMMISSIONING AND SERVICING OF DOMESTIC HEATING AND HOT WATER SYSTEMS

BSI™
ISO 9001
FM 00866

Building Regulations and the Benchmark Commissioning Checklist

Building Regulations (England & Wales) require notification of the installation of a heating appliance to the relevant Local Authority Building Control Department. This can be achieved via a Competent Persons Self Certification Scheme as an option to notifying the Local Authority directly.

The Health & Safety Executive operates the 'Gas Safe Register', a self-certification scheme for gas heating appliances.

These arrangements represent a change from the situation whereby compliance with Building Regulations was accepted as being demonstrated by completion of the Benchmark Logbook (which was then left on site with the customer).

With the introduction of Self Certification Schemes, the Benchmark Logbook is being withdrawn. However, a similar document in the form of a commissioning checklist and service interval record is incorporated at the back of these instructions.

This company is a member of the Benchmark initiative and fully supports the aims of the programme. Its aim is to improve the standards of installation and commissioning of central heating systems in the UK and to encourage the regular servicing of all central heating systems to ensure safety and efficiency.

Building Regulations require that installations should comply with manufacturer's instructions. It is therefore important that the commissioning checklist is completed by the installer. The relevant section of Building Regulations only relates to dwellings. Therefore the checklist only applies if the appliance is being installed in a dwelling or some related structure.

The flowchart opposite gives guidance for installers on the process necessary to ensure compliance with Building Regulations.

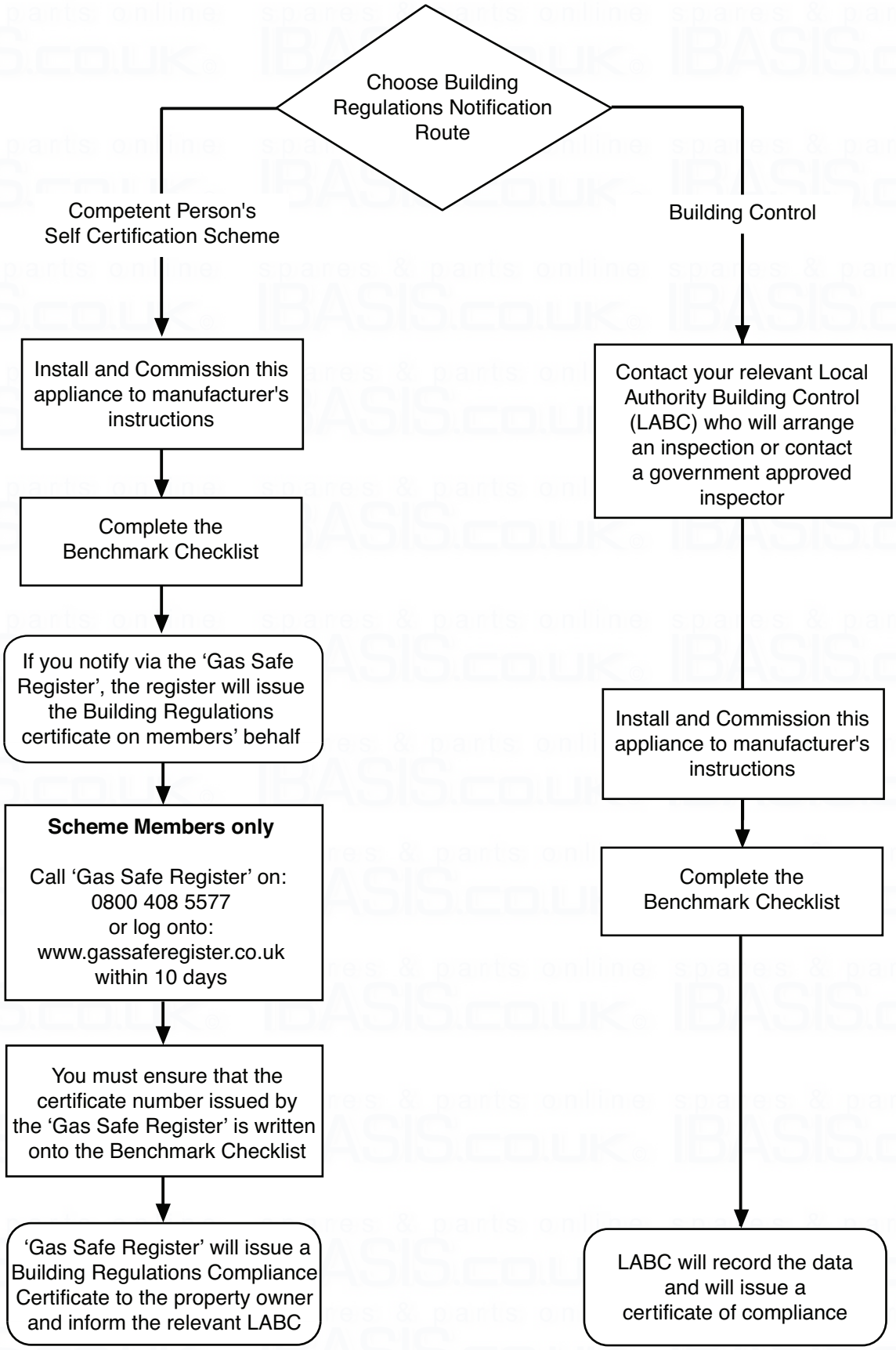

© Baxi Heating UK Ltd 2016

Legislation

IMPORTANT - Installation, Commissioning, Service & Repair

This appliance must be installed in accordance with the manufacturer's instructions and the regulations in force. Read the instructions fully before installing or using the appliance.

In GB, this must be carried out by a competent person as stated in the Gas Safety (Installation & Use) Regulations.

Definition of competence: A person who works for a Gas Safe registered company and holding current certificates in the relevant ACS modules, is deemed competent.

In IE, this must be carried out by a competent person as stated in I.S. 813 "Domestic Gas Installations".

The addition of anything that may interfere with the normal operation of the appliance without express written permission from the manufacturer or his agent could invalidate the appliance warranty. In GB this could also infringe the Gas Safety (Installation and Use) Regulations.

Warning - Check the information on the data plate is compatible with local supply conditions.

All Gas Safe registered engineers carry an ID card with their licence number and a photograph. You can check your engineer is registered by telephoning 0800 408 5500 or online at www.gassaferegister.co.uk

This company declares that no substances harmful to health are contained in the appliance or used during appliance manufacture.

The appliance is suitable only for installation in GB and IE and should be installed in accordance with the rules in force, and only used in a suitably ventilated location.

In GB, the installation must be carried out by a Gas Safe Registered Installer. It must be carried out in accordance with the relevant requirements of the:

- Gas Safety (Installation & Use) Regulations.
- The appropriate Building Regulations either The Building Regulations, The Building Regulations (Scotland), Building Regulations (Northern Ireland).
- The Water Fittings Regulations or Water Byelaws in Scotland.
- The Current I.E.E. Wiring Regulations.

Where no specific instructions are given, reference should be made to the relevant British Standard Code of Practice.

In IE, the installation must be carried out by a competent Person and installed in accordance with the current edition of I.S. 813 'Domestic Gas Installations', the current Building Regulations and reference should be made to the current ETCI rules for electrical installation.

All systems must be thoroughly flushed and treated with inhibitor (see section 6.2).

Homologations

CE Marking

EC - Declaration of Conformity

Baxi Heating UK Limited being the manufacturer / distributor within the European Economic Area of the following

Potterton Promax Ultra 24 - 28 - 33 - 40 Combi ErP

declare that the above is in conformity with the provisions of the Council Directive

2009/142/EC 92/42/EEC 2004/108/EC 2006/95/EC
2009/125/EC 2010/30/EU

and has been subject to the following conformity procedures laid down in

Annex 2 - Article 3 of 2009/142/EC

under the supervision of the British Standards Institution, a Notified Body authorized by the United Kingdom Competent Authority, and carrying the Notified Body Number 0086.

Type test for purpose of Regulation 5 certified by:
Notified Body 0085.

Product/Production certified by:
Notified Body 0086.

For GB/IE only.

Codes of Practice - refer to the most recent version

In GB the following Codes of Practice apply:

Standard	Scope
BS 6891	Gas Installation.
BS 5482 Part 1	Butane & Propane Gas Installation
BS 5546	Installation of hot water supplies for domestic purposes.
BS EN 12828	Heating systems in buildings.
BS EN 12831	Heating systems in buildings - Calculation of load.
BS EN 14336	Installation & commissioning of water based heating systems.
BS 6798	Installation of gas fired hot water boilers.
BS 5440 Part 1	Flues.
BS 5440 Part 2	Ventilation.
BS 7074	Expansion vessels and ancillary equipment for sealed water systems.
BS 7593	Treatment of water in domestic hot water central heating systems.

In IE the following Codes of Practice apply:

Standard	Scope
I.S. 813	Domestic Gas Installations.
The following standards give valuable additional information;	
BS 5546	Installation of hot water supplies for domestic purposes.
BS EN 12828	Heating systems in buildings.
BS EN 12831	Heating systems in buildings - Calculation of load.
BS EN 14336	Installation & commissioning of water based heating systems.
BS 7074	Expansion vessels and ancillary equipment for sealed water systems.
BS 7593	Treatment of water in domestic hot water central heating systems.

© Baxi Heating UK Ltd 2016

General

The following advice should be adhered to, from when first handling the boiler to the final stages of installation, and also during maintenance.

Most injuries as a result of inappropriate handling and lifting are to the back, but all other parts of the body are vulnerable, particularly shoulders, arms and hands. Health & Safety is the responsibility of EVERYONE.

There is no 'safe' limit for one man - each person has different capabilities. The boiler should be handled and lifted by TWO PEOPLE.

Do not handle or lift unless you feel physically able.

Wear appropriate Personal Protection Equipment e.g. protective gloves, safety footwear etc.

Preparation

Co-ordinate movements - know where, and when, you are both going.

Minimise the number of times needed to move the boiler - plan ahead.

Always ensure when handling or lifting the route is clear and unobstructed. If possible avoid steps, wet or slippery surfaces, unlit areas etc. and take special care on ladders/into lofts.

Technique

When handling or lifting always use safe techniques - keep your back straight, bend your knees. Don't twist - move your feet, avoid bending forwards and sideways and keep the load as close to your body as possible.

Where possible transport the boiler using a sack truck or other suitable trolley.

Always grip the boiler firmly, and before lifting feel where the weight is concentrated to establish the centre of gravity, repositioning yourself as necessary. See the 'Installation' section of these instructions for recommended lift points.

Remember

The circumstances of each installation are different. Always asses the risks associated with handling and lifting according to the individual conditions.

If at any time when installing the boiler you feel that you may have injured yourself STOP !!
DO NOT 'work through' the pain - you may cause further injury.

IF IN ANY DOUBT DO NOT HANDLE OR LIFT THE BOILER - OBTAIN ADVICE OR ASSISTANCE BEFORE PROCEEDING !!

© Baxi Heating UK Ltd 2016

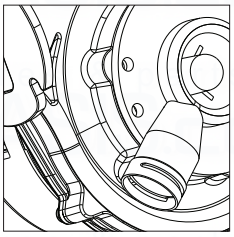

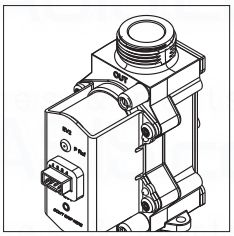

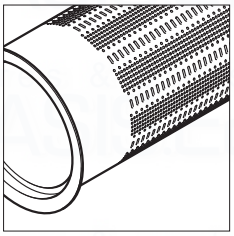

CONTENTS

Section		Page
1.0	Introduction	7
2.0	General Layout	8
3.0	Appliance Operation	9
4.0	Technical Data	10
5.0	Dimensions and Fixings	12
6.0	System Details	13
7.0	Site Requirements	16
8.0	Flue Options	21
9.0	Installation	23
10.0	Commissioning	29
11.0	Completion	33
12.0	Servicing	34
13.0	Changing Components	36
14.0	Combustion & Calibration	44
15.0	Electrical	45
16.0	Short Parts List	46
17.0	Fault Finding	47
18.0	External Low Voltage Controls	53
19.0	Notes	56
	Benchmark Checklist	58

© Baxi Heating UK Ltd 2016

1.0 Introduction

1.1 Description

1. The Potterton Promax Ultra Combi Range are fully automatic gas fired wall mounted condensing combination boilers. It is room sealed and fan assisted, and will serve central heating and mains fed domestic hot water.

2. The boiler is set to give a maximum output of :-

24 models -	24 kW DHW
	21.2 kW CH Pnc (Condensing)
28 models -	28 kW DHW
	25.3 kW CH Pnc (Condensing)
33 models -	33 kW DHW
	29.6 kW CH Pnc (Condensing)
40 models -	40 kW DHW
	33.8 kW CH Pnc (Condensing)

3. The boiler is factory set for use on Natural Gas (G20). It can be converted to operate on Propane (G31) - see Section 10.1.11 'Gas Type Check'.

4. The boiler is suitable for use only on fully pumped sealed heating systems. Priority is given to domestic hot water.

5. The boiler data badge gives details of the model, serial number and Gas Council number and is situated on the inner door panel. It is visible when the case front panel is removed (Fig. 2).

6. The boiler model, serial number and Gas Council number are also shown on the information label behind the boiler control flap (Fig. 1). This is for user reference.

7. The boiler is intended to be installed in residential / commercial / light industrial E.M.C. environments on a governed meter supply only.

8. The boiler must be installed with one of the purpose designed flues such as one of the standard horizontal telescopic flue kits detailed in the Flue Installation Guide.

9. **All systems must be thoroughly cleansed, flushed and treated with inhibitor (see section 6.2).**

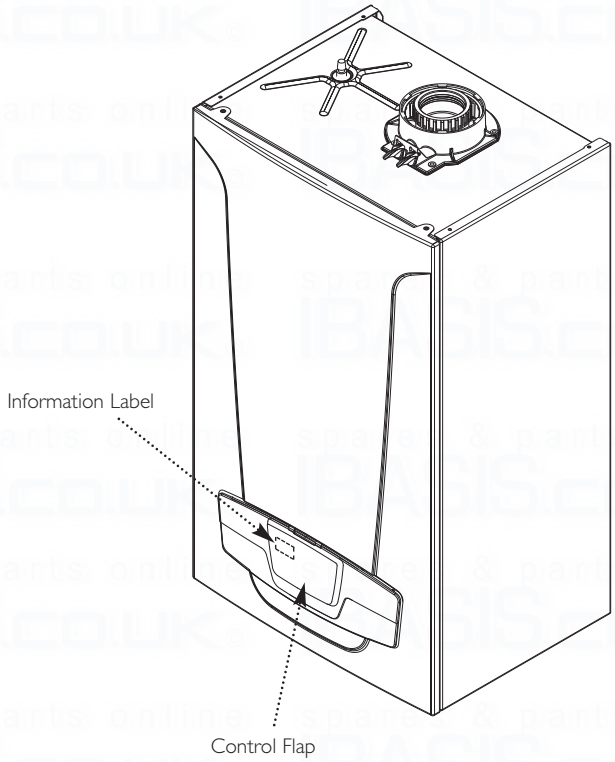

Fig. 1

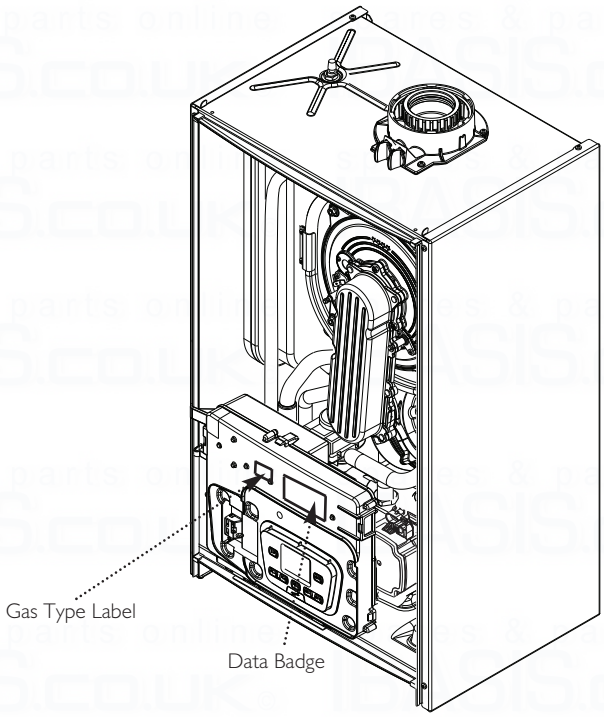

Fig. 2

1.2 Optional Extras

Various timers, external controls, etc. are available as optional extras. Full details are contained in the relevant sales literature.

1.3 Contents of Pack

The pack contains:-

- Boiler
- Wall Plate inc. Taps
- Template
- Fittings & Literature Pack

NOTE: These Installation & Servicing Instructions MUST be read in conjunction with the Flue Installation Guide supplied in the Literature Pack.

© Baxi Heating UK Ltd 2016

2.0 General Layout

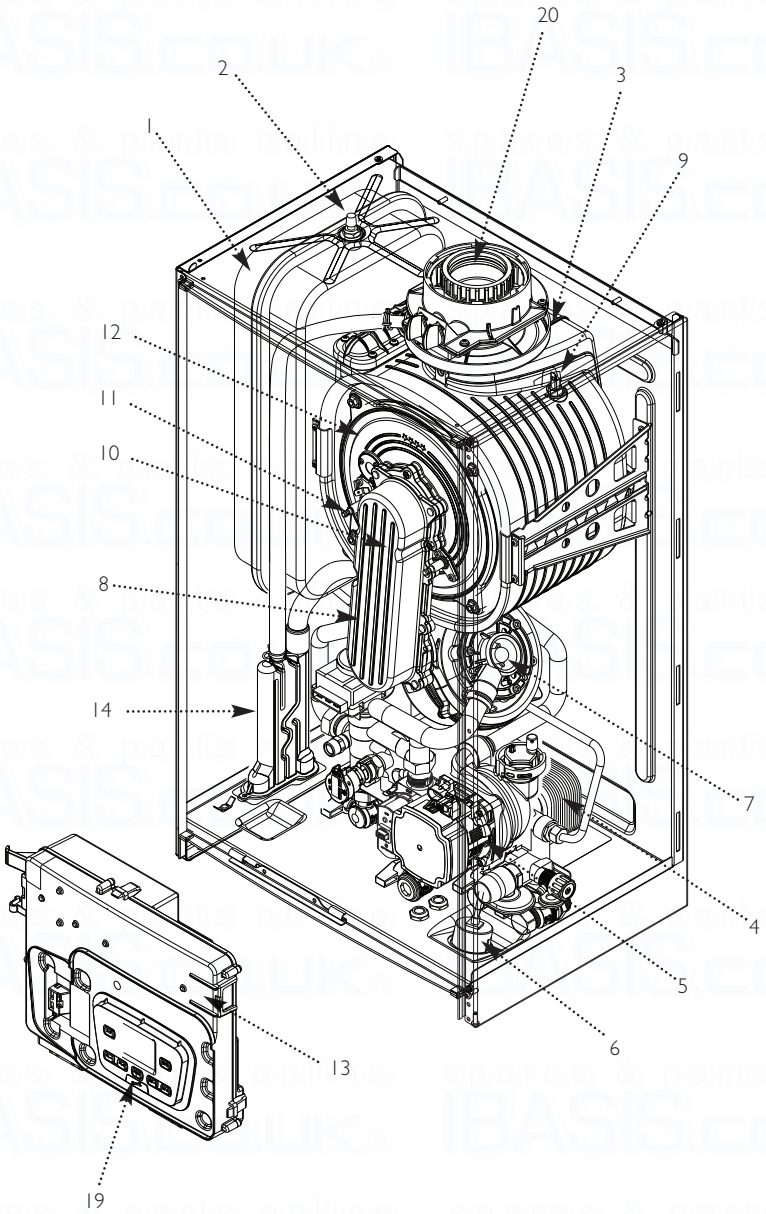

2.1 Layout

1. Expansion Vessel
2. Expansion Vessel Valve
3. Primary Heat Exchanger
4. DHW Plate Heat Exchanger
5. Pump with Automatic Air Vent

(NOTE: The boiler can be fitted with one of two alternative pumps, Grundfos or Wilo. All boiler illustrations show Grundfos. Section 13.11 details both types).

6. Central Heating System Pressure Gauge
7. Fan Assembly
8. Air/Gas Collector
9. Flue Sensor
10. Flame Sensing Electrode
11. Spark Ignition Electrode
12. Combustion Box Cover & Burner
13. Control Box Display
14. Condensate Trap
15. Safety Pressure Relief Valve
16. Drain Off Point
17. Gas Valve
18. Diverter Valve Motor
19. Boiler Controls
20. Boiler Adaptor
21. Heating Flow Sensor
22. Safety Thermostat

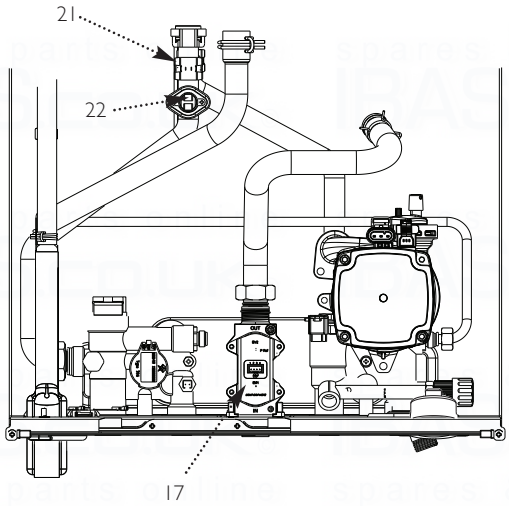

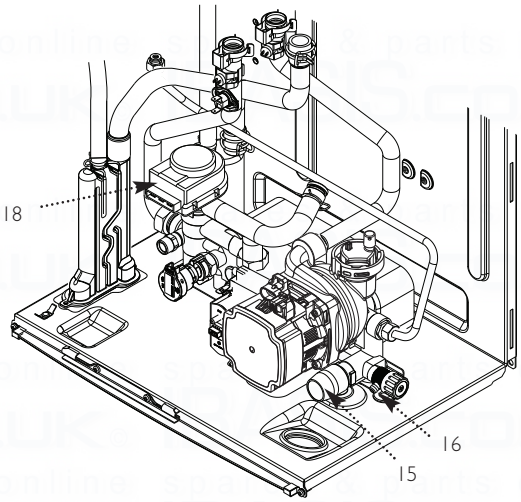

© Baxi Heating UK Ltd 2016

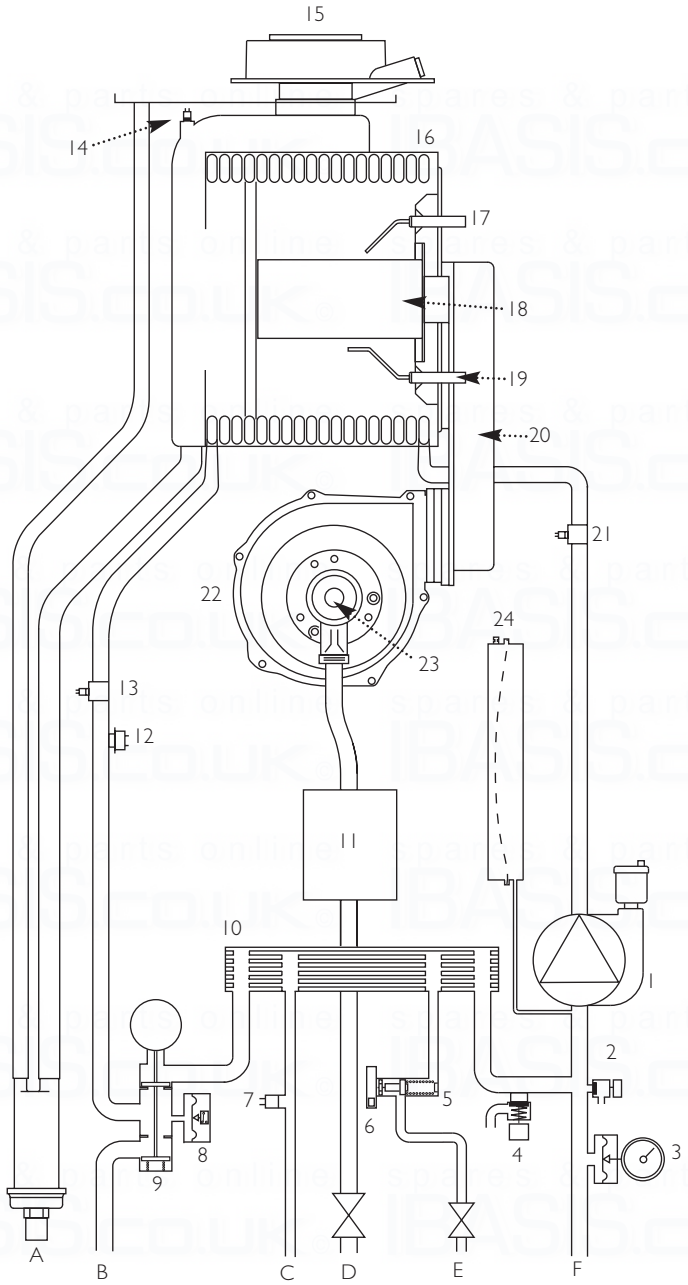

Fig. 3

Key
1. Pump with Automatic Air Vent
2. Boiler Drain Tap
3. Pressure Gauge
4. Safety Pressure Relief Valve
5. DHW Flow Sensor/Filter/Restrictor
6. Domestic Hot Water Priority Sensor
7. Domestic Hot Water NTC Sensor
8. Hydraulic Pressure Switch
9. Three Way Valve & Motor
10. Plate Heat Exchanger
11. Gas Valve
12. Safety Thermostat (105° C)
13. Heating Flow Sensor
14. Flue Sensor
15. Boiler Adaptor
16. Primary Heat Exchanger
17. Spark Ignition Electrode
18. Burner
19. Flame Sensing Electrode
20. Air/Gas Collector
21. Heating Return Sensor
22. Fan
23. Air/Gas Venturi
24. Expansion Vessel

Connections:-
A – Condensate Drain
B – Heating Flow
C – Domestic Hot Water Outlet
D – Gas Inlet
E – Cold Water Inlet On/Off Valve and filter
F – Heating Return

3.0 Appliance Operation

3.1 Central Heating Mode

1. With a demand for heating, the pump circulates water through the primary circuit.

2. Once main burner ignites the fan speed controls the gas rate to maintain the heating temperature measured by the temperature sensor.

3. When the flow temperature exceeds the setting temperature, a 3 minute delay occurs before the burner relights automatically (anti-cycling). The pump continues to run during this period.

4. When the demand is satisfied the burner is extinguished and the pump continues to run for a period of 3 minutes (Pump Overrun).

3.2 Domestic Hot Water Mode

1. Priority is given to the domestic hot water supply. A demand at a tap or shower will override any central heating requirement.

2. The flow of water will operate the Hall Effect Sensor which requests the 3 way valve to change position. This will allow the pump to circulate the primary water through the DHW plate heat exchanger.

3. The burner will light automatically and the temperature of the domestic hot water is controlled by the temperature sensor.

4. When the domestic hot water demand ceases the burner will extinguish and the diverter valve will remain in the domestic hot water mode, unless there is a demand for central heating.

3.3 Boiler Frost Protection Mode

1. The frost protection mode is integral to the appliance and functions as long as there is power to the boiler, as indicated by the standby signal ⏻.

2. With CH & DHW or CH only selected, when the boiler temperature falls below 5°C the boiler will fire until a temperature of 30°C is reached.

3. If DHW only is selected, when the boiler CH temperature falls below 5°C the boiler will fire until a temperature of 30°C is reached. When the boiler DHW temperature falls below 5°C the boiler will fire until a temperature of 7°C is reached.

4. Further protection can be incorporated by using a system frost thermostat.

3.4 Pump Protection

1. If the boiler has been inactive for a period of 24 hours the pump will automatically operate for 1 minute to prevent sticking.

© Baxi Heating UK Ltd 2016

4.1 Promax Ultra 24, 28, 33, 40 Combi

Appliance Type	C_{13} C_{33} C_{43} C_{53}
Appliance Category	CAT I $_{2H\ 3P}$

Heat Input CH Qn Hs (Gross)

		Max	Min
24 model	kW	22.20	3.89
28 model	kW	26.64	4.32
33 model	kW	31.08	5.33
40 model	kW	35.52	6.55

Heat Output CH (Non-Condensing)

		Max	Min
24 model	kW	20.0	3.4
28 model	kW	24.0	3.8
33 model	kW	28.0	4.7
40 model	kW	32.0	5.7

Heat Output CH (Condensing) Pnc

		Max	Min
24 model	kW	21.2	3.7
28 model	kW	25.3	4.1
33 model	kW	29.6	5.1
40 model	kW	33.8	6.2

Heat Input DHW Qnw Hs (Gross)

		Max
24 model	kW	27.4
28 model	kW	32.1
33 model	kW	37.8
40 model	kW	45.8

Heat Output DHW		Max
24 model	kW	24
28 model	kW	28
33 model	kW	33
40 model	kW	40

Injector		
24 model	mm	4.4
28 model	mm	4.6
33 model	mm	4.9
40 model	mm	5.8

NATURAL GAS ONLY !

Max Gas Rate (Natural Gas - G20) (After 10 mins)

24 model	m^3/h	2.61
28 model	m^3/h	3.05
33 model	m^3/h	3.59
40 model	m^3/h	4.35

Inlet Pressure (Natural Gas - G20)
mbar 20

PROPANE ONLY !

Max Gas Rate (Propane - G31) (After 10 mins)

24 model	kg/h	1.96
28 model	kg/h	2.29
33 model	kg/h	2.70
40 model	kg/h	3.27

Inlet Pressure (Propane - G31)
mbar 37

NOTE: All data in this section are nominal values and subject to normal production tolerances.

Electrical Supply 230V~ 50H_Z
(Appliance must be connected to an earthed supply)

Power Consumption

24 model	W	85
28 model	W	90
33 model	W	95
40 model	W	100

Electrical Protection IPX5D

External Fuse Rating 3A

Internal Fuse Rating F2L

Condensate Drain
To accept 21.5mm (3/4 in) plastic waste pipe

Flue Terminal Dimensions		
	Diameter	100mm
	Projection	125mm

Connections		copper tails
Gas Inlet	-	22mm
Heating Flow	-	22mm
Heating Return	-	22mm
Cold Water Inlet	-	15mm
Hot Water Outlet	-	15mm
Pressure Relief Discharge	-	15mm

Outercase Dimensions

Casing Height	- 763mm
Overall Height Inc Flue Elbow	- 923mm
Casing Width	- 450mm
Casing Depth	- 355mm

Clearances

Above Casing	175 mm Min
Below Casing	150 mm* Min
Front	450 mm Min (For Servicing)
Front	5 mm Min (In Operation)
L.H. Side	5 mm Min
R.H. Side	5 mm Min

*This is MINIMUM recommended dimension. Greater clearance will aid installation and maintenance.

Weights

	(24/28)
Packaged Boiler Carton	41.5kg
Installation Lift Weight	36kg
	(33)
Packaged Boiler Carton	43.5kg
Installation Lift Weight	38kg
	(40)
Packaged Boiler Carton	44.5kg
Installation Lift Weight	39kg

Product Characteristics Database (SEDBUK)

SAP 2009 Annual Efficiency for N. G. models is 89.1%
SAP 2009 Annual Efficiency for L.P.G. models is 90.1%

This value is used in the UK Government's Standard Assessment Procedure (SAP) for energy rating of dwellings. The test data from which it has been calculated has been certified by 0085.

NO_x Class 5

Central Heating Primary Circuit Pressures

	bar
Safety Discharge	3
Max Operating	2.5
Min Operating	0.5
Recommended Operating Range	1-2

DHW Circuit Pressures	bar
Max Operating	8
Min Operating	0.15

Flow Rates	(24) l/min	(28) l/min	(33) l/min	(40) l/min
DHW Flow Rate @ 30°C Rise	10.9	12.9	15.3	18.3
DHW Flow Rate @ 35°C Rise	9.8	11.5	13.5	16.4
Min Working DHW Flow Rate	2	2	2	2

IMPORTANT: Where Low Flow Taps or Fittings are intended to be used in the DHW system connected it is strongly recommended that the DHW flow rate DOES NOT fall below 2.5l/min. This will ensure reliable operation of the DHW function.

Expansion Vessel - (For Central Heating only. Integral with appliance)

	bar
Min Pre-charge Pressure	0.5

	(24 & 28) litre	(33 & 40) litre
Max Capacity of CH System	125	125
Primary Water Content of Boiler (unpressurised)	2.5	2.8

Temperatures

C.H. Flow Temp (adjustable)
25°C to 80°C max (± 5°C)

D.H.W. Flow Temp (adjustable)
35°C to 60°C max (± 5°C) dependent upon flow rate

Pump

Available Head See graph below

Pump - Available Head

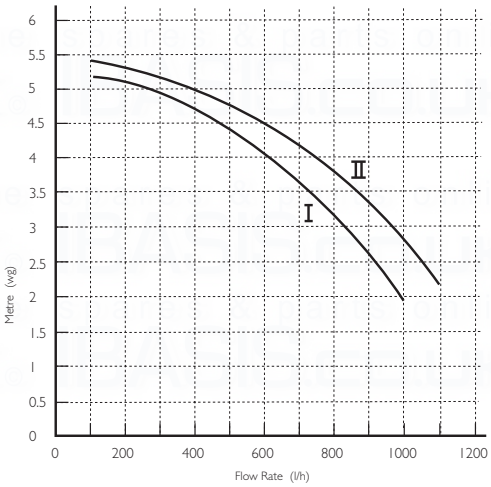

 © Baxi Heating UK Ltd 2016

Technical parameters for boiler combination heaters

Potterton Promax Ultra Combi ErP			24	28	33	40
Condensing boiler			Yes	Yes	Yes	Yes
Low-temperature boiler(1)			No	No	No	No
B1 boiler			No	No	No	No
Cogeneration space heater			No	No	No	No
Combination heater			Yes	Yes	Yes	Yes
Rated heat output	*Prated*	kW	20	24	28	32
Useful heat output at rated heat output and high temperature regime(2)	P_4	kW	20.0	24.0	28.0	32.0
Useful heat output at 30% of rated heat output and low temperature regime(1)	P_1	kW	6.7	8.0	9.4	10.7
Seasonal space heating energy efficiency	η_s	%	93	93	93	93
Useful efficiency at rated heat output and high temperature regime(2)	η_4	%	88.0	87.9	88.1	87.9
Useful efficiency at 30% of rated heat output and low temperature regime(1)	η_1	%	98.0	98.0	98.1	98.0
Auxiliary electricity consumption						
Full load	*elmax*	kW	0.030	0.042	0.041	0.035
Part load	*elmin*	kW	0.013	0.013	0.013	0.013
Standby mode	P_{SB}	kW	0.003	0.003	0.003	0.003
Other items						
Standby heat loss	P_{stby}	kW	0.035	0.035	0.040	0.045
Ignition burner power consumption	P_{ign}	kW	-	-	-	-
Annual energy consumption	Q_{HE}	kWh GJ	17204 62	20645 74	24086 87	27527 99
Sound power level, indoors	L_{WA}	dB	49	50	53	51
Emissions of nitrogen oxides	NO_X	mg/kWh	15	17	15	24
Domestic hot water parameters						
Declared load profile			XL	XL	XXL	XXL
Daily electricity consumption	Q_{elec}	kWh	0.162	0.232	0.214	0.276
Annual electricity consumption	*AEC*	kWh	36	51	47	61
Water heating energy efficiency	η_{wh}	%	88	86	87	85
Daily fuel consumption	Q_{fuel}	kWh	22	22	28	28
Annual fuel consumption	*AFC*	GJ	17	17	22	22

(1) Low temperature means for condensing boilers 30°C, for low temperature boilers 37°C and for other heaters 50°C return temperature (at heater inlet).
(2) High temperature regime means 60°C return temperature at heater inlet and 80°C feed temperature at heater outlet.

See
The back cover for contact details.

© Baxi Heating UK Ltd 2016

NOTE: There must be no part of the air duct (white tube) visible outside the property after installation. The flue seal should fit neatly and effect a good seal. For full detail refer to Section 9.7 "Fitting the Flue".

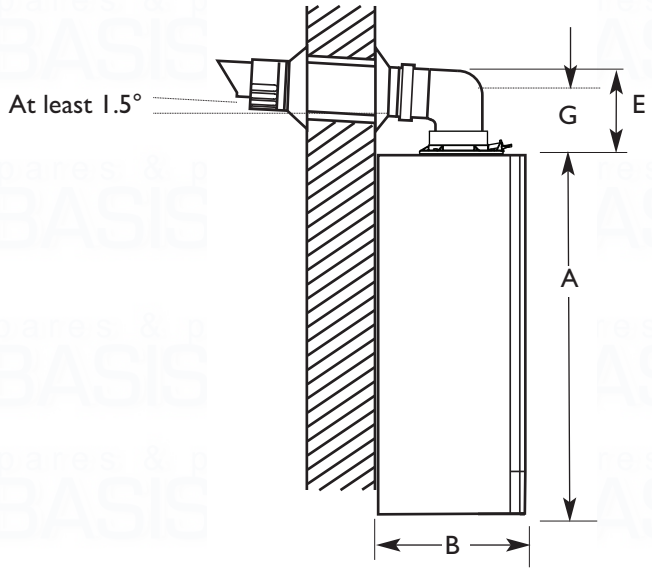

Dimensions	
A	763mm
B	355mm* *This can be reduced to 345mm by removing the boiler control access flap
C	450mm
D	116mm Ø Min.
E	160mm (207mm for 80/125mm flue systems)
F	150mm
G	106mm
H	170mm
J	280mm

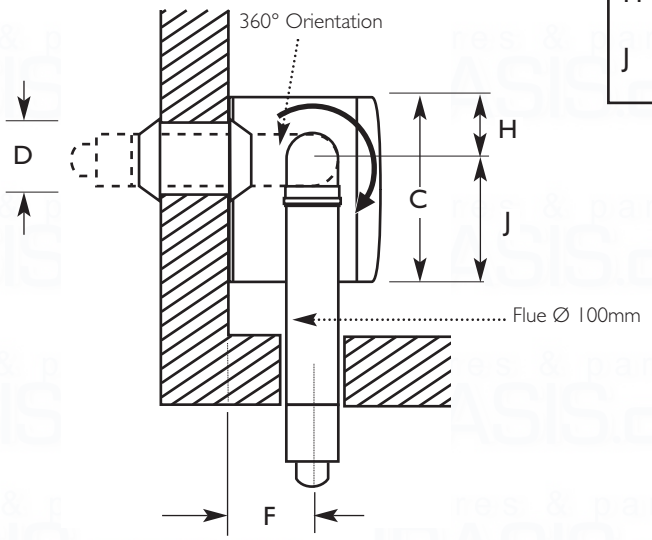

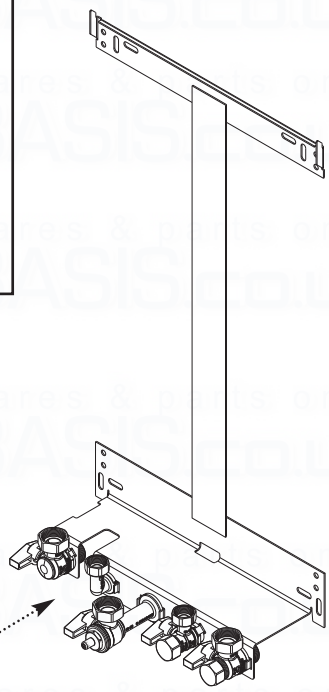

Tap Rail

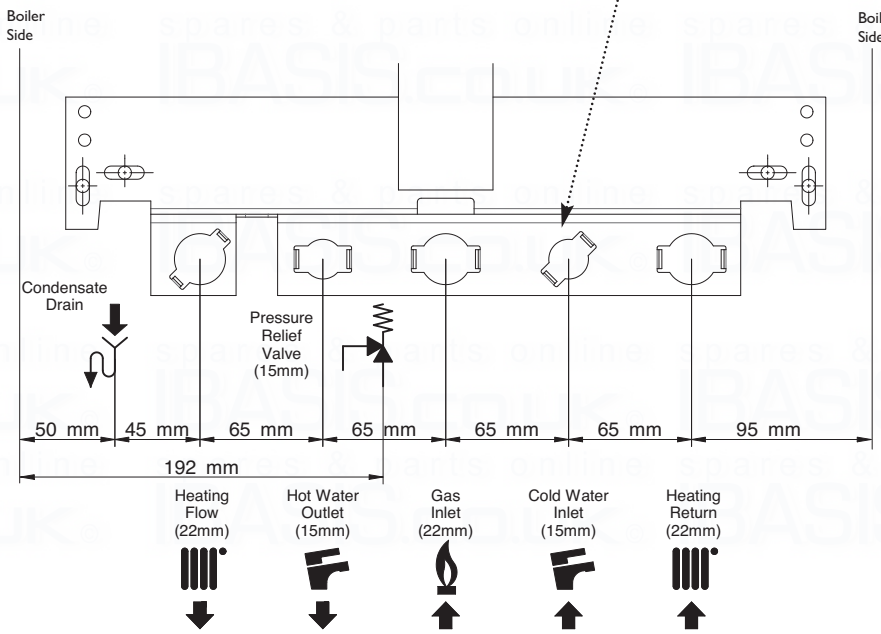

 © Baxi Heating UK Ltd 2016

6.0 System Details

6.1 Information

1. The Potterton Promax Ultra Condensing Combination Boiler is a 'Water Byelaws Scheme - Approved Product'. To comply with the Water Byelaws your attention is drawn to the following installation requirements and notes (IRN).

a) IRN 001 - See text of entry for installation requirements and notes.

b) IRN 302 - Byelaw 14.

2. Reference to the WRc publications, 'Water fittings and materials directory' and 'Water supply byelaws guide' give full details of byelaws and the IRNs.

6.2 Treatment of Water Circulating Systems

1. All recirculatory water systems will be subject to corrosion unless they are flushed and an appropriate water treatment is applied. To prevent this, follow the guidelines given in BS 7593 "Treatment of Water in Domestic Hot Water Central Heating Systems" and the treatment manufacturers instructions.

2. Treatment must involve the use of a proprietary cleanser, such as Sentinel X300 or X400, or Fernox F3 and an inhibitor such as Sentinel X100 or Fernox MB-1.

3. Full instructions are supplied with the products, for further information contact Sentinel (0800 389 4670) or Fernox (0870 870 0362).

Failure to flush and add inhibitor to the system will invalidate the appliance warranty.

4. It is important to check the inhibitor concentration after installation, system modification and at every service in accordance with the inhibitor manufacturer's instructions. (Test kits are available from inhibitor stockists.)

5. For information or advice regarding any of the above contact Baxi Customer Support 0344 871 1545.

6.3 Bypass

1. The boiler is fitted with an automatic integral bypass. Some systems may require an additional external bypass.

6.4 System Control

1. Further external controls (e.g. room thermostat sensors) MUST be fitted to optimise the economical operation of the boiler in accordance with Part L of the Building Regulations (2010). A range of optional controls is available. Full details are contained in the relevant Sales Literature.

© Baxi Heating UK Ltd 2016

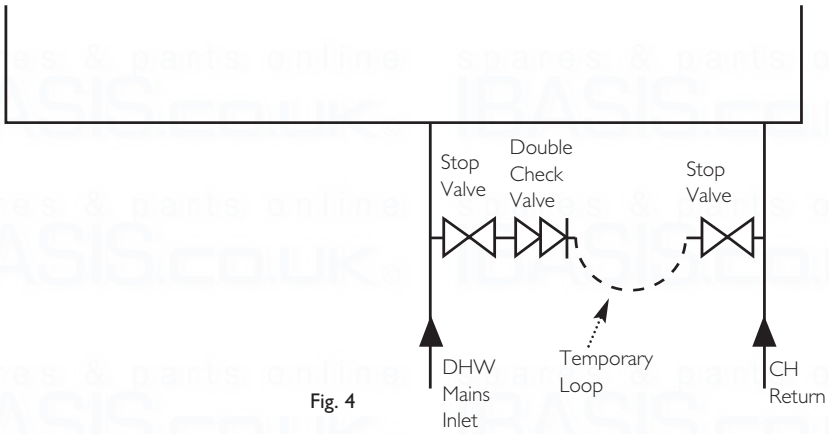

Fig. 4

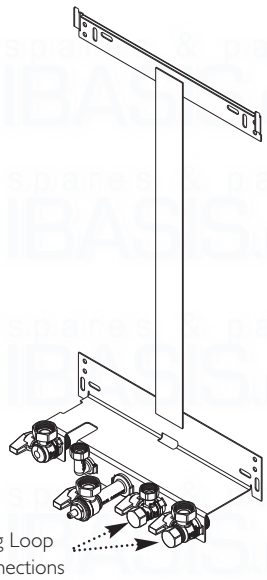

Fig. 5

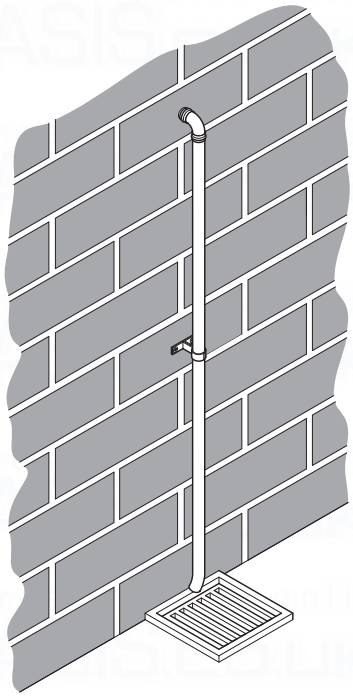

The end of the pipe should terminate facing down and towards the wall

Fig. 6a

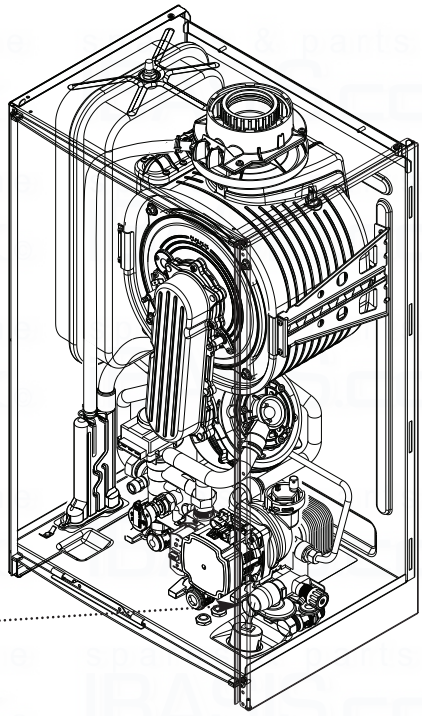

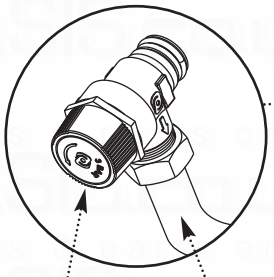

Fig. 6

6.5 System Filling and Pressurising

1. A filling point connection on the central heating return pipework must be provided to facilitate initial filling and pressurising and also any subsequent water loss replacement/refilling.

2. A filling loop is supplied with the boiler. Follow the instructions provided with it.

3. The filling method adopted must be in accordance with all relevant water supply regulations and use approved equipment.

4. Your attention is drawn to:
for GB: Guidance G24.2 and recommendation R24.2 of the Water Regulations Guide.
for IE: the current edition of I.S. 813 "Domestic Gas Installations".

5. The sealed primary circuits may be filled or replenished by means of a temporary connection between the circuit and a supply pipe, provided a 'Listed' double check valve or some other no less effective backflow prevention device is permanently connected at the inlet to the circuit and the temporary connection is removed after use.

6.6 Expansion Vessel (Central Heating only)

1. The appliance expansion vessel is pre-charged to 1.0 bar. Therefore, the minimum cold fill pressure is 1.0 bar. The vessel is suitable for correct operation for system capacities up to 125 litres . For greater system capacities an additional expansion vessel must be fitted. For GB refer to BS 7074 Pt 1. For IE, the current edition of I.S. 813 "Domestic Gas Installations".

6.7 Safety Pressure Relief Valve (Fig. 6)

1. The pressure relief valve is set at 3 bar, therefore all pipework, fittings, etc. should be suitable for pressures in excess of 3 bar and temperature in excess of 100°C.

2. The pressure relief discharge pipe should be not less than 15mm dia, run continuously downward, and discharge outside the building, preferably over a drain. It should be routed in such a manner that no hazard occurs to occupants or causes damage to wiring or electrical components. The end of the pipe should terminate facing down and towards the wall (Fig. 6a).

3. The discharge must not be above a window, entrance or other public access. Consideration must be given to the possibility that boiling water/steam could discharge from the pipe.

4. A remote relief valve kit is available to enable the boiler to be installed in cellars or similar locations below outside ground level (kit no. 5121379).

5. A boiler discharge pump is available, part no. 720648301. This pump will dispose of both condensate & high temperature water from the relief valve. It has a maximum head of 5 metres.

 © Baxi Heating UK Ltd 2016

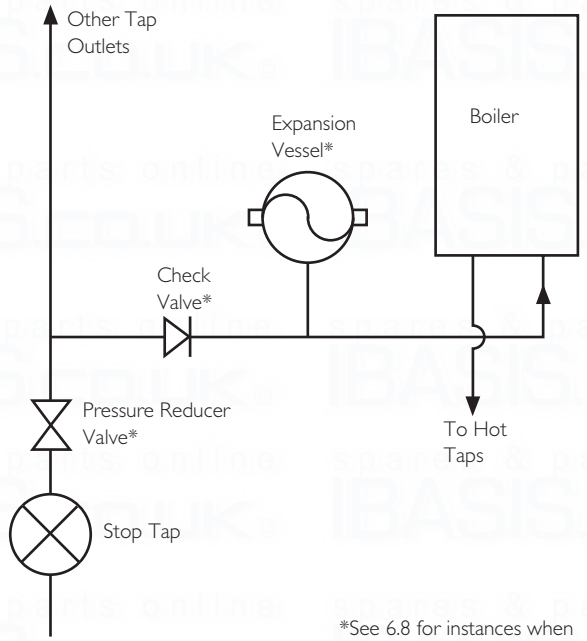

*See 6.8 for instances when these items may be required

Fig. 7

IMPORTANT: Where Low Flow Taps or Fittings are intended to be used in the DHW system connected to a Potterton Promax Ultra it is strongly recommended that the DHW flow rate DOES NOT fall below 2.5l/min. This will ensure reliable operation of the DHW function.

6.8 Domestic Hot Water Circuit (Fig. 7)

1. All DHW circuits, connections, fittings, etc. should be fully in accordance with relevant standards and water supply regulations.

2. Your attention is drawn to:
for GB: Guidance G17 to G24 and recommendation R17 to R24 of the Water Regulations Guide.
for IE: the current edition of I.S. 813 "Domestic Gas Installations".

3. The Water Regulations recommendations for England and Wales prohibits backflow from appliances into the wholesome water supply due to thermal expansion. However this type of instantaneous combination boiler, with less than 15 litres of stored capacity, does not require any backflow prevention device as any thermal expansion is accommodated within the appliance.
It is possible in certain circumstances that other cold water demands (e.g. washing machines, flushing of W.C.s) may affect the DHW function of the boiler. In these instances the fitting of a backflow prevention device and expansion vessel is recommended.

4. Also if there is an existing check valve, loose jumpered stop cock, water meter or water treatment device already fitted to the wholesome water supply connected to the boiler domestic hot water (DHW) inlet supply then a suitable expansion device may be required.

5. The boiler's maximum working mains pressure is 8 bar, therefore all pipework, connections, fittings, etc. should be suitable for pressures in excess of 8 bar. A pressure reducing valve must be fitted for pressures in excess of 8 bar. The manufacturer of any outlet fittings, such as a shower valve, may require a lower maximum pressure. The pressure reduction must take account of all fittings connected to the DHW system.

6.9 Showers

1. If a shower control is supplied from the appliance it should be of the thermostatic or pressure balanced type. Thermostatic type shower valves provide the best comfort and guard against water at too high a temperature. Existing controls may not be suitable - refer to the shower valve manufacturer.

6.10 Hard Water Areas

1. If the area of the installation is recognised as a HARD WATER AREA then a suitable device should be fitted to treat the mains water supply to the boiler. Contact your Water Distribution Company for advice on suitable devices.

© Baxi Heating UK Ltd 2016

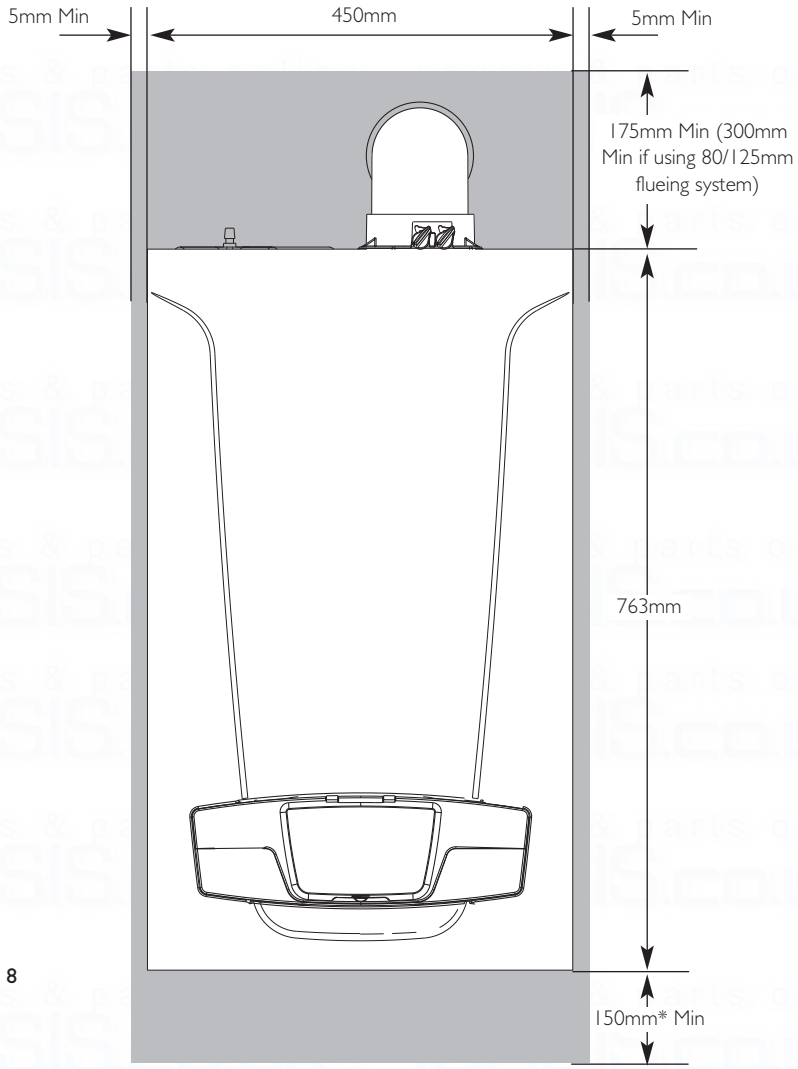

Fig. 8

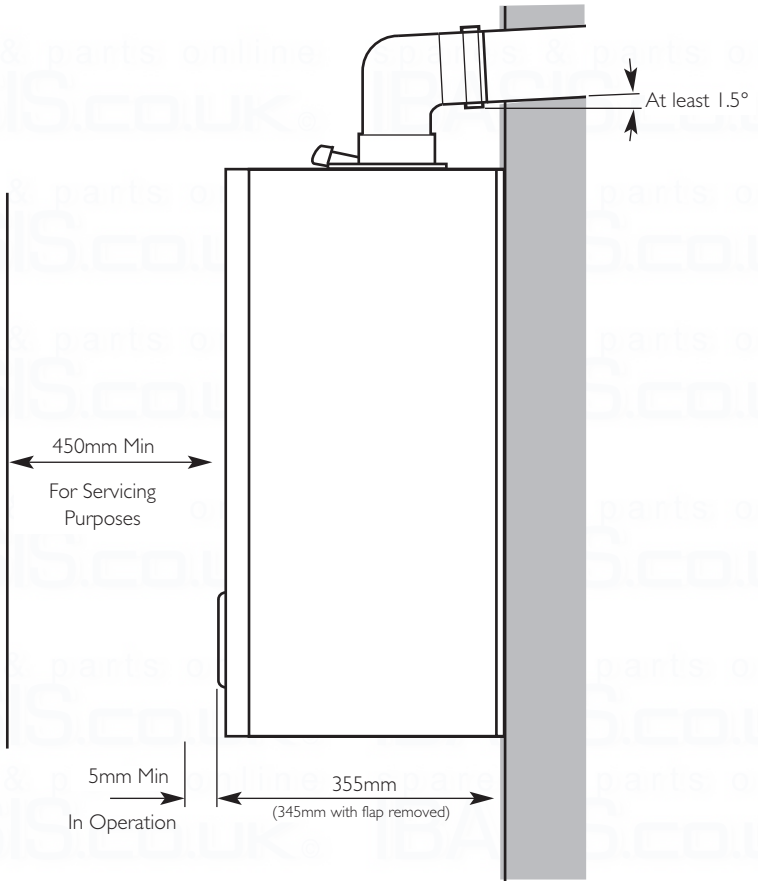

Fig. 9

7.0 Site Requirements

7.1 Location

1. The boiler may be fitted to any suitable wall with the flue passing through an outside wall or roof and discharging to atmosphere in a position permitting satisfactory removal of combustion products and providing an adequate air supply. The boiler should be fitted within the building unless otherwise protected by a suitable enclosure i.e. garage or outhouse. (The boiler may be fitted inside a cupboard-see Section 7.3).

2. Where the boiler is sited in an unheated enclosure and during periods when the heating system is to be unused it is recommended that the permanent live is left on to give BOILER frost protection. NOTE: THIS WILL NOT PROTECT THE SYSTEM!

3. If the boiler is fitted in a room containing a bath or shower reference must be made to the relevant requirements.
In GB this is the current I.E.E. Wiring Regulations and Building Regulations.
In IE reference should be made to the current edition of I.S. 813 "Domestic Gas Installations" and the current ETCI rules.

4. If the boiler is to be fitted into a building of timber frame construction then reference must be made to the current edition of Institute of Gas Engineers Publication IGE/UP/7 (Gas Installations in Timber Framed Housing).

7.2 Clearances (Figs. 8 & 9)

1. A flat vertical area is required for the installation of the boiler.

2. These dimensions include the necessary clearances around the boiler for case removal, spanner access and air movement. Additional clearances may be required for the passage of pipes around local obstructions such as joists running parallel to the front face of the boiler.

*This is MINIMUM recommended dimension. Greater clearance will aid installation and maintenance.

7.3 Ventilation of Compartments

1. Where the appliance is installed in a cupboard or compartment, no air vents are required.

2. BS 5440: Part 2 refers to room sealed appliances installed in compartments. The appliance will run sufficiently cool without ventilation.

 © Baxi Heating UK Ltd 2016

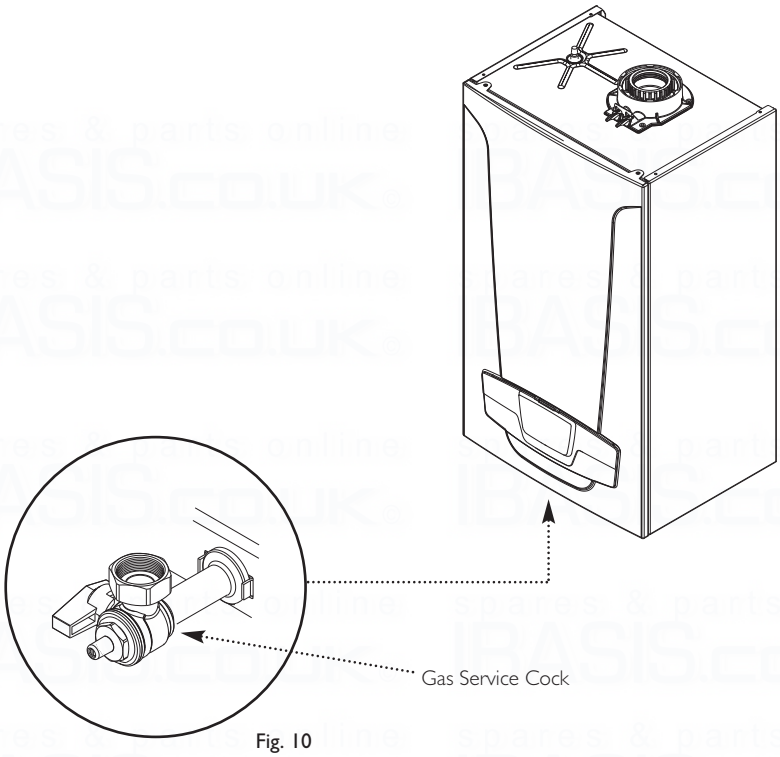

Fig. 10

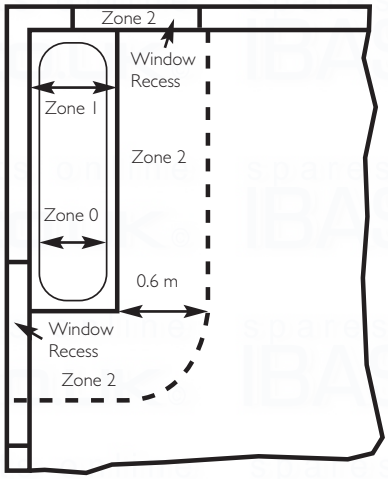

Fig. A In GB Only

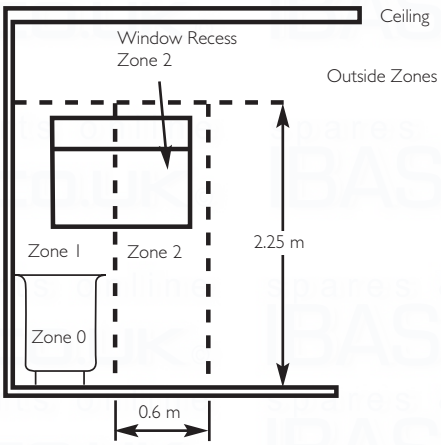

Fig. B In GB Only

7.0 Site Requirement

7.4 Gas Supply

1. The gas installation should be in accordance with the relevant standards. In GB this is BS 6891 (NG) or BS 5482 Pt. 1 (LPG). In IE this is the current edition of I.S. 813 "Domestic Gas Installations".

2. The connection to the appliance is a 22mm copper tail located at the rear of the gas service cock (Fig. 10).

3. Ensure that the pipework from the meter to the appliance is of adequate size, and the demands of any other gas appliances in the property are taken into consideration. Do not use pipes of a smaller diameter than the boiler gas connection (22mm).

7.5 Electrical Supply

1. External wiring must be correctly earthed, polarised and in accordance with relevant regulations/rules. In GB this is the current I.E.E. Wiring Regulations. In IE reference should be made to the current edition of ETCI rules.

2. The mains supply is 230V ~ 50H_Z fused at 3A.

NOTE: The method of connection to the electricity supply must facilitate complete electrical isolation of the appliance.

Connection may be via a fused double-pole isolator with a contact separation of at least 3mm in all poles and servicing the boiler and system controls only.

7.6 Bath & Shower Rooms

1. If the boiler is fitted in a room containing a bath or shower it can be fitted in zone 2, (Figs. A & B shows zone dimensions for a bathtub. For other examples refer to the Current I.E.E. Wiring Regulations) reference must be made to the relevant requirements.
In GB this is the current I.E.E. Wiring Regulations and Building Regulations.
In IE reference should be made to the current edition of I.S. 813 "Domestic Gas Installations" and the current ETCI rules.

© Baxi Heating UK Ltd 2016

Examples are shown of the following methods of termination:-
i) to an internal soil & vent pipe
ii) via an internal discharge branch (e.g. sink waste) downstream of the trap
iii) to a drain or gully
iv) to a purpose made soakaway
v) pumped into an internal discharge branch (e.g. sink waste) downstream of the trap
vi) pumped into an external soil & vent pipe
vii) to a drain or gully with extended external run & trace heating

It is strongly recommended to discharge internally into the household drainage system. If connecting to a rain water drain, that drain MUST discharge into a foul drain.

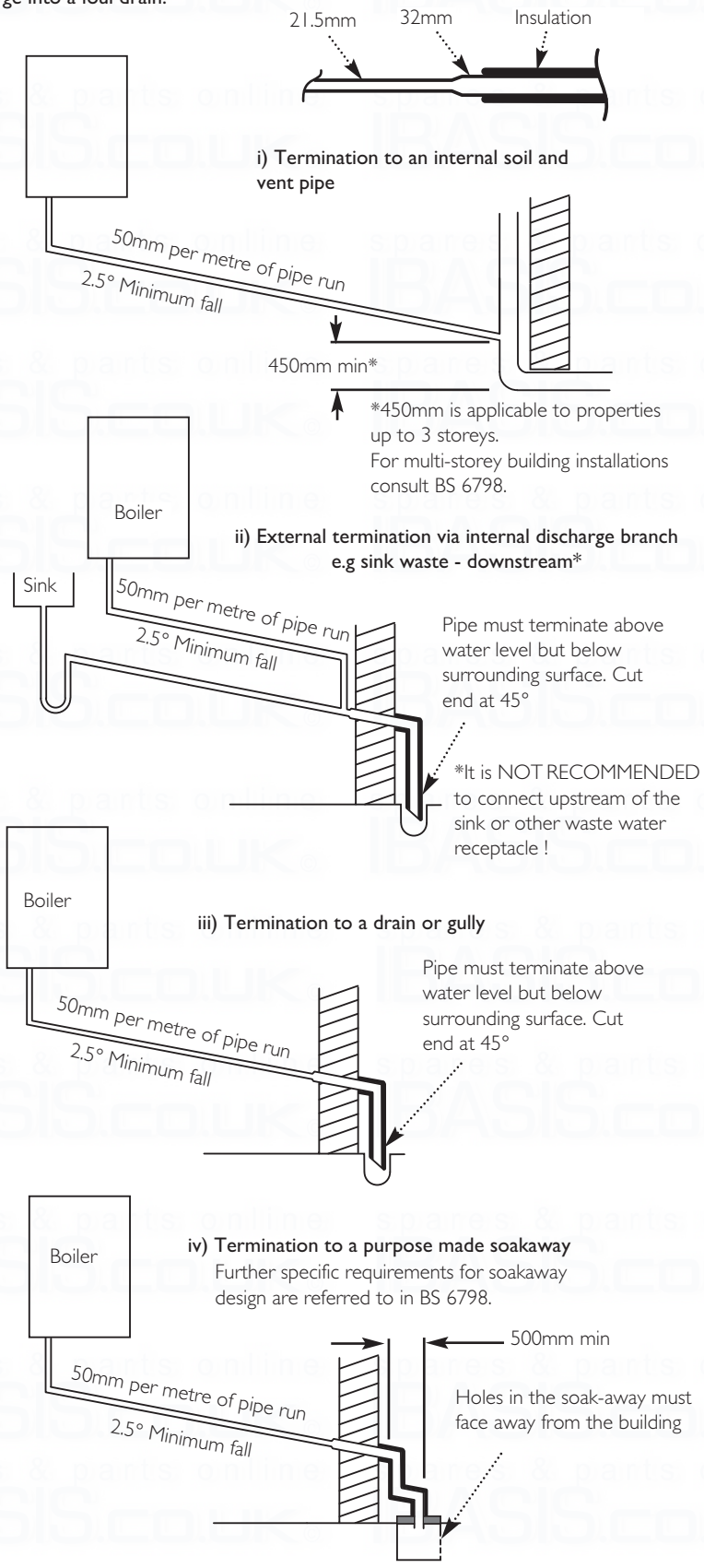

7.0 Site Requirements

7.7 Condensate Drain

FAILURE TO INSTALL THE CONDENSATE DISCHARGE PIPEWORK CORRECTLY WILL AFFECT THE RELIABLE OPERATION OF THE BOILER.

CAREFUL CONSIDERATION MUST BE GIVEN TO THE POSSIBILITY OF THE PIPEWORK BEING SUBJECT TO FREEZING CONDITIONS AND APPROPRIATE MEASURES TAKEN TO PREVENT BLOCKAGE. CORRECT INSTALLATION IN ACCORDANCE WITH THIS SECTION WILL CONSIDERABLY MINIMISE THE LIKELIHOOD OF BLOCKAGE AND SUBSEQUENT BOILER LOCK-OUT.

A CONDENSATE DISCHARGE PUMP AND PIPE 'TRACE HEATING' ARE AVAILABLE AS ACCESSORIES - see paragraphs 7.7.12 to 7.715 for further details.

The condensate discharge pipe MUST NOT RISE at any point along its length. There MUST be a fall of AT LEAST 2.5° (50mm per metre) along the entire run EXCEPT when employing a suitable condensate pump in basement and cellar or similar applications.

The boiler condensate trap incorporates a seal of 75mm, therefore it is unnecessary to install an air break and trap in the discharge pipework.

1. The condensate outlet will accept 21.5mm (3/4in) plastic overflow pipe. **It is strongly recommended that this discharges internally into the household drainage system.** Where this is not possible, discharge into an outside drain is permissible providing every possible precaution is taken to prevent freezing.

2. Ensure the discharge of condensate complies with any national or local regulations in force. **BS 6798 & Part H1 of the Building Regulations give further detailed guidance.**

3. The discharge pipe should be run in a proprietary drain pipe material e.g. PVC, PVC-U, ABS, PVC-C or PP.

4. Metal pipework is NOT suitable for use in condensate discharge systems.

5. The pipe should be a minimum of 21.5mm diameter and must be supported using suitably spaced clips of the correct design to prevent sagging.

6. **It is advisable that the full length of condensate pipe is run internally and preferably be less than 3 metres.**

7. **Internal runs greater than 3 metres or runs in cold areas should use 32mm waste pipe.**

8. **External runs MUST be a MINIMUM of 32mm and fully insulated with material suitable for external use.**

9. If the boiler is fitted in an unheated location the entire condensate discharge pipe should be treated as an external run and sized and insulated accordingly.

10. In all cases discharge pipe must be installed to aid disposal of the condensate. To reduce the risk of condensate being trapped, as few bends and fittings as possible should be used and any burrs on cut pipe removed.

11. When discharging condensate into a soil stack or waste pipe the effects of existing plumbing must be considered. If soil pipes or waste pipes are subjected to internal pressure fluctuations when WC's are flushed or sinks emptied then back-pressure may force water out of the boiler trap and cause appliance lockout.

 © Baxi Heating UK Ltd 2016

v) pumped into an internal discharge branch (e.g. sink waste) downstream of the trap

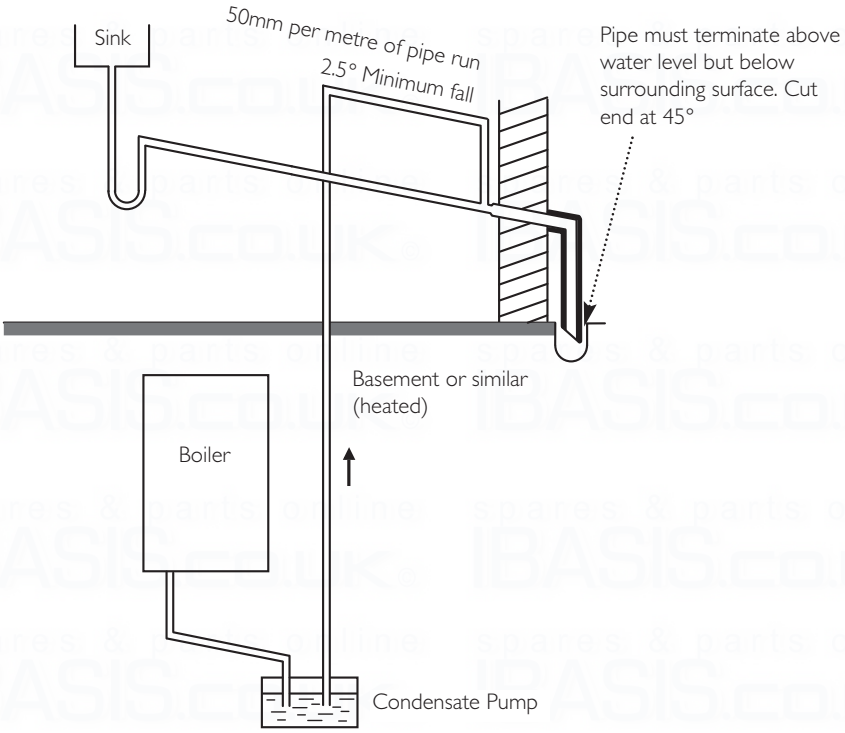

vi) pumped into an external soil & vent pipe

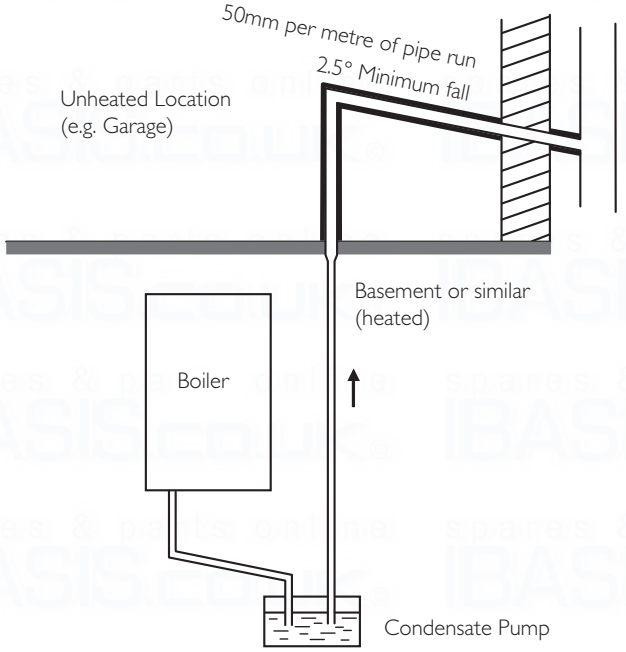

7.0 Site Requirements

7.7 Condensate Drain (cont.)

12. A boiler discharge pump is available, 'MULTIFIT' part no. 720648301. This pump will dispose of both condensate & high temperature water from the relief valve. It has a maximum head of 5 metres. Follow the instructions supplied with the pump.

13. Condensate Drain Pipe 'Trace Heating' Elements are available in various lengths. 'MULTIFIT' part nos.:-

1 metre 720644401
2 metre 720664101
3 metre 720664201
5 metre 720664401*

*Where the drain is between 3 & 5 metres a 5 metre kit can be used and "doubled back" upon itself.

14. It is possible to fit the element externally on the condensate drain or internally as detailed in the instructions provided.

15. The fitting of a 'Trace Heating' Element is NOT a substitute for correct installation of the condensate drain. ALL requirements in this section must still be adhered to.

vii) to a drain or gully with extended external run & trace heating

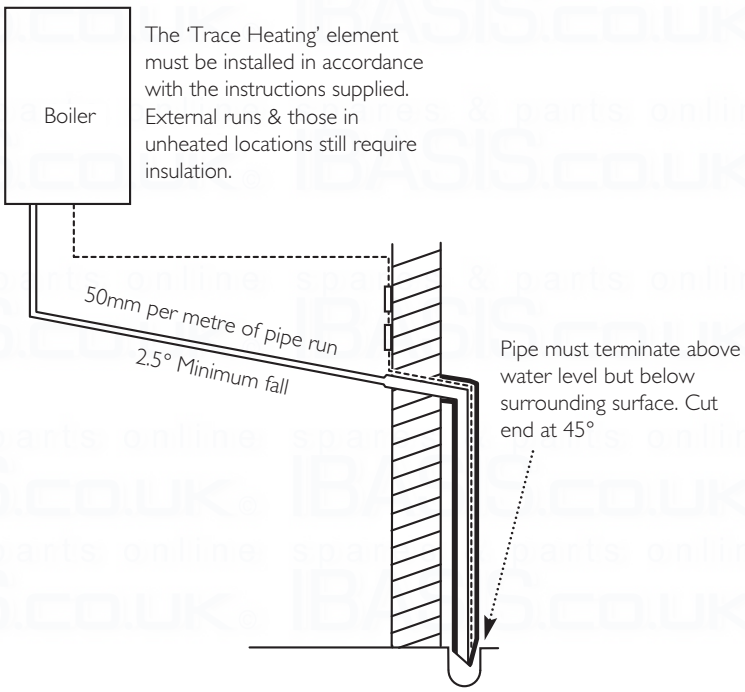

© Baxi Heating UK Ltd 2016

Terminal Position with Minimum Distance (Fig. 12)		(mm)
A[1]	Directly below an opening, air brick, opening windows, etc.	300
B[1]	Above an opening, air brick, opening window etc.	300
C[1]	Horizontally to an opening, air brick, opening window etc.	300
D[2]	Below gutters, soil pipes or drain pipes.	25 (75)
E[2]	Below eaves.	25 (200)
F[2]	Below balconies or car port roof.	25 (200)
G[2]	From a vertical drain pipe or soil pipe.	25 (150)
H[2]	From an internal or external corner.	25 (300)
I	Above ground, roof or balcony level.	300
J	From a surface or boundary line facing a terminal.	600
K	From a terminal facing a terminal (Horizontal flue).	1200
	From a terminal facing a terminal (Vertical flue).	600
L	From an opening in carport (e.g. door, window) into the dwelling.	1200
M	Vertically from a terminal on the same wall.	1500
N	Horizontally from a terminal on the same wall.	300
R	From adjacent wall to flue (vertical only).	300
S	From an adjacent opening window (vertical only).	1000
T	Adjacent to windows or openings on pitched and flat roofs	600
U	Below windows or openings on pitched roofs	2000

[1] In addition, the terminal should be no nearer than 150 mm to an opening in the building fabric formed for the purpose of accommodating a built-in element such as a window frame.

[2] Only **ONE** 25mm clearance is allowed per installation. If one of the dimensions D, E, F, G or H is 25mm then the remainder **MUST** be as shown in brackets, in accordance with B.S.5440-1.

NOTE: The distance from a fanned draught appliance terminal installed parallel to a boundary may not be less than 300mm in accordance with the diagram below

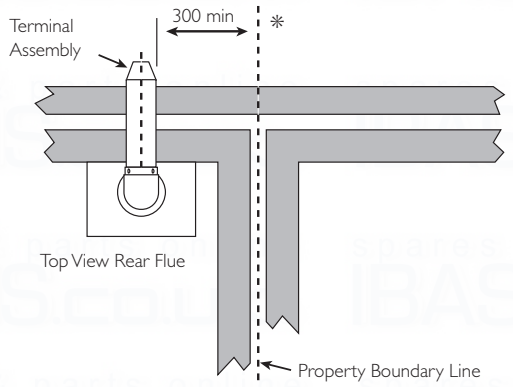

Fig. 11

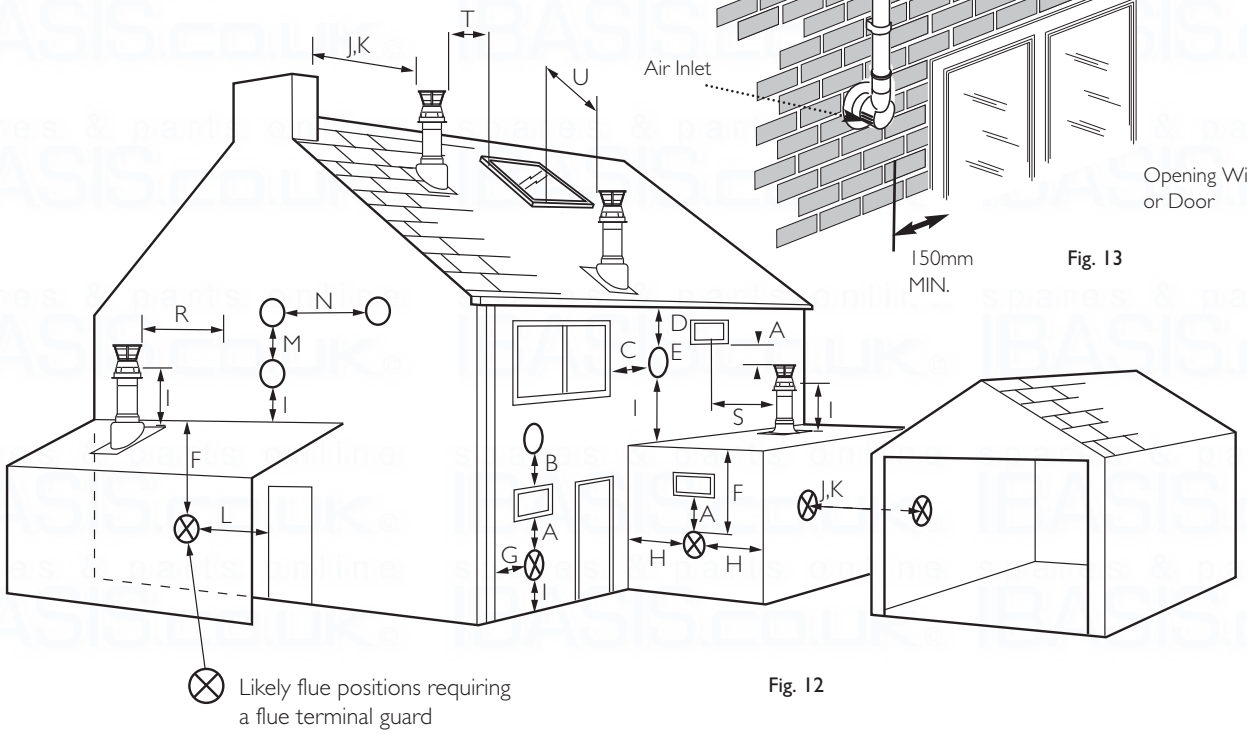

Fig. 12

7.0 Site Requirements

7.8 Flue

NOTE: Due to the nature of the boiler a plume of water vapour will be discharged from the flue. This should be taken into account when siting the flue terminal.

1. The following guidelines indicate the general requirements for siting balanced flue terminals. For GB recommendations are given in BS 5440 Pt 1. For IE recommendations are given in the current edition of I.S. 813 "Domestic Gas Installations".

2. If the terminal discharges onto a pathway or passageway, check that combustion products will not cause a nuisance and that the terminal will not obstruct the passageway.

3. **If a terminal is less than 2 metres above a balcony, above ground or above a flat roof to which people have access, then a suitable terminal guard must be provided.**

IMPORTANT:
- Under car ports we recommend the use of the plume displacement kit.
- The terminal position must ensure the safe and nuisance - free dispersal of combustion products.

*4. Reduction to the boundary is possible down to 25mm but flue deflector part no. 5111068 must be used.

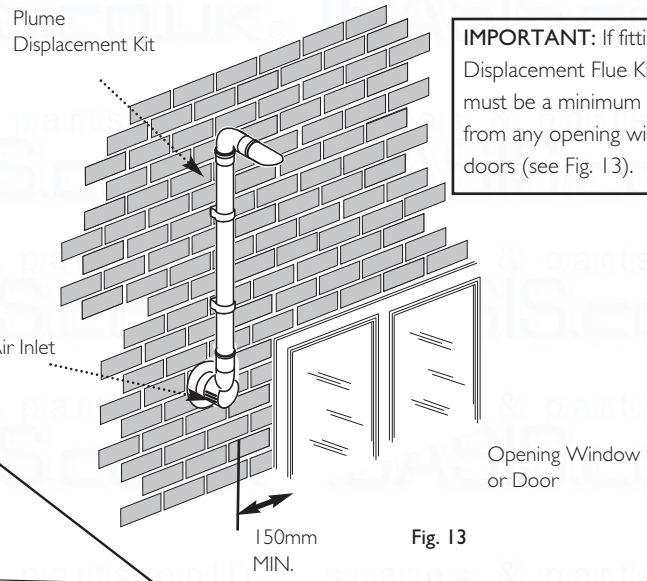

Fig. 13

IMPORTANT: If fitting a Plume Displacement Flue Kit, the air inlet must be a minimum of 150mm from any opening windows or doors (see Fig. 13).

© Baxi Heating UK Ltd 2016

8.0 Flue Options

8.1 Horizontal Flue Systems

1. The standard flue is suitable only for horizontal termination applications.

2. All fittings should be fully engaged. The approximate engagement is 40mm. Apply the lubricant supplied to the seal on each fitting to aid assembly.

3. Maximum permissible equivalent flue lengths are:-

	(60/100)	(80/125)
Horizontal Concentric	10 metres	20 metres

4. Any additional "in line" bends in the flue system must be taken into consideration.
Their equivalent lengths are:-
Concentric Pipes:

135° bend	0.5 metres
93° bend	1.0 metres

5. The elbow supplied with the standard horizontal telescopic flue kit is not included in any equivalent length calculations.

NOTE: Flue length is measured from point (i) to (ii) as shown.

IMPORTANT
SUPPORT - All flue systems MUST be securely supported a MINIMUM of once every metre. It is recommended that every straight piece is supported irrespective of length. Additional supports are available as accessories.
VOIDS - Consideration must be given to flue systems in voids and the provision of adequate access for subsequent periodic visual inspection.

6. Read this section in conjunction with the Flue Installation Guide supplied with the boiler.

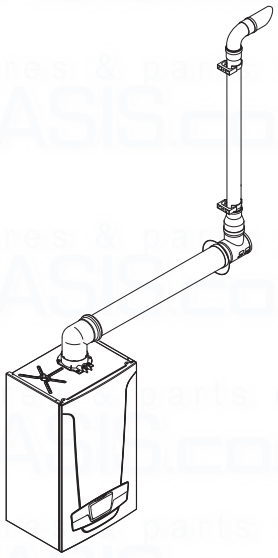

Plume Displacement Kit 60 /100 dia 1M Extensions 45° & 93° elbows are also available - see the separate Flue Guide.

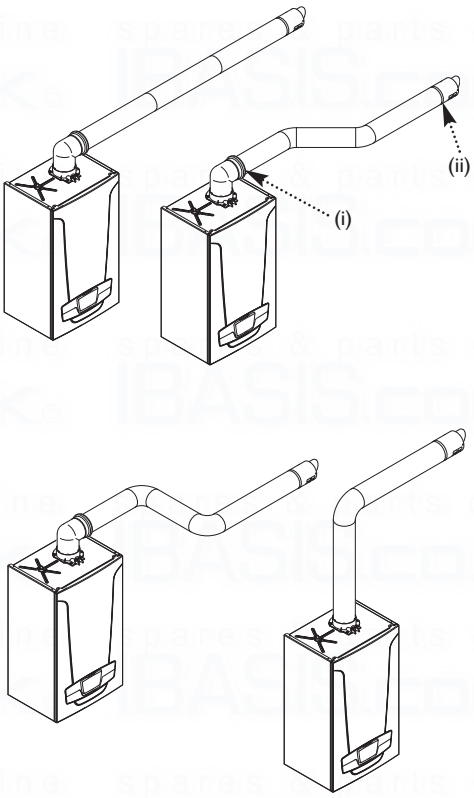

Horizontal Flues

NOTE: Horizontal flue pipes should always be installed with a fall of at least 1.5° from the terminal to allow condensate to run back to the boiler.

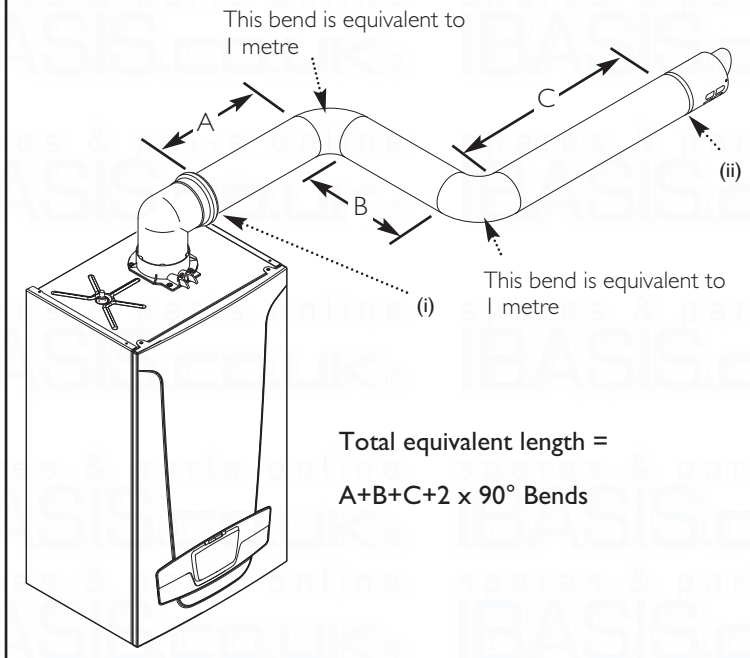

Total equivalent length =

A+B+C+2 x 90° Bends

© Baxi Heating UK Ltd 2016

8.0 Flue Options

8.2 Flue Lengths

The standard horizontal telescopic flue kit allows for lengths between 315mm and 500mm from elbow to terminal without the need for cutting (Fig. 14).
Extensions of 250mm, 500mm & 1m are available.

The maximum permissible equivalent flue length is:

10 metres (60/100 system - vertical & horizontal)
20 metres (80/125 system - vertical & horizontal)
15 metres (80/80 twin pipe)
8 metres (60/100 system - vertical connected to ridge terminal)

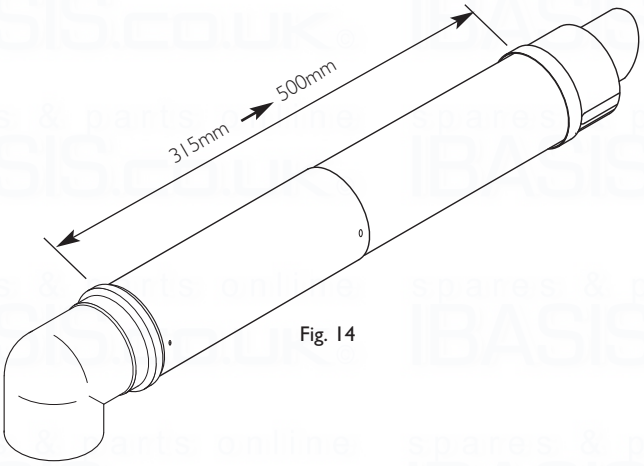

Fig. 14

8.3 Flue Trim

1. The flexible flue trims supplied can be fitted on the outer and inner faces of the wall of installation.

8.4 Terminal Guard (Fig. 15)

1. When codes of practice dictate the use of terminal guards 'Multifit' accessory part no. 720627901 can be used (Note: This is not compatible with Flue Deflector referred to below).

2. There must be a clearance of at least 50mm between any part of the terminal and the guard.

3. When ordering a terminal guard, quote the appliance name and model number.

4. The flue terminal guard should be positioned centrally over the terminal and fixed as illustrated.

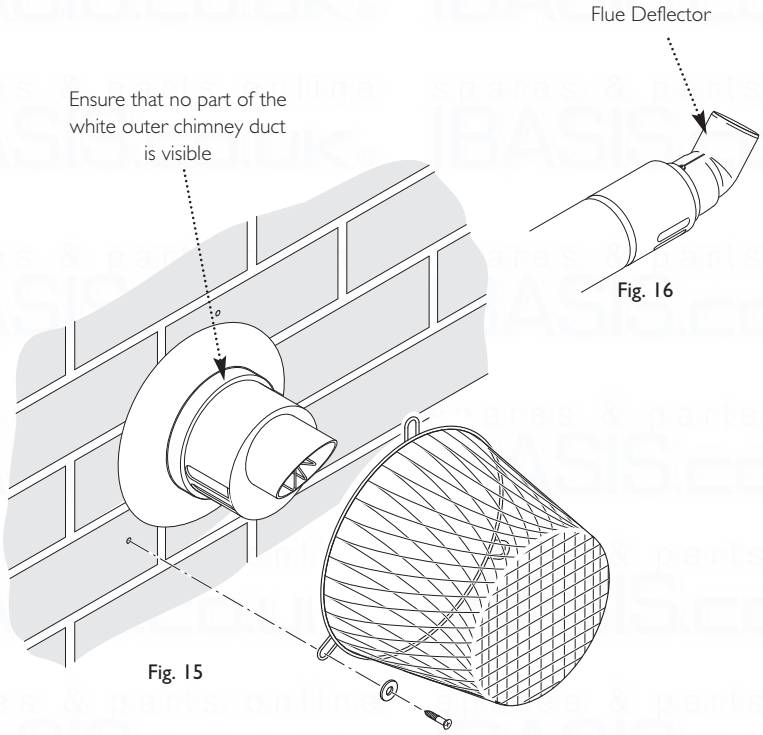

Fig. 16

Fig. 15

8.5 Flue Deflector (Fig. 16)

1. Push the flue deflector over the terminal end. It may point upwards as shown, or up to 45° either way from vertical. Secure the deflector to the terminal with screws provided.

8.6 Flue Accessories

1. For full details of Flue Accessories (elbows, extensions, clamps etc.) refer to the Flue Installation Guide supplied in the literature pack.

 © Baxi Heating UK Ltd 2016

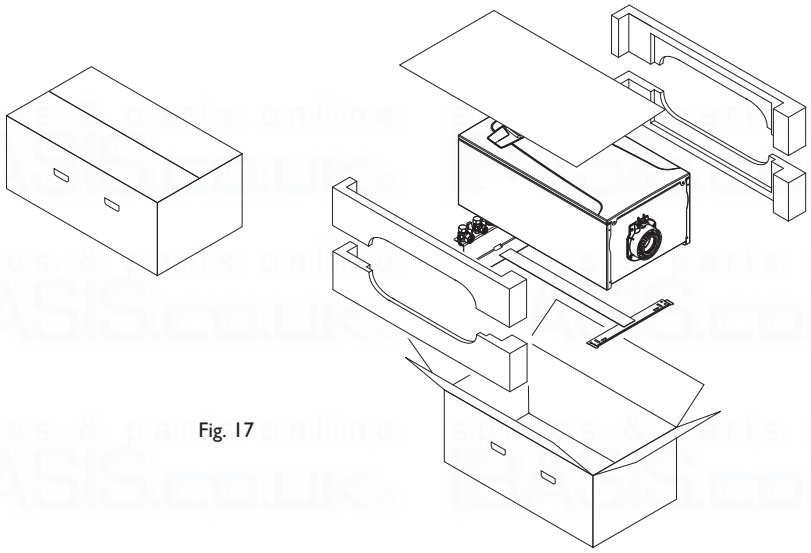

Fig. 17

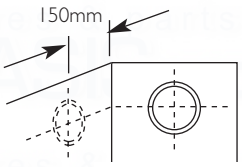

For Side Flue Exit

Fig. 18

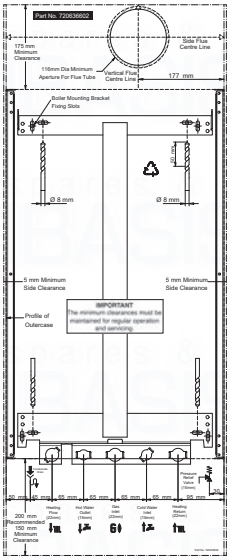

Wall Template

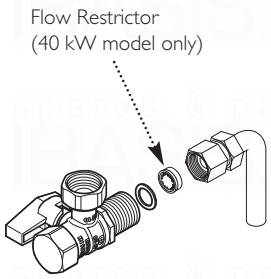

Fig. 19

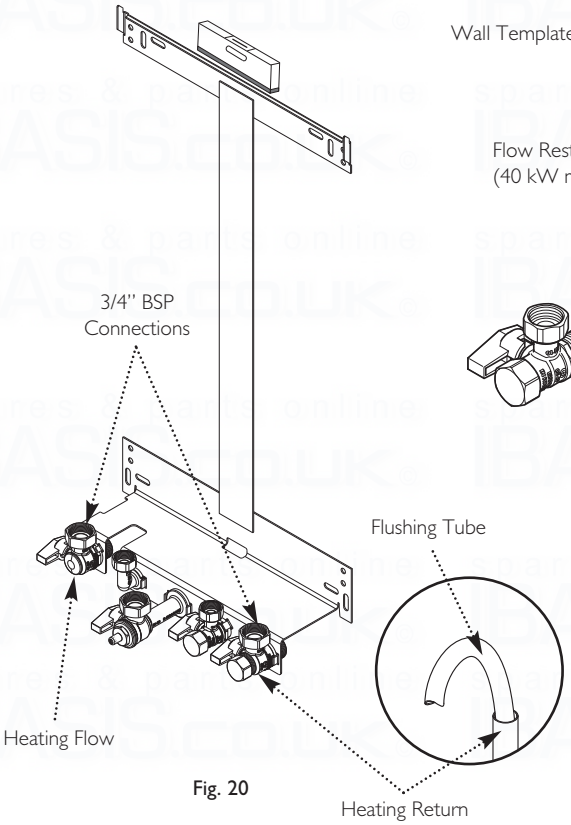

Fig. 20

9.0 Installation

9.1 Unpacking & Initial Preparation

IMPORTANT
RISK ASSESSMENT - Before commencing the installation it is recommended that the 'Five Steps to Risk Assessment' document published by the HSE is consulted, and an assessment performed as described.
GAS SUPPLY - The gas supply, gas type and pressure must be checked for suitability before connection (see Section 7.4).

NOTE: A small amount of water may drain from the boiler in the upright position. If pre-plumbing it will be necessary to turn the carton over to access the wall plate first.

1. Remove staples, open flaps and remove the cardboard sheet. Remove the polystyrene side pieces and literature. Two people can then lift out the boiler (Fig. 17).

2. After considering the site requirements (see Section 7.0) position the fixing template on the wall ensuring it is level both horizontally and vertically.

3. Mark the position of the two most suitable fixing slots for the wall plate and boiler lower fixing holes.

4. Mark the position of the centre of the flue hole (rear exit). For side flue exit, mark as shown (Fig. 18).

5. If required, mark the position of the gas and water pipes. Remove the template.

6. Cut the hole for the flue (minimum diameter 116mm).

7. Drill the wall as previously marked to accept the wall plugs supplied. Secure the wall plate using the fixing screws.

8. Using a spirit level ensure that the plate is level before finally tightening the screws.

9. Connect the gas and water pipes to the valves on the wall plate using the copper tails supplied. Ensure that the sealing washers are fitted between the connections.

NOTE: 40kW models ONLY - ensure the flow restrictor is inserted in cold water inlet connection (Fig. 19). On other models the restrictor is factory fitted internally.

10. Fit the filling loop as described in the instructions supplied with it.

9.2 Flushing

1. Connect a tube to the heating flow or return pipe (Fig. 20).

2. Flush thoroughly (see System Details, Section 6.2).

© Baxi Heating UK Ltd 2007

Note: Full instructions are provided in the Filling Loop Kit pack.

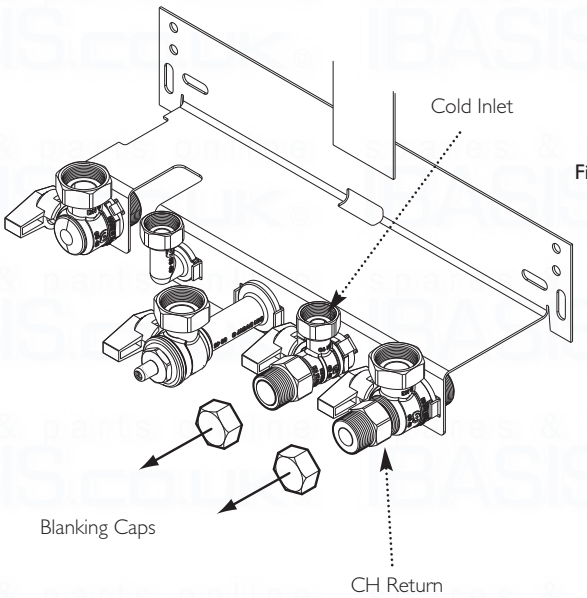

Fig. 20a

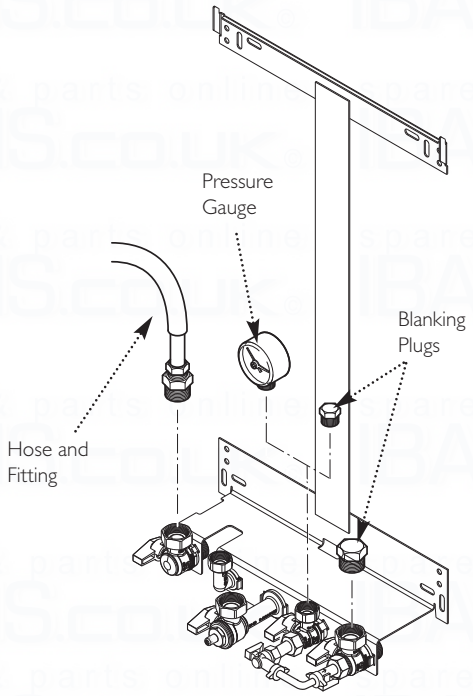

Fig. 20b

9.3 Fitting the Filling Loop Kit

1. The filling loop kit supplied with the boiler can be connected to the taps on the wall plate at this point. (Either one of two types of loop kit will be supplied - both function in the same way, differing only in detail).

2. The filling loop is to be connected between the mains cold water inlet and central heating return isolation taps.

3. The loop and valves must be connected as described in the instructions supplied with it.

4. Note the orientation of the flow direction arrows on the stop valve and double check/stop valves.

5. Remove the blanking caps from the mains cold water inlet and central heating return isolation taps (Fig. 20a). Connect the valves to the taps, ensuring that the fibre washers supplied are used on these joints.

6. Connect the temporary loop, ensuring that the seals are fitted.

To fill, test and flush if required (Fig. 20b)

7. Take the blanking plugs from the kit, and using washers supplied with the boiler, connect them to the central heating flow and return taps, and the cold inlet tap. The system can now be filled by opening the cold inlet supply and stop valves.

8. If desired a suitable gauge can be connected to one of the taps so that the system may be accurately pressurised.

9. All joints, fittings and system components can now be examined for soundness at operating pressure.

10. The system can be flushed by turning off the central heating tap and connecting a suitable fitting to the loose nut. From the fitting a hose pipe can be run to the nearest convenient drain. When the tap is reopened the system will flush.

11. Remove the blanking plug(s), pressure gauge and flushing equipment from the appliance if used.

12. Continue with the installation and commissioning.

13. The filling loop must be disconnected and completely removed after the system is pressurised.

14. Depending upon the type of kit supplied either hand tighten the two previously removed blanking caps to the stop valve and double check valve, or use the caps supplied in the kit.

 © Baxi Heating UK Ltd 2016

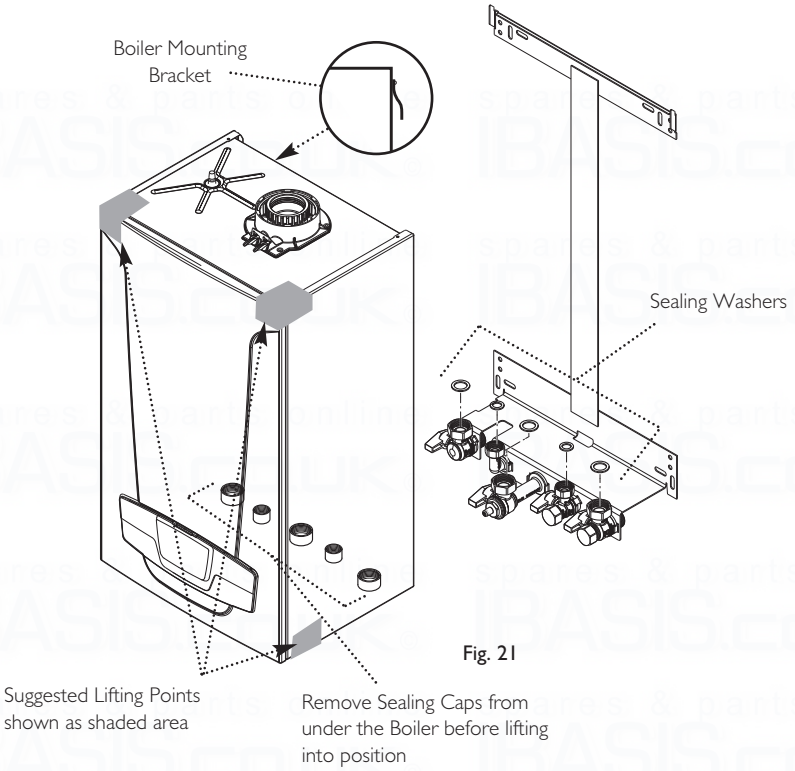

Fig. 21

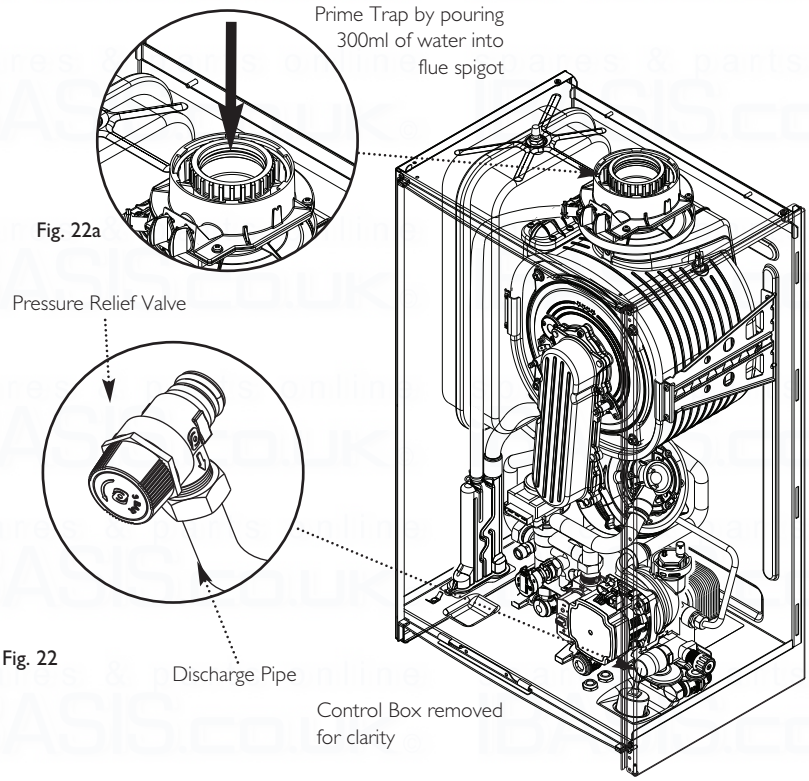

Fig. 22a

Fig. 22

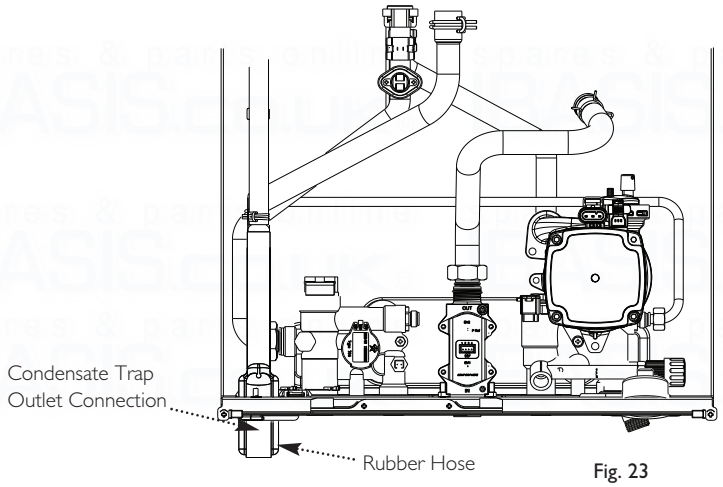

Fig. 23

9.0 Installation

9.4 Fitting The Boiler

1. Remove the sealing caps from the boiler connections.

> **NOTE:** A small amount of water may drain from the boiler once the caps are removed.

2. Lift the boiler as indicated by the shaded areas. The boiler should be lifted by TWO PEOPLE. Engage the mounting bracket at the top rear of the boiler on the wall plate (Fig. 21) (see **Safe Manual Handling** page 5).

3. **Insert the sealing washers between the valves and pipes on the wall plate and the boiler connections. Tighten all the connections.**

9.5 Fitting the Safety Pressure Relief Discharge Pipe (Fig. 22)

1. Remove the discharge pipe from the kit.

2. Determine the routing of the discharge pipe in the vicinity of the boiler. Make up as much of the pipework as is practical, including the discharge pipe supplied.

> **IMPORTANT:** Make all soldered joints before connecting to the pressure relief valve. The relief valve is intentionally angled to the right of the boiler. DO NOT adjust the position of the valve. The discharge pipe must be installed before pressurising the system.

3. The pipework must be at least 15mm diameter and run continuously downwards to a discharge point outside the building. See section 6.7 for further details.

4. Utilising one of the sealing washers, connect the discharge pipe to the adaptor and tighten the nut hand tight, plus 1/4 turn to seal.

5. Complete the discharge pipework and route it to the outside discharge point.

9.6 Condensate Drain (see section 7.7) (Fig. 23)

1. Using the short piece of rubber hose supplied, connect the condensate drain pipework to the boiler condensate trap outlet pipe. When connecting the hose, ensure that the condensate sump is not inadvertently unscrewed,

> Ensure the discharge of condensate complies with any national or local regulations in force (see British Gas "Guidance Notes for the Installation of Domestic Gas Condensing Boilers" & HHIC recommendations).

2. The hose will accept 21.5mm (3/4in) plastic overflow pipe which should generally discharge internally into the household drainage system. If this is not possible, discharge into an outside drain is acceptable.

3. The boiler condensate trap should be primed by pouring approximately 300ml of water into the flue spigot (Fig. 22a). Do not allow any water to fall into the air inlet.

© Baxi Heating UK Ltd 2016

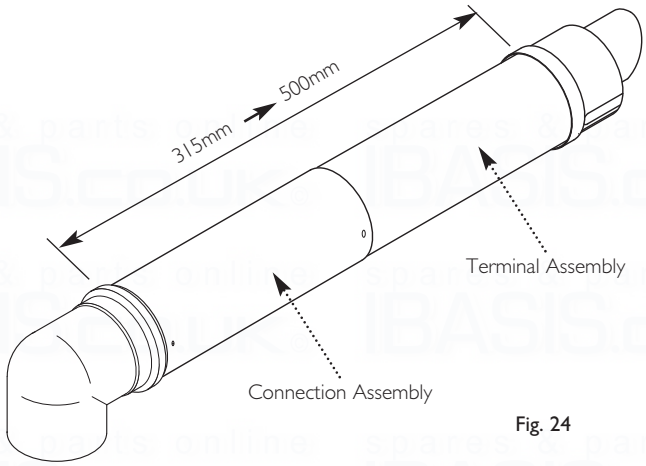

Fig. 24

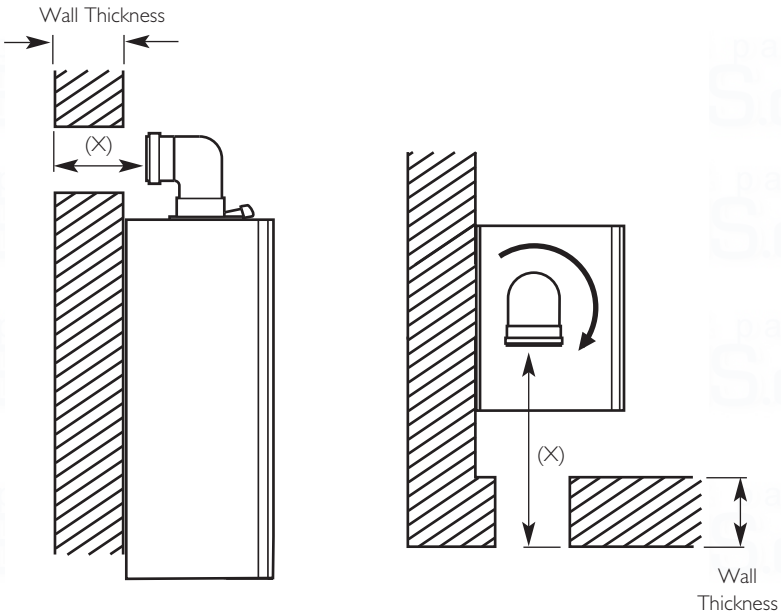

Fig. 25

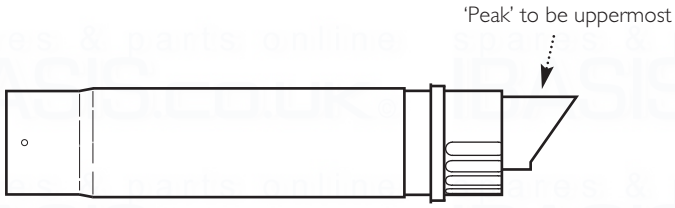

Fig. 26

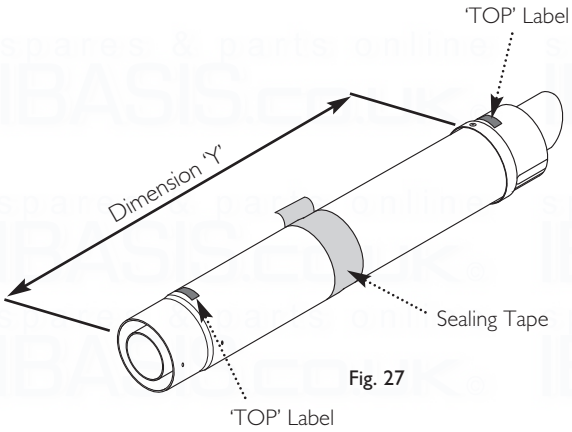

Fig. 27

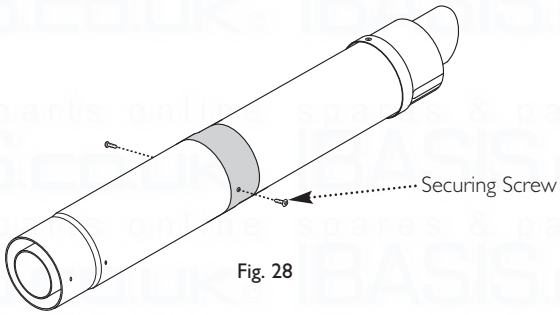

Fig. 28

9.0 Installation

9.7 Fitting The Flue

HORIZONTAL TELESCOPIC FLUE

1. There are two telescopic sections, the Terminal Assembly and the Connection Assembly, a roll of sealing tape and two self tapping screws. A 93° elbow is also supplied.

2. The two sections can be adjusted to provide a length between 315mm and 500mm (Fig. 24) when measured from the flue elbow (there is 40mm engagement into the elbow).

3. Locate the flue elbow on the adaptor at the top of the boiler. Set the elbow to the required orientation (Fig. 25).

NOTE: The flue elbow is angled at 93 degrees to ensure a fall back to the boiler.

4. Measure the distance from the outside wall face to the elbow. This dimension will be known as 'X' (Fig. 25).

5. If the distance from the flue elbow to the outside face of the wall ('X' in Fig. 25) is less than 250mm the Connection Assembly can be discarded and the Terminal Assembly fitted directly into the elbow.

6. In instances where the dimension 'X' (Fig. 25) is between 250mm and 315mm it will be necessary to shorten the Terminal Assembly by careful cutting to accommodate walls of these thicknesses.

7. To dimension 'X' add 40mm. This dimension to be known as 'Y'.

8. Adjust the two telescopic sections to dimension 'Y' and seal the joint with the tape provided (Fig. 27). Ensure that the labels marked 'TOP' on the Terminal and Connection Assemblies are uppermost.

9. Using the clearance holes in the Connection Assembly secure it to the Terminal Assembly using the screws supplied (Fig. 28).

 © Baxi Heating UK Ltd 2016

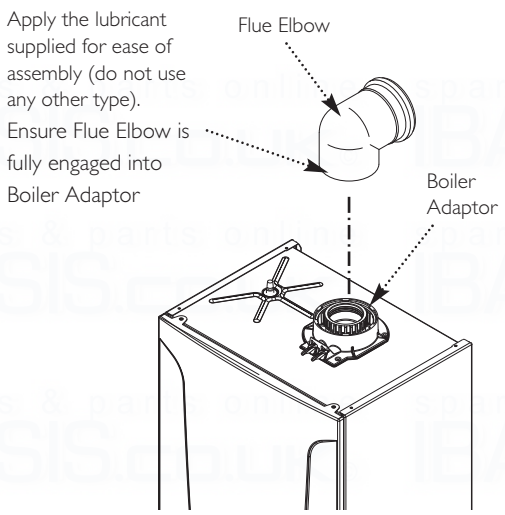

Fig. 29

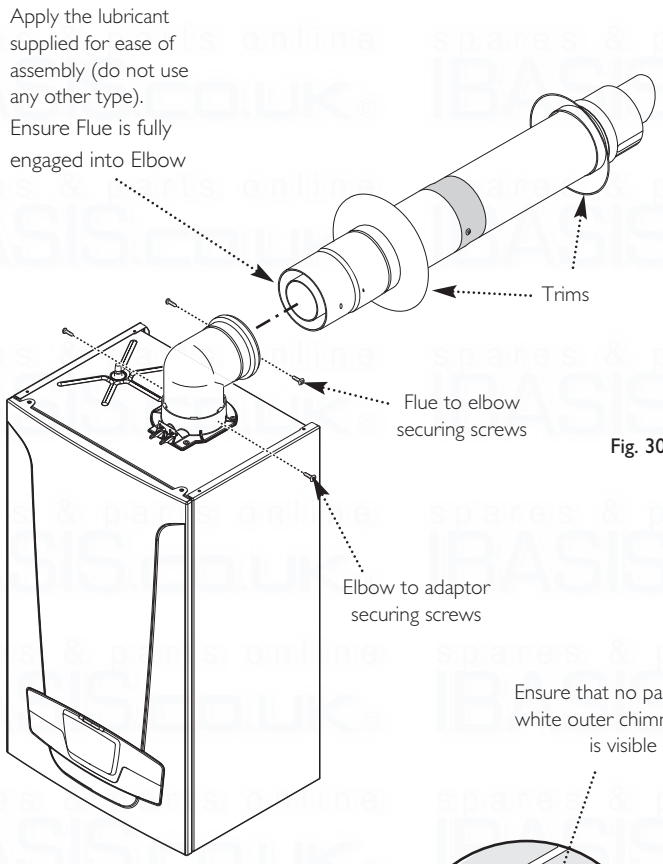

Fig. 30

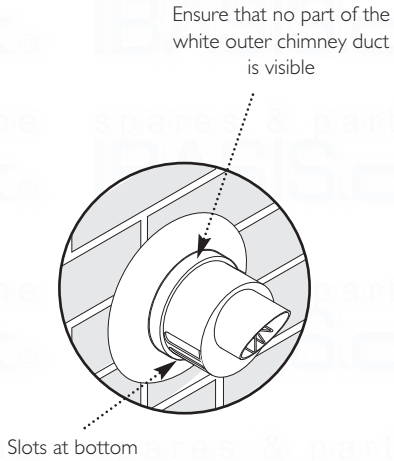

Fig. 31

9.7 Fitting the Flue (Cont)

10. Remove the flue elbow and insert the flue through the hole in the wall.

11. Refit the elbow to the boiler adaptor, ensuring that it is pushed fully in (Fig. 29).

12. Two flue trims are supplied, one for internal use, the other for outside. The internal trim is packaged and identified as such - it should not be used externally.

13. It is recommended that if the internal trim is being used it is first fitted over the elbow to allow access to the securing screws and then manoeuvred into place against the wall.

14. Draw the flue back through the wall and engage it in the elbow. It may be necessary to lubricate to ease assembly of the elbow and flue (Fig. 30).

15. Ensure that the terminal is positioned with the slots to the bottom (Fig. 31). Secure the flue to the elbow with the screws supplied (Fig. 30).

16. Secure the elbow flue to the boiler adaptor with the screws supplied in the boiler fittings pack (Fig. 30).

IMPORTANT: It is essential that the flue terminal is fitted as shown to ensure correct boiler operation and prevent water entering the flue.

17. Make good between the wall and air duct outside the building, appropriate to the wall construction and fire rating.

18. If necessary fit a terminal guard (see Section 8.4).

NOTE: There must be no part of the air duct (white tube) visible outside the property.

© Baxi Heating UK Ltd 2016

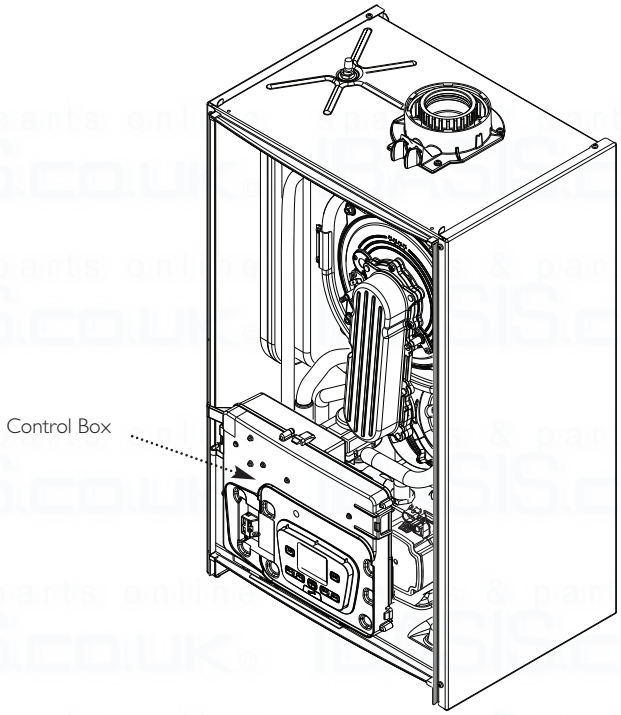

Fig. 34

9.8 Making The Electrical Connections

1. Undo the securing screws and lift the case front panel off.

2. Disengage the securing tab and hinge the control box downwards. Undo the terminal block cover securing screw and remove the cover (Fig. 34).

3. Slacken the gland nut in the left of the boiler lower panel and pass the mains cable through it. Remove the grommet adjacent to the gland nut, pierce the diaphragm and insert the cable from the external control system.

4. Leave sufficient slack in the cables to allow the Control Box to be hinged fully open. Tighten the gland nut and refit the grommet.

5. Connect the Earth, Permanent Live and Neutral wires to the terminal strip.

NOTE: Both the Permanent Live and Neutral connections are fused.

6. Refer to the instructions supplied with the external control(s).

IMPORTANT: Any thermostat **MUST** be suitable for 230V switching.

7. Remove the link between terminals 1 & 2. The 230V supply at terminal 2 must be connected to the thermostat. The switched output from the thermostat must be connected to terminal 1. (Figs. 35 & 36). If the room thermostat being used incorporates an anticipator it MUST be wired as shown in Figs. 35 & 36.

NOTE: When only Low Voltage controls are being used (connected to Terminal M2) it is still necessary to remove the link wire !

8. Replace the terminal block cover.

9. See Section 18.0 for details of fitting the Optional Outdoor Sensor.

Fig. 35

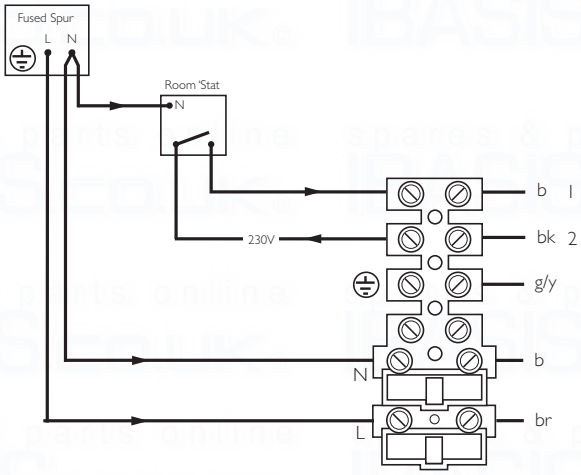

Fig. 36

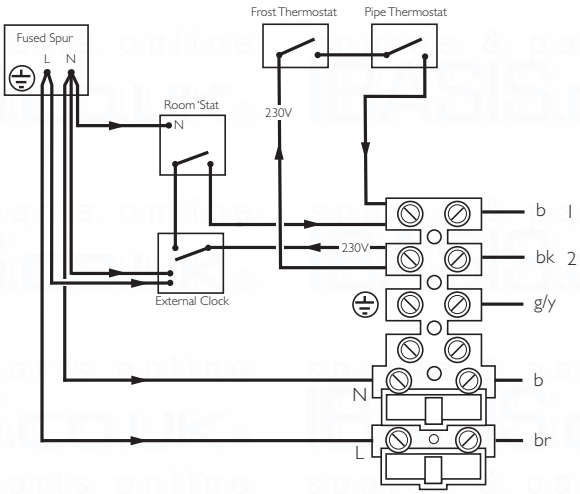

NOTE: The 230V switched signal for external controls (Frost Stat - Room Stat - Timer) must always be taken from terminal 2 at the boiler. Live, Neutral and Earth to power these controls must be taken from the Fused Spur.

9.9 Preliminary Electrical Checks

1. Prior to commissioning the boiler preliminary electrical system checks should be carried out.

2. These should be performed using a suitable meter, and include checks for Earth Continuity,
Resistance to Earth, Short Circuit and Polarity.

 © Baxi Heating UK Ltd 2016

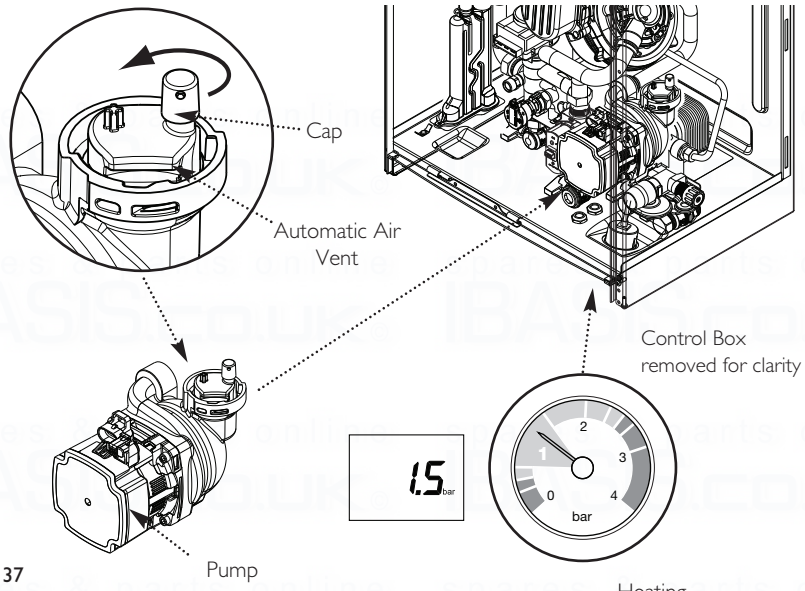

Fig. 37

Fig. 38

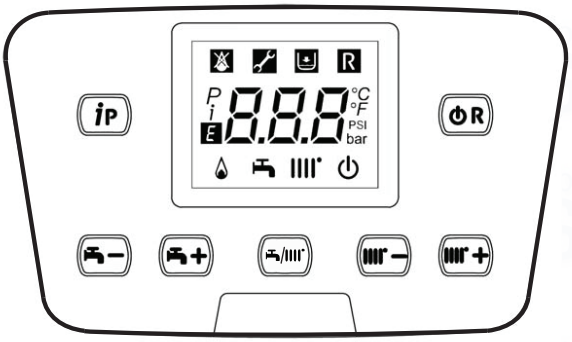

Fig. 39

Display showing Gas Type Recognition

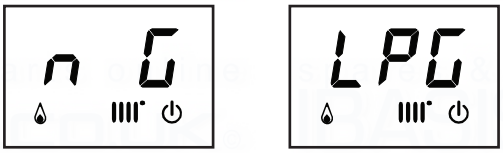

IMPORTANT: The combustion for this appliance has been checked, adjusted and preset at the factory for operation on the gas type specified on the appliance data plate. No measurement of the combustion is necessary.
Do not adjust the air/gas ratio valve.
During the Gas Type Check Function the combustion ratio will increase for a short time while the gas type is established.

FUNCTION INTERRUPTION
If either De-aeration or Gas Check is interrupted by a fault e.g. low water pressure (E118) or air in the gas supply (E128 or E133) the fault must be rectified and the function reactivated. During De-aeration, if water pressure is lost, repressurising to 1.0 bar will allow the function to continue. Whilst the Gas Type Check is being performed if water pressure is lost the function can be reactivated by repressurising then pressing iP & ▥+ together and holding for at least 6 seconds. If a gas supply fault occurs ⏻R must be pressed before iP & ▥+.

10.0 Commissioning

10.1 Commissioning the Boiler

1. Reference should be made to BS:EN 12828, 12831 & 14336 when commissioning the boiler. Ensure that the trap has been primed -see Section 9.5.3.

2. At the time of commissioning, complete all relevant sections of the Benchmark Checklist at the rear of this publication.

3. Open the mains water supply to the boiler and all hot water taps to purge the DHW system.

4. Ensure that the filling loop is connected and open, then open the heating flow and return valves on the boiler. Ensure that the cap on the automatic air vent on the pump body is opened (Fig. 37).

5. The system must be flushed in accordance with BS 7593 (see Section 6.2) and the flushing agent manufacturers instructions.

6. Pressurise the system to 1.5 bar (Fig. 38) then close and disconnect the filling loop.

7. Test for gas tightness, turn the gas supply on and purge according to in GB BS 6891 and in IE I.S. 813 "Domestic Gas Installations".

De-Aeration Function
8. When power is supplied to the boiler for the first time the software will be displayed, followed by 000. However if ⏻ is shown, press ⏻R for 2 to 4 seconds. 000 will now be displayed.

9. Press iP & ▥+ together and hold for at least 6 seconds. The 'De-Aeration' Function will be activated and 'On' displayed.

10. The boiler pump will run for up to 10 minutes during which time the diverter valve will switch between heating & hot water. This will purge air from the system. The display will show 3 12.

Gas Type Check
11. Once de-aeration is complete the boiler will go automatically to first fire-up and run at the Ignition Phase fan speed for 3 or 4 minutes to check the gas type (N.G. or Propane L.P.G.). The boiler software checks the combustion value against the set value. 000 will be displayed, alternating with a figure representing the Ignition Phase speed, e.g. '33' or '43' (Note: Each boiler model will display a different figure).

12. The boiler is factory set for Natural Gas. On a Natural Gas Supply n G will be displayed and the boiler is ready for the Inlet Pressure & Gas Rate to be checked (Section 10.2).

13. IMPORTANT - In cases where the supplied gas is Propane gas LPG will be displayed. Press iP for at least 6 seconds to confirm that this is the intended gas type for the installation.

14. IF THE BOILER IS TO BE OPERATED ON PROPANE A SUITABLE PERMANENT MARKER PEN MUST BE USED TO ALTER THE 'GAS SETTING INFORMATION' LABEL ADJACENT TO THE DATA LABEL!

15. Having checked:
- That the boiler has been installed in accordance with these instructions.
- The integrity of the flue system and the flue seals.
- The integrity of the boiler combustion circuit and the relevant seals.

Perform the combustion check.

© Baxi Heating UK Ltd 2016

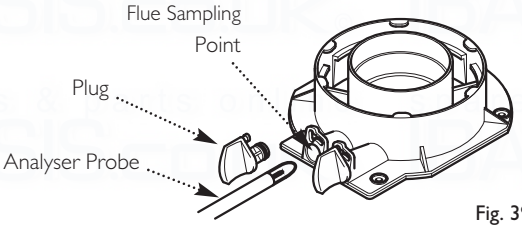

Fig. 39a

10.2 Checking the Combustion - 'Chimney Sweep' Function

1. To set the boiler to operate at MAXIMUM and MINIMUM, press iP & IIII• + together and hold for at least 6 seconds. *'On'* will be displayed briefly, followed by *'304'* then the boiler output expressed as percentage i.e. *'100'*.

2. Press IIII• – until *'00'* is displayed, indicating minimum input.

3. To exit the function press iP & IIII• + together for 6 seconds.

4. The combustion (CO level and CO/CO2 ration) must be measured and recorded at MAXIMUM DHW input and MINIMUM input.

5. Follow the flow chart on the next page to comply with the requirement to check combustion on commissioning.

6. The system MUST be cold to ensure the boiler is operating under full demand

 © Baxi Heating UK Ltd 2016

10.2 Checking the Combustion - 'Chimney Sweep' Function (cont)

1. Follow the flow chart opposite.

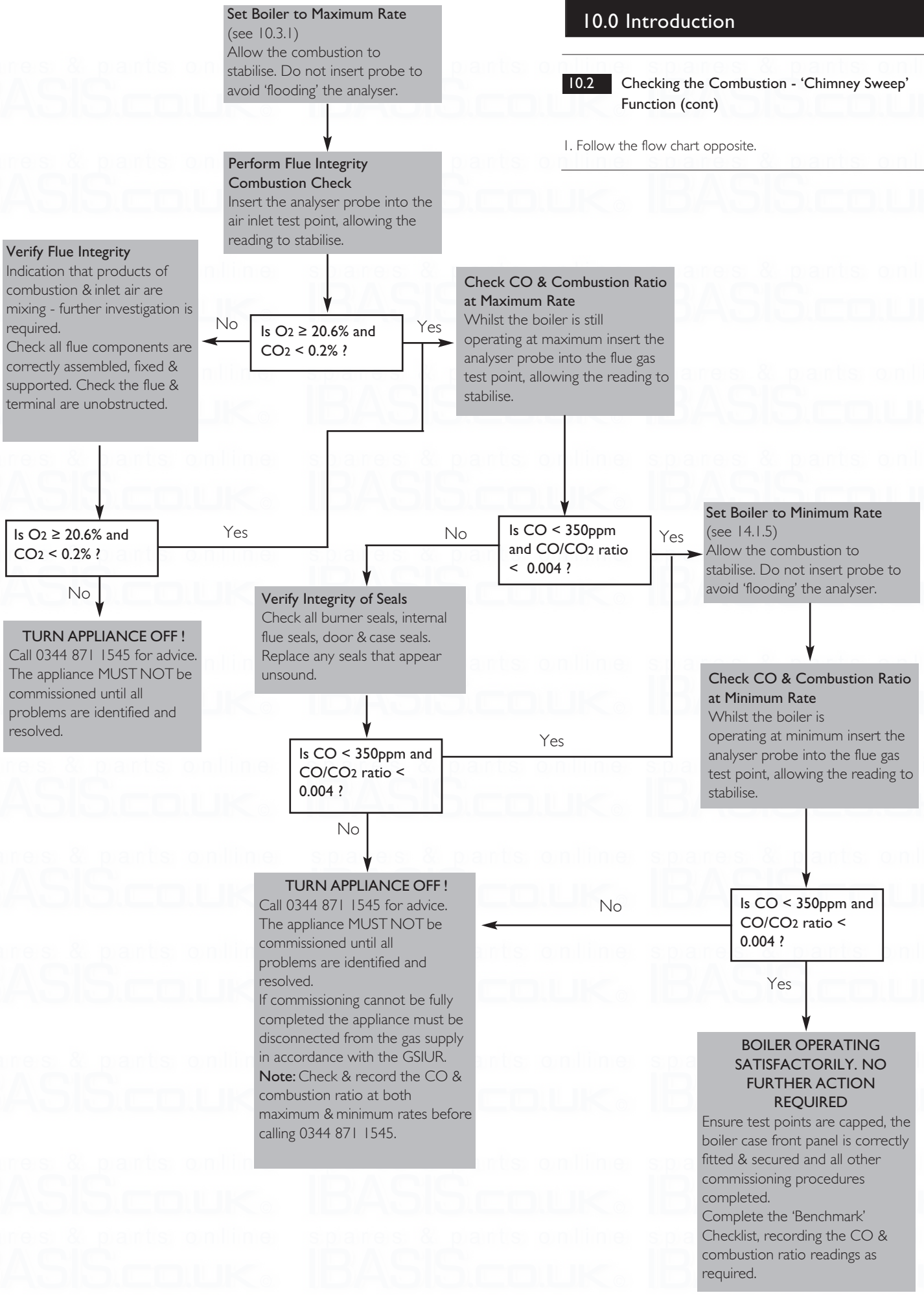

© Baxi Heating UK Ltd 2016

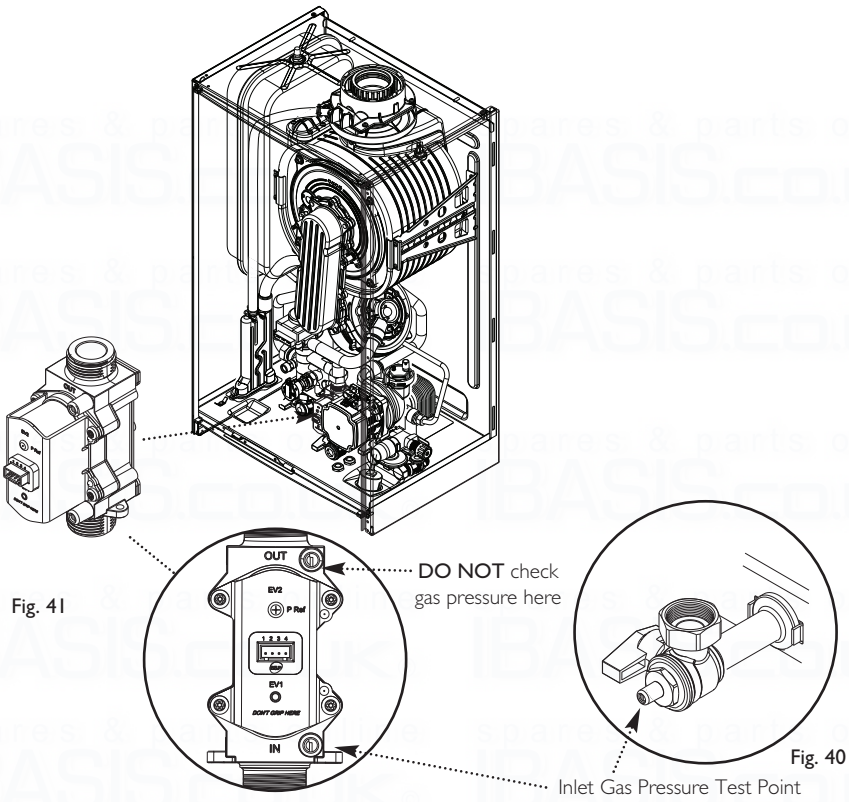

Fig. 41

Fig. 40

10.3 Check the Operational (Working) Gas Inlet Pressure & Gas Rate

Note: The system MUST be cold to ensure the boiler is operating under full demand. To obtain an accurate measurement on smaller capacity systems it may be necessary to open one or more hot taps in order to maintain the boiler at full rate.

1. Press i P & IIII+ together and hold for at least 6 seconds. 'On' will be displayed briefly, followed by '304' then '100' when the boiler is lit, indicating the CH output is at MAXIMUM ('Chimney Sweep Function').

2. With the boiler operating in the maximum rate condition check that the operational (working) gas pressure at the inlet gas pressure test point on the gas cock or valve is in accordance with B.S. 6798 & B.S. 6891. This must be AT LEAST 17mb ! (LPG - 37mb)

3. Ensure that this inlet pressure can be obtained with all other gas appliances in the property working.

Measure the Gas Rate

4. With any other appliances & pilot lights turned OFF the gas rate can be measured. It should be:-

Natural Gas	24 model	2.61 m³/h
	28 model	3.05 m³/h
	33 model	3.59 m³/h
	40 model	4.35 m³/h
Propane	24 model	1.96 kg/h
	28 model	2.29 kg/h
	33 model	2.70 kg/h
	40 model	3.27 kg/h

5. Press i P & IIII+ together and hold for at least 6 seconds to exit the function.

6. Carefully read and complete all sections of the Benchmark Commissioning Checklist at the rear of this publication that are relevant to the boiler and installation. These details will be required in the event of any warranty work. The publication must be handed to the user for safe keeping and each subsequent regular service visit recorded.

7. For IE, it is necessary to complete a "Declaration of Conformity" to indicate compliance with I.S. 813. An example of this is given in I.S. 813 "Domestic Gas Installations". This is in addition to the Benchmark Commissioning Checklist.

Working Gas Pressures

If the pressure drops are greater than shown a problem with the pipework or connections is indicated. Permissible pressure drop across this system ≤ 1 mbar.

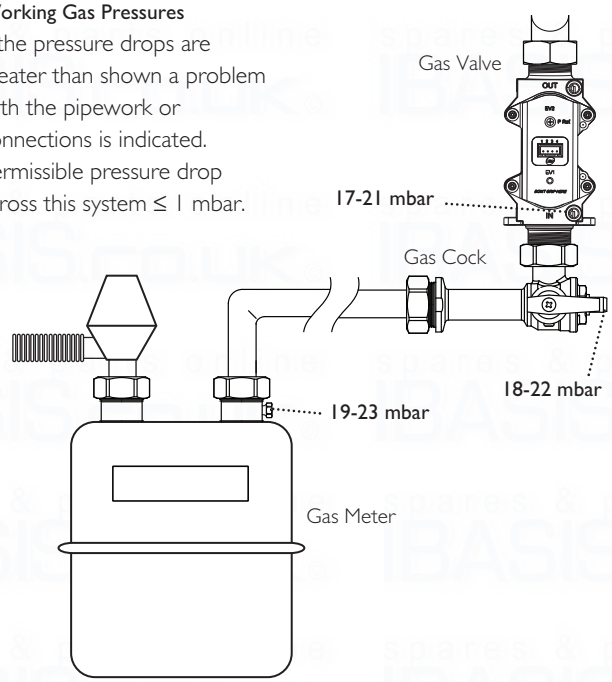

Changing the Gas Type

1. It may be necessary to adjust the boiler gas type if the supply is changed, for example when Natural Gas is provided to a rural area previously reliant on Propane. In these instances a replacement Gas Type Label may be required, which is available on request as a spare part.

2. Press IIII− & IIII+ and hold for at least 6 seconds. P 01 will be displayed, alternating with 00.

3. Press IIII+ to select the next parameter P 02. Press i P.

4. Press IIII− or IIII+ to select the value that corresponds with the required gas type. For Natural Gas:- 00
For Propane:- 01

5. Press i P to save the change, then ⏻ R to return to the normal display.

Gas Type Label

N.G. Factory Set

GAS SETTING INFORMATION	
Set for use with NG (2H – G20 – 20mbar)	☒
Set for use with LPG (3P – G31 – 37mbar)	☐

When reset for L.P.G.

GAS SETTING INFORMATION	
Set for use with NG (2H – G20 – 20mbar)	☐
Set for use with LPG (3P – G31 – 37mbar)	☒

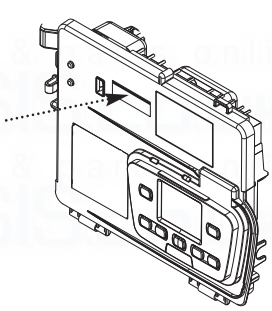

 © Baxi Heating UK Ltd 2016

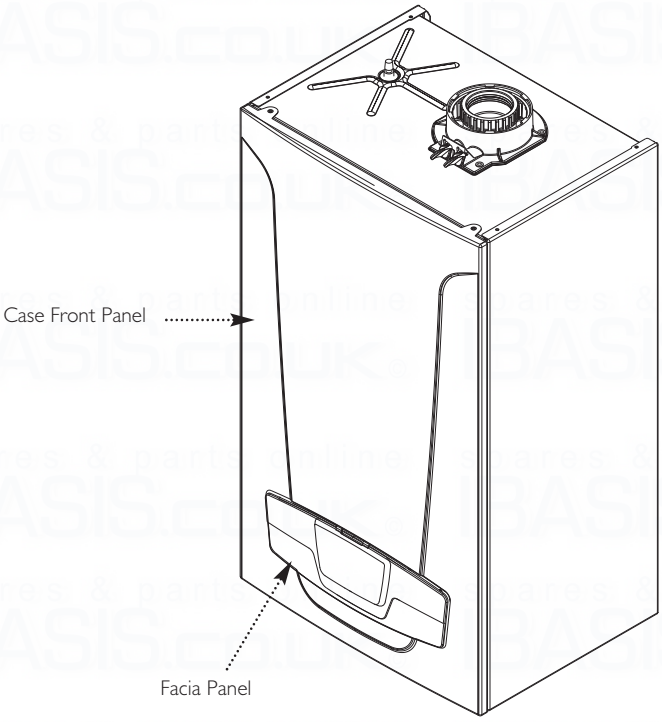

Fig. 42

To change the information displayed see the table below:-

The i P button can be pressed so that the display shows the following information:-

1 press - '00' alternates with Sub-Code (only when fault on boiler) or '000'
2 presses - '01' alternates with CH Temperature
3 presses - '02' alternates with Outside Temperature (where Sensor fitted)
4 presses - '03' alternates with DHW Temperature
5 presses - '04' alternates with DHW Temperature
6 presses - '05' alternates with System Water Pressure
7 presses - '06' alternates with Return Temperature
8 presses - '04' alternates with Flue Temperature
9 presses - '05' alternates with Heat Exchanger Temperature

11.1 Completion

1. Replace the case front panel, and secure with the screws previously removed.

2. This publication must be handed to the user for safe keeping and each subsequent regular service visit recorded.

3. Set the central heating and hot water temperatures to the requirements of the user. Instruct the user in the operation of the boiler and system.

4. Instruct the user in the operation of the boiler controls. Hand over the User's Operating, Installation and Servicing Instructions, giving advice on the necessity of regular servicing.

5. Demonstrate to the user the action required if a gas leak occurs or is suspected. Show them how to turn off the gas supply at the meter control, and advise them not to operate electric light or power switched, and to ventilate the property.

6. Show the user the location of the system control isolation switch, and demonstrate its operation.

7. Advise the user that they may observe a plume of vapour from the flue terminal, and that it is part of the normal operation of the boiler.

11.2 System Draining

1. If at any time after installation it is necessary to drain the central heating system (e.g. after replacing a radiator) the De-Aeration Function should be activated.

2. On refilling the system ensure that there is no heating or hot water demand, but that there is power to the boiler.

3. Press i P & IIII – together and hold for at least 6 seconds. The 'De-Aeration' Function will be activated.

4. The boiler pump will run for up to 10 minutes during which time the diverter valve will switch between heating & hot water. This will purge air from the system. The display will show 3 12.

5. Once De-Aeration is complete set the external controls as required by the user.

© Baxi Heating UK Ltd 2016

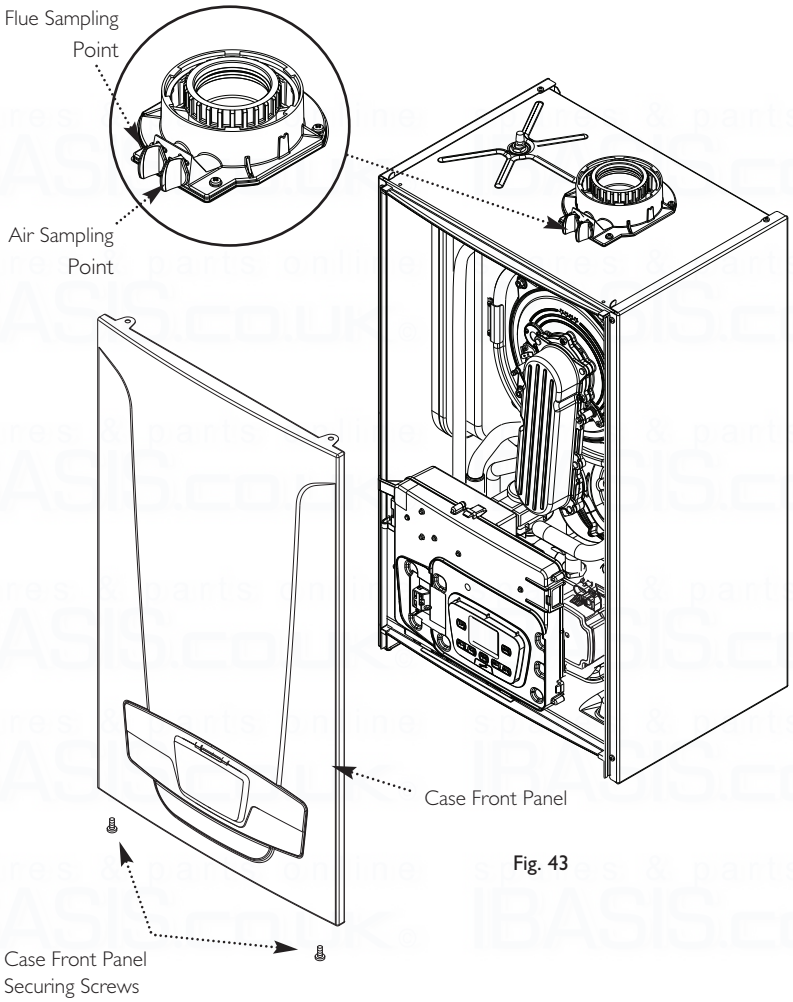

Fig. 43

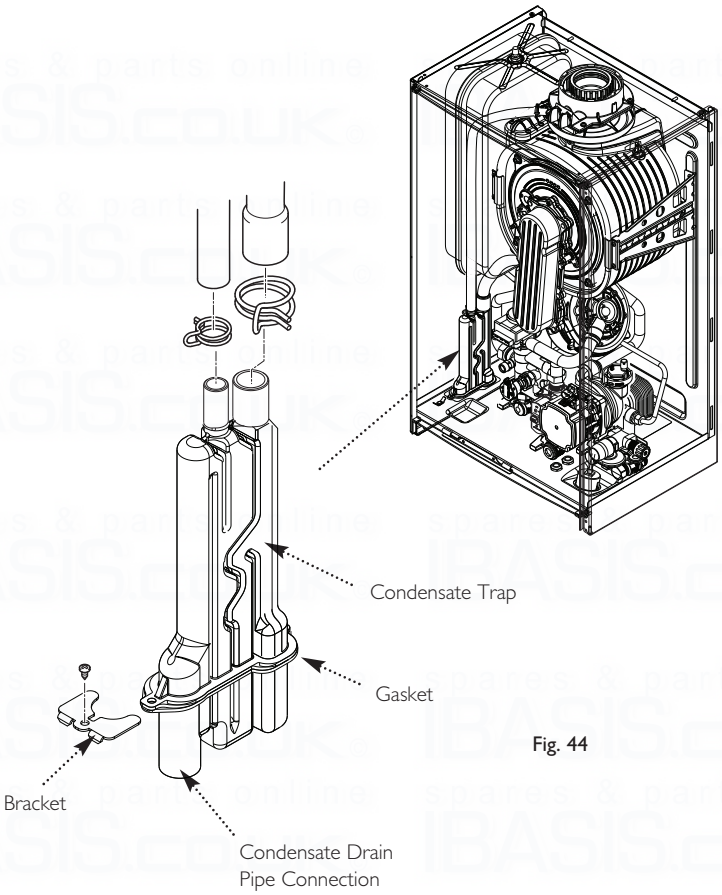

Fig. 44

12.0 Servicing

12.1 Performance Safety Check & Annual Servicing

1. For reasons of safety and economy, it is recommended that the boiler is serviced annually. Servicing must be performed by a competent person in accordance with B.S. 7967-4.

2. After servicing, complete the relevant Service Interval Record section of the Benchmark Commissioning Checklist at the rear of this publication.

IMPORTANT: During routine servicing, and after any maintenance or change of part of the combustion circuit, the following must be checked:-
- The integrity of the complete flue system and the flue seals (check air inlet sample).
- The integrity of the boiler combustion circuit and relevant seals as described in Section 12.2.
- The operational gas inlet pressure as described in Section 10.2.1 to 10.2.7 and the gas rate as described in 10.2.8.
- The combustion performance as described in **'Check the Combustion Performance'** (12.1.4 to 12.1.6 below).

3. **Competence to carry out Checking Combustion Performance**
B.S. 6798 'Specification for Installation & Maintenance of Gas Fired Boilers not exceeding 70kW' advises that:-

- The person carrying out a combustion measurement should have been assessed as competent in the use of a flue gas analyser and the interpretation of the results.
- The flue gas analyser used should be one meeting the requirements of BS7927 or BS-EN50379-3 and be calibrated in accordance with the analyser manufacturers' requirements.
- Competence can be demonstrated by satisfactory completion of the CPA1 ACS assessment, which covers the use of electronic portable combustion gas analysers in accordance with BS 7967, Parts 1 to 4.

Check the Combustion Performance (CO/CO_2 ratio)
4. Set the boiler to operate at maximum rate as described in Section 14.1.1 to 14.1.6.

5. Remove the plug from the flue sampling point, insert the analyser probe and obtain the CO/CO_2 ratio. **This must be less than 0.004**.

6. If the combustion reading (CO/CO_2 ratio) is greater than this, and the integrity of the complete flue system and combustion circuit seals has been verified, and the inlet gas pressure and gas rate are satisfactory either:
- Perform the 'Annual Servicing - Inspection' (Section 12.2) & re-check.
- Perform the Combustion & Calibration functions (Section 14.0) & re-check.
- Replace the gas valve (Section 13.23) & re-check.

12.2 Annual Servicing - Inspection

1. **Ensure that both the gas and electrical supplies to the boiler are isolated and that the boiler is cool.**

2. Remove the screws securing the case front panel. Lift the panel slightly to disengage it from the studs on top of the case (Fig. 43) and hinge down the Control Box.

3. Disconnect the two pipes from the top of the condensate trap and the drain pipe from the condensate drain pipe connection. Undo the screw securing the bracket and trap to the boiler lower panel (Fig. 44).

4. Remove the trap. Take care not to spill any residual condensate on the controls and P.C.B. Thoroughly rinse the trap and examine the gasket on the trap base, replacing if necessary.

 © Baxi Heating UK Ltd 2016

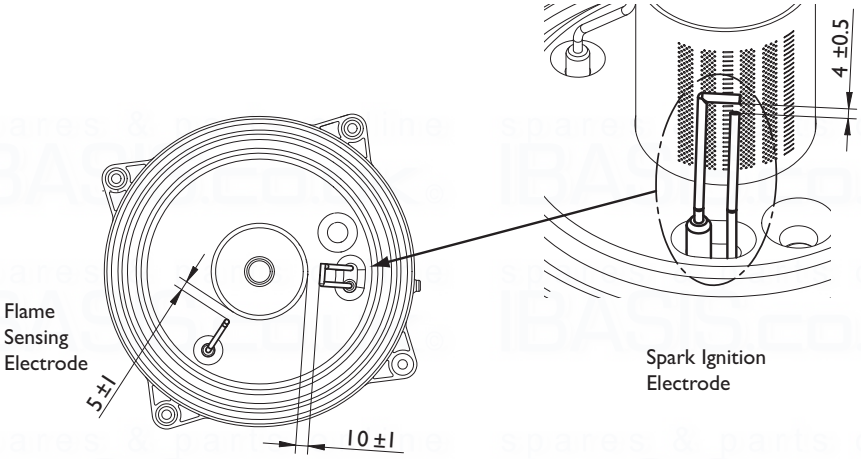

Electrode Position

Fig. 45

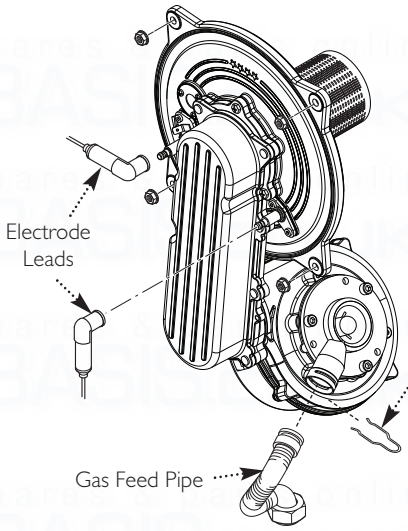

Fig. 46

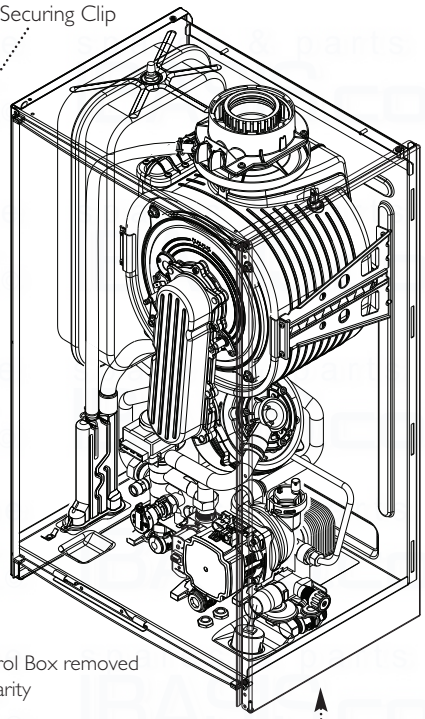

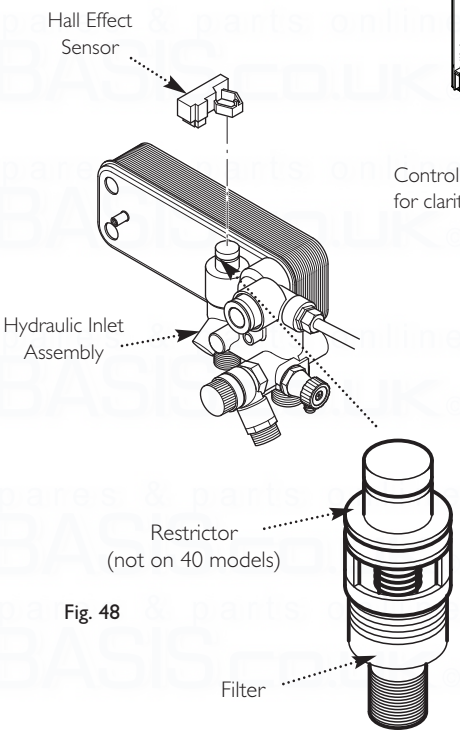

Fig. 48

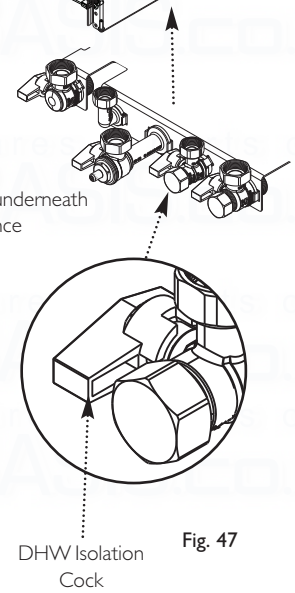

Fig. 47

12.2 Annual Servicing Inspection (Cont)

5. Remove the clip securing the gas feed pipe to the air/gas venturi. Disconnect the pipe. Do not break the joint between the pipe and gas valve unless necessary.

6. Disconnect the electrode leads, noting their position, and the fan electrical plugs (Fig. 46).

7. Undo the four nuts retaining the combustion box cover to the heat exchanger.

8. Carefully draw the fan, collector and cover assembly forward (Figs. 46).

9. Clean any debris from the heat exchanger and check that the gaps between the tubes are clear.

10. Inspect the burner, insulation and position & condition of the electrodes, cleaning or replacing if necessary. Clean any dirt or dust from the air box.

11. Carefully examine all seals & gaskets, replacing as necessary. Look for any evidence of leaks or corrosion, and if found determine & rectify the cause.

12. Reassemble in reverse order, ensuring the front case panel is securely fitted.

DHW Filter & Turbine Assy. (Fig. 48)

13. If the flow of domestic hot water is diminished, it may be necessary to clean the filter. In areas of harder water it is recommended that this is performed annually.

14. Turn the DHW isolation cock (Fig. 47) off and draw off from a hot tap.

15. Remove the retaining clip and extract the filter cartridge and rinse thoroughly in clean water. Reassemble and check the flow. Ensure that the turbine spins freely.

16. Recommission the boiler as described in Section 10.0.

17. Complete the relevant Service Interval Record section of the Benchmark Commissioning Checklist at the rear of this publication and then hand it back to the user.

© Baxi Heating UK Ltd 2016

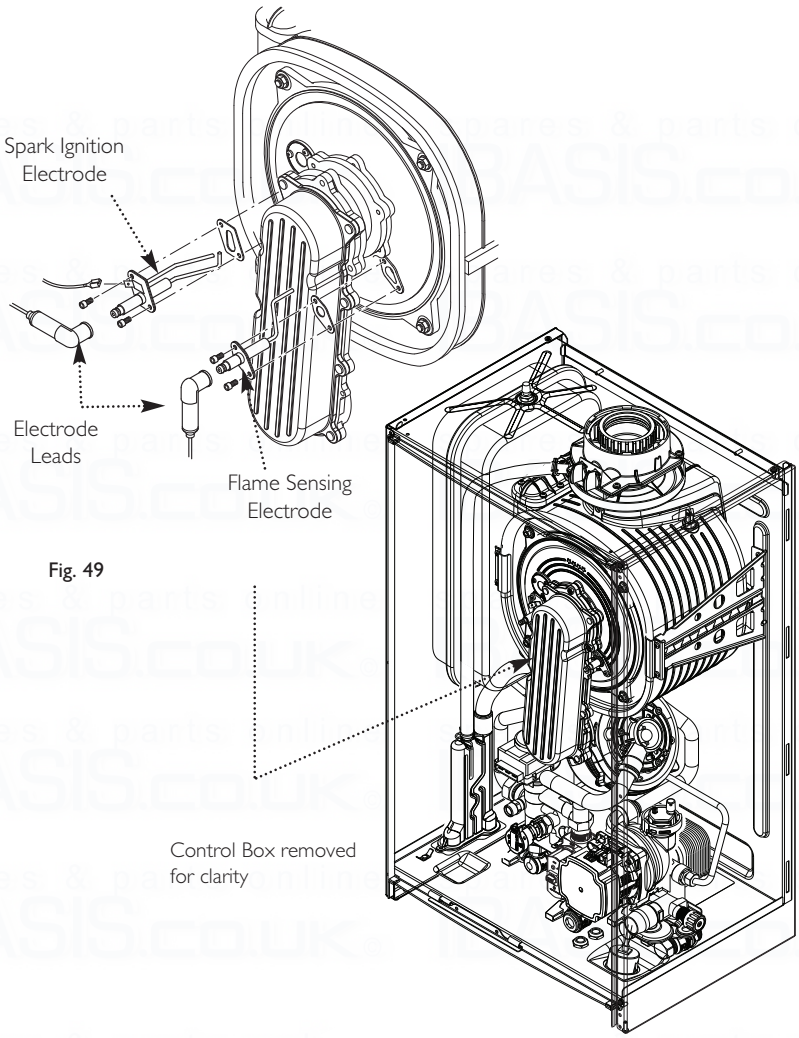

Fig. 49

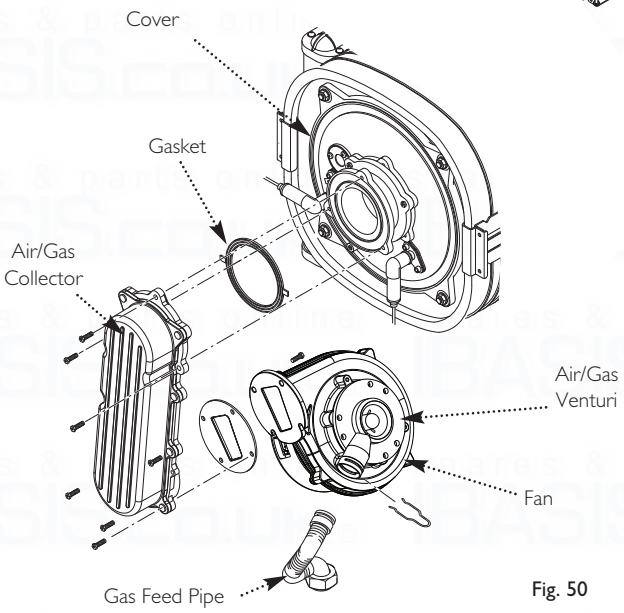

Fig. 50

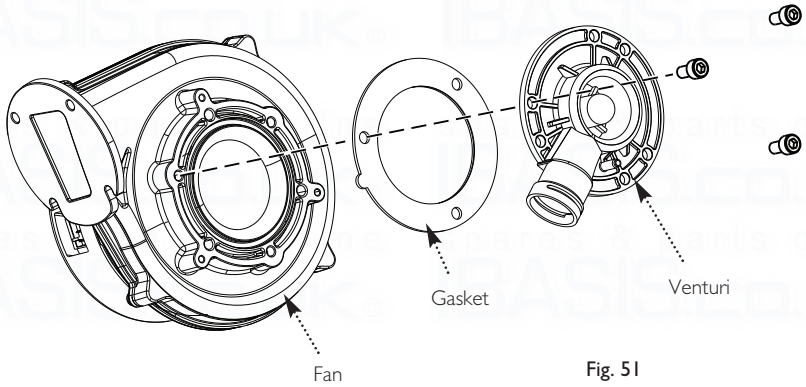

Fig. 51

13.0 Changing Components

IMPORTANT: When changing components ensure that both the gas and electrical supplies to the boiler are isolated before any work is started. When the component has been changed recommission the boiler as described in Section 10.0. Always examine any seals or gaskets, replacing where necessary. The Case Front Panel MUST seal effectively against the air box side panels.

See Section 12.1 "Annual Servicing" for removal of case panel, door etc.

13.1 Spark Ignition and Flame Sensing Electrodes (Fig. 49)

1. Disconnect the electrode leads, noting their positions.

2. Remove the retaining screws securing each of the electrodes to the combustion box cover and remove the electrodes.

3. Check the condition of the sealing gaskets and replace if necessary. Reassemble in reverse order.

4. After changing the Flame Sensing Electrode check the combustion - see Section 14.1.

5. When satisfactory combustion readings are not obtained ensure the electrode position is correct and perform the combustion check again.

13.2 Fan (Fig. 50)

1. Remove the clip securing the gas feed pipe to the air/gas venturi. Disconnect the pipe.

2. Undo the screws securing the air/gas collector to the cover (33/40) or extension piece (24/28) and disconnect the fan electrical plugs.

3. Remove the collector and fan assembly, being careful to retain the gasket.

4. Undo the screws securing the fan to the collector. Retain the gasket.

5. Undo the screws securing the venturi to the fan (noting its position) and transfer to the new fan, replacing the seal if necessary.

6. Examine the gasket(s) and replace if necessary.

7. Reassemble in reverse order and perform the Calibration Function - see Section 14.2.

13.3 Air/Gas Venturi (Figs. 50 & 51)

1. Remove the clip securing the gas feed pipe to the venturi.

2. Undo the screws securing the collector to the cover (33/40) or extension piece (24/28) and disconnect the fan electrical plugs.

3. Remove the collector and fan assembly, being careful to retain the gasket.

4. Undo the screws securing the venturi to the fan (noting its position) and fit the new venturi, replacing the seal if necessary.

5. Examine the gasket and replace if necessary.

6. After changing the venturi check the combustion - see Section 14.1.

 © Baxi Heating UK Ltd 2016

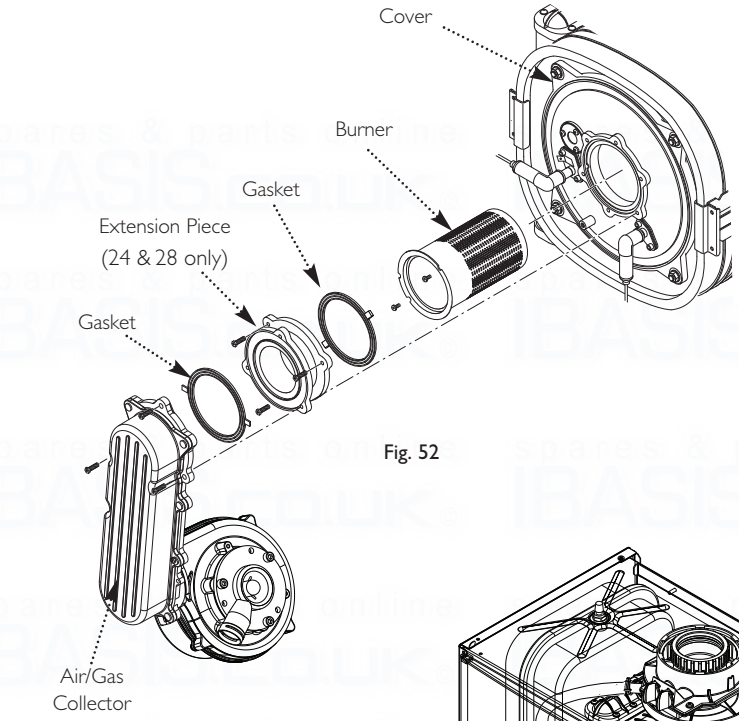

Fig. 52

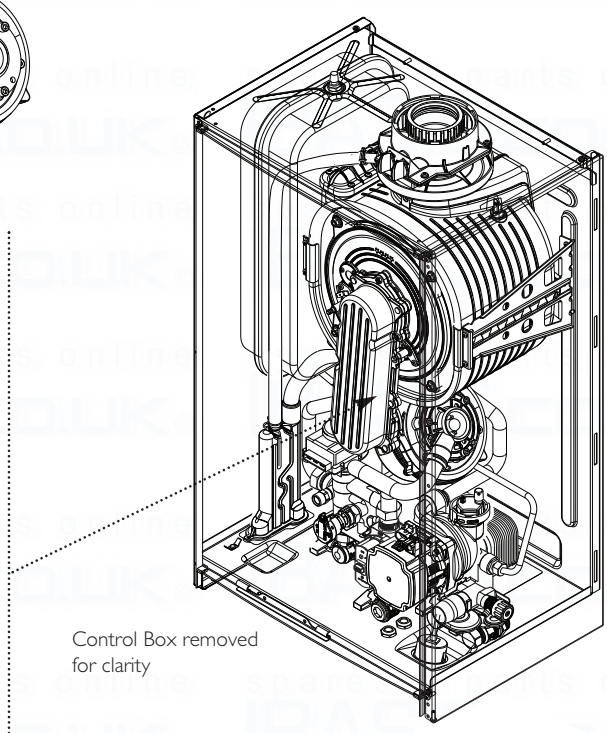

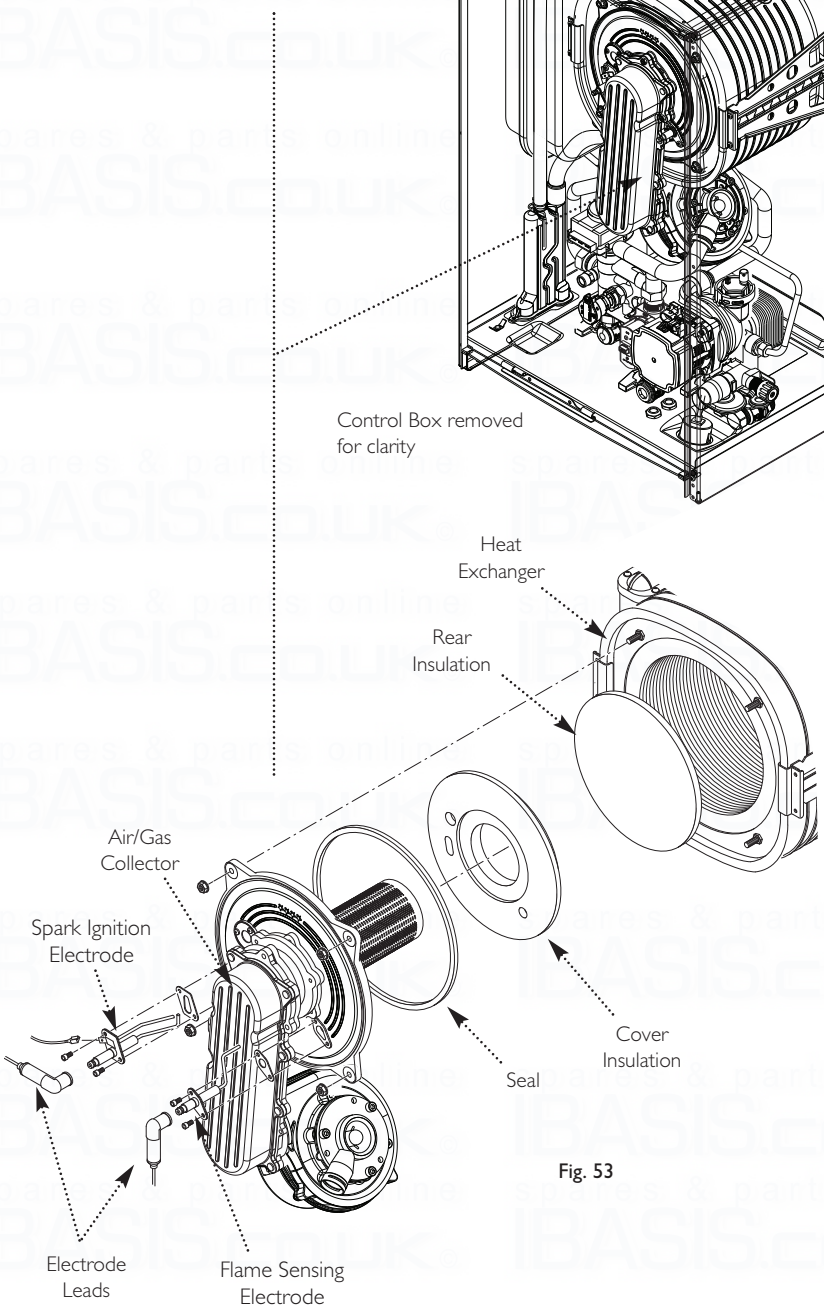

Fig. 53

13.0 Changing Components

13.4 Burner (Fig. 52)

1. Undo the securing screw and remove the airbox, disengaging it from the fan venturi. Remove the clip securing the gas feed pipe to the air/gas venturi and disconnect the fan electrical plugs.

2. Undo the screws securing the air/gas collector to the extension piece. Note its position and remove the extension piece (where fitted) from the cover.

3. Undo the screws securing the burner. Withdraw the burner from the cover and replace with the new one.

4. Examine the gasket(s), replacing if necessary. Note that the gaskets are not the same !

5. After changing the burner check the combustion - see Section 14.1.

13.5 Insulation (Fig. 53)

1. Remove the clip securing the gas feed pipe to the air/gas venturi and disconnect the fan electrical plugs.

2. Remove the electrodes as described in section 13.1.

3. Undo the nuts holding the cover to the heat exchanger. Draw the air/gas collector, fan and cover assembly away.

4. Remove the cover insulation piece.

5. Fit the new insulation carefully over the burner and align it with the slots for the electrodes.

6. If the rear insulation requires replacement, remove it and all debris from the heat exchanger. Also it may be necessary to separately remove the spring clip from the pin in the centre of the heat exchanger and the 'L' shaped clips embedded in the insulation.

7. Do not remove the shrink-wrapped coating from the replacement rear insulation. Keep the insulation vertical and press firmly into position.

8. Examine the cover seal and replace if necessary. Reassemble in reverse order.

© Baxi Heating UK Ltd 2016

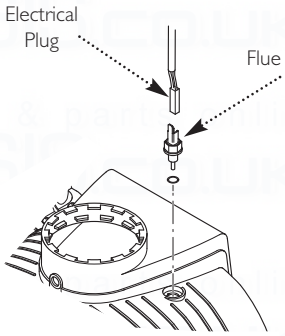

Fig. 54

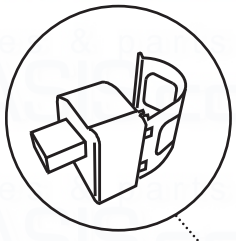

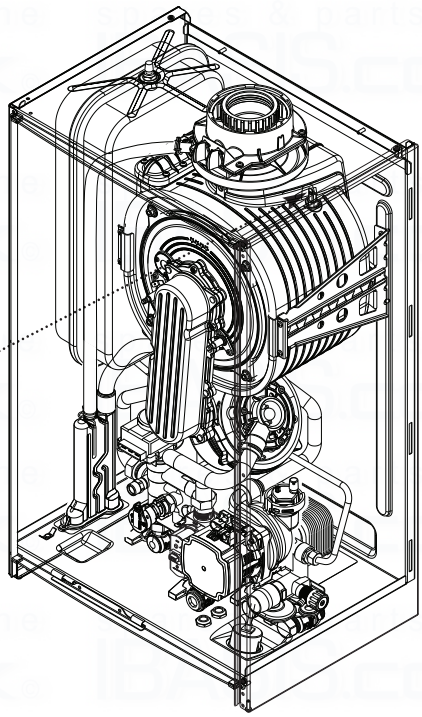

Heating Flow Sensor

Control Box removed for clarity

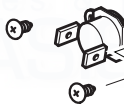

Safety Thermostat

Fig. 55

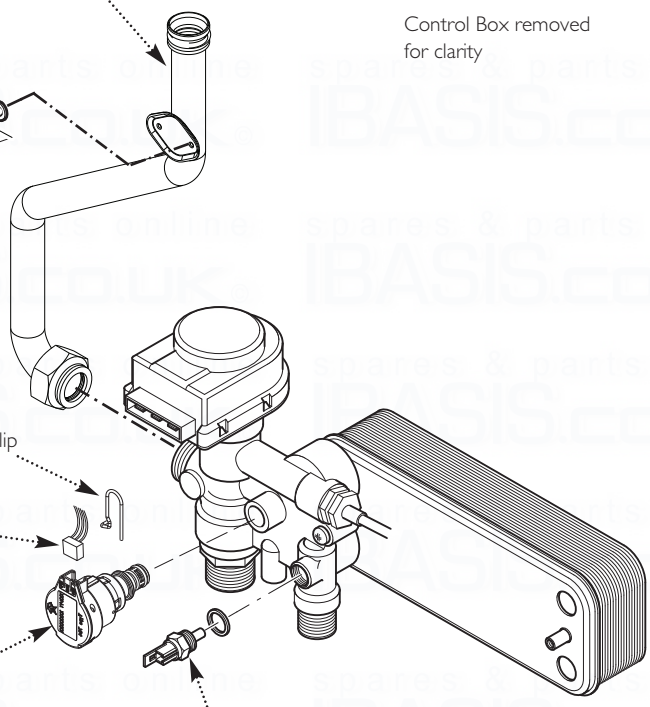

Pump, Gas Valve Assemblies and Pipework removed for clarity

Fig. 56

13.6 Flue Sensor (Fig. 54)

1. Ease the retaining tab on the sensor away and disconnect the electrical plug.

2. Turn the sensor 90° anticlockwise to remove - it is a bayonet connection.

3. Reassemble in reverse order.

13.7 Heating Flow & Return Sensors (Fig. 55)

1. There is one sensor on the flow (red wires) and one sensor on the return (blue wires).

2. After noting the position prise the sensor clip off the pipe and disconnect the plug.

3. Connect the plug to the new sensor and ease the clip onto the pipe as close to the heat exchanger as possible.

13.8 Safety Thermostat (Fig. 55)

1. Pull the terminals off the safety thermostat.

2. Remove the screws securing the thermostat to the mounting plate on the flow pipe.

3. Reassemble in reverse order, ensuring that the terminals are pushed fully on.

13.9 DHW NTC Sensor (Fig. 56)

1. Turn off the mains cold water supply tap and draw off the residual domestic hot water.

2. Ease the retaining tab on the sensor away and disconnect the electrical plug.

3. Unscrew the sensor from the hydraulic outlet assembly. Examine the sealing washer, replacing if necessary.

4. Reassemble in reverse order. The plug will only fit one way.

13.10 Hydraulic Pressure Sensor (Fig. 56)

1. Close the flow and return isolation taps and drain the primary circuit.

2. Disconnect the plug from the sensor.

3. Prise off the spring clip and remove the sensor. Examine the 'O' ring, replacing if necessary.

4. Reassemble in reverse order.

 © Baxi Heating UK Ltd 2016

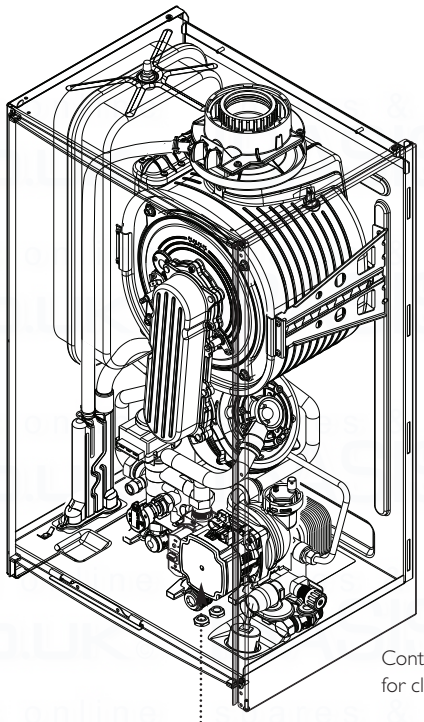

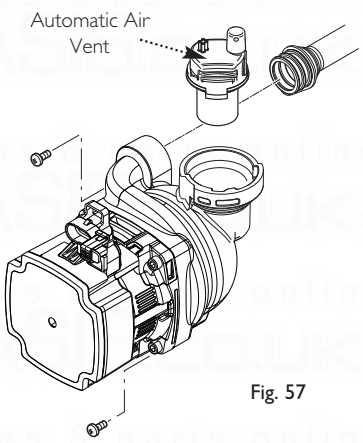

Fig. 57

Grundfos Pump

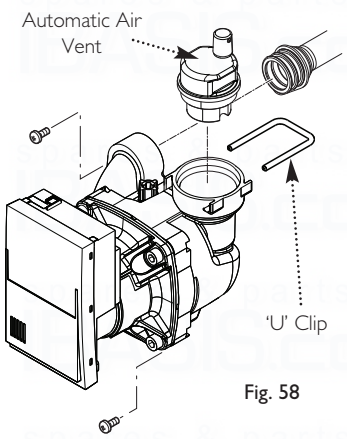

Fig. 58

Wilo Pump

13.11 Pump - Complete (Figs. 57 & 58)

1. Drain the boiler primary circuit and disconnect the electrical plug from the pump motor.

2. Undo the two screws securing the body to the pipe and manifold and draw the pump forwards.

3. Examine the 'O' ring seals on the return pipe and manifold, replacing if necessary.

4. Reassemble in reverse order.

13.12 Automatic Air Vent - Grundfos (Fig. 57)

1. Drain the boiler primary circuit and unscrew the automatic air vent from the pump body.

2. Examine the 'O' ring seal, replacing if necessary, and fit it to the new automatic air vent.

3. Reassemble in reverse order.

13.13 Automatic Air Vent - Wilo (Fig. 58)

1. Drain the boiler primary circuit and remove the 'U' clip securing the automatic air vent to the pump body.

2. Pull the vent upwards away from the body.

3. Examine the 'O' ring seal, replacing if necessary, and fit it to the new automatic air vent.

4. Reassemble in reverse order.

© Baxi Heating UK Ltd 2016

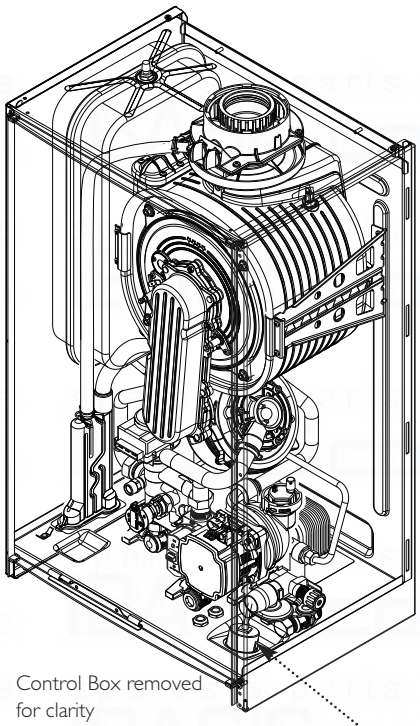

13.14 Hall Effect Sensor (Fig. 59)

1. Ease the sensor upwards off the hydraulic inlet manifold assembly.

2. Disconnect the electrical plug from the sensor.

3. Connect the plug to the new sensor. Carefully fit the new sensor to the hydraulic assembly, ensuring it is fully down.

13.15 Safety Pressure Relief Valve (Fig. 60)

1. Close the flow and return isolation taps and drain the primary circuit.

2. Disconnect the discharge pipework from the valve. Remove the sealing grommet.

3. Slacken the grub screw securing the pressure relief valve and remove from the inlet assembly.

4. On reassembly ensure that the 'O' ring is in place and the sealing grommet is correctly refitted to maintain the integrity of the case seal.

13.16 Heating Pressure Gauge (Figs. 61 & 61a)

1. Close the flow and return isolation taps and drain the primary circuit.

2. Remove the gauge from the boiler lower panel.

3. Remove the clip securing the pressure gauge capillary.

4. Fit the new gauge, ensuring that the capillary is routed to prevent any sharp bends. Reassemble in reverse order and ensure the gauge is firmly in position to maintain the integrity of the case seal.

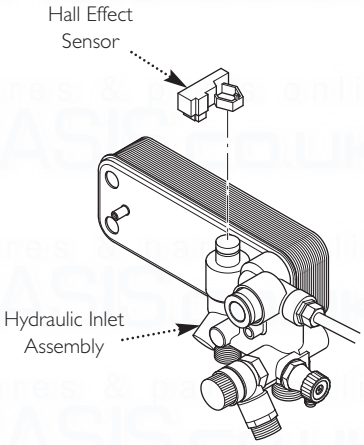

Fig. 59

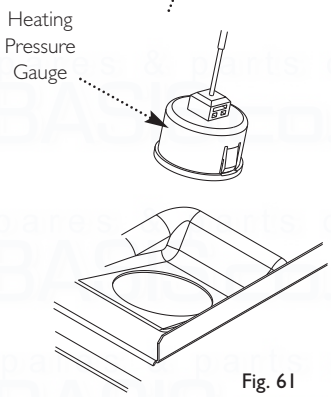

Fig. 61

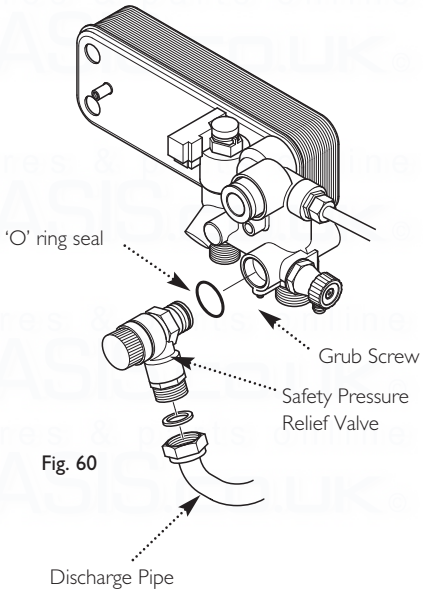

Fig. 60

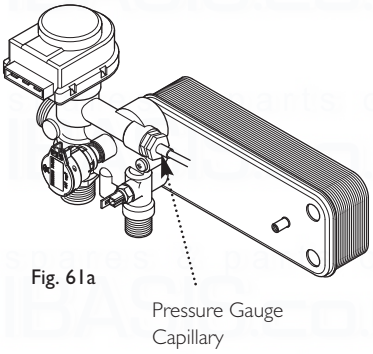

Fig. 61a

 © Baxi Heating UK Ltd 2016

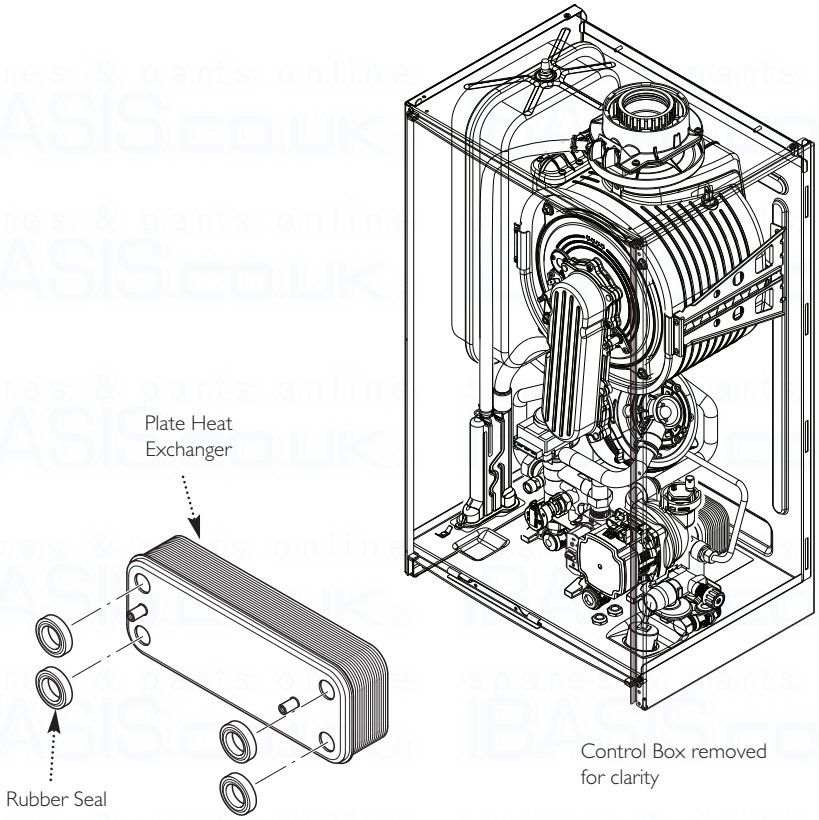

Fig. 62

13.17 Plate Heat Exchanger (Fig. 62)

1. Close the flow & return isolation taps and the cold mains inlet. Drain the primary circuit and draw off any residual DHW.

2. Remove the gas valve as described in Section 13.20. and disconnect the pressure gauge capillary.

3. Undo the screws securing the plate heat exchanger to the hydraulic inlet & outlet assemblies

4. Withdraw the plate heat exchanger upwards and remove.

Seals

5. There are four rubber seals between the hydraulic assembly and heat exchanger which may need replacement.

6. Ease the seals out of the hydraulic assembly. Replace carefully, ensuring that the seal is inserted parallel and pushed fully in.

7. When fitting the new heat exchanger note that the right hand location stud is offset more towards the centre.

8. Reassemble in reverse order.

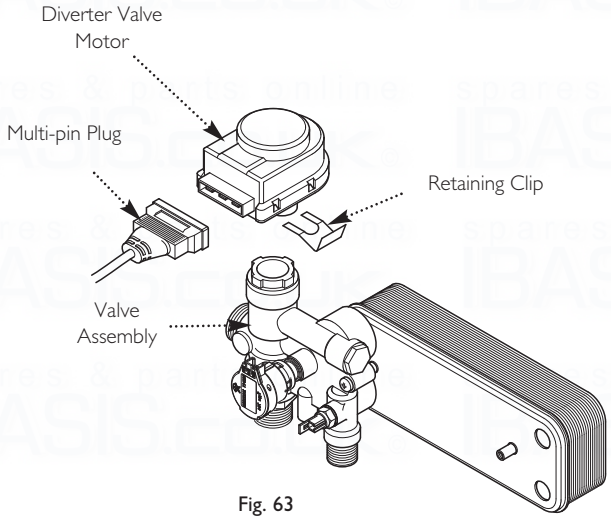

Fig. 63

13.18 Diverter Valve - Motor & Valve Assembly (Fig. 63)

1. To replace the motor, disconnect the multi-pin plug.

2. Pull off the retaining clip and remove the motor.

3. The motor can now be replaced, or the valve assembly removed.

4. Drain the primary circuit and draw off any hot water once the isolating taps are closed. Disconnect the pressure gauge capillary and h/exchanger flow pipe.

5. Undo the nuts on the tap rail under the boiler. Remove the screws securing the valve assembly to the boiler bottom panel and plate heat exchanger.

6. Remove the valve assembly. Examine all seals and washers, replacing if necessary. Transfer the DHW NTC and hydraulic pressure sensor to the new valve and reassemble in reverse order.

© Baxi Heating UK Ltd 2016

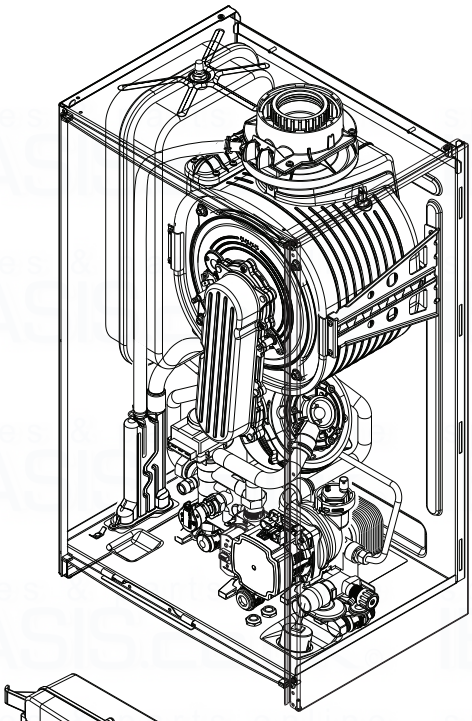

Fig. 64

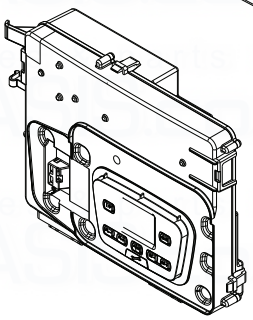

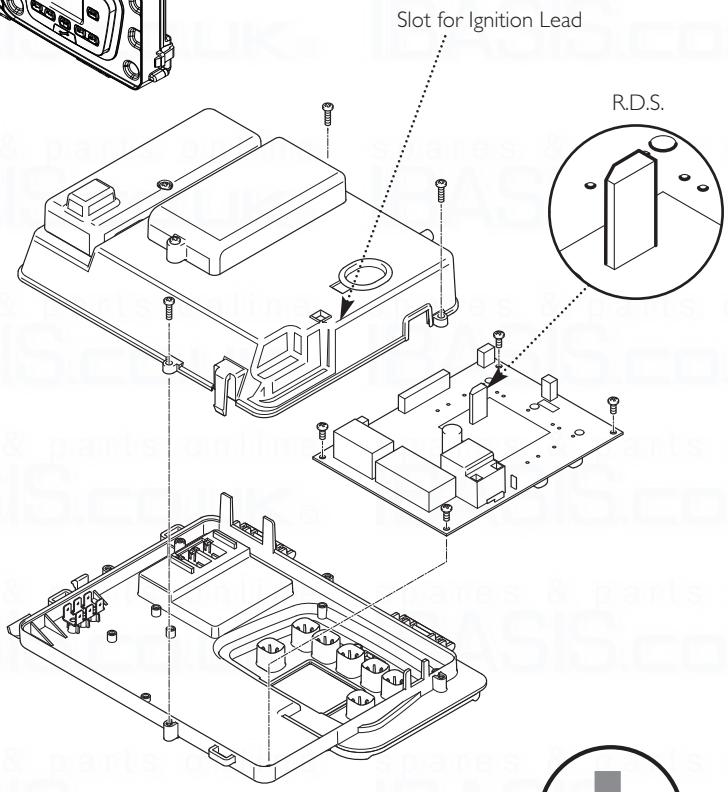

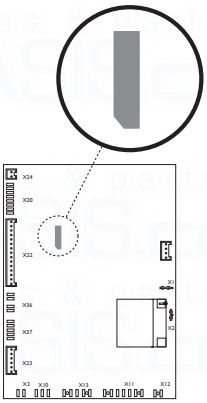

Note the correct orientation of the R.D.S. Position with the chamfer as shown.

13.19 P.C.B. & R.D.S. (Removable Data Stick) (Fig. 64)

NOTE: Both P.C.B. and R.D.S. are available as spare parts. The P.C.B. is suitable for any boiler model. An R.D.S. specific to the boiler model output & gas type will be required if the R.D.S. from the original P.C.B. is not being transferred. It is recommended that P.C.B. and R.D.S. are replaced together.

1. Ensure that the power to the boiler is isolated and wait 10 seconds.

2. Remove the screws securing the control box cover and release the cover retaining barbs from their slots.

3. Note the position of all plugs and wires on the P.C.B. and disconnect them.

4. Undo the securing screws and remove the P.C.B.

IMPORTANT: If only the P.C.B. is being replaced transfer the R.D.S. from the original board to the new one. Where both P.C.B. and R.D.S. are being replaced ensure the new R.D.S. is on new the board.

5. Reassemble in reverse order. Ensure that the ignition lead is connected correctly.

6. **P.C.B. ONLY changed** - Check the Combustion - see Section 14.1.

7. **P.C.B. & R.D.S. changed** - enable the Calibration Function as described in Section 14.2, then Check the Combustion - see Section 14.1.

 © Baxi Heating UK Ltd 2016

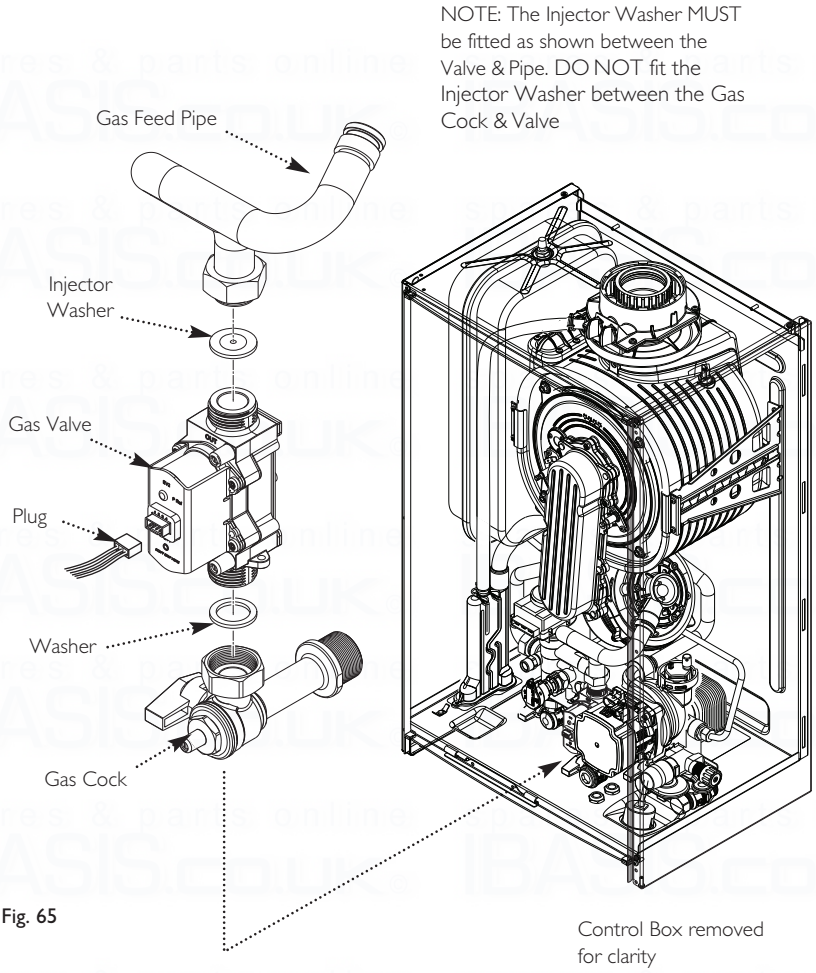

Fig. 65

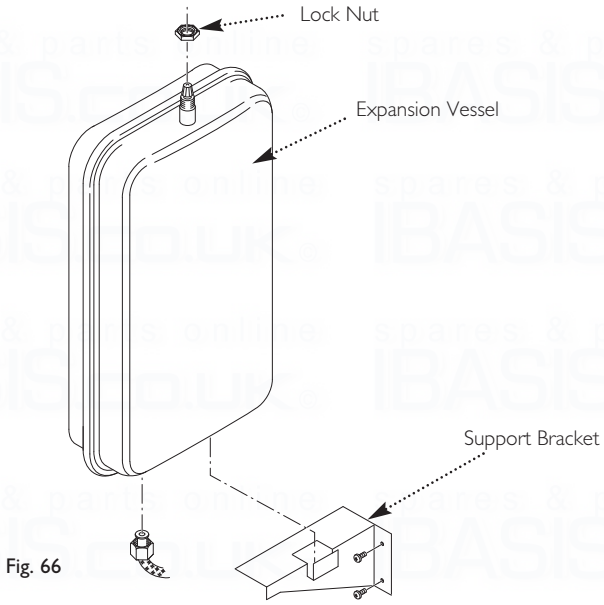

Fig. 66

13.20 Gas Valve (Fig. 65)

IMPORTANT: After replacing the valve the CO_2 must be calibrated as detailed in Section 14.0 Combustion & Calibration. Only change the valve if a suitable calibrated combustion analyser is available, operated by a competent person - see section 12.1.

1. Turn the gas cock off and undo the nut under the boiler. Retain the washer.

2. Remove the electrical plug from the valve.

3. Undo the nut on the gas feed pipe and ease the pipe aside. It is recommended that the injector washer is changed as well.

4. Remove the screws securing the gas valve to the boiler bottom panel.

5. Reassemble in reverse order, ensuring the injector washer is in place, and perform the Calibration Function & Combustion Check - see Sections 14.1 & 14.2.

NOTE: Check for gas tightness after replacing gas valve.

13.21 Expansion Vessel (Fig. 66)

1. Close the flow and return isolation taps and drain the primary circuit.

2. Undo the nut on the pipe connection at the bottom of the vessel, and slacken the nut on the hydraulic inlet assembly.

3. Remove the screws securing the support bracket, and withdraw the bracket.

4. Whilst supporting the vessel undo and remove the locknut securing the vessel spigot to the boiler top panel.

5. Manoeuvre the vessel out of the boiler.

6. Reassemble in reverse order.

© Baxi Heating UK Ltd 2016

IMPORTANT: DO NOT insert the Analyser Probe into the Test Point immediately. This will prevent saturation of the analyser.

During the Calibration Function the combustion ratio may increase for a short time while the boiler performance is optimised.

The person carrying out a combustion measurement should have been assessed as competent in the use of a flue gas analyser and the interpretation of the results.

The flue gas analyser used should be one meeting the requirements of BS7927 or BS-EN50379-3 and be calibrated in accordance with the analyser manufacturers' requirements.

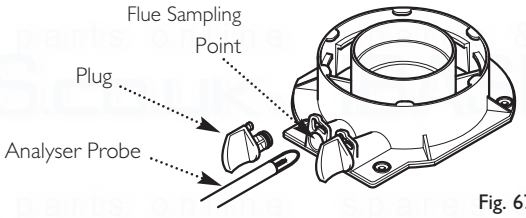

Fig. 67

14.3 Adjusting the CO^2

1. Press i P & ▮▮▮▮ + together and hold for at least 6 seconds. *'On'* will be displayed briefly, followed by *'304'* then the boiler CH output expressed as percentage i.e. *'100'*.

2. Press i P to select the adjustment function. *'0'* will alternate with *'304'*. Using the ▮▮▮▮ – & ▮▮▮▮ + buttons adjust *'0'* between *'-3'* & *'3'*.

3. Decreasing the value lowers the CO^2, and selecting a higher value will increase CO^2.

4. Once the correct CO^2 reading is achieved press i P to return to the fan speed selection.

5. Using ▮▮▮▮ – or ▮▮▮▮ + to select the next fan speed. *'00'* indicates MINIMUM speed, the other speed (Ignition Phase) will be indicated by, for example *'33'* (this varies depending on boiler model).

6. Repeat step 2. above to adjust the CO^2.at Ignition Phase and Minimum fan speeds. Press i P & ▮▮▮▮ + together and hold for at least 6 seconds to exit the function.

14.1 Checking the Combustion

1. Combustion should be:-

Natural Gas 9.0% CO^2 ± 0.7
Propane 10.5% CO^2 ± 1.0

at all 3 fan speeds:- '100' (Maximum), the Ignition Phase speed and '00'(Minimum).

2. Press i P & ▮▮▮▮ + together and hold for at least 6 seconds. *'On'* will be displayed briefly, followed by *'304'* then the boiler CH output expressed as percentage i.e. *'100'*. It may be necessary to open one or more hot taps in order to maintain the boiler at full rate.

3. Insert the analyser probe and once stabilised note the CO^2 reading.

4. Press ▮▮▮▮ – to select the Ignition Phase Speed. A value will be displayed, e.g. *'33'*. Note the CO^2 reading.

5. Press ▮▮▮▮ – again to select the Minimum Output. *'00'* will be displayed. Note the CO^2 reading.

6. If the CO^2 is not within the tolerances referred to above at any of the speeds, follow the procedure in **Section 14.3 opposite** to calibrate the boiler.

7. To exit the function press i P & ▮▮▮▮ + together for 6 seconds.

14.2 Calibration Function

IMPORTANT: Do not commence the Calibration Function whilst the burner is lit ! The case front panel MUST be fitted.

Note: To obtain an accurate measurement on smaller capacity systems it may be necessary to open one or more hot taps in order to maintain the boiler at full rate.

1. The function is activated by pressing buttons ▮▮▮▮ – and ⏻ R together for 6 seconds then quickly pressing button i P while *'On'* is displayed. The Ignition Phase fan speed code will then be displayed. Calibration will take approximately 5 minutes.

2. If *'303'* is displayed, then the Calibration Function has not been activated correctly. Isolate and reinstate all power sources to the boiler and repeat the above.

3. The boiler will automatically calibrate at *'100'*, the Ignition Phase speed then *'00'*. These represent the percentage of MAXIMUM fan speed (i.e. *'00'* is MINIMUM fan speed). Once the boiler has stabilised and self-calibrated at each fan speed the P and symbols will be displayed before the next speed is automatically set.

4. When self-calibration is complete the boiler will run at MINIMUM fan speed (*'00'* displayed). The following symbols will also be displayed ▮▮▮▮ flashing together at regular intervals.

5. To exit the function press ⏻ R . *'ESC'* will be displayed and the calibration function completed.

 © Baxi Heating UK Ltd 2016

15.1 Illustrated Wiring Diagram

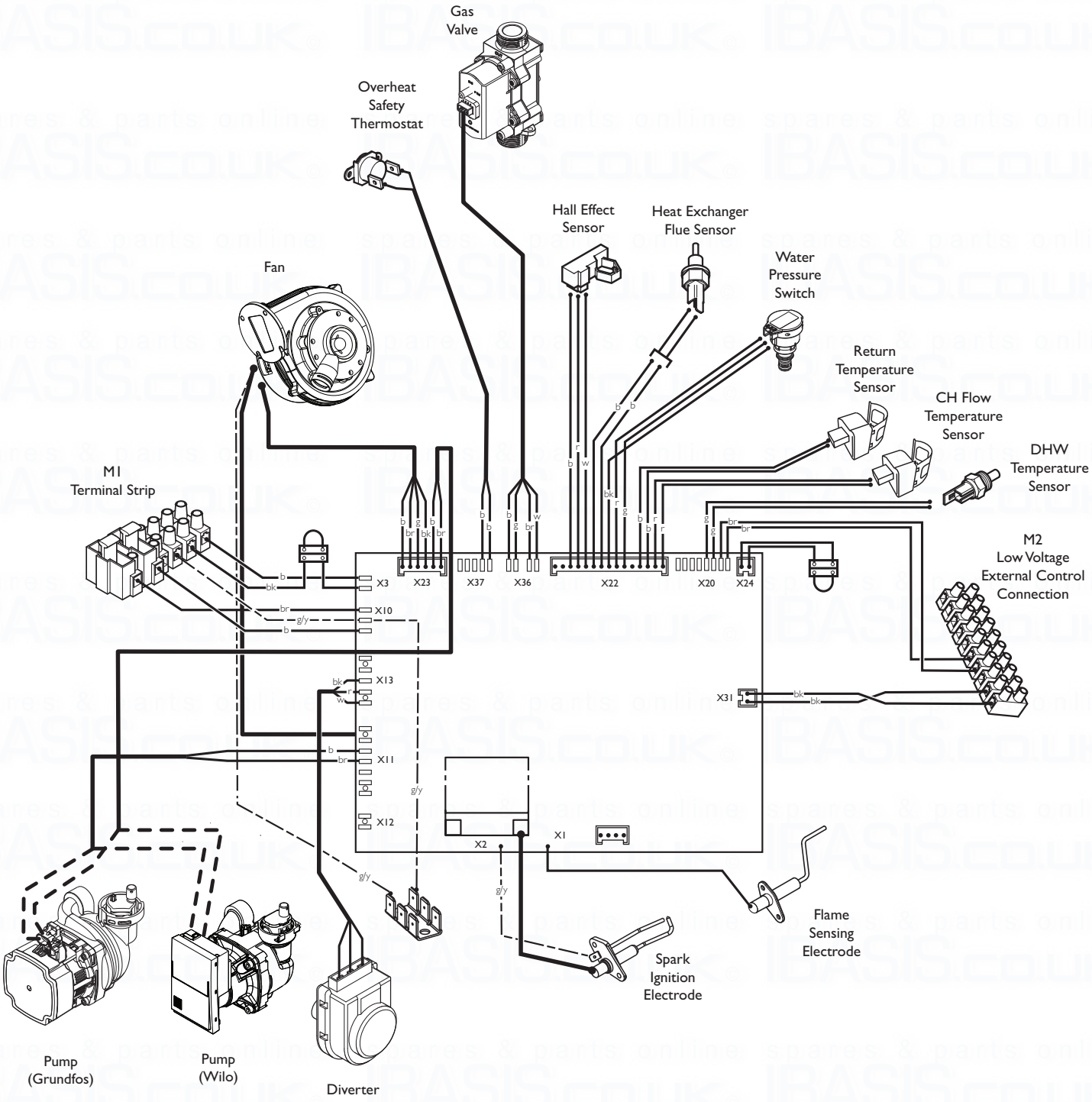

Key To Wiring Colours

b - Blue	r - Red
bk - Black	g - Green
br - Brown	g/y - Green/Yellow
w - White	y - Yellow
gr - Grey	

© Baxi Heating UK Ltd 2016

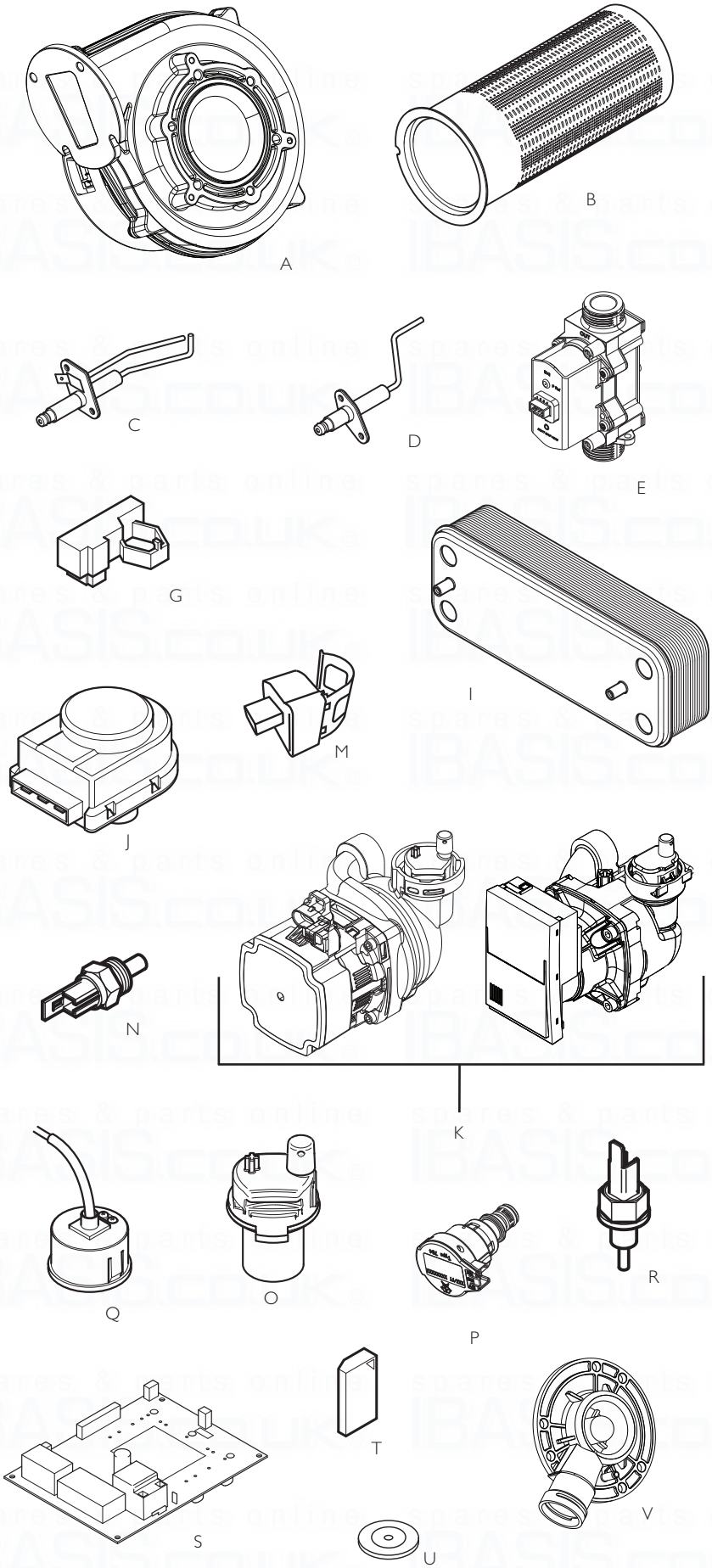

16.0 Short Parts List

Short Parts List

Key No.	Description	Manufacturers Part No.
A	Fan	720768101
B	Burner (24/28/33)	720767901
	Burner (40)	720785201
C	Spark Ignition Electrode	720767301
D	Flame Sensing Electrode	720767101
E	Gas Valve	720752301
G	Hall Effect Sensor	720788001
I	Plate Heat Exchanger (24 & 28)	720852401
	Plate Heat Exchanger (33 & 40)	720852601
J	Diverter Valve Motor	720788601
K	Pump	7654033
M	Heating Flow/Return Sensor)	720747101
N	DHW NTC Sensor	720789201
O	Pump Automatic Air Vent	720787601
P	Hydraulic Pressure Sensor	720789001
Q	Heating Pressure Gauge	720787201
R	Flue Sensor	720851401
S	PCB only (R.D.S. not inc.)	7224738
T	R.D.S. - 24	720843201
	R.D.S. - 28	720843501
	R.D.S. - 33	720843801
	R.D.S. - 40	720844101
	R.D.S. - 24 LPG	720844401
	R.D.S. - 28 LPG	720844701
	R.D.S. - 33 LPG	720845001
	R.D.S. - 40 LPG	720845301
U	Injector Washer - 24 (Ø 4.4)	720751701
	Injector Washer - 28 (Ø 4.6)	720775801
	Injector Washer - 33 (Ø 4.9)	720776001
	Injector Washer - 40 (Ø 5.8)	720786601
V	Air/Gas Venturi (24 & 28)	720768301
	Air/Gas Venturi 33	720785401
	Air/Gas Venturi 40	720785601

 © Baxi Heating UK Ltd 2016

Table Of Error Codes

E 09	Gas Valve Connection Cable
E 15	Gas Valve Fault
E 20	Central Heating NTC Fault
E 28	Flue NTC Fault
E 40	Central Heating Return NTC Fault
E 55	Calibration Required
E 109	Pre-circulation Fault
E 110	Safety Thermostat Operated
E 117	Primary System Water Pressure Too High
E 118	Primary System Water Pressure Too Low
E 125	Circulation Fault (Primary)
E 128	Flame Failure
E 130	Flue NTC Operated
E 133	Interruption Of Gas Supply or Flame Failure
E 134	Elapsed Time - Gas Valve Open Without Gas
E 135	Interruption Of Gas Supply (Internal Error)
E 154	Flow/Return Sensor Temperature Test
E 160	Fan or Fan Wiring Fault
E 270	Circulation Fault (Dry Fire)
E 321	Hot Water NTC Fault
E 384	False Flame

The i P button can be pressed so that the display shows the following information:-

1 press - '00' alternates with Sub-Code (only when fault on boiler) or '000'
2 presses - '01' alternates with CH Temperature
3 presses - '02' alternates with Outside Temperature (where Sensor fitted)
4 presses - '03' alternates with DHW Temperature
5 presses - '04' alternates with DHW Temperature
6 presses - '05' alternates with System Water Pressure
7 presses - '06' alternates with Return Temperature
8 presses - '04' alternates with Flue Temperature
9 presses - '05' alternates with Heat Exchanger Temperature

'Service Due' Message

1. After 11 months operation the 'Service Due' message will be shown on the boiler display. (If the installation has been subject to prolonged electrical isolation or power cuts this period may be longer than 11 months)

2. Once the service has been completed satisfactorily the 'Service Due' message can be reset or de-activated.

To Reset

4. Press – & + for 6 seconds. Using + scroll through until '22' is displayed. Press i P.

5. Press + to scroll to '15'. Confirm with i P then press R to return the display to normal.

To De-activate

6. Press – & + for 6 seconds. Using + scroll through until '22' is displayed. Press i P.

7. Press + until '22' is displayed again. Press i P. Using + scroll through to '50'. Press i P.

8. Press + until '25' is displayed. Confirm with i P then press R to return the display to normal.

17.0 Fault Finding

17.1 Initial Fault Finding Checks

1. Check that gas, water and electrical supplies are available at the boiler.

2. Electrical supply = 230V ~ 50 Hz.

3. The preferred minimum gas pressure is 20mb (NG) 37mb (LPG).

4. Carry out electrical system checks, i.e. Earth Continuity, Resistance to Earth, Short Circuit and Polarity with a suitable meter.

NOTE: These checks must be repeated after any servicing or fault finding.

7. Ensure all external controls are calling for heat and check all external and internal fuses. Before any servicing or replacement of parts, ensure the gas and electrical supplies are isolated.

17.2 Error Codes

1. If a fault occurs on the boiler an error code may be shown by the facia display.

2. The codes are a flashing number, either two or three digit, preceded by the symbol E :-

E followed by 20, 28, 40, 160 or 321 indicates possible faulty components.

E followed by 55 (after replacing R.D.S.) indicates calibration required (Section 14.2).

E 110 indicates overheat of the primary system water.

E 117 is displayed when the primary water pressure is greater than 2.7 bar.

E 118 is displayed when the primary water pressure is less than 0.5 bar.

E 133, 134 and 135 indicate that the gas supply has been interrupted, ignition has failed or the flame has not been detected.

E 128 is displayed if there has been a flame failure during normal operation.

E 125 is displayed in either of two situations:-
i) If between 15 and 30 seconds of the burner lighting the boiler temperature has not changed by 1°C.
ii) If within 10 minutes of the burner lighting the boiler actual temperature twice exceeds the selected temperature by 30°.
In these instances poor primary circulation is indicated.

3. By pressing the 'Reset' button for 1 to 3 seconds when E 110, 125, 133, 134, 135, 09, 15, 128 & 384 are displayed it is possible to relight the boiler.

4. If this does not have any effect, or the codes are displayed regularly further investigation is required.

© Baxi Heating UK Ltd 2016

Refer to "Illustrated Wiring Diagram" for position of terminals and components

Central Heating - Follow operational sequence

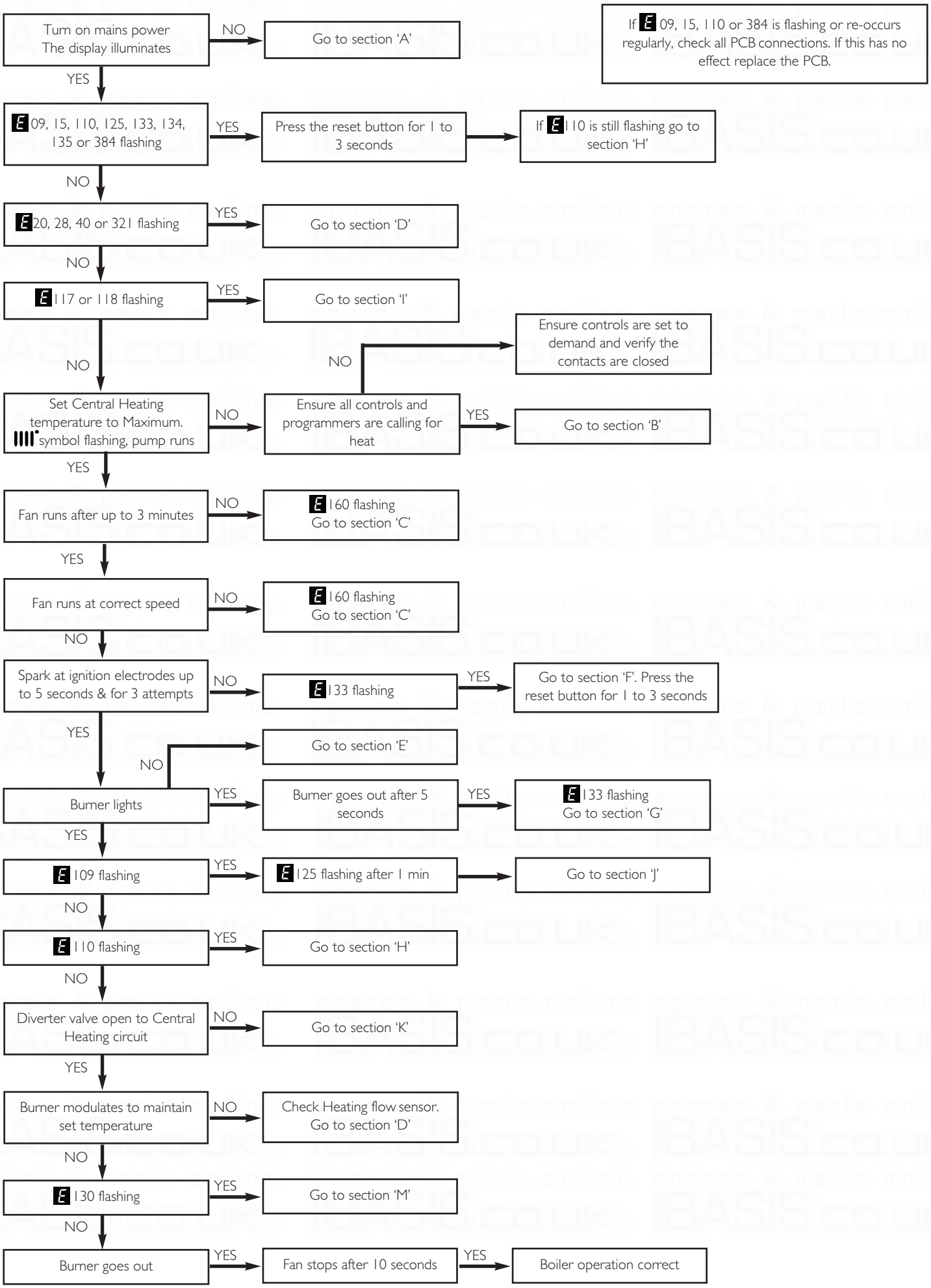

 © Baxi Heating UK Ltd 2016

Domestic Hot Water - Follow operational sequence

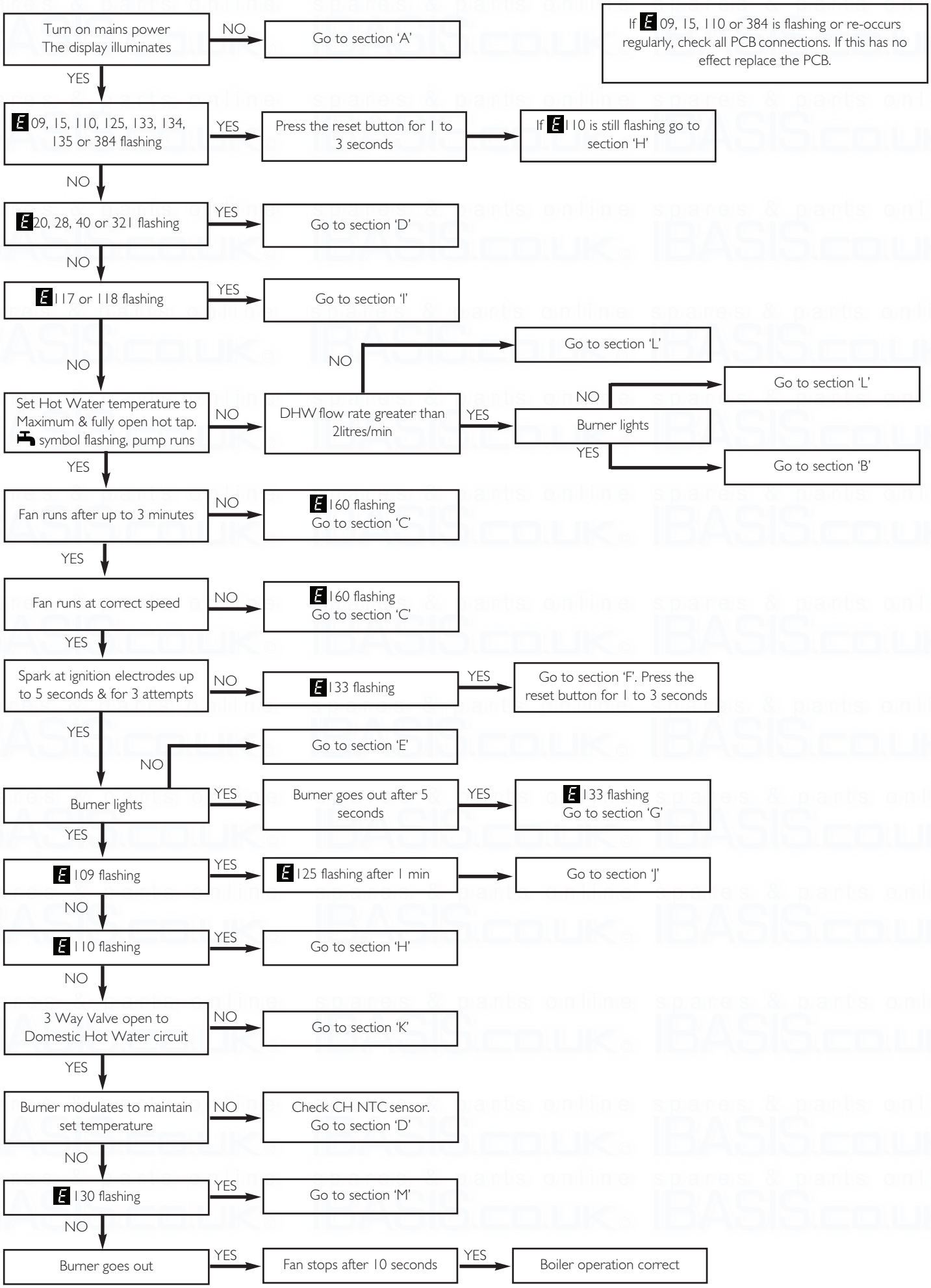

© Baxi Heating UK Ltd 2016

Fault Finding Solutions Sections

A

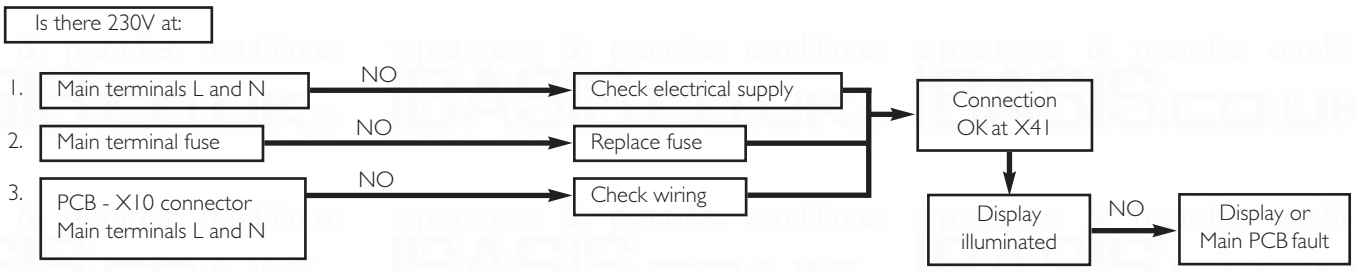

B

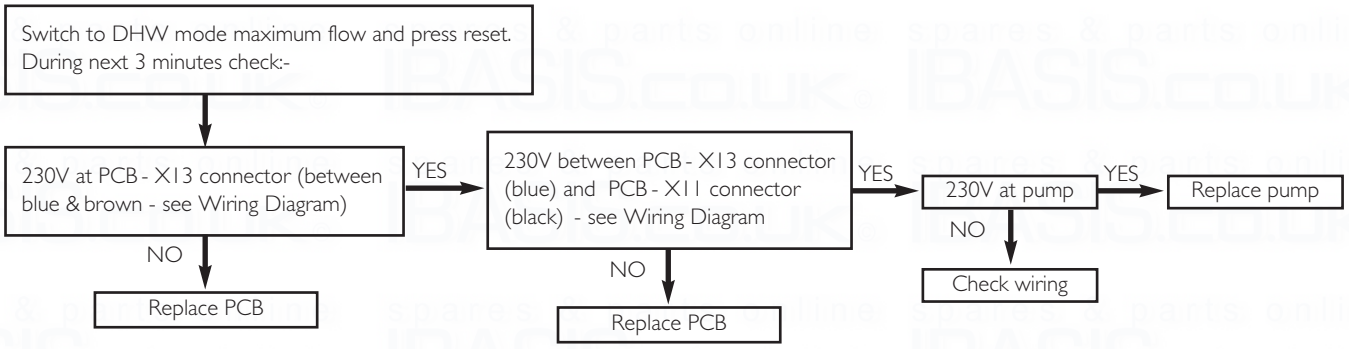

C

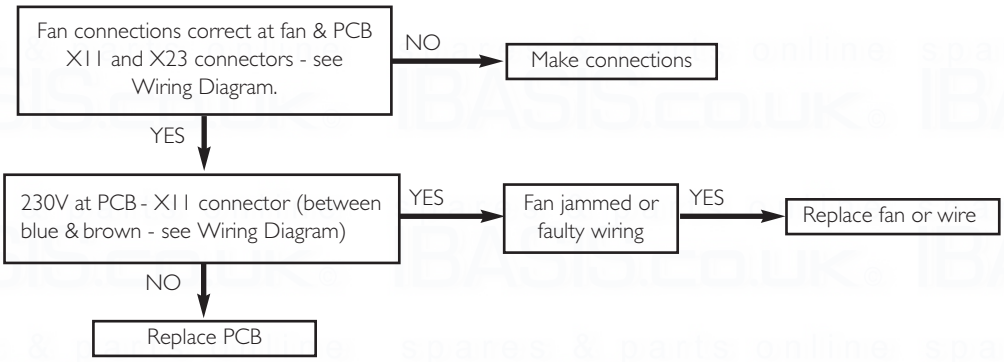

D

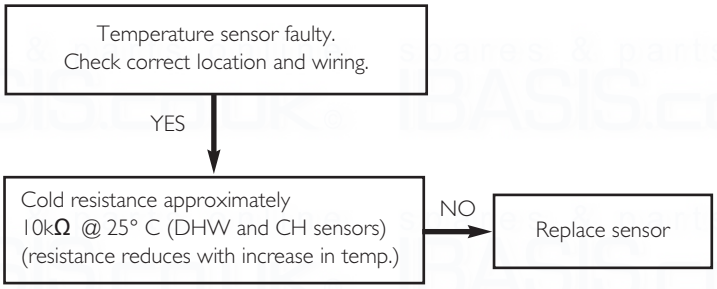

E

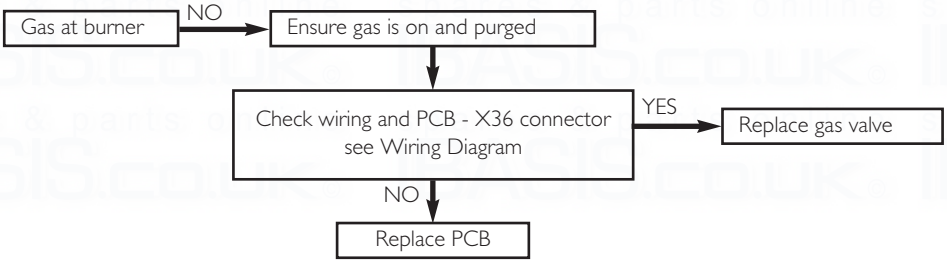

 © Baxi Heating UK Ltd 2016

F

Check and correct if necessary
1. Ignition electrode and lead
2. Electrode connection
3. Spark gap and position

YES → Check wiring - see Diagram

NO → Replace PCB

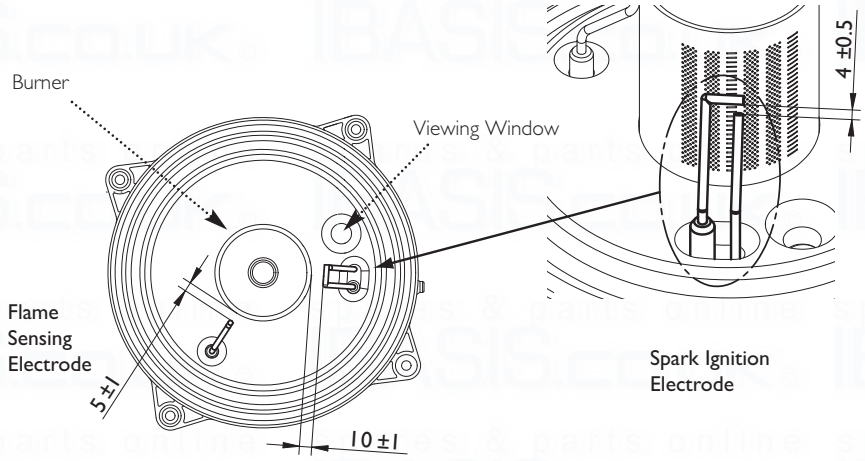

Electrode Position

G

1. Check supply pressure at the gas valve:-
Natural Gas - Minimum 17 mbar
Propane - Minimum 37 mbar

2. Check and correct if necessary
1. The set of the gas valve
(CO2 values - see instruction)
2. Flame sensing electrode and lead connections
3. Flame sensing electrode position

↓

Replace flame sensing electrode or PCB

H

Safety thermostat operated or faulty → NO → Check for and correct any system faults

NO ↓

Allow to cool. Continuity across thermostat terminals more than 1.5 ohm → YES → Replace safety thermostat

NO ↓

Check Flow & Return Sensors - see section 'D' → YES → Is E110 still flashing ?

YES ↓

Replace PCB

© Baxi Heating UK Ltd 2016

I

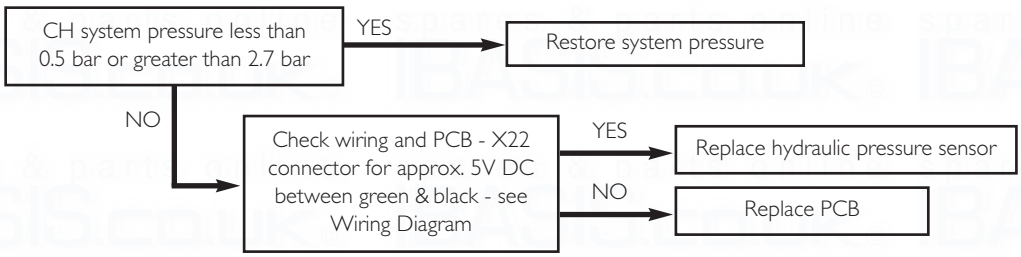

J

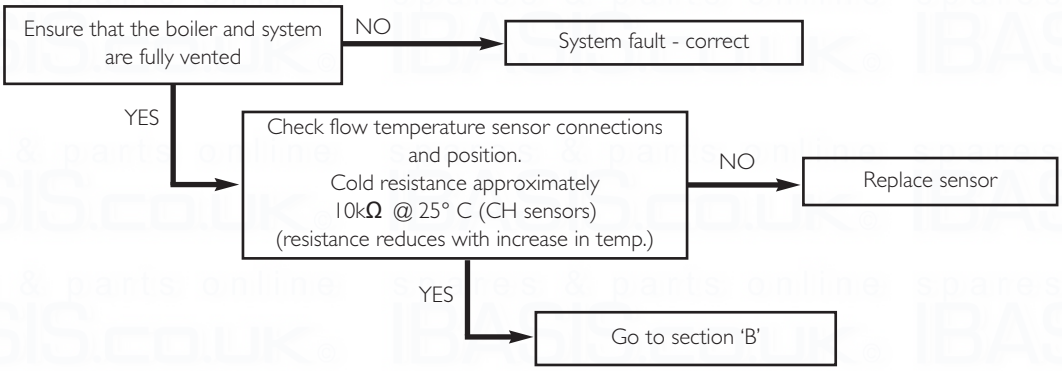

K

Is there 230V at:

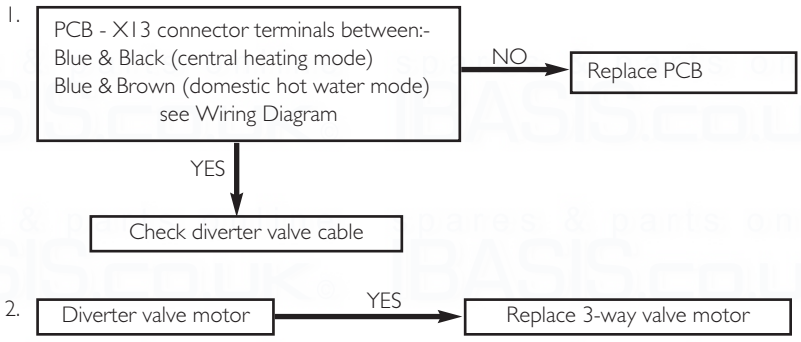

L

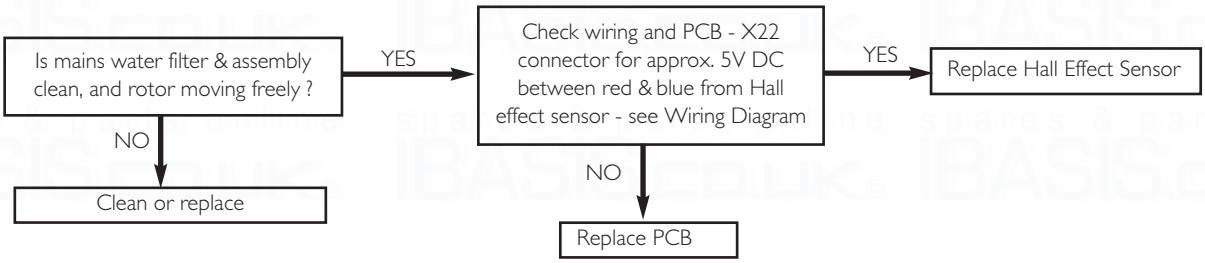

M

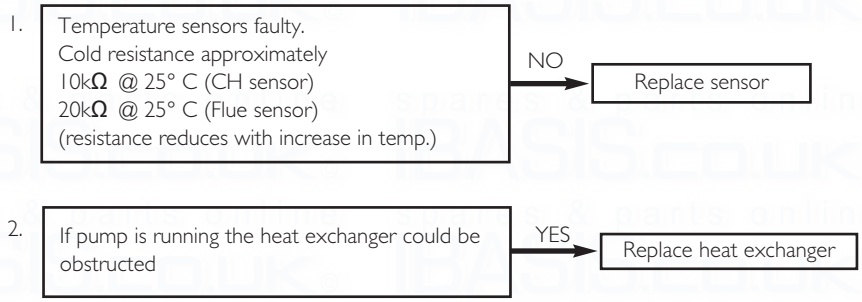

 © Baxi Heating UK Ltd 2016

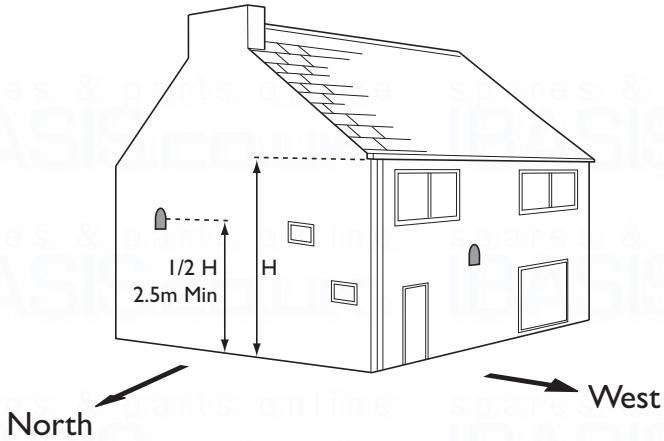

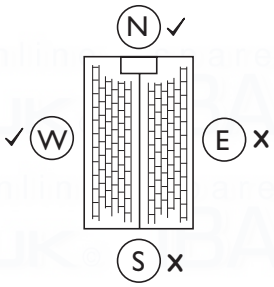

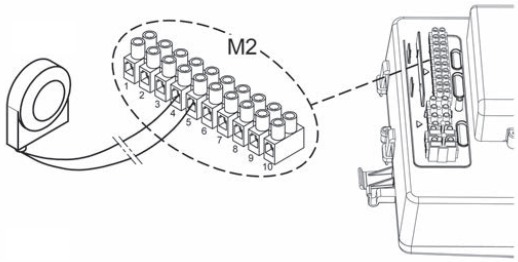

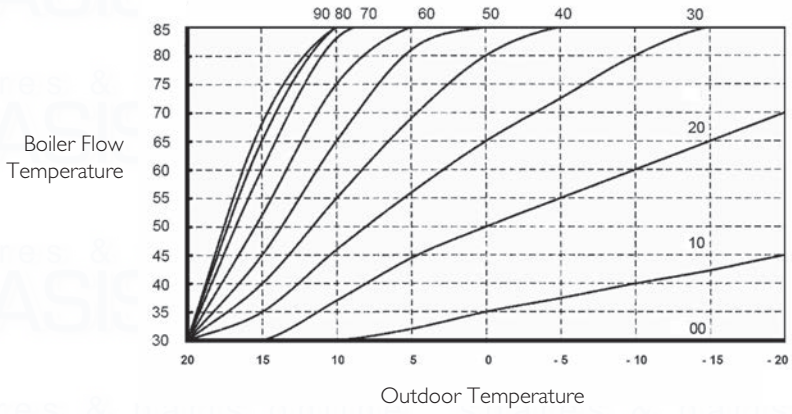

Optional Outdoor Sensor

18.1 Positioning the Optional Outdoor Sensor

1. The Sensor must be fixed to an external wall surface of the property it is serving. The wall must face a north or west.

NOTE: DO NOT position it on a south facing wall in direct sunlight !

2. The Sensor should be approximately half the height of the living space of the property, and a minimum of 2.5m above ground level.

3. It must be positioned away from any sources of heat or cooling (e.g. flue terminal) to ensure accurate operation. Siting the Sensor above doors and windows, adjacent to vents and close to eaves should be avoided.

18.2 Connecting the Optional Outdoor Sensor

1. Ensure the electrical supply to the boiler is isolated. Undo the securing screws and lift the case front panel off.

2. Disengage the securing tab and hinge the control box downwards. Undo the terminal block cover securing screw and remove the cover.

3. Remove one of the grommets, pierce the diaphragm and insert the wires from the Outdoor Sensor.

4. Leave sufficient slack in the wires to allow the Control Box to be hinged fully open. Refit the grommet.

5. Connect the wires from the Outdoor Sensor to positions 4 & 5 on M2 as shown. Refit the cover.

18.3 Setting the Sensor Curve

1. Ensure that there is power to the boiler.

2. The Central Heating temperature buttons IIII° – & IIII° + are used to select the desired curve as shown on the graph.

3. Normally the display will show the current temperature of the water in the boiler (e.g. 41°C). As the buttons are pressed the curve identification code the will be shown, from *'00'* to *'90'*.

4. To select the most appropriate curve consideration must be given to the expected outdoor temperature range. This must then be compared to a boiler flow temperature that will satisfy the needs of the user, e.g. If outdoor temperatures in the range 0°C to -5°C are anticipated and a boiler flow of no more than 60°C required, select Curve *'20'* .

5. As a further example, if Curve *'40'* is selected, at an outside temperature of 5°C the boiler flow temperature will be just below 70°C. In the event of the outside temperature falling to 0°C, the boiler flow will increase to 80°C.

6. Continue with the installation and commissioning of the boiler as described in the Installation & Servicing Instructions.

7. Explain to the user how to select a different temperature curve.

© Baxi Heating UK Ltd 2016

Optional 7 Day Wired Sensor

18.4 Connecting the Optional 7 Day Wired Sensor

NOTE: The yellow link wire between terminals 1 & 2 on terminal block M1 MUST be removed when fitting the 7 Day Wired Sensor.

1. Ensure that the power to the boiler is isolated.

2. Remove the backplate from the unit by pressing down on the rear tab and easing apart.

3. Locate the sensor and use wiring as described in the literature supplied with it.

4. Pass the wiring through the slots in the backplate and connect as shown opposite to 2 & 3 on the sensor backplate and 1 & 2 of boiler terminal M2.

5. Complete fitting as described in the sensor literature, turn the power back on and set the controls to the requirements of the user.

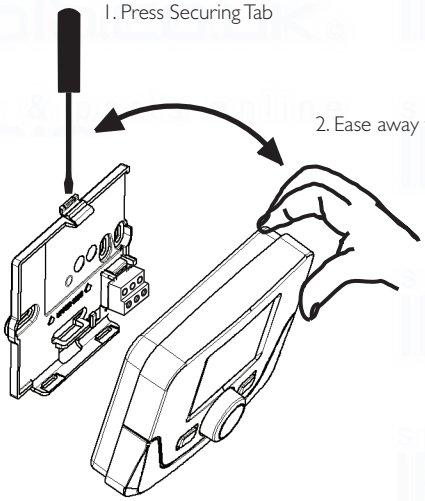

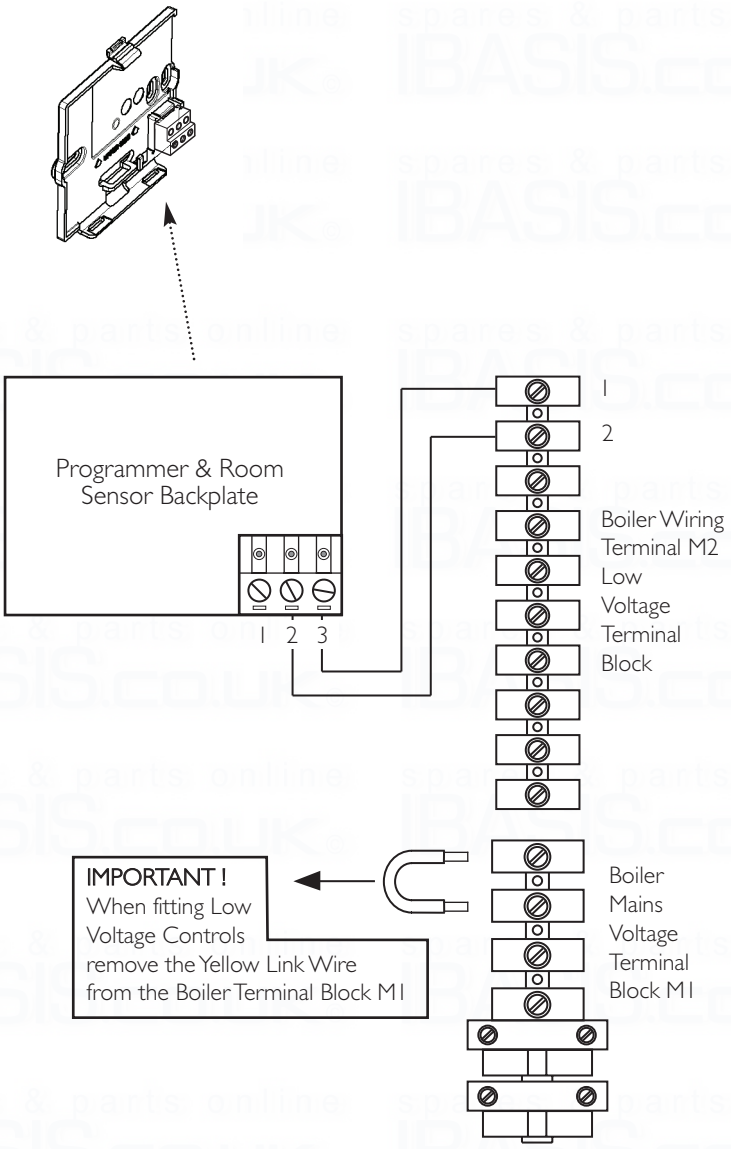

 © Baxi Heating UK Ltd 2016

Optional 7 Day Wireless Sensor & 24hr Wireless Sensor

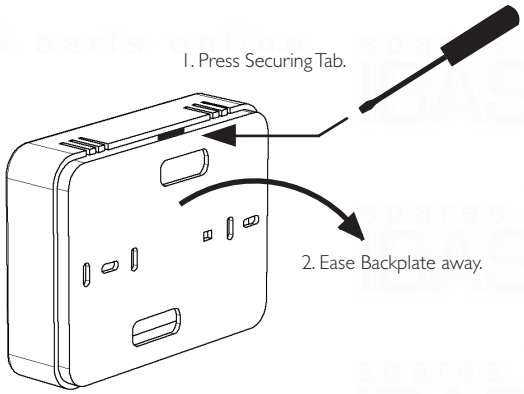

18.5 Connecting the Optional 7 Day Wireless Sensor & 24hr Wireless Sensor (kit includes a Sensor & Receiver - the Receiver is wired into the boiler).

NOTE: The yellow link wire between terminals 1 & 2 on terminal block M1 MUST be removed when fitting the 7 Day Wireless Sensor & 24hr Wireless Sensor.

1. Ensure that the power to the boiler is isolated.

2. Remove the backplate from the receiver unit by pressing down on the rear tab and easing apart.

3. Locate the receiver and use wiring as described in the literature supplied with it.

4. Pass the wiring through the slots in the backplate and connect as shown opposite to the OT connection on the receiver backplate and 1 & 2 of boiler terminal M2.

5. Complete fitting as described in the sensor/receiver literature, turn the power back on and set the controls to the requirements of the user.

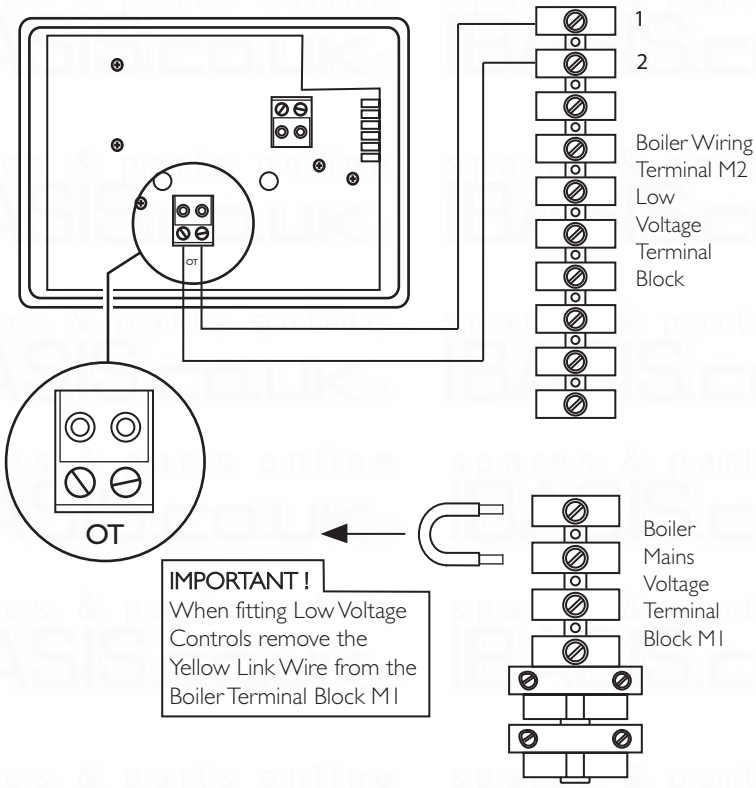

© Baxi Heating UK Ltd 2016

spares & parts online IBASIS.co.uk

 © Baxi Heating UK Ltd 2016

© Baxi Heating UK Ltd 2016

GAS BOILER SYSTEM COMMISSIONING CHECKLIST

This Commissioning Checklist is to be completed in full by the competent person who commissioned the boiler as a means of demonstrating compliance with the appropriate Building Regulations and then handed to the customer to keep for future reference.

Failure to install and commission according to the manufacturer's instructions and complete this Benchmark Commissioning Checklist will invalidate the warranty. This does not affect the customer's statutory rights.

Customer name:	Telephone number:
Address:	
Boiler make and model:	
Boiler serial number:	
Commissioned by (PRINT NAME):	Gas Safe register number:
Company name:	Telephone number:
Company address:	
	Commissioning date:
To be completed by the customer on receipt of a Building Regulations Compliance Certificate*	
Building Regulations Notification Number (if applicable):	

CONTROLS (tick the appropriate boxes)				
Time and temperature control to heating	Room thermostat and programmer/timer		Programmable room thermostat	
	Load/weather compensation		Optimum start control	
Time and temperature control to hot water	Cylinder thermostat and programmer/timer		Combination Boiler	
Heating zone valves	Fitted		Not required	
Hot water zone valves	Fitted		Not required	
Thermostatic radiator valves	Fitted		Not required	
Automatic bypass to system	Fitted		Not required	
Boiler interlock			Provided	

ALL SYSTEMS				
The system has been flushed and cleaned in accordance with BS7593 and boiler manufacturer's instructions			Yes	
What system cleaner was used?				
What inhibitor was used?		Quantity		litres
Has a primary water system filter been installed?	Yes		No	

CENTRAL HEATING MODE measure and record:			
Gas rate	m³/hr	**OR**	ft³/hr
Burner operating pressure (if applicable)	mbar	**OR** Gas inlet pressure	mbar
Central heating flow temperature			°C
Central heating return temperature			°C

COMBINATION BOILERS ONLY				
Is the installation in a hard water area (above 200ppm)?	Yes		No	
If yes, and if required by the manufacturer, has a water scale reducer been fitted?	Yes		No	
What type of scale reducer has been fitted?				
DOMESTIC HOT WATER MODE Measure and Record:				
Gas rate	m³/hr	**OR**	ft³/hr	
Burner operating pressure (at maximum rate)	mbar	**OR** Gas inlet pressure at maximum rate	mbar	
Cold water inlet temperature			°C	
Hot water has been checked at all outlets	Yes		Temperature	°C
Water flow rate			l/min	

CONDENSING BOILERS ONLY		
The condensate drain has been installed in accordance with the manufacturer's instructions and/or BS5546/BS6798	Yes	

ALL INSTALLATIONS						
Record the following:	At max. rate:	CO	ppm	**AND**	CO/CO_2	Ratio
	At min. rate: (where possible)	CO	ppm	**AND**	CO/CO_2	Ratio
The heating and hot water system complies with the appropriate Building Regulations					Yes	
The boiler and associated products have been installed and commissioned in accordance with the manufacturer's instructions					Yes	
The operation of the boiler and system controls have been demonstrated to and understood by the customer					Yes	
The manufacturer's literature, including Benchmark Checklist and Service Record, has been explained and left with the customer					Yes	

Commissioning Engineer's Signature
Customer's Signature
(To confirm satisfactory demonstration and receipt of manufacturer's literature)

*All installations in England and Wales must be notified to Local Authority Building Control (LABC) either directly or through a Competent Persons Scheme. A Building Regulations Compliance Certificate will then be issued to the customer.

benchmark COLLECTIVE MARK
THE MARK OF QUALITY FOR THE INSTALLATION, COMMISSIONING AND SERVICING OF DOMESTIC HEATING AND HOT WATER SYSTEMS

© Heating and Hotwater Industry Council (HHIC)

SERVICE RECORD

It is recommended that your heating system is serviced regularly and that the appropriate Service Interval Record is completed.

Service Provider

Before completing the appropriate Service Record below, please ensure you have carried out the service as described in the manufacturer's instructions. Always use the manufacturer's specified spare part when replacing controls.

SERVICE 01					Date:
Engineer name:					
Company name:					
Telephone No:					
Gas safe register No:					
Record:	At max. rate:	CO	ppm	**AND**	CO_2 %
	At min. rate: (Where Possible)	CO	ppm	**AND**	CO_2 %
Comments:					
Signature					

SERVICE 02					Date:
Engineer name:					
Company name:					
Telephone No:					
Gas safe register No:					
Record:	At max. rate:	CO	ppm	**AND**	CO_2 %
	At min. rate: (Where Possible)	CO	ppm	**AND**	CO_2 %
Comments:					
Signature					

SERVICE 03					Date:
Engineer name:					
Company name:					
Telephone No:					
Gas safe register No:					
Record:	At max. rate:	CO	ppm	**AND**	CO_2 %
	At min. rate: (Where Possible)	CO	ppm	**AND**	CO_2 %
Comments:					
Signature					

SERVICE 04					Date:
Engineer name:					
Company name:					
Telephone No:					
Gas safe register No:					
Record:	At max. rate:	CO	ppm	**AND**	CO_2 %
	At min. rate: (Where Possible)	CO	ppm	**AND**	CO_2 %
Comments:					
Signature					

SERVICE 05					Date:
Engineer name:					
Company name:					
Telephone No:					
Gas safe register No:					
Record:	At max. rate:	CO	ppm	**AND**	CO_2 %
	At min. rate: (Where Possible)	CO	ppm	**AND**	CO_2 %
Comments:					
Signature					

SERVICE 06					Date:
Engineer name:					
Company name:					
Telephone No:					
Gas safe register No:					
Record:	At max. rate:	CO	ppm	**AND**	CO_2 %
	At min. rate: (Where Possible)	CO	ppm	**AND**	CO_2 %
Comments:					
Signature					

SERVICE 07					Date:
Engineer name:					
Company name:					
Telephone No:					
Gas safe register No:					
Record:	At max. rate:	CO	ppm	**AND**	CO_2 %
	At min. rate: (Where Possible)	CO	ppm	**AND**	CO_2 %
Comments:					
Signature					

SERVICE 08					Date:
Engineer name:					
Company name:					
Telephone No:					
Gas safe register No:					
Record:	At max. rate:	CO	ppm	**AND**	CO_2 %
	At min. rate: (Where Possible)	CO	ppm	**AND**	CO_2 %
Comments:					
Signature					

SERVICE 09					Date:
Engineer name:					
Company name:					
Telephone No:					
Gas safe register No:					
Record:	At max. rate:	CO	ppm	**AND**	CO_2 %
	At min. rate: (Where Possible)	CO	ppm	**AND**	CO_2 %
Comments:					
Signature					

SERVICE 10					Date:
Engineer name:					
Company name:					
Telephone No:					
Gas safe register No:					
Record:	At max. rate:	CO	ppm	**AND**	CO_2 %
	At min. rate: (Where Possible)	CO	ppm	**AND**	CO_2 %
Comments:					
Signature					

*All installations in England and Wales must be notified to Local Authority Building Control (LABC) either directly or through a Competent Persons Scheme. A Building Regulations Compliance Certificate will then be issued to the customer.

benchmark COLLECTIVE MARK
THE MARK OF QUALITY FOR THE INSTALLATION, COMMISSIONING AND SERVICING OF DOMESTIC HEATING AND HOT WATER SYSTEMS

© Heating and Hotwater Industry Council (HHIC)

Baxi Customer Support

0344 871 1545

Opening hours

Monday - Friday, 8.00am-6.00pm

Weekends and Bank Holidays, 8.30am-2.00pm

Please note calls may be recorded for training and monitoring purposes

baxi.co.uk

Register now to activate your warranty:

www.baxi.co.uk/registration

For the warranty to be maintained, please make sure...

1. Benchmark checklist is completed
2. Warranty is registered within 30 days
3. The boiler has an annual service

For full terms and conditions, visit www.baxi.co.uk/terms. Failure to adhere to terms and conditions will void your manufacturer's warranty.

Baxi
Brooks House,
Coventry Road,
Warwick, CV34 4LL

0086

benchmark COLLECTIVE MARK
THE MARK OF QUALITY FOR THE INSTALLATION, COMMISSIONING AND SERVICING OF DOMESTIC HEATING AND HOT WATER SYSTEMS

Please ensure the boiler is installed in accordance with these installation instructions and that you adhere to the Building Regulations.

e&oe
All descriptions and illustrations provided in this document have been carefully prepared but we reserve the right to make changes and improvements in our products which may affect the accuracy of the information contained in this leaflet. All goods are sold subject to our standard Conditions of Sale which are available on request.

part of BAXI

7654258 - 02 (03/16)