POTTERTON

Osprey 2 CFL
125 - 150 - 180 - 220

Gas Fired Floor Standing Boiler

Installation and Servicing Instructions

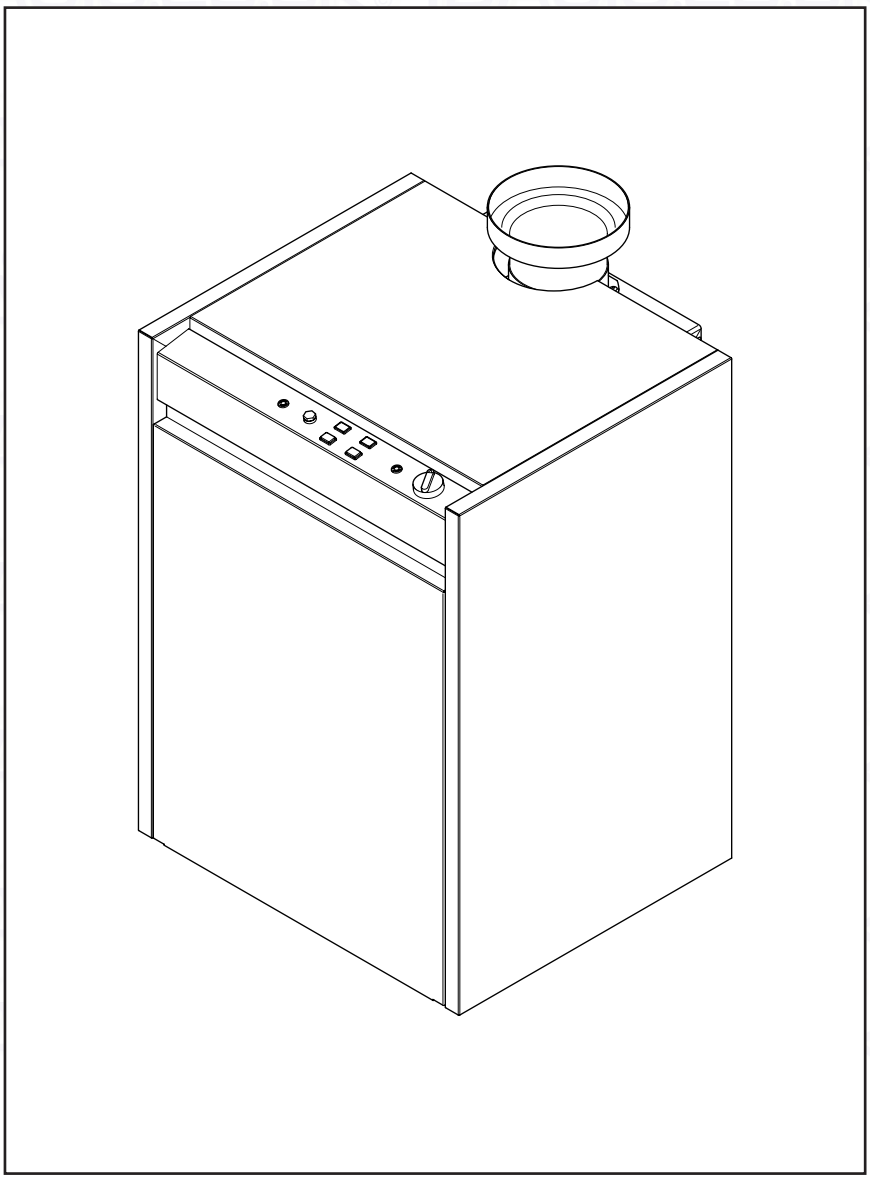

Please leave these instructions with the user

spares & parts online IBASIS.CO.UK

Natural Gas

Potterton Osprey 2 CFL 125
G.C.N° 41 590 54

Potterton Osprey 2 CFL 150
G.C.N° 41 590 55

Potterton Osprey 2 CFL 180
G.C.N° 41 590 56

Potterton Osprey 2 CFL 220
G.C.N° 41 590 57

CE

The boiler meets the requirements of Statutory Instrument " The Boiler (Efficiency) Regulations 1993 N° 3083" and is deemed to meet the requirements of Directive 92/42/EEC on the energy efficiency requirements for new hot water boilers fired with liquid or gaseous fuels:-

Type test for purpose of Regulation 5 certified by:
Notified Body 0049.

Product/Production certified by:
Notified Body 0049.

For GB/IE only.

spares & parts online IBASIS.CO.UK

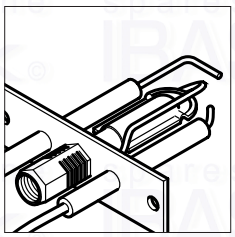

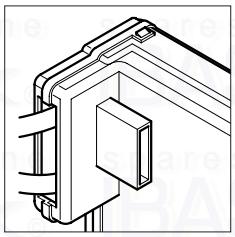

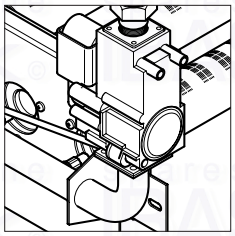

Contents

Section		Page
1.0	Introduction	4
2.0	General Layout	5
3.0	Technical Data	6
4.0	Dimensions	7
5.0	System Details	8
6.0	Site Requirements	10
7.0	Installation	13
8.0	Commissioning the Boiler	15
9.0	Servicing the Boiler	17
10.0	Changing Components	19
11.0	Illustrated Wiring Diagram	23
12.0	Fault Finding	24
13.0	Short Parts List	28

spares & parts online IBASIS.CO.UK

NOTE: This appliance must be installed in accordance with the manufacturer's instructions and the regulations in force. Read the instructions fully before installing or using the appliance.

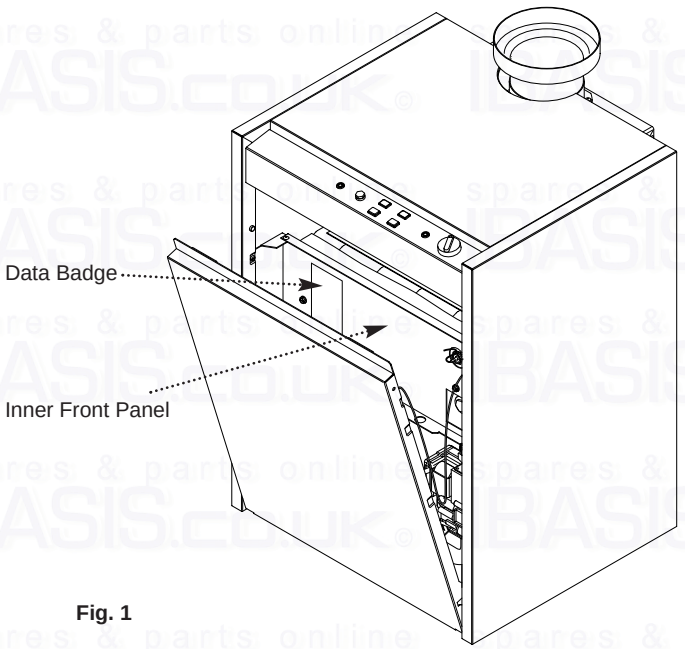

Fig. 1

"Benchmark" Log Book

As part of the industry-wide "Benchmark" initiative all Baxi boilers now include an Installation, Commissioning and Service Record Log Book. Please read the Log Book carefully and complete all sections relevant to the appliance and installation. These include sections on the type of controls employed, flushing the system, burner operating pressure etc. The details of the Log Book will be required in the event of any warranty work. Also, there is a section to be completed at each subsequent regular service visit. The Log Book must be left with the user.

1.0 Introduction

Potterton declare that no substances harmful to health are contained in the appliance or used during appliance manufacture.

1.1 Description

1. The Potterton Osprey 2 CFL is a fully automatic gas fired floor standing conventionally flued boiler with a cast iron heat exchanger.

2. The boiler is designed for use with fully pumped open vented or sealed water systems with an indirect hot water cylinder.

3. The boiler is available in outputs of 35.0, 43.0, 52.8 and 64.5kW

4. It is designed for use on Natural Gas (G20).

5. The boiler data badge is positioned on the boiler inner front panel.

6. The boiler is intended to be installed in residential / commercial / light industrial E.M.C. environments on a governed meter supply only.

7. **All systems must be thoroughly flushed and treated with inhibitor (see section 6.2).**

1.2 Installation

1. The appliance is suitable for installation only in G.B. and I.E. and should be installed in accordance with the rules in force. For Ireland install in accordance with I.S.813 "Installation of Gas Appliances". The installation must be carried out by a CORGI Registered Installer or other competent person and be in accordance with the relevant requirements of current Gas Safety (Installation and Use) Regulations, the Building Regulations (Scotland) (Consolidation), the Local Building Regulations, the Current I.E.E. Wiring Regulations and the bye laws of the Local Water Undertaking. Where no specific instructions are given, reference should be made to the relevant BRITISH STANDARD CODES OF PRACTICE.

2.0 General Layout

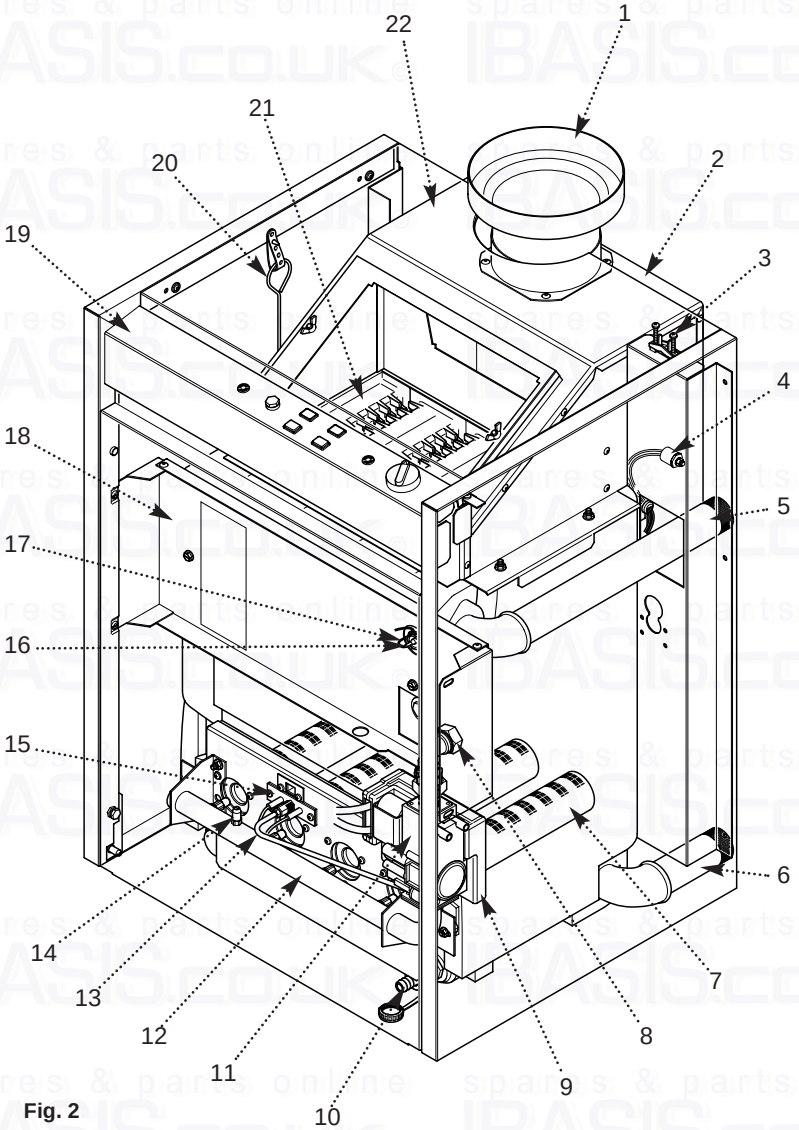

Fig. 2

2.1 Layout

1. Flue Spigot
2. Draught Diverter
3. Cable Clamp
4. Flue Safety Thermostat
5. Flow Connection
6. Return Connection
7. Burner
8. Gas Inlet Connection
9. Burner Ignition Control
10. Boiler Drain and Cap
11. Gas Valve
12. Burner Manifold
13. Pilot Feed Pipe
14. Pressure Test Point
15. Pilot
16. Overheat Thermostat
17. Boiler Thermostat
18. Inner Front Panel
19. Control Panel
20. Cleaning Brush
21. Heat Exchanger
22. Flue Hood
23. Boiler Safety Overheat Neon
24. Flame Failure Neon
25. Burner On Neon
26. Power On Neon
27. Boiler Safety Overheat Reset
28. Flame Failure Reset
29. On/Off Button
30. Temperature Control

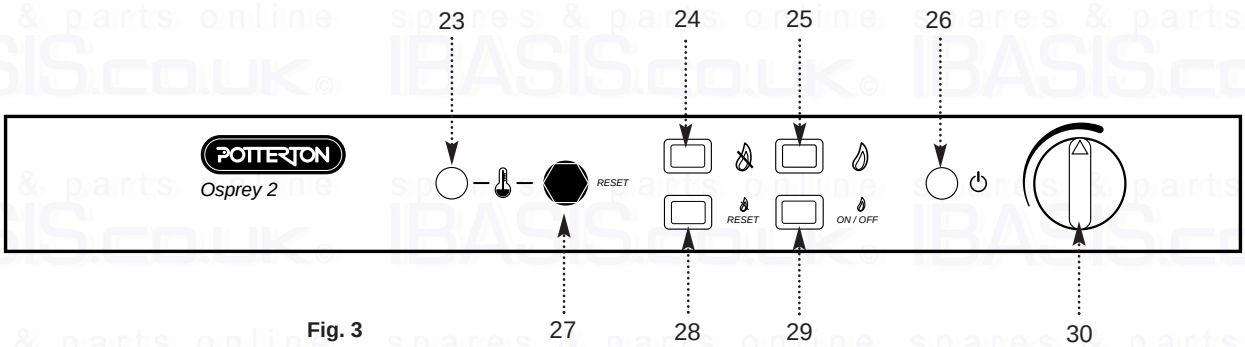

Fig. 3

Appliance Type	B_{11BS}
Appliance Category	CAT I_{2H}

Heat Input (gross)		**125**	**150**
	kW	43.07	53.28
	Btu/h	146,983	181,827
		180	**220**
	kW	64.82	79.69
	Btu/h	221,209	271,956

Heat Output		**125**	**150**
	kW	35.0	43.0
	Btu/h	119,443	146,745
		180	**220**
	kW	52.8	64.5
	Btu/h	180,189	220,117

Gas Rate		**125**	**150**
	m^3/h	4.0	5.06
	ft^3/h	142	179
		180	**220**
	m^3/h	6.0	7.3
	ft^3/h	212	258

Burner Pressure	**125**	**150**
mbar	11.2 ± 0.4	11.4 ± 0.4
	180	**220**
mbar	11.0 ± 0.4	11.8 ± 0.4

Inlet Pressure (Natural Gas Only)

mbar	20
in wg	8

Burner Injector
2.6mm Diameter

Pilot Injector
0.45mm Diameter

NO_X Class	
150 & 180	3
125 & 220	2

Electrical Supply	230V~ $50H_Z$
Power Consumption (excluding pump)	25W
External Fuse Rating	3A
External Controls	230V switching
Electrical Protection	IP20

(Appliance must be connected to an earthed supply)

SEDBUK Declaration For Potterton Osprey 2 CFL

The seasonal efficiency (SEDBUK)

125: 78.6 %
150: 78.0 %
180: 78.3 %
220: 78.0 %

This value is used in the UK Government's Standard Assessment Procedure (SAP) for energy rating of dwellings. The test data from which it has been calculated have been certified by 0049.

Connections

Gas Supply	-	22mm compression
Flow	-	1¼" steel pipe, taper thread
Return	-	1¼" steel pipe, taper thread

Clearances

LH Side	150mm Min
RH Side	150mm Min
Top	700mm Min
Front	700mm Min
Rear	200mm Min

Weights	kg
125	140
150	170
180	200
220	230

Recommended System Temperature Drop	11°C	20°F

Maximum Flow Temperature
85°C

Outercase Dimensions

Casing Height	-	850mm
Casing Width (125)	-	600mm
Casing Width (150)	-	695mm
Casing Width (180)	-	790mm
Casing Width (220)	-	885mm
Casing Depth (125/150)	-	600mm
Casing Depth (180/220)	-	650mm

Water Content	litres
125	24
150	29
180	33
220	38

Working Head	
Minimum	0.5m
Maximum	30m (3 bar)

Flue Spigot Diameter	
125/150	184mm
180/220	241mm

Hydraulic Resistance Charts

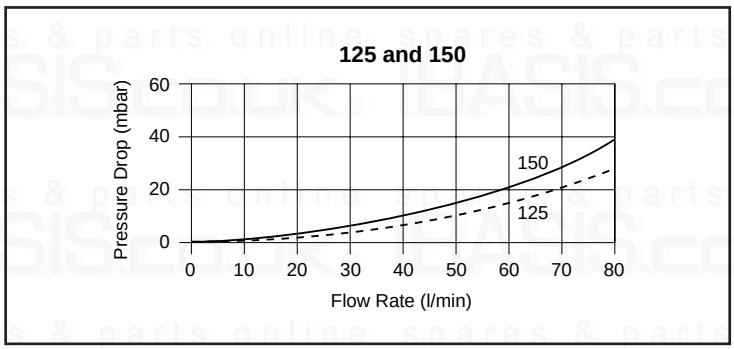

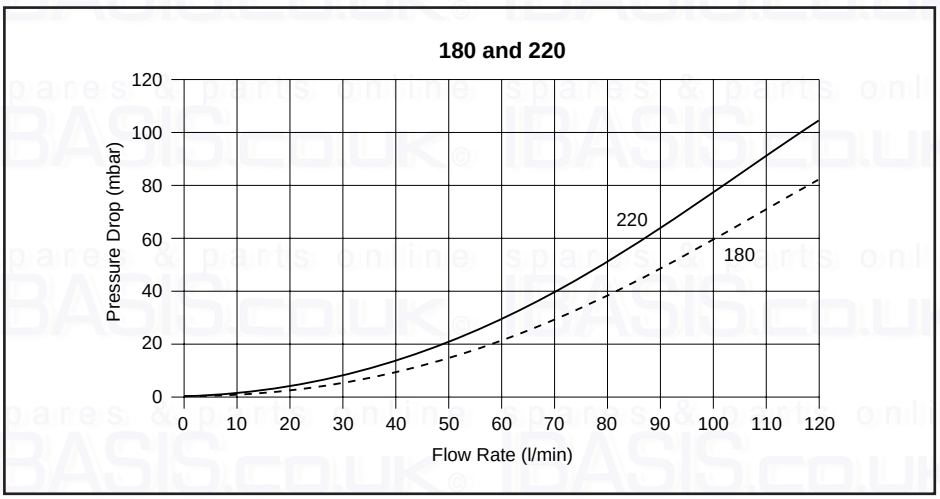

4.0 Dimensions

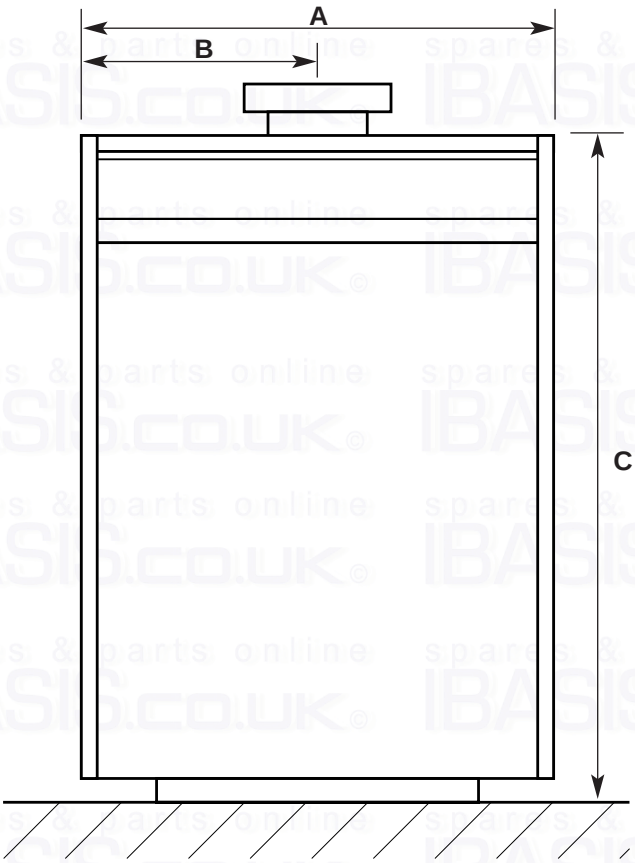

Fig. 4 Front

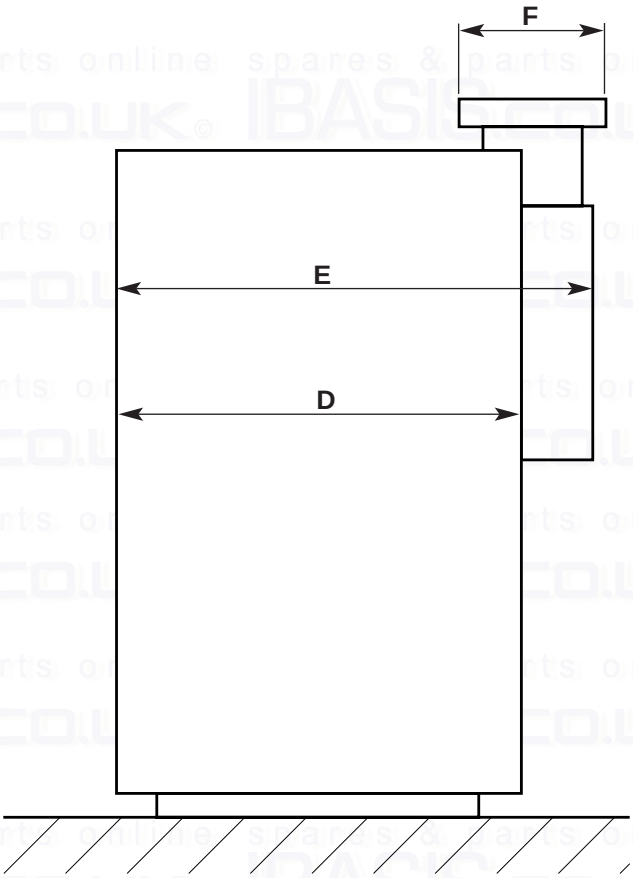

Fig. 5 Side

	Dimensions (mm)					
Model	**A**	**B**	**C**	**D**	**E**	**F**
125	600	332.5	850	511	600	184
150	695	380	850	511	600	184
180	790	427.5	850	511	650	241
220	885	475	850	511	650	241

spares & parts online IBASIS.CO.UK

5.0 System Details

5.1 Primary Circuit

1. The appliance is suitable for fully pumped systems only. The system can be open vented or sealed.

2. A sealed system must incorporate the following:-
- Safety Valve
- Pressure Gauge
- Expansion Vessel
- Filling Point

Reference must be made to the specific sections of BS5449 relating to sealed systems.

Treatment of Water Circulating Systems

- All recirculatory water systems will be subject to corrosion unless an appropriate water treatment is applied. This means that the efficiency of the system will deteriorate as corrosion sludge accumulates within the system, risking damage to pump and valves, boiler noise and circulation problems.

- For optimum performance after installation this boiler and its associated central heating system must be flushed in accordance with the guidelines given in BS 7593 “Treatment of water in domestic hot water central heating systems”.

- This must involve the use of a proprietary cleanser, such as BetzDearborn Sentinel X300 or X400, or Fernox Superfloc. Full instructions are supplied with the products, but for immediate information please contact BetzDearborn (0151 420 9563) or Fernox (01799 550 811) directly.

- For long term protection against corrosion and scale, after flushing it is recommended that an inhibitor such as BetzDearborn Sentinel X100, or Fernox MB-1 or Copal is dosed in accordance with the guidelines given in BS 7593.

Failure to flush and add inhibitor to the system may invalidate the appliance warranty.

- It is important to check the inhibitor concentration after installation, system modification and at every service in accordance with the manufacturer’s instructions. (Test kits are available from inhibitor stockists.)

- For information or advice regarding any of the above contact the Potterton Helpline.

spares & parts online IBASIS.CO.UK

5.0 System Details

5.2 Bypass

1. The boiler is fitted with a pump overrun device which allows the removal of residual heat from the boiler. The system design must therefore always provide an open circuit to allow water circulation between the boiler flow and return.

2. Any bypass must be capable of allowing a minimum flow rate of 8l/min and be able to dissipate at least 2kW.

5.3 System Control

1. The boiler is intended for use in a heating system that incorporates external controls, i.e. a minimum of a timer device.

2. For optimum operating conditions and maximum economy the fitting of room and cylinder thermostats is recommended.

3. The boiler should be controlled so that it operates on demand only.

spares & parts online IBASIS.CO.UK

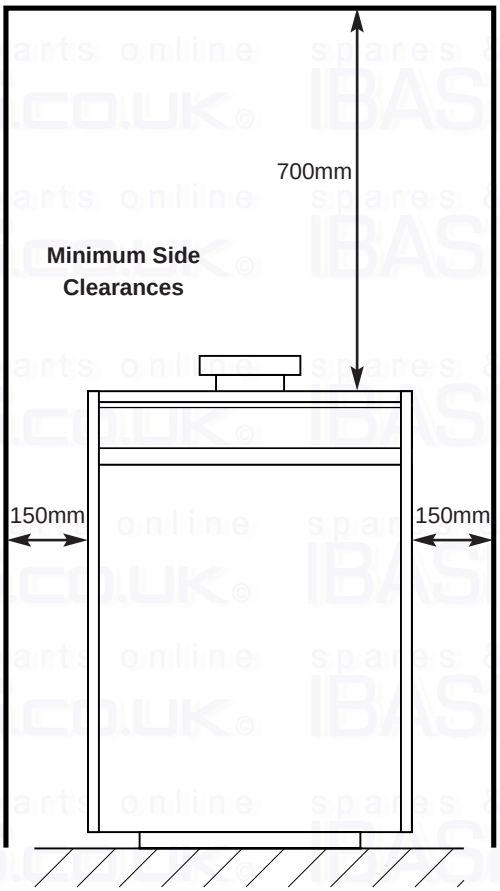

Fig. 6

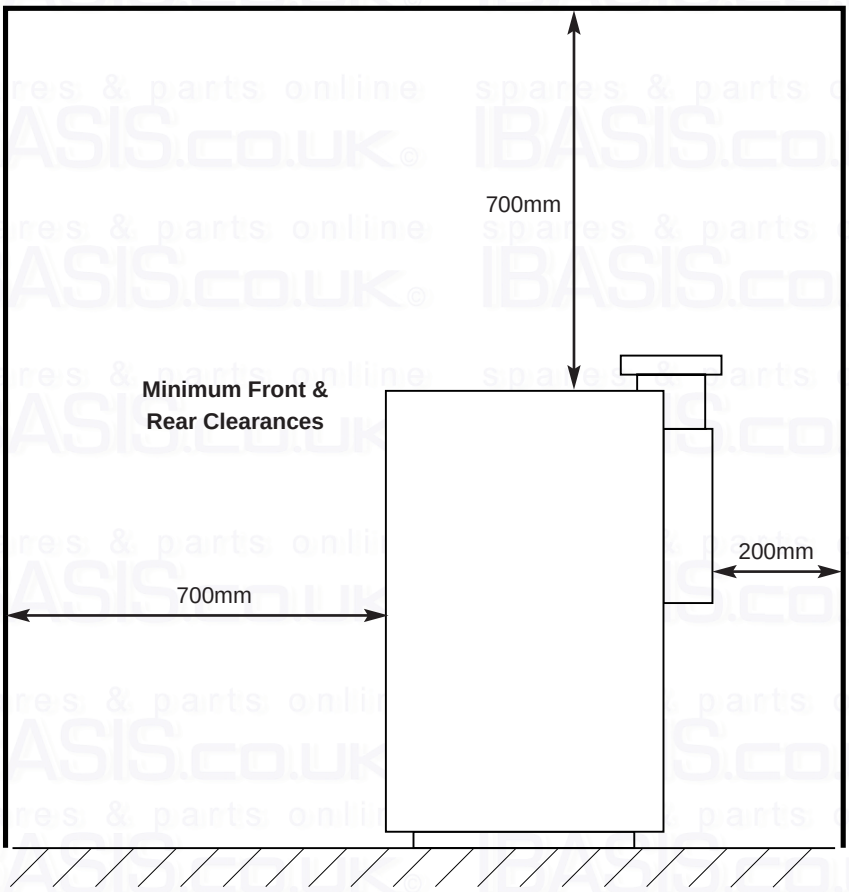

Fig. 7

6.0 Site Requirements

6.1 Information

1. The installation must be carried out by a CORGI Registered Installer or other registered competent person and be in accordance with the relevant requirements of the current Gas Safety (Installation and Use) Regulations, the Building Regulations (Scotland)(Consolidation), the Local Building Regulations, the current I.E.E. Wiring Regulations and the bye laws of the Local Water Undertaking. Where no specific instruction is given reference should be made to the relevant British Standard Codes of Practice. For Ireland install in accordance with IS 813 “Installation of Gas Appliances”.

6.2 B.S. Codes of Practice

STANDARD	SCOPE
B.S. 6891	Gas Installation.
B.S. 5440: Pt 1	Flues.
B.S. 5440: Pt 2	Ventilation
B.S. 5546	Installation of hot water supplies for domestic purposes.
B.S. 7074	Expansion vessels and ancillary equipment for sealed water systems.
B.S. 5449	Forced circulation hot water systems.
B.S. 6798	Installation of gas fired boilers.

WARNING - The addition of anything that may interfere with the normal operation of the appliance without the express written permission of Potterton could invalidate the appliance warranty and infringe the Gas Safety (Installation and Use) Regulations.

6.3 Clearances (Fig. 6 & 7)

1. Minimum clearances must be provided around the boiler as follows:-

Each Side	-	150mm
Top	-	700mm
Front	-	700mm
Rear	-	200mm

spares & parts online IBASIS.CO.UK

6.4 Location

1. The boiler must be positioned on a flat and level floor or base which must be capable of supporting the full operational weight of the boiler. The flue must pass through an outside roof or wall and discharge to atmosphere in a position permitting satisfactory removal of combustion products.

2. The boiler should be fitted within the building unless otherwise protected by a suitable enclosure i.e. garage or outhouse. (The 120 and 150 boilers may be fitted inside a cupboard - see Section 6.7).

3. If the boiler or any part of the system is located in an area that may be subjected to low ambient temperatures, it is recommended that a suitable frost protection device is incorporated into the control system.

4. If the boiler is fitted in a room containing a bath or shower reference must be made to the current I.E.E. Wiring Regulations and Building Regulations. If the boiler is to be fitted into a building of timber frame construction then reference must be made to the current edition of Institute of Gas Engineers Publication IGE/UP/7 (Gas Installations in Timber Framed Housing).

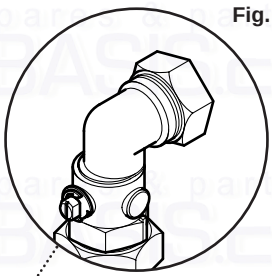

Fig. 9

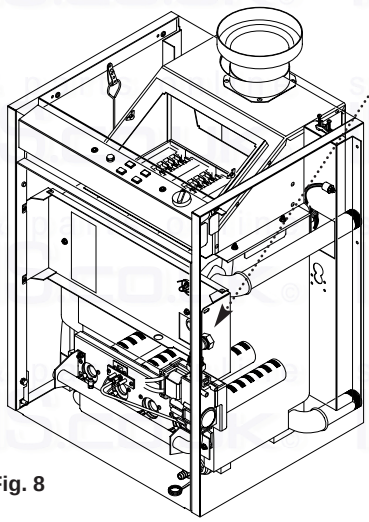

Fig. 8

6.5 Gas Supply

1. The gas installation should be in accordance with BS6891.

2. The connection to the appliance is a 22mm copper tail. This is connected to the gas service cock (Fig. 9).

3. Ensure that the pipework from the meter to the appliance is of adequate size. Do not use pipes of a smaller diameter than the boiler gas connection (22mm).

6.6 Electrical Supply

1. External wiring must be correctly earthed, polarised and in accordance with current I.E.E. Wiring Regulations.

2. The mains supply is 230V ~ 50Hz fused at 3A.

NOTE: The method of connection to the electricity supply must facilitate complete electrical isolation of the appliance.

Connection may be via a fused double-pole isolator with a contact separation of at least 3mm in all poles and servicing the boiler and system controls only.

6.7 Flues & Ventilation

1. The room or space of installation must be ventilated to ensure the correct and safe operation of the boiler.

2. 125 and 150 models require one air vent, at high or low level. High and low level vents are required for 180 and 220 models. The vents must have a free area as follows:-

125 models	163cm^2
150 models	208cm^2
180 models	281cm^2 (high)
180 models	562cm^2 (low)
220 models	315cm^2 (high)
220 models	630cm^2 (low)

3. The vent(s) must communicate directly between outside and the room or space of installation, or using suitable ducting (all models) or indirectly via an opening of at least the same area (125 and 150 models only).

4. 125 and 150 models may be fitted in a cupboard or compartment within the room or space of installation providing the cupboard or compartment is ventilated as follows:-

125 models	388cm^2 (high)
125 models	776cm^2 (low)
150 models	478cm^2 (high)
150 models	956cm^2 (low)

Both vents must communicate with the same room or be on the same wall to outside air.

5. **180 and 220 models cannot be fitted in a compartment except of the type specified in BS6644 using a monodraught system.**

6. The flue system should be lined throughout its length.

7. Minimum flue length is 1m. There should be at least 1m of vertical flue from the boiler flue socket, and horizontal runs and 90° bends should be avoided.

8. If an existing chimney is used it must be fully swept before lining or connecting the boiler. Precautions should be taken to avoid condensation forming in the flue.

9. The flue diameter must be at least the same diameter as the connection on the boiler draught diverter.

10. A short length of purpose made flue may be required to connect the boiler flue spigot to the flue system.

11. The flue terminal must be of an approved type and be positioned above roof level.

7.0 Installation

7.1 Initial Preparation

The gas supply, gas type and pressure must be checked for suitability before connection.

1. Ensure that the floor or base on to which the boiler is to be fitted is clean and free from debris.

2. Install any pipework that will be behind the boiler, and any appropriate flue components.

3. Manoeuvre the boiler into position, seeking assistance as necessary. Check the clearances as shown in Section 6.3.

4. Undo the two securing screws and remove the top panel.

5. Disengage the front panel from the retaining magnets and hinge forwards. Unhook the panel from the lower hinge pins (Fig. 10) and place to the right hand side, taking care not to stretch the earth wire.

6. Remove the flue spigot from inside the case and fit it to the boiler draught diverter (Fig. 11). **Important: Only use the flue spigot supplied. Do not use a proprietary item.**

7. Connect the gas supply pipe and the system flow and return connections to the boiler (Fig. 12).

8. Connect the flue system to the flue spigot. Any flue pipe must be at least the same diameter as the connection on the boiler draught diverter

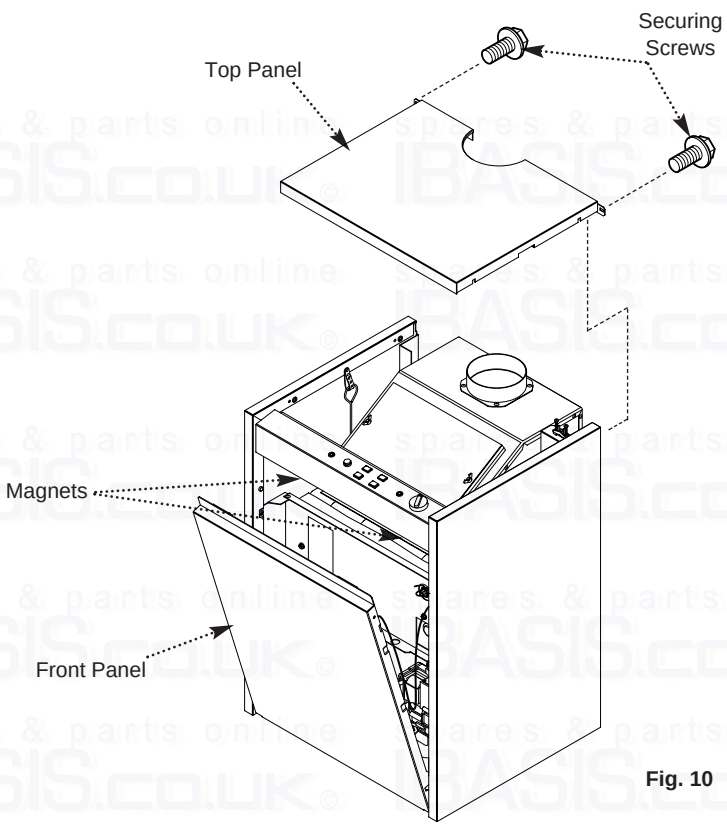

Fig. 10

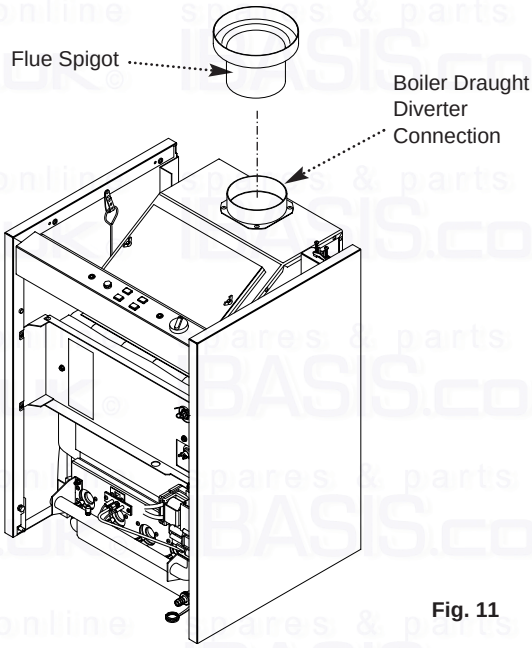

Fig. 11

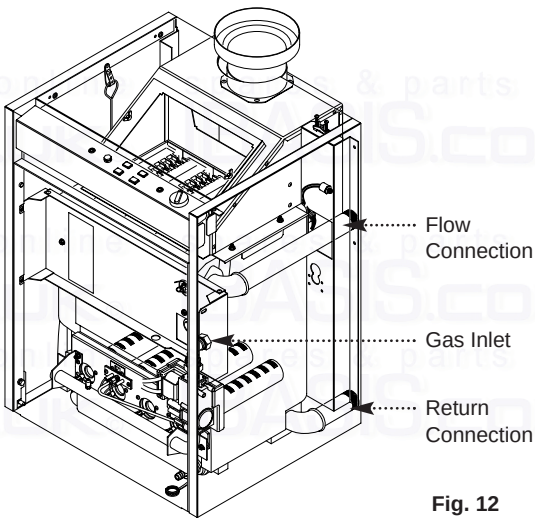

Fig. 12

7.0 Installation

7.2 Making the Electrical Connection

1. Undo the two securing screws from the rear of the top panel. Remove the panel (Fig. 13).

2. Swivel the two retaining plates through 90°. Lift the control box slightly and allow it to hinge forwards (Figs. 14 & 15). Undo the two retaining screws and remove the cover panel.

3. The input wiring to the boiler and the pump feed from the boiler should be routed through the grommet/clamps in the control box rear panel (Fig. 16).

4. Remove the clamps from the panel and slit the grommets with a suitable knife or blade.

5. Determine the length of the wiring and secure in the clamps.

6. Connect live, neutral, earth, and switched live to L, N, ⏚ & SL of the terminal strip. The pump live, neutral and earth should be connected to PL, PN & ⏚ of the terminal strip (Fig. 17).

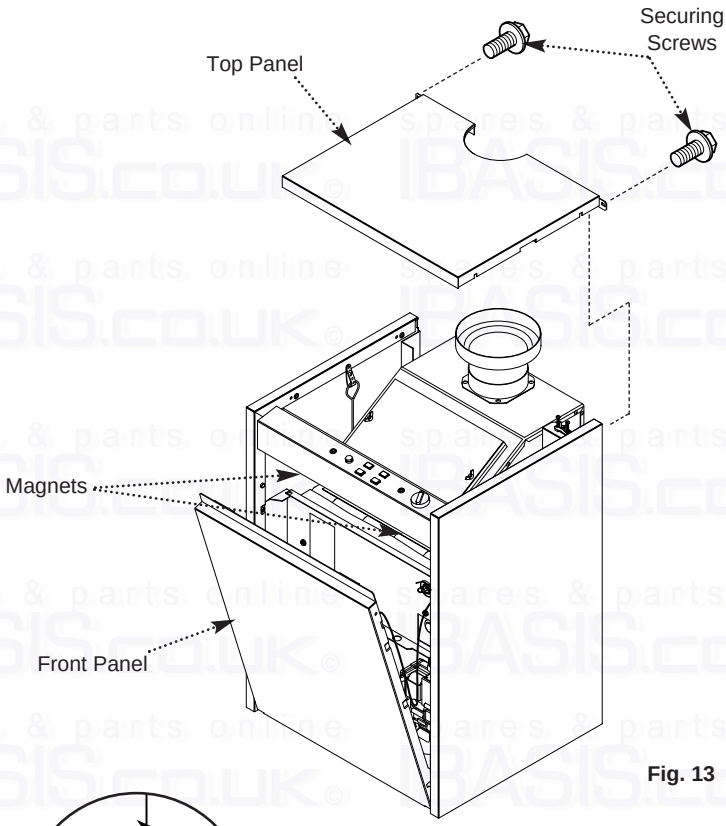

Fig. 13

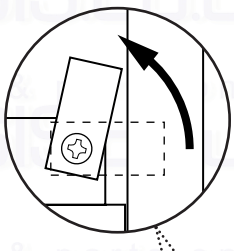

Fig. 14

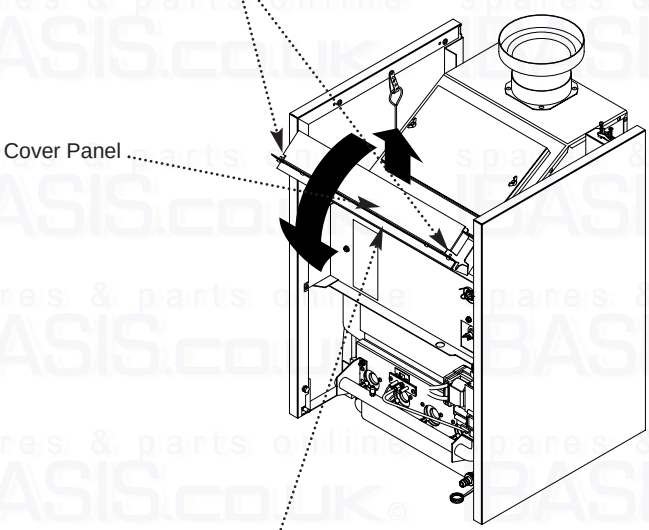

Fig. 15

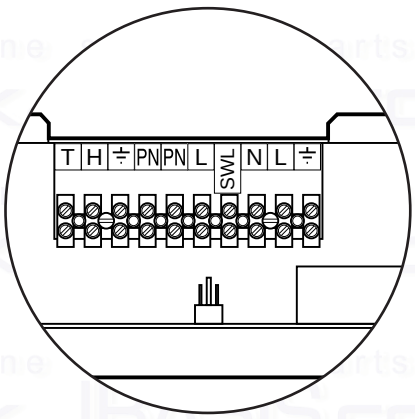

Fig. 17 Terminal Strip

Fig. 16

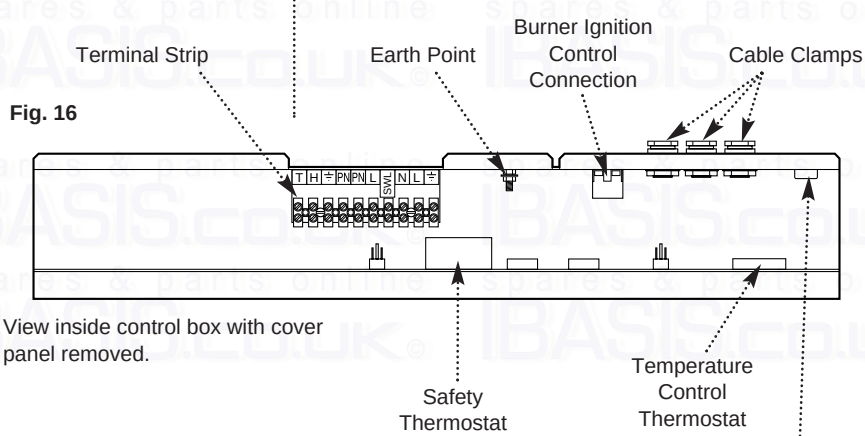

8.0 Commissioning the Boiler

8.1 Commissioning the Boiler

1. Reference should be made to BS 5449 Section 5 when commissioning the boiler.

2. Open the water supply to the boiler.

3. The system must be flushed in accordance with BS 7593, Section 5.1 of these instructions and the flushing agent manufacturers instructions.

4. Turn the gas supply on and purge the system according to BS 6891.

5. Test for gas soundness.

8.2 Checking the Burner Pressure

1. Slacken the pressure test point sealing screw and connect a pressure gauge (Fig. 19).

2. Turn on the gas and electrical supplies to the boiler and ensure that all external controls are calling for heat.

3. Set the temperature control to maximum (Fig. 18).

4. Check the burner setting pressure (see Section 4.0 “Technical Data”).

5. If necessary adjust the pressure by removing the gas valve governor cover and turning the screw to achieve the required pressure (Fig. 20).

5. Turn the boiler off and reassemble in reverse order. Tighten the pressure test point sealing screw (Fig. 19).

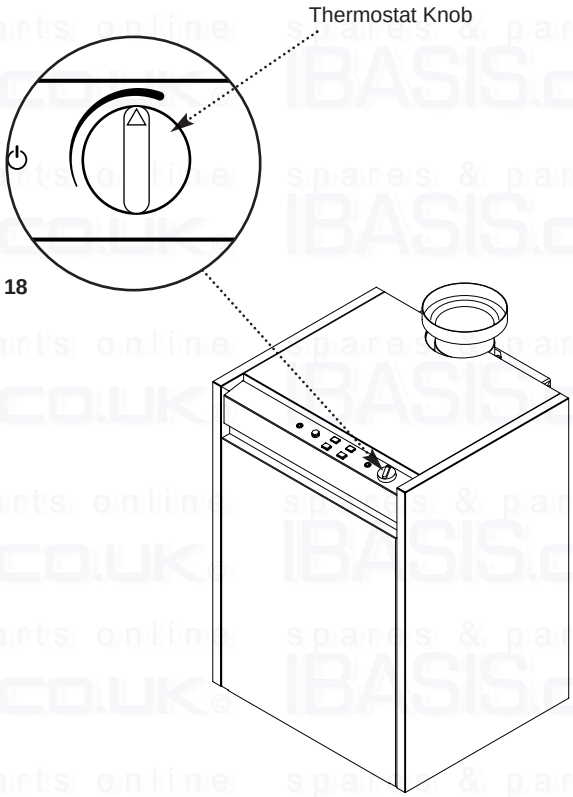

Fig. 18

Fig. 19

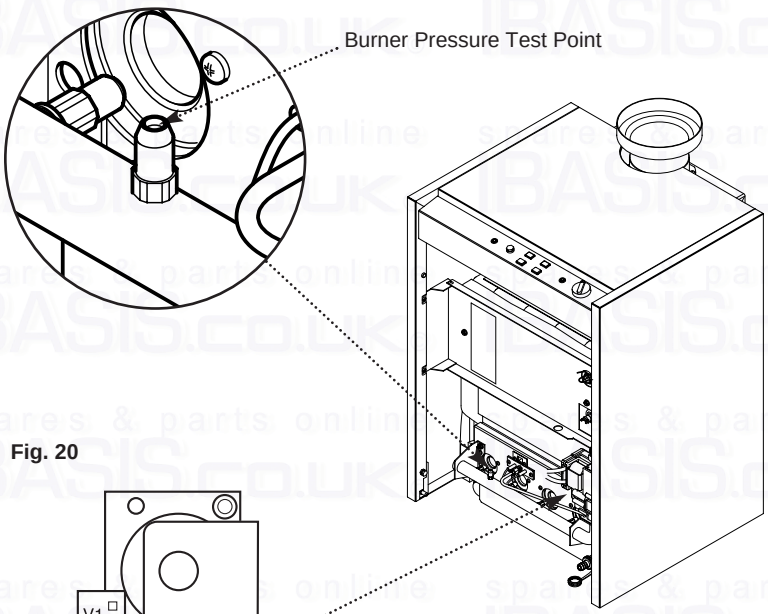

Fig. 20

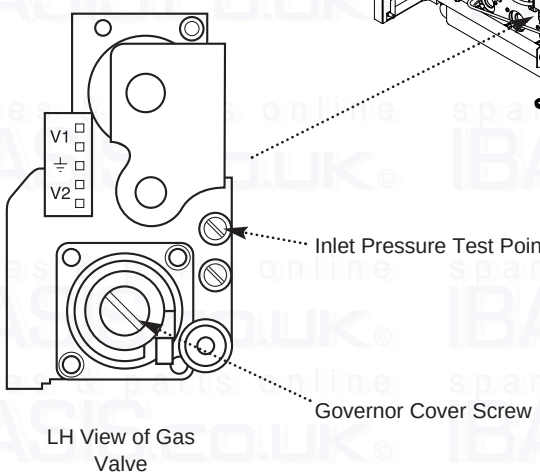

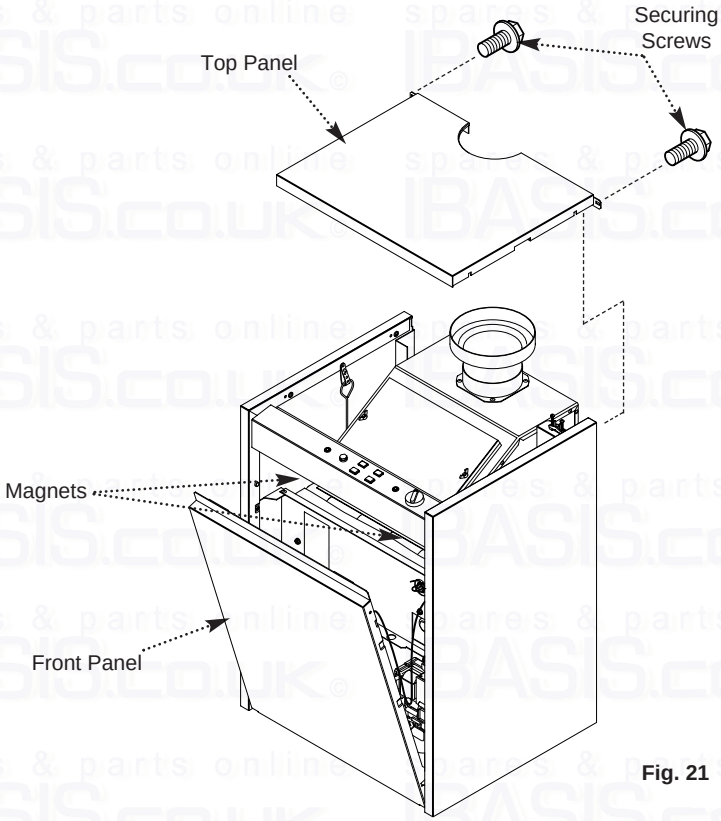

Fig. 21

8.3 Completion

1. Flush the system again and treat it in accordance with BS7593, Section 5.1 of these instructions and the flushing agent and inhibitor manufacturer's instructions.

2. Carefully read and complete all sections of the "Benchmark" Installation, Commissioning and Service Record Log Book that are relevant to the appliance and installation. The details of the Log Book will be required in the event of any warranty work. The Log Book must be handed to the user for safe keeping and each subsequent regular service visit recorded.

3. Instruct the user in the operation of the boiler controls and the function and resetting of the various safety devices

4. Hand over the User's Operating, Installation and Servicing Instructions and the Log Book, giving advice on the necessity of regular servicing.

5. Refit the outercase front and top panels (Fig. 21).

spares & parts online IBASIS.CO.UK ©

9.0 Servicing the Boiler

9.1 Annual Servicing

1. For reasons of safety and economy, it is recommended that the boiler is serviced annually. Servicing must be performed by a competent person.

2. After servicing, complete the relevant section of the “Benchmark” Installation, Commissioning and Service Record Log Book. This should be in the possession of the user.

3. Ensure that the boiler is cool.

4. Ensure that both the gas and electrical supplies to the boiler are isolated.

5. Undo the two securing screws from the rear of the top panel. Remove the panel (Fig. 22).

6. Disengage the front panel from the retaining magnets and hinge forwards. Unhook the panel from the lower hinge pins (Fig. 22) and place to the right hand side, taking care not to stretch the earth wire.

7. Undo the wing nuts securing the combustion box top panel (Fig. 23). Remove the panel.

8. Undo the disconnecting union on the gas inlet. Remove the screw securing the burner ignition control to the gas valve. Draw the control off the valve (Fig. 24).

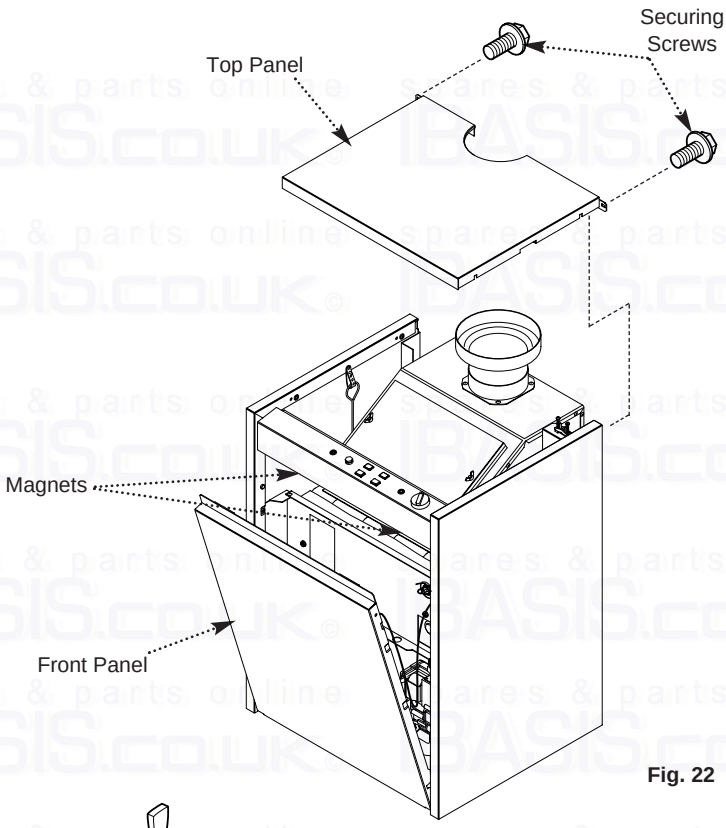

Fig. 22

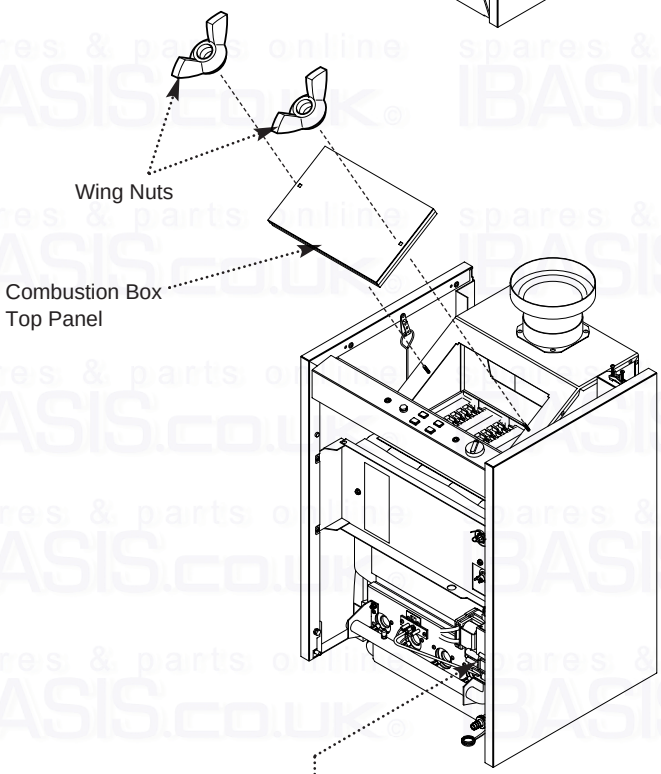

Fig. 23

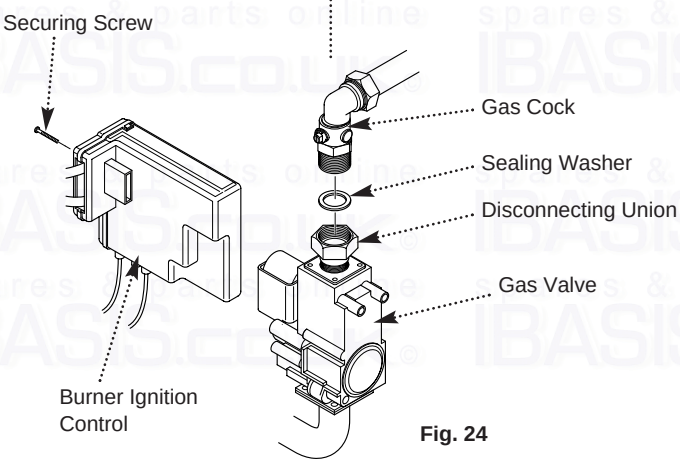

Fig. 24

spares & parts online IBASIS.CO.UK

9.1 Annual Servicing (Cont)

9. Undo the two nuts securing the valve, injector manifold and burner assembly to the boiler (Figs. 25 & 27).

10. Hold the manifold and carefully draw the assembly away from the boiler. Retain the washer from the gas inlet connection.

11. Brush any dirt or debris from the burner skins. Examine the burners for blocked ports. Any blockage can be removed using a fine wire brush.

12. Inspect the pilot assembly, electrodes and injectors (Fig. 26). Replace if necessary.

13. Ensure that the spark and sensing leads are clipped into the separation brackets and do not cross over each other.

14. Slide a suitable sheet of paper or cloth under the boiler heat exchanger (Fig. 29).

15. Unclip the brush from the top edge of the left hand side panel clean between the boiler fins (Fig. 28 & 29). Check for any blockage.

16. Carefully withdraw the sheet and dispose of in a proper manner. Check under the boiler and remove any fallen dirt or debris.

17. Reassemble in reverse order of dismantling and recommission.

18. Complete the relevant section of the "Benchmark" Installation, Commissioning and Service Record Log Book and hand it back to the user.

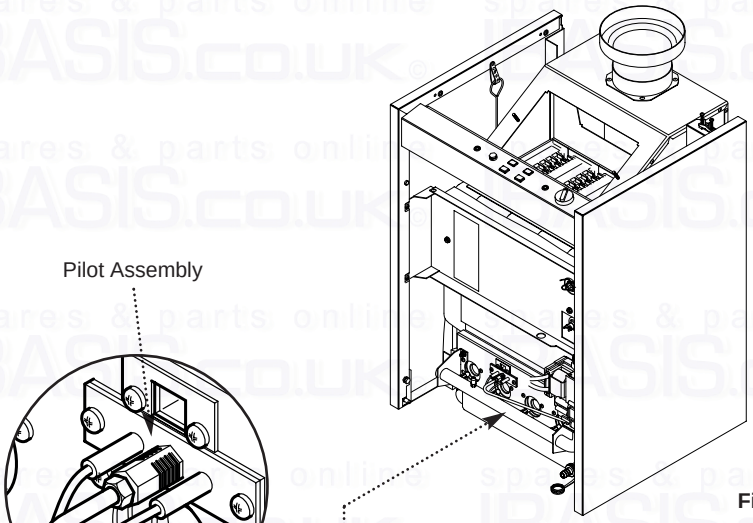

Fig. 25

Fig. 26

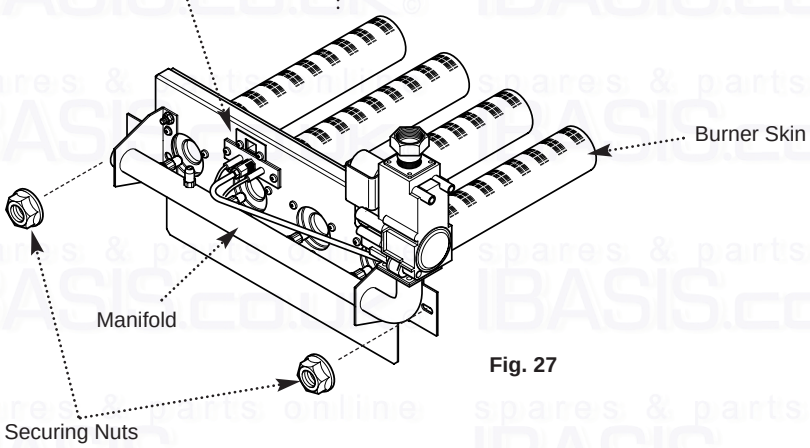

Fig. 27

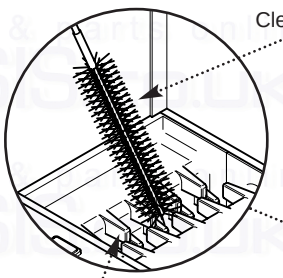

Fig. 28

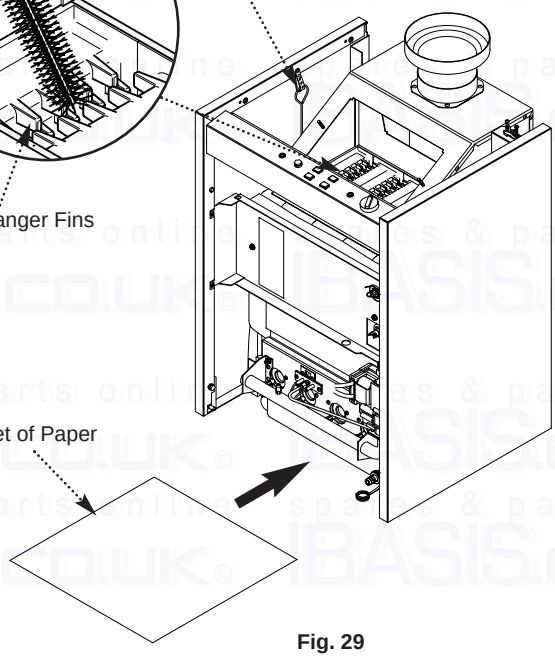

Fig. 29

10.0 Changing Components

IMPORTANT: When changing components ensure that both the gas and electrical supplies to the boiler are isolated before any work is started.

Undo the two securing screws from the rear of the top panel. Remove the panel (Fig. 30).

Disengage the retaining magnets at the top of the front panel and hinge forwards. Unhook the panel from the lower hinge pins (Fig. 30).

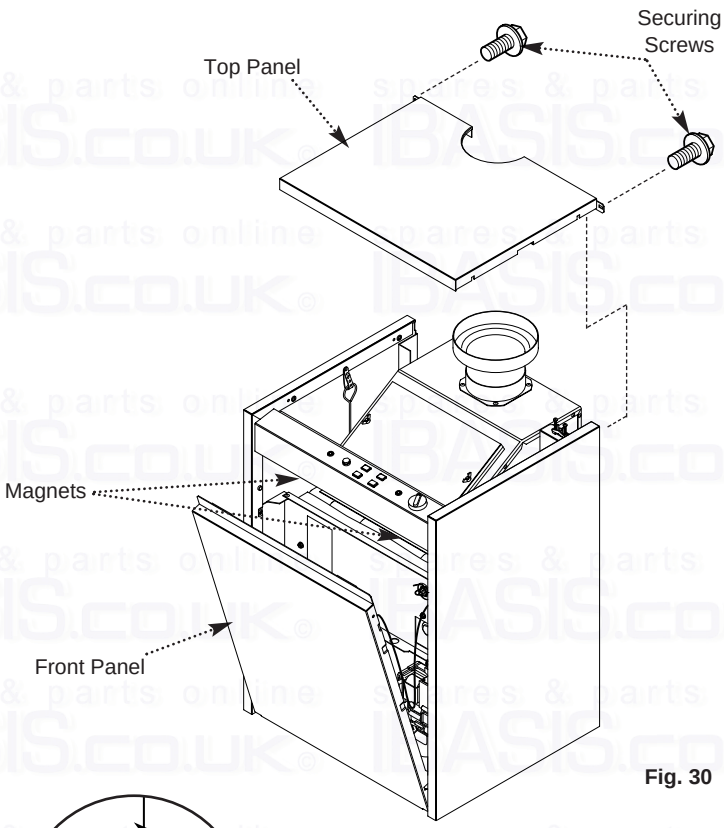

Fig. 30

10.1 Boiler Thermostat

1. Swivel the two retaining plates (Fig. 31) through 90°. Lift the control box slightly and allow it to hinge forwards. Undo the two retaining screws and remove the cover panel (Fig. 32).

2. After noting their position remove the wires from the thermostat body. Turn the thermostat knob fully anticlockwise and pull it off (Fig. 33).

3. Remove the screws securing the thermostat to the control panel and pull off the earth wire (Fig. 34).

4. Pull the spring clip off the thermostat pocket. Withdraw both the boiler and overheat thermostat phials and the spacer tube from the pocket (Fig. 33).

5. Take the new thermostat and turn the operating shaft fully anticlockwise.

6. Reassemble in reverse order. The securing screw incorporating the pin must be used on the right (Fig. 34). Ensure both phials and the spacer tube are pushed fully into the thermostat pocket and the capillaries are retained by the clip.

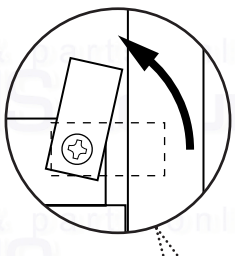

Fig. 31

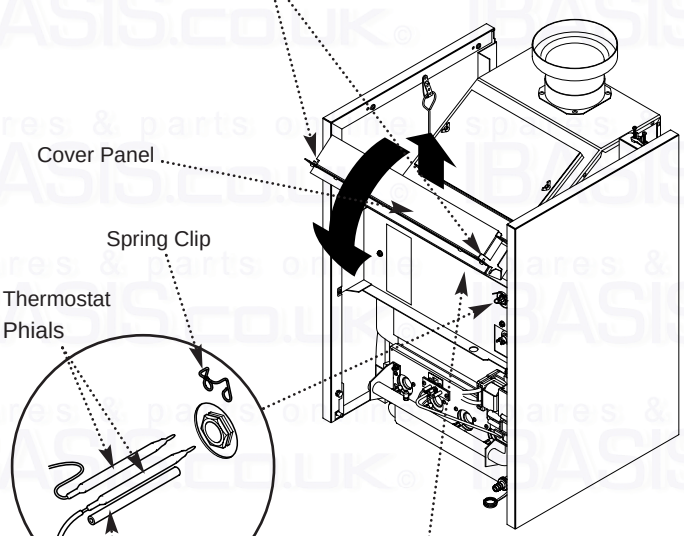

Fig. 32

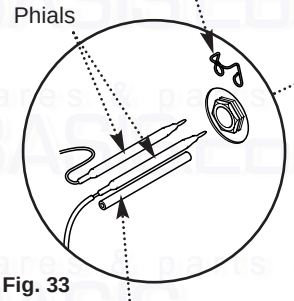

Fig. 33

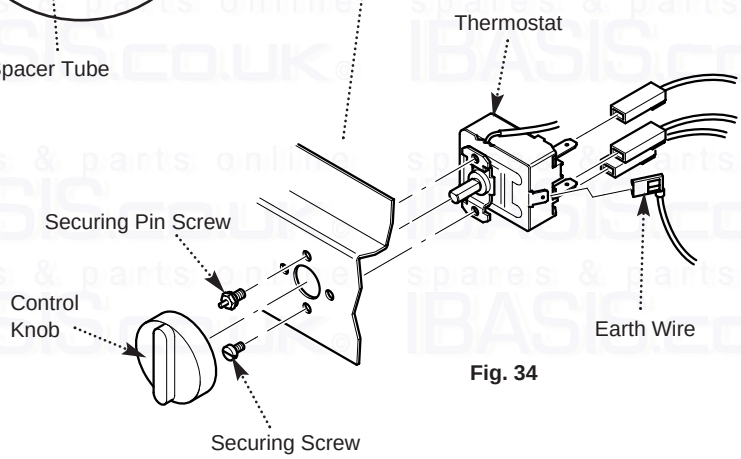

Fig. 34

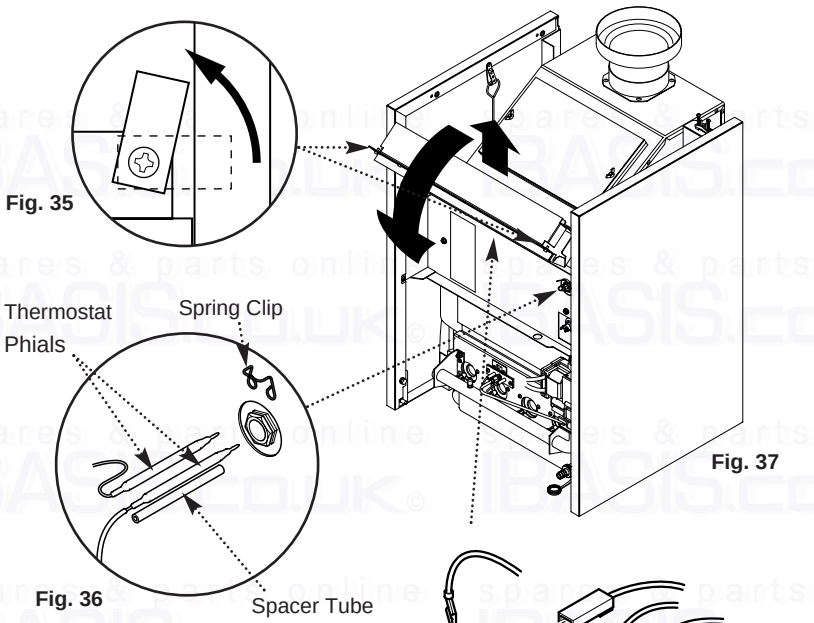

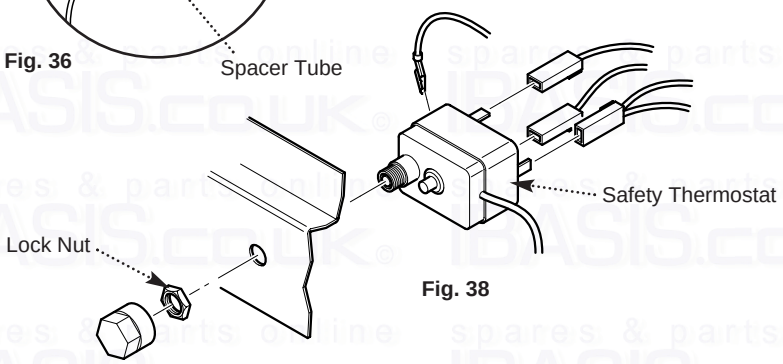

10.2 Boiler Safety Thermostat

1. Swivel the two retaining plates through 90°. Lift the control box slightly and allow it to hinge forwards. Undo the two retaining screws and remove the cover panel (Figs. 35 & 37).

2. After noting their position pull the wires from the thermostat body (Fig. 38).

3. Remove the locknut securing the thermostat to the control panel (Fig. 38).

4. Pull the spring clip off the thermostat pocket. Withdraw both the boiler and overheat thermostat phials and the spacer tube from the pocket (Fig. 36).

5. Reassemble in reverse order, ensuring both phials and the spacer tube are pushed fully into the thermostat pocket and the capillaries are retained by the clip.

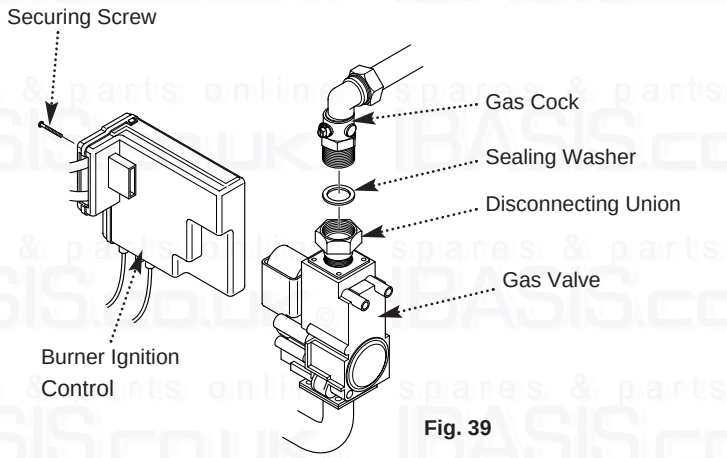

10.3 Gas Valve

1. Undo the disconnecting union on the gas inlet. Remove the screw securing the burner ignition control to the gas valve. Draw the control off the valve (Fig. 39).

2. Undo the two nuts securing the valve, injector manifold and burner assembly to the boiler (Fig. 40).

3. Hold the manifold and carefully draw the assembly away from the boiler. Retain the washer from the gas inlet connection.

4. Undo the pilot feed pipe from the gas valve, and slacken it at the pilot burner to allow it to swing clear.

5. Undo the four screws securing the gas valve to the injector manifold. Remove the valve and seal (Fig. 41).

6. Check the condition of the seal previously removed before fitting the new valve to the injector manifold. Replace as necessary.

7. Reassemble in reverse order and check the condition of the seal to be used on the disconnecting union. Replace as necessary.

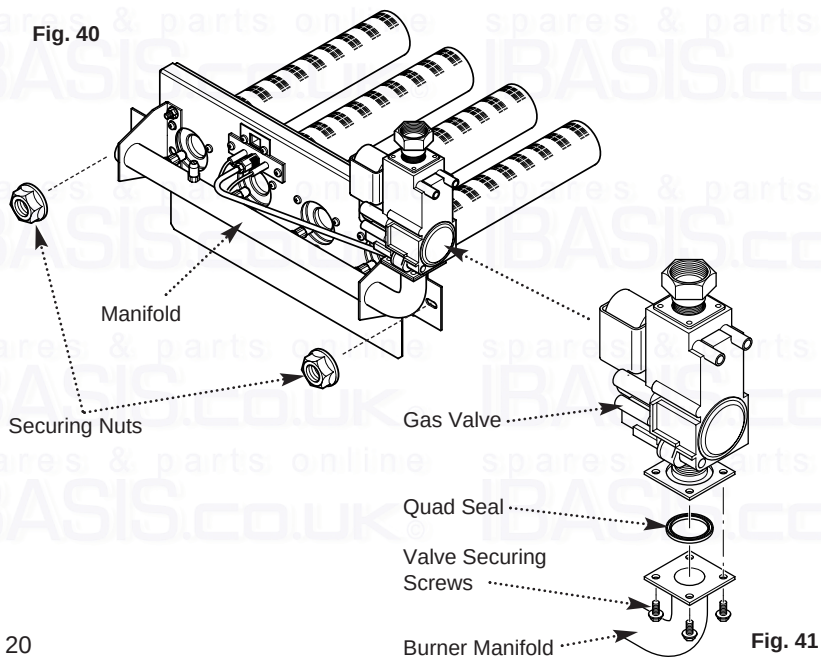

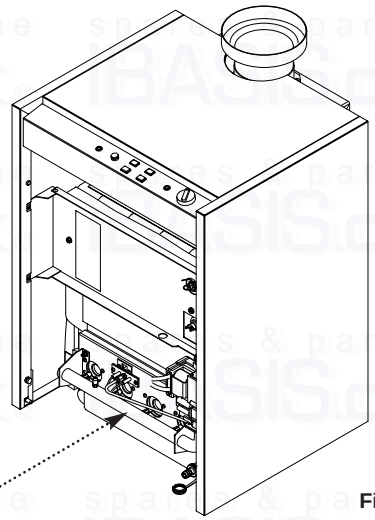

Fig. 42

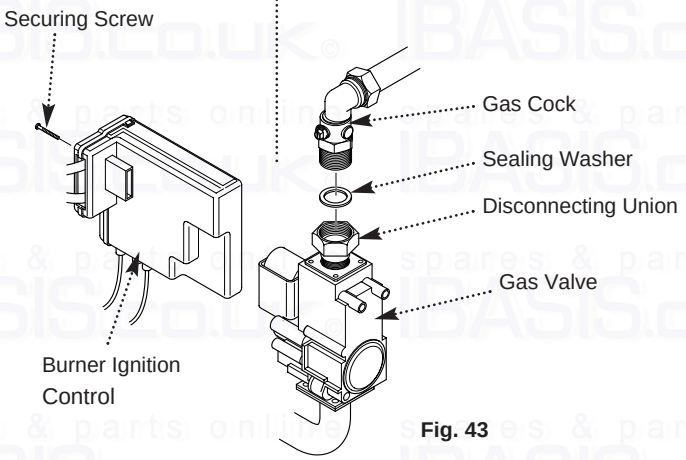

Fig. 43

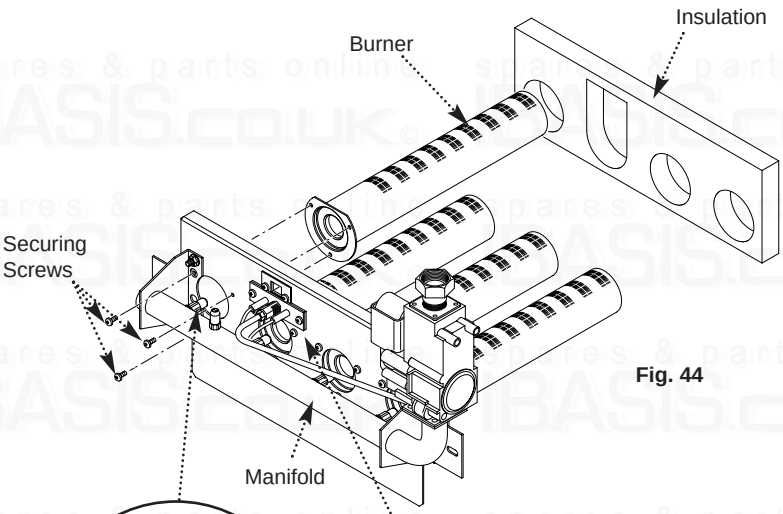

Fig. 44

Fig. 45

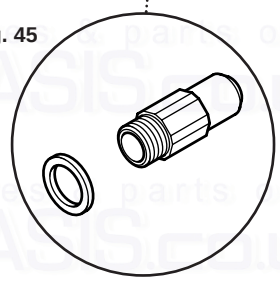

Injector and Washer

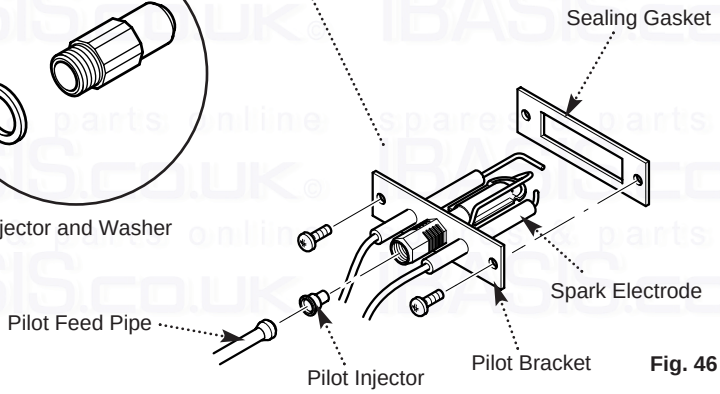

Fig. 46

10.4 Burner(s)

1. Undo the disconnecting union on the gas inlet. Remove the screw securing the burner ignition control to the gas valve. Draw the control off the valve (Fig. 43).

2. Undo the two nuts securing the valve, injector manifold and burner assembly to the boiler.

3. Hold the manifold and carefully draw the assembly away from the boiler. Retain the washer from the gas inlet connection.

4. Carefully draw the insulation piece away over the burners (Fig. 44).

5. Undo the screws securing the burner(s) to be replaced. Remove the burner(s) (Fig. 44).

6. Reassemble in reverse order, replacing the insulation piece if it is damaged.

10.5 Injector(s) (Figs. 44 & 45)

1. Using a suitable spanner undo from the manifold the injector(s) to be replaced.

2. Reassemble in reverse order using a new sealing washer for each injector.

10.6 Pilot Assembly

1.Disconnect and remove the pilot feed pipe. Pull the electrode leads off the gas valve burner ignition control and unclip them from the separation brackets.

2. Undo the pilot bracket securing screws. Withdraw the bracket from the burner mounting plate. Carefully remove the pilot injector from the bracket (Figs. 44 & 46).

3. Inspect the injector and replace if it is blocked or damaged. Check the condition of the pilot bracket sealing gasket and replace if necessary.

4. The new pilot assembly must be fitted as shown, with the spark electrode to the right (Fig. 46).

5. Clip the electrode leads into the separation brackets. Ensure that the leads do not cross over each other.

6. Reassemble in reverse order.

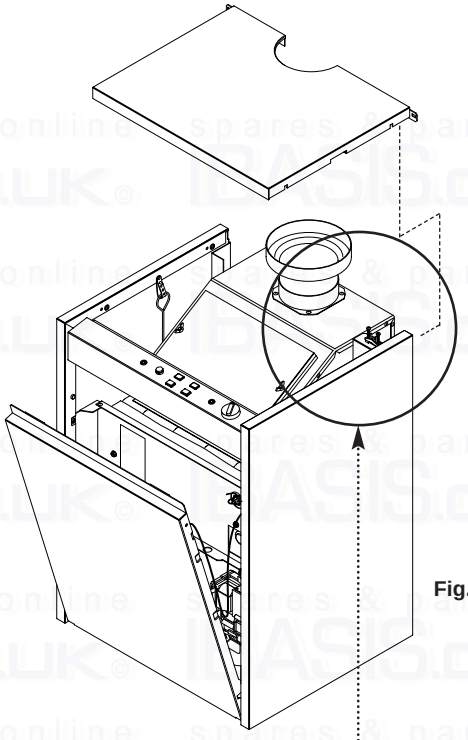

Fig. 47

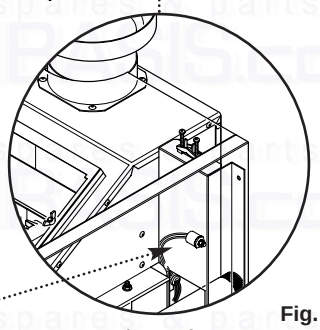

Fig. 48

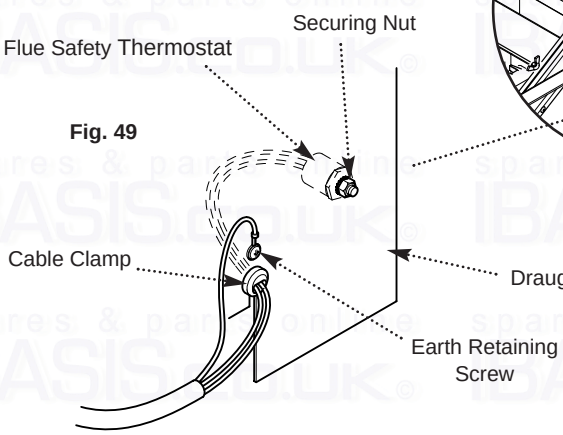

Fig. 49

10.7 Flue Safety Thermostat

1. Undo the nut securing the Flue Safety Thermostat to the draught diverter. Ease the cable clamp from the slot in the draught diverter (Figs. 47 & 48).

2. Undo the screw retaining the earth wire to the boiler and disconnect the plug on the Flue Safety Thermostat cable from the boiler harness (Fig. 49).

3. Reassemble in reverse order. Check the operation of the Safety Thermostat by capping the flue. The boiler should extinguish within three minutes.

10.8 Burner Ignition Control (Fig. 50)

1. Remove the screw securing the burner ignition control to the gas valve. Draw the control off the valve.

2. Pull the electrode leads off the burner ignition control.

3. Prise apart the three barbs securing the control cover. Remove the cover.

4. Undo the screws securing the cable clamp to the control and disconnect the edge connector from the control P.C.B.

5. Fit the new burner ignition control and reassemble in reverse order.

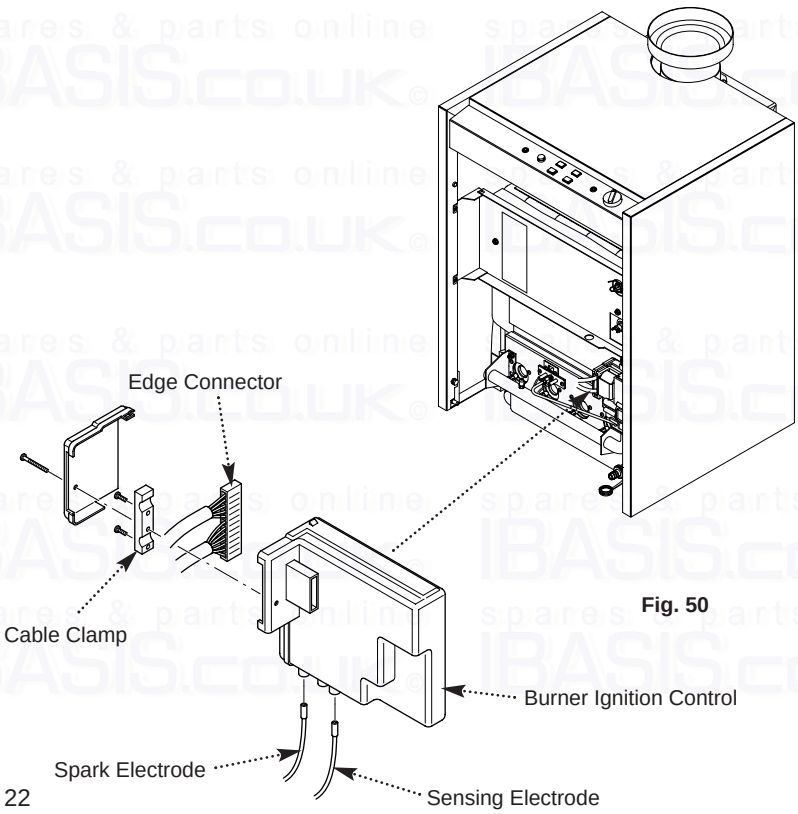

Fig. 50

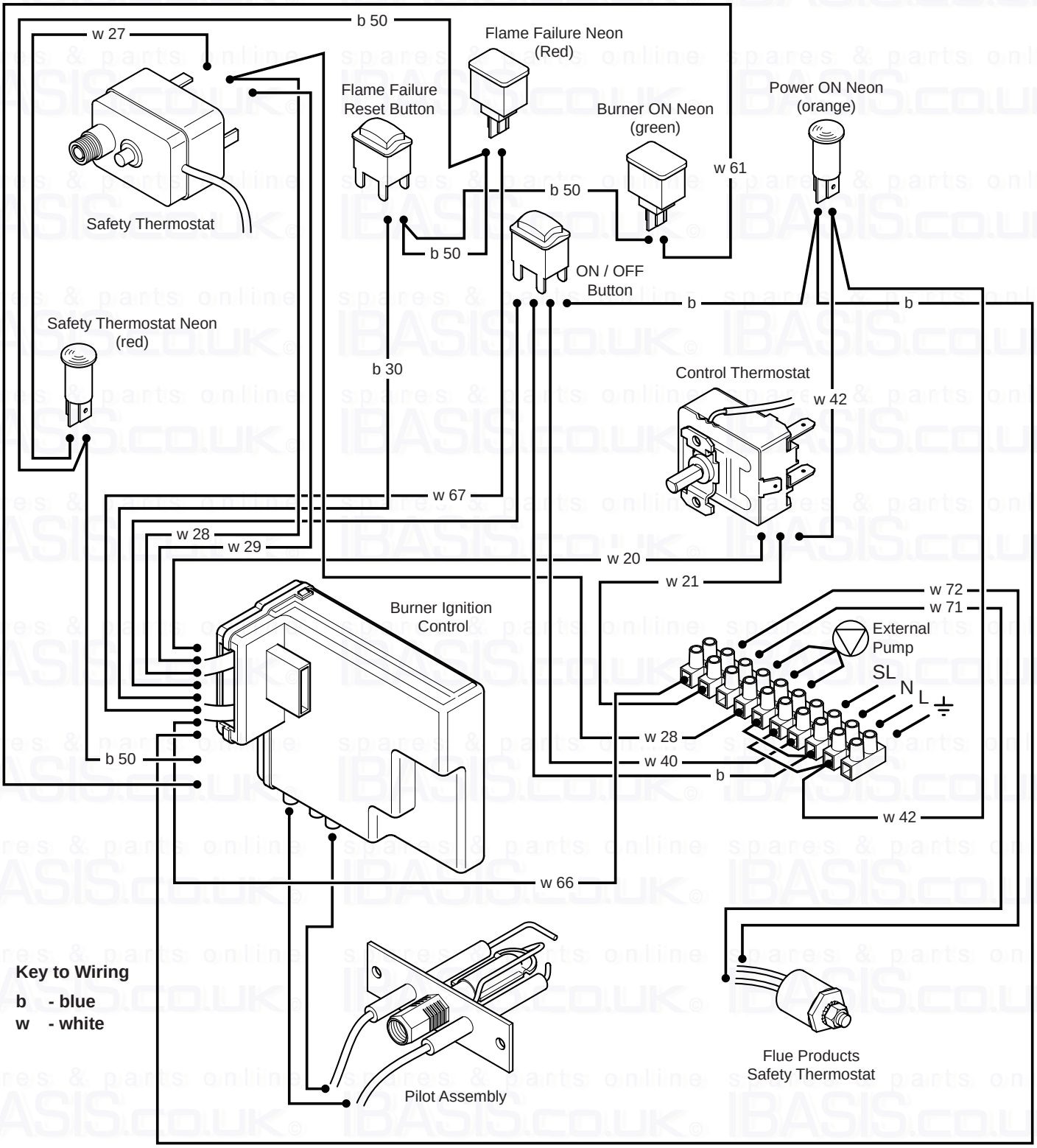
b 50
w 27
Flame Failure Neon
(Red)
Flame Failure
Reset Button
Power ON Neon
(orange)
Burner ON Neon
(green)
w 61
b 50
Safety Thermostat
b 50
ON / OFF
Button
b
b
Safety Thermostat Neon
(red)
b 30
Control Thermostat
w 42
w 67
w 28
w 29
w 20
w 21
w 72
w 71
Burner Ignition
Control
External
Pump
SL
N
L
w 28
w 40
b
b 50
w 42
w 66
Key to Wiring
b - blue
w - white
Pilot Assembly
Flue Products
Safety Thermostat

12.1 Fault Finding

1. This page shows the configuration of the plug and socket on the Burner Ignition Control supply (Fig. 51). The socket is part of the boiler harness and the plug is on the lead connected to the Burner Ignition Control.

2. Fig. 52 illustrates the layout of the edge connector on the Burner Ignition Control.

Boiler Harness Burner Ignition Controller Socket

The following table indicates which wires from the main harness are connected to the socket.

Position	Wire Identification
A	W20
B	W41 (linked to H)
C	W66
D	B50
E	W29
F	B30
G	Neutral to 'N' on Terminal Strip
H	W41 (linked to B)
J	W28
K	W67
L	Earth
M	W61

View of Socket end on

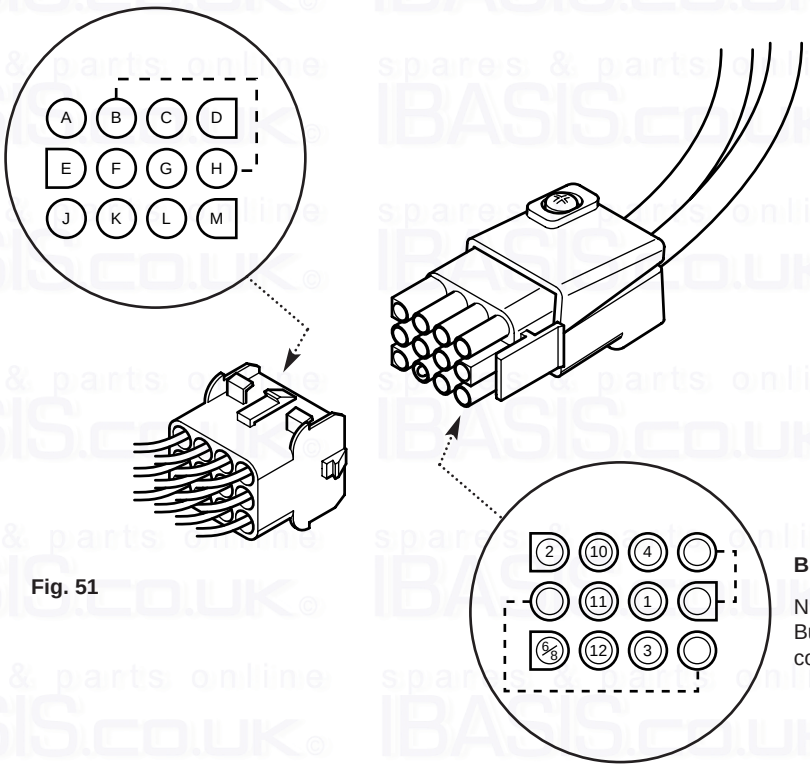

Fig. 51

Burner Ignition Controller Harness Plug

Numbers refer to pin position on edge connector at Burner Ignition Controller to which this plug is connected. Dotted lines indicate link wires.

View of Harness Plug end on

Layout of Edge Connector on Ignition Controller Harness

Fig. 52

Numbers correspond to pins on Burner Ignition Controller

1 & 11 - Neutral
5 & 9 - Linked
7 - Unused
12 - Earth

12.0 Fault Finding

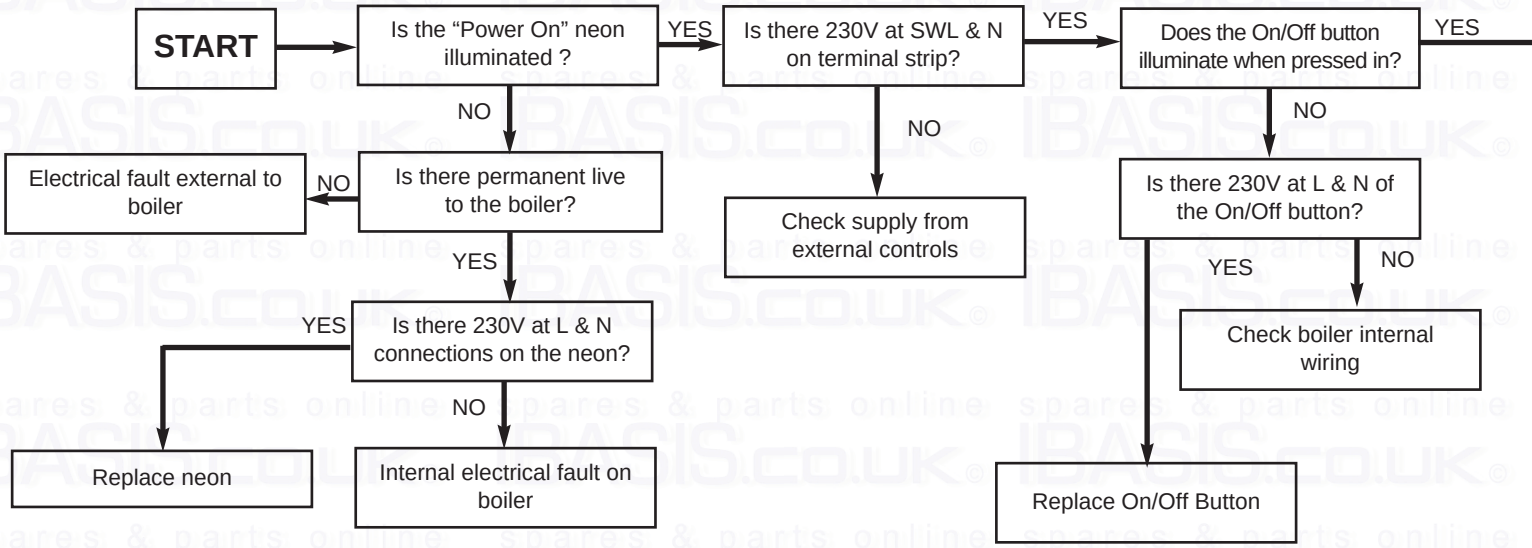

CARRY OUT THE FOLLOWING PRELIMINARY CHECKS BEFORE COMMENCING FAULT FINDING

1. Check that gas, water and electrical supplies are available at the boiler. Electrical supply = 230V ~ 50 Hz. The preferred minimum gas pressure is 19.5mbar (natural gas).
2. Carry out electrical system checks, i.e. Ground Continuity, Resistance to Ground, Short Circuit and Polarity with a suitable meter. Note: Repeat these checks after servicing or fault finding.
3. Ensure all external controls are calling for heat and check all external and internal fuses. Before servicing or replacement of parts ensure the gas and electrical supplies are isolated.

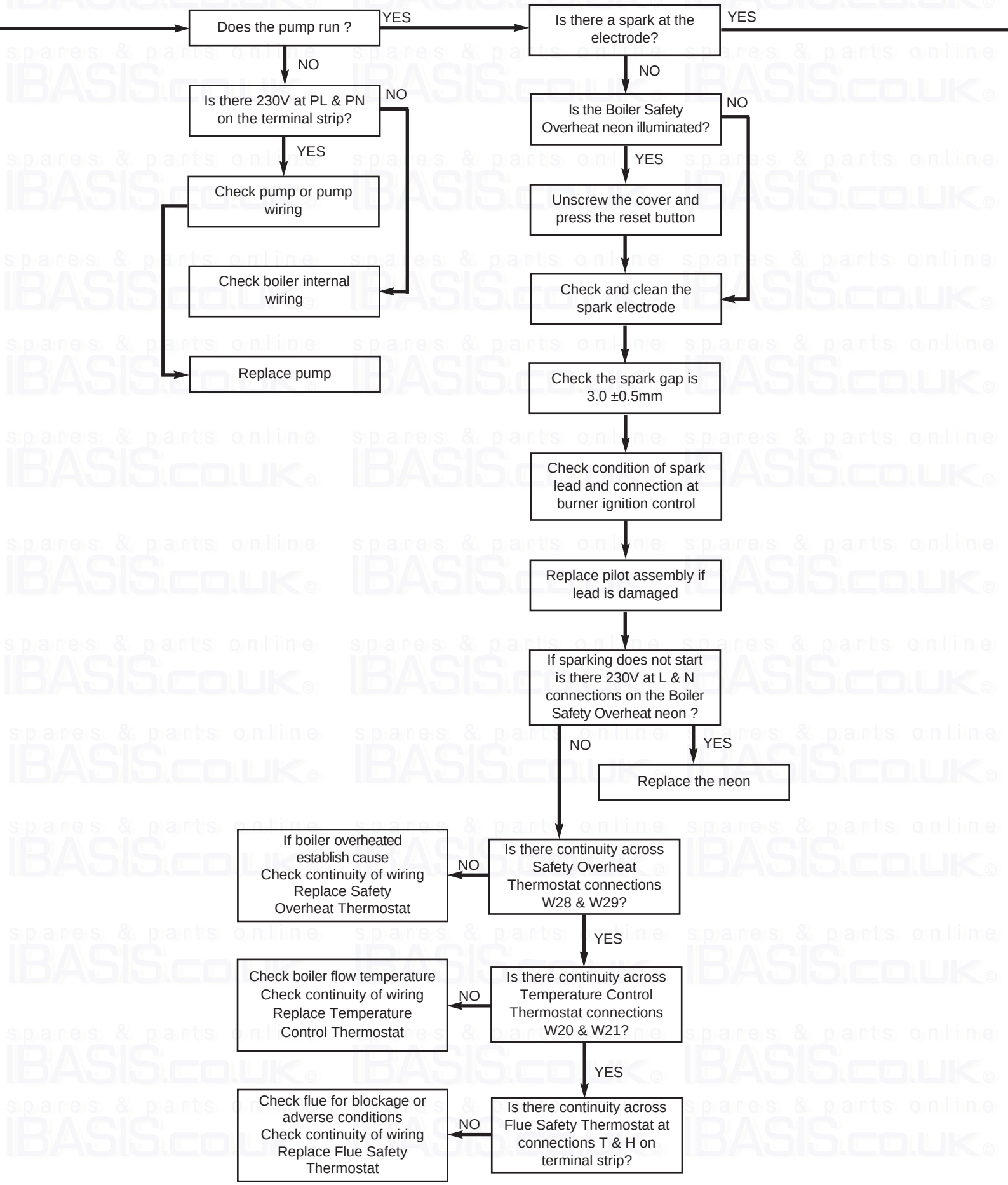
Does the pump run ?
YES
NO
Is there 230V at PL & PN on the terminal strip?
NO
YES
Check pump or pump wiring
Check boiler internal wiring
Replace pump
Is there a spark at the electrode?
YES
NO
Is the Boiler Safety Overheat neon illuminated?
NO
YES
Unscrew the cover and press the reset button
Check and clean the spark electrode
Check the spark gap is 3.0 ±0.5mm
Check condition of spark lead and connection at burner ignition control
Replace pilot assembly if lead is damaged
If sparking does not start is there 230V at L & N connections on the Boiler Safety Overheat neon ?
NO
YES
Replace the neon
Is there continuity across Safety Overheat Thermostat connections W28 & W29?
NO
If boiler overheated establish cause Check continuity of wiring Replace Safety Overheat Thermostat
YES
Is there continuity across Temperature Control Thermostat connections W20 & W21?
NO
Check boiler flow temperature Check continuity of wiring Replace Temperature Control Thermostat
YES
Is there continuity across Flue Safety Thermostat at connections T & H on terminal strip?
NO
Check flue for blockage or adverse conditions Check continuity of wiring Replace Flue Safety Thermostat

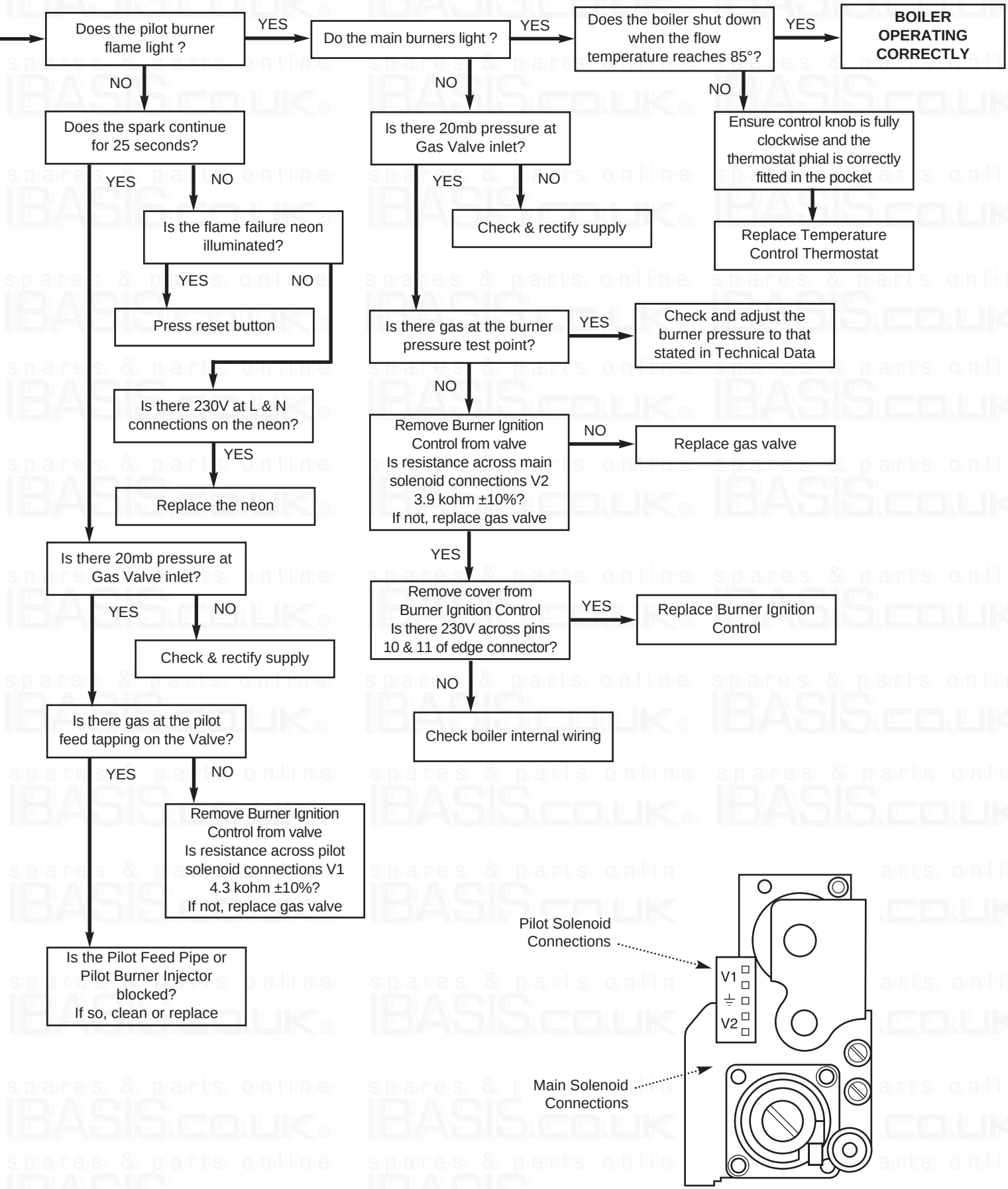
Does the pilot burner flame light ?
YES
Do the main burners light ?
YES
Does the boiler shut down when the flow temperature reaches 85°?
YES
BOILER OPERATING CORRECTLY
NO
Does the spark continue for 25 seconds?
NO
Is there 20mb pressure at Gas Valve inlet?
NO
Ensure control knob is fully clockwise and the thermostat phial is correctly fitted in the pocket
Replace Temperature Control Thermostat
YES
NO
Is the flame failure neon illuminated?
YES
NO
Check & rectify supply
Press reset button
Is there gas at the burner pressure test point?
YES
Check and adjust the burner pressure to that stated in Technical Data
Is there 230V at L & N connections on the neon?
NO
Remove Burner Ignition Control from valve
Is resistance across main solenoid connections V2 3.9 kohm ±10%?
If not, replace gas valve
NO
Replace gas valve
YES
Replace the neon
Is there 20mb pressure at Gas Valve inlet?
YES
NO
YES
Remove cover from Burner Ignition Control
Is there 230V across pins 10 & 11 of edge connector?
YES
Replace Burner Ignition Control
Check & rectify supply
NO
Check boiler internal wiring
Is there gas at the pilot feed tapping on the Valve?
YES
NO
Remove Burner Ignition Control from valve
Is resistance across pilot solenoid connections V1 4.3 kohm ±10%?
If not, replace gas valve
Is the Pilot Feed Pipe or Pilot Burner Injector blocked?
If so, clean or replace
Pilot Solenoid Connections
V1
V2
Main Solenoid Connections

13.0 Short Parts List

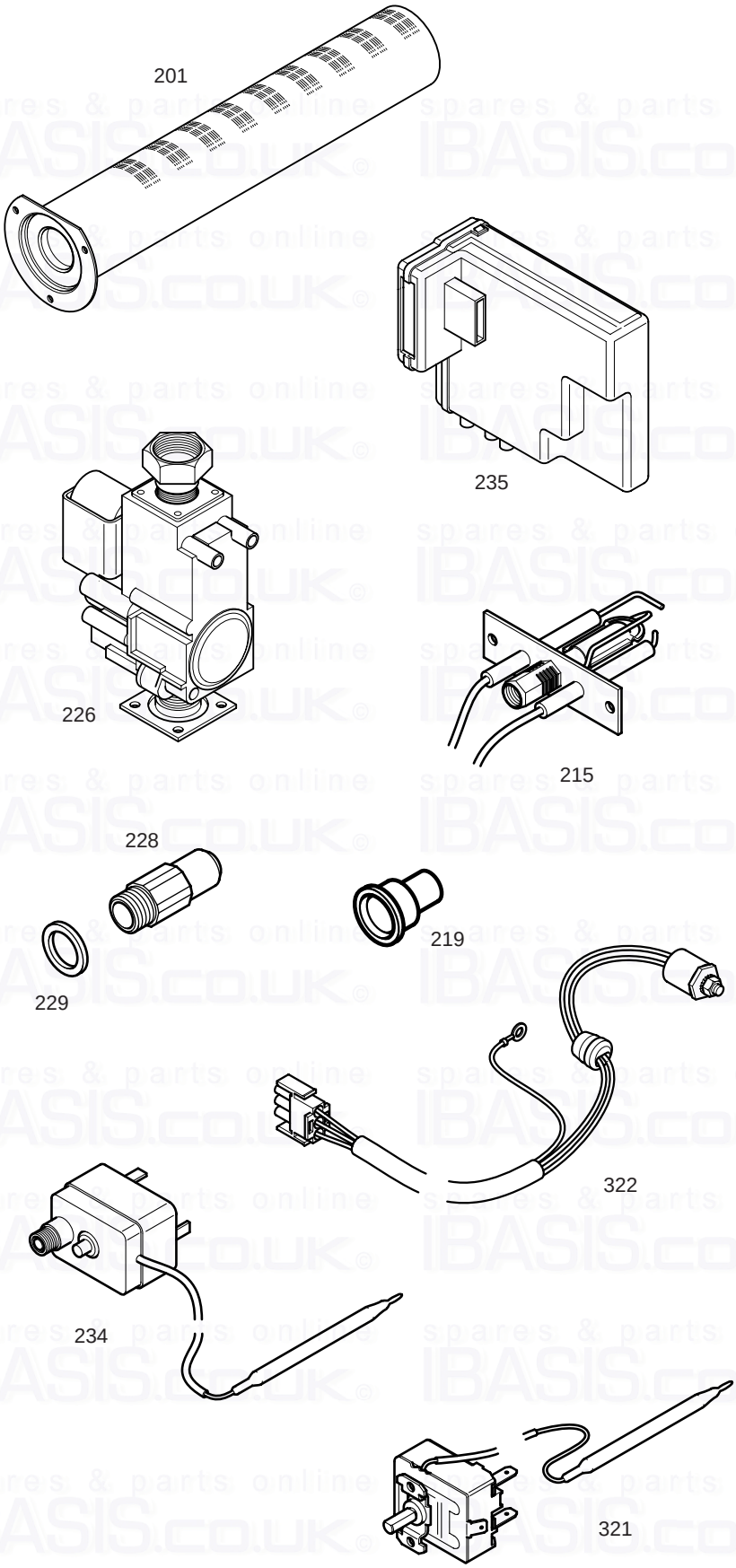

Short Parts List

Key No.	G.C. No.	Description	Manufacturers Part No.
226		Gas Valve Assembly	V501790
201	E03-614	Burner	V17000837
228	E03-653	Main Burner Injector	V17003199
229	E03-652	Injector Washer	V17006504
321		Control Thermostat	V133624
234		Safety Thermostat	V17006955
215		Pilot Burner Assembly	V133535
235		Burner Ignition Control	V17000601
322		Flue Products Safety Thermostat	V500540
219		Pilot Injector	V17003216