You can rely on POTTERTON

Installation & Service Instructions

Precision

Condensing Central Heating Boiler

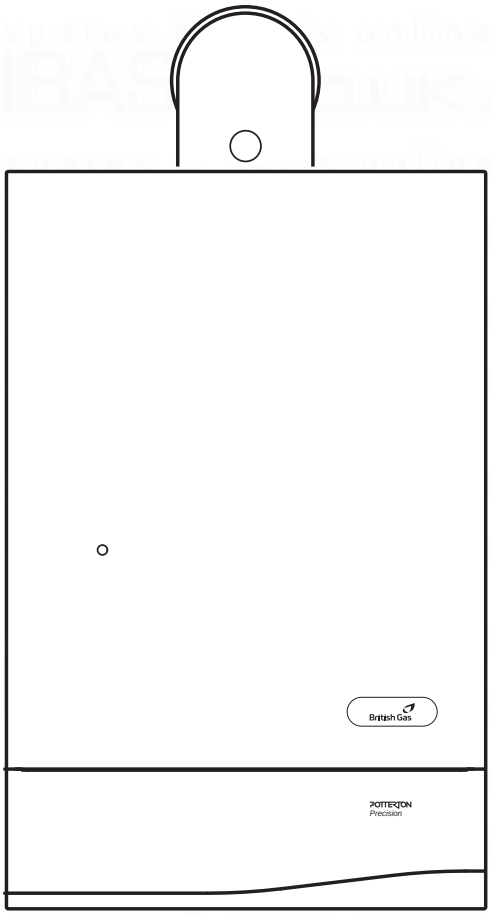

www.britishgas.co.uk

HomeCare® 0800 048 1000

British Gas

Scottish Gas

These instructions include the Benchmark Commissioning Checklist
and should be left with the user for safe keeping.

spares & parts online IBASIS.CO.UK

Natural Gas

British Gas Potterton Precision
G.C.N° 41 - 592 - 33

Building Regulations and the Benchmark Commissioning Checklist

Building Regulations (England & Wales) require notification of the installation of a heating appliance to the relevant Local Authority Building Control Department. This can be achieved via a Competent Persons Self Certification Scheme as an option to notifying the Local Authority directly.

The Health & Safety Executive operates the 'Gas Safe Register', a self-certification scheme for gas heating appliances.

These arrangements represent a change from the situation whereby compliance with Building Regulations was accepted as being demonstrated by completion of the Benchmark Logbook (which was then left on site with the customer).

With the introduction of Self Certification Schemes, the Benchmark Logbook is being withdrawn. However, a similar document in the form of a commissioning checklist and service interval record is incorporated at the back of these instructions.

This company is a member of the Benchmark initiative and fully supports the aims of the programme. Its aim is to improve the standards of installation and commissioning of central heating systems in the UK and to encourage the regular servicing of all central heating systems to ensure safety and efficiency.

Building Regulations require that installations should comply with manufacturer's instructions. It is therefore important that the commissioning checklist is completed by the installer. The relevant section of Building Regulations only relates to dwellings. Therefore the checklist only applies if the appliance is being installed in a dwelling or some related structure.

The flowchart opposite gives guidance for installers on the process necessary to ensure compliance with Building Regulations.

The Benchmark Scheme

Benchmark places responsibilities on both manufacturers and installers. The purpose is to ensure that customers are provided with the correct equipment for their needs, that it is installed, commissioned and serviced in accordance with the manufacturer's instructions by competent persons and that it meets the requirements of the appropriate Building Regulations. The Benchmark Checklist can be used to demonstrate compliance with Building Regulations and should be provided to the customer for future reference.

Installers are required to carry out installation, commissioning and servicing work in accordance with the Benchmark Code of Practice which is available from the Heating and Hotwater Industry Council who manage and promote the Scheme. Visit **www.centralheating.co.uk** for more information.

CE 0086

energy saving trust recommended
Certification Mark

benchmark COLLECTIVE MARK
THE MARK OF QUALITY FOR THE INSTALLATION, COMMISSIONING AND SERVICING OF DOMESTIC HEATING AND HOT WATER SYSTEMS

BSI™
ISO 9001
FM 00866

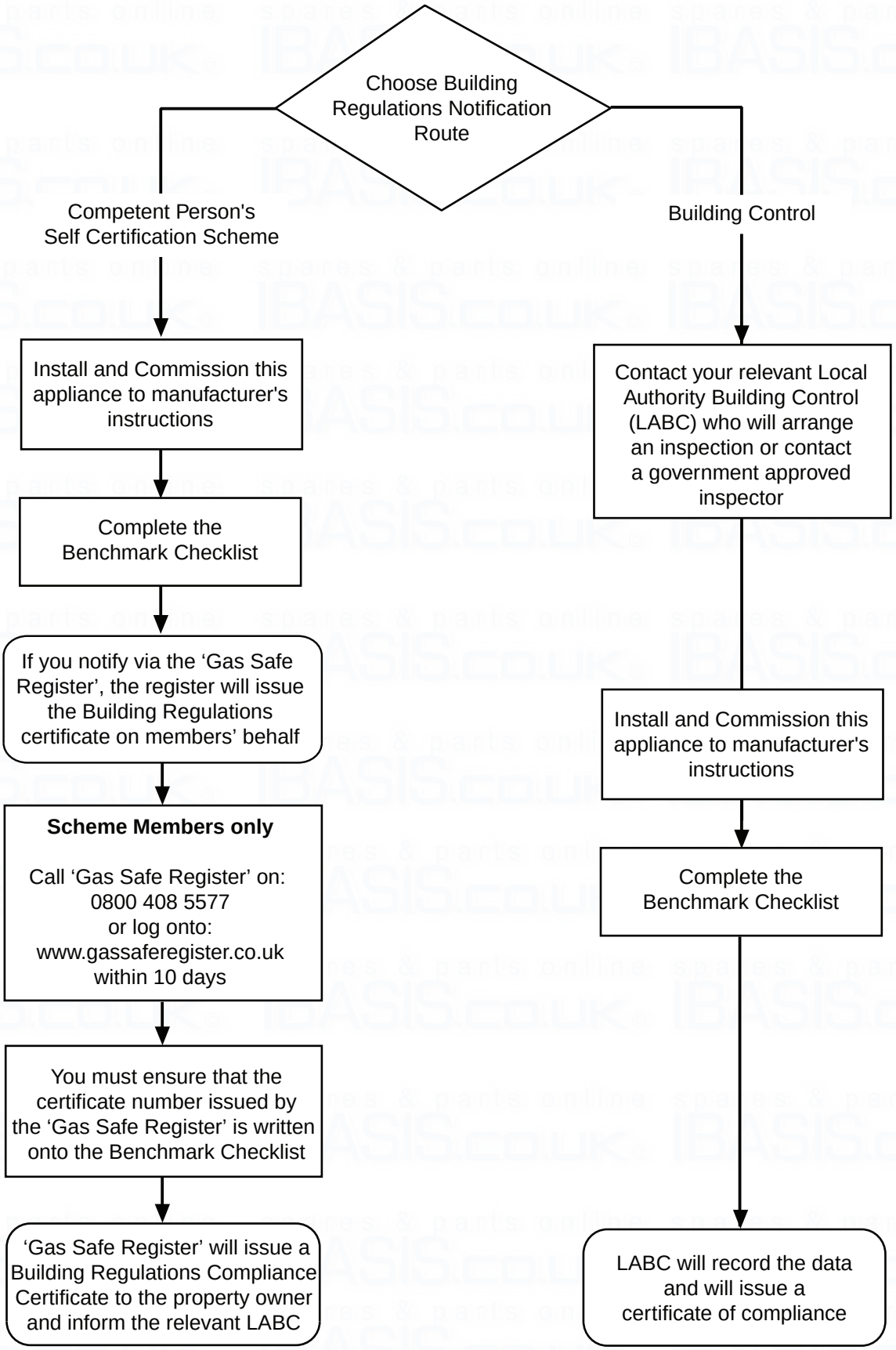
Choose Building Regulations Notification Route
Competent Person's Self Certification Scheme
Building Control
Install and Commission this appliance to manufacturer's instructions
Complete the Benchmark Checklist
If you notify via the 'Gas Safe Register', the register will issue the Building Regulations certificate on members' behalf
Scheme Members only
Call 'Gas Safe Register' on: 0800 408 5577 or log onto: www.gassaferegister.co.uk within 10 days
You must ensure that the certificate number issued by the 'Gas Safe Register' is written onto the Benchmark Checklist
'Gas Safe Register' will issue a Building Regulations Compliance Certificate to the property owner and inform the relevant LABC
Contact your relevant Local Authority Building Control (LABC) who will arrange an inspection or contact a government approved inspector
Install and Commission this appliance to manufacturer's instructions
Complete the Benchmark Checklist
LABC will record the data and will issue a certificate of compliance

Legislation

IMPORTANT - Installation, Commissioning, Service & Repair

This appliance must be installed in accordance with the manufacturer's instructions and the regulations in force. Read the instructions fully before installing or using the appliance.

In GB, this must be carried out by a competent person as stated in the Gas Safety (Installation & Use) Regulations.

Definition of competence: A person who works for a Gas Safe registered company and holding current certificates in the relevant ACS modules, is deemed competent.

In IE, this must be carried out by a competent person as stated in I.S. 813 "Domestic Gas Installations".

NOTE: The addition of anything that may interfere with the normal operation of the appliance without express written permission from the manufacturer or his agent could invalidate the appliance warranty. In GB this could also infringe the Gas Safety (Installation and Use) Regulations.

Warning - Check the information on the data plate is compatible with local supply conditions.

All Gas Safe registered engineers carry an ID card with their licence number and a photograph. You can check your engineer is registered by telephoning 0800 408 5500 or online at www.gassaferegister.co.uk

The boiler meets the requirements of Statutory Instrument " The Boiler (Efficiency) Regulations 1993 N° 3083" and is deemed to meet the requirements of Directive 92/42/EEC on the energy efficiency requirements for new hot water boilers fired with liquid or gaseous fuels:-

Type test for purpose of Regulation 5 certified by:
Notified Body 0087.

Product/Production certified by:
Notified Body 0086.

For GB/IE only.

This company declares that no substances harmful to health are contained in the appliance or used during appliance manufacture.

The appliance is suitable only for installation in GB and IE and should be installed in accordance with the rules in force, and only used in a suitably ventilated location.

In GB, the installation must be carried out by a Gas Safe Registered Installer. It must be carried out in accordance with the relevant requirements of the:

- Gas Safety (Installation & Use) Regulations.
- The appropriate Building Regulations either The Building Regulations, The Building Regulations (Scotland), Building Regulations (Northern Ireland).
- The Water Fittings Regulations or Water Byelaws in Scotland.
- The Current I.E.E. Wiring Regulations.

Where no specific instructions are given, reference should be made to the relevant British Standard Code of Practice.

In IE, the installation must be carried out by a competent Person and installed in accordance with the current edition of I.S. 813 'Domestic Gas Installations', the current Building Regulations and reference should be made to the current ETCI rules for electrical installation.

All systems must be thoroughly flushed and treated with inhibitor (see section 6.2).

Codes of Practice, most recent version should be used

In GB the following Codes of Practice apply:

Standard	Scope
BS 6891	Gas Installation.
BS 5546	Installation of hot water supplies for domestic purposes.
BS EN 12828	Heating systems in buildings.
BS EN 14336	Installation & commissioning of water based heating systems.
BS 6798	Installation of gas fired hot water boilers.
BS 5440 Part 1	Flues.
BS 5440 Part 2	Ventilation.
BS 7074	Expansion vessels and ancillary equipment for sealed water systems.
BS 7593	Treatment of water in domestic hot water central heating systems.

In IE the following Codes of Practice apply:

Standard	Scope
I.S. 813	Domestic Gas Installations.
The following BS standards give valuable additional information;	
BS 5546	Installation of hot water supplies for domestic purposes.
BS EN 12828	Heating systems in buildings.
BS EN 14336	Installation & commissioning of water based heating systems.
BS 7074	Expansion vessels and ancillary equipment for sealed water systems.
BS 7593	Treatment of water in domestic hot water central heating systems.

General

The following advice should be adhered to, from when first handling the boiler to the final stages of installation, and also during maintenance.

Most injuries as a result of inappropriate handling and lifting are to the back, but all other parts of the body are vulnerable, particularly shoulders, arms and hands. Health & Safety is the responsibility of EVERYONE.

There is no 'safe' limit for one man - each person has different capabilities. The boiler should be handled and lifted by TWO PEOPLE.

Do not handle or lift unless you feel physically able.

Wear appropriate Personal Protection Equipment e.g. protective gloves, safety footwear etc.

Preparation

Co-ordinate movements - know where, and when, you are both going.

Minimise the number of times needed to move the boiler - plan ahead.

Always ensure when handling or lifting the route is clear and unobstructed. If possible avoid steps, wet or slippery surfaces, unlit areas etc. and take special care on ladders/into lofts.

Technique

When handling or lifting always use safe techniques - keep your back straight, bend your knees. Don't twist - move your feet, avoid bending forwards and sideways and keep the load as close to your body as possible.

Where possible transport the boiler using a sack truck or other suitable trolley.

Always grip the boiler firmly, and before lifting feel where the weight is concentrated to establish the centre of gravity, repositioning yourself as necessary. See section 8.3 of these instructions for recommended lift points.

Remember

The circumstances of each installation are different. Always asses the risks associated with handling and lifting according to the individual conditions.

If at any time when installing the boiler you feel that you may have injured yourself STOP !!
DO NOT 'work through' the pain - you may cause further injury.

IF IN ANY DOUBT DO NOT HANDLE OR LIFT THE BOILER - OBTAIN ADVICE OR ASSISTANCE BEFORE PROCEEDING !!

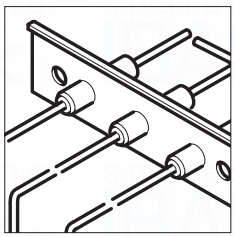

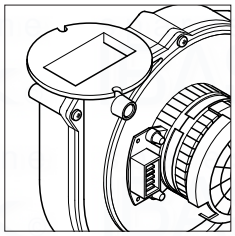

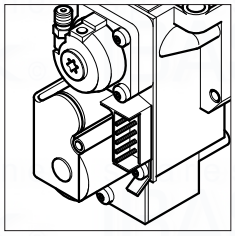

Contents

Section		Page
1.0	Introduction	7
2.0	General Layout	8
3.0	Appliance Operation	9
4.0	Technical Data	10
5.0	Dimensions and Fixings	11
6.0	System Details	12
7.0	Site Requirements	16
8.0	Flue Options	21
9.0	Plume Displacement	26
10.0	Installation	30
11.0	Electrical	36
12.0	Commissioning the Boiler	38
13.0	Fitting the Outer Case	41
14.0	Servicing the Boiler	42
15.0	Changing Components	45
16.0	Short Parts List	51
17.0	Fault Finding	52
	Benchmark Checklist	58

spares & parts online IBASIS.CO.UK

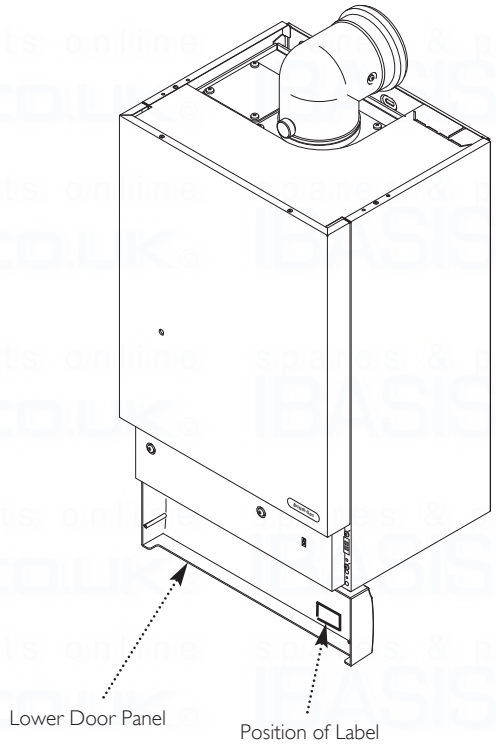

Fig. 1

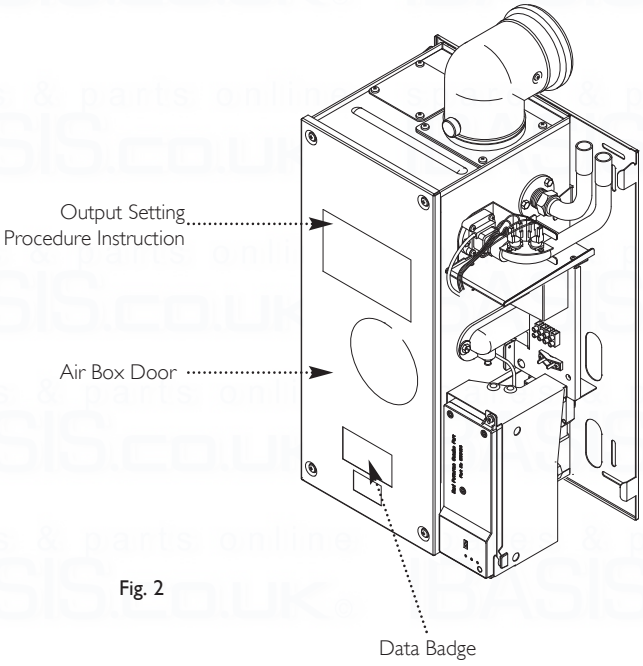

Fig. 2

1.0 Introduction

1.1 Description

1. The British Gas Potterton Precision is a gas fired room sealed fan assisted condensing central heating boiler.

2. The maximum output of the British Gas Potterton Precision is adjustable at the time of commissioning (Section 12.0). There are 5 outputs, set by turning the Output Selector to the appropriate position (see item 17 on the General Layout diagram, Section 2.0, for its location).

3. The boiler automatically adjusts the output up to the selected maximum according to the system load. It is designed for use on Natural Gas (G20) only and is factory set at an output of 19.27kW (condensing).

4. The boiler is suitable for fully pumped open vented central heating and domestic hot water systems and sealed systems.

5. A label giving details of the model, serial number and Gas Council number is situated on the rear of the lower door panel (Fig. 1).

6. The boiler data badge is positioned on the air box door (Fig. 2).

7. The boiler is intended to be installed in residential / domestic environments on a governed meter supply only.

8. The boiler must be installed with one of the purpose designed flues such as the standard horizontal flue kit, part no 236921.

1.2 Important Information

Man-made mineral fibre

- Some component parts of this appliance (insulation pads, gaskets and rope seals) are manufactured from man-made mineral fibre.
- Prolonged or excessive exposure to this material may result in some irritation to the eyes, skin or respiratory tract.
- It is advisable to wear gloves when handling these items.
- Irritant dust will only be released from the items if they are broken up or subjected to severe abrasion. In these instances a suitable dust mask and goggles should be worn.
- Always thoroughly wash hands after installation, servicing or changing components.
- When disposing of any items manufactured from man-made mineral fibre care must be exercised.
- If any irritation of the eyes or severe irritation of the skin is experienced seek medical attention.

1.3 Contents of Pack

The pack contains:-

- Boiler
- Wall Plate
- Template & 'Quick Fit' Guide
- Literature Pack
- Fittings Pack

2.0 General Layout

2.1 Layout (Figs. 3,4,5 & 6)

1. Wall Plate
2. Flue Elbow
3. Heat Exchanger
4. Burner
5. Air Box
6. Fan Protection Thermostat
7. Fan Assembly
8. Condensate Trap
9. PCB Housing Assembly
10. Gas Tap
11. Gas / Air Ratio Valve
12. Flow Pipe Connection
13. Return Pipe Connection
14. Flow Temperature Safety Thermostat - Black
15. Flow Temperature Thermistor - Red
16. Flow Switch (dry fire protection)
17. Output Selector Switch Cover

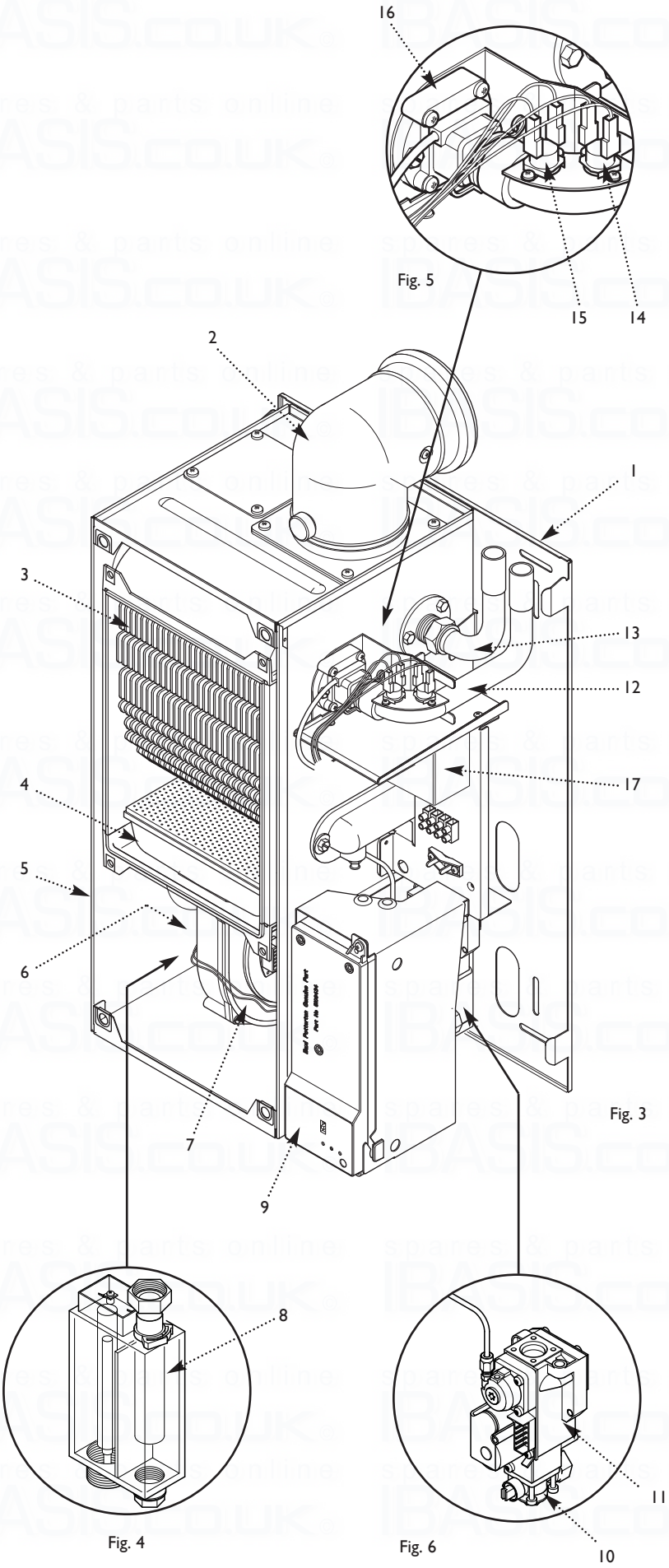

Fig. 5

Fig. 3

Fig. 4

Fig. 6

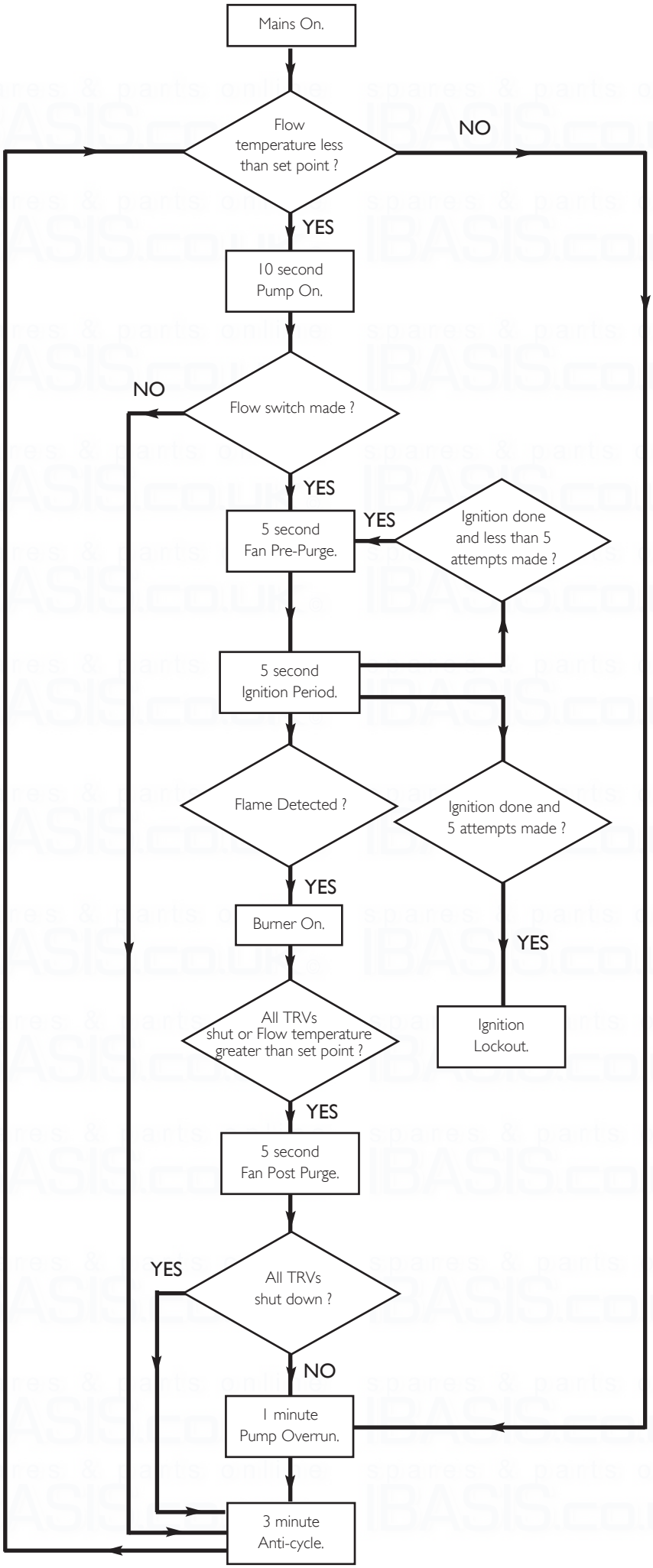

3.0 Appliance Operation

3.1

1. **Switched Live On:** When the switched live switches on if the flow temperature is less than the set point then pump overrun occurs. When the switched live switches on if the flow temperature is greater than the set point then pump overrun occurs.

2. **Pump On:** The pump is on while the fan, spark generator and gas valve are off. After 10 seconds if the flow switch has made then fan pre-purge occurs. After 10 seconds if the flow switch has not made then anti-cycle occurs.

3. **Fan Pre-Purge:** The pump and fan are on while the spark generator and gas valve are off. After 5 seconds ignition occurs.

4. **Ignition:** The pump, fan, spark generator and gas valve are on. If a flame is detected then burner on occurs. If a flame is not detected within 5 seconds and less than 5 ignition attempts have been made then fan purge occurs. If a flame is not detected within 5 seconds and 5 ignition attempts have been made then ignition lockout occurs.

5. **Burner On:** The pump, fan and gas valve are on while the spark generator is off. Flow temperature is controlled by varying the fan speed (and thereby the gas rate) to achieve optimum operation. If the flow temperature is greater than the set point or the TRVs all shut down then fan post purge occurs.

6. **Fan Post Purge:** The pump and fan are on while the spark generator and gas valve are off. After 5 seconds if the TRVs are not shut down then pump overrun occurs. After 5 seconds if the TRVs are shut down then anti-cycle occurs.

7. **Pump Overrun:** The pump is on while the fan, spark generator and gas valve are off. After 1 minute anti-cycle occurs.

8. **Anti-cycle:** The pump, fan, spark generator and gas valve are off. After 3 minutes if the flow temperature is less than the set point then pump on occurs. After 3 minutes if the flow temperature is greater than the set point then pump overrun occurs.

9. **Ignition Lockout:** The pump, fan, spark generator and gas valve are off. The boiler can only be reset by manually using the reset button.

Appliance Type	C_{13}	C_{33}	C_{53}
Appliance Category	CAT I 2H		

Heat Input (Q)(Gross)		Max	Min
Setting 1	kW	13.34	10.2
Setting 2	kW	16.88	10.2
Setting 3	kW	20.18	10.2
Setting 4	kW	24.50	10.2
Setting 5	kW	33.76	10.2

Heat Output (P)
(Non Condensing 70° C Mean Water Temp)

		Max	Min
Setting 1	kW	11.82	9.14
Setting 2	kW	15.24	9.14
Setting 3	kW	17.81	9.14
Setting 4	kW	22.00	9.14
Setting 5	kW	30.18	9.14

Heat Output (P)
(Condensing 40° C Mean Water Temp)

		Max	Min
Setting 1	kW	12.81	10.1
Setting 2	kW	16.49	10.1
Setting 3	kW	19.27	10.1
Setting 4	kW	23.8	10.1
Setting 5	kW	32.61	10.1

NOTE: The boiler is delivered at Setting 3. If a greater or lesser output is required refer to the output setting procedure on the boiler front panel. The electrical supply MUST BE ISOLATED before doing this, and it must only be done by a competent registered person.

SEDBUK Declaration

Setting 1 - The efficiency is 90.5%
Setting 2 - The efficiency is 91.3%
Setting 3 - The efficiency is 90.4%
Setting 4 - The efficiency is 90.9%
Setting 5 - The efficiency is 90.9%

This value is used in the UK Government's Standard Assessment Procedure (SAP) for energy rating of dwellings. The test data from which it has been calculated has been certified by 0087.

Max Gas Rate (2H - G20 - 20mbar)
(After 10 Mins)

Setting	1	2	3	4	5
m^3/hr	1.34	1.64	1.94	2.31	2.95

Injector (Natural Gas)
6.5mm Diameter

Nox Class 5

Horizontal Flue Terminal Dimensions

Diameter		110mm
Projection		150mm

Connections

Gas Supply	-	½in BSPT
Central Heating Flow	-	22mm
Central Heating Return	-	22mm
Condensate Drain	-	1 in BSP

Outercase Dimensions

Overall Height Inc Flue Elbow	-	750mm
Casing Height	-	600mm
Casing Width	-	390mm
Casing Depth	-	280mm

Clearances
(For unventilated compartments see Section 7.2)

Both Sides	5mm Min
Above Casing	200mm Min
Below Casing	50mm Min
Front (For Servicing)	500mm Min
Front (In Operation)	5mm Min

Weights	kg
Packaged Boiler Carton	36.2
Packaged Flue Kit	3.6
Installation Lift Weight	26.0

CO/CO^2 Ratio Up to a maximum of 0.004

CO^2 Level 9% ± 1%

NOTE: All data in this section are nominal values and subject to normal production tolerances

Electrical Supply 230V~ 50Hz
(Appliance must be connected to an earthed supply)

Power Consumption 80W

External Fuse Rating 3A

Internal Fuse Rating (BS 4265)
Fuse 3.15 AT (PCB)

Electrical Protection IPX2

Water Content
litres 2.6
pints 4.6

Static Head
max 30 metres (100 ft)
min 1 metre (3.25 ft)

Low Head 0.2m (8 in) min

System Detail
fully pumped open vented & sealed systems

Gas Connection
G½" B.S.P. Thread

Controls
boiler thermostat, safety thermostat, flow switch, electronic flame sensing, temperature protection thermostat & condensate blockage sensor

Inlet Pressure at Gas Valve (Natural Gas)
Min 18.1 mbar
Max 22.5 mbar
(see Section 12.1)

Flow Temperature (adjustable)
55° C to 78° C (± 5° C)

Recommended System Temperature Drop
Condensing 20°C 36°F

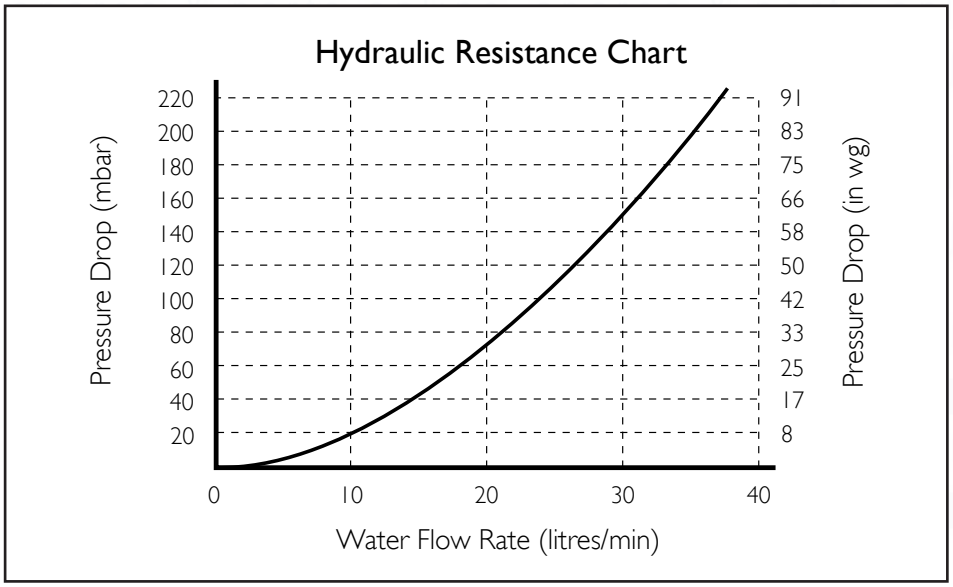

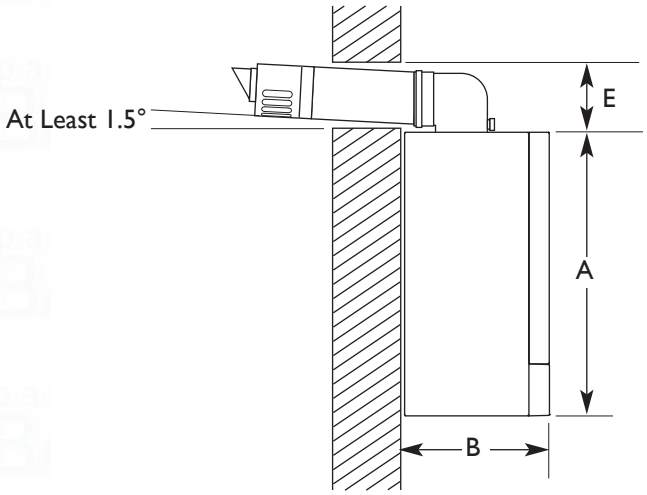

DIMENSIONS	
A	600mm
B	280mm
C	390mm
D	150mm Ø Min.
E	162.5mm
F	96mm

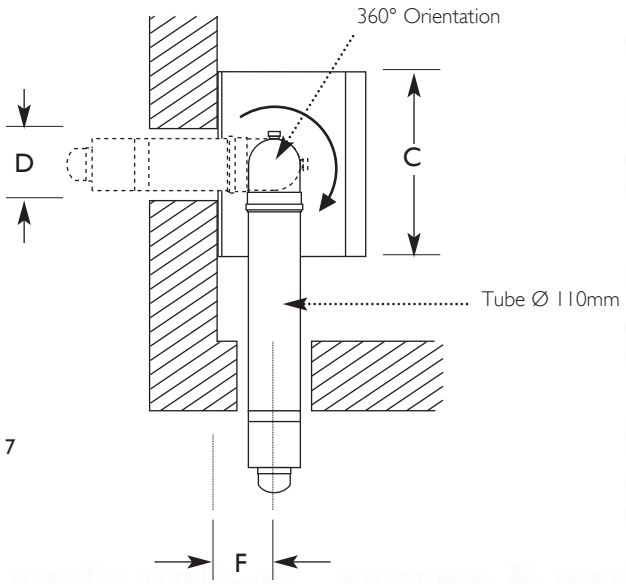

Fig. 7

The 1.5° fall provided by the elbow is to allow condensate to run back to the boiler, for disposal through the condensate discharge pipe.

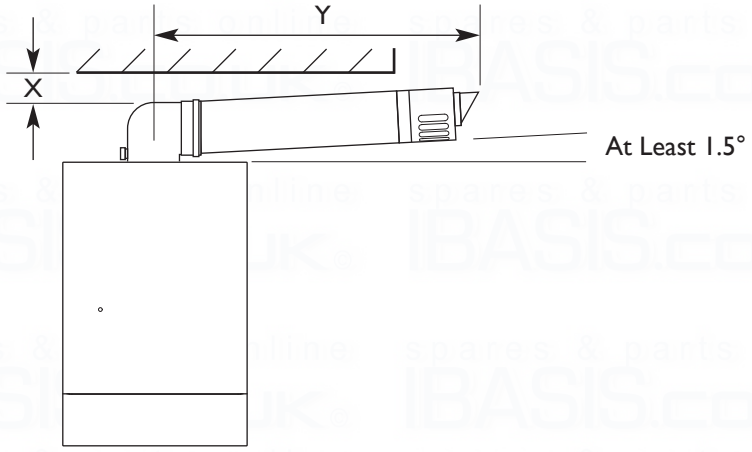

Fig. 8

SIDE FLUE (left and right)

For every 1m of horizontal flue length, the clearance above the top of the flue elbow should be 27.5mm to incorporate the 1.5° fall in the flue from the terminal to the elbow.

Flue length (Y)	Clearance (X)
up to 1m	27.5mm
1m - 2m	55mm
2m - 3m	82.5mm

6.0 System Details

6.1 Water Circulating Systems

1. The appliance is suitable for use with open vent fully pumped systems and sealed systems .

The following conditions should be observed on all systems:

- The static head must not exceed 30m (100ft) of water.
- The boiler must not be used with a direct cylinder.
- Drain cocks should be fitted to all system low points.
- All gas and water pipes and electrical wiring must be installed in a way which would not restrict the servicing of the boiler.
- Position isolating valves as close to circulating pump as possible.
- It is recommended that the return pipe is fitted with an automatic air vent as close to the boiler as is practical.

6.2 Treatment of Water Circulating Systems

- All recirculatory water systems will be subject to corrosion unless an appropriate water treatment is applied. This means that the efficiency of the system will deteriorate as corrosion sludge accumulates within the system, risking damage to pump and valves, boiler noise and circulation problems.

- When fitting new systems flux will be evident within the system, which can lead to damage of system components.

- All systems must be thoroughly drained and flushed out using, for example, Sentinel X300 or X400 or Fernox F3. They should be used following the flushing agent manufacturer's instructions.

- System additives - corrosion inhibitors and flushing agents/descalers should comply to BS7593 requirements, e.g. Sentinel X100 and Fernox MB-1 which should be used following the inhibitor manufacturer's instructions.

- Full instructions are supplied with the products, for further information contact Sentinel (0800 389 4670) or Fernox (0870 870 0362)

Failure to flush and add inhibitor to the system will invalidate the appliance warranty.

- It is important to check the inhibitor concentration after installation, system modification and at every service in accordance with the manufacturer's instructions. (Test kits are available from inhibitor stockists.)

- For information or advice regarding any of the above contact Technical Enquiries.

spares & parts online IBASIS.CO.UK

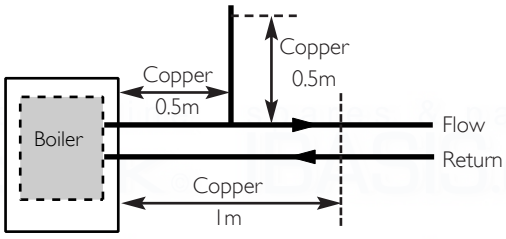

Fig. 9

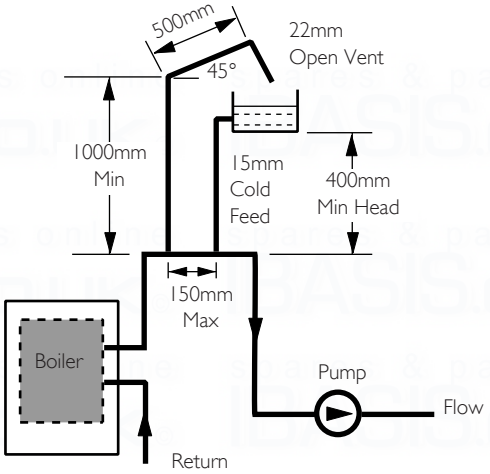

Fig. 10 Typical Low Head Installation

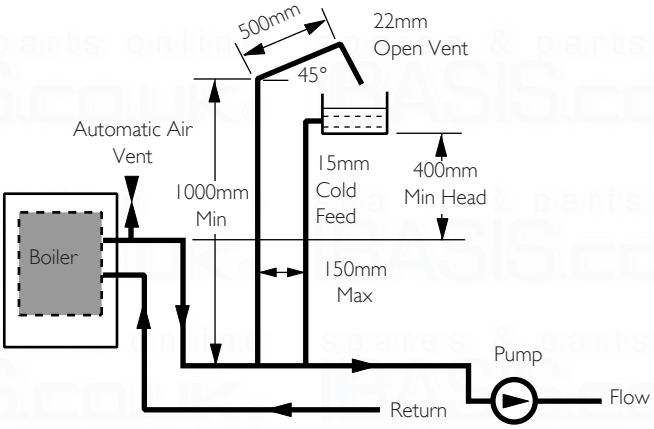

Fig. 11 If Conditions Require, This System Possible

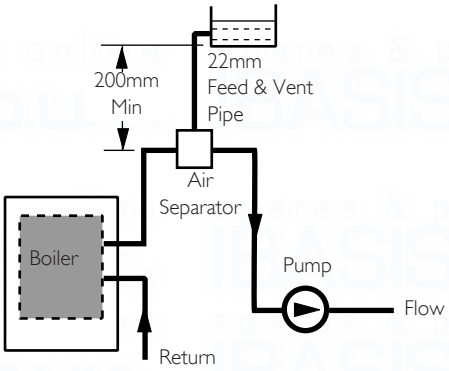

Fig. 12 Alternative Low Head Installation

6.0 System Details

6.3 Pipework

1. The sizes of flow and return pipes from the boiler should be determined by normal methods, according to the requirements of the system. The connections on the boiler are 22mm.

2. A 20 °C (36°F) drop in temperature across the system is recommended for condensing boilers. Existing radiators may be oversized and so allow this, but where radiator sizing is marginal it may be advisable to retain a system temperature drop of 11°C (20°F).

NOTE: When Output Setting 5 is selected 28mm pipe should be used to connect to the boiler flow and return.

3. In systems using non-metallic pipework it is necessary to use copper pipe for the boiler Flow and Return. The copper must extend at least 1 metre from the boiler and include any branches (Fig. 9).

6.4 Low Head Installation

1. Using a close couple arrangement the minimum head is as shown in the diagrams (Figs. 10 & 11) subject to the following conditions:

a) The pump being adjusted to give a 20°C drop across the boiler.
b) The pump must be fitted on the flow.
c) The pump must be fitted in accordance with the pump manufacturer's instructions.
d) The open vent pipe must be taken up from a tee in a horizontal section of the flow pipe.

An alternative Low Head Installation (Fig. 12)

2. For heads below 400mm then a combined vent and feed pipe may be connected. This must be a minimum of 22mm diameter. It is recommended that an air separator is fitted when using a combined feed and vent pipe.

6.5 Pump

1. Providing that the cold feed and open vent pipe are positioned correctly (e.g. the system is not prone to pumping over, air entrainment etc.) the pump may be fitted on the primary return pipe.

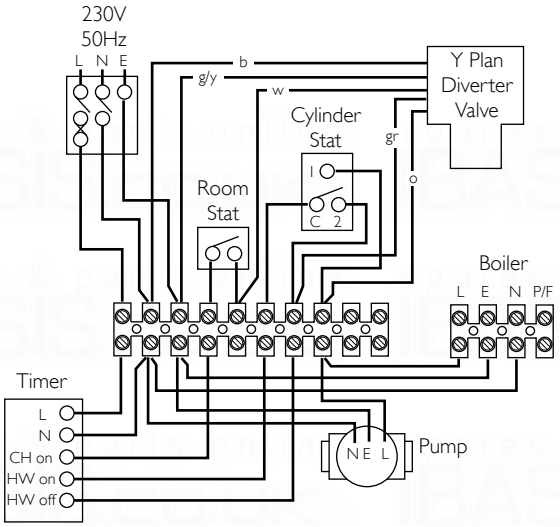

Key to colours

b	-	Blue
br	-	Brown
w	-	White
o	-	Orange
gr	-	Grey
g/y	-	Green/Yellow

i) Y Plan, Room Thermostat System, CH Interlocked By Room Thermostat
At least the Radiator(s) near the Room Thermostat not TRV'd
Pump run from Switched Live
By-pass permitted but not required for Part L1 compliance

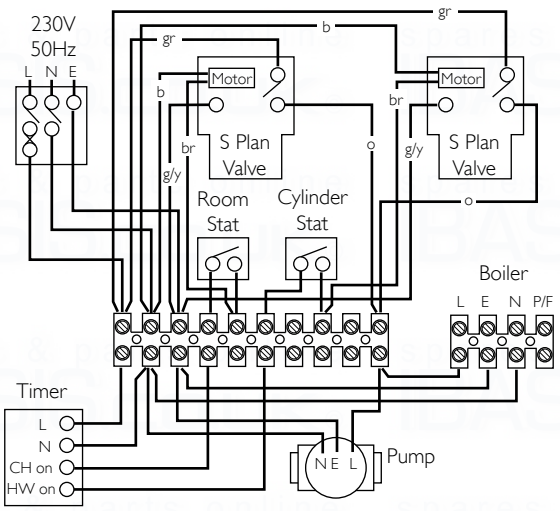

ii) S Plan, Room Thermostat System, CH Interlocked By Room Thermostat
At least the Radiator(s) near the Room Thermostat not TRV'd
Pump run from Switched Live
By-pass permitted but not required for Part L1 compliance

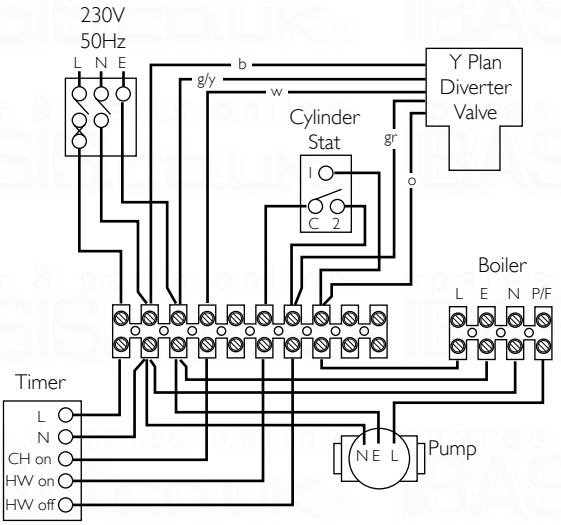

iii) Y Plan, Fully TRV'd System, CH Interlocked By Boiler Flow Switch
Room Thermostat should not be fitted
Pump must be run from Boiler P/F connection for Part L1 compliance
By-pass not permitted (must be valved off) for Part L1 compliance

6.0 System Details

6.6 System Controls

This boiler does not require a bypass.
This boiler does not require a permanent live.
The pump only needs wiring directly to the boiler for fully TRV'd systems.

IMPORTANT: When output is at setting 5 (see Section 12.1) the pump cannot be wired directly to the boiler. Only use wiring diagrams i & ii opposite when set to 5.

1. To comply with Part L1 of the Building Regulations the heating system into which the boiler is installed should include the following:

a) zone controls
b) timing controls
c) boiler control interlocks

2. Such a system needs to be fully pumped and must provide independent temperature and time control to both the heating and hot water circuits and have a boiler interlock.

3. The boiler should be controlled so that it operates on demand only. Where it is proposed to effect control by thermostatic radiator valves, a room thermostat (or other device such as a flow switch - a flow switch is integral to this boiler) should also be provided to switch off the boiler when there is no demand for heating or hot water.

4. The interlock for the CH circuit can be provided by either a Room Thermostat or a fully TRV'd system with the pump wired back to the boiler without a bypass. Connection diagrams for both options for Y and S plan systems are shown.

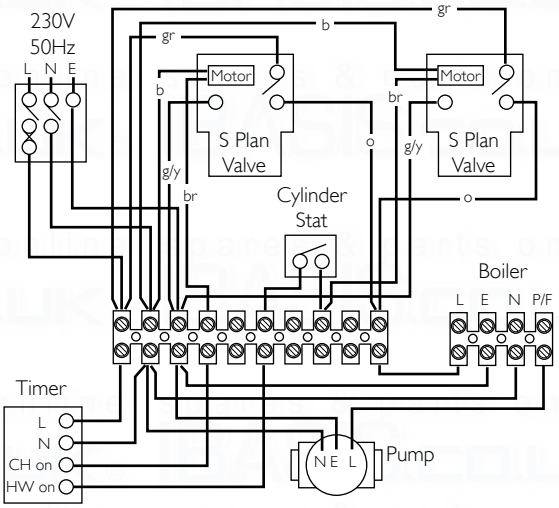

iv) S Plan, Fully TRV'd System, CH Interlocked By Boiler Flow Switch
Room Thermostat should not be fitted
Pump must be run from Boiler P/F connection for Part L1 compliance
By-pass not permitted (must be valved off) for Part L1 compliance

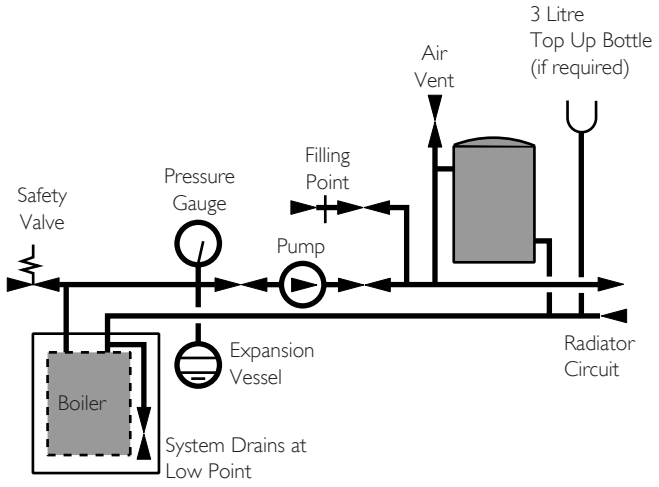

Fig. 13

Max Boiler Flow
Temp = 82° C

Method of determining minimum valve of expansion vessel volume for sealed systems using Potterton Boilers

Vessel Charge Pressure (Bar)	Initial System Pressure (Bar)	Multiply Total Water Content Of System By (Litres)
0.5	0.5	0.067
	1.0	0.112
	1.5	0.207
	2.0	0.441
1.0	1.0	0.087
	1.5	0.152
	2.0	0.330
1.5	1.5	0.125
	2.0	0.265

Table. 1

Example :- System Volume = 75 litres
Vessel Charge Pressure = 1.0 bar
Initial System Pressure = 1.5 bar
Then :- 75 x 0.152 = 11.4 litres
Expansion Vessel Volume

NOTE
Where a vessel of the calculated size is not obtainable then the next available larger size should be used.

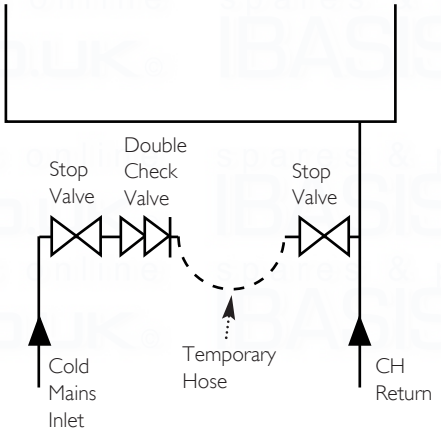

Fig. 14

6.0 System Details

6.7 Sealed Systems (Fig. 13)

1. **SAFETY VALVE** - A safety valve complying with the requirements of BS 6750 Part 1 must be fitted close to the boiler on the flow pipe by means of a horizontal or vertically upward connection with no intervening valve or restrictions and should be positioned to facilitate testing. The valve should be pre-set and non-adjustable to operate at a pressure of 3 bar (45 lbf/in^2). It must be arranged to discharge any water or steam through a pipe to a safe outlet position.

2. **PRESSURE GAUGE** - A pressure gauge of minimum range 0-4 bar (0-60 lbf/in^2) with a fill pressure indicator must be fitted to the system, preferably at the same point as the expansion vessel in an easily visible position.

3. **EXPANSION VESSEL** - An expansion vessel complying with the requirements of BS 4814 must be fitted to the system by means of a connection close to the inlet side of the circulating pump in accordance with the manufacturers instructions, the connecting pipe being unrestricted and not less than 15mm (½ in) nominal size. The volume of the vessel should be suitable for the system water content and the nitrogen or air charge pressure should not be less than the system static head (See Table. 1).

Further details of sealed system design can be obtained from BS 5449 and the British Gas publication entitled 'Specifications for Domestic Wet Central Heating Systems'.

4. **FILLING POINT** - A filling point connection on the central heating return pipework must be provided to facilitate initial filling and pressurising and also any subsequent water loss replacement / refilling. The sealed primary circuits may be filled or replenished by means of a temporary connection between the primary circuit and a supply pipe provided a 'Listed' double check valve or some other no less effective backflow prevention device is permanently connected at the inlet to the circuit and the temporary connection is removed after use. The filling method adopted must be in accordance with all relevant water supply regulations and use approved equipment.
Your attention is drawn to, for GB: Guidance G24.2 and recommendation R24.2 of the Water Regulations Guide. for IE: the current edition of I.S. 813 "Domestic Gas Installations".

5. **MAKE UP SYSTEM** - A method of replacing water lost from the system should be provided either by means of a make up vessel of not more than 3 litres (5 pints) capacity, mounted above the highest point of the system, or by re-pressurisation of the system.

6. **VENTING** - A method of venting the system during filling and commissioning must be provided by fitting automatic air vents or by venting manually.

7. **HOT WATER STORAGE** - The hot water storage vessel must be of the indirect coil type. All components used in the system must be suitable for operation at 110°C (230°F) and at the pressure allowed by the safety valve.

7.0 Site Requirements

7.1 Location

NOTE: Due to the high efficiency of the boiler a plume of water vapour will be discharged from the flue. This should be taken into account when siting the flue terminal.

1. The boiler may be fitted to any suitable wall with the flue passing through an outside wall or roof and discharging to atmosphere in a position permitting satisfactory removal of combustion products and providing an adequate air supply. The boiler should be fitted within the building unless otherwise protected by a suitable enclosure i.e. garage or outhouse. (The boiler may be fitted inside a cupboard - see Section 7.2).

2. If the boiler is sited in an unheated enclosure then it is recommended to incorporate an appropriate device for frost protection in the system controls.

3. If the boiler is fitted in a room containing a bath or shower it **MUST NOT BE** fitted in zone 0, 1 or 2, **ONLY** within the shaded area (Figs. A & B shows zone dimensions for a bathtub. For other examples refer to the Current I.E.E. Wiring Regulations) reference must be made to the relevant requirements.
In GB this is the current I.E.E. Wiring Regulations and Building Regulations.
In IE reference should be made to the current edition of I.S. 813 "Domestic Gas Installations" and the current ETCI rules.

4. If the boiler is to be fitted into a building of timber frame construction then reference must be made to the current edition of Institute of Gas Engineers Publication IGE/UP/7 (Gas Installations in Timber Framed Housing).

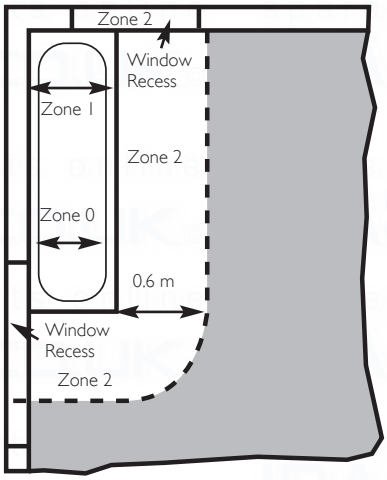

Fig. A In GB Only

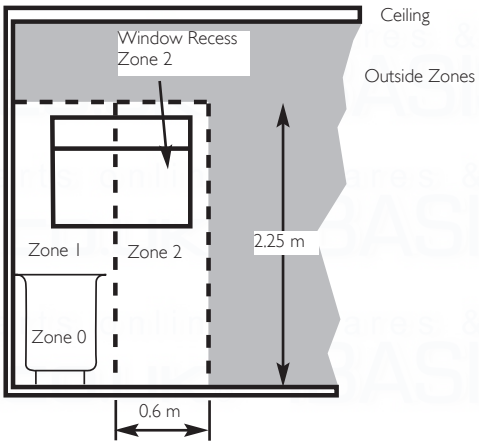

Fig. B In GB Only

7.2 Ventilation of Compartments

1. Where the boiler is installed in a cupboard or compartment, no air vents are required for cooling purposes providing that the minimum dimensions below are maintained.

Sides	15mm
Top	200mm
Bottom	50mm
Front	30mm

2. If the boiler is installed in a smaller cupboard or compartment it must be ventilated according to BS 5440 Part 2 and the minimum clearances given in section 4.0 "Technical Data" maintained.

3. Any compartment should be large enough to house the boiler only.

NOTE: The ventilation label on the front of the outer case MUST NOT BE REMOVED when the appliance is installed in a compartment or cupboard.

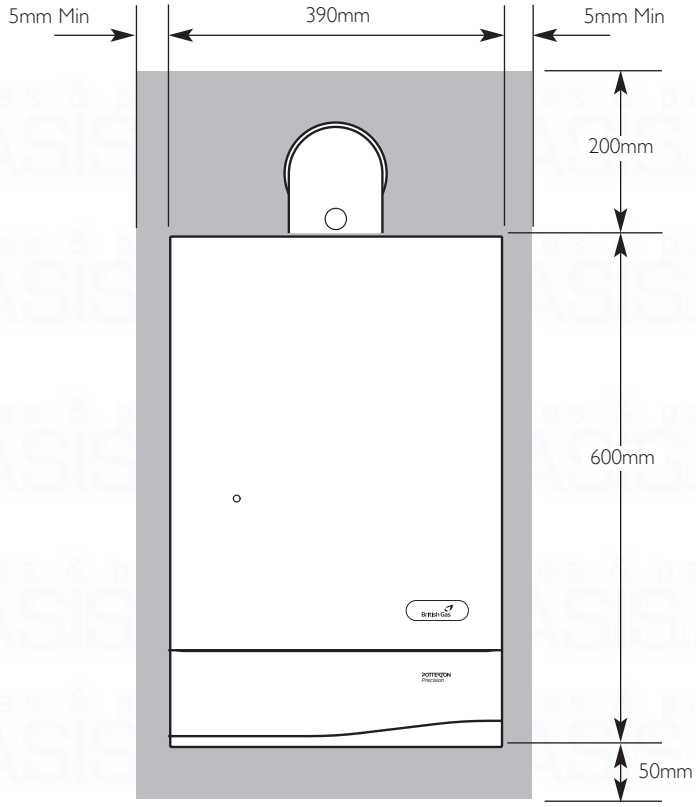

Fig. 15

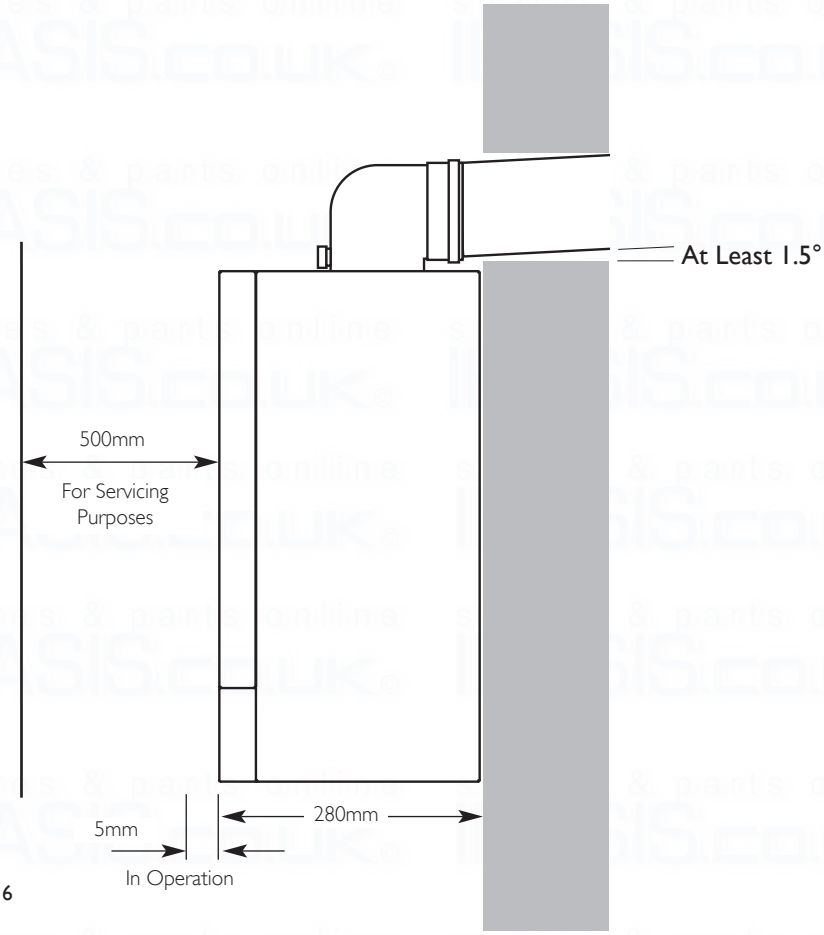

Fig. 16

7.0 Site Requirements

7.3 Clearances (Figs. 15 &16)

1. A flat vertical area is required for the installation of the boiler.

2. These dimensions include the necessary clearances around the boiler for case removal, spanner access and air movement. Additional clearances may be required for the passage of pipes around local obstructions such as joists running parallel to the front face of the boiler.

3. For unventilated compartments see Section 7.2.

7.4 Gas Supply

1. The gas installation should be sized and installed in accordance with the relevant standard to match the output setting of the boiler. In GB this is BS 6891. In IE this is the current edition of I.S. 813 "Domestic Gas Installations".

2. The connection to the appliance is a ½in BSPF.

3. Ensure that the pipework from the meter to the appliance is of adequate size to ensure correct operation. **Do not use pipes of a smaller diameter than the boiler gas connection.**

7.5 Electrical Supply

1. External wiring must be correctly earthed, polarised and in accordance with relevant regulations/rules. In GB this is the current I.E.E. Wiring Regulations. In IE reference should be made to the current edition of ETCI rules.

2. The mains supply is 230V ~ 50Hz fused at 3A.

NOTE: "The method of connection to the electricity supply must facilitate complete electrical isolation of the appliance".

Note! There is no method of isolating the boiler, at the user interface.

Connection may be via a fused double-pole isolator with a contact separation of at least 3mm in all poles and servicing the boiler and system controls only.

WARNING: The PCB Control and Fan Assembly are 325 Vdc. Isolate at supply before access.

spares & parts online IBASIS.COUK

Examples are shown of the following methods of termination:-
i) to an internal soil & vent pipe
ii) via an internal discharge branch (e.g. sink waste) downstream of the trap
iii) to a drain or gully
iv) to a purpose made soakaway
v) pumped into an internal discharge branch (e.g. sink waste) downstream of the trap
vi) pumped into an external soil & vent pipe
vii) to a drain or gully with extended external run & trace heating

It is strongly recommended to discharge internally into the household drainage system. If connecting to a rain water drain, that drain MUST discharge into a foul drain.

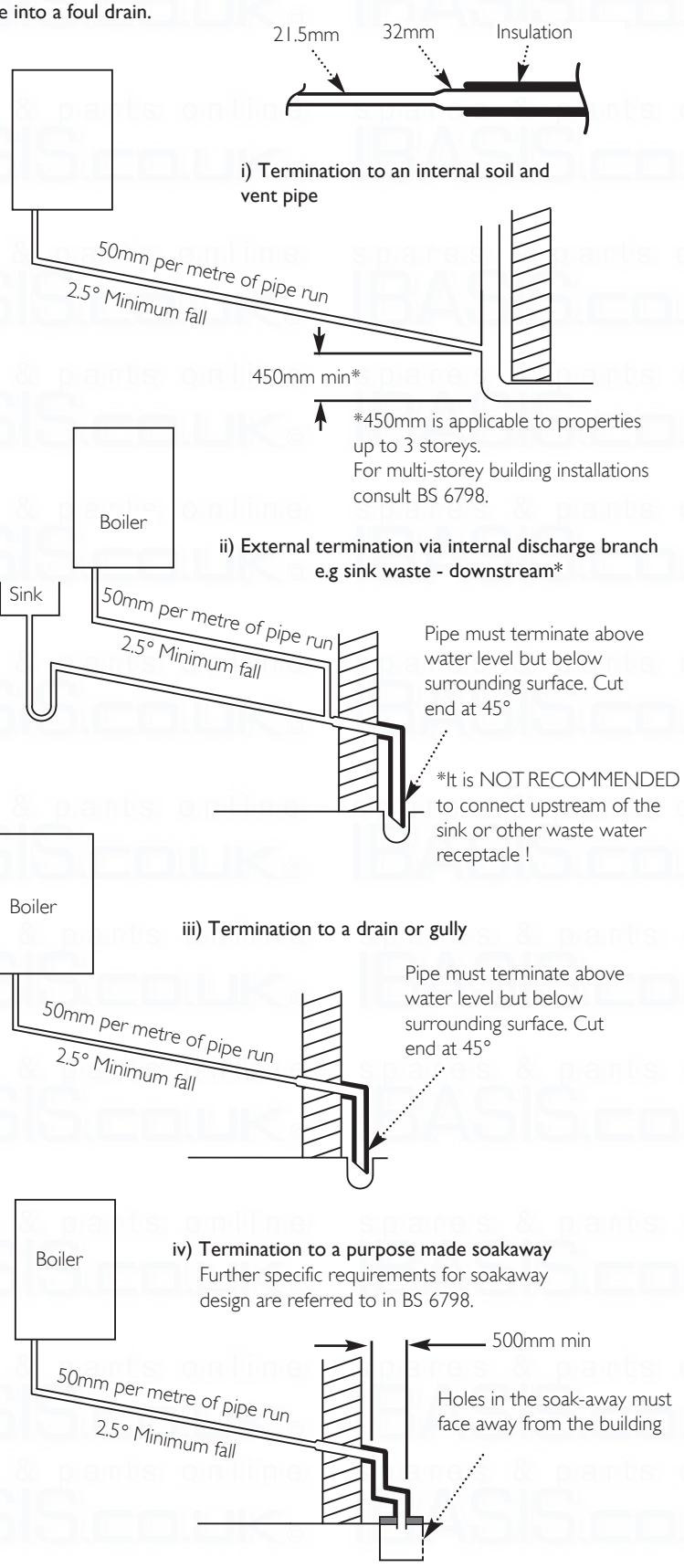

7.0 Site Requirements

7.6 Condensate Drain

FAILURE TO INSTALL THE CONDENSATE DISCHARGE PIPEWORK CORRECTLY WILL AFFECT THE RELIABLE OPERATION OF THE BOILER.

CAREFUL CONSIDERATION MUST BE GIVEN TO THE POSSIBILITY OF THE PIPEWORK BEING SUBJECT TO FREEZING CONDITIONS AND APPROPRIATE MEASURES TAKEN TO PREVENT BLOCKAGE. CORRECT INSTALLATION IN ACCORDANCE WITH THIS SECTION WILL CONSIDERABLY MINIMISE THE LIKELIHOOD OF BLOCKAGE AND SUBSEQUENT BOILER LOCK-OUT.

A CONDENSATE DISCHARGE PUMP AND PIPE 'TRACE HEATING' ARE AVAILABLE AS ACCESSORIES - see paragraphs 7.7.12 to 7.715 for further details.

The condensate discharge pipe MUST NOT RISE at any point along its length. There MUST be a fall of AT LEAST 2.5° (50mm per metre) along the entire run EXCEPT when employing a suitable condensate pump in basement and cellar or similar applications.

The boiler condensate trap incorporates a seal of 75mm, therefore it is unnecessary to install an air break and trap in the discharge pipework.

1. The condensate outlet will accept 21.5mm (3/4in) plastic overflow pipe. **It is strongly recommended that this discharges internally into the household drainage system.** Where this is not possible, discharge into an outside drain is permissible providing every possible precaution is taken to prevent freezing.

2. Ensure the discharge of condensate complies with any national or local regulations in force. **BS 6798 & Part H1 of the Building Regulations give further detailed guidance.**

3. The discharge pipe should be run in a proprietary drain pipe material e.g. PVC, PVC-U, ABS, PVC-C or PP.

4. Metal pipework is NOT suitable for use in condensate discharge systems.

5. The pipe should be a minimum of 21.5mm diameter and must be supported using suitably spaced clips of the correct design to prevent sagging.

6. **It is advisable that the full length of condensate pipe is run internally and preferably be less than 3 metres.**

7. **Internal runs greater than 3 metres or runs in cold areas should use 32mm waste pipe.**

8. **External runs MUST be a MINIMUM of 32mm and fully insulated with material suitable for external use.**

9. If the boiler is fitted in an unheated location the entire condensate discharge pipe should be treated as an external run and sized and insulated accordingly.

10. In all cases discharge pipe must be installed to aid disposal of the condensate. To reduce the risk of condensate being trapped, as few bends and fittings as possible should be used and any burrs on cut pipe removed.

11. When discharging condensate into a soil stack or waste pipe the effects of existing plumbing must be considered. If soil pipes or waste pipes are subjected to internal pressure fluctuations when WC's are flushed or sinks emptied then back-pressure may force water out of the boiler trap and cause appliance lockout.

v) pumped into an internal discharge branch (e.g. sink waste) downstream of the trap

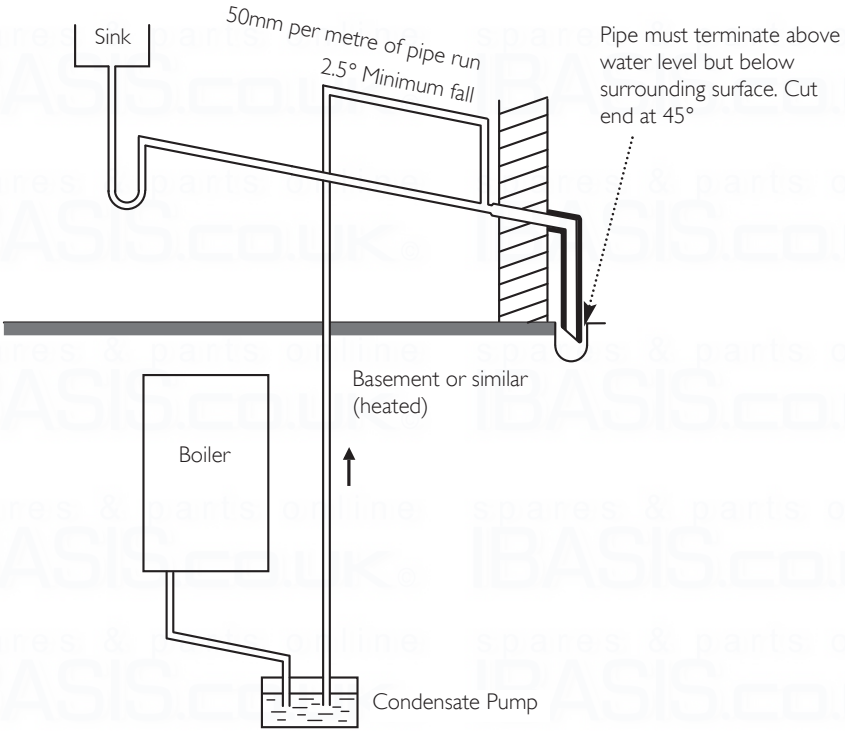

vi) pumped into an external soil & vent pipe

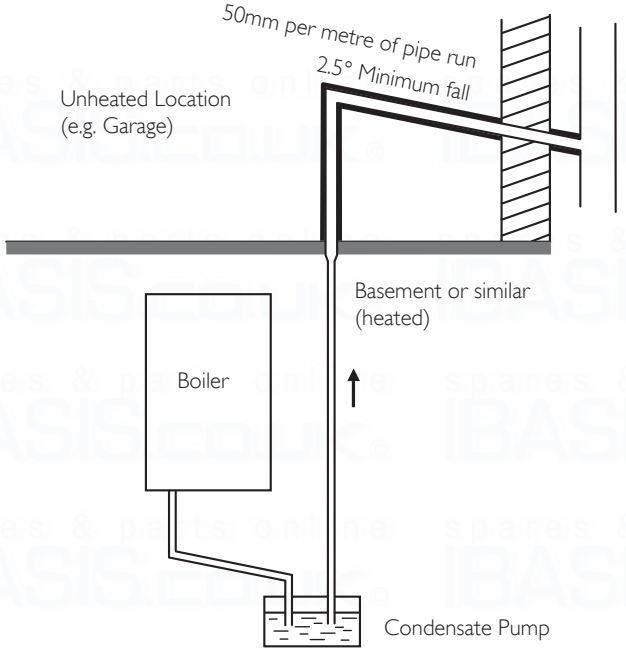

7.0 Site Requirements

7.6 Condensate Drain (cont.)

12. A boiler discharge pump is available, 'MULTIFIT' part no. 720648301. This pump will dispose of both condensate & high temperature water from the relief valve. It has a maximum head of 5 metres. Follow the instructions supplied with the pump.

13. Condensate Drain Pipe 'Trace Heating' Elements are available in various lengths. 'MULTIFIT' part nos.:-

1 metre 720644401
2 metre 720664101
3 metre 720664201
5 metre 720664401*

*Where the drain is between 3 & 5 metres a 5 metre kit can be used and "doubled back" upon itself.

14. It is possible to fit the element externally on the condensate drain or internally as detailed in the instructions provided.

15. The fitting of a 'Trace Heating' Element is NOT a substitute for correct installation of the condensate drain. ALL requirements in this section must still be adhered to.

vii) to a drain or gully with extended external run & trace heating

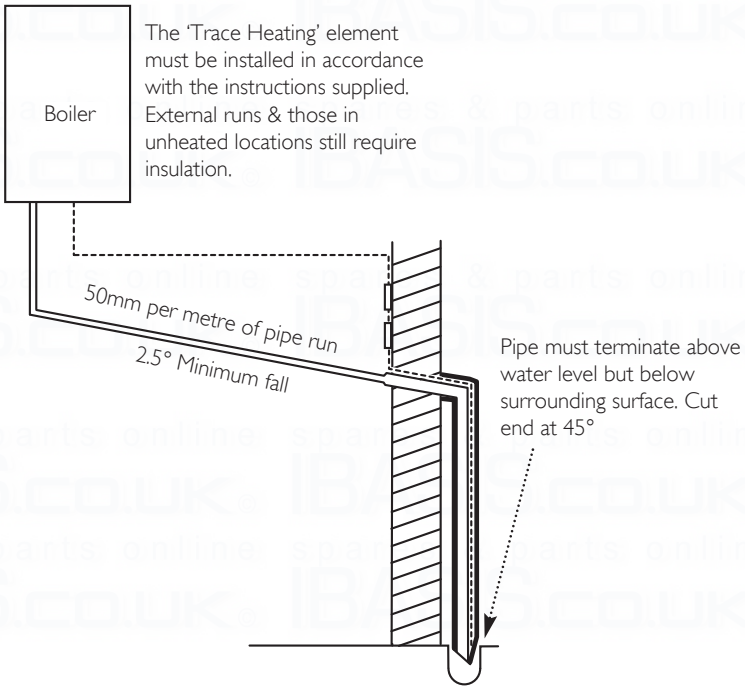

Terminal Position with Minimum Distance (Fig. 17)		mm
A[a]	Directly below an opening, air brick, opening windows, etc.	300
B[a]	Above an opening, air brick, opening window etc.	300
C[a]	Horizontally to an opening, air brick, opening window etc.	300
D[b]	Below gutters, soil pipes or drain pipes.	25 (75)
E[b]	Below eaves.	25 (200)
F[b]	Below balconies or car port roof.	25 (200)
G[b]	From a vertical drain pipe or soil pipe.	25 (150)
H[b]	From an internal (i) or external (ii) corner.	(i) 25 (300) (ii) 115
I	Above ground, roof or balcony level.	300
J	From a surface or boundary line facing a terminal.	600
K	From a terminal facing a terminal (Horizontal flue).	1200
	From a terminal facing a terminal (Vertical flue).	600
L	From an opening in carport (e.g. door, window) into the dwelling.	1200
M	Vertically from a terminal on the same wall.	1500
N	Horizontally from a terminal on the same wall.	300
R	From adjacent wall to flue (vertical only).	300
S	From an adjacent opening window (vertical only).	1000
T	Adjacent to windows or openings on pitched and flat roofs.	600
U	Below windows or openings on pitched roofs.	2000

Table. 2

[a]In addition, the terminal should be no nearer than 150 mm to an opening in the building fabric formed for the purpose of accommodating a built-in element such as a window frame. See B.S.5440-1.

[b] Only **ONE** 25mm clearance is allowed per installation. If one of the dimensions D, E, F, G or H is 25mm then the remainder **MUST** be as shown in brackets, in accordance with B.S.5440-1.

NOTE: The distance from a fanned draught appliance terminal installed parallel to a boundary may not be less than 300mm in accordance with the diagram below

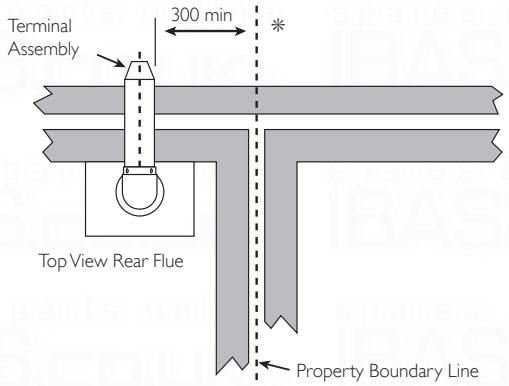

Fig. 16a

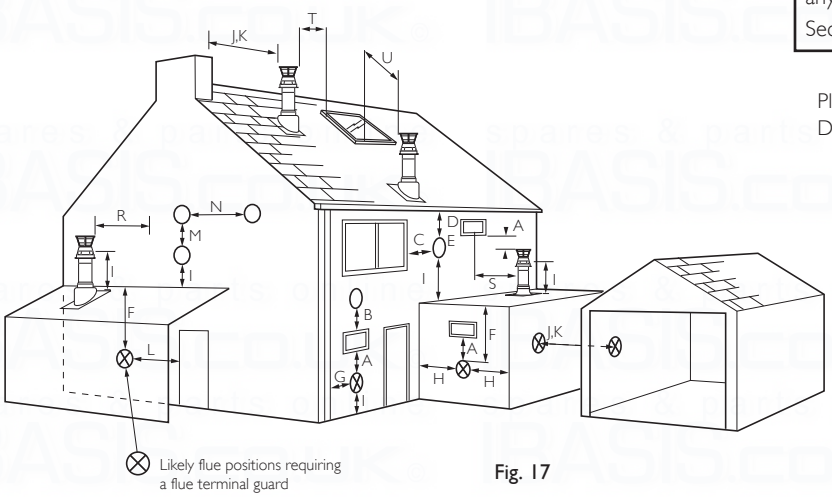

Fig. 17

7.0 Site Requirements

7.7 Flue

NOTE: Due to the high efficiency of the boiler a plume of water vapour will be discharged from the flue. This should be taken into account when siting the flue terminal.

1. The following guidelines indicate the general requirements for siting balanced flue terminals. For GB recommendations are given in BS 5440 Pt.1. For IE recommendations are given in the current edition of I.S. 813 "Domestic Gas Installations".

2. If the terminal discharges onto a pathway or passageway, check that combustion products will not cause a nuisance and that the terminal will not obstruct the passageway.

3. Take into consideration the effect the plume of vapour may have on neighbours when siting the flue.

4. Adjacent surfaces close to the flue terminal may need protection from the effects of condensation. Alternatively a flue deflector kit (part no. 248167) is available.

5. For installation of the flue into an internal corner at the 25mm dimension the flue deflector kit (part no. 248167) must be fitted.

6. * Reduction to the boundary is possible down to 25mm but the Flue Deflector Kit (part no. 248167) must be fitted.

7. If required a suitable terminal guard is available from Potterton for use with the flue deflector.

8. For fitting under low soffits and eaves the Plume Displacement Kit or Flue Deflector Kit is recommended.

9. If a terminal is less than 2 metres above a balcony, above ground or above a flat roof to which people have access, then a suitable terminal guard must be provided.

IMPORTANT:
- Under car ports we recommend the use of the plume displacement kit.
- The terminal position must ensure the safe and nuisance - free dispersal of combustion products.

IMPORTANT: If fitting a Plume Displacement Flue Kit, the air inlet must be a minimum of 150mm from any opening windows or doors (see Section 9.0).

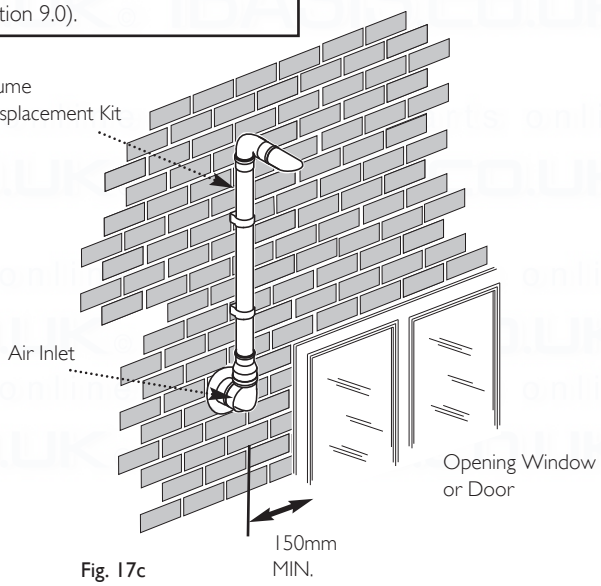

Fig. 17c

8.0 Flue Options

8.1 Horizontal Flue Systems

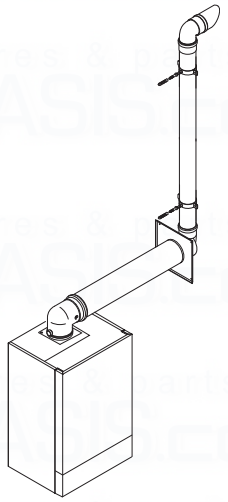

Plume Displacement 70/110 dia Kit 1M Extensions, 45° & 93° bends are also available - see Section 9.0

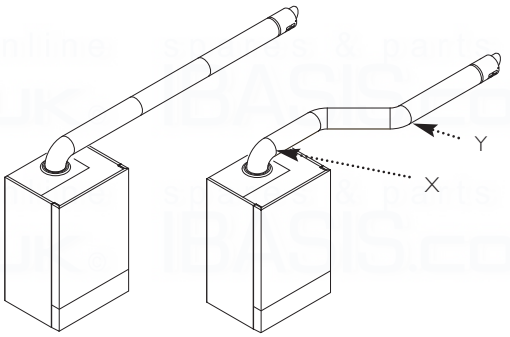

Horizontal
Flue System Examples

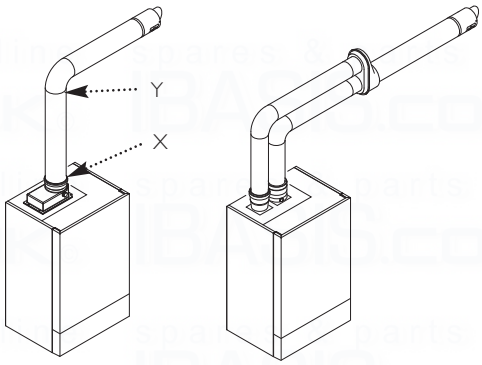

Concentric

The maximum equivalent lengths are 4m (horizontal) or (vertical). Their lengths exclude the standard elbow and flue/terminal assembly (horizontal) and terminal assembly (vertical).

Any additional "in line" bends in the flue system must be taken into consideration. Their equivalent lengths are:

Concentric Pipes:	45° bend	0.5 m
	93° bend	1.0 m

NOTE: Flue length is measured from point X to Y as shown.

IMPORTANT: All flue systems must be securely supported at least once every metre. Suitable pipe supports are available as accessories.

FLUES IN VOIDS
Consideration must be given to flue systems in voids and the provision of adequate access for subsequent periodic visual inspection.

NOTE: Horizontal flue pipes should always be installed with a 1.5° fall from the terminal to allow condensate to run back to the boiler.

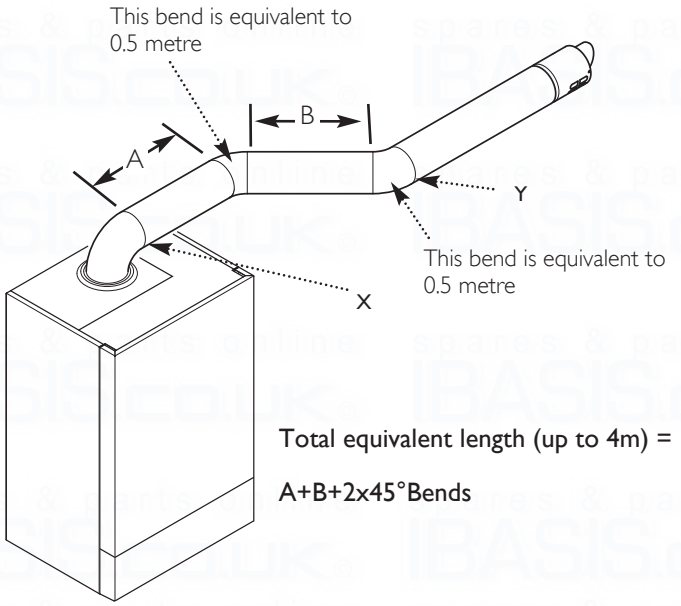

Total equivalent length (up to 4m) =

A+B+2x45°Bends

Vertical Flue System
Examples (Twin Pipe)

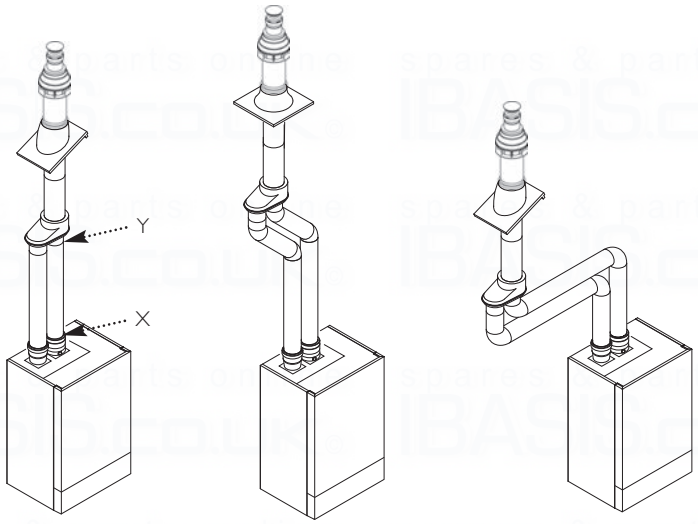

Vertical Flue
System Examples

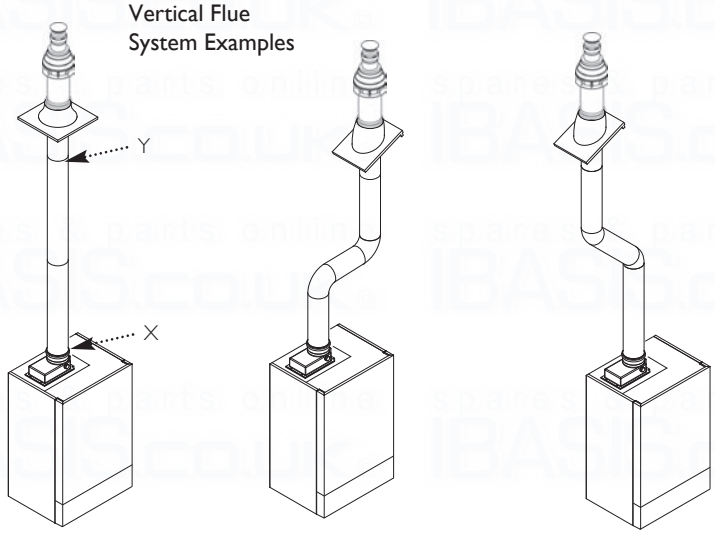

8.0 Flue Options

8.2 Twin & Vertical Flue Systems

Concentric

The maximum equivalent lengths are 4m (vertical). Their lengths exclude the standard elbow and terminal assembly (vertical).

Twin Flue

The total maximum equivalent flue length is 150m.

NOTE: Each 1m of flue duct should be calculated as 2m.

Any additional "in line" bends in the flue system must be taken into consideration. Their equivalent lengths are:

Concentric Pipes:	135° bend	0.5 m
	93° bend	1.0 m
Twin Flue Pipe:	135° bend (air duct)	1.3 m
	135° bend (flue duct)	2.6 m
	90° bend (air duct)	4.8 m
	90° bend (flue duct)	9.6 m

IMPORTANT: All flue systems must be securely supported at least once every metre. Suitable pipe supports are available as accessories.

Total Equivalent Length =
A+B+C+1x90°Bend

All vertical and angled runs must be included, measured from the boiler adaptor (point X) to the joint with the flue terminal (point Y). One 91.5° bend or two 135° bends can be included without reduction of the flue length.

If further elbows are required the flue length must be reduced by the following amounts:-

1 metre for each 91.5° bend
0.5 metre for each 135° bend

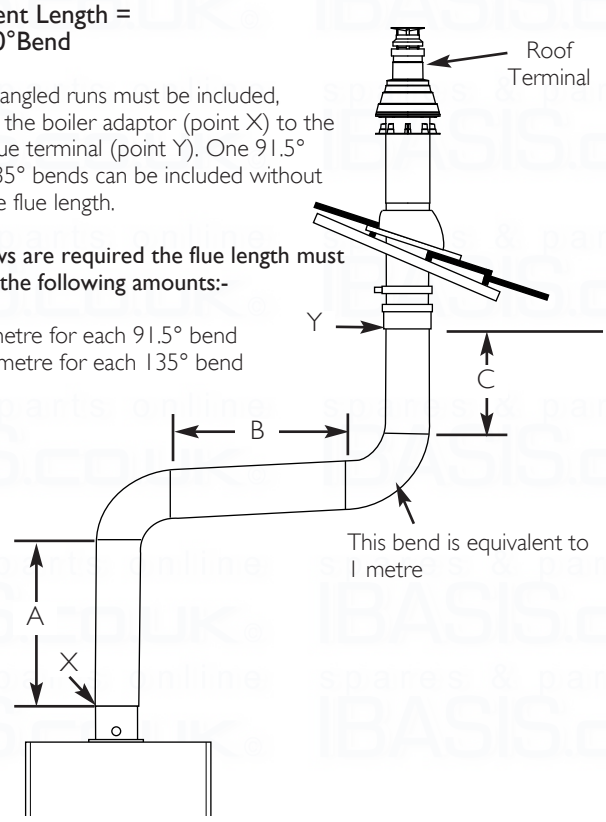

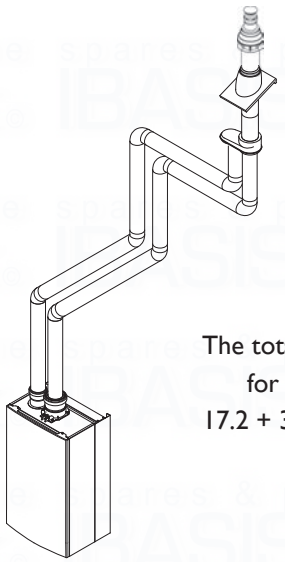

The total equivalent length for this example is 17.2 + 34.4 = 51.6 metres.

AIR DUCT	Equivalent Length Value	N° of fittings/pipes	Sub total
1m extension	1m	5	5.0m
135°bend	1.3m	2	2.6m
91.5°bend	4.8m	2	9.6m
Equivalent Length Air Duct = **17.2m**			

FLUE DUCT	Equivalent Length Value	N° of fittings/pipes	Sub total
1m extension	2m	5	10.0m
135°bend	2.6m	2	5.2m
91.5°bend	9.6m	2	19.2m
Equivalent Length Flue Duct = **34.4m**			

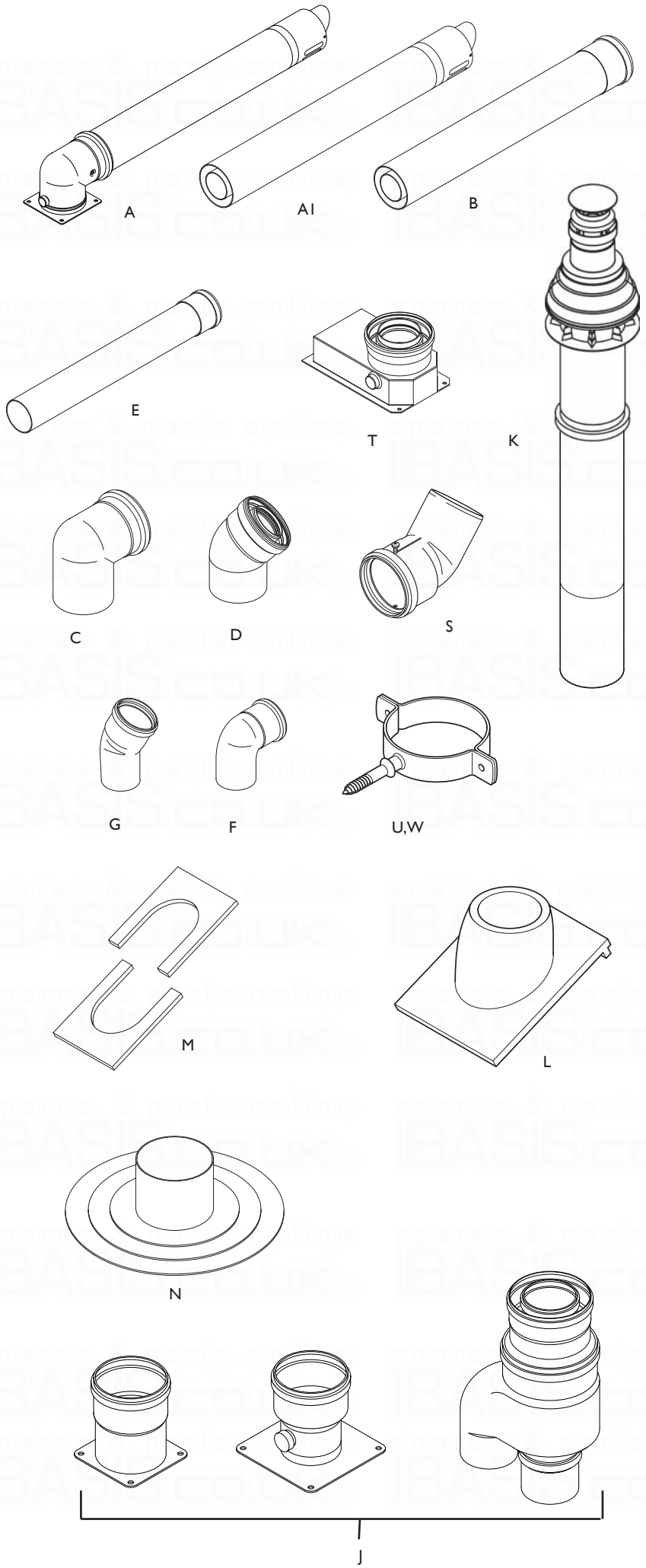

8.0 Flue Options

8.3 Flue Accessories

Key	Accessory	Size	Code No
FLUE GROUP B			
Concentric Flue System 110mm diameter			
A1	Horizontal Flue Terminal	850mm	243013BAX
A	Horizontal Flue Terminal (incl elbow)		236921
B	Flue Extension	1000mm	241695
		500mm	241694
		250mm	241692
C	Flue Bend	93°	241687
D	Flue Bend (pair)	135°	241689
U	Pipe Support	110mm	243014BAX
T	Vertical Flue Boiler Adaptor		5106888
S	Flue Terminal Deflector		248167
FLUE GROUP P			
Twin Flue System 80mm diameter			
E	Flue Extension	1000mm	246137
		500mm	246136
		250mm	246135
F	Flue Bend (pair)	90°	5121560
G	Flue Bend (2 pair)	135°	5121561
J	Vertical Flue Boiler Adaptor Kit		242757
W	Pipe Support (pair)	80mm	5111081
FLUE GROUP B,P			
Vertical Flue Kits			
K	Vertical Flue Terminal		242802
L	Pitched Roof Flashing	25°/50°	243015
M	Roof Cover Plate		243131
N	Flat Roof Flashing		243016BAX

spares & parts online IBASIS.CO.UK

8.0 Flue Options

For Vertical Flues

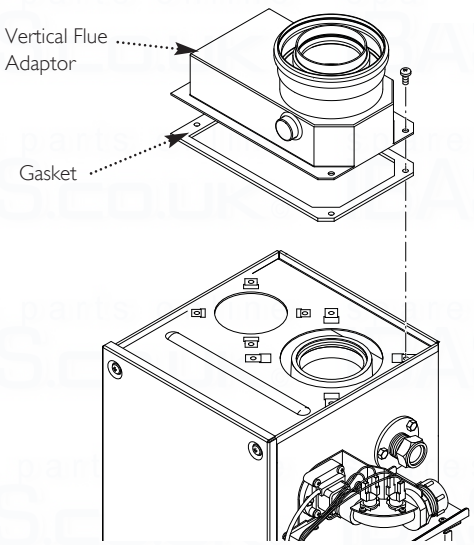

8.4 For Vertical Flue Systems

1. Undo the screws securing the blanking plate to the boiler top panel. Discard the plate.

2. Fix the vertical adaptor and gasket to the top panel with the previously removed screws.

8.5 For Twin Flue Systems

1. Undo the screws securing the blanking plate to the boiler top panel. Discard the plate.

2. Fix both the air and flue adaptors with their gaskets onto the boiler top panel. Secure with screws.

For Twin Flues

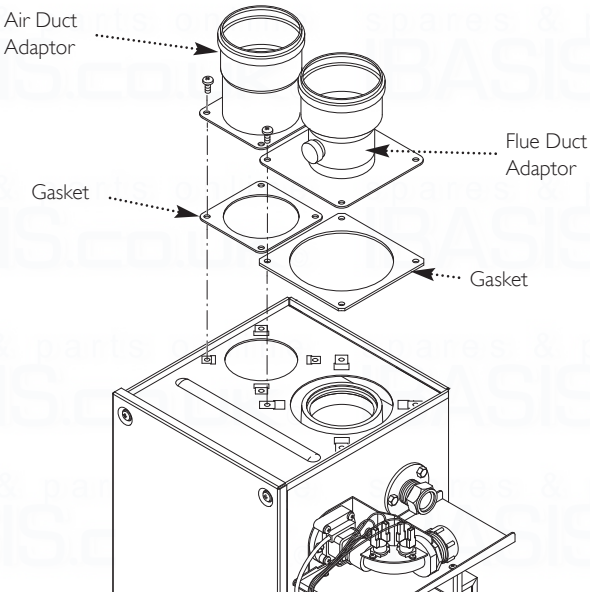

spares & parts online IBASIS.CO.UK

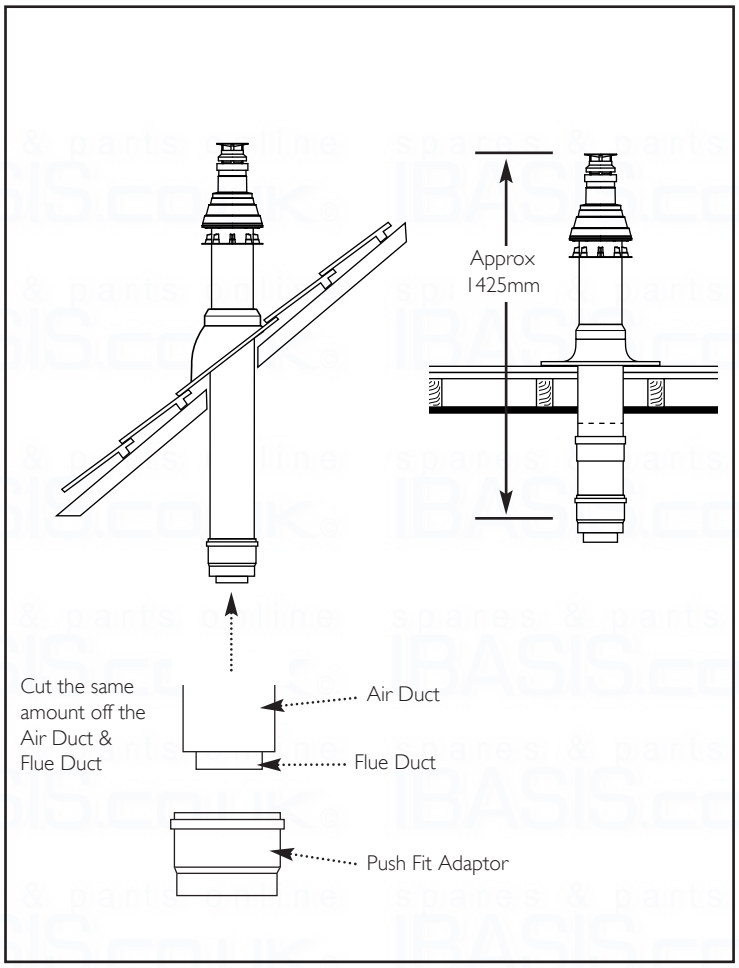

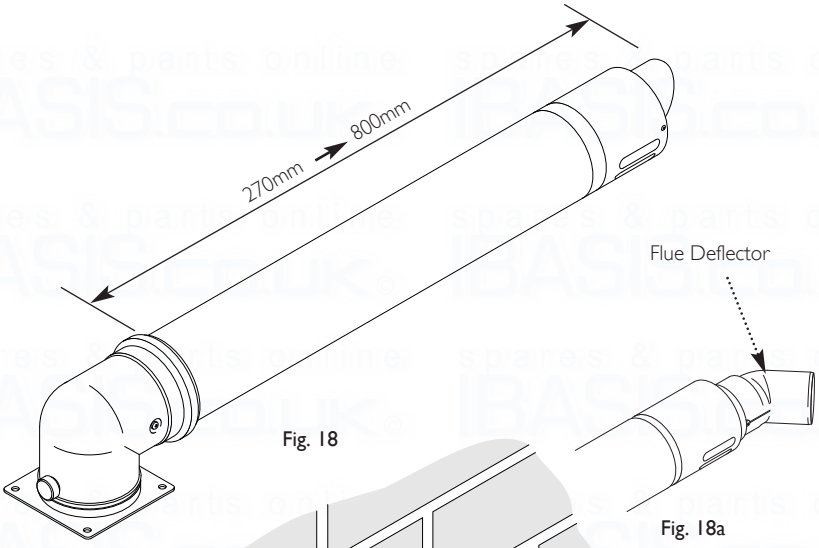

Fig. 18

Fig. 18a

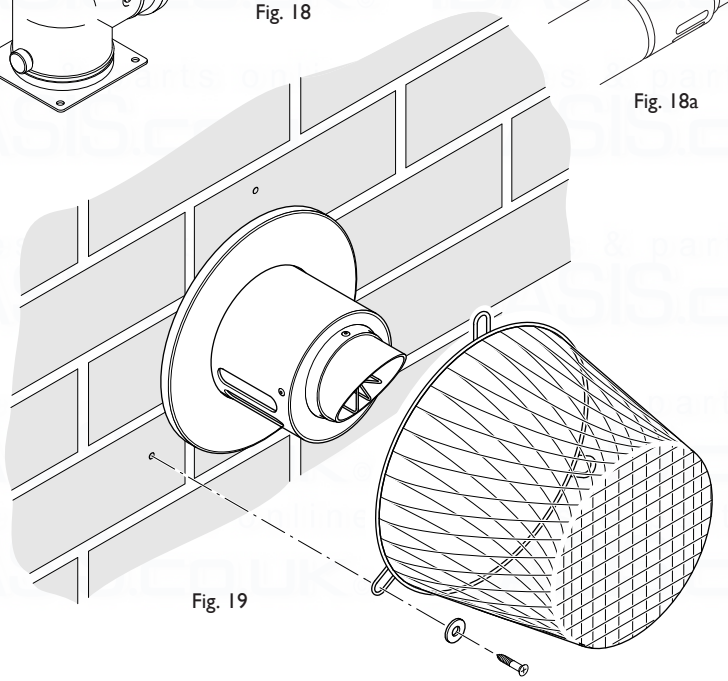

Fig. 19

8.0 Flue Options

8.6 For Roof Terminals

1. In the case of a pitched roof 25 - 50 degrees, position the lead tile to replace/flash over existing roof tiling. Make an aperture in the roof suitable for the lower tube of the roof terminal and ensure the integrity of the roof cover is maintained. The adjustable plastic collar can either be positioned on the lead tile or the lower tube of the roof terminal prior to the final positioning of the vertical flue through the tile. Check the collar is correctly located to suit required roof pitch (either 25° to 38° or 37° to 50°). From inside the roof adjust the flue to a vertical position and secure to the roof structure with the clamp supplied.

2. For flat roof installations the aluminium flashing must be incorporated into the roof covering and the appropriate aperture made in the roof decking. The vertical flue is lowered onto the flashing making sure the collar of the flue locates securely with the flashing. (A mastic seal may be necessary). From inside the roof, adjust the flue to a vertical position and secure to the roof structure with the clamp supplied.

IMPORTANT: If the boiler is not fitted immediately after the flue system, temporary precautions must be taken to prevent rain entry into the room of installation. Any precautionary measures must be removed prior to commissioning the boiler.

8.7 Flue Dimensions

The standard horizontal flue kit allows for flue lengths between 270mm (10⅝") and 800mm (32") from elbow to terminal (Fig. 18).

The maximum permissible equivalent flue length is: 4 metres.

NOTE: Each additional 45° of flue bend will account for an equivalent flue length of 0.5m.
e.g. 45° = 0.5m, 90° = 2 x 45° = 1m etc.

8.8 Terminal Guard (Fig. 19)

1. When codes of practice dictate the use of terminal guards, they can be obtained from most Plumbers' and Builders' Merchants.

2. When ordering a terminal guard, quote the appliance model number.

3. The flue terminal guard should be positioned centrally over the terminal and fixed as illustrated.

8.9 Flue Deflector (Fig. 18a)

1. If required, push the flue deflector over the terminal end and rotate to the optimum angle for deflecting plume. Secure the deflector to the terminal with screws provided.

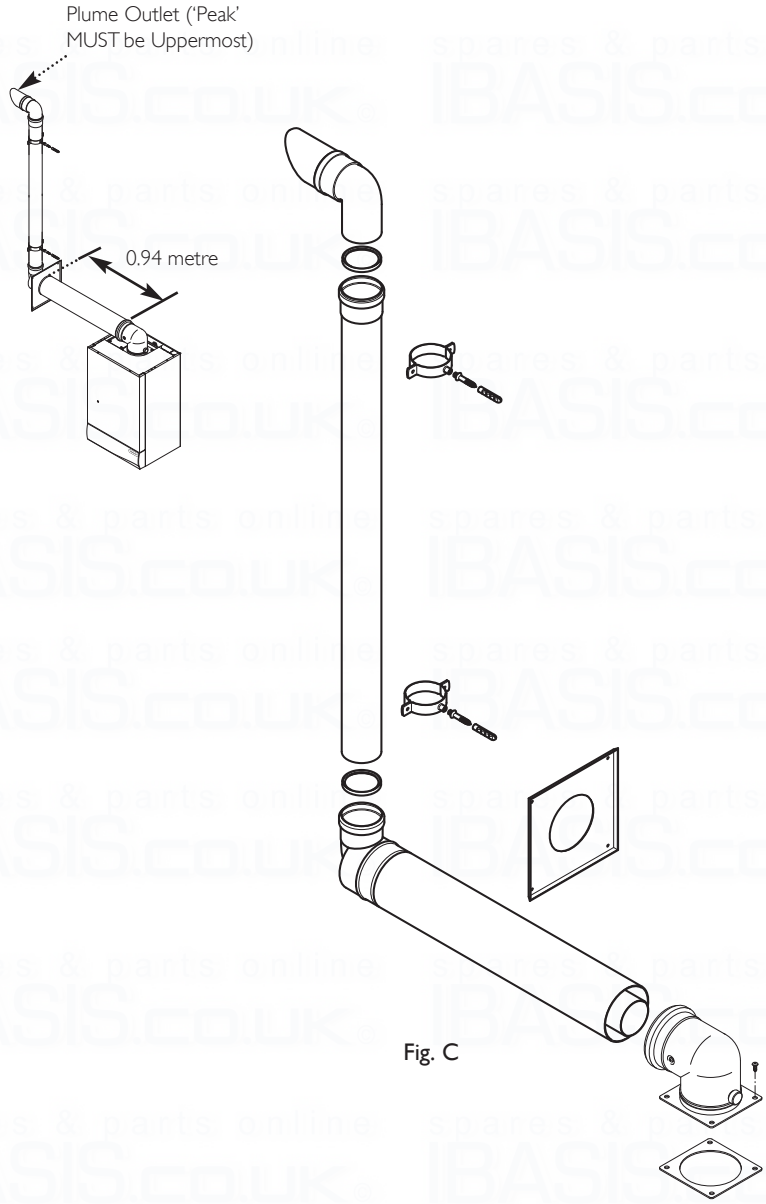

Fig. C

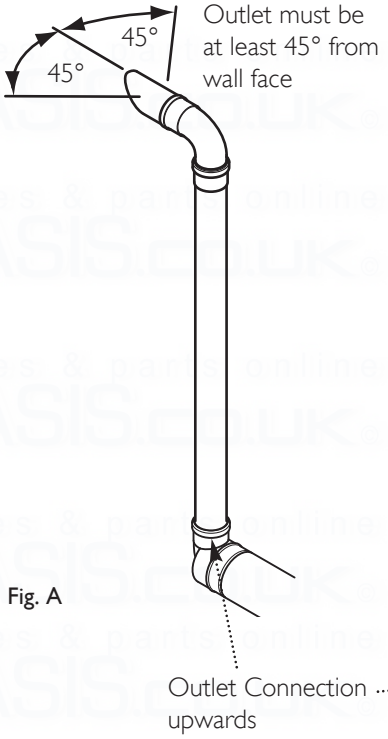

Fig. A

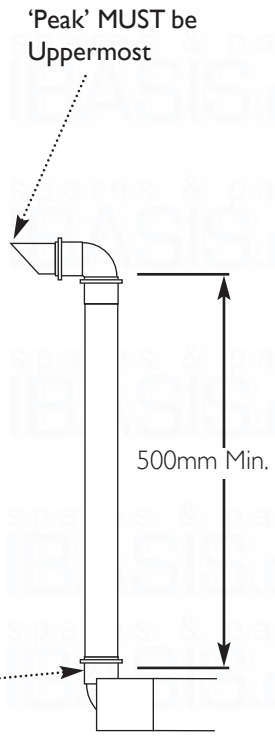

Fig. B

9.0 Plume Displacement

9.1 Plume Displacement Kit (P.D.K.)

Kit No 5121371

Content of kit

- 1 70/110 Concentric Flue
- 1 1m 70 Dia Exhaust Flue Pipe
- 2 Support Brackets
- 1 93° Elbow/Plume Outlet Assembly
- 1 Flue Trim
- 2 "O" Rings
- 1 Elbow with Gasket

1. This kit is recommended for installations where the condensate plume emitted from the flue may cause a nuisance or affect the surroundings.

2. The terminal must be positioned outside the building with the outlet connection upwards.

3. The 70Ø pipe connects to the outlet of the concentric terminal assembly. The elbow/plume outlet must be fitted to the end of the 70Ø pipe.

NOTE: The plume outlet must always be at least 45° to the wall, with the 'peak' uppermost to prevent rain entry (Figs. A & B), and be at least 2 metres above ground level. It must be secured as shown in Fig. C.

The outlet must be positioned so that any condensate plume is directed away from adjacent surfaces.

4. It is possible to reduce or increase (with the addition of extensions) the length of either or both the 70/110 concentric and 70Ø exhaust.

5. Standard concentric flue extension kits may be added between the boiler elbow and the terminal assembly.

6. The minimum length of the concentric flue is 100mm when measured from the edge of the boiler flue elbow. There is a further 45mm engagement into the elbow.

IMPORTANT: The maximum equivalent length of concentric flue is:- **4 metres**
Additional elbows may be fitted in the concentric flue, but the equivalent length must be reduced by 1 metre (93° elbow) or 0.5 metres (45° elbow).

7. 70Ø 1 metre extensions (including support bracket), and additional 93° & 45° elbows are available. Any additional 93° & 45° elbows must be accounted for when calculating flue lengths. 70Ø 93° elbows are equivalent to 3.5 metres of straight length and 45° elbows to 1 metre.

NOTE: Permitted positions of the plume outlet relative to doors, windows etc. are the same as for conventional concentric flues as detailed in the main Installation & Servicing Instructions and BS5440 Pt. 1. It is **NOT** necessary to fit a terminal guard over the air inlet or the plume outlet.

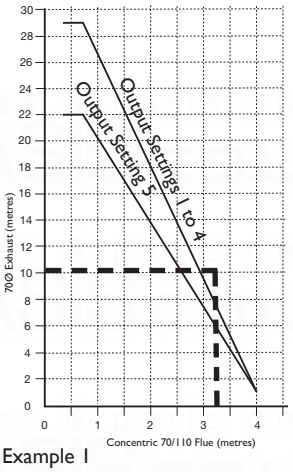

Example 1
Flue Lengths - Not Permissible

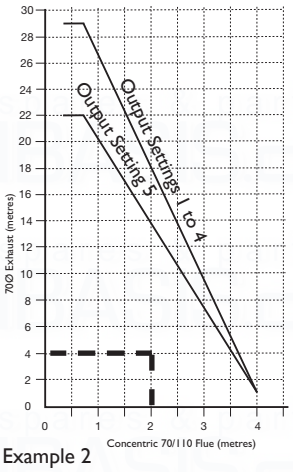

Example 2
Flue Lengths - OK

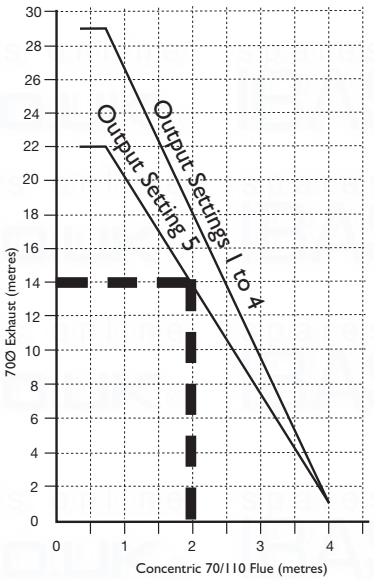

Example 3
Flue Lengths - OK

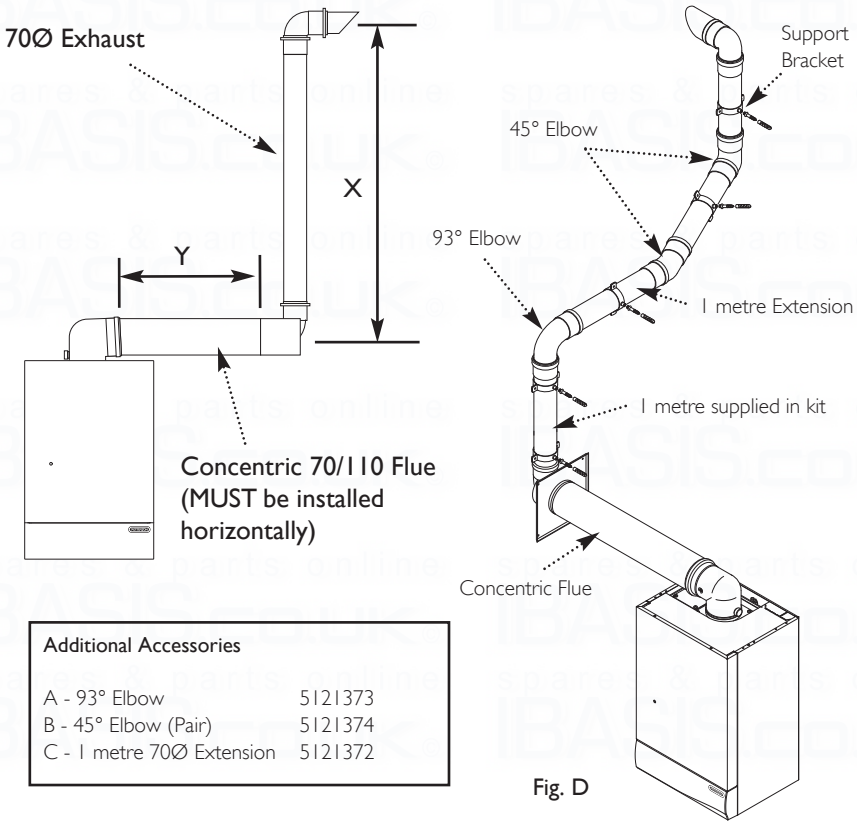

Fig. D

Additional Accessories	
A - 93° Elbow	5121373
B - 45° Elbow (Pair)	5121374
C - 1 metre 70Ø Extension	5121372

9.0 Plume Displacement

9.2 Determining Permissible Lengths - P.D.K.

In the graph the solid line diagonal represents the relationship between the concentric flue assembly (and any extensions) and the 70Ø exhaust (and any extensions or additional bends).

Example 1 - Not Permissible
If, for instance, a concentric length of 3.25 metres was required and the 70Ø exhaust needed to be 10 metres the graph shows that this combination would NOT be permissible as the intersection point would be above the solid diagonal line.

Example 2 - Flue Lengths OK
Where both lengths have been determined they can be applied to the graph to check that the installation is permissible. For example, if it was known that 2 metres of concentric flue and 4 metres of 70Ø exhaust were required, the values could be applied to the graph as shown in Example 2. As the point of intersection of the dotted lines is below the solid diagonal line, the combination of lengths is shown to be acceptable.

Example 3 - Flue Lengths OK
In the example shown, assume that the concentric part of the flue needs to be 2 metres long. Find the position of '2' on the horizontal axis of the graph and then project upwards to the solid diagonal line. This is represented by the vertical thick dotted line. Where this dotted line intersects with the solid diagonal line on the graph, project across to the vertical axis. As can be seen this corresponds with 14 metres. Therefore, the total equivalent length of the 70Ø exhaust can be up to 14 metres. Any elbow equivalencies must be accounted for i.e. 93° elbows are equal to 1 metre, each 45° elbow to 0.5 metres.

Flue Length - Worked Example
British Gas Potterton Precision - Output Setting 5

In Fig. D opposite an additional 93° elbow and pair of 45° elbows have been included in the 70Ø exhaust.
Also 3 straight extension pieces have been used.

To calculate total length:-

Length of 70Ø supplied in kit =	1 metre
3 x 1 metre Extensions =	3 metres
1 x 93° Elbow =	1 metre
2 x 45° Elbow =	1 metre (0.5 metres each)
Total 70Ø =	6 metres

After consulting the table in Example 3 it can be determined that the concentric flue could be up to approximately 3.25 metres long.

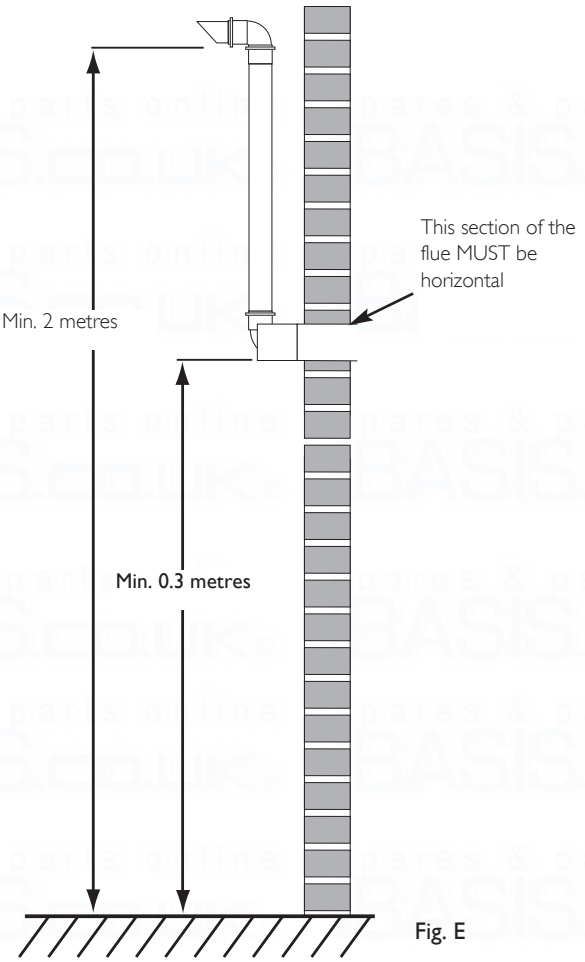

Fig. E

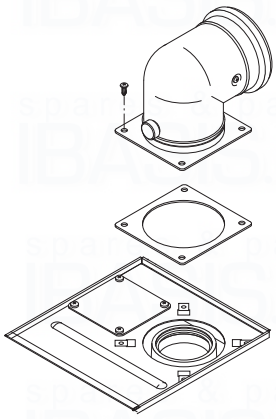

Fig. F

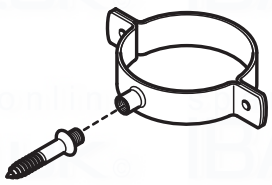

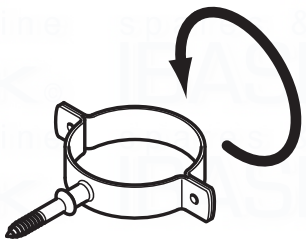

Fig. G

9.0 Plume Displacement

9.3 General Fitting Notes - P.D.K.

1. Cut a hole in the external wall which the horizontal concentric flue assembly will pass through.

2. When completed the terminal must be at least 2 metres above ground level (Fig. E).

3. Measure and cut to size the concentric assembly and any extensions that are being used.

4. Insert the concentric assembly through the hole from outside the building and mark the position of the flue trim securing holes.

5. Drill and plug the wall to accept the flue trim securing screws, and re-insert the concentric assembly through the wall.

6. Connect any extensions that are being used to the concentric assembly. Engage the extension or concentric assembly in the boiler flue elbow.

7. Fit the boiler flue elbow to the boiler top panel, ensuring the gasket is in place (Fig. F).

Ensure that the concentric assembly is horizontal and that the external air inlet is to the bottom. Any extensions should fall back to the boiler.

8. Use suitable brackets to support the concentric assembly and any extensions, and make good inside and outside. Secure the flue trim to the wall.

9. The 70Ø exhaust can now be fitted to the spigot at the terminal end.

10. If it is necessary to shorten the 70Ø exhaust or any of the extensions, the excess material must be cut from the plain end of the pipe.

11. Determine the position of the 70Ø exhaust and mark on the wall a suitable position for the support bracket. Drill and plug the wall. If extensions are being used, a support bracket is supplied in each kit.

12. Engage the M6 threaded part of the mounting bolt in the boss on the support bracket. Using the bracket for leverage, screw the mounting bolt into the plugged hole until the bracket is secure and level (Fig. G).

13. Slacken the two screws securing the retaining strap to the bracket, and pivot the strap aside to allow fitting the 70Ø exhaust.

14. Complete the installation of the 70Ø exhaust, securing in the brackets. Fit the 93° elbow and plume outlet. Ensure the plume outlet is at least 45° to the wall and that the 'peak' is uppermost.

15. Continue with installation and commissioning of the boiler.

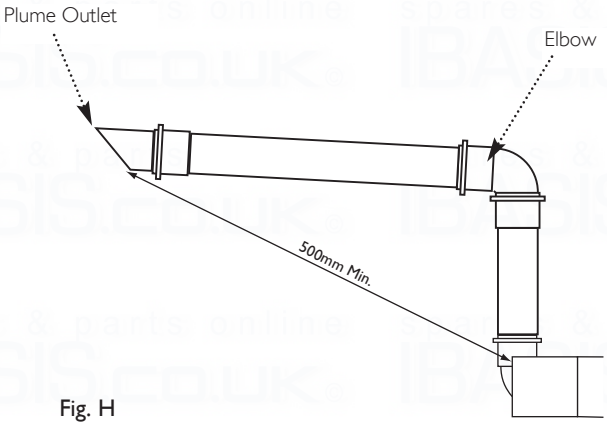

Fig. H

9.3 General Fitting Notes - P.D.K. (cont.)

16. For aesthetic purposes it is permissible to route the 70Ø exhaust in an enclosed box, but the air inlet and plume outlet MUST remain in free air.

17. It is also possible to separate the plume outlet from the 93° elbow to allow the flue to be installed as shown in Fig. H.

18. When the plume outlet is positioned under a balcony or other projection (Figs. I & J) it must protrude at least 200mm (it is not necessary to extend it further than this).

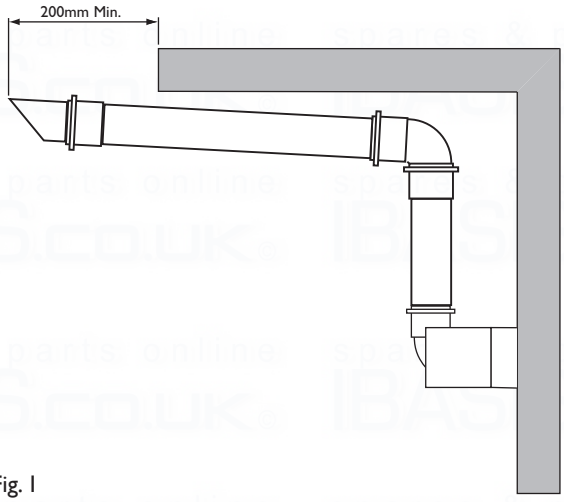

Fig. I

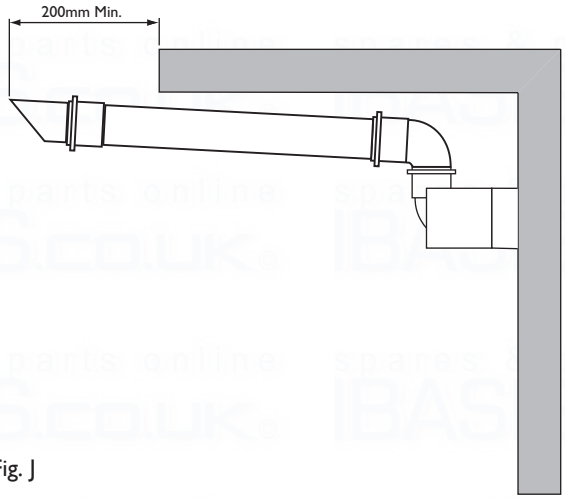

Fig. J

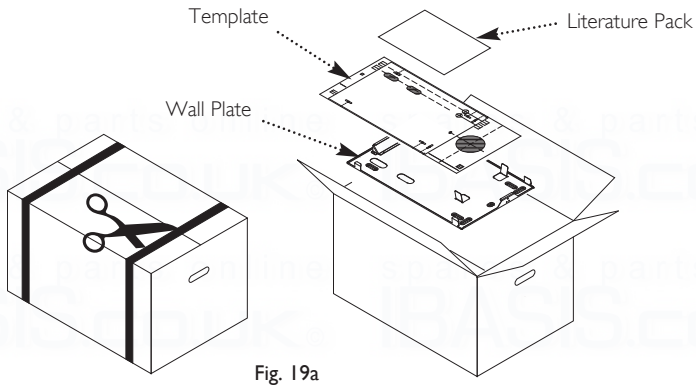

Fig. 19a

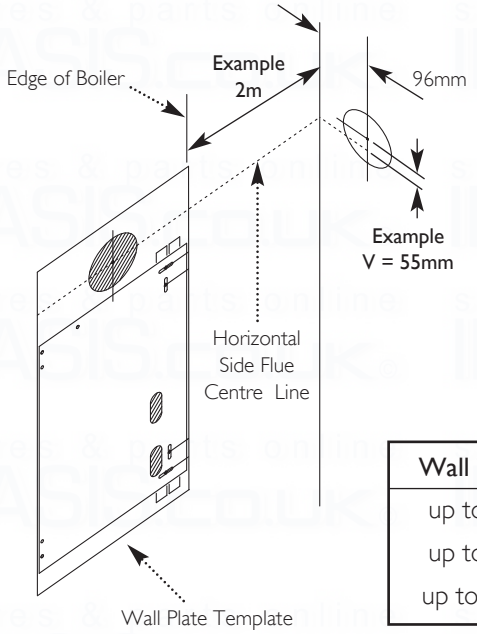

EXAMPLE: Boiler is 2 metres away from corner of wall, flue duct hole is 55mm up from horizontal side flue centre line. This will maintain the approx 1.5° backfall to the boiler.

Wall Thickness	Flue Hole ø
up to 227mm	127mm core drill
up to 750mm	150mm core drill
up to 1200mm	175mm core drill

Fig. 20

Backfall to the Boiler, ie. 2m flue offset (V) position 55mm

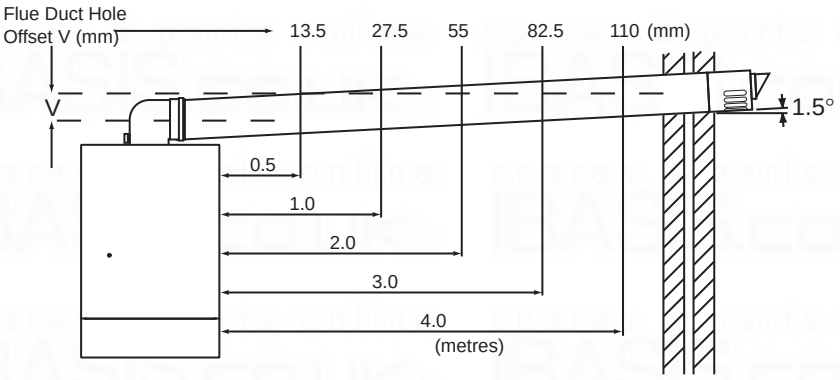

Distance in metres from boiler to the wall.
For pipe lengths greater than 4m increase the off-set by 26mm for every additional metre to maintain approx 1.5° inclination.

Fig. 21

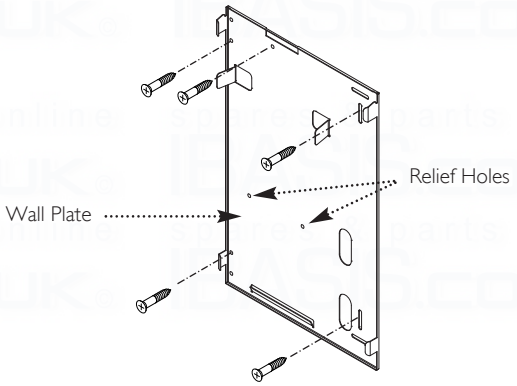

Fig. 22

10.0 Installation

Check Site Requirements (section 7) before commencing.

10.1 Initial Preparation

The gas supply, gas type and pressure must be checked for suitability before connection (see Section 7.4).

1. Cut the banding and remove the fixing template, wall plate and literature pack (Fig. 19a) from the carton.

2. After considering the site requirements (see Section 7.0) position the template on the wall ensuring it is level both horizontally and vertically.

NOTE: When fitting Plume Displacement Kit refer to the instructions supplied for details of installation of the flue.

3. Mark the position of the fixing holes for the wall plate (Fig. 20).

4. Mark the centre of the flue hole (rear exit).
For side exit: project the horizontal side flue centre line into the corner of the room and along the wall to where the flue hole will be drilled. (Fig. 20).
The diagram (Fig. 21) shows the dimensions required to ensure any horizontal flue is installed with the correct fall to the boiler. Mark the offset (V) dimension and if required, mark the position of the gas and water pipes. Remove the template.

5. Cut the hole for the flue (minimum diameter 127mm, see table (Fig. 20) for wall thicknesses and flue diameters).

6. Drill and plug the wall as previously marked. Secure the wall plate (Fig. 22).

7. Ensuring the wall plate is level both horizontally and vertically, drill and plug at least 5 securing positions at the top and bottom through the wall plate. Utilising the slots available ensure the wall plate is square and secure to the wall (Fig. 22).

8. Additionally drill 2 relief holes 10mm deep in the wall as shown on template (Fig. 22).

8. Loosely route the condensate discharge pipe to the lower left hand side of the wall plate.

10.2 Preparing The Boiler

1. Remove the outer carton and packaging.

2. Lift the outercase upwards and remove.

3. Remove the internal packaging.

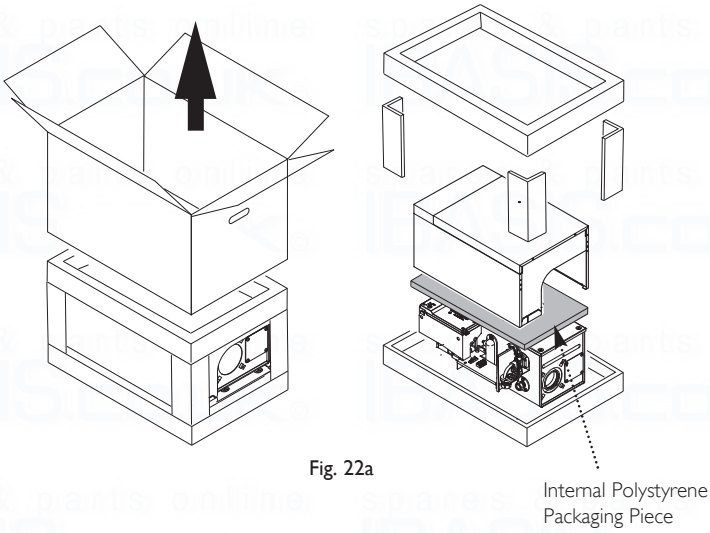

Fig. 22a

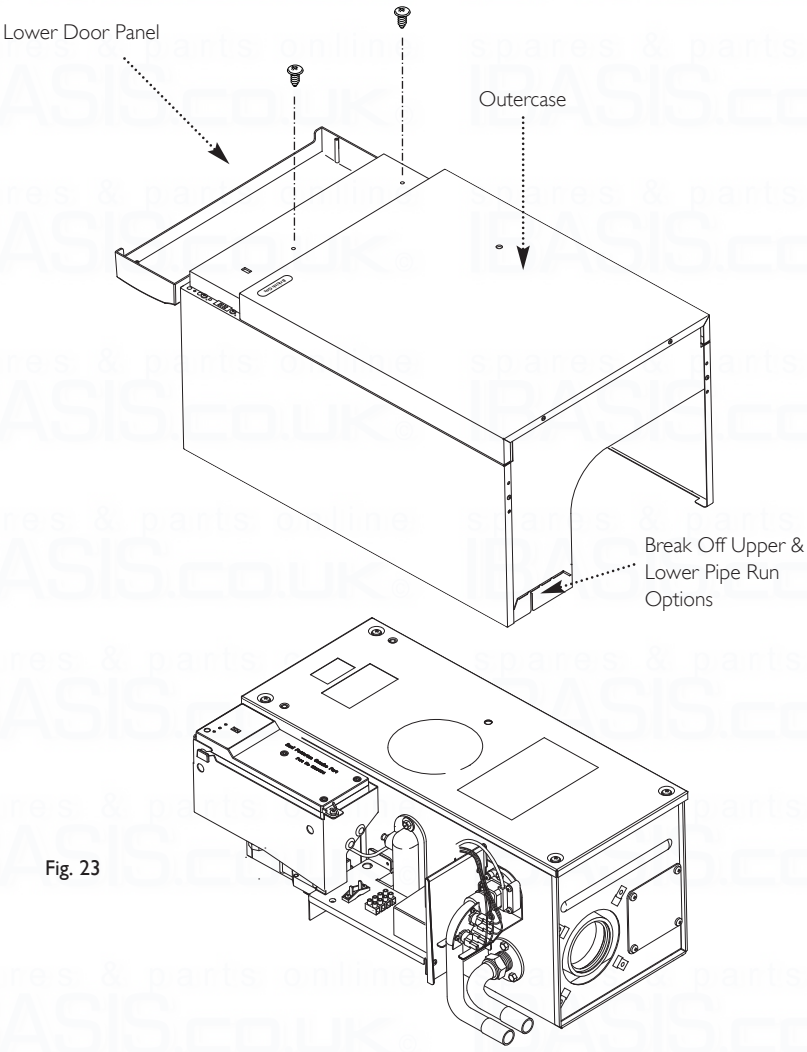

Fig. 23

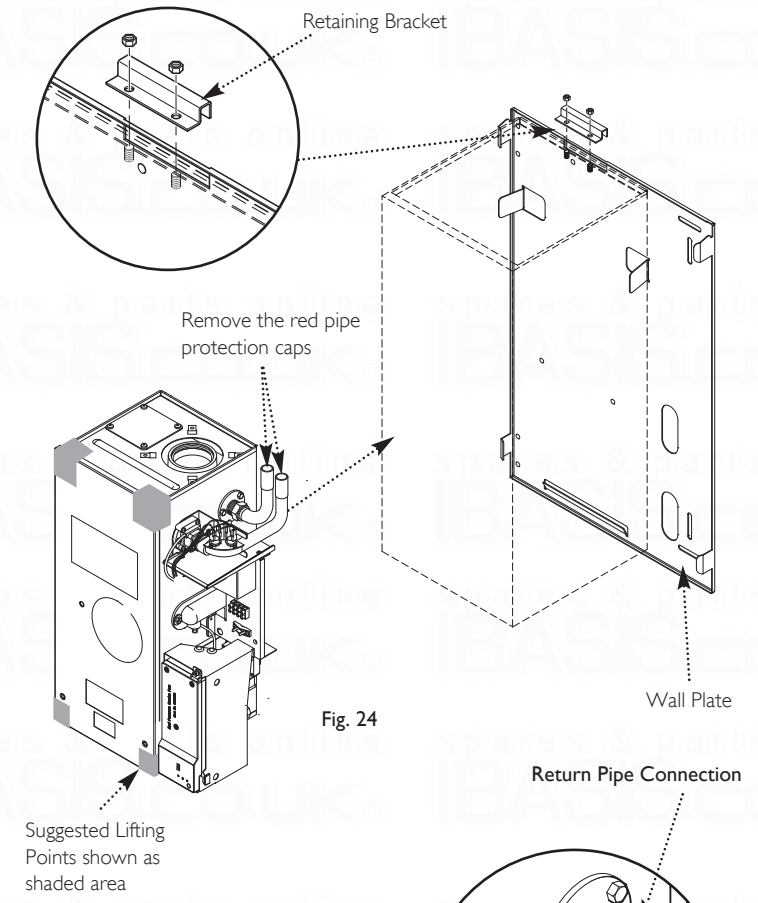

Fig. 24

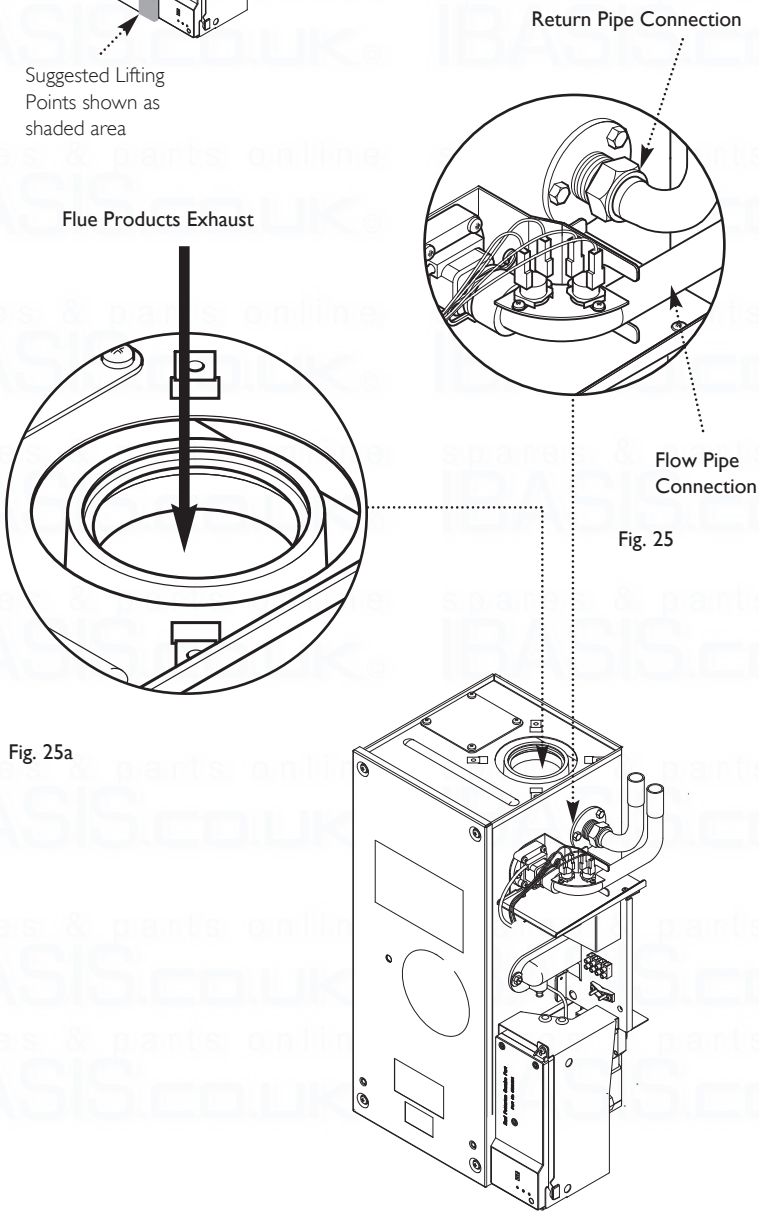

Fig. 25

Fig. 25a

10.3 Fitting The Boiler (Fig. 24)

1. Obtain retaining bracket and two M6 nuts from fitting bag.

2. Offer up the boiler to the wall plate using the lifting points shown in Fig. 24 and locate the rear bottom edge onto the self locating support at the base of the wall plate. (See **Safe Manual Handling** page 5.)

NOTE: When installing in a Loft/Small Compartment, access for lifting the boiler from the front can be gained for two people using the lifting points. (Fig. 24).

3. Rotate the boiler up to wall plate and engage retaining bracket, securing with the two nuts.

4. Ensure the boiler is secured with the retaining bracket.

5. Remove red pipe protection caps from the FLOW and RETURN connections.

10.4 Making the Water Connections (Fig. 25)

1. The boiler has two side water connections which are labelled FLOW and RETURN. The front connection is the flow pipe and the rear threaded connection is the return.

2. It is essential that the flow and return pipes are connected to the boiler correctly. The flow connection incorporates the boiler thermostats and a flow switch.

3. The boiler connections will accept 22mm fittings.

NOTE: When the output is at setting 5 (see Section 12.1) 28mm pipe should be used to connect to the boiler flow and return using suitable reducing fittings.

4. If the installation requires that the system pipework originates from the bottom of the boiler, then the flow and return pipes will need cutting, as they terminate upwards.

10.5 Making the Condensate Drain Connection

1. Connect the condensate drain using the 1"BSP nut and seal supplied. (see section 7.6).

NOTE: To ensure the correct operation and integrity of the condensate drainage system - Carefully pour approximately 1 cupful (250ml) of water into the flue products exhaust, at the top of the heat exchanger (Fig. 25a) to ensure a seal is made in the trap.

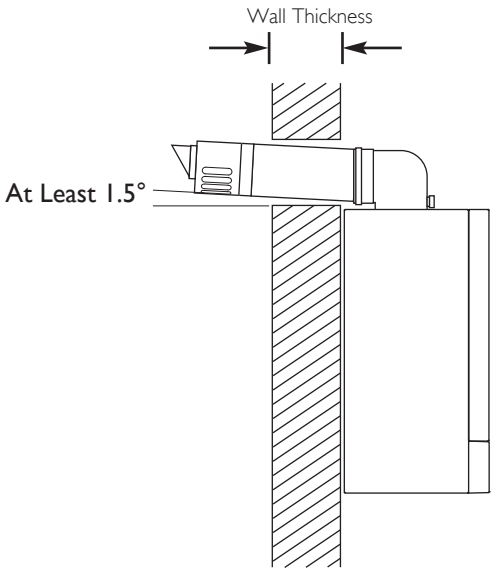

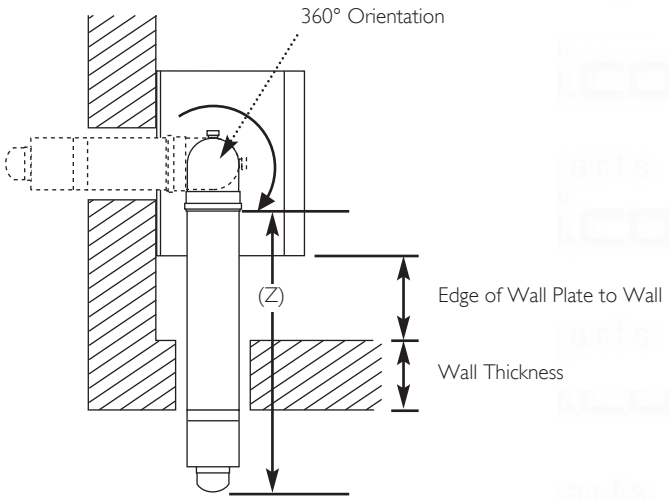

Fig. 26

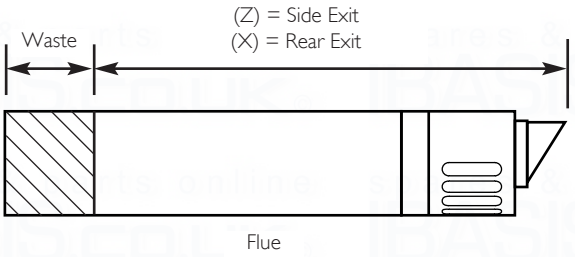

Fig. 27

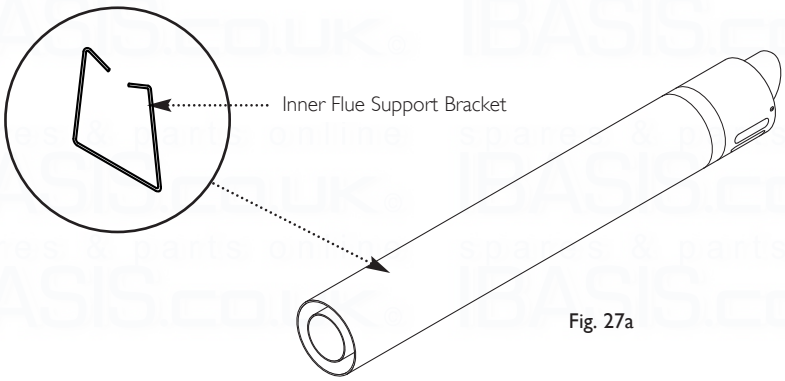

Fig. 27a

10.6 Making the Gas Connection

1. Connect the gas supply to the G½ (½in BSPT Internal) gas tap. This is located on the lower right side of the boiler, access by hinging down the PCB housing (see Fig. 32).

10.7 Fitting The Flue

Before fitting the flue, check the condensate drain integrity (see section 10.5).

IMPORTANT: The flue should always be installed with at least 1.5° fall from terminal to elbow, to allow condensate to run back to the boiler.

HORIZONTAL FLUE

1. The standard flue is suitable for lengths 270mm minimum to 800mm maximum (measured from the edge of the flue elbow outlet).

Rear Flue: maximum wall thickness - 630mm
Side Flue: maximum wall thickness - 565mm (left or right)

2. **For rear exit** - measure the wall thickness (Fig. 26) and to this dimension add 181mm. This dimension to be known as (X).
i.e.
(X) = wall thickness + 181

3. Take the flue and mark off (X) from the terminal end as indicated in the diagram (Fig. 27).

Check your dimensions.

The flue tubes are fixed together. Cut through both tubes whilst resting the flue on the semi-circular packing pieces. Deburr both tube ends.

4. **For side exit** - measure the distance from the edge of the wall plate to the inner face of the wall (Fig. 26) and to this dimension add the wall thickness + 250mm. This dimension to be known as (Z).
i.e.
(Z) = wall plate to wall + wall thickness + 250

5. Take the flue and mark off (Z) from the terminal end as indicated (Fig. 27).

Check your dimensions.

The flue tubes are fixed together. Cut through both tubes whilst resting the flue on the semi-circular packing pieces. Deburr both tube ends.

IMPORTANT: Check all measurements before cutting.

NOTE: When cutting ensure the cut does not interfere with the inner flue support bracket (Fig. 27a).

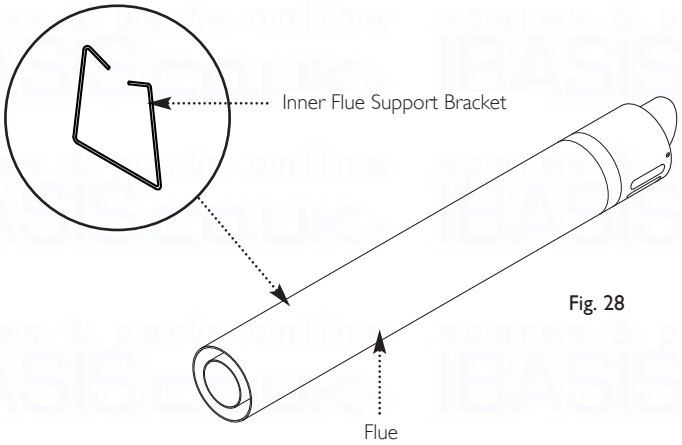

Fig. 28

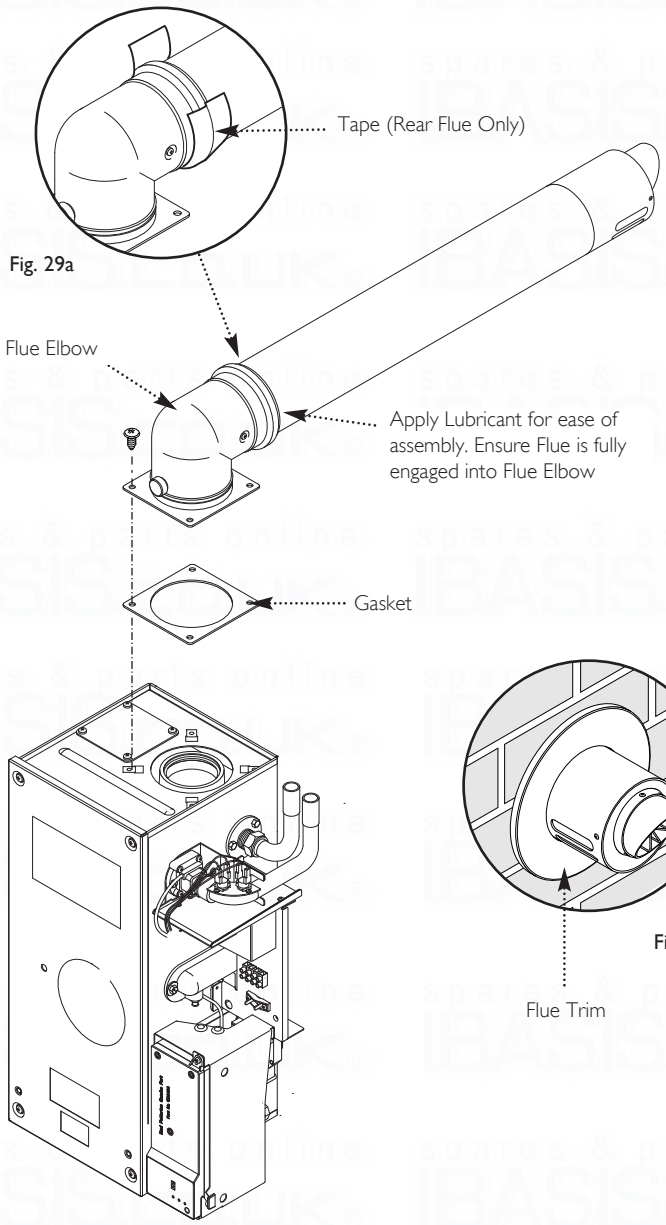

Fig. 29a

Fig. 29

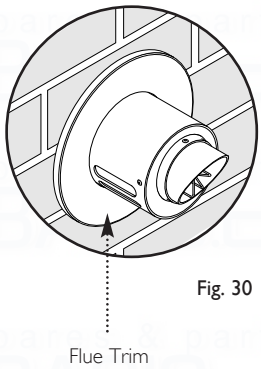

Fig. 30

10.7 Fitting the Flue (Cont)

6. Ensure the inner flue support bracket is positioned in the flue (Fig. 28).

7. Engage the flue into the flue elbow using soap solution to ease the engagement ensuring the flue is assembled as shown (Fig. 29). **Rear Flue Only:-** Take the tape supplied in the kit and wrap around the joint between the flue and the elbow (Fig. 29a).

8. Place the gasket over the flue exit on the boiler.

9. Slide the flue assembly through the hole in the wall.

10. Engage the elbow on to the flue connection on top of the boiler. Secure with the four screws supplied in the kit.

11. Make good between the wall and air duct outside the building ensuring the 1.5° drop between the terminal and elbow.

12. The flue trim should be fitted once the installation is complete and the flue secure (Fig. 30). Apply a suitable mastic to the inside of the trim and press against the wall finish, making sure the brickwork is dust free and dry.

13. If necessary fit a terminal guard (see Section 8.8).

VERTICAL FLUEING

1. Only a flue approved with the British Gas Potterton Precision can be used.

10.8 Making The Electrical Connections

NOTE: The boiler is supplied with 1 metre of 3 core cable connected. If for any reason this is removed re-wire as described below.

WARNING: This appliance must be earthed

1. The electrical connections are on the right hand side of the unit.

2. Undo the two screws securing the cable clamp and place to one side (Fig. 31).

3. Route the incoming electrical cable/s through the grommet in the support bracket. This will prevent damage to the cable.

4. Lay the cable through the cable clamp to gauge the length of cable required when it is connected to the 4-way terminal block.

5. Connect the (S/L), (N) and (⏚) wires to the 4-way terminal block (Fig. 33) and refit the cable clamp (Fig. 31).

6. Check the electrical installation for:-
earth continuity, short circuits, resistance to earth, correct polarity and fuse failure.

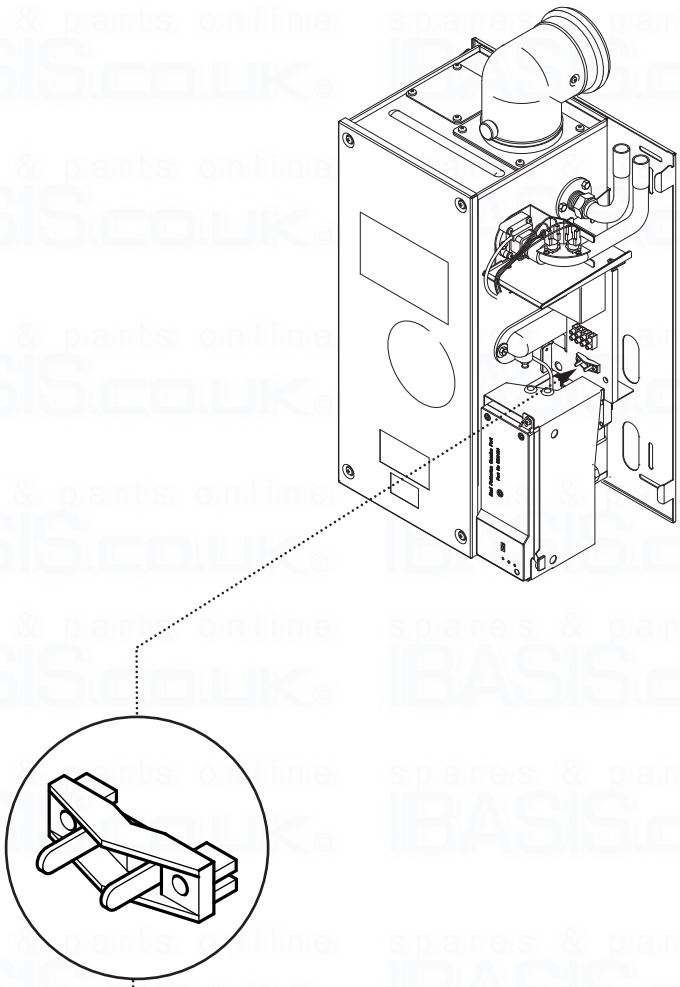

Fig. 31

Cable Clamp

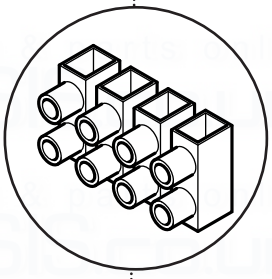

4-way Terminal Block

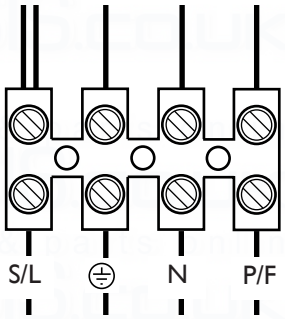

Fig. 33

Optional Pump Feed Connection only required for fully TRV'd system

IMPORTANT: When output is at setting 5 (see Section 12.1) the pump cannot be wired directly to the boiler. Only use wiring diagrams i & ii in Section 6.6 when set to 5.

11.1 Schematic Wiring Diagram

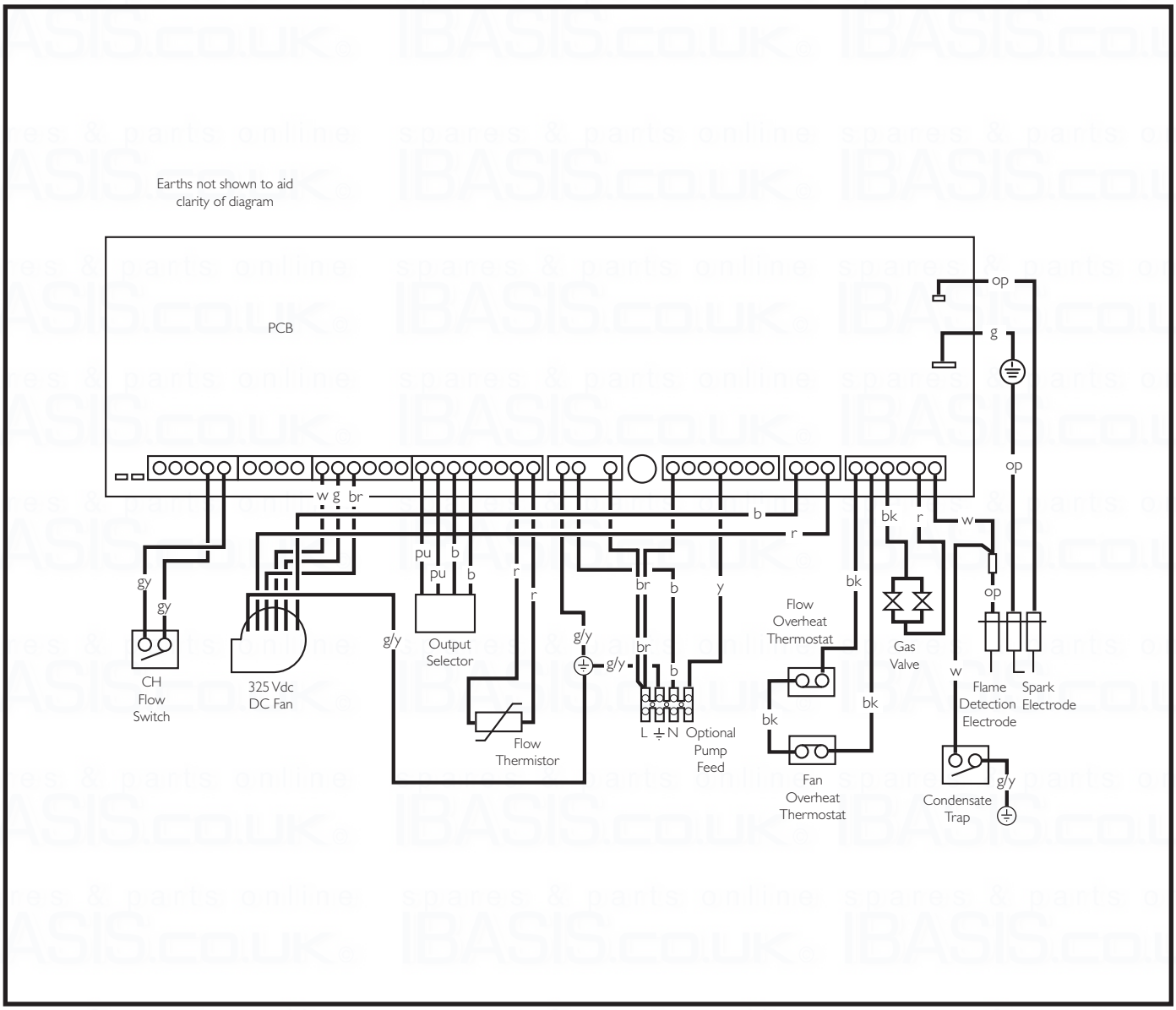

Key To Wiring Colours

b - Blue	r - Red
bk - Black	g - Green
w - White	g/y- Green/Yellow
br - Brown	op - Opaque
gy - Grey	y - Yellow
pu - Purple	

11.2 Illustrated Wiring Diagram

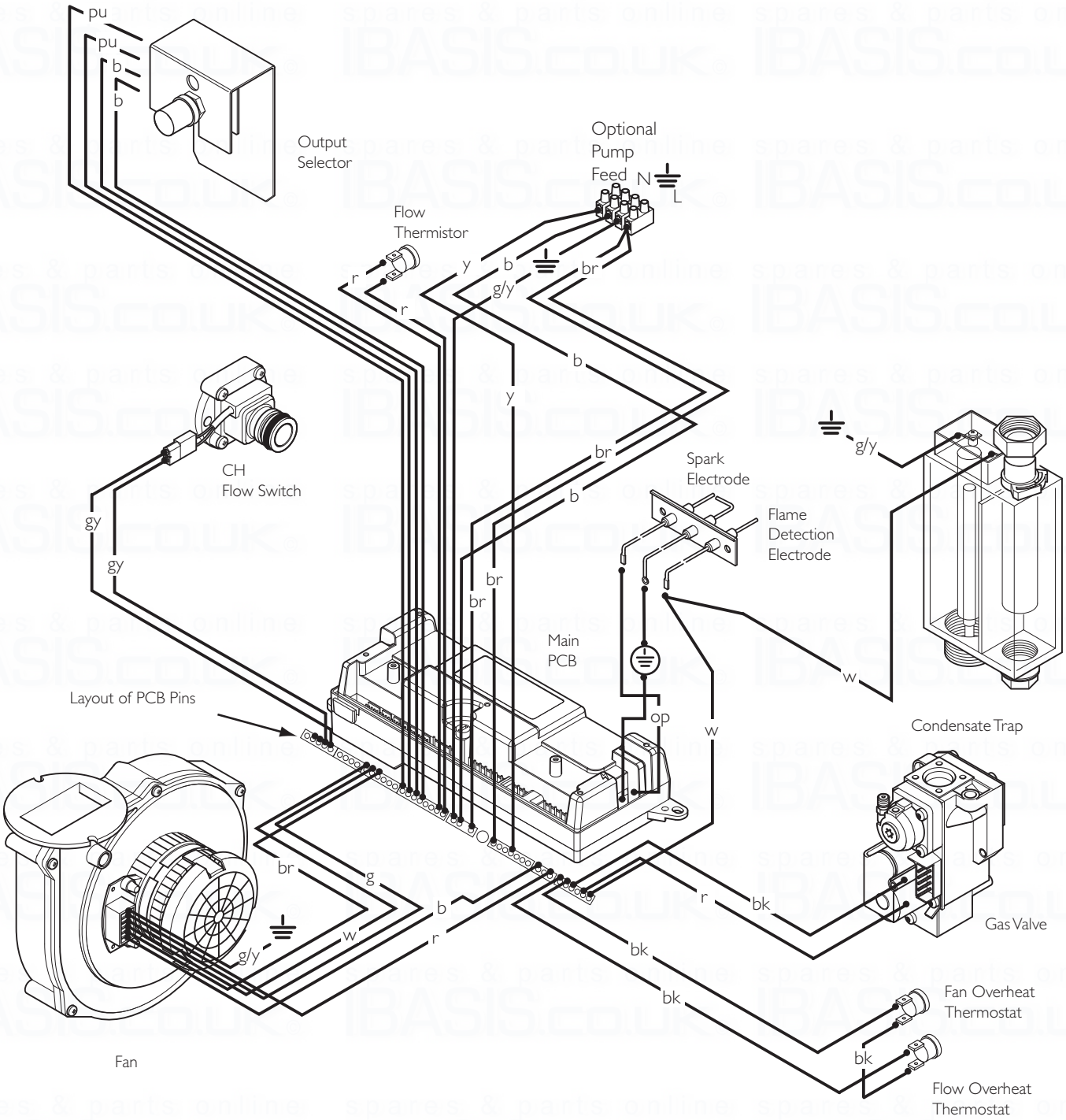

Wiring Key

b - Blue
bk - Black
br - Brown
r - Red
w - White
g/y - Green/Yellow
g - Green
gy - Grey
op - Opaque
y - Yellow
pu - Purple

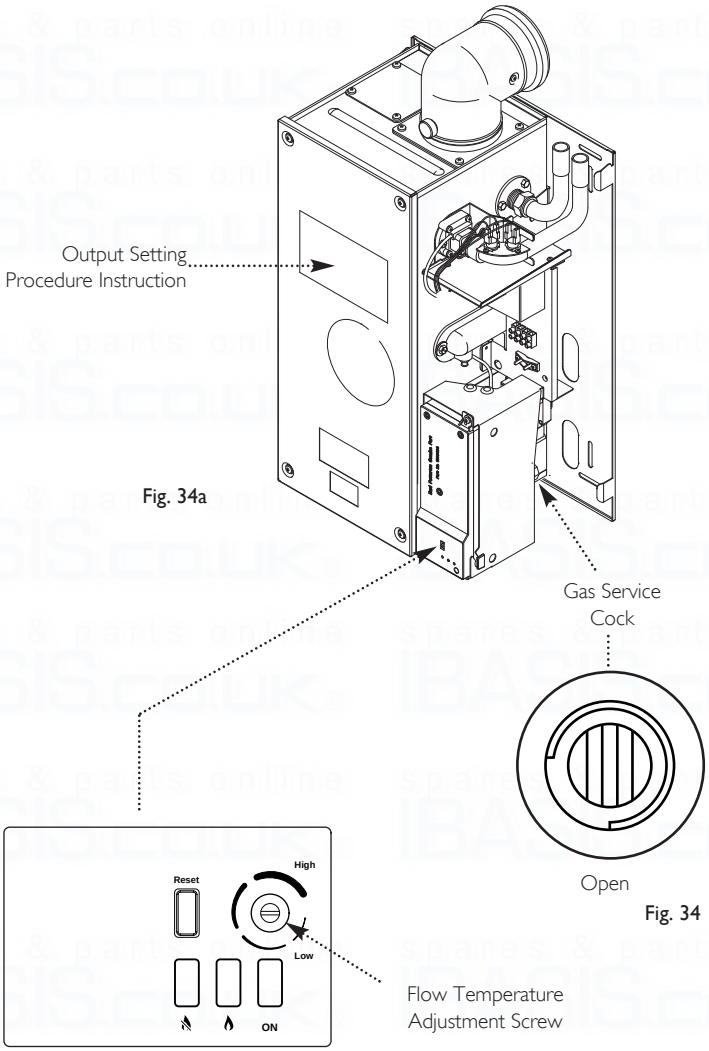

Fig. 34a

Fig. 34

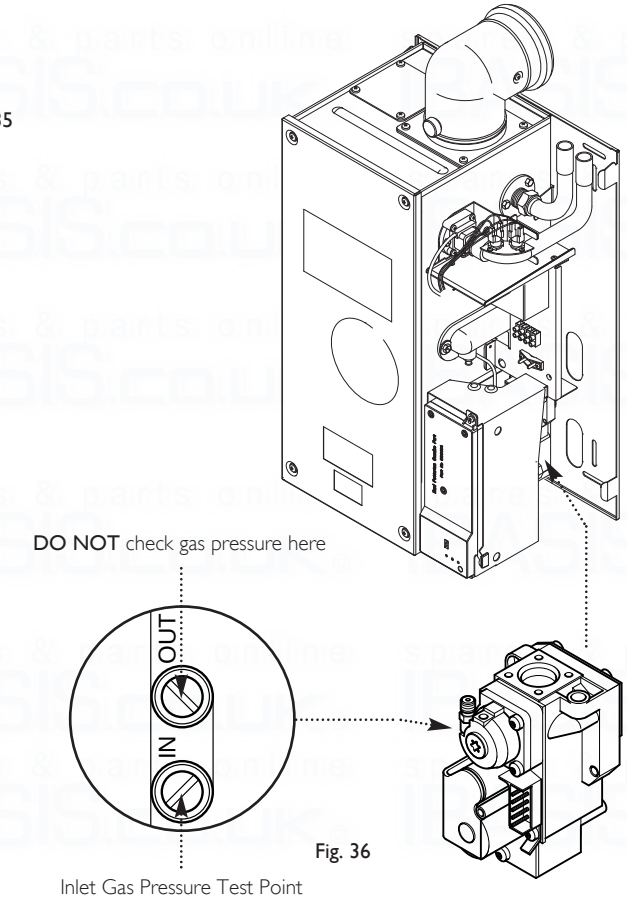

Fig. 35

Fig. 36

12.0 Commissioning the Boiler

12.1 Commissioning the Boiler

WARNING: The PCB Control and Fan Assembly are 325 Vdc. Isolate at supply before access.

1. Reference should be made to BS:EN 12828 & 14336 when commissioning the boiler.

2. At the time of commissioning, complete all relevant sections of the Benchmark Checklist at the rear of this publications.

3. Flush the whole system using a suitable flushing agent (see Section 6.2) and vent the radiators. Check for water leaks.

4. Refill the system with inhibitor following the inhibitor manufacturer's instructions and BS 7593 Code of Practice for Treatment of Water in Domestic Hot Water Central Heating Systems (see Section 6.2).

5. Complete any label supplied with the inhibitor and attach to the inside of the boiler case. Detail of system treatment should be added for future reference.

NOTE: The boiler output can be adjusted to suit system demand. See the Output Setting Procedure Instruction on the boiler front panel (Fig. 34a). This must be performed by a competent registered person. The ELECTRICAL SUPPLY to the boiler MUST BE ISOLATED BEFORE ADJUSTMENT. Take the 'IMPORTANT' label from the fitting kit and apply firmly over the Output Selector Switch Cover securing screw. If the highest output is selected 28mm pipe should be connected to the boiler flow and return pipes.
No adjustment of the gas valve is permissible !

6. Turn the gas supply on and purge in accordance with IGEM Publication UP/1B in GB and in IE I.S. 813 "Domestic Gas Installations".

7. Remove the top RH securing screw and hinge down the PCB housing to gain access to the gas service cock (see Fig. 32). Turn the gas service cock anticlockwise to the ON position and check for gas tightness up to the gas valve (Fig. 34).

8. Having checked:
- That the boiler has been installed in accordance with these instructions.
- The integrity of the flue system and the flue seals.
- The integrity of the boiler combustion circuit and the relevant seals.

IMPORTANT: The combustion for this appliance has been checked, adjusted and preset at the factory for operation on the gas type specified on the appliance data plate. However, it is still necessary to check the combustion as part of commissioning (see Flow Chart 12.2). Do not adjust the air/gas ratio valve.

12.2 Checking the Combustion

1. This procedure is mandatory in GB from April 2014. It is strongly recommended to perform the procedure before that date.

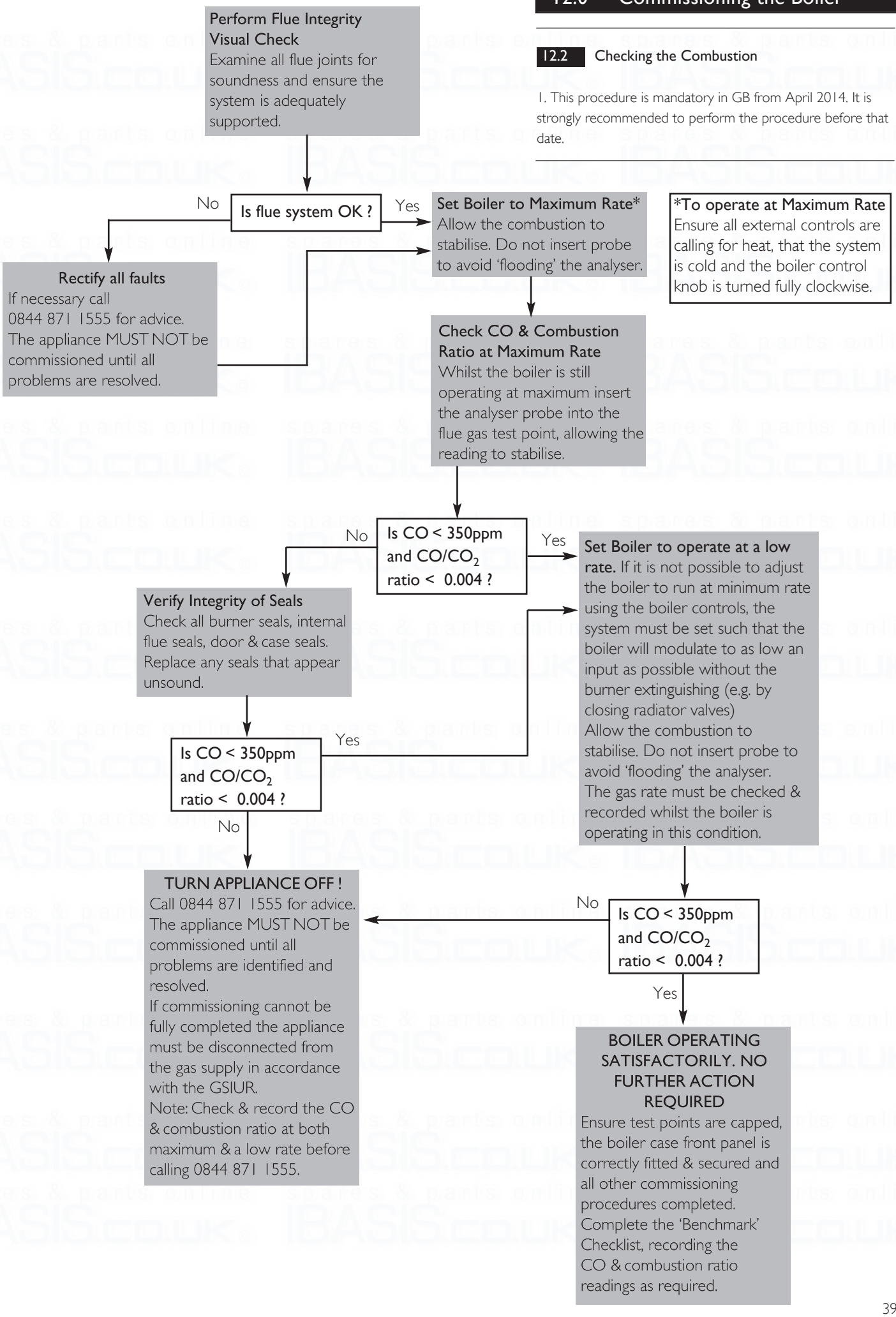

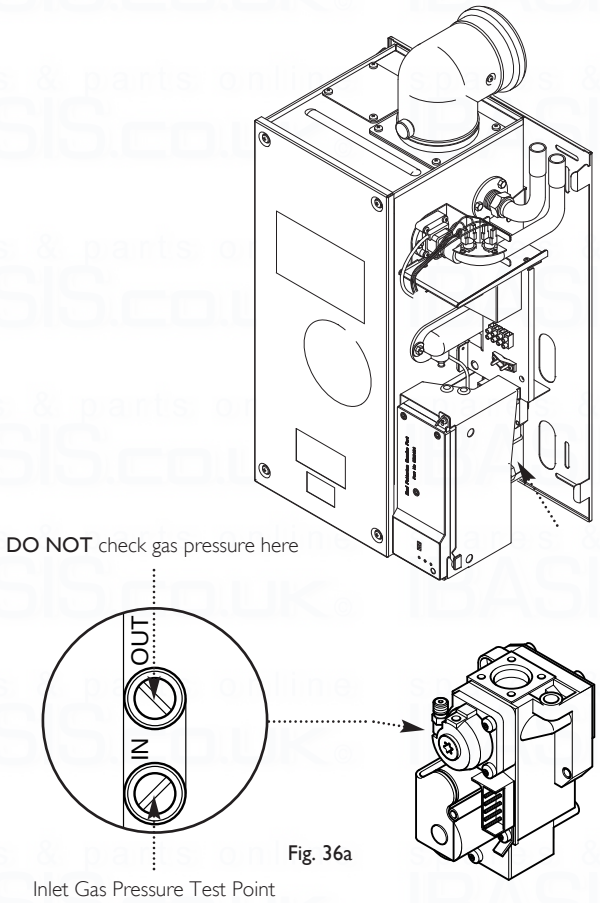

Fig. 36a

12.3 Check the Operational (Working) Gas Inlet Pressure

1. Ensure that all controls are calling for heat and maximum load is applied to the system.

2. With the boiler operating in the maximum rate condition check that the operational (working) gas pressure at the inlet gas pressure test point is in accordance with B.S. 6798 & B.S. 6891.

3. Ensure that this inlet pressure can be obtained with all other gas appliances in the property working.

Measure the Gas Rate

4. With any other appliances & pilot lights turned OFF the gas rate can be measured. It should be as shown in Section 4.0 Technical Data.

5. Carefully read and complete all sections of the Benchmark Commissioning Checklist at the rear of this publication that are relevant to the boiler and installation. These details will be required in the event of any warranty work. The publication must be handed to the user for safe keeping and each subsequent regular service visit recorded.

6. For IE, it is necessary to complete a "Declaration of Conformity" to indicate compliance with I.S. 813. An example of this is given in I.S. 813 "Domestic Gas Installations". This is in addition to the Benchmark Commissioning Checklist.

13.0 Fitting the Outer Case

13.1 Fitting The Outer Case

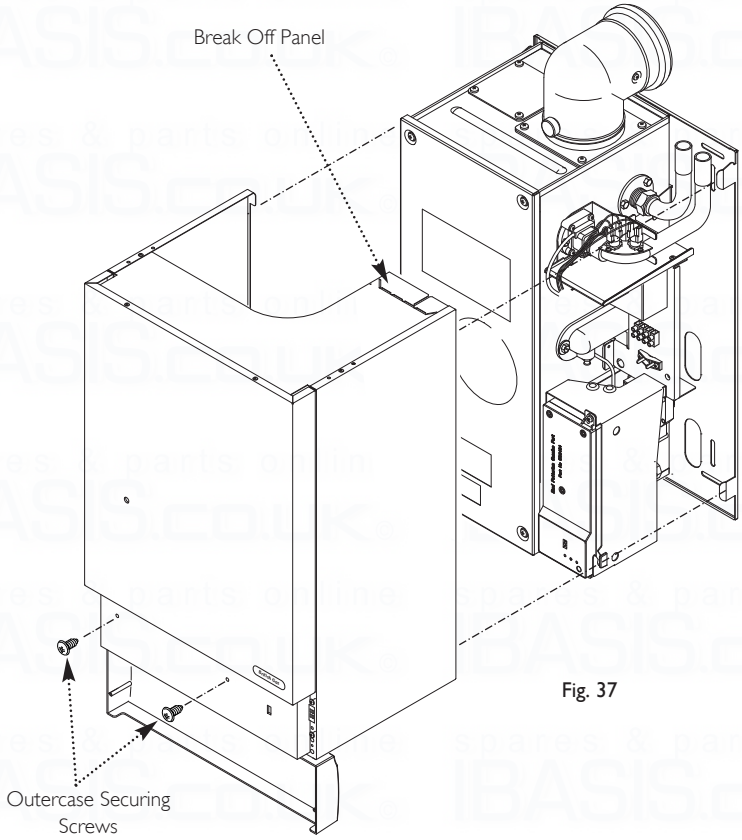

Fig. 37

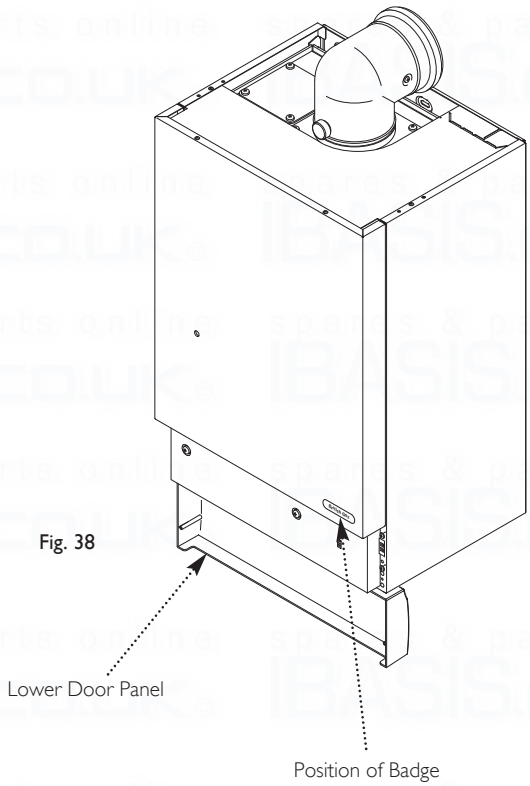

Fig. 38

1. Position the outercase over the boiler engaging the lugs in the side flanges over the hooks on the wall plate. Break off top or bottom panel as required to accommodate pipework runs (Fig.37).

2. Using the two screws supplied in the kit, secure the outercase to the combustion box (Fig. 37).

3. Hinge up the lower door panel (Fig. 38).

4. Carefully read and complete all sections of the Benchmark Commissioning Checklist at the rear of this publication that are relevant to the appliance and installation. These details may be required in the event of any warranty work. The publication must be handed to the user for safe keeping and each subsequent regular service visit recorded.

For IE, it is necessary to complete a "Declaration of Conformity" to indicate compliance to I.S. 813. An example of this is given in I.S. 813 "Domestic Gas Installations". This is in addition to the Benchmark Commissioning Checklist.

5. Instruct the user in the operation of the boiler controls. Hand over the User's Operating, Installation and Servicing Instructions, giving advice on the necessity of regular servicing.

6. Demonstrate to the user the action required if a gas leak occurs or is suspected. Show them how to turn off the gas supply at the meter control, and advise them not to operate electric light or power switched, and to ventilate the property.

7. Show the user the location of the system control isolation switch, and demonstrate its operation.

8. Advise the user that they may observe a plume of vapour from the flue terminal, and that it is part of the normal operation of the boiler.

9. Details of system inhibitor treatment must be recorded in the Benchmark Commissioning Checklist.

10. Select the appropriate self-adhesive badge ('British Gas' or 'Scottish Gas') from the fittings kit and apply to the recess in the outercase panel.

14.0 Servicing the Boiler

14.1 Annual Servicing

1. For reasons of safety and economy, it is recommended that the boiler is serviced annually. Servicing must be performed by a competent person in accordance with B.S. 7967-4.

2. After servicing, complete the relevant Service Interval Record section of the Benchmark Commissioning Checklist at the rear of this publication.

IMPORTANT: During routine servicing, and after any maintenance or change of part of the combustion circuit, the following must be checked:-
- The integrity of the complete flue system and the flue seals.
- The integrity of the boiler combustion circuit and relevant seals as described in Section 14.2.
- The operational gas inlet pressure as described in Section 12.2.1 to 12.2.3 and the gas rate as described in 12.2.4.
- The combustion performance as described in **'Check the Combustion Performance'** (14.1.4 to 14.1.6 below).

3. **Competence to carry out Checking Combustion Performance**
B.S. 6798 'Specification for Installation & Maintenance of Gas Fired Boilers not exceeding 70kW' advises that:-

- The person carrying out a combustion measurement should have been assessed as competent in the use of a flue gas analyser and the interpretation of the results.

- The flue gas analyser used should be one meeting the requirements of BS7927 or BS-EN50379-3 and be calibrated in accordance with the analyser manufacturers' requirements.

- Competence can be demonstrated by satisfactory completion of the CPA1 ACS assessment, which covers the use of electronic portable combustion gas analysers in accordance with BS 7967, Parts 1 to 4.

Check the Combustion Performance (CO/CO_2 ratio)
4. Set the boiler to operate at maximum rate as described in Section 12.2.

5. Remove the cap from the flue sampling point, insert the analyser probe and obtain the CO/CO_2 ratio. **This must be less than 0.004**.

6. If the combustion reading (CO/CO_2 ratio) is greater than this, and the integrity of the complete flue system and combustion circuit seals has been verified, and the inlet gas pressure and gas rate are satisfactory either:
- Perform the 'Annual Servicing - Inspection' (Section 14.2) & re-check.
- Replace the gas valve (Section 15.8) & re-check.

14.2 Annual Servicing - Inspection

1. Ensure that the boiler is cool.

2. The boiler cannot be switched off at the boiler, therefore it is important to isolate the electrical supply at the mains fuse.

3. Hazardous materials are not used in the construction of these products, however reasonable care during service is recommended.

4. When replacing the combustion box door after servicing it is essential that the retaining screws are tightened fully.

5. **Ensure that both the gas and electrical supplies to the boiler are isolated.**

6. Remove the outercase and lower door panel (see Fitting the Outercase, Section 13.0).

WARNING: The PCB Control and Fan Assembly are 325 Vdc. Isolate at supply before access.

7. Release the four 1/4 turn screws securing the air box door panel and remove the door (Fig. 39).

8. Disconnect the leads from the centre and right hand terminals (earth and flame sensing probe) (Fig. 40). Reconnect in reverse order.

9. Undo the four screws securing the combustion box door and remove the door (Fig. 41).

10. Visually check for debris/damage and clean or replace if necessary the following:

a) Burner.
b) Heat exchanger fins.
c) Fan compartment (Check also for condensate leaks).
d) Insulation.
e) Door seals-**Important:** Pay particular attention to the condition of the combustion box door seals.
f) Electrodes.
g) The condensate trap
NOTE: Remove the trap drain plug and place a vessel underneath to catch the condensate (care should be taken as this could be hot). Clean the trap and refit the drain plug. Check for leaks.
h) Top of heat exchanger.

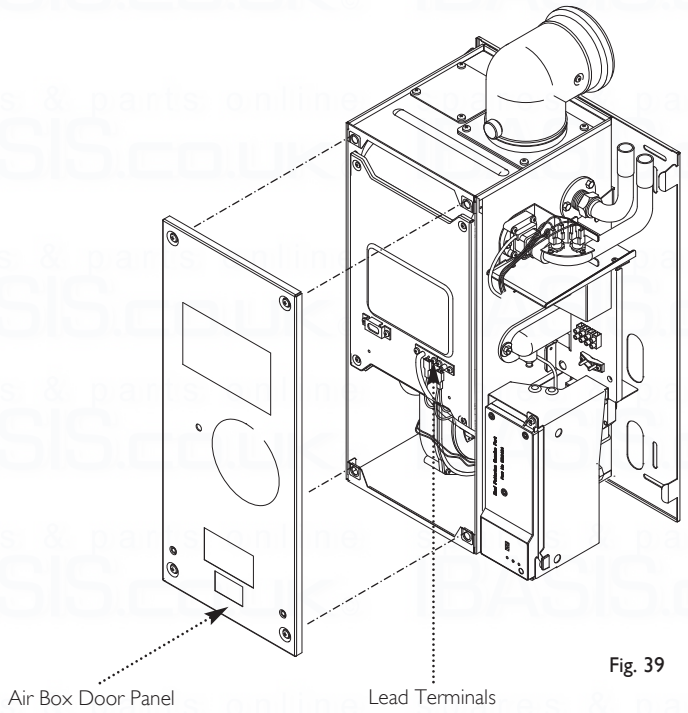

Fig. 39

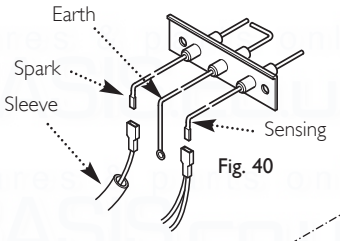

Fig. 40

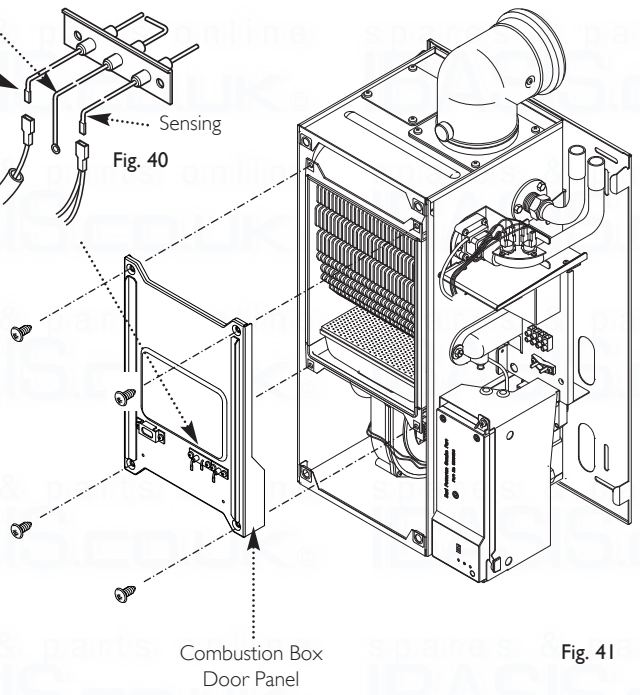

Fig. 41

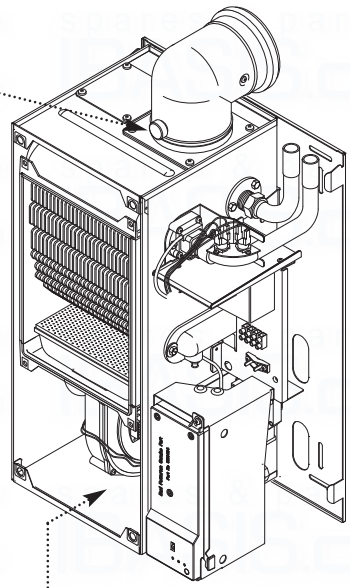

Fig. 41a

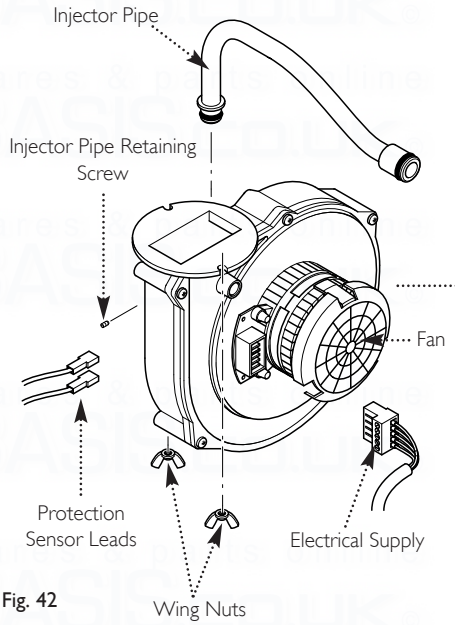

Fig. 42

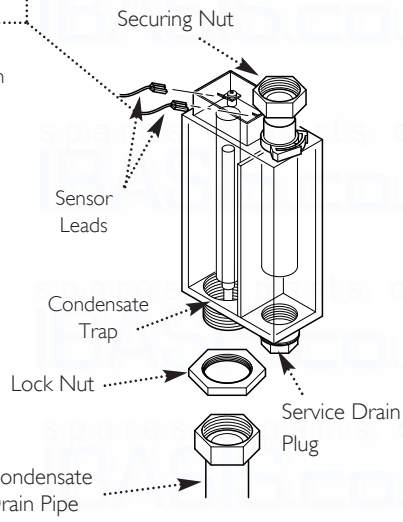

Fig. 43

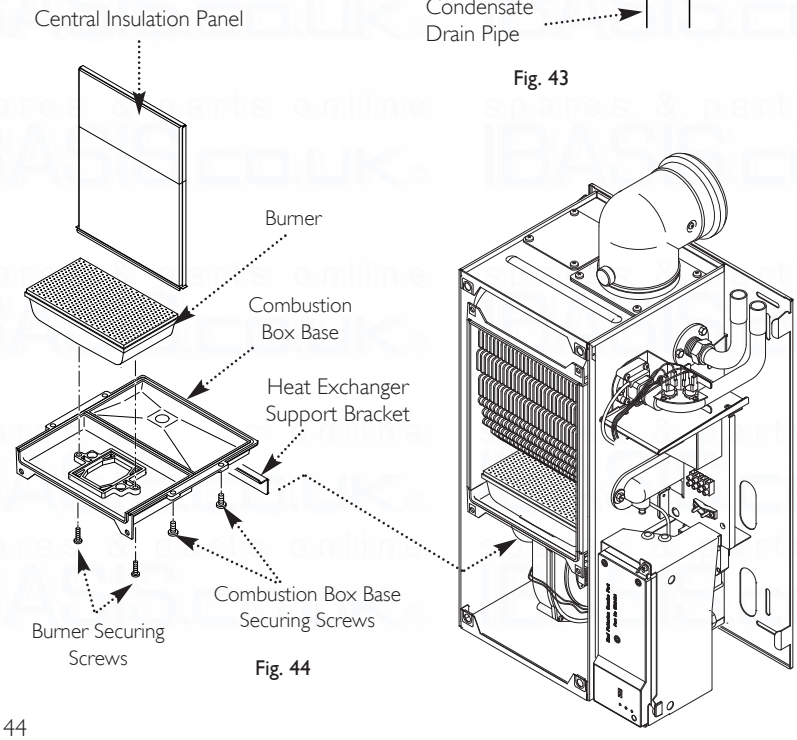

Fig. 44

14.1 Annual Servicing - Inspection (Cont)

11. To clean the heat exchanger and burner proceed as follows:

a) Disconnect the electrical leads to the fan component protection sensor (Fig. 42).

b) Loosen the screw retaining the gas injector pipe at the venturi (Fig. 42).

c) Undo the two wing nuts to disconnect the fan (Fig. 42).

d) Remove the fan and disconnect the electrical supply to it (Fig. 42).

e) Remove the gas injector pipe from the gas valve (push-fit) (Fig. 42).

f) Undo the condensate trap securing nut, lock nut and the condensate drain pipe. Remove the condensate trap and disconnect the sensor leads (Fig. 43).

g) Remove the two screws securing the burner and remove the burner. Visually inspect the internal burner baffle for obstruction, check seal around baffle for cracks/damage. Clean with a soft brush.

h) Loosen the two screws retaining the heat exchanger support bracket and slide to the left to remove (Fig. 44).

i) Remove the four screws securing the heat exchanger/combustion box base and withdraw the base.

j) Lower the central insulation panel and check condition (Fig. 44). Replace the lower insulation pad if necessary.

k) Ensure the heat exchanger fins are clear of any obstruction.

l) Check condition of all seals. **Important: Pay particular attention to the condition of the combustion box door seals.**

m) Reassemble in reverse order and check for leaks.

12. Check the CO/CO^2 ratio and CO^2 level at the flue sampling point (Fig.41a) is as quoted in Section 4.0, 'Technical Data'.

13. If the ratio or level is greater than that quoted telephone the Technical Enquiries for further advice.

IMPORTANT: No adjustment of the gas valve is permissible.

14. Complete the relevant Service Interval Record section of the Benchmark Commissioning Checklist at the rear of this publication and then hand it back to the user.

15.0 Changing Components

15.1 Changing Components

IMPORTANT: When changing components ensure that both the gas and electrical supplies to the boiler are isolated before any work is started.

"The boiler cannot be switched off at the boiler, therefore it is important to isolate the electrical supply at the mains fuse."

Hazardous materials are not used in the construction of these products, however reasonable care during service is recommended.

When replacing the combustion box door after changing components, it is essential that the retaining screws are tightened fully.

After Changing Components a combustion check should be performed (see Section 15.8.11). This is especially important on gas carrying parts, and those that may affect combustion (e.g. fan).

1. Before changing any components please read Section 1.2 Important Information.

2. Remove the outer case and lower door panel (see "Fitting the Outercase" Section 13.0).

WARNING: The PCB Control and Fan Assembly are 325 Vdc. Isolate at supply before access.

3. Isolate the water circuit and drain the system as necessary. A drain point is located on the heat exchanger manifold at the right hand side of the boiler (Fig. 45) to enable the heat exchanger to be drained.

4. Place a tube on the drain point to drain water away from electrics. Turn anticlockwise to open (Fig. 45).

NOTE: When reassembling always fit new 'O' rings, ensuring their correct location on the spigot. Green "O" rings are used for gas joints and Black "O" rings for water joints. Use Greasil 4000 (Approved Silicone Grease).

5. After changing a component re-commission the boiler where appropriate and check the inhibitor concentration (see Section 6.2 and 12.1).

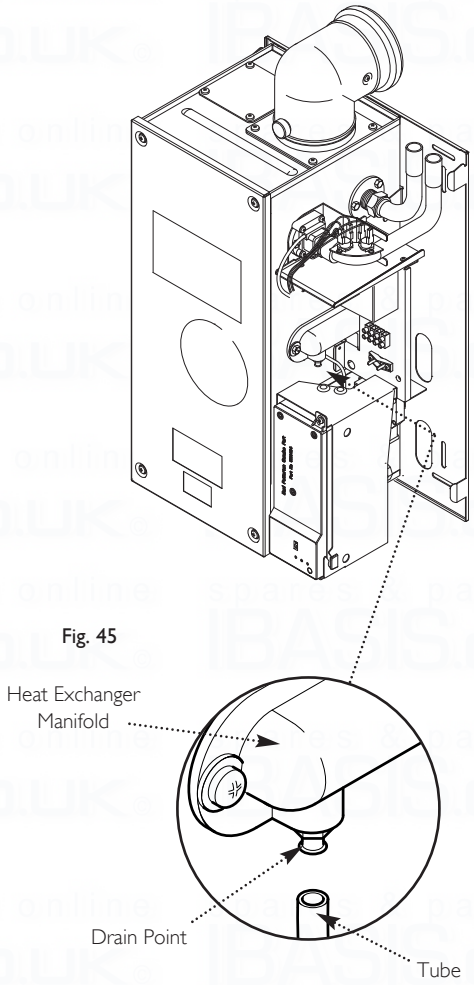

Fig. 45

The thermistor, safety thermostat, interface PCB and the flow switch can be accessed after removal of the outer case.

15.2 Flow Temperature Thermistor and Safety Thermostat (Fig. 46)

1. The procedure is the same for both the thermistor and the safety thermostat.

2. Remove the electrical connections from the sensor.

3. Unscrew the sensor from the pipe.

4. Fit the new thermistor or safety thermostat and reassemble in reverse order.

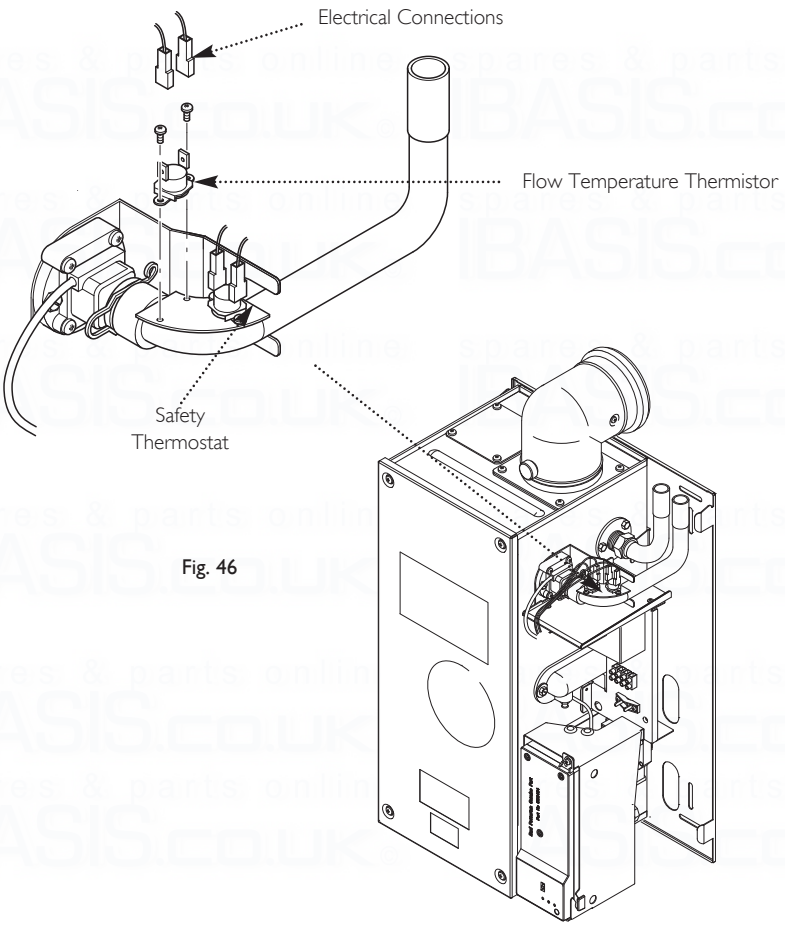

Fig. 46

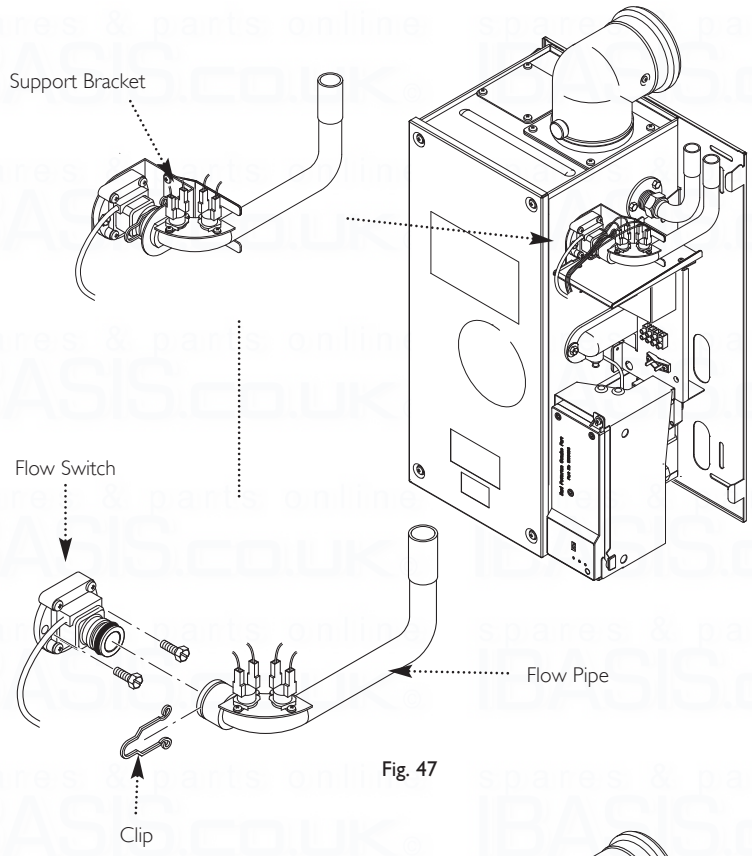

Fig. 47

15.3 Flowswitch (Fig. 47)

1. Drain the boiler (see Section 15.1 paragraph 2 & 3).

2. Remove the two screws on the support bracket.

3. Remove the clip securing the flow pipe to the flowswitch.

4. Disconnect the inline electrical connection.

5. Pull pipe away from flowswitch.

6. Remove the two screws securing the flowswitch to the boiler.

7. Remove the flowswitch.

8. Fit the new flowswitch and reassemble in reverse order.

9. Recommission the boiler and check the inhibitor concentration (see Section 6.2 and 12.1).

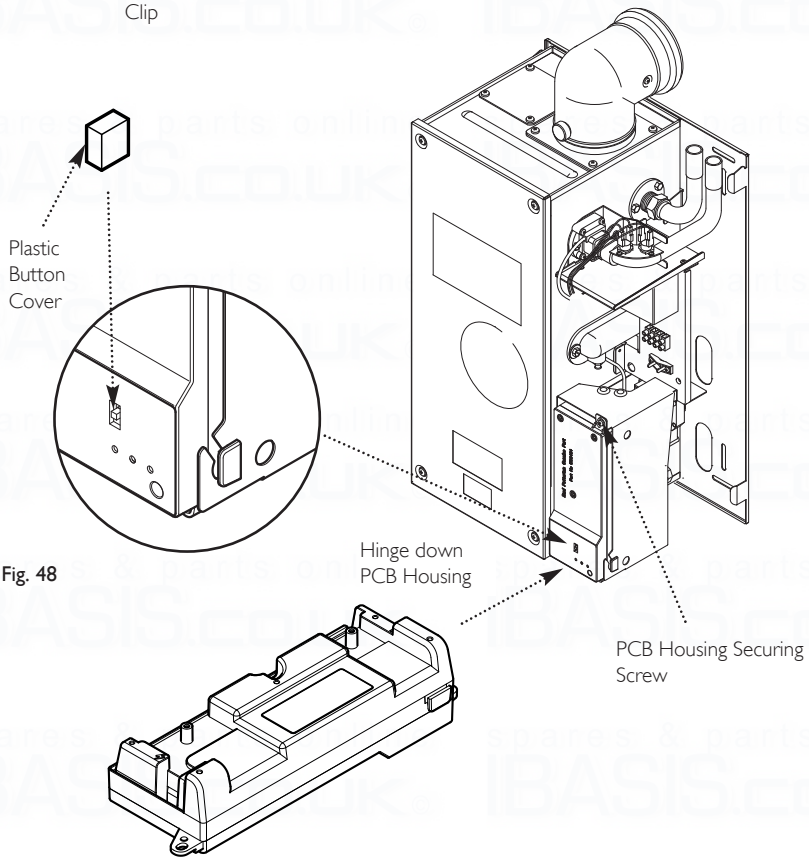

Fig. 48

Fig. 49

15.4 PCB (Figs. 48 & 49)

WARNING: The PCB Control and Fan Assembly are 325 Vdc. Isolate at supply before access.

1. Remove the plastic button cover. Refit them onto the new PCB (Fig. 48).

1. Remove the top right hand securing screw and hinge down the PCB housing and disconnect the electrical connections noting their positions

NOTE: Check the PCB for the presence of input jumpers - see section 10.8. Set the new PCB as the one removed.

2. Lift Control PCB housing out of hinge housing of metal bracket.

3. Fit the new PCB Housing Assembly and reassemble in reverse order.

15.0 Changing Components

The fan and venturi, gas valve, injector pipe, condensate trap, fan protection sensor, spark and sensing electrodes can be accessed and changed on the removal of the airbox door panel.

1. Remove the airbox door panel by loosening the four 1/4 turn screws (Fig. 50).

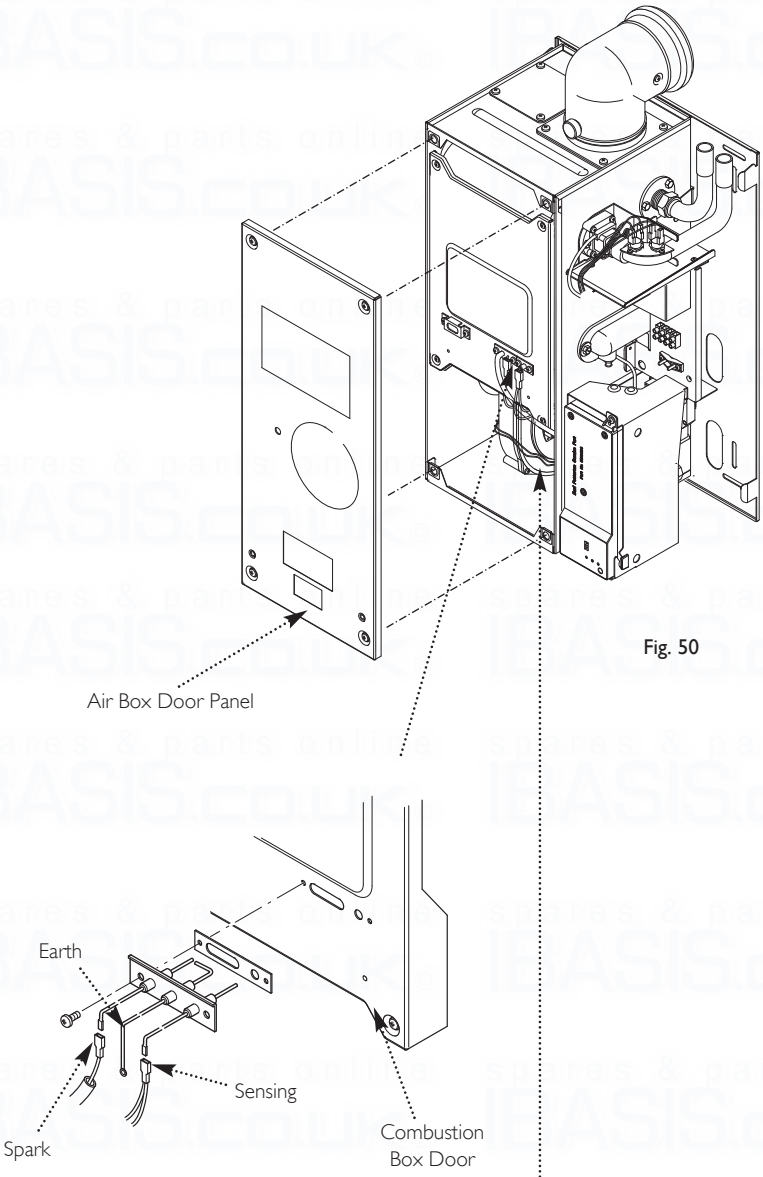

Fig. 50

Fig. 51

15.5 Spark and Sensing Electrodes (Fig. 51)

1. Disconnect all three leads from tabs.

Spark	-	Opaque cable
Earth	-	Green/Yellow cable
Sensing	-	White cable

2. Remove the two screws securing each of the electrodes to the combustion box door and remove the electrodes.

3. Fit the new electrodes (and new gasket, as required) and reassemble in reverse order.

15.6 Fan (Fig. 52)

WARNING: The PCB Control and Fan Assembly are 325 Vdc. Isolate at supply before access.

1. Loosen the screw holding the injector pipe into the venturi.

2. Remove the electrical connections to the fan and protection sensor on the fan.

3. Remove the wing nuts securing the fan to the base of the combustion box.

4. Lower the fan and remove.

5. If changing the fan remove the screws securing the venturi and fan protection sensor bracket, noting the positions of the injector opening and sensor bracket, fix them to the new fan.

6. Fit the new fan and reassemble in reverse order.

The injector pipe, condensate trap and gas valve can be changed after the removal of the fan.

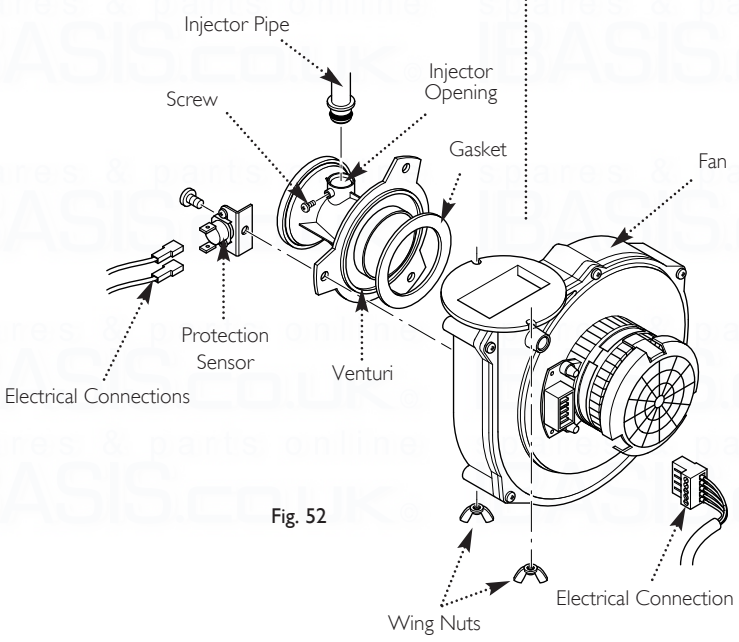

Fig. 52

15.0 Changing Components

The removal of the fan is necessary to enable the changing of the injector pipe, condensate trap and gas valve (see section 15.6).

15.7 Injector Pipe (Fig. 53)

1. Remove the injector pipe by pulling out from the 'O' ring joint in the gas valve.

2. Fit the new injector pipe and reassemble in reverse order.

15.8 Gas Valve (Fig. 53)

1. Remove the Control PCB (see Section 15.4).

2. Isolate gas supply and disconnect the gas tap by removing the four screws.

3. Undo the case pressure pipe from the gas valve.

4. Disconnect the electrical plug from the gas valve.

5. Remove the fan (see section 15.6) and injector pipe.

6. Remove the two gas valve securing screws from inside the air box holding the gas valve.

7. Remove the gas valve from the airbox side.

8. Remove the aluminium spacer and its gasket from the gas valve.

9. Fit the aluminium spacer and gasket to the new valve.

10. Fit the new gas valve and reassemble in reverse order.

NOTE: Check for gas tightness after replacing gas valve.

11. Check the CO/CO^2 ratio and CO^2 level at the flue sampling point (Fig.41a) is as quoted in Section 4.0, 'Technical Data'.

12. If the ratio or level is greater than that quoted, telephone the Technical Enquiries for further advice.

IMPORTANT: No adjustment of the gas valve is permissible.

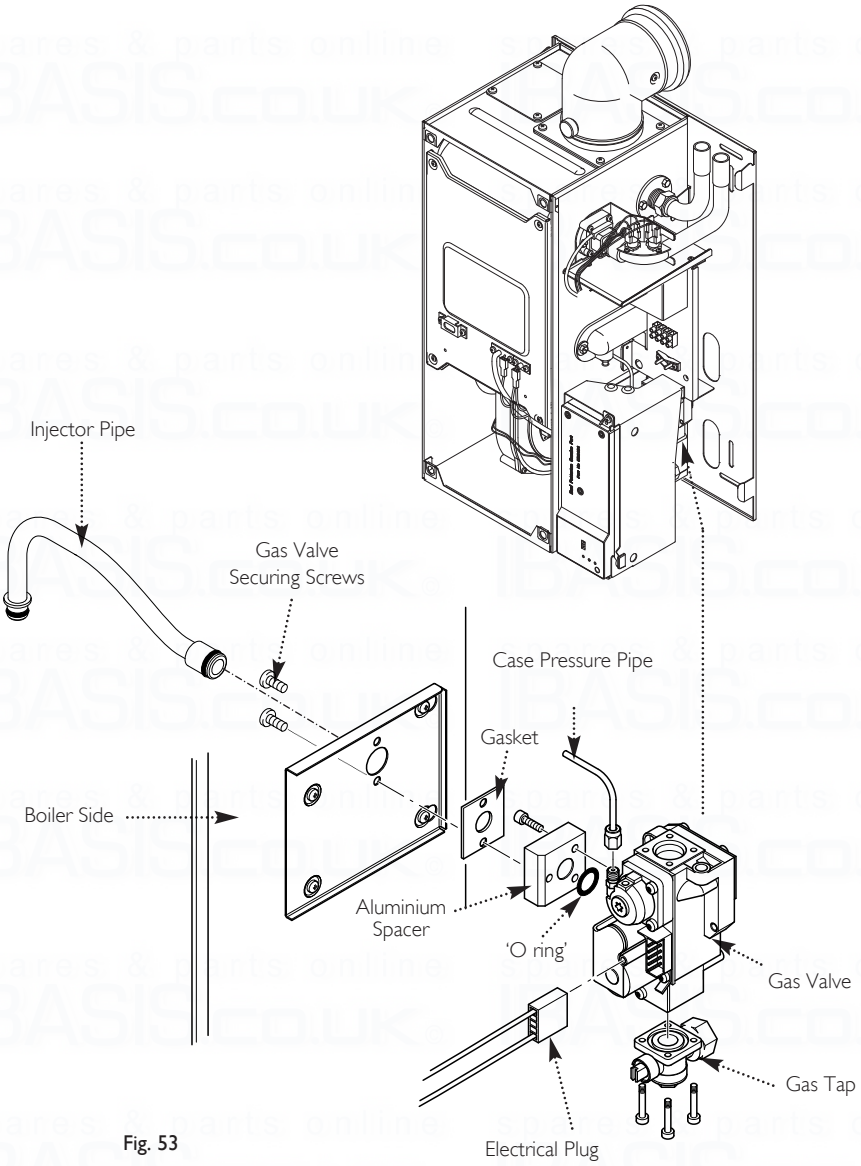

Fig. 53

15.9 Condensate Trap (Fig. 54)

1. Disconnect the condensate trap from the base of the heat exchanger.

2. Disconnect the condensate drain (outside the boiler) from the condensate trap.

3. Undo the condensate trap lock nut and remove the trap from the boiler. Disconnect the sensor leads.

4. Fit the new condensate trap and reassemble in reverse order.

5. Prime the condensate trap (fill first chamber), check for leaks.

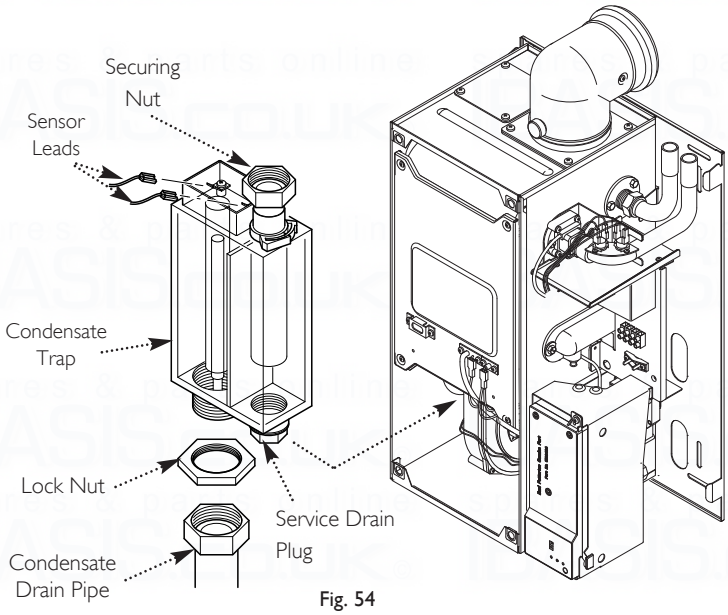

Fig. 54

15.0 Changing Components

The burner and heat exchanger can be changed after removal of the combustion box door. To change the heat exchanger, the fan and burner must be removed first (see section 15.6 and 15.10).

1. Remove the combustion box door by removing the four securing screws (Fig. 55).

> IMPORTANT: On refitting the combustion box door check the condition of the combustion box door seals.

15.10 Burner (Fig. 56)

1. Remove the two screws securing the burner to the base of the combustion box.

2. Remove the burner carefully from the combustion box base.

3. Check the burner seal on the heat exchanger base, replace if necessary. Fit the new burner and reassemble in reverse order.

15.11 Heat Exchanger

1. Drain the boiler (see section 15.1 paragraph 2 & 3).

2. Remove all components in the base of the airbox.

3. Undo the screws on the support bracket. Remove the screws securing the flow switch and return connections and remove the connections (Fig. 57).

4. Remove the screws securing the heat exchanger manifold and remove the manifold (Fig. 58).

5. Lift the heat exchanger assembly (Fig. 59) and rotate the bottom upwards whilst pulling it forwards out of the airbox.

6. Fit the new heat exchanger and reassemble in reverse order.

7. Recommission the boiler and check the inhibitor concentration (see Section 6.2 and 12.1).

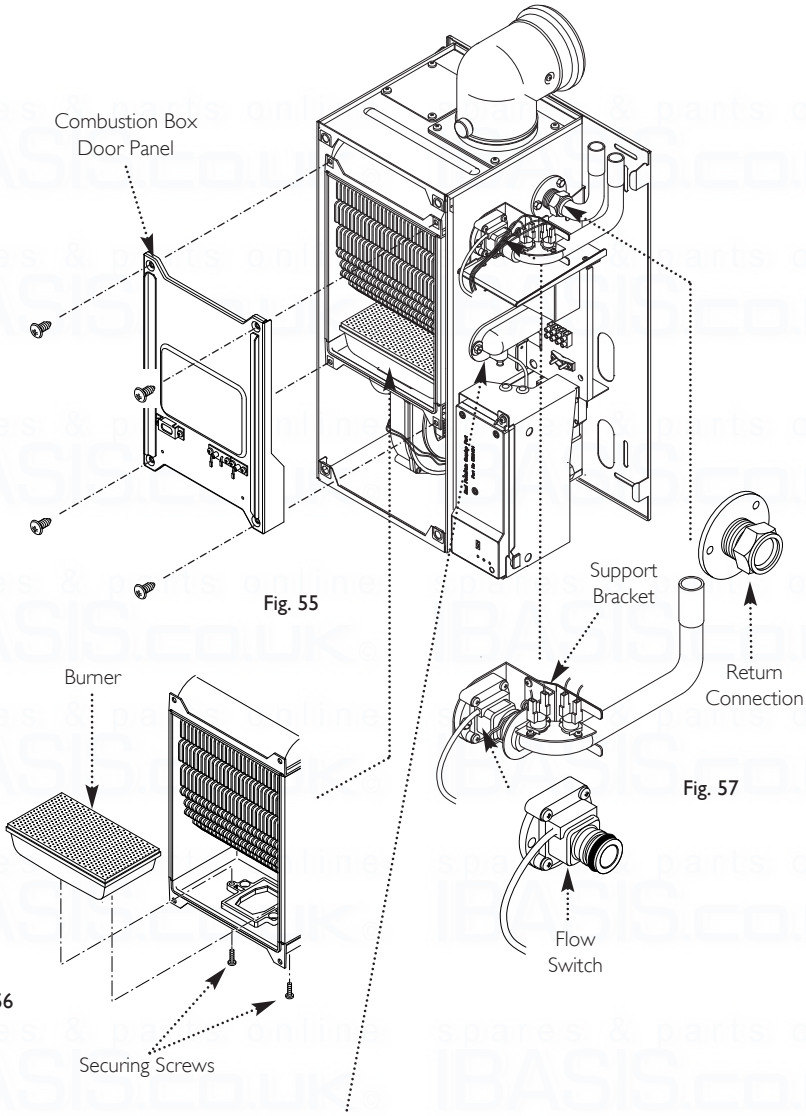

Fig. 55

Fig. 56

Fig. 57

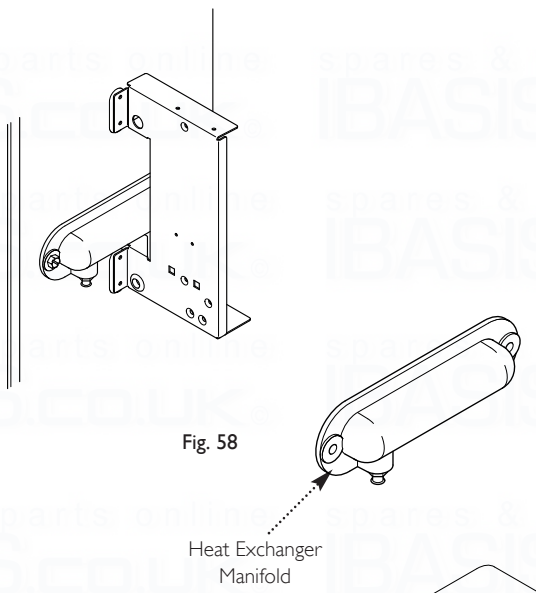

Fig. 58

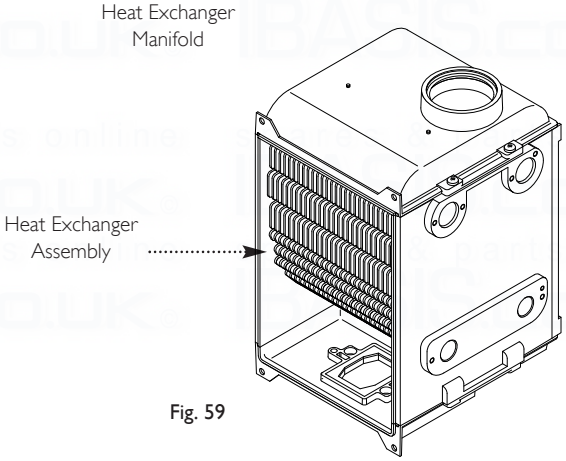

Fig. 59

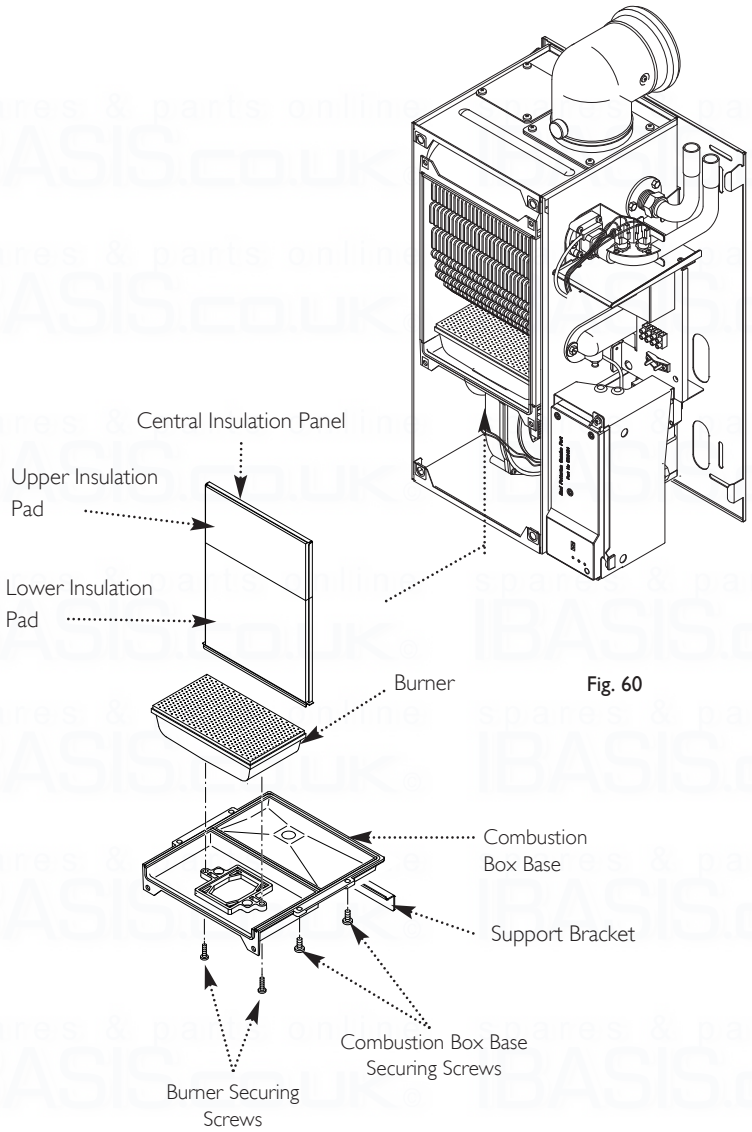

Fig. 60

Fig. 61

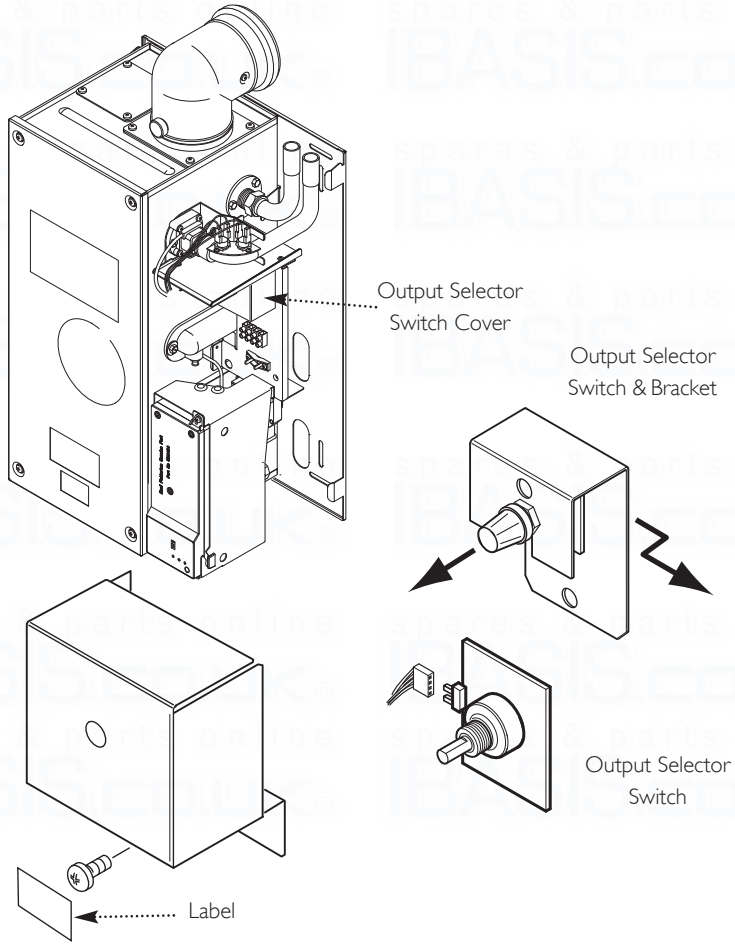

15.0 Changing Components

15.12 Heat Exchanger Lower Insulation Pad (Fig. 60)

1. Remove all components in the base of the airbox.

2. Remove the burner (see section 15.10).

3. Remove the four bolts securing the combustion box base. Remove the combustion box base.

4. Pull the central insulation panel down from the centre of the heat exchanger and remove the lower insulation pad.

5. Fit the new insulation pad and reassemble in reverse order.

15.13 Heat Exchanger Upper Insulation Pad (Fig. 60)

1. Remove all components in the base of the airbox.

2. Remove the burner (see section 15.10).

3. Remove the heat exchanger (see section 15.11).

4. Remove the four bolts securing the combustion box base. Remove the combustion box base.

5. Pull the central insulation panel down from the centre of the heat exchanger.

6. Fit the new insulation pad and reassemble in reverse order.

15.14 Output Rotary Selector Switch (Fig. 61)

1. Ensure that the electrical supply to the boiler is isolated and undo the screw securing the Output Selector Switch Cover.

2. Note the position of the control knob. Pull the knob off the Selector Switch. Ease the bracket to the right and forwards, disengaging the keyhole slot from the locating screw.

3. Slacken the locknut holding the Output Selector Switch to the mounting bracket, remove the Switch and disconnect the electrical plug.

4. Take the new Output Selector Switch, connect the electrical plug and locate on the mounting bracket.

5. Secure the new Selector Switch with the locknut and refit the knob. Engage the keyhole slot in the bracket over the screw on the boiler.

6. Turn the knob to the position previously noted and refit the cover. Apply the label supplied in the kit over the screw.

16.0 Short Parts List

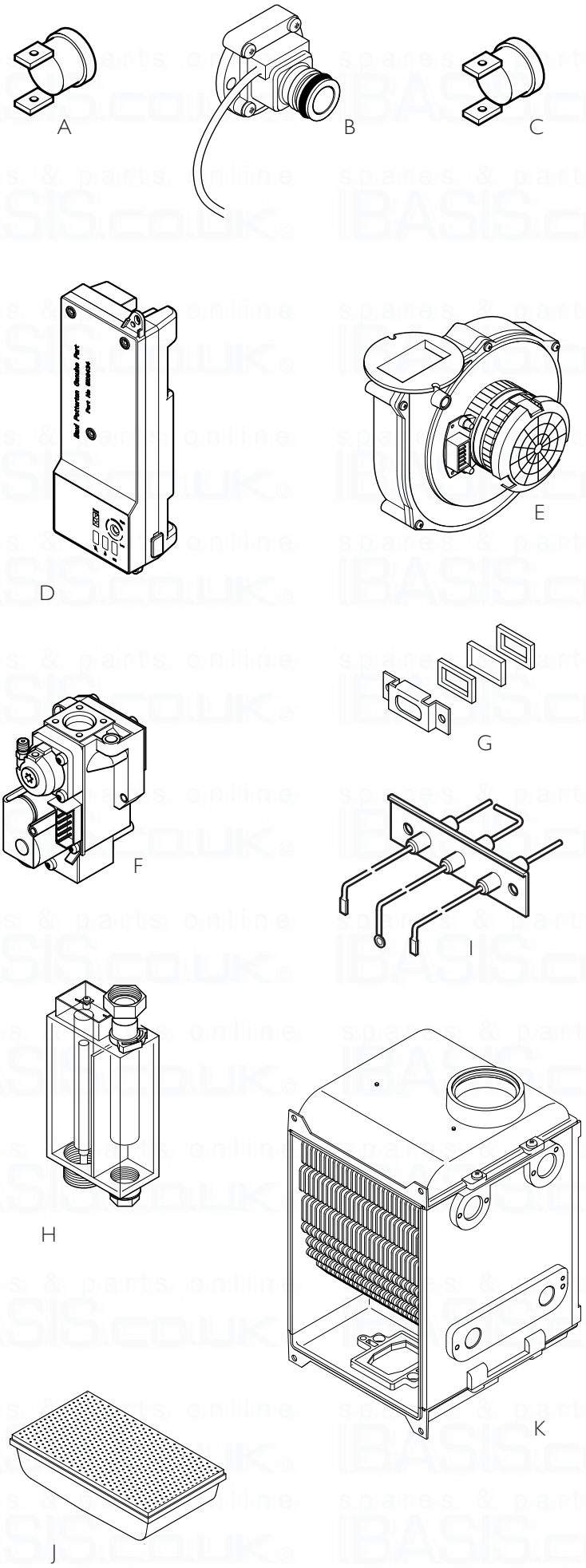

Short Parts List

Key No.	G.C. No.	Description	Manufacturers Part No.
A	E06 058	Flow Temperature Thermistor (Red)	240670
B	E06 059	Flow Switch	242459
C	E06 060	Safety Thermostat (Black)	242235
D		PCB	5129147
E		Fan	5109925
F		Gas Valve	241900
G	E06 085	Viewing Window	242484
H		Condensate Trap	5111714
I		Electrodes Kit	5132097
J		Burner Assy	5107430
K	E06 097	Heat Exchanger Assy	242497

spares & parts online IBASIS.CO.UK

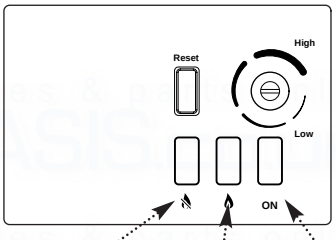

Lockout LED Light (Red)

Boiler On LED Light (Green)

Mains On LED Light (Green)

17.0 Fault Finding

NOTE: The fan is supplied with 325 Vdc.

Fan Fault Finding should only be carried out after the boiler has been electrically isolated.

General Fault Finding should only be carried out by someone who is appropriately qualified.

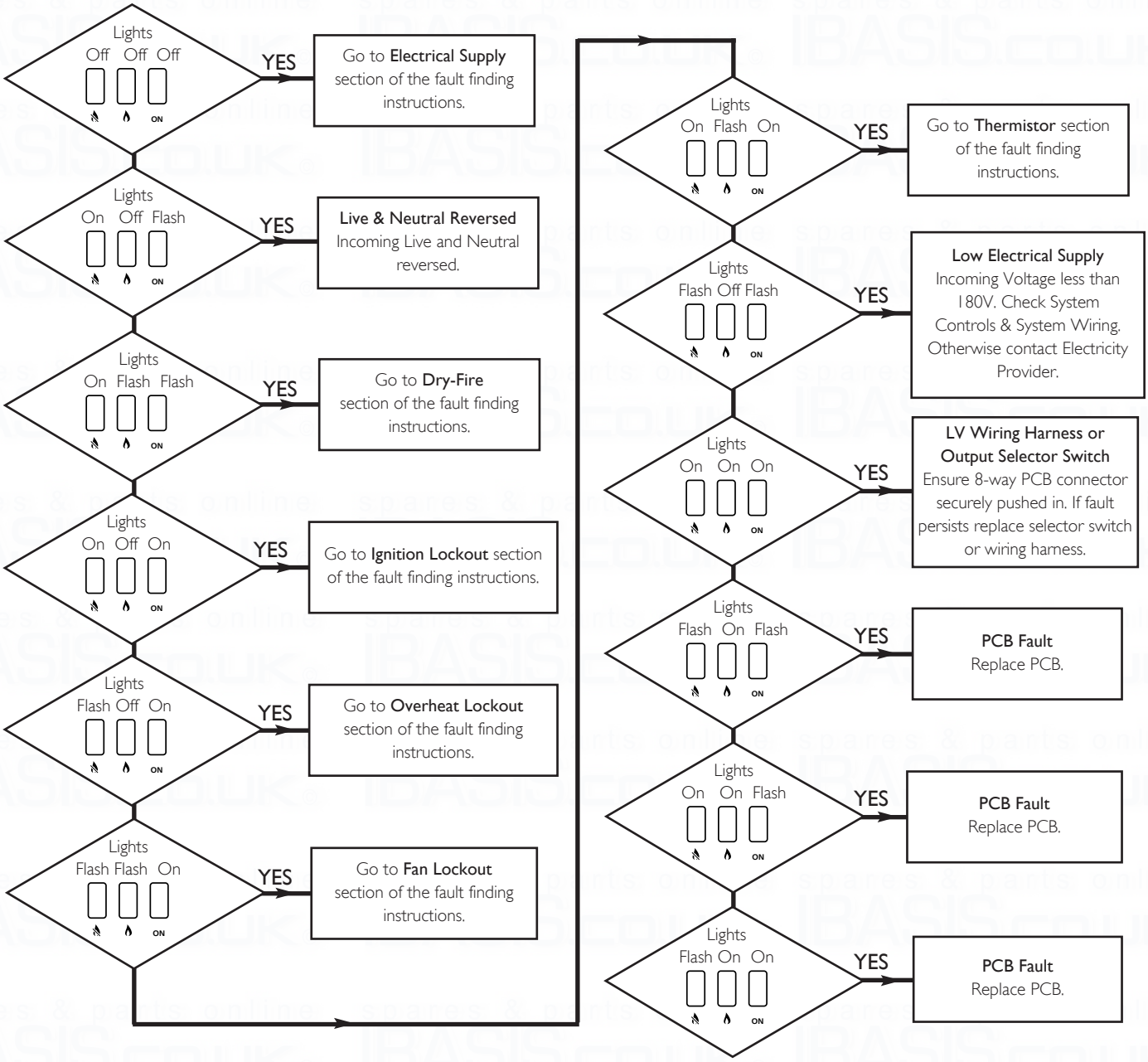

ELECTRICAL SUPPLY

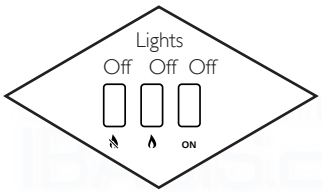

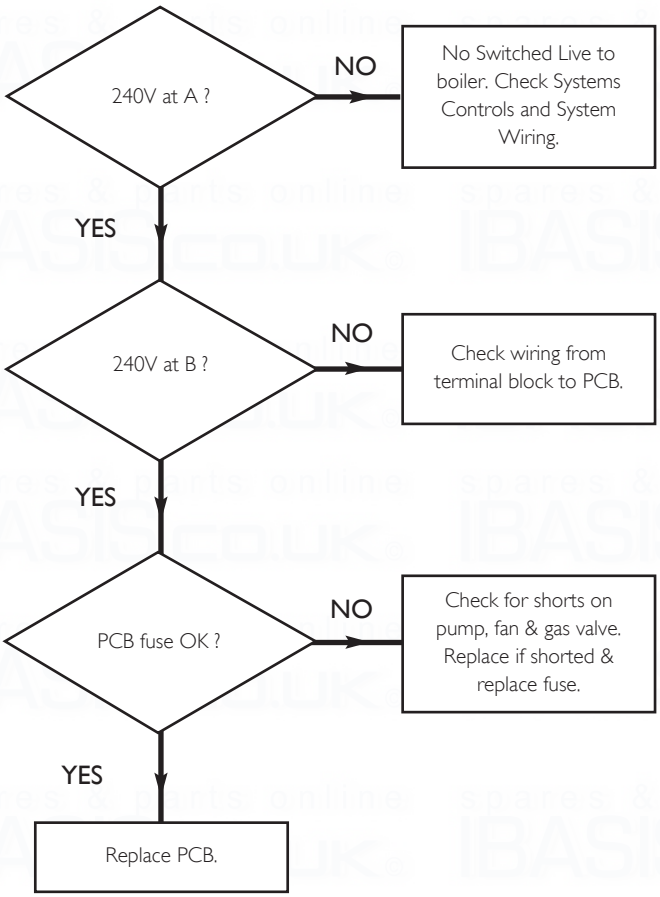

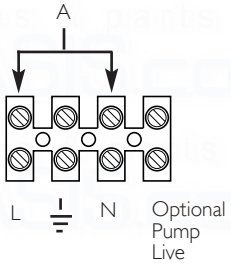

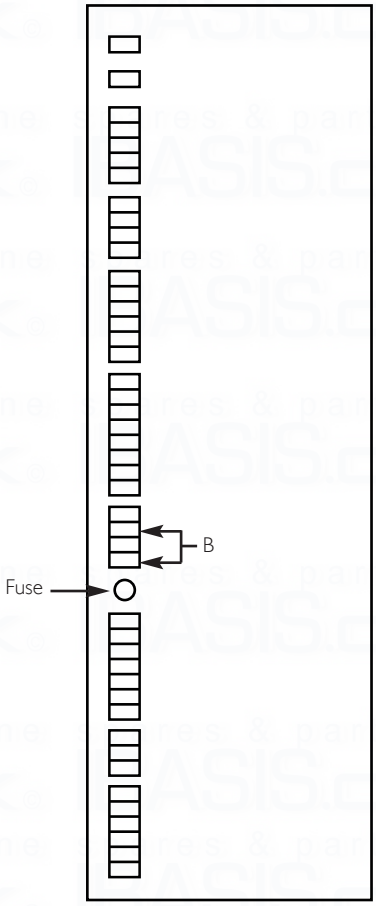

IBASIS.CO.UK spares & parts online

17.0 Fault Finding

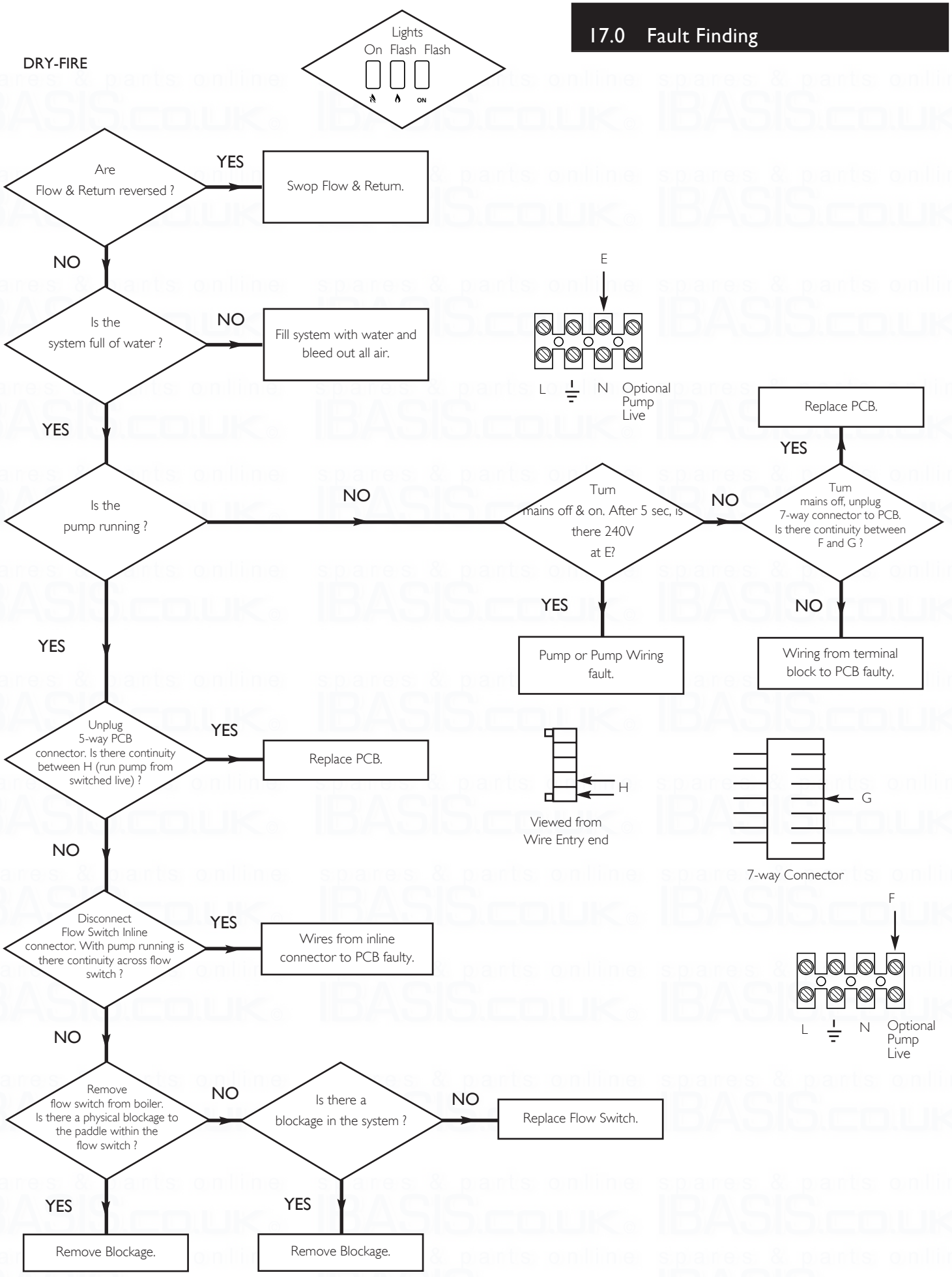

IGNITION LOCKOUT

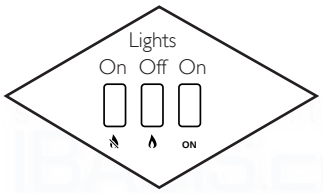

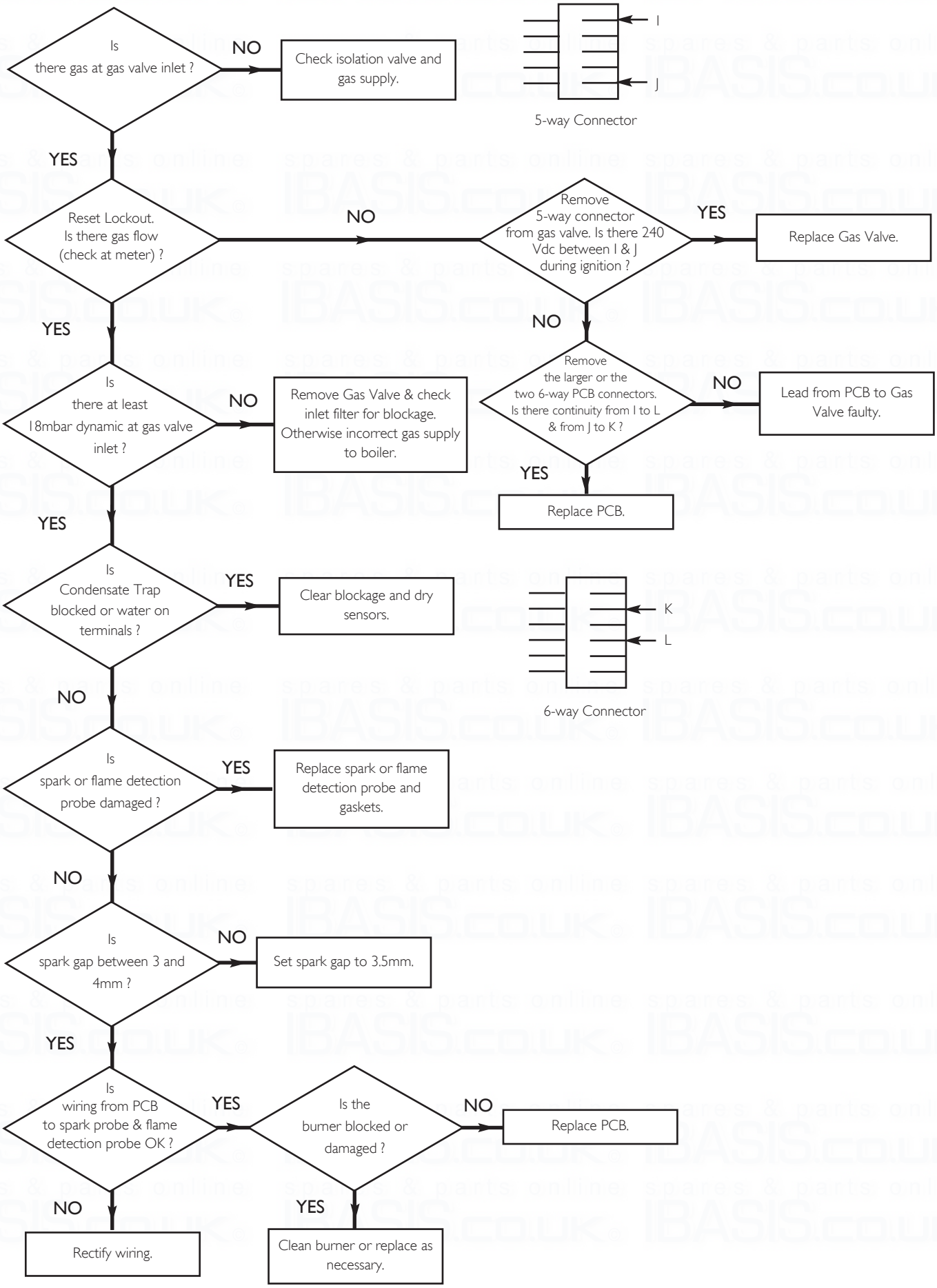

OVERHEAT LOCKOUT

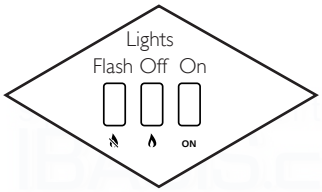

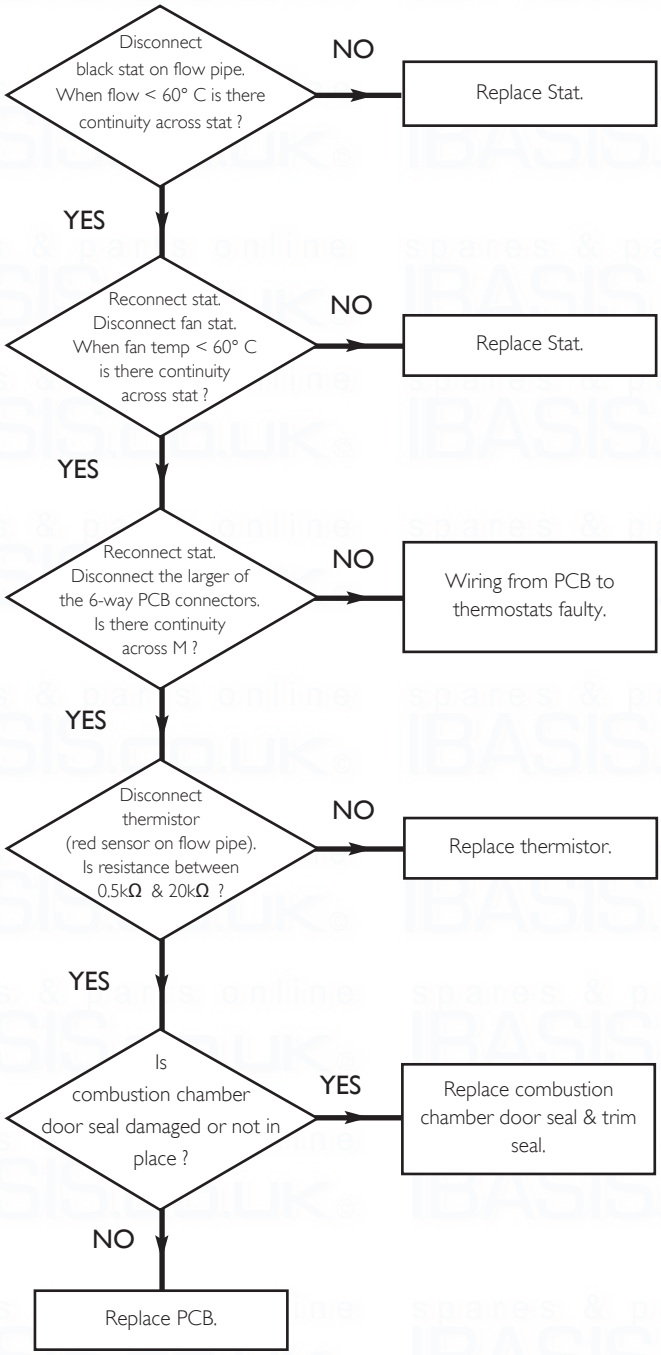

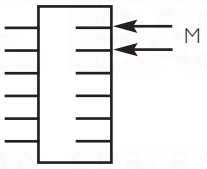

6-way Connector

17.0 Fault Finding

NOTE: The fan is supplied with 325 Vdc.

Fan Fault Finding should only be carried out after the boiler has been electrically isolated.

FAN LOCKOUT

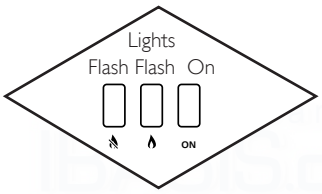

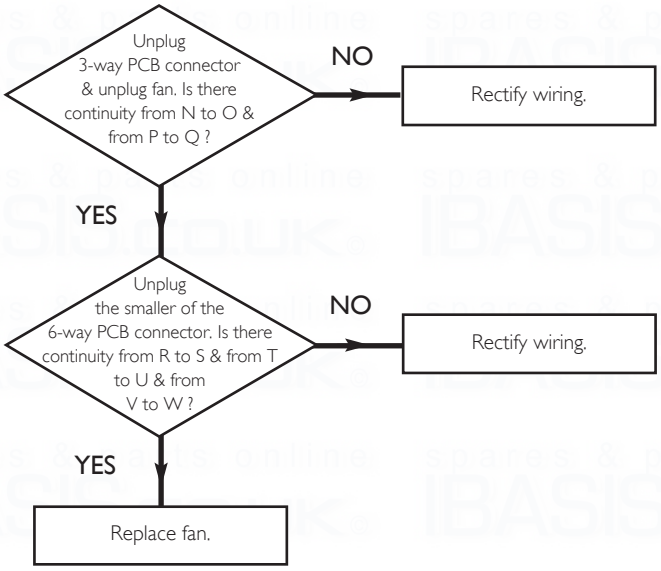

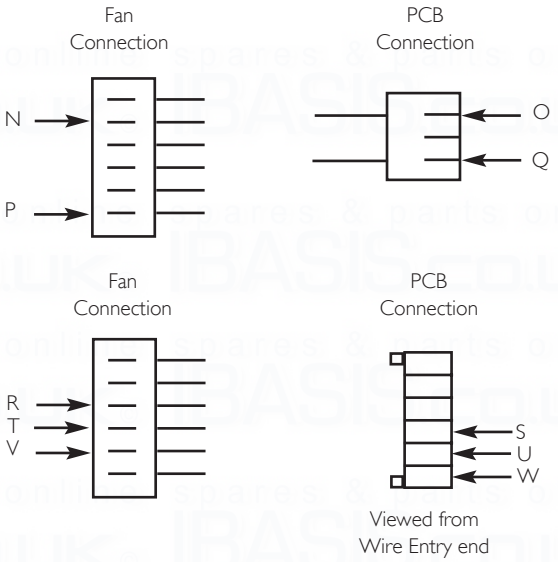

THERMISTOR

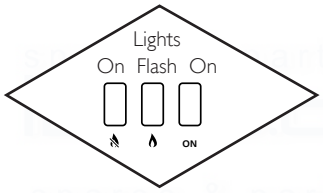

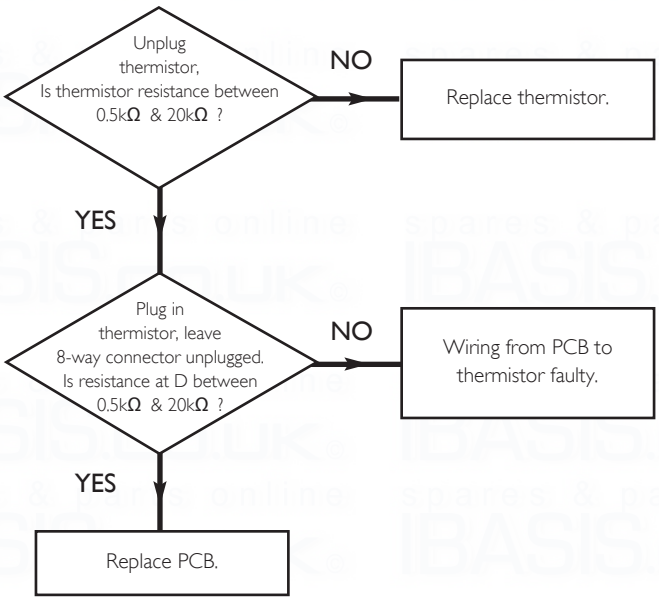

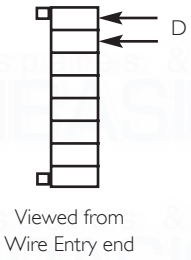

GAS BOILER SYSTEM COMMISSIONING CHECKLIST

This Commissioning Checklist is to be completed in full by the competent person who commissioned the boiler as a means of demonstrating compliance with the appropriate Building Regulations and then handed to the customer to keep for future reference.

Failure to install and commission according to the manufacturer's instructions and complete this Benchmark Commissioning Checklist will invalidate the warranty. This does not affect the customer's statutory rights.

Customer name:	Telephone number:
Address:	
Boiler make and model:	
Boiler serial number:	
Commissioned by (PRINT NAME):	Gas Safe register number:
Company name:	Telephone number:
Company address:	
	Commissioning date:
To be completed by the customer on receipt of a Building Regulations Compliance Certificate*	
Building Regulations Notification Number (if applicable):	

CONTROLS (tick the appropriate boxes)				
Time and temperature control to heating	Room thermostat and programmer/timer		Programmable room thermostat	
	Load/weather compensation		Optimum start control	
Time and temperature control to hot water	Cylinder thermostat and programmer/timer		Combination Boiler	
Heating zone valves	Fitted		Not required	
Hot water zone valves	Fitted		Not required	
Thermostatic radiator valves	Fitted		Not required	
Automatic bypass to system	Fitted		Not required	
Boiler interlock			Provided	

ALL SYSTEMS				
The system has been flushed and cleaned in accordance with BS7593 and boiler manufacturer's instructions			Yes	
What system cleaner was used?				
What inhibitor was used?		Quantity		litres
Has a primary water system filter been installed?	Yes		No	

CENTRAL HEATING MODE measure and record:			
Gas rate	m³/hr	**OR**	ft³/hr
Burner operating pressure (if applicable)	mbar	**OR** Gas inlet pressure	mbar
Central heating flow temperature			°C
Central heating return temperature			°C

COMBINATION BOILERS ONLY				
Is the installation in a hard water area (above 200ppm)?	Yes		No	
If yes, and if required by the manufacturer, has a water scale reducer been fitted?	Yes		No	
What type of scale reducer has been fitted?				
DOMESTIC HOT WATER MODE Measure and Record:				
Gas rate	m³/hr	**OR**	ft³/hr	
Burner operating pressure (at maximum rate)	mbar	**OR** Gas inlet pressure at maximum rate	mbar	
Cold water inlet temperature			°C	
Hot water has been checked at all outlets	Yes		Temperature	°C
Water flow rate			l/min	

CONDENSING BOILERS ONLY		
The condensate drain has been installed in accordance with the manufacturer's instructions and/or BS5546/BS6798	Yes	

ALL INSTALLATIONS							
Record the following:	At max. rate:	CO	ppm	**AND**	CO/CO_2	Ratio	
	At min. rate: (where possible)	CO	ppm	**AND**	CO/CO_2	Ratio	
The heating and hot water system complies with the appropriate Building Regulations						Yes	
The boiler and associated products have been installed and commissioned in accordance with the manufacturer's instructions						Yes	
The operation of the boiler and system controls have been demonstrated to and understood by the customer						Yes	
The manufacturer's literature, including Benchmark Checklist and Service Record, has been explained and left with the customer						Yes	

Commissioning Engineer's Signature
Customer's Signature
(To confirm satisfactory demonstration and receipt of manufacturer's literature)

*All installations in England and Wales must be notified to Local Authority Building Control (LABC) either directly or through a Competent Persons Scheme. A Building Regulations Compliance Certificate will then be issued to the customer.

benchmark COLLECTIVE MARK
THE MARK OF QUALITY FOR THE INSTALLATION, COMMISSIONING AND SERVICING OF DOMESTIC HEATING AND HOT WATER SYSTEMS

© Heating and Hotwater Industry Council (HHIC)

SERVICE RECORD

It is recommended that your heating system is serviced regularly and that the appropriate Service Interval Record is completed.

Service Provider

Before completing the appropriate Service Record below, please ensure you have carried out the service as described in the manufacturer's instructions. Always use the manufacturer's specified spare part when replacing controls.

SERVICE 01					Date:
Engineer name:					
Company name:					
Telephone No:					
Gas safe register No:					
Record:	At max. rate:	CO	ppm	**AND**	CO_2 %
	At min. rate: (Where Possible)	CO	ppm	**AND**	CO_2 %
Comments:					
Signature					

SERVICE 02					Date:
Engineer name:					
Company name:					
Telephone No:					
Gas safe register No:					
Record:	At max. rate:	CO	ppm	**AND**	CO_2 %
	At min. rate: (Where Possible)	CO	ppm	**AND**	CO_2 %
Comments:					
Signature					

SERVICE 03					Date:
Engineer name:					
Company name:					
Telephone No:					
Gas safe register No:					
Record:	At max. rate:	CO	ppm	**AND**	CO_2 %
	At min. rate: (Where Possible)	CO	ppm	**AND**	CO_2 %
Comments:					
Signature					

SERVICE 04					Date:
Engineer name:					
Company name:					
Telephone No:					
Gas safe register No:					
Record:	At max. rate:	CO	ppm	**AND**	CO_2 %
	At min. rate: (Where Possible)	CO	ppm	**AND**	CO_2 %
Comments:					
Signature					

SERVICE 05					Date:
Engineer name:					
Company name:					
Telephone No:					
Gas safe register No:					
Record:	At max. rate:	CO	ppm	**AND**	CO_2 %
	At min. rate: (Where Possible)	CO	ppm	**AND**	CO_2 %
Comments:					
Signature					

SERVICE 06					Date:
Engineer name:					
Company name:					
Telephone No:					
Gas safe register No:					
Record:	At max. rate:	CO	ppm	**AND**	CO_2 %
	At min. rate: (Where Possible)	CO	ppm	**AND**	CO_2 %
Comments:					
Signature					

SERVICE 07					Date:
Engineer name:					
Company name:					
Telephone No:					
Gas safe register No:					
Record:	At max. rate:	CO	ppm	**AND**	CO_2 %
	At min. rate: (Where Possible)	CO	ppm	**AND**	CO_2 %
Comments:					
Signature					

SERVICE 08					Date:
Engineer name:					
Company name:					
Telephone No:					
Gas safe register No:					
Record:	At max. rate:	CO	ppm	**AND**	CO_2 %
	At min. rate: (Where Possible)	CO	ppm	**AND**	CO_2 %
Comments:					
Signature					

SERVICE 09					Date:
Engineer name:					
Company name:					
Telephone No:					
Gas safe register No:					
Record:	At max. rate:	CO	ppm	**AND**	CO_2 %
	At min. rate: (Where Possible)	CO	ppm	**AND**	CO_2 %
Comments:					
Signature					

SERVICE 10					Date:
Engineer name:					
Company name:					
Telephone No:					
Gas safe register No:					
Record:	At max. rate:	CO	ppm	**AND**	CO_2 %
	At min. rate: (Where Possible)	CO	ppm	**AND**	CO_2 %
Comments:					
Signature					

*All installations in England and Wales must be notified to Local Authority Building Control (LABC) either directly or through a Competent Persons Scheme. A Building Regulations Compliance Certificate will then be issued to the customer.

benchmark COLLECTIVE MARK
THE MARK OF QUALITY FOR THE INSTALLATION, COMMISSIONING AND SERVICING OF DOMESTIC HEATING AND HOT WATER SYSTEMS

© Heating and Hotwater Industry Council (HHIC)

All descriptions and illustrations provided in this leaflet have been carefully prepared but we reserve the right to make changes and improvements in our products which may affect the accuracy of the information contained in this leaflet. All goods are sold subject to our standard Conditions of Sale which are available on request.

Manufactured by Potterton exclusively for British Gas
A Trading Division of Baxi Heating UK Ltd (3879156)
Brooks House, Coventry Road, Warwick. CV34 4LL
e&oe