United Kingdom
en

POTTERTON

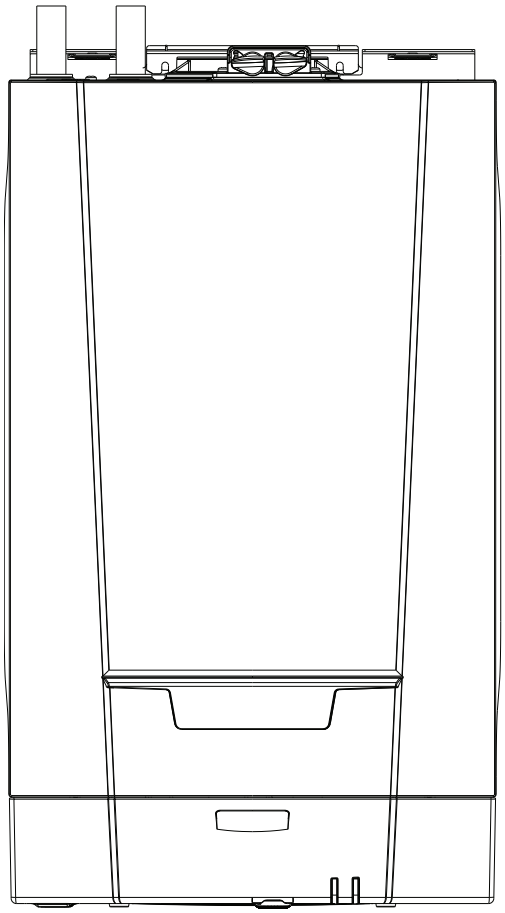

Installation and Service Manual

Condensing Central Heating Boiler

Titanium Heat

12 - 15 - 18 - 24 - 30

These instructions include the Benchmark Commissioning Checklist and should be left with the user for safe keeping. They must be read in conjunction with the Flue Installation Guide.

Model Range

Potterton Titanium 12 Heat
G.C.Nº 41-592-61
Potterton Titanium 15 Heat
G.C.Nº 41-592-62
Potterton Titanium 18 Heat
G.C.Nº 41-592-63
Potterton Titanium 24 Heat
G.C.Nº 41-592-64
Potterton Titanium 30 Heat
G.C.Nº 41-592-65

CE 0086

ISO 9001
FM 00866

Building Regulations and the Benchmark Commissioning Checklist

Building Regulations (England & Wales) require notification of the installation of a heating appliance to the relevant Local Authority Building Control Department. This can be achieved via a Competent Persons Self Certification Scheme as an option to notifying the Local Authority directly.

The Health & Safety Executive operates the 'Gas Safe Register', a self-certification scheme for gas heating appliances.

This company is a member of the Benchmark initiative and fully supports the aims of the programme. Its aim is to improve the standards of installation and commissioning of central heating systems in the UK and to encourage the regular servicing of all central heating systems to ensure safety and efficiency.

Building Regulations require that installations should comply with manufacturer's instructions. It is therefore important that the commissioning checklist is completed by the installer. The relevant section of Building Regulations only relates to dwellings. Therefore the checklist only applies if the appliance is being installed in a dwelling or some related structure.

The flowchart opposite gives guidance for installers on the process necessary to ensure compliance with Building Regulations.

The Benchmark Scheme

Benchmark places responsibilities on both manufacturers and installers. The purpose is to ensure that customers are provided with the correct equipment for their needs, that it is installed, commissioned and serviced in accordance with the manufacturer's instructions by competent persons and that it meets the requirements of the appropriate Building Regulations. The Benchmark Checklist can be used to demonstrate compliance with Building Regulations and should be provided to the customer for future reference.

Installers are required to carry out installation, commissioning and servicing work in accordance with the Benchmark Code of Practice which is available from the Heating and Hotwater Industry Council who manage and promote the Scheme. Visit **www.centralheating.co.uk** for more information.

© Baxi Heating UK Ltd 2017 All rights reserved. No part of this publication may be reproduced or transmitted in any form or by any means, or stored in any retrieval system of any nature (including in any database), in each case whether electronic, mechanical, recording or otherwise, without the prior written permission of the copyright owner, except for permitted fair dealing under Copyrights, Designs and Patents Act 1988.

Applications for the copyright owner's permission to reproduce or make other use of any part of this publication should be made, giving details of the proposed use, to the following address:

The Company Secretary, Baxi Heating UK Limited, Brooks House, Coventry Road, Warwick. CV34 4LL

Full acknowledgement of author and source must be given.

WARNING: Any person who does any unauthorised act in relation to a copyright work may be liable to criminal prosecution and civil claims for damages.

You have just purchased one of our appliances and we thank you for the trust you have placed in our products. Please note that the product will provide good service for a longer period of time if it is regularly checked and maintained. Our customer support network is at your disposal at all times.

Installer Notification Guidelines

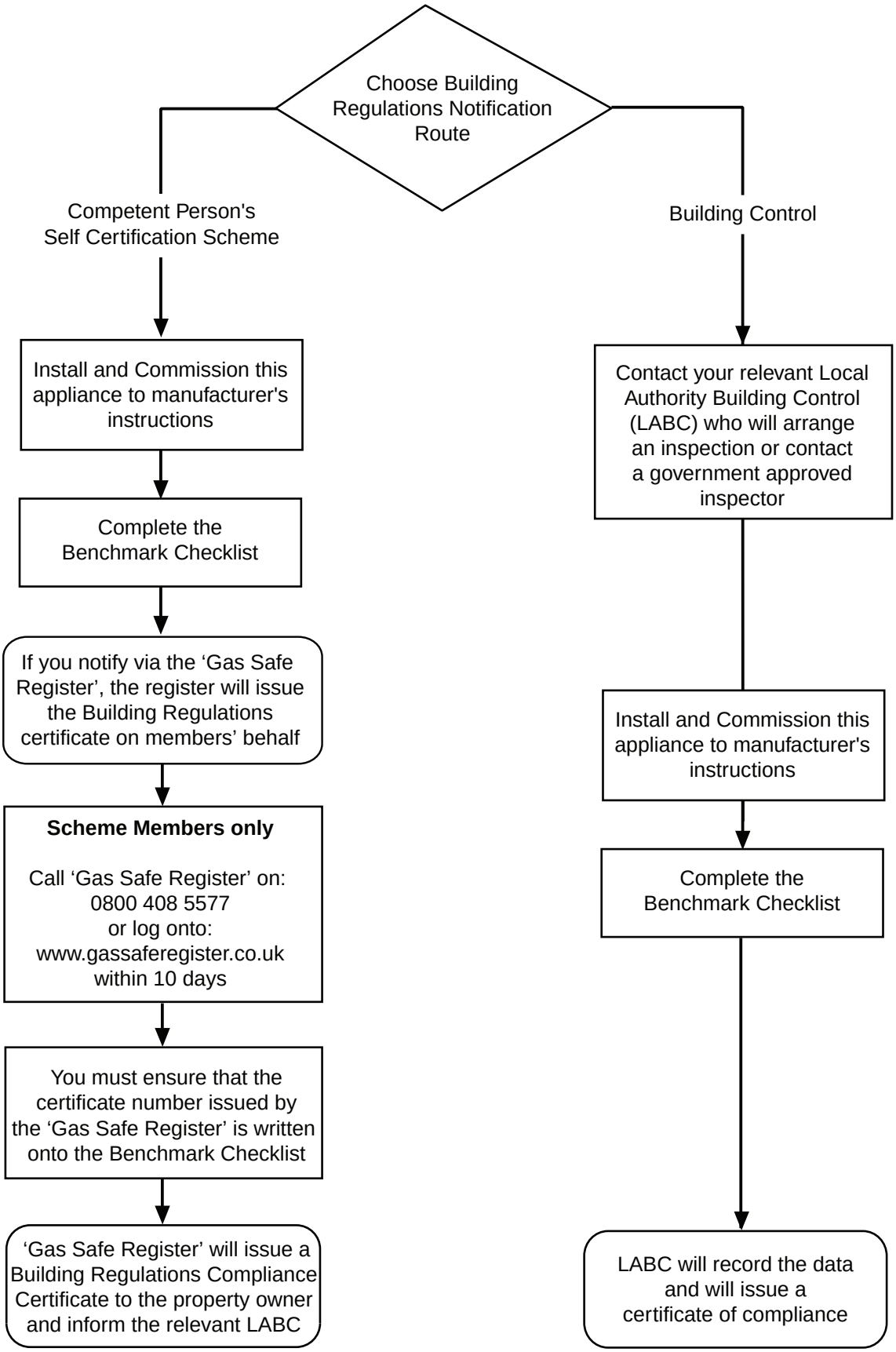

Contents

1 Introduction 7
1.1 General 7
1.2 Additional Documentation 8
1.3 Symbols Used 8
1.4 Abbreviations 8
1.5 Extent of Liabilities 9
1.5.1 Manufacturer’s Liability 9
1.5.2 Installer’s Liability 10
1.6 Homologations 10
1.6.1 Certifications 10
1.6.2 Directives 10
1.6.3 Standards 11

2 Safety 12
2.1 General Safety Instructions 12
2.2 Recommendations 12
2.3 Specific Safety Instructions 13
2.3.1 Handling 13

3 Technical Specifications 14
3.1 Technical Data 14
3.2 Technical Parameters 15
3.2 Dimensions and Connections 16
3.3 Electrical Diagram 17

4 Description of the Product 18
4.1 General Description 18
4.2 Operating Principle 19
4.3 Main Components 20
4.4 Control Panel Description 21
4.4.1 User Interaction Controller 21
4.5 Standard Delivery 21
4.6 Accessories & Options 21
4.6.1 Optional Extras 21

5 Before Installation 22
5.1 Installation Regulations 22
5.2 Installation Requirements 22
5.2.1 Gas Supply 22
5.2.2 Electrical Supply 22
5.2.3 Hard Water Areas 23
5.2.4 Bypass 23
5.2.5 System Control 23
5.2.6 Treatment of Water Circulating Systems 23
5.2.7 System Details - General 24
5.2.8 Low Head Installation / Open 24
5.2.9 Sealed Systems Details 25
5.3 Choice of the Location 26
5.3.1 Location of the Appliance 26
5.3.2 Data Plate 26
5.3.3 Bath & Shower Rooms 26
5.3.4 Ventilation 26
5.3.5 Condensate Drain 27
5.3.6 Clearances - Access in Service 29
5.3.7 Flue / Chimney Location 30
5.3.8 Horizontal Flue / Chimney Systems 32

5.3.9 Flue/Chimney Trim 33
5.3.10 Terminal Guard 33
5.3.11 Flue/Chimney Deflector 33
5.3.12 Flue/Chimney Accessories 33
5.3.13 In Case Rear Flue 33
5.4 Unpacking & Initial Preparation 34
5.4.1 Unpacking 34
5.4.2 Initial Preparation 34
5.4.3 Making the Water Connection 35
5.4.4 Filling the Condensate Trap 35
5.4.5 Connecting the Condensate Drain 35
5.4.6 Connecting the Gas Supply 35

6 Installation 36
6.1 Air Supply / Flue Gas Connections 36
6.1.1 Connecting the Top Flue 36
6.1.2 Connecting the ‘In Case’ Rear Flue 38
6.2 Electrical Connections 40
6.2.1 Electrical Connections of the Appliance 40
6.2.2 Connecting External Devices 40
6.3 Filling the System 41
6.4 Completing the Installation 41
6.4.1 Completion 41

7 Commissioning 42
7.1 General 42
7.2 Checklist before Commissioning 42
7.2.1 Preliminary Electrical Checks 42
7.2.2 Checks 42
7.3 Commissioning Procedure 42
7.4 Gas Settings 43
7.4.1 ‘Chimney Sweep’ Mode 43
7.4.2 ‘Chimney Sweep’ Mode - Combustion Check 44
7.5 Configuring the System 45
7.5.1 Check the Operational (Working) Gas Inlet Pressure & Gas Rate 45
7.6 Final Instructions 46

8 Operation 47
8.1 General 47
8.2 Start-Up 47
8.3 Shutdown 47
8.4 Use of the Control Panel 47
8.5 Frost Protection 47

9 Settings 47
9.1 Parameters 47

10 Maintenance **48**
10.1 General 48
10.2 Standard Inspection & Maintenance Operation 49
10.3 Specific Maintenance Operation 51
10.3.1 Spark Ignition Electrode 51
10.3.2 Automatic Air Vent 51
10.3.3 Condensate Trap 51
10.3.4 Removal of Ducts 52
10.3.5 Pressure Switch (24 & 30 only) 52
10.3.6 Flow Temperature Sensor 52
10.3.7 Overheat Sensor 53
10.3.8 Return Temperature Sensor 53
10.3.9 User Interaction Controller 53
10.3.10 Combustion Control Unit 54
10.3.11 Setting the Gas Valve (CO_2 Check) 55

11 Troubleshooting **56**
11.1 Error Codes - Auto Reset 56
11.2 Lockout Condition 57

12 Decommissioning Procedure **58**
12.1 Decommissioning Procedure 58

13 Spare Parts **59**
13.1 General 59
13.2 Short Parts List 59

Benchmark Commissioning Checklist **60**

1 Introduction

1.1 General

WARNING

Installation, repair and maintenance must only be carried out only by a competent person. This document is intended for use by competent persons,

All Gas Safe registered engineers carry an ID card with their licence number and a photograph. You can check your engineer is registered by telephoning 0800 408 5500 or online at www.gassaferegister.co.uk

This appliance must be installed in accordance with the manufacturer's instructions and the regulations in force. If the appliance is sold or transferred, or if the owner moves leaving the appliance behind you should ensure that the manual is kept with the appliance for consultation by the new owner and their installer. Read the instructions fully before installing or using the appliance.

In GB, this must be carried out by a competent person as stated in the Gas Safety (Installation & Use) Regulations (as may be amended from time to time).
Definition of competence: A person who works for a Gas Safe registered company and holding current certificates in the relevant ACS modules, is deemed competent.

In IE, this must be carried out by a competent person as stated in I.S. 813 "Domestic Gas Installations".

The addition of anything that may interfere with the normal operation of the appliance without express written permission from the manufacturer or his agent could invalidate the appliance warranty. In GB this could also infringe the Gas Safety (Installation and Use) Regulations.

The appliance is designed as a boiler for use in residential domestic environments on a governed meter supply only. The selection of this boiler is entirely at the owner's risk. If the appliance is used for purposes other than or in excess of these specifications, the manufacturer will not accept any liability for resulting loss, damage or injury.

The manufacturer will not accept any liability whatsoever for loss, damage or injury arising as a result of failure to observe the instructions for use, maintenance and installation of the appliance.

WARNING

Check the information on the data plate is compatible with local supply conditions.

1.2 Additional Documentation

These Installation & Service Instructions must be read in conjunction with the Flue Accessories & Fitting Guide supplied in the Literature Pack.

Various timers, external controls, flue accessories, etc. are available as optional extras. Full details are contained in the relevant sales literature.

1.3 Symbols Used

In these instructions, various levels are employed to draw the user's attention to particular information. In so doing, we wish to safeguard the user's safety, prevent hazards and guarantee correct operation of the appliance. Each level is accompanied by a warning triangle

DANGER

Risk of a dangerous situation causing serious physical injury.

WARNING

Risk of a dangerous situation causing slight physical injury.

CAUTION

Risk of material damage.

Signals important information .

Signals a referral to other instructions or other pages in the instructions.

1.4 Abbreviations

- **DHW**: Domestic hot water
- **CH**: Central heating
- **GB:** Great Britain
- **IE:** Ireland
- **BS**: British standard
- **HHIC:** Heating and Hotwater Industry Council
- **CSM**: Chimney Sweep Mode
- **PU**: Parameter Unit
- **PCB**: Printed Circuit Board
- **Pn:** Nominal output
- **Qn:** Nominal heat input
- **Hs:** Gross calorific value

1.5 Extent of Liabilities

1.5.1 Manufacturer's Liability

Our products are manufactured in compliance with the requirements of the various european applicable Directives. They are therefore delivered with CE marking and all relevant documentation. In the interest of customers, we are continuously endeavouring to make improvements in product quality. All the specifications stated in this document are therefore subject to change without notice.

The manufacturer will not accept any liability for loss, damage or injury arising as a result of:-

- ► Failure to abide by the instructions on using the appliance.
- ► Failure to regularly maintain the appliance, or faulty or inadequate maintenance of the appliance.
- ► Failure to abide by the instructions on installing the appliance.

This company declares that no substances harmful to health are contained in the appliance or used during appliance manufacture.

The appliance is suitable only for installation in GB and IE and should be installed in accordance with the rules in force, and only used in a suitably ventilated location.

In GB, the installation must be carried out by a Gas Safe Registered Installer. It must be carried out in accordance with the current and relevant requirements of legislation and guidance including the:-

- Gas Safety (Installation & Use) Regulations.
- The appropriate Building Regulations either The Building Regulations, The Building Regulations (Scotland), Building Regulations (Northern Ireland).
- The Water Fittings Regulations or Water Byelaws in Scotland.
- The Current I.E.E. Wiring Regulations.

Where no specific instructions are given, reference should be made to the relevant British Standard Code of Practice.

In IE, the installation must be carried out by a competent person and installed in accordance with the current edition of I.S. 813 ‘Domestic Gas Installations’, the current Building Regulations and reference should be made to the current ETCI rules for electrical installation.

Prior to commissioning all systems must be thoroughly flushed and treated after installation with inhibitor (see section 5.2.6). Failure to do so will invalidate the appliance warranty.

Incorrect installation could invalidate the warranty and may lead to prosecution.

1.5.2 Installer's Responsibility

The installer is responsible for the installation and initial start up of the appliance. The installer must adhere to the following:

- ► Read and follow the instructions given in the manuals provided with the appliance.
- ► Carry out installation in compliance with the prevailing legislation and standards.
- ► Ensure the system is flushed and inhibitor added.
- ► Install the flue/chimney system correctly ensuring it is operational and complies with prevailing legislation and standards, regardless of location of the boiler’s installation.
- ► Only the installer should perform the initial start up and carry out any checks necessary.
- ► Explain the installation to the user.
- ► Complete the Benchmark Commissioning Checklist - this is a condition of the warranty !
- ► Warn the user of the obligation to check the appliance and maintain it in good working order.
- ► Give all the instruction manuals to the user.

1.6 Homologations

1.6.1 Certifications

EC - Declaration of Conformity
Baxi Heating UK Limited being the manufacturer / distributor within the European Economic Area of the following
Potterton Titanium Heat
declare that the above is in conformity with the provisions of the Council Directive
2009/142 EC 92/42 EEC 2004/108 EC 2006/95 EC
2009/125/EC 2010/30/EU
and has been subject to the following conformity procedures laid down in
Annex 2 - Article 3 of 2009/142 EC
under the supervision of the British Standards Institution, a Notified Body authorized by the United Kingdom Competent Authority, and carrying the Notified Body Number 0086.

1.6.2 Directives

The boiler meets the requirements of Statutory Instrument “ The Boiler (Efficiency) Regulations 1993 N° 3083” and is deemed to meet the requirements of Directive 92/42/EEC on the energy efficiency requirements for new hot water boilers fired with liquid or gaseous fuels:-

Type test for purpose of Regulation 5 certified by:
Notified Body 0063.

Product/Production certified by:
Notified Body 0086.

For GB/IE only.

1.6.3 Standards

Codes of Practice - refer to the most recent version

In GB the following Codes of Practice apply:

Standard	Scope
BS 6891	Gas Installation.
BS 5546	Installation of hot water supplies for domestic purposes.
BS EN 12828	Heating systems in buildings.
BS EN 12831	Heating systems in buildings - Calculation of load.
BS EN 14336	Installation & commissioning of water based heating systems.
BS 6798	Installation of gas fired hot water boilers.
BS 5440 Part 1	Flues.
BS 5440 Part 2	Ventilation.
BS 7074	Expansion vessels and ancillary equipment for sealed water systems.
BS 7593	Treatment of water in domestic hot water central heating systems.

In IE the following Codes of Practice apply:

Standard	Scope
I.S. 813	Domestic Gas Installations.

The following standards give valuable additional information;

BS 5546	Installation of hot water supplies for domestic purposes.
BS EN 12828	Heating systems in buildings.
BS EN 12831	Heating systems in buildings - Calculation of load.
BS EN 14336	Installation & commissioning of water based heating systems.
BS 7074	Expansion vessels and ancillary equipment for sealed water systems.
BS 7593	Treatment of water in domestic hot water central heating systems.

2 Safety

2.1 General Safety Instructions

DANGER

If you smell gas:
1. Turn off the gas supply at the meter
2. Open windows and doors in the hazardous area
3. Do not operate light switches
4. Do not operate any electrical equipment
5. Do not use a telephone in the hazardous area
6. Extinguish any naked flame and do not smoke
7. Warn any other occupants and vacate the premises
8. Telephone the National Gas Emergency Service on:- 0800 111 999

WARNING

This boiler can be used by children aged 8 years and above and by persons with reduced physical, sensory or mental capabilities or lack of experience and knowledge when they have been given supervision or instruction concerning the safe use of the device and understand the resulting risks. Children must not be allowed to play with the appliance. Cleaning and user maintenance must not be carried out by children without supervision.

2.2 Recommendations

WARNING

Installation, repair and maintenance must be carried out by a **Gas Safe Registered Engineer** (in accordance with prevailing local and national regulations).

When working on the boiler, always disconnect the boiler from the mains and close the main gas inlet valve.

After maintenance or repair work, check the installation to ensure that there are no leaks.

CAUTION

The boiler should be protected from frost.

Only remove the casing for maintenance and repair operations. Replace the casing after maintenance and repair operations.

2.3 Specific Safety Instructions

2.3.1 Handling

General

- The following advice should be adhered to, from when first handling the boiler to the final stages of installation, and also during maintenance.
- Most injuries as a result of inappropriate handling and lifting are to the back, but all other parts of the body are vulnerable, particularly shoulders, arms and hands. Health & Safety is the responsibility of EVERYONE.
- Before lifting the boiler, the circumstances of the installation must be assessed, please use appropriate manual handling techniques and equipment.
- Do not handle or lift unless you feel physically able.
- Wear appropriate Personal Protection Equipment e.g. protective gloves, safety footwear etc.

Preparation

- Co-ordinate movements - know where, and when, you are both going.
- Minimise the number of times needed to move the boiler - plan ahead.
- Always ensure when handling or lifting the route is clear and unobstructed. If possible avoid steps, wet or slippery surfaces, unlit areas etc. and take special care on ladders/into lofts.

Technique

- When handling or lifting always use safe techniques - keep your back straight, bend your knees. Don’t twist - move your feet, avoid bending forwards and sideways and keep the load as close to your body as possible.
- Where possible transport the boiler using a sack truck or other suitable trolley.
- Always grip the boiler firmly, and before lifting feel where the weight is concentrated to establish the centre of gravity, repositioning yourself as necessary. See the ‘Installation’ section of these instructions for recommended lift points.

Remember

- The circumstances of each installation are different. Always assess the risks associated with handling and lifting according to the individual conditions.
- If at any time when installing the boiler you feel that you may have injured yourself STOP !! DO NOT ‘work through’ the pain - you may cause further injury.

IF IN ANY DOUBT DO NOT HANDLE OR LIFT THE BOILER - OBTAIN ADVICE OR ASSISTANCE BEFORE PROCEEDING !

3 Technical Specifications

3.1 Technical Data

Appliance Type C_{13} C_{33}

Appliance Category CAT I $_{2H}$

Heat Input Qn Hs (Gross)

		Max	Min
12 model	kW	14.88	8.59
15 model	kW	18.32	8.59
18 model	kW	21.75	8.59
24 model	kW	28.62	8.59
30 model	kW	34.35	8.59

Heat Output Pn
(Non Condensing 70° C Mean Water Temp)

		Max	Min
12 model	kW	13	7.5
15 model	kW	16	7.5
18 model	kW	19	7.5
24 model	kW	25	7.5
30 model	kW	30	7.5

Max Gas Rate (Natural Gas - G20)
(After 10 Mins)

	m^3/hr
12 model	1.42
15 model	1.75
18 model	2.07
24 model	2.73
30 model	3.27

Dynamic (nominal) Inlet Pressure
(Natural Gas - G20)
mbar 20
with a CV of 37.78 MJ/m^3

Horizontal Flue Terminal Dimensions Diameter 100mm
Projection 125mm

Connections

Gas Supply Connection	-	22mm
Central Heating Flow (use ONLY compression fitting)	-	22mm
Central Heating Return (use ONLY compression fitting)	-	22mm
Condensate Drain	-	for 21.5mm plastic waste pipe

Outercase Dimensions

Overall Height Inc Flue Elbow	-	790mm
Casing Height	-	625mm
Casing Width	-	370mm
Casing Depth	-	270mm

Clearances

Both Sides	5mm Min
Above Casing (Top Flue)	190mm Min
Above Casing (Rear Flue)	35mm Min
Below Casing (in Cupboard)	35mm Min
Below Casing	120 mm Min
Front (For Servicing)	500mm Min
Front (In Operation)	5mm Min

See Section 5.3.6 for full details !

Weights

Packaged Boiler Carton	21.5 kg
Installation Lift Weight	19.5 kg

CO/CO_2 Ratio Up to a maximum of 0.004

Flow Temperature (adjustable)
30° C to 80° C (± 5° C)

Recommended System Temperature Drop
Condensing 20°C

Nox Class 5

Electrical Supply 230V~ 50Hz
(Appliance must be connected to an earthed supply)

Power Consumption		**Max Rate**
12 model	W	17
15 model	W	20
18 model	W	23
24 model	W	33
30 model	W	44

External Fuse Rating 3A

Internal Fuse Rating (Terminal Strip)
Fuse 1.6T

Electrical Protection IPX4D

Water Content
litres 1.7

Static Head
max 25 metres

Low Head 0.4m min

System Detail
fully pumped open vented & sealed systems

Pressure Switch
12/15/18 Model - Not Fitted
24/30 Model - Fitted

NOTE: All data in this section are nominal values and subject to normal production tolerances.

Product Characteristics Database (SEDBUK)

SAP 2009 Annual Efficiency

12 model - 89.2% **24 model - 89.1%**
15 model - 89.2% **30 model - 89.1%**
18 model - 89.2%

This value is used in the UK Government's Standard Assessment Procedure (SAP) for energy rating of dwellings. The test data from which it has been calculated has been certified by 0063.

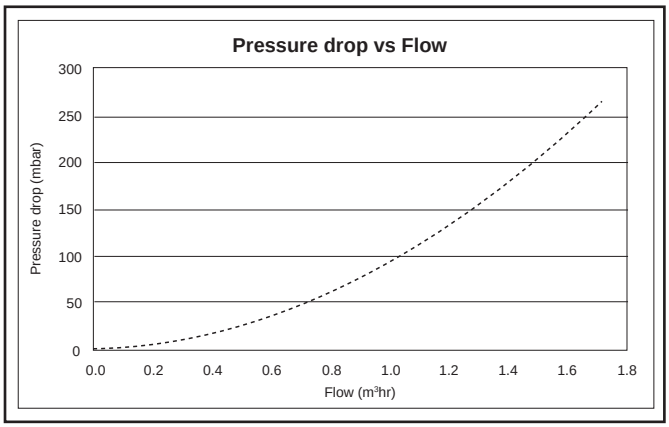

3.2 Technical Parameters

Technical parameters for boiler space heaters

Potterton Titanium Heat			**12**	**15**	**18**	**24**	**30**
Condensing boiler			Yes	Yes	Yes	Yes	Yes
Low-temperature boiler(1)			No	No	No	No	No
B1 boiler			No	No	No	No	No
Cogeneration space heater			No	No	No	No	No
Combination heater			No	No	No	No	No
Rated heat output	*Prated*	kW	13	16	19	25	30
Useful heat output at rated heat output and high temperature regime	P_4	kW	13.0	16.0	19.0	25.0	30.0
Useful heat output at 30% of rated heat output and low temperature regime(1)	P_1	kW	4.3	5.4	6.4	8.4	10.1
Seasonal space heating energy efficiency	η_s	%	93	93	93	93	93
Useful efficiency at rated heat output and high temperature regime(2)	η_4	%	88.0	87.9	87.8	87.7	87.5
Useful efficiency at 30% of rated heat output and low temperature regime(1)	η_1	%	98.0	98.0	98.0	98.0	98.0
Auxiliary electricity consumption							
Full load	*elmax*	kW	0.017	0.020	0.023	0.033	0.044
Part load	*elmin*	kW	0.014	0.014	0.014	0.014	0.014
Standby mode	P_{SB}	kW	0	0	0	0	0
Other items							
Standby heat loss	P_{stby}	kW	0.028	0.028	0.028	0.028	0.028
Ignition burner power consumption	P_{ign}	kW	-	-	-	-	-
Annual energy consumption	Q_{HE}	kWh GJ	11183 40	13764 50	16344 59	21506 77	25807 93
Sound power level, indoors	L_{WA}	dB	32	33	34	37	41
Emissions of nitrogen oxides	NO_X	mg/kWh	18	20	21	24	25

(1) Low temperature means for condensing boilers 30°C, for low temperature boilers 37°C and for other heaters 50°C return temperature (at heater inlet).
(2) High temperature regime means 60°C return temperature at heater inlet and 80°C feed temperature at heater outlet.

See
The back cover for contact details.

3.2 Dimensions and Connections

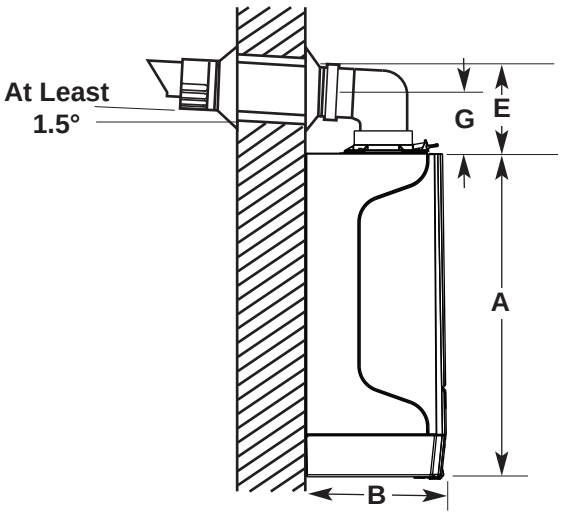

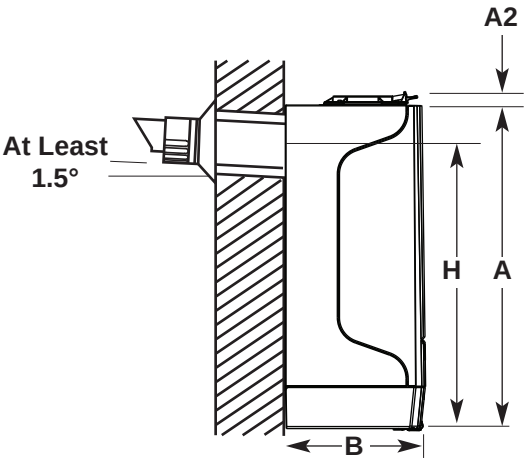

DIMENSIONS	
A	625mm
A2	25mm
B	270mm
C	370mm
D	116mm Ø Min.
E	165mm
F	155mm
G	110mm
H	550mm

For clearances see Section 5.3.6

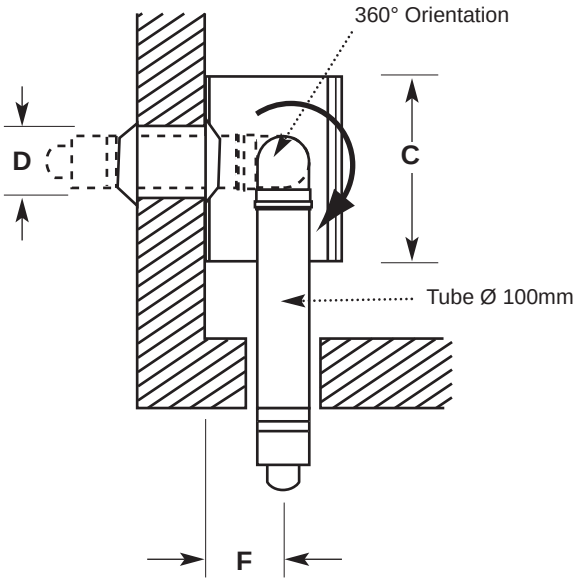

NOTE: There must be no part of the air duct (white tube) visible outside the property after installation. The flue seal should fit neatly and effect a good seal.

IMPORTANT: The 1.5° fall provided by the elbow is to allow condensate to run back to the boiler, for disposal through the condensate discharge pipe. When using extensions the fall along the flue system must be increased to 3°.
Where extensions are used ensure the clearance above the top of the flue elbow (X) is as shown in the table below:-

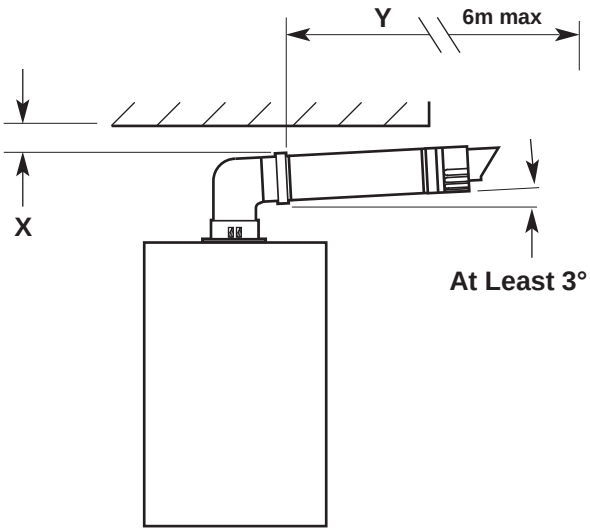

Flue length (Y)	Clearance (X)
up to 1m	30mm
1m - 2m	84mm
2m - 3m	134mm
3m - 4m	186mm
4m - 5m	238mm
5m - 6m	290mm

3.3 Electrical Diagram

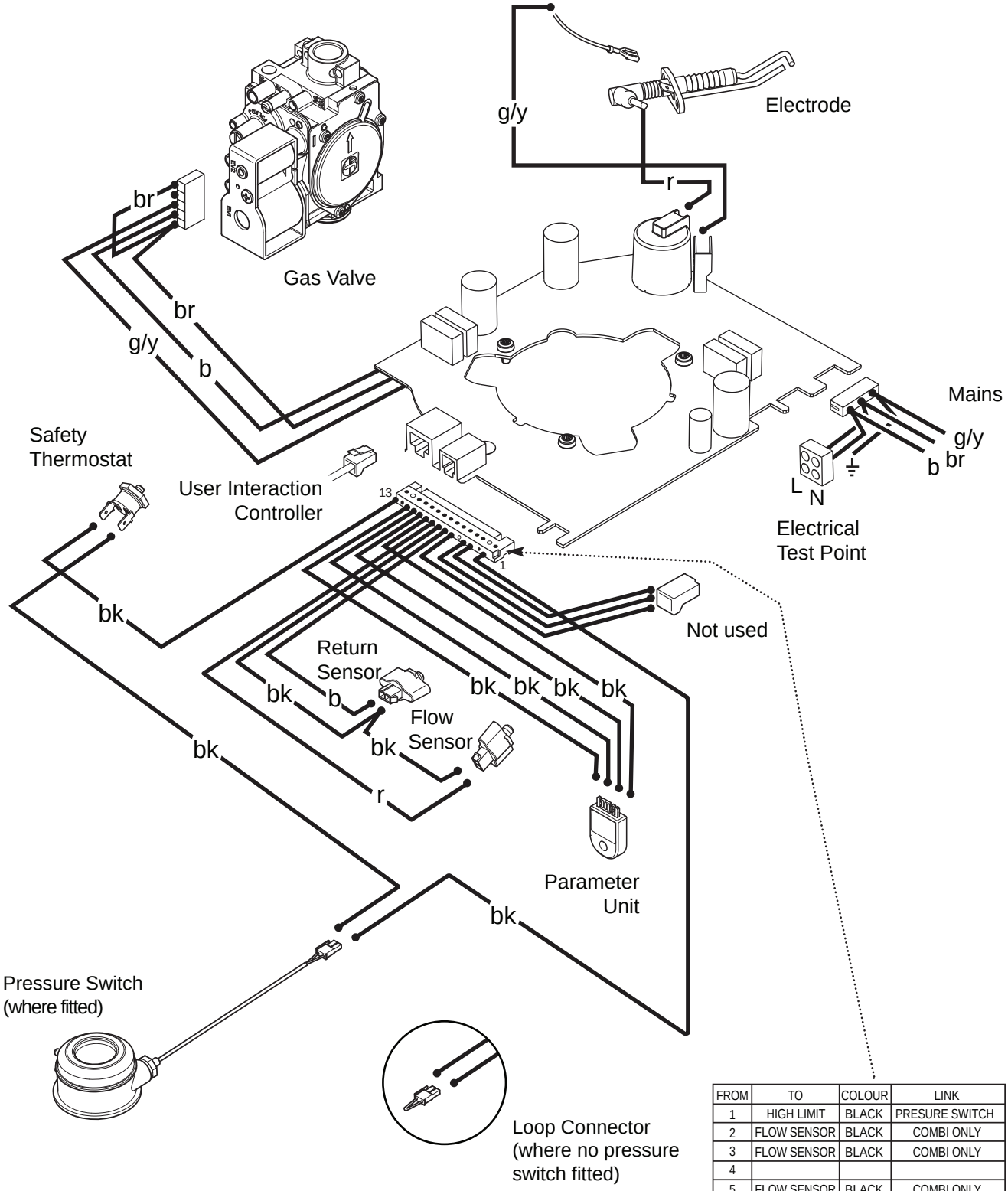

FROM	TO	COLOUR	LINK
1	HIGH LIMIT	BLACK	PRESURE SWITCH
2	FLOW SENSOR	BLACK	COMBI ONLY
3	FLOW SENSOR	BLACK	COMBI ONLY
4			
5	FLOW SENSOR	BLACK	COMBI ONLY
6	RETURN TEMP	BLUE	
7	RETURN TEMP	BLACK	FLOW TEMP
8	FLOW TEMP	RED	
9	PSU	BLACK	
10	PSU	BLACK	
11	PSU	BLACK	
12	PSU	BLACK	
13	HIGH LIMIT	BLACK	PRESURE SWITCH

13 12 11 10 9 8 7 6 5 4 3 2 1

Key To Wiring Colours

b - Blue
r - Red
br - Brown
g/y - Green/Yellow
bk - Black

4 Description of the Product

4.1 General Description

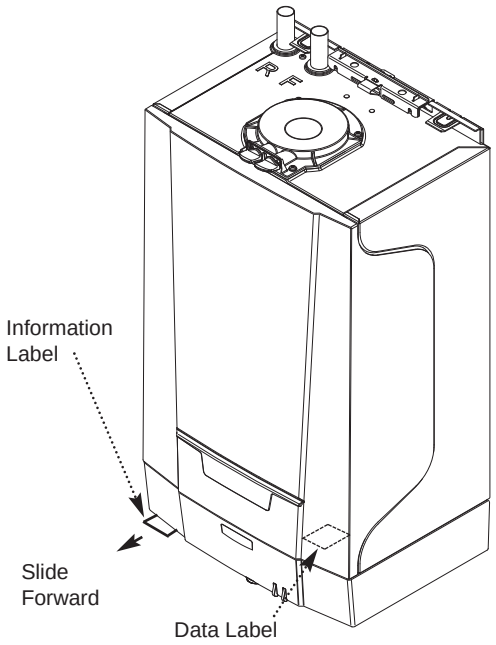

Fig. 1

1. The Potterton Titanium Heat Range are gas fired wall mounted powered flue condensing boilers.

2. The maximum output of the boiler is :-

12 model -	13 kW
15 model -	16 kW
18 model -	19 kW
24 model -	25 kW
30 model -	30 kW

3. The boiler modulates automatically to the system load up to the set output. It is designed for use on Natural Gas (G20) only.

4. The two illuminated User Interaction Controller push buttons provide information about the operating condition of the boiler.

5. The boiler is suitable for fully pumped open vented central heating and domestic hot water systems and sealed systems.

6. An information label giving details of the model, serial number and Gas Council number is situated on the front left underside of the outercase and is accessed by pulling forward gently (Fig. 1).

7. The boiler data label is positioned on the inside lower right-hand side of the boiler and can be seen when the outercase panel is removed (Fig. 1).

8. The boiler is intended to be installed in residential/domestic environments on a governed meter supply only.

9. The boiler must be installed with one of the purpose designed flues such as one of the standard telescopic flue kits detailed in the Flue Accessories & Fitting Guide.

All systems must be thoroughly cleansed, flushed and treated with inhibitor (see Section 5.2.6).

These Installation & Servicing Instructions MUST be read in conjunction with the Flue Accessories & Fitting Guide supplied in the Literature Pack.

4.2 Operating Principle

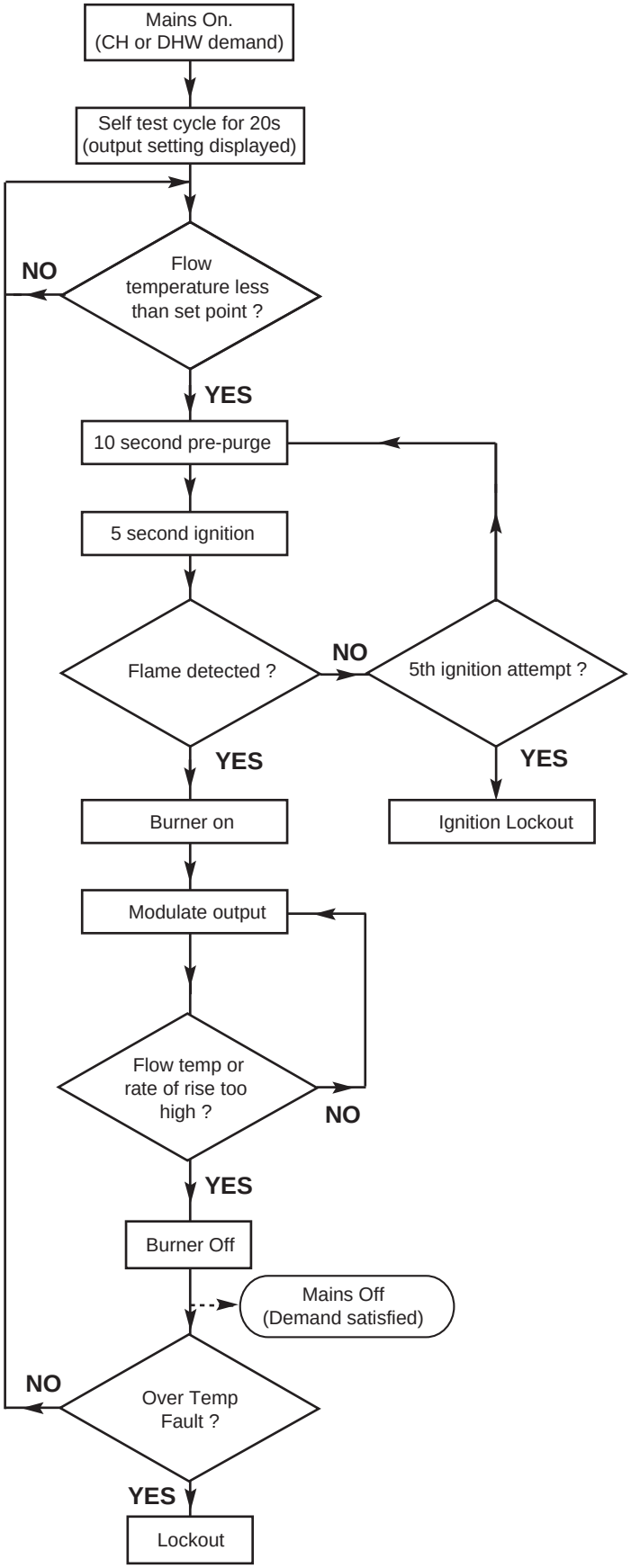

1. **Switched Live On:** When the boiler switched live turns on the boiler, a 20 second check cycle takes place. If the flow temperature is less than the boiler set-point temperature the ignition cycle will start. Pre-purge, Ignition and Burner on.

2. **Fan Pre-Purge:** The boiler has a 10 second pre-purge (Fan On, Spark Generator and Gas Valve off) before the start of the ignition sequence.

3. **Ignition:** The boiler has a 5 second ignition period (Fan, Spark Generator and Gas Valve on) and burner on occurs when a flame is detected. If a flame is not detected within the 5 second ignition period then 4 more ignition attempts are made. If a flame is not detected after the 5 ignition attempts the boiler goes to an ignition lock-out and an error code is displayed.

4. **Burner on:** After a successful ignition, Burner on occurs (Fan and Gas Valve on, Spark Generator off). The boiler flow temperature is controlled by varying the fan speed (and thereby the gas rate) to achieve the optimum boiler operation. If the boiler flow temperature exceeds the boiler set-point, the burner will turn off (Fan and Gas Valve off).

5. **Overtemperature:** If a boiler overtemperature event occurs (triggering the safety thermostat) the burner shuts down (Fan off and Gas Valve off). A locking signal is generated and an error code is displayed.

6. **Lockout:** If a lock-out error is displayed (Fan, Spark Generator and Gas Valve off) the boiler can only be reset by manually pressing the reset button. If 5 lock-outs are reset within a 1 hour period then boiler becomes inoperable. It is necessary to switch off the power supply to the boiler, and when reinstated the reset button pressed again to operate the appliance.

Any lock-out errors that occur regularly will require further investigation and rectification.

Baxi Customer Support: 0344 871 1545.

4.3 Main Components

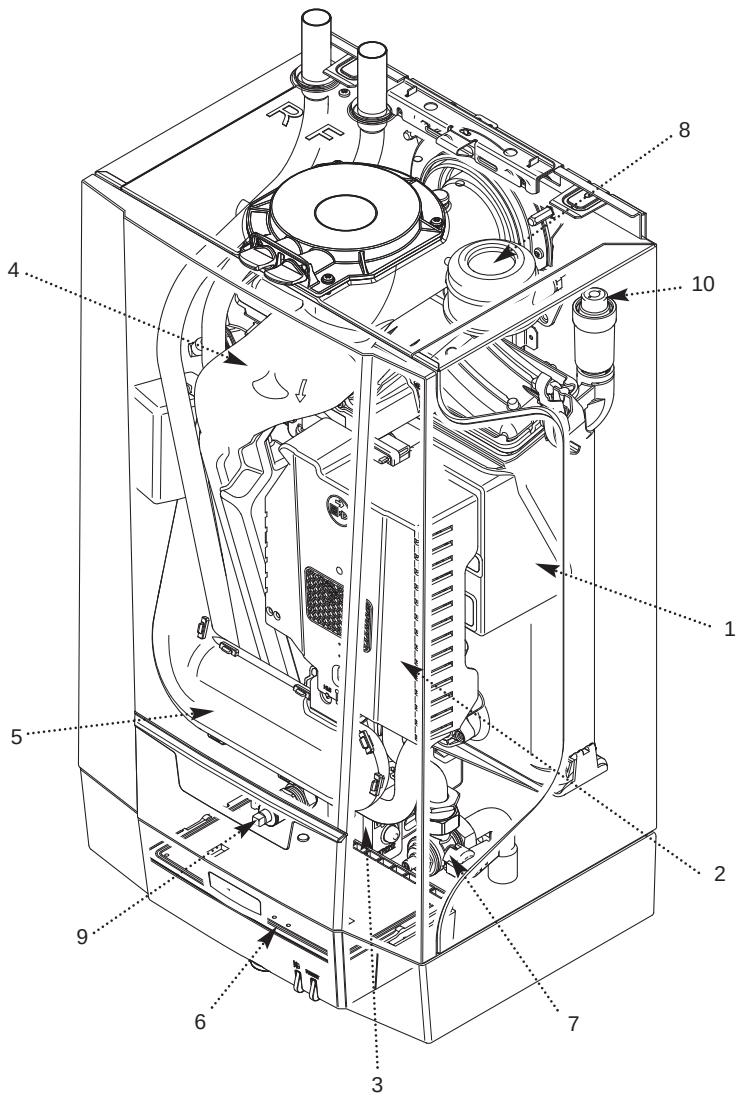

1. Heat Exchanger
2. Combustion Control Unit
3. Condensate Trap
4. Exhaust Tube
5. Inlet Silencer
6. User Interaction Controller
7. Gas Cock
8. Air Pressure Switch (24 & 30 models only)
9. System Drain Cock
10. Air Vent

4.4 Control Panel Description

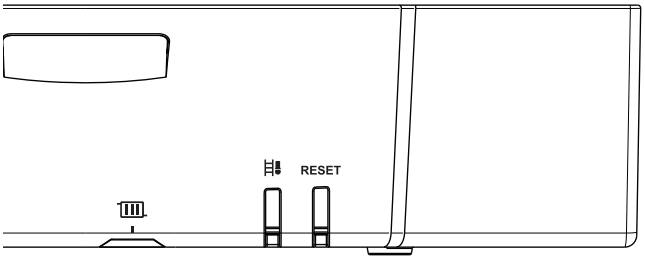

Fig. 2

4.4.1 User Interaction Controller (Control Panel)

Key to symbols (Fig. 2)

Heating Water Temperature

Sweep Key and Status Signals

RESET Reset button and On/Off Signal

1. The User Interaction Controller has 2 illuminating push buttons which provide information about the operating condition of the boiler.

2. The **RESET** button lights up green when the boiler has a demand for CH or DHW.

3. The button can flash in a range of colours and at different frequencies.

4. The User Interaction Controller also has one rotary knob. The rotary knob can be used to set the maximum flow temperature of the heating water.

Maximum temperature is 80°C

5. The temperature on this rotary knob must be set to a higher temperature than the cylinder thermostat to achieve the required hot water demand.

4.5 Standard Delivery

1. The pack contains:

- ► Boiler
- ► Wall Fixing Bracket
- ► Copper Tail (Gas Connection) and Fibre Washer
- ► Top Flue Adaptor
- ► Power Lead
- ► Literature pack
  - Installation & Servicing Manual (including ‘benchmark’)
  - User Guide Instructions
  - Flue Accessories & Fitting Guide
  - Warranty Documentation
  - System Additive Leaflet
  - Wall Template
  - Product Leaflet
  - Package Leaflet

4.6 Accessories & Options

4.6.1 Optional Extras

1. Various items are available as optional extras.

Flue Accessories (elbows, extensions, clamps etc.)
(refer to the Flue Accessories & Fitting Guide supplied in the literature pack.)
Remote relief valve kit
1M Condensate Drain Pipe ‘Trace Heating’ Element
2M Condensate Drain Pipe ‘Trace Heating’ Element
3M Condensate Drain Pipe ‘Trace Heating’ Element
5M Condensate Drain Pipe ‘Trace Heating’ Element

5 Before Installation

5.1 Installation Regulations

WARNING

Installation, repair and maintenance must only be carried out by a competent person. This document is intended for use by competent persons.

Installation must be carried out in accordance with the prevailing regulations, the codes of practice and the recommendations in these instructions.

Installation must also respect the following points:

- ► This instruction manual and any other applicable documentation.
- ► Building Regulations.
- ► British Standards.
- ► 92/42/EEC Efficiency Directive.
- ► 2009/142/EC Gas Appliance Directive.
- ► 2006/95/EC Low Voltage Directive.
- ► 2004/108/EC Electromagnetic Compatibility Directive.
- ► Gas safety regulations.
- ► Water supply regulations.

5.2 Installation Requirements

5.2.1 Gas Supply

1. The gas installation should be in accordance with the relevant standards. In GB this is BS 6891 (NG). In IE this is the current edition of I.S. 813 “Domestic Gas Installations”.

2. The connection to the appliance is a 22mm copper tail located at the rear of the gas service cock. It is not necessary for the gas supply pipework to be 22mm, providing that the requirements in paragraph 5.2.1.3 below are achieved.

3. Ensure that the pipework from the meter to the appliance is of adequate size and the demands of any other gas appliances in the property are taken into consideration. The gas service cock incorporates a pressure test point.

5.2.2 Electrical Supply

1. External wiring must be correctly earthed, polarised and in accordance with relevant regulations/rules. In GB this is the current I.E.E. Wiring Regulations. In IE reference should be made to the current edition of ETCI rules.

2. The mains supply is 230V ~ 50Hz fused at 3A.

The method of connection to the electricity supply must facilitate complete electrical isolation of the appliance. Connection may be via a fused double-pole isolator with a contact separation of at least 3mm in all poles and servicing the boiler and system controls only. Isolation of the boiler can be checked at the electrical test point.

5.2.3 Hard Water Areas

1. If the area of the installation is recognised as a HARD WATER AREA then this must be taken into account when filling the system.

5.2.4 Bypass

1. Where a system employs TRV's on all radiators and includes two port zone valves an automatic bypass must also be fitted to protect system components.

2. Existing systems with a 3 port valve may not require a bypass depending on type of radiator valves fitted.

3. Current editions of Building Regulations and Central Heating System Specification documents give additional guidance.

5.2.5 System Control

1. The system must be fitted with thermostats and TRVs to comply with Part L of the Building Regulations.

5.2.6 Treatment of Water Circulating Systems

1. All recirculatory water systems will be subject to corrosion unless an appropriate water treatment is applied. This means that the efficiency of the system will deteriorate as corrosion sludge accumulates within the system, risking damage to pump and valves, boiler noise and circulation problems.

2. When fitting new systems flux will be evident within the system, which can lead to damage of system components.

3. BS7593 gives extensive recommendations on system cleansing and water treatment.

4. All systems must be thoroughly drained and flushed out using an appropriate proprietary flushing agent.

5. A suitable inhibitor must then be added to the system.

6. All system additives (flushing agents, cleansers, inhibitors etc.) must comply with the requirements of BS7593. Full instructions are supplied with the products and for further information contact the additive manufacturer directly or consult their website.

Failure to flush and add inhibitor to the system will invalidate the appliance warranty.

7. It is important to check the inhibitor concentration after installation, system modification and at every service in accordance with the inhibitor manufacturer. (Test kits are available from inhibitor stockists.)

8. For information or advice regarding any of the above contact Baxi Customer Support 0344 871 1545.

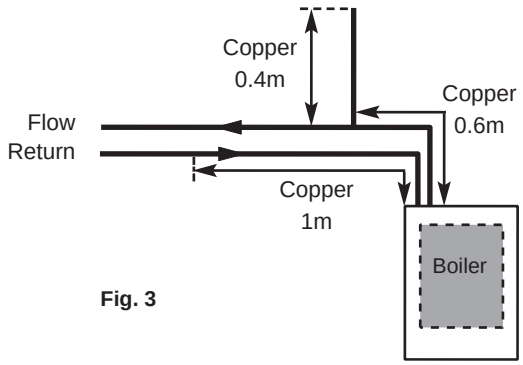

Fig. 3

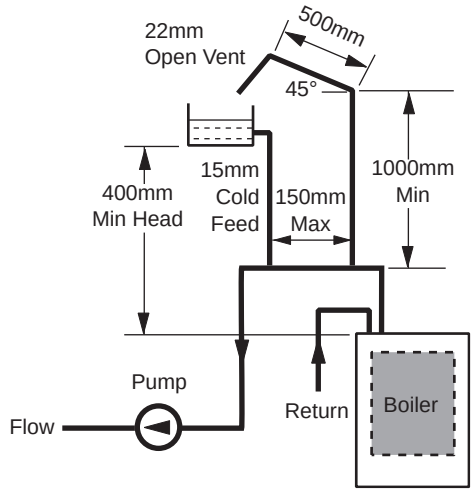

Fig. 4 **Typical Low Head Installation**

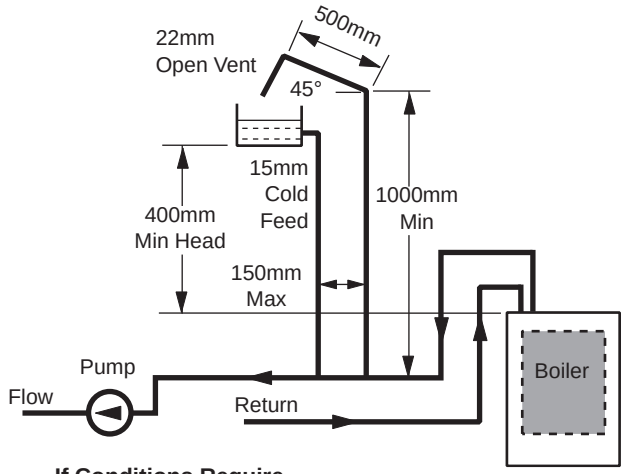

If Conditions Require, This System Possible

Fig. 5

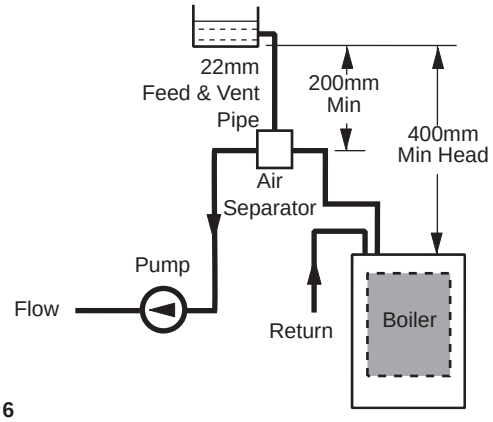

Fig. 6

5.2.7 System Details - General

Water Circulating Systems

1. The appliance is suitable for use with open vent fully pumped systems and sealed systems .

The following conditions should be observed on all systems:

- The static head must not exceed 25m of water.
- The boiler must not be used with a direct cylinder.
- Drain cocks should be fitted to all system low points.
- All gas and water pipes and electrical wiring must be installed in a way which would not restrict the servicing of the boiler.
- Position isolating valves as close to circulating pump as possible.

Pipework

1. The sizes of flow and return pipes from the boiler should be determined by normal methods, according to the requirements of the system. The connections on the boiler are 22mm. Capillary solder fittings MUST NOT be used - ONLY compression fittings are suitable.

2. A 20 °C drop in temperature across the system is recommended for condensing boilers. Existing radiators may be oversized and so allow this, but where radiator sizing is marginal it may be advisable to retain a system temperature drop of 11°C.

3. In systems using non-metallic pipework it is necessary to use copper pipe for the boiler Flow and Return. The copper must extend at least 1 metre from the boiler and include any branches (Fig. 3).

5.2.8 Low Head Installation / Open

1. Using a close coupled arrangement the minimum head is as shown in the diagrams (Figs. 4, 5 & 6) subject to the following conditions:

a) The pump being adjusted to give a 20°C drop across the boiler.
b) Ideally the pump should be fitted on the flow but providing that the cold feed and open vent pipe are positioned correctly (e.g. the system is not prone to pumping over, air entrainment etc.) the pump may be fitted on the primary return pipe.
c) The pump must be fitted in accordance with the pump manufacturer's instructions.
d) The open vent pipe must be taken up from a tee in a horizontal section of the flow pipe.

Venting

1. A method of venting the system during filling and commissioning is provided by an automatic air vent fitted inside the boiler. The air vent is supplied in the open position.

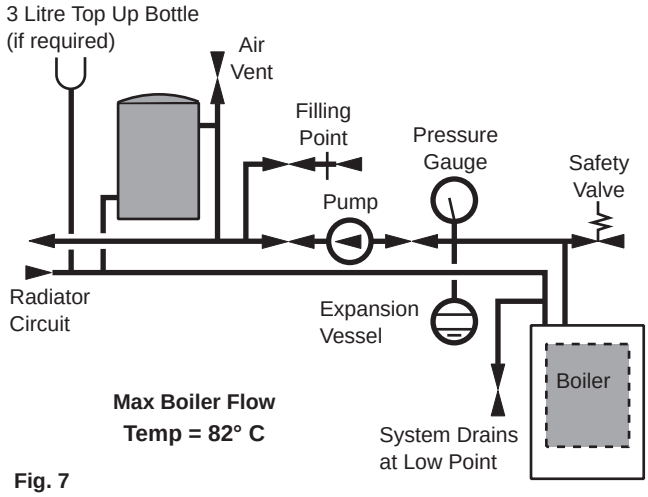

Fig. 7

Method of determining minimum valve of expansion vessel volume for sealed systems using Baxi Boilers

Static Head (m)	Vessel Charge Pressure (Bar)	Initial System Pressure (Bar)	Multiply Total Water Content Of System By (Litres)
<5	0.5	0.5 1.0 1.5 2.0	0.067 0.112 0.207 0.441
<10	1.0	1.0 1.5 2.0	0.087 0.152 0.330
<15	1.5	1.5 2.0	0.125 0.265

Table. 1a

Example :- System Volume = 75 litres
Vessel Charge Pressure = 1.0 bar
Initial System Pressure = 1.5 bar
Then :- 75 x 0.152 = 11.4 litres
Expansion Vessel Volume

NOTE
Where a vessel of the calculated size is not obtainable then the next available larger size should be used.

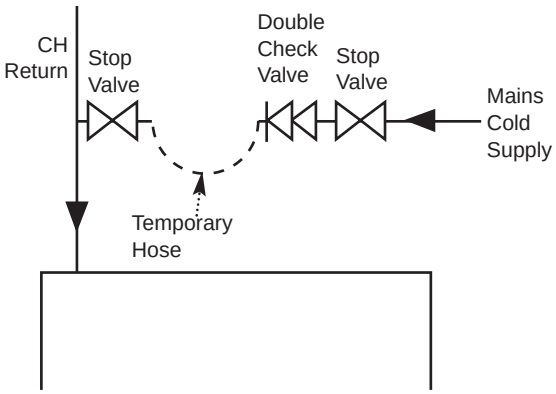

Fig. 8

5.2.9 Sealed Systems Details

1. **SAFETY VALVE** - A safety valve complying with the requirements of BS EN ISO 4126-1 must be fitted close to the boiler on the flow pipe by means of a horizontal or vertically upward connection with no intervening valve or restrictions and should be positioned to facilitate testing. The valve should be pre-set and non-adjustable to operate at a pressure of 3 bar. It must be arranged to discharge any water or steam through a pipe to a safe outlet position.

2. **PRESSURE GAUGE** - A pressure gauge of minimum range 0-4 bar with a fill pressure indicator must be fitted to the system, preferably at the same point as the expansion vessel in an easily visible position.

3. **EXPANSION VESSEL** - An expansion vessel complying with the requirements of BS EN 13831 must be fitted to the system by means of a connection close to the inlet side of the circulating pump in accordance with the manufacturers instructions, the connecting pipe being unrestricted and not less than 15mm nominal size. The volume of the vessel should be suitable for the system water content and the nitrogen or air charge pressure should not be less than the system static head (See Table. 1a).

☞ Further details of sealed system design can be obtained from BS EN 12828, 12831 & 14336 and the British Gas publication entitled 'Specifications for Domestic Wet Central Heating Systems'.

4. **FILLING POINT** - A filling point connection on the central heating return pipework must be provided to facilitate initial filling and pressurising and also any subsequent water loss replacement / refilling. The sealed primary circuits may be filled or replenished by means of a temporary connection between the primary circuit and a supply pipe provided a ‘Listed’ double check valve or some other no less effective backflow prevention device is permanently connected at the inlet to the circuit and the temporary connection is removed after use. The filling method adopted must be in accordance with all relevant water supply regulations and use approved equipment.
Your attention is drawn to, for GB: Guidance G24.2 and recommendation R24.2 of the Water Regulations Guide. for IE: the current edition of I.S. 813 “Domestic Gas Installations”.

5. **MAKE UP SYSTEM** - A method of replacing water lost from the system should be provided either by means of a make up vessel of not more than 3 litres capacity, mounted above the highest point of the system, or by re-pressurisation of the system.

6. **VENTING** - A method of venting the system during filling and commissioning is provided by an automatic air vent fitted inside the boiler. The air vent is supplied in the open position.

7. **HOT WATER STORAGE** - The hot water storage vessel must be of the indirect coil type. All components used in the system must be suitable for operation at 110°C and at the pressure allowed by the safety valve.

5.3 Choice of the Location

5.3.1 Location of the Appliance

Due to the high efficiency of the boiler a plume of water vapour will be discharged from the flue. This should be taken into account when siting the flue terminal.

1. The boiler may be fitted to any suitable wall with the flue passing through an outside wall or roof and discharging to atmosphere in a position permitting satisfactory removal of combustion products and providing an adequate air supply. The boiler should be fitted within the building unless otherwise protected by a suitable enclosure i.e. garage or outhouse. (The boiler may be fitted inside a cupboard).

2. If the boiler is sited in an unheated enclosure then it is recommended to incorporate an appropriate device for frost protection in the system controls.

3. If the boiler is fitted in a room containing a bath or shower it MUST NOT BE fitted in zone 0 or 1, ONLY within the shaded area (Figs. A & B shows zone dimensions for a bathtub. For other examples refer to the Current I.E.E. Wiring Regulations) reference must be made to the relevant requirements.
In **GB** this is the current I.E.E. Wiring Regulations and Building Regulations.
In **IE** reference should be made to the current edition of I.S. 813 “Domestic Gas Installations” and the current ETCI rules.

4. If the boiler is to be fitted into a building of timber frame construction then reference must be made to the current edition of Institute of Gas Engineers Publication IGE/UP/7 (Gas Installations in Timber Framed Housing).

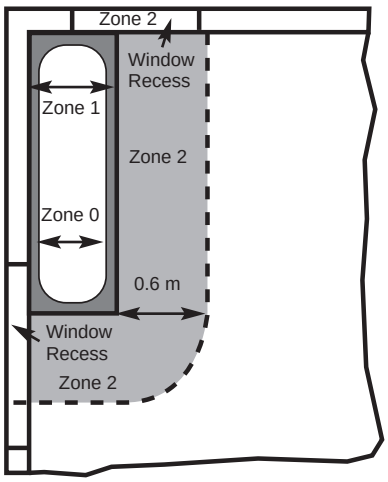

Fig. A In GB Only

5.3.2 Data Plate

1. The boiler data label gives details of the model, serial number and Gas Council number and is situated on the lower right hand inside face of the outercase. It is visible when the outercase front panel is removed (Fig. 1).

5.3.3 Bath & Shower Rooms

1. If the boiler is fitted in a room containing a bath or shower it can be fitted in zone 2, (Figs. A & B shows zone dimensions for a bathtub. For other examples refer to the Current I.E.E. Wiring Regulations) reference must be made to the relevant requirements.
In GB this is the current I.E.E. Wiring Regulations and Building Regulations.
In IE reference should be made to the current edition of I.S. 813 “Domestic Gas Installations” and the current ETCI rules.

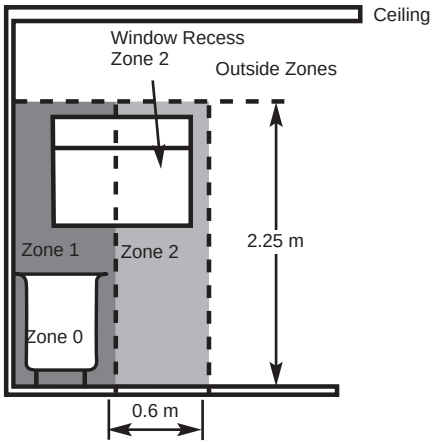

Fig. B In GB Only

5.3.4 Ventilation

1. Where the appliance is installed in a cupboard or compartment, no air vents are required.

2. BS 5440: Part 2 refers to room sealed appliances installed in compartments. The appliance will run sufficiently cool without ventilation.

Examples are shown of the following methods of termination:-
i) to an internal soil & vent pipe
ii) via an internal discharge branch (e.g. sink waste) downstream of the trap
iii) to a drain or gully
iv) to a purpose made soakaway
v) pumped into an internal discharge branch (e.g. sink waste) downstream of the trap
vi) pumped into an external soil & vent pipe
vii) to a drain or gully with extended external run & trace heating

It is strongly recommended to discharge internally into the household drainage system. If connecting to a rain water drain, that drain MUST discharge into a foul drain.

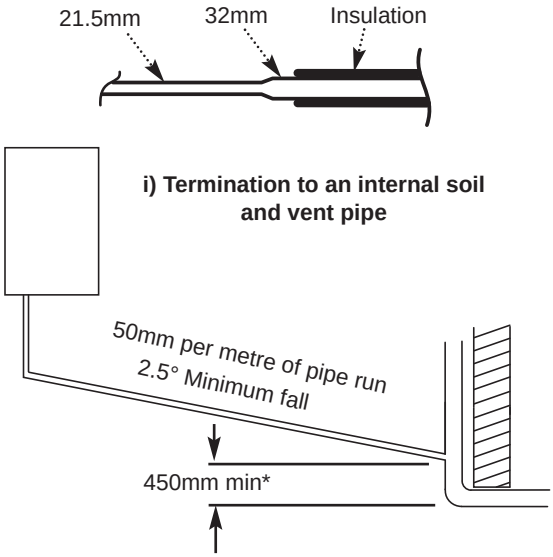

*450mm is applicable to properties up to 3 storeys.
For multi-storey building installations consult BS 6798.

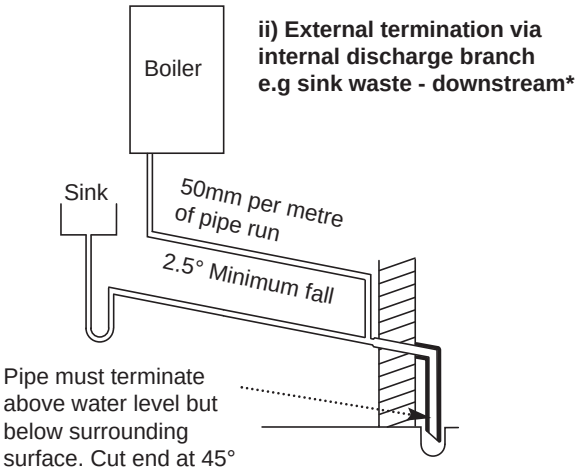

*It is NOT RECOMMENDED to connect upstream of the sink or other waste water receptacle !

5.3.5 Condensate Drain

FAILURE TO INSTALL THE CONDENSATE DISCHARGE PIPEWORK CORRECTLY WILL AFFECT THE RELIABLE OPERATION OF THE BOILER.

CAREFUL CONSIDERATION MUST BE GIVEN TO THE POSSIBILITY OF THE PIPEWORK BEING SUBJECT TO FREEZING CONDITIONS AND APPROPRIATE MEASURES TAKEN TO PREVENT BLOCKAGE. CORRECT INSTALLATION IN ACCORDANCE WITH THIS SECTION WILL CONSIDERABLY MINIMISE THE LIKELIHOOD OF BLOCKAGE AND SUBSEQUENT BOILER LOCK-OUT.

A CONDENSATE DISCHARGE PUMP AND PIPE 'TRACE HEATING' ARE AVAILABLE AS ACCESSORIES - see paragraphs 5.3.5.12 to 5.3.5.15 for further details.

The condensate discharge pipe MUST NOT RISE at any point along its length. There MUST be a fall of AT LEAST 2.5° (50mm per metre) along the entire run EXCEPT when employing a suitable condensate pump in basement and cellar or similar applications.

The boiler condensate trap incorporates a water seal of 75mm, therefore it is unnecessary to install an additional air break and trap in the discharge pipework.

1. The condensate outlet will accept 21.5mm (3/4in) plastic overflow pipe. **It is strongly recommended that this discharges internally into the household drainage system.** Where this is not possible, discharge into an outside drain is permissible providing every possible precaution is taken to prevent freezing.

2. Ensure the discharge of condensate complies with any national or local regulations in force. **BS 6798 & Part H1 of the Building Regulations give further detailed guidance.**

3. The discharge pipe should be run in a proprietary drain pipe material e.g. PVC, PVC-U, ABS, PVC-C or PP.

4. Metal pipework is NOT suitable for use in condensate discharge systems.

5. The pipe should be a minimum of 21.5mm diameter and must be supported using suitably spaced clips of the correct design to prevent sagging.

6. **It is advisable that the full length of condensate pipe is run internally and preferably be less than 3 metres.**

7. **Internal runs greater than 3 metres or runs in cold areas should use 32mm waste pipe.**

8. **External runs MUST be a MINIMUM of 32mm and fully insulated with material suitable for external use.**

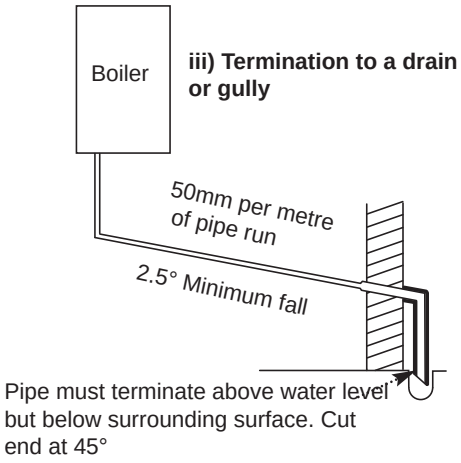

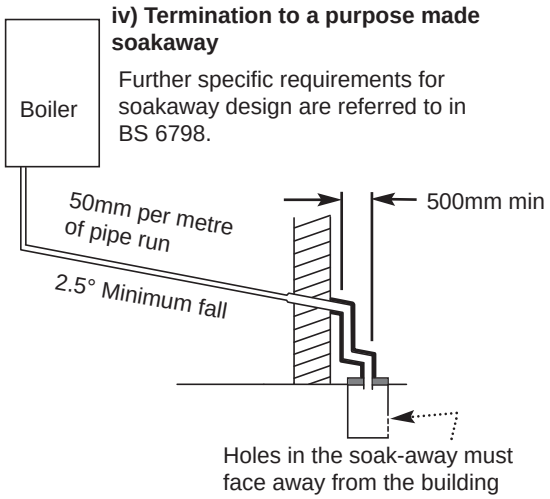

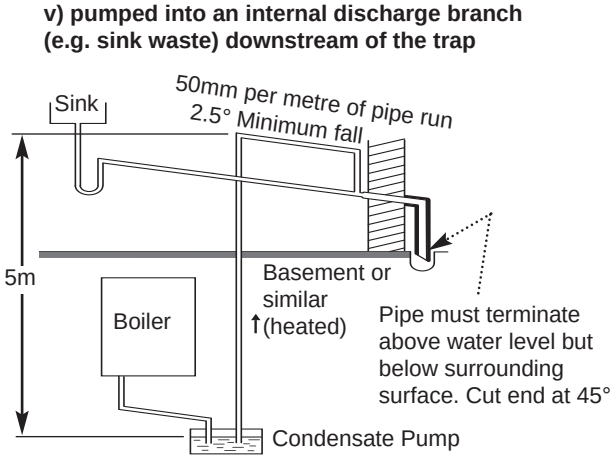

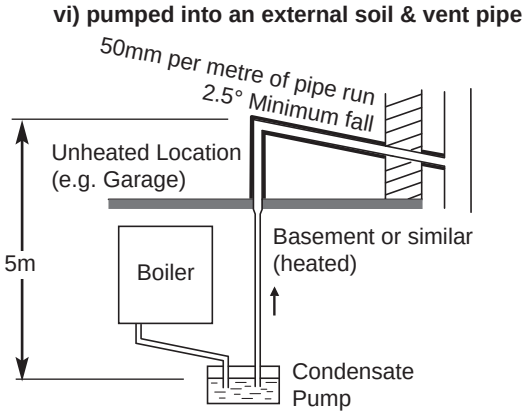

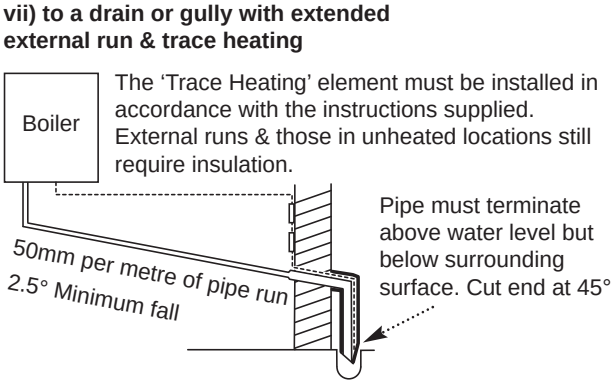

9. If the boiler is fitted in an unheated location the entire condensate discharge pipe should be treated as an external run and sized and insulated accordingly.

10. In all cases discharge pipe must be installed to aid disposal of the condensate. To reduce the risk of condensate being trapped, as few bends and fittings as possible should be used and any burrs on cut pipe removed.

11. When discharging condensate into a soil stack or waste pipe the effects of existing plumbing must be considered. If soil pipes or waste pipes are subjected to internal pressure fluctuations when WC's are flushed or sinks emptied then back-pressure may force water out of the boiler trap and cause appliance lockout.

12. A boiler discharge pump is available, 'MULTIFIT' part no. 720648301. This pump will dispose of both condensate & high temperature water from the relief valve. It has a maximum head of 5 metres. Follow the instructions supplied with the pump.

13. Condensate Drain Pipe 'Trace Heating' Elements are available in various lengths. 'MULTIFIT' part nos.:-

1 metre 720644401
2 metre 720664101
3 metre 720664201
5 metre 720664401*

*Where the drain is between 3 & 5 metres a 5 metre kit can be used and "doubled back" upon itself.

14. It is possible to fit the element externally on the condensate drain or internally as detailed in the instructions provided.

15. The fitting of a 'Trace Heating' Element is NOT a substitute for correct installation of the condensate drain. ALL requirements in this section must still be adhered to.

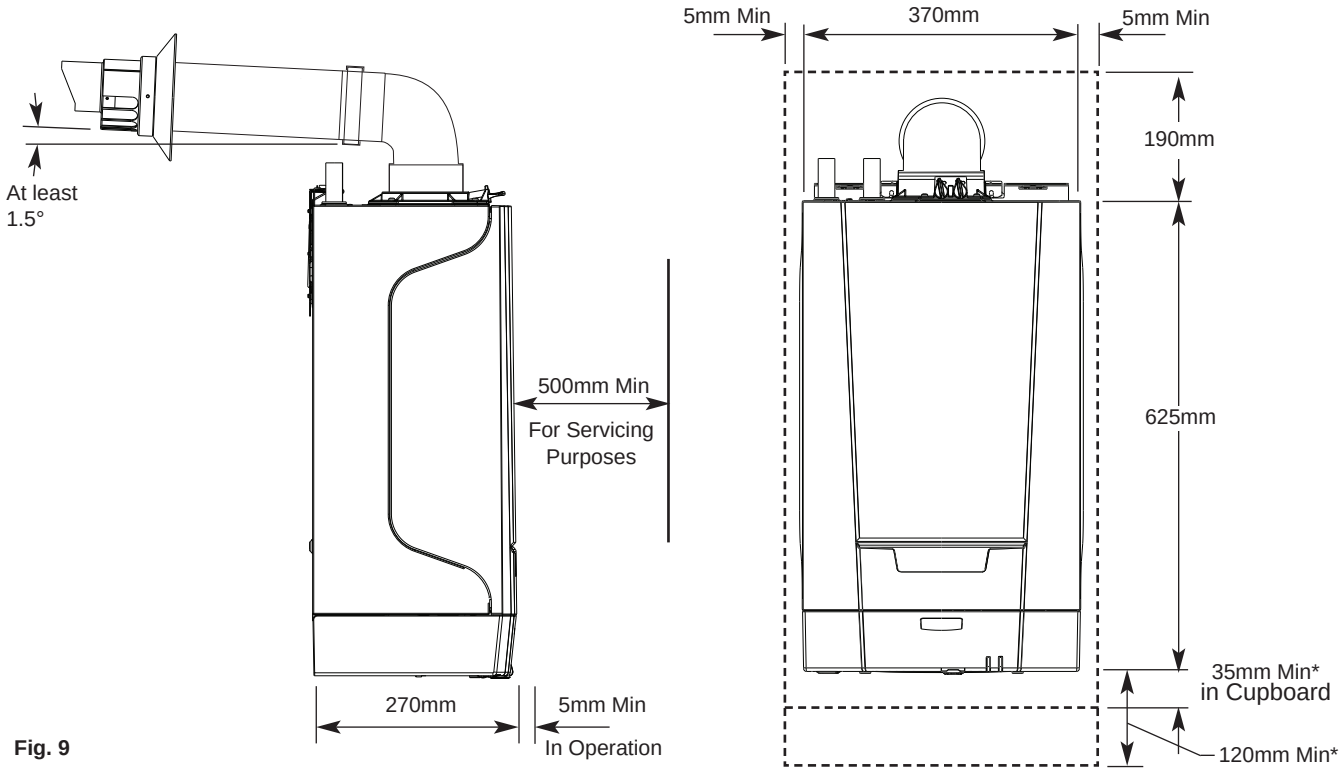

Fig. 9

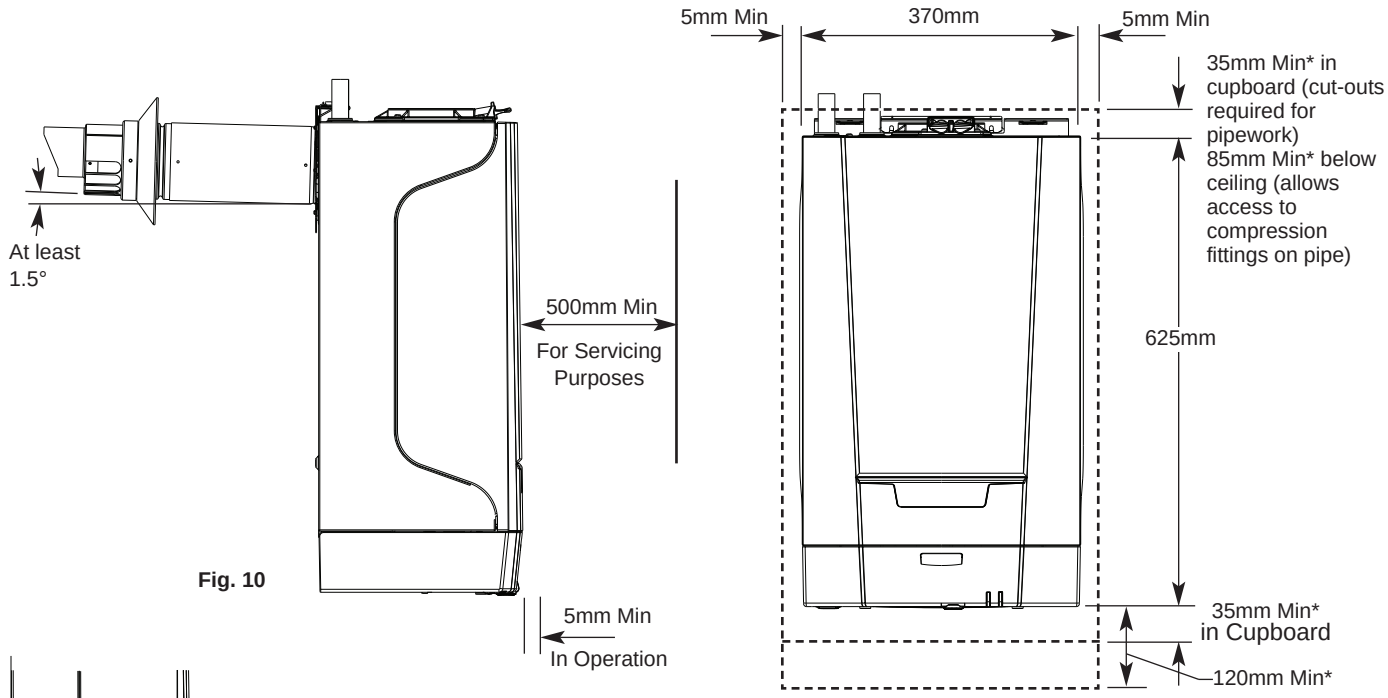

Fig. 10

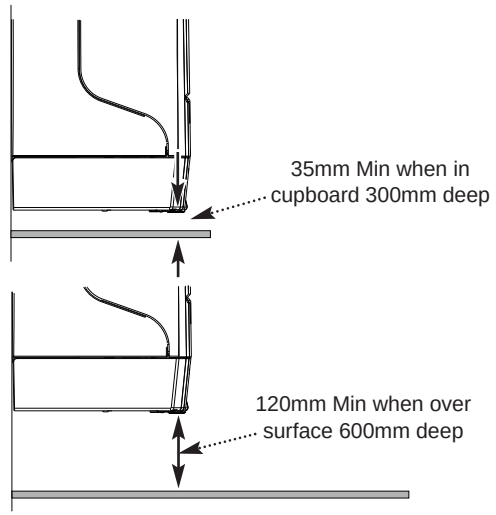

5.3.6 Clearances - Access in Service

1. A flat vertical area is required for the installation of the boiler.

2. These dimensions include the necessary clearances around the boiler for case removal, spanner access and air movement (Figs. 9 & 10). Additional clearances may be required for the passage of pipes around local obstructions such as joists running parallel to the front face of the boiler.

*These are MINIMUM recommended dimensions. Greater clearance will aid installation and maintenance.

5.3.7 Flue/Chimney Location

1. The following guidelines indicate the general requirements for siting balanced flue terminals. For GB recommendations are given in BS 5440 Pt 1. For IE recommendations are given in the current edition of I.S. 813 “Domestic Gas Installations”.

Under car ports we recommend the use of the plume displacement kit.
The terminal position must ensure the safe and nuisance - free dispersal of combustion products.

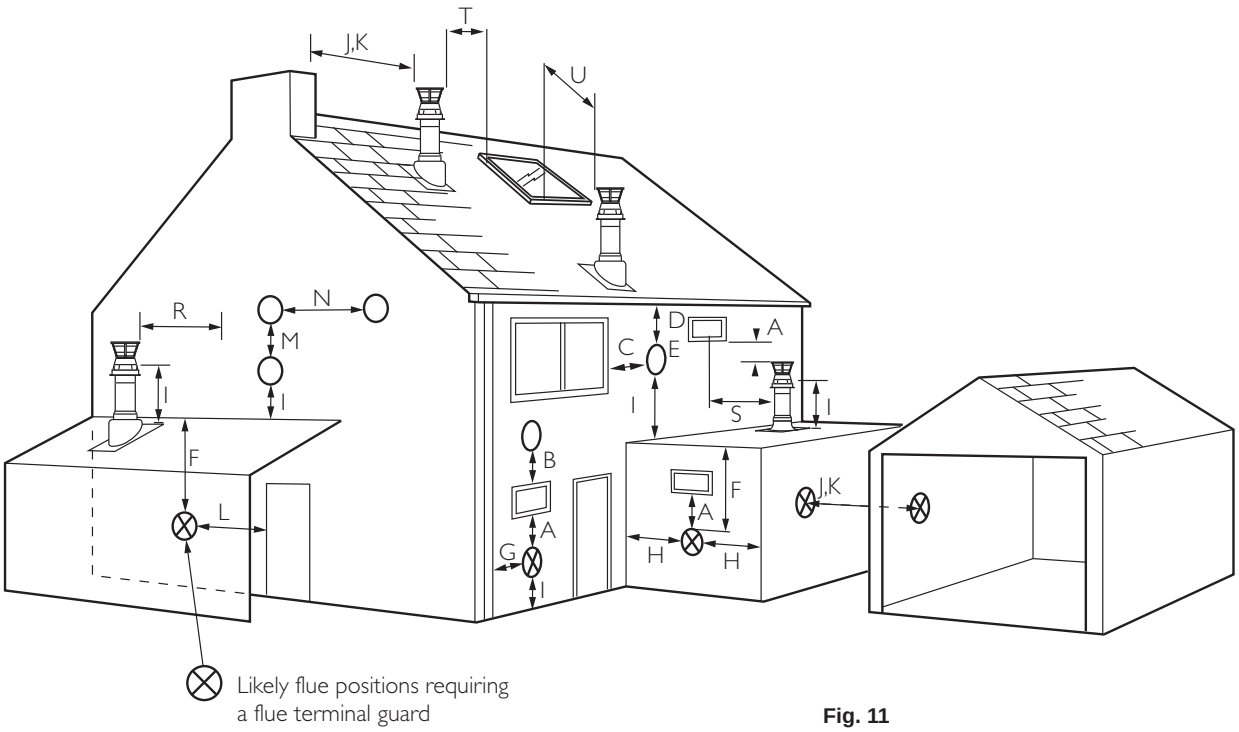

Fig. 11

	Terminal Position with Minimum Distance (Fig. 11)	(mm)
A[1]	Directly below an opening, air brick, opening windows, etc.	300
B[1]	Above an opening, air brick, opening window etc.	300
C[1]	Horizontally to an opening, air brick, opening window etc.	300
D[2]	Below gutters, soil pipes or drain pipes.	25 (75)
E[2]	Below eaves.	25 (200)
F[2]	Below balconies or car port roof.	25 (200)
G[2]	From a vertical drain pipe or soil pipe.	25 (150)
H[2]	From an internal or external corner.	25 (300)
I	Above ground, roof or balcony level.	300
J	From a surface or boundary line facing a terminal.	600
K	From a terminal facing a terminal (Horizontal flue).	1200
	From a terminal facing a terminal (Vertical flue).	600
L	From an opening in carport (e.g. door, window) into the dwelling.	1200
M	Vertically from a terminal on the same wall.	1500
N	Horizontally from a terminal on the same wall.	300
R	From adjacent wall to flue (vertical only).	300
S	From an adjacent opening window (vertical only).	1000
T	Adjacent to windows or openings on pitched and flat roofs	600
U	Below windows or openings on pitched roofs	2000

[1] In addition, the terminal should be no nearer than 150 mm to an opening in the building fabric formed for the purpose of accommodating a built-in element such as a window frame.

[2] Only **ONE** 25mm clearance is allowed per installation. If one of the dimensions D, E, F, G or H is 25mm then the remainder **MUST** be as shown in brackets, in accordance with B.S.5440-1.

Due to the nature of the boiler a plume of water vapour will be discharged from the flue. This should be taken into account when siting the flue terminal.

2. If the terminal discharges onto a pathway or passageway, check that combustion products will not cause a nuisance and that the terminal will not obstruct the passageway.

3. If a terminal is less than 2 metres above a balcony, above ground or above a flat roof to which people have access, then a suitable terminal guard must be provided.

*4. The distance from a fanned draught appliance terminal installed parallel to a boundary may not be less than 300mm in accordance with the diagram opposite (Fig. 12).

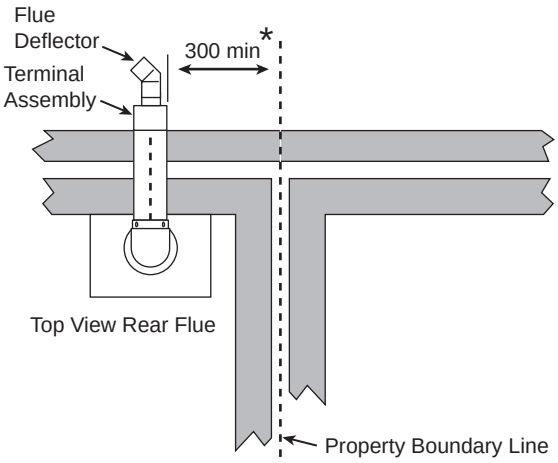

Fig. 12

Reduction to the boundary is possible down to 25mm but the flue deflector kit or the appropriate Plume Displacement Kit must be used. The nuisance factor must still be taken into account when these options are being considered.

If fitting a Plume Displacement Flue Kit, the air inlet must be a minimum of 150mm from any opening windows or doors (Fig. 13).

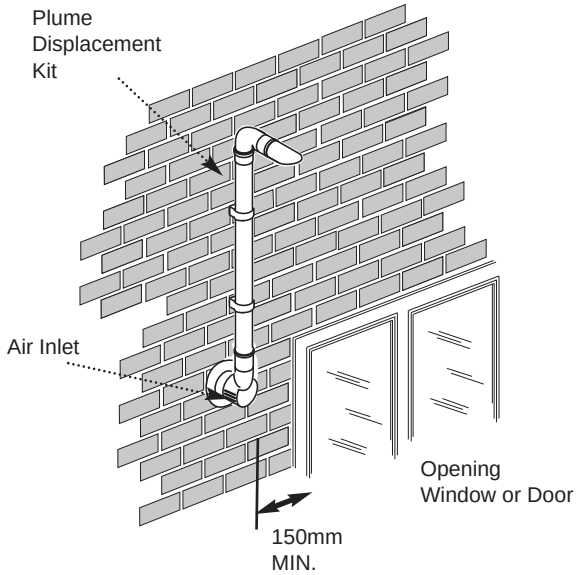

Fig. 13

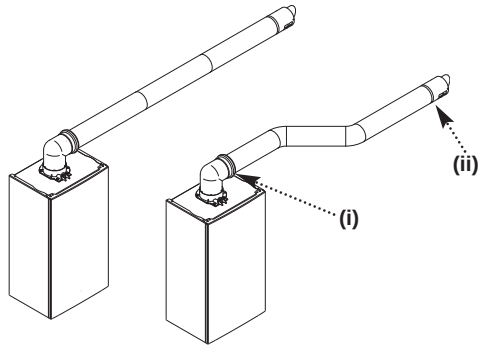

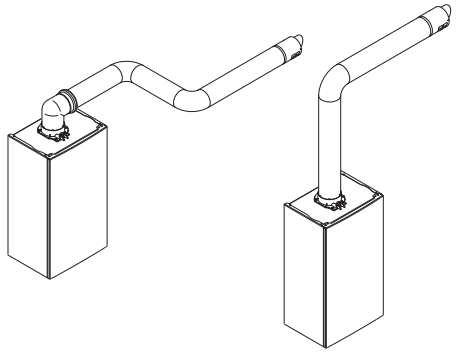

Horizontal Flues

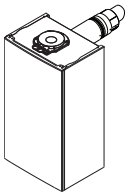

In Case Rear Flue

5.3.8 Horizontal Flue/Chimney Systems

1. The standard telescopic flue is suitable only for horizontal termination applications. It allows for lengths between 315mm and 500mm from elbow to terminal without the need for cutting (Fig. 14). Extensions of 250mm, 500mm & 1m are available.

2. All fittings should be fully engaged. The approximate engagement is 40mm. Apply the lubricant supplied to the seal on each fitting to aid assembly.

3. Maximum permissible Horizontal Concentric equivalent flue lengths are:-

(60/100)	(80/125)
6 metres	12 metres

4. Any additional “in line” bends in the flue system must be taken into consideration. Their equivalent lengths are:-

135° bend	0.5 metres
93° bend	1.0 metres

5. The elbow supplied with the standard horizontal telescopic flue kit is not included in any equivalent length calculations.

Flue length is measured from point (i) to (ii) as shown below.

Read this section in conjunction with the Flue Accessories & Fitting Guide supplied with the boiler. That document includes details of vertical flue/chimney systems and Plume Displacement Kits.

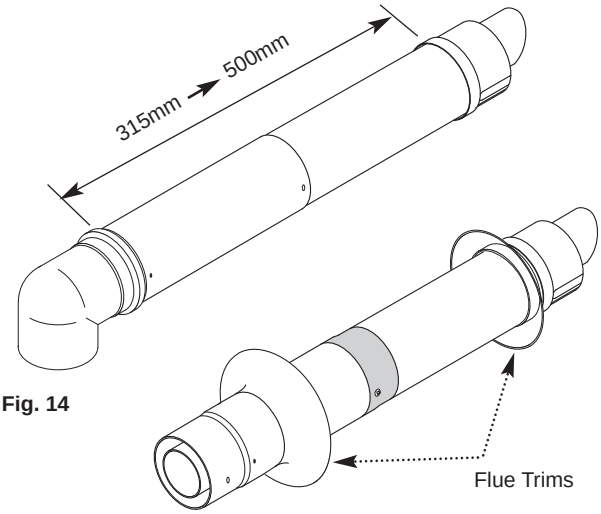

Fig. 14

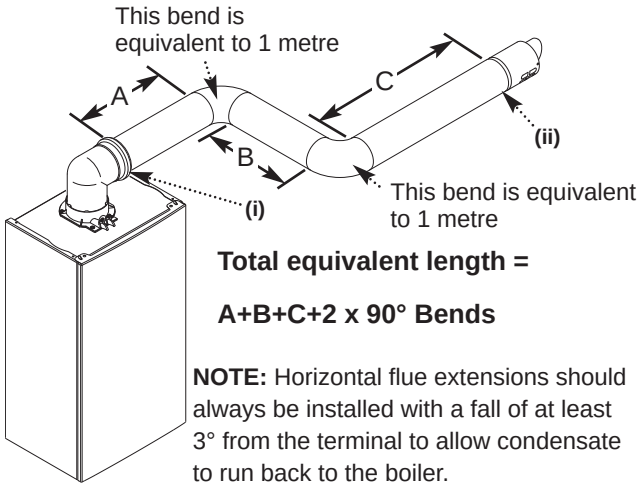

Total equivalent length =

A+B+C+2 x 90° Bends

NOTE: Horizontal flue extensions should always be installed with a fall of at least 3° from the terminal to allow condensate to run back to the boiler.

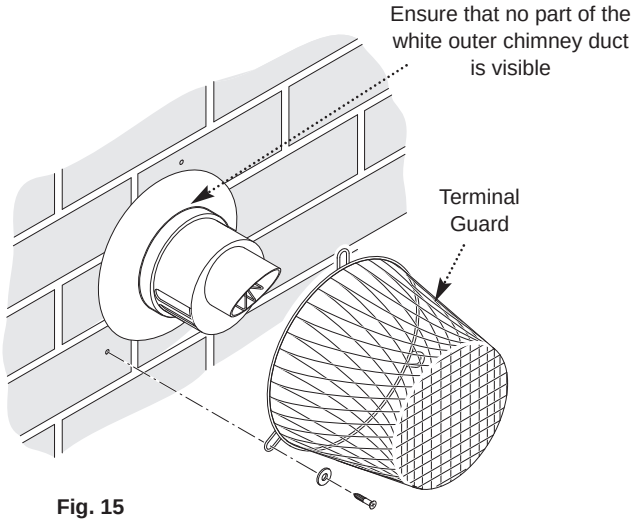

Fig. 15

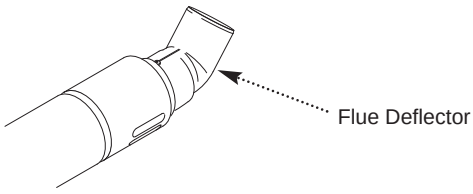

Fig. 16

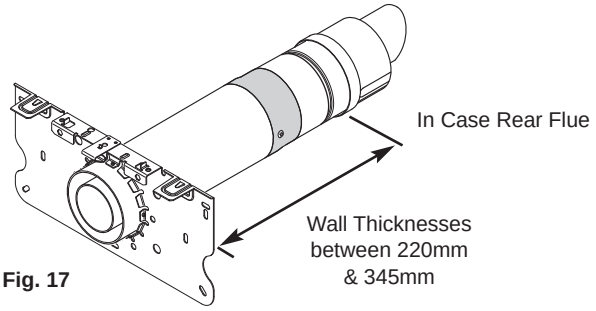

Fig. 17

5.3.9 Flue/Chimney Trim

1. The flexible flue trims supplied can be fitted on the outer and inner faces of the wall of installation (Fig. 14).

5.3.10 Terminal Guard

1. When codes of practice dictate the use of terminal guards (Fig. 15) 'Multifit' accessory part no. 720627901 can be used (**NOTE:** This is not compatible with Flue Deflector referred too below).

2. There must be a clearance of at least 50mm between any part of the terminal and the guard.

3. When ordering a terminal guard, quote the appliance name and model number.

4. The flue terminal guard should be positioned centrally over the terminal and fixed as illustrated.

5.3.11 Flue/Chimney Deflector

1. Push the flue deflector over the terminal end. It may point upwards as shown, or up to 45° either way from vertical. Secure the deflector to the terminal with screws provided (Fig. 16).

5.3.12 Flue/Chimney Accessories

☞ For full details of Flue Accessories (elbows, extensions, clamps etc.) refer to the Flue Accessories & Fitting Guide supplied in the literature pack.

5.3.13 In Case Rear Flue

1. For more detail on in case rear flue (Fig. 17) see Section 6.1.2. This flue accommodates wall thicknesses between 220mm & 345mm.

⚠ **WARNING**

SUPPORT - All flue systems MUST be securely supported, a MINIMUM of once every metre and at each change of direction. It is recommended that every straight piece is supported irrespective of length. Additional supports are available as accessories.
VOIDS - Consideration must be given to flue systems in voids and the provision of adequate access for subsequent periodic visual inspection.

5.4 Unpacking & Initial Preparation

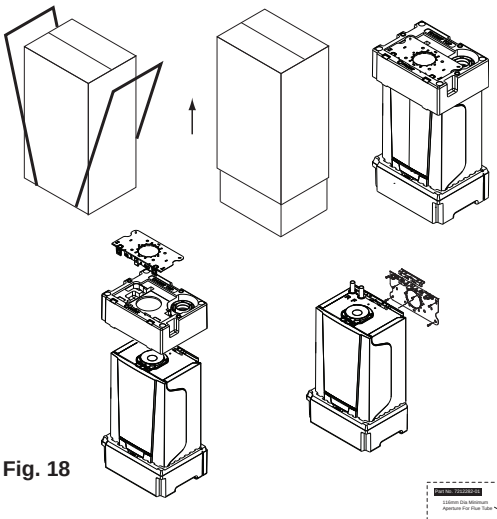

Fig. 18

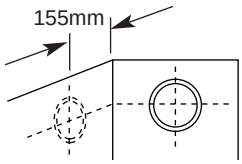

For Side Flue Exit

Fig. 19

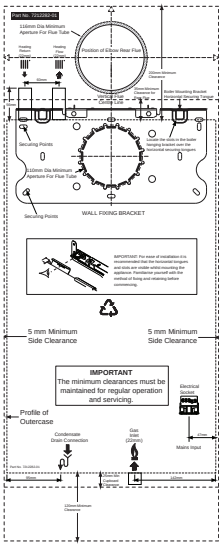

Fig. 20

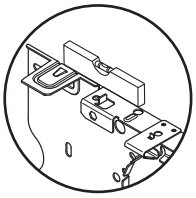

Fig. 21

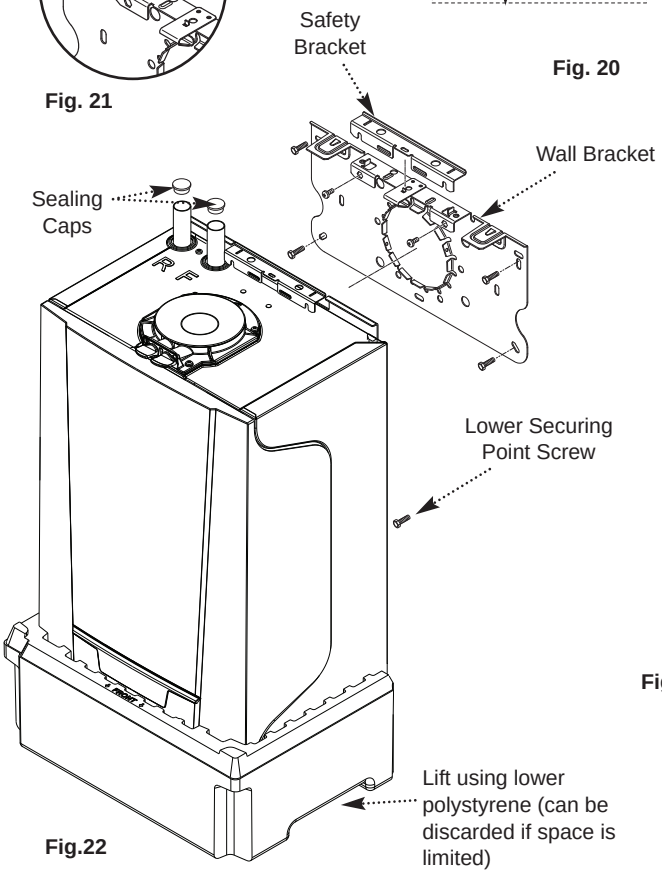

Fig.22

5.4.1 Unpacking

1. Follow the procedure on the carton to unpack the boiler (Fig. 18). See Section 2.3.1 Handling before lifting the boiler.

5.4.2 Initial Preparation

1. After considering the site requirements, position the fixing template on the wall ensuring it is level both horizontally and vertically (Fig. 20).

2. Mark the position of the four most suitable fixing slots for the wall bracket, the lower securing point and the position of the centre of the flue hole whether rear, top or side flue.

3. If required, mark the position of the gas and water pipes, and the electrical supply. Remove the template.

4. Cut the hole for the required flue position (rear, top or side) using a minimum diameter of 116mm.

For 'In Case' rear flue installation the flue must be set to size and secured to the wall bracket before the boiler is fitted (see Section 6.1.2).

5. Drill the wall as previously marked to accept suitable wall plugs. Secure the wall bracket using appropriate fixing screws.

6. Using a spirit level ensure that the bracket is level before finally tightening the screws (Fig. 21).

7. For top flue installation, the flue can be fitted after the boiler has been fitted to the wall bracket (see Section 6.1).

If the boiler is being fitted in a cupboard or other place where clearance underneath will be at the minimum 35mm (see Section 5.3.6) all soldering and pipework should be completed prior to installation. Also the lower panel retaining cords can be dispensed with - See Section 10.2 for removal of the lower panel - the cords can then be disconnected.

8. Lift the boiler using the lower polystyrene packing and locate the slots in the wall bracket over the horizontal tongues on the wall plate. As the boiler is pushed back the wall plate spring latch will positively engage over the wall mounted bracket (Figs. AA, BB & CC).

9. Locate the slots in the safety bracket over the two vertical tongues on the wall bracket and secure with the two screws (Fig CC). Adjust the jack screw to ensure the boiler is fully vertical and then insert the lower securing screw.

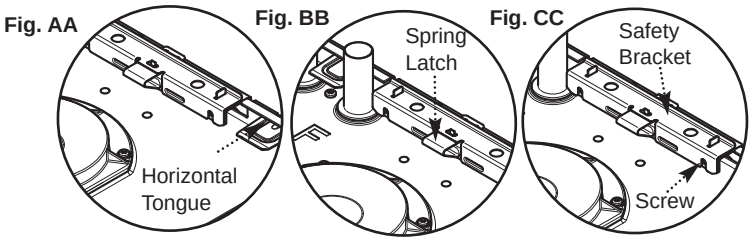

5.4.3 Making the Water Connections (Fig. 22)

1. There are two water connections at the top of the boiler. The left connection is the return pipe (indicated with blue label) and the flow the right hand one (indicated with red label). Remove the sealing caps from the boiler connections.

2. It is essential that the flow and return pipes are connected to the boiler correctly. The boiler connections will accept 22mm compression fittings. Capillary solder fittings MUST NOT be used. For a top flue installation make sure the water connections do not clash with the flue position.

When soldering of joints is to be performed under the boiler the condensate trap must be removed to prevent damage.

5.4.4 Filling the Condensate Trap (Fig. 23)

1. The condensate trap must be filled with water before the boiler is commissioned.

2. Undo the securing screws and remove the facia panel with the User Interaction Controller.

3. Disengage the condensate trap securing clip by pulling forwards and hinging upwards (Fig. 23a). Carefully pull out the trap and remove and discard the sealing cap.

4. The condensate trap must be primed by filling with tap water to a depth of approximately 75mm.

5. Carefully relocate the condensate trap in the boiler ensuring all seals are located properly and re-engage the securing clip (Fig. 23b).

6. If necessary remove the boiler front panel to inspect that the seals are located properly and refit the facia panel with the User Interaction Controller.

5.4.5 Connecting the Condensate Drain (Fig. 23)

1. Using the 90° rubber hose supplied, connect the condensate drain pipework to the boiler condensate trap outlet pipe.

Ensure the discharge of condensate complies with any national or local regulations in force (see British Gas “Guidance Notes for the Installation of Domestic Gas Condensing Boilers” & HHIC recommendations) and Section 5.3.5. The pipework should be supported at least every 0.5M and where a change of direction occurs, e.g. an elbow

2. The hose will accept 21.5mm (3/4in) plastic overflow pipe which should generally discharge internally into the household drainage system. If this is not possible, discharge into an outside drain is acceptable.

5.4.6 Connecting the Gas Supply (Fig. 23c)

1. The elbow and nut assembly supplied must be used to connect to the gas supply. The flared end of the elbow is 22mm O.D.

2. Engage the nut onto the gas cock, ensuring that the sealing washer is in place. Tighten the nut.

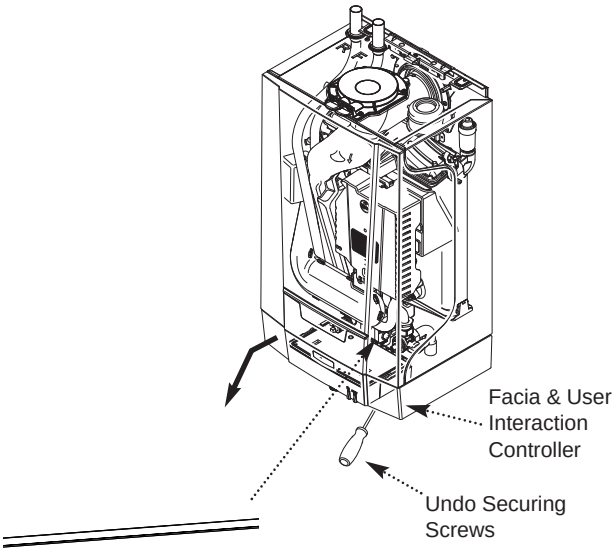

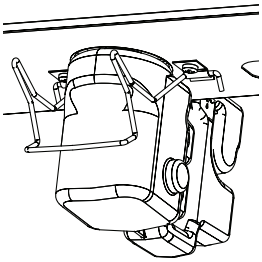

Trap Securing Clip Disengaged

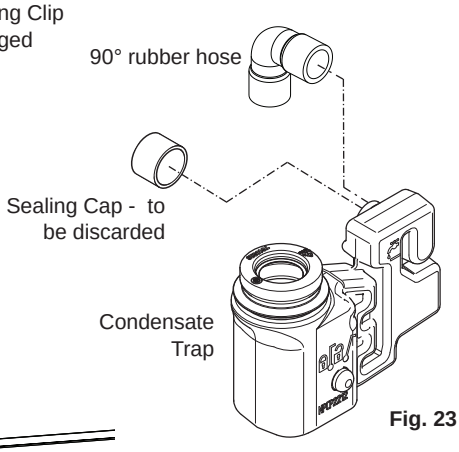

Fig. 23

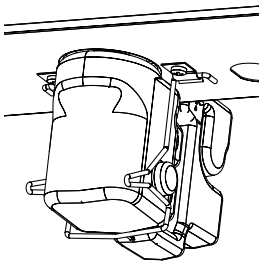

Fig. 23b

Trap Securing Clip Engaged

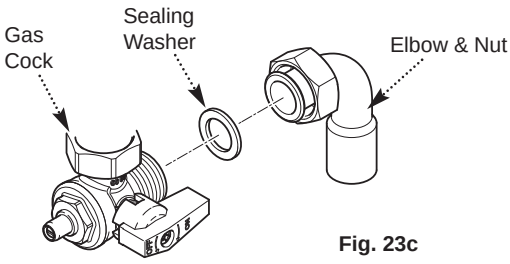

Fig. 23c

6 Installation

6.1 Air Supply / Flue Gas Connections

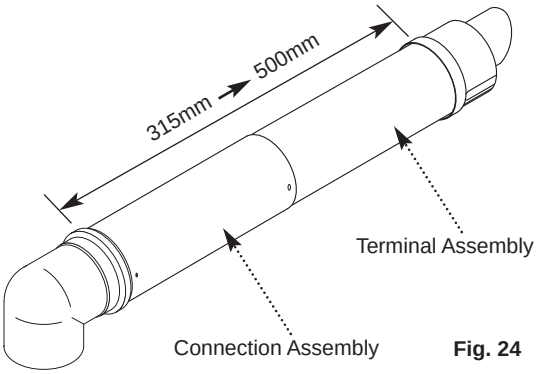

Fig. 24

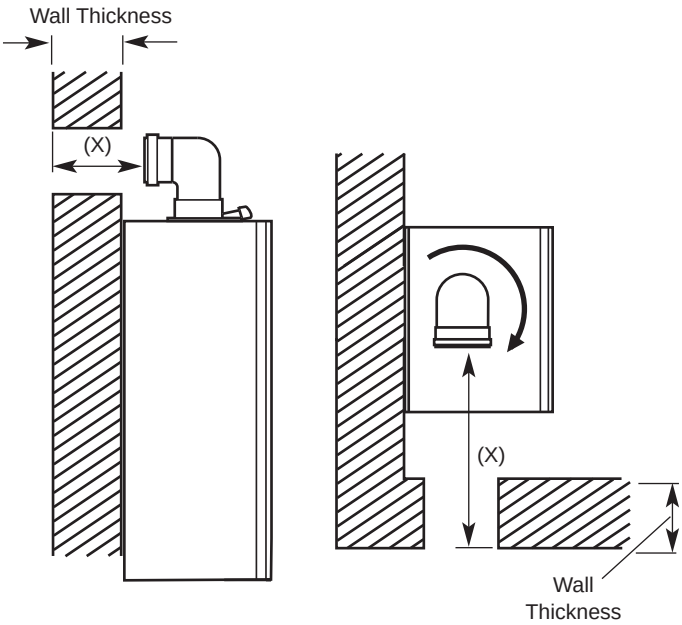

Fig. 25

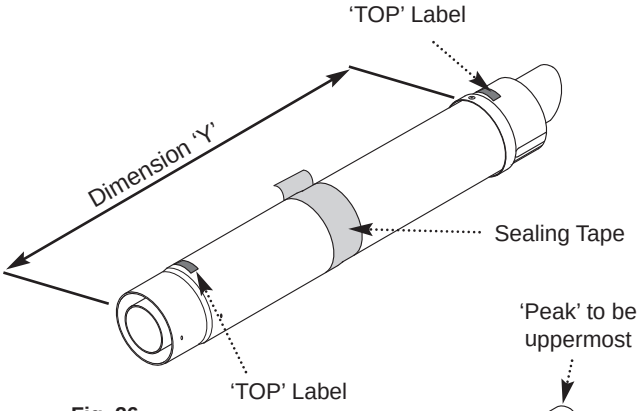

Fig. 26

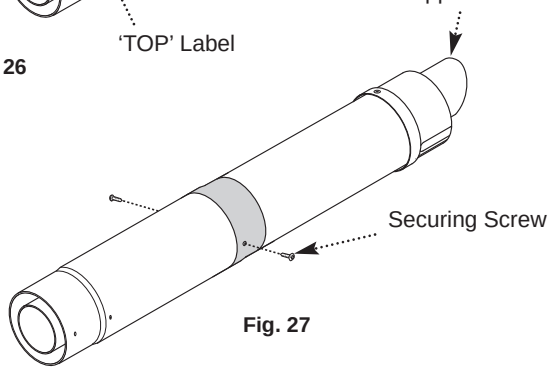

Fig. 27

6.1.1 Connecting the Top Flue

HORIZONTAL TELESCOPIC FLUE

1. There are two telescopic sections, the Terminal Assembly and the Connection Assembly, a roll of sealing tape and two self tapping screws. A 93° elbow is also supplied.

2. The two sections can be adjusted to provide a length between 315mm and 500mm (Fig. 24) when measured from the flue elbow (there is 40mm engagement into the elbow).

3. Locate the flue elbow on the adaptor at the top of the boiler. Set the elbow to the required orientation (Fig. 25).

The flue elbow is angled at 93 degrees to ensure a fall back to the boiler.

4. Measure the distance from the outside wall face to the elbow. This dimension will be known as 'X' (Fig. 25).

5. If the distance from the flue elbow to the outside face of the wall ('X' in Fig. 25) is less than 250mm the Connection Assembly can be discarded and the Terminal Assembly fitted directly into the elbow.

6. In instances where the dimension 'X' (Fig. 25) is between 250mm and 315mm it will be necessary to shorten the Terminal Assembly by careful cutting to accommodate walls of these thicknesses.

7. To dimension 'X' add 40mm. This dimension to be known as 'Y'.

8. Adjust the two telescopic sections to dimension 'Y' and seal the joint with the tape provided (Fig. 26). Ensure that the labels marked 'TOP' on the Terminal and Connection Assemblies are uppermost.

9. Using the clearance holes in the Connection Assembly secure it to the Terminal Assembly using the screws supplied (Fig. 27).

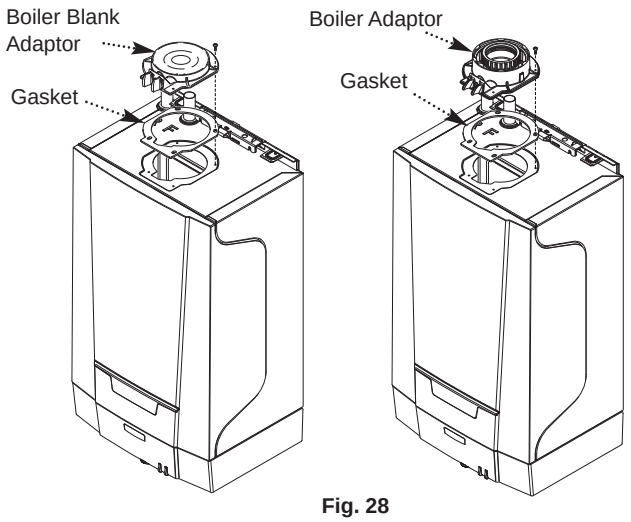

Fig. 28

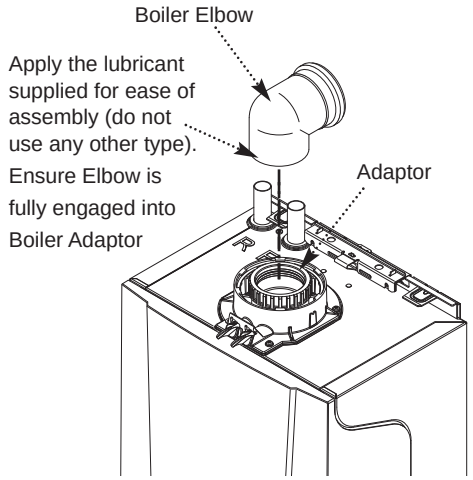

Fig. 29

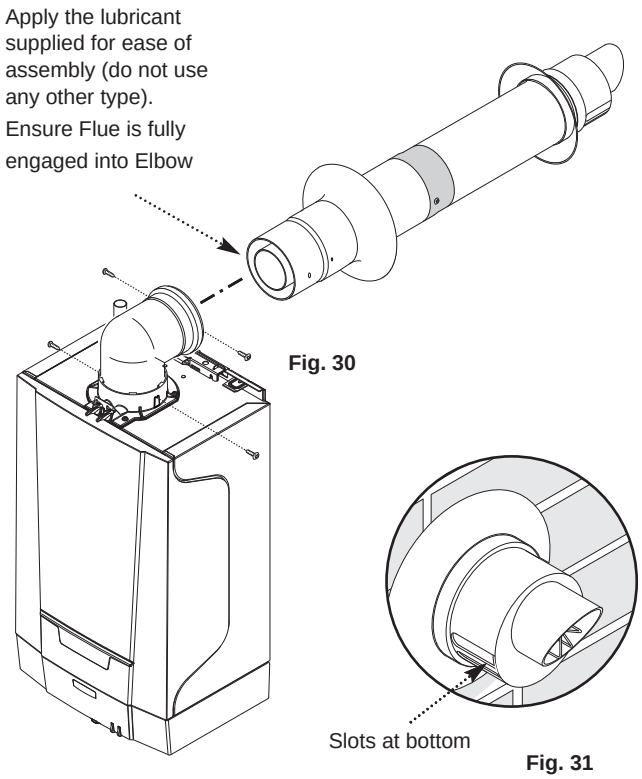

Fig. 30

Fig. 31

10. Remove the boiler blank adaptor and replace with the boiler adaptor ensuring that the gasket is in position. Replace the gasket if necessary (Fig. 28).

11. Insert the flue through the hole in the wall. Fit the elbow to the boiler adaptor, ensuring that it is pushed fully in (Fig. 29).

12. Draw the flue back through the wall and engage it in the elbow. It may be necessary to lubricate to ease assembly of the elbow and flue (Fig. 30).

13. Ensure that the terminal is positioned with the slots to the bottom (Fig. 31). Secure the flue to the elbow with the screws supplied (Fig. 30).

It is essential that the flue terminal is fitted as shown to ensure correct boiler operation and prevent water entering the flue. There must be no part of the air duct (white tube) visible outside the property after installation.

14. Make good between the wall and air duct outside the building, appropriate to the wall construction and fire rating.

15. If necessary fit a terminal guard (see Section 5.3.11).

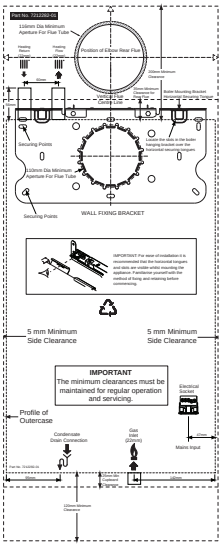

Fig. 33

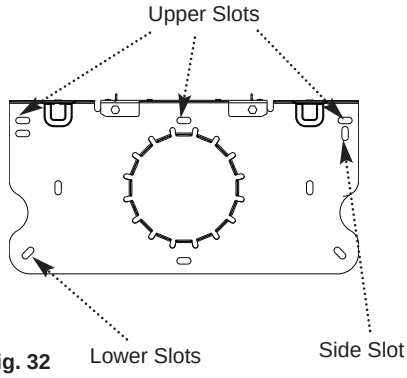

Fig. 32

6.1.2 Connecting the ‘In Case’ Rear Flue

Internal Fitting Kit part no. 7215374 is available for the ‘In Case’ Rear Flue. It can be used where access to ‘make good’ outside is difficult or not possible e.g. blocks of flats.

1. Position the fixing template on the wall ensuring it is level. Mark the position of the most suitable upper fixing slots for the wall bracket (Fig. 33). The two lower slots MUST be used, and it is recommended that the side slot is used where possible (Fig. 32).

2. Mark the position of the centre of the flue hole. If required mark the centrelines of the gas supply, condensate drain and heating flow & return pipes. Remove the template (Fig. 33).

3. Drill and plug the fixing holes, and make a hole Ø110mm for the flue.

4. Measure the wall thickness. This dimension will be known as ‘A’.

5. Insert the telescopic flue into the wall bracket and secure with the three screws (Fig. 34).

6. Measuring from the wall bracket to the edge of the terminal, adjust the telescopic flue to dimension ‘A’, add another 17mm to this dimension (Figs. 34 & 35).

7. Seal the joint with the tape provided and secure with the two screws (Figs. 34 & 35). Apply the self adhesive foam seal to the wall bracket and flue joint to prevent draughts when fitting to a cavity wall (Fig. 35a).

8. Pass the assembled wall bracket and flue through the hole in the wall. Secure the wall bracket using suitable screws, ensuring that the bracket is level before finally tightening the screws (Fig. 36).

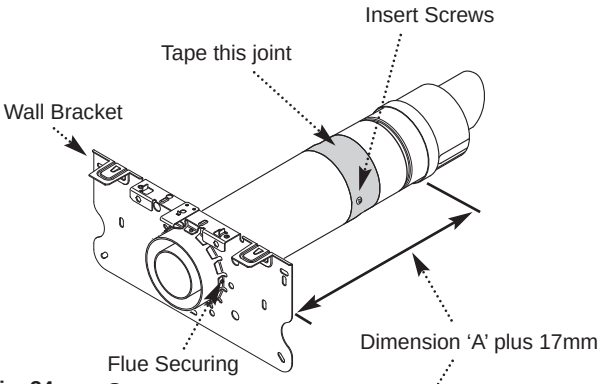

Fig. 34

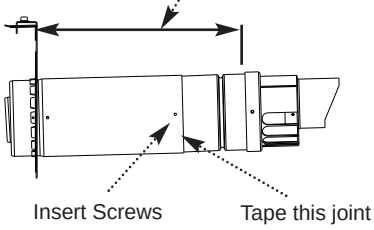

Fig. 35

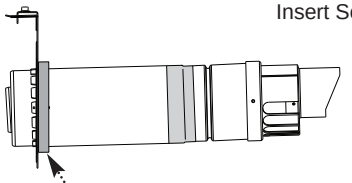

Fig. 35a

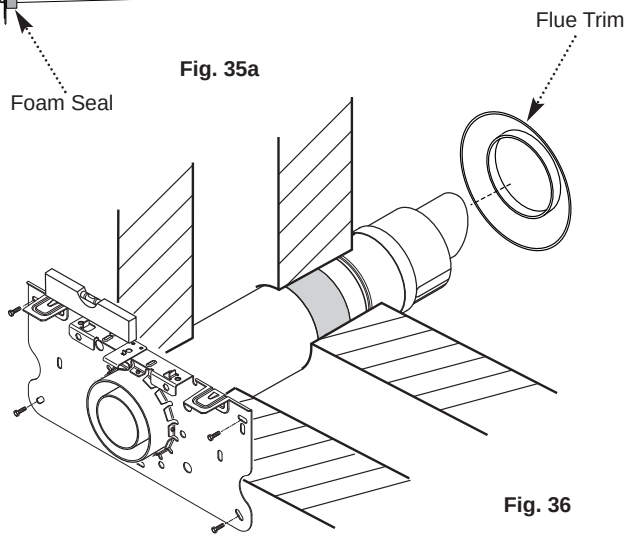

Fig. 36

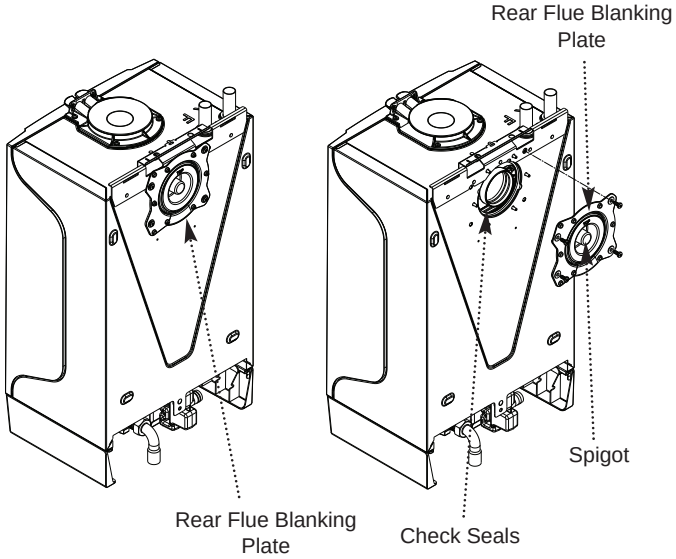

Fig.37

9. Undo the screws securing the rear flue blanking plate. Firmly grip the central spigot and pull the plate off the boiler. Ensure that the flue connection seals remain in place (Fig. 37).

10. Lift the boiler and locate the slots in the wall bracket over the horizontal tongues on the wall bracket. As the boiler is pushed back the wall plate spring latch will positively engage over the wall mounted bracket (Figs. AA, BB & CC).

11. Locate the slots in the safety bracket over the two vertical tongues on the wall bracket and secure with the two screws (Fig 38). Adjust the jack screw to ensure the boiler is fully vertical and then insert the lower securing screw.

12. If required fit the trim supplied over the flue terminal or 'make good' with sealant or cement.

13. Ensure that the terminal is positioned with the slots to the bottom (Fig. 31). Secure the flue to the elbow with the screws supplied (Fig. 30).

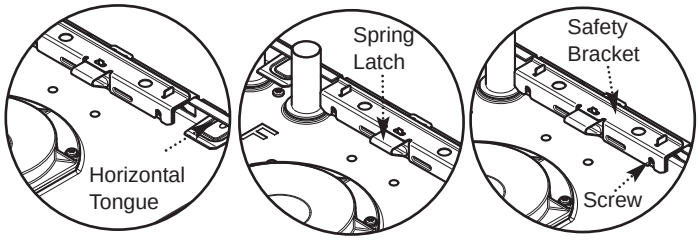

Fig. AA **Fig. BB** **Fig. CC**

It is essential that the flue terminal is fitted as shown to ensure correct boiler operation and prevent water entering the flue. There must be no part of the air duct (white tube) visible outside the property after installation.

14. Make good between the wall and air duct outside the building, appropriate to the wall construction and fire rating.

15. If necessary fit a terminal guard (see Section 5.3.10).

If not already done so, make the water connections, fill the condensate trap, connect the condensate drain and connect the gas supply as described in Sections 5.4.3, 5.4.4, 5.4.5 & 5.4.6 respectively.

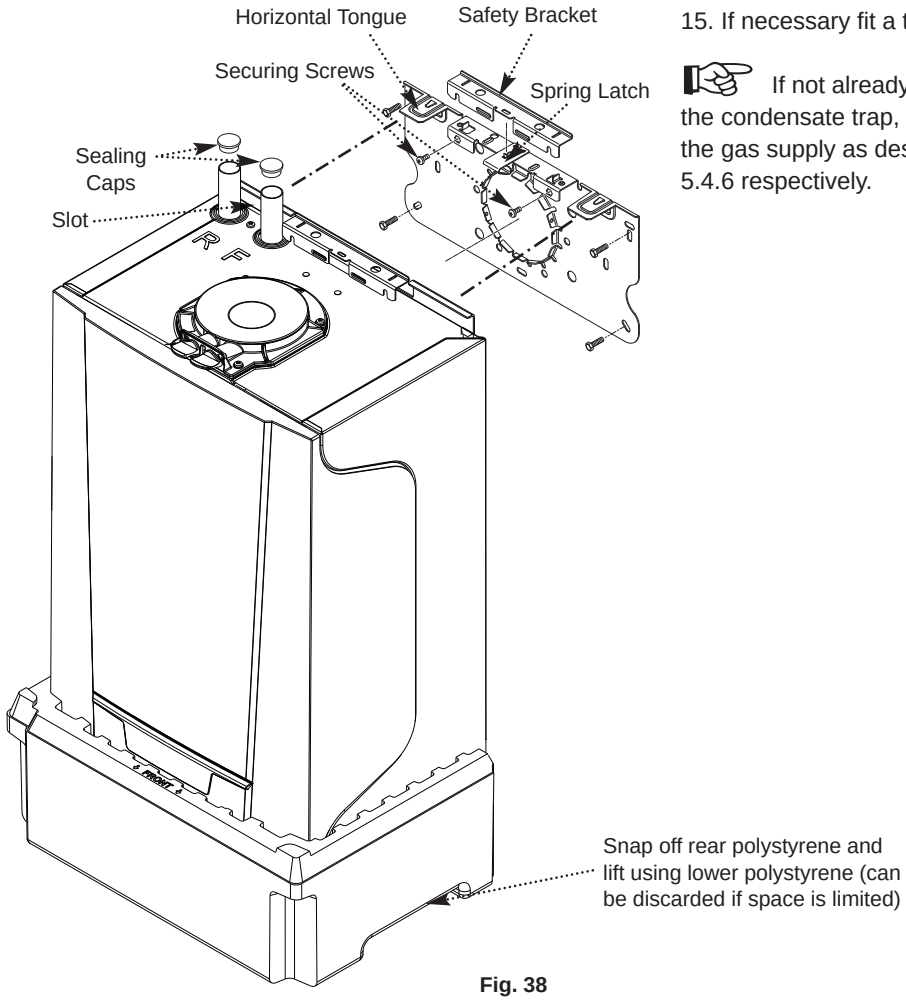

Fig. 38

6.2 Electrical Connections

6.2.1 Electrical Connections of the Appliance

1. See Section 5.2.2. for details of the electrical supply. 1 metre of 3 core cable is supplied connected to the boiler.

2. Switched live must be connected to the brown (live) wire of the 3 core cable.

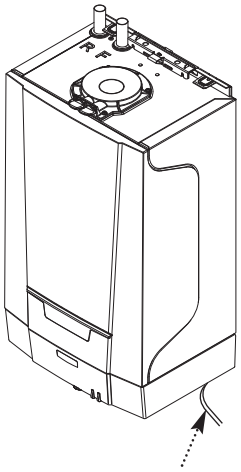

Fig. 39

6.2.2 Connecting External Devices

1. System Controls - This boiler operates on a switched live only.

2. To comply with Part L1 of the Building Regulations the heating system into which the boiler is installed should include the following:

a) Zone Controls
b) Timing Controls
c) Boiler Control Interlocks (Room & Cylinder Thermostats)

3. Such a system needs to be fully pumped and must provide independent temperature and time control to both the heating and hot water circuits.

4. Connection diagrams for Y and S plan systems are shown.

Key to colours

b - Blue
br - Brown
w - White
o - Orange
gr - Grey
g/y - Green/Yellow

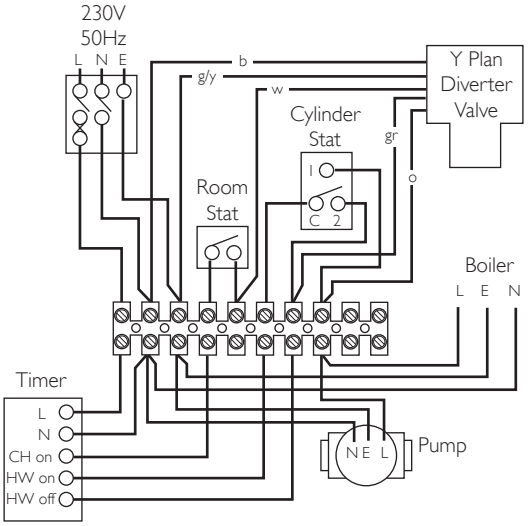

Y Plan, Room Thermostat System, CH Interlocked By Room Thermostat
At least the Radiator(s) near the Room Thermostat not TRV'd
Pump run from Switched Live

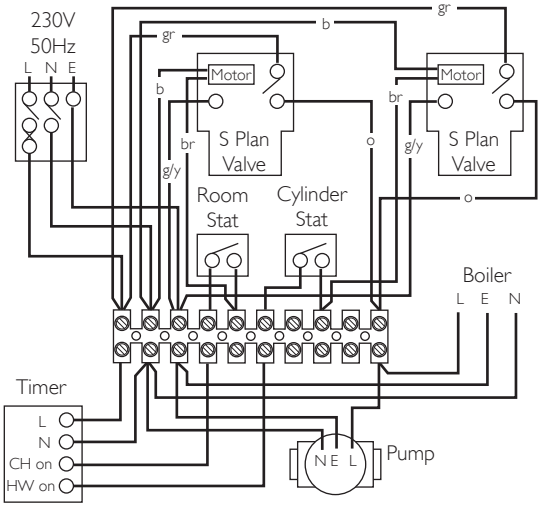

S Plan, Room Thermostat System, CH Interlocked By Room Thermostat
At least the Radiator(s) near the Room Thermostat not TRV'd
Pump run from Switched Live

6.3 Filling the System

See Section 5.2.6. for details of treating the system, Section 5.2.7. for open vent system details, Section 5.2.9. for sealed system details and Section 5.4.4. for filling the condensate trap.

6.4 Completing the Installation

6.4.1 Completion

1. Before turning on the electrical and gas supply to commission the boiler, check that all the installation requirements for the chosen heating system and flue options have been satisfied.

2. Ensure that the system is vented to expel any excess air.

7 Commissioning

7.1 General

1. Reference should be made to BS:EN 12828 & 14336 when commissioning the boiler.

2. At the time of commissioning, complete all relevant sections of the Benchmark Checklist at the rear of this publications.

3. Turn the gas supply on and purge according to in GB BS 6891 and in IE I.S. 813 “Domestic Gas Installations”.

The combustion for this appliance has been checked, adjusted and preset at the factory for operation on the gas type specified on the appliance data plate.

7.2 Checklist before Commissioning

7.2.1 Preliminary Electrical Checks

1. Prior to commissioning preliminary electrical system checks should be carried out.

2. These should be performed using a suitable meter, and include checks for Earth Continuity, Resistance to Earth, Short Circuit and Polarity.

7.2.2 Checks

- ► Check that the boiler has been installed in accordance with these instructions.
- ► Check the integrity of the flue system and the flue seals.
- ► Check the integrity of the boiler combustion circuit and the relevant seals.
- ► Check the integrity of all gas and water joints.

7.3 Commissioning Procedure

CAUTION

On first firing the boiler, an odour may be present for a short period.

1. Open the main gas supply.
2. Open the gas cock on the boiler.
3. Set the controls (thermostats, control system) so that they request heat to turn the boiler on.
4. The boiler incorporates an automatic air vent. As supplied this is in the open position to allow venting of the system.

7.4 Gas Settings

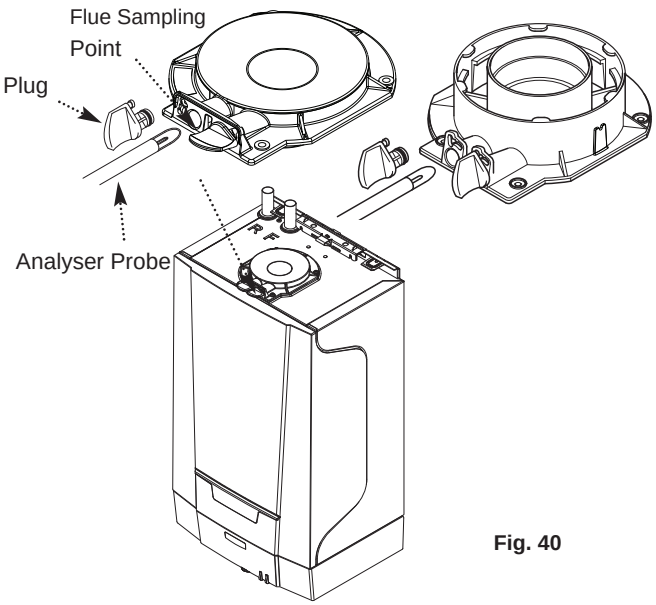

Fig. 40

After refitting the sampling point plug ensure there is no leakage of products !

7.4.1 'Chimney Sweep' Mode (CSM)

1. The current operating condition of the boiler is shown by the button on the User Interaction Controller. The button can flash in a range of colours and at different frequencies.

2. Follow the flow chart on the next page to comply with the requirement to check combustion on commissioning.

3. Setting the boiler to maximum and minimum heat outputs is achieved as follows;

- Press the button for 3 seconds.
- CSM is activated and will go to the min rate.
- Pressing again will make it adjust to max rate.
- To exit press the RESET for 3 seconds.

7.4.2 'Chimney Sweep' Mode - Combustion Check

1. Follow the flow chart opposite.

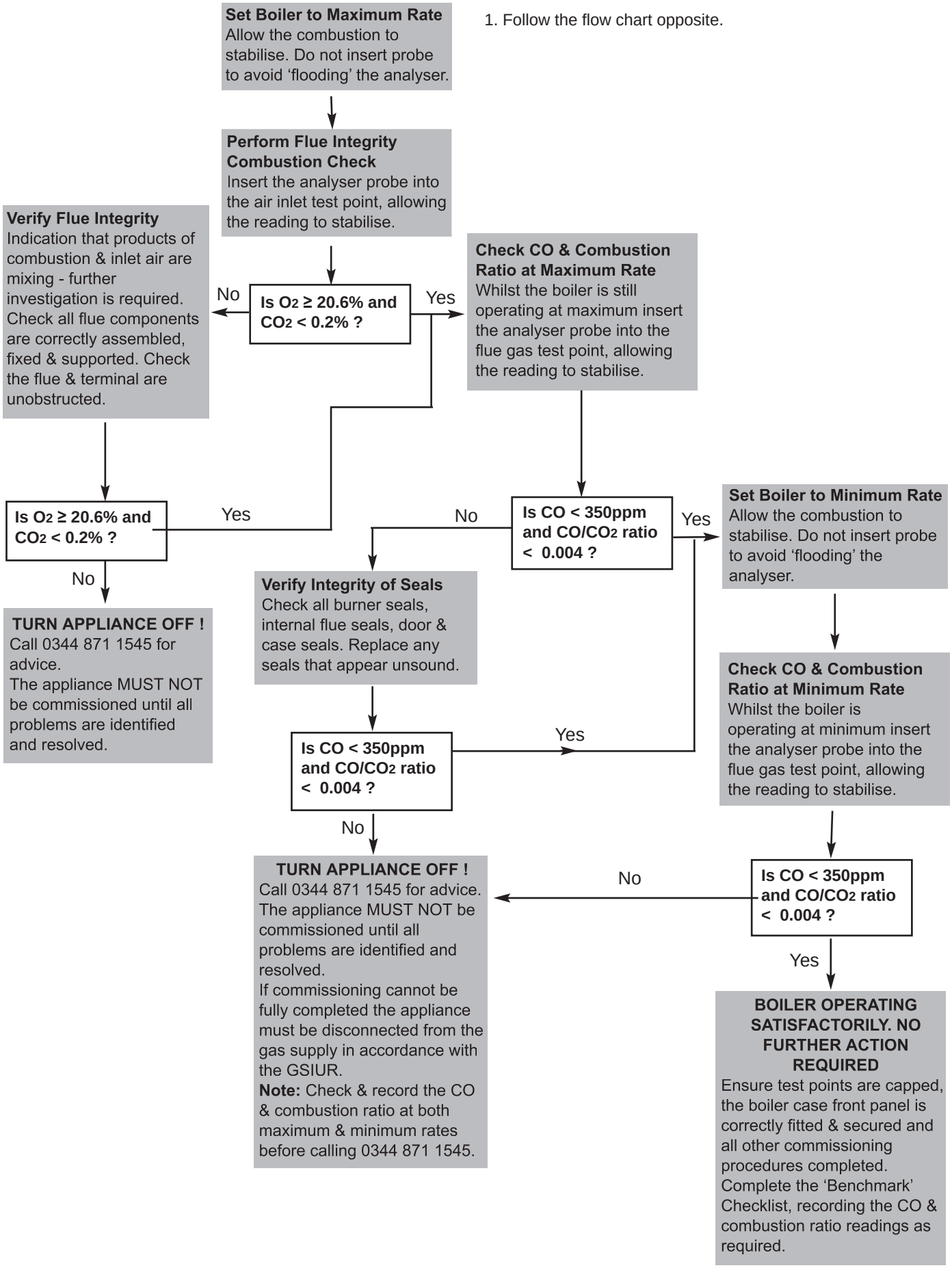

7.5 Configuring the System

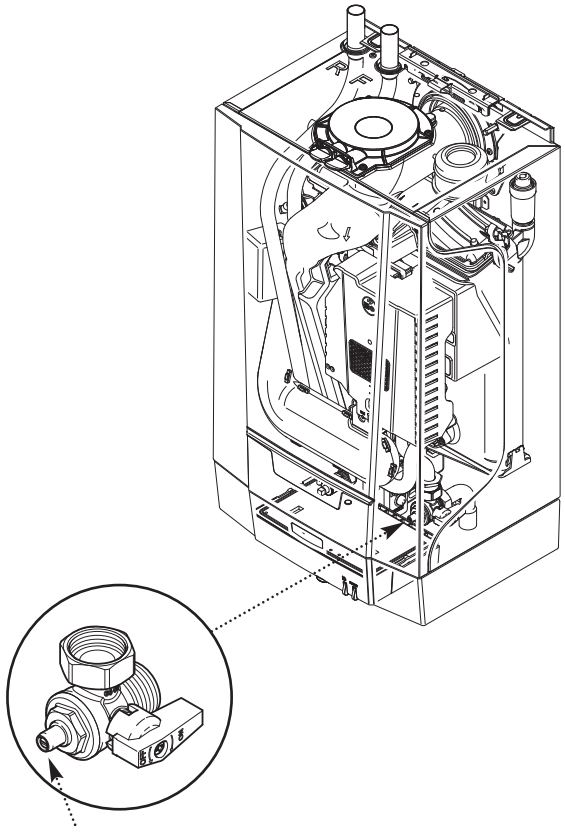

7.5.1 Check the Operational (Working) Gas Inlet Pressure

1. Ensure that all controls are calling for heat and maximum load is applied to the system.

2. With the boiler operating in the maximum rate condition check that the operational (working) gas pressure at the inlet gas pressure test point is in accordance with B.S. 6798 & B.S. 6891. This must be AT LEAST 17mb at the valve & 18mb at the gas cock ! (Fig. 41).

3. Ensure that this inlet pressure can be obtained with all other gas appliances in the property working.

Measure the Gas Rate
4. With any other appliances & pilot lights turned OFF the gas rate can be measured. It should be as shown in Section 3.1 Technical Data.

5. For IE, it is necessary to complete a “Declaration of Conformity” to indicate compliance with I.S. 813. An example of this is given in I.S. 813 “Domestic Gas Installations”. This is in addition to the Benchmark Commissioning Checklist.

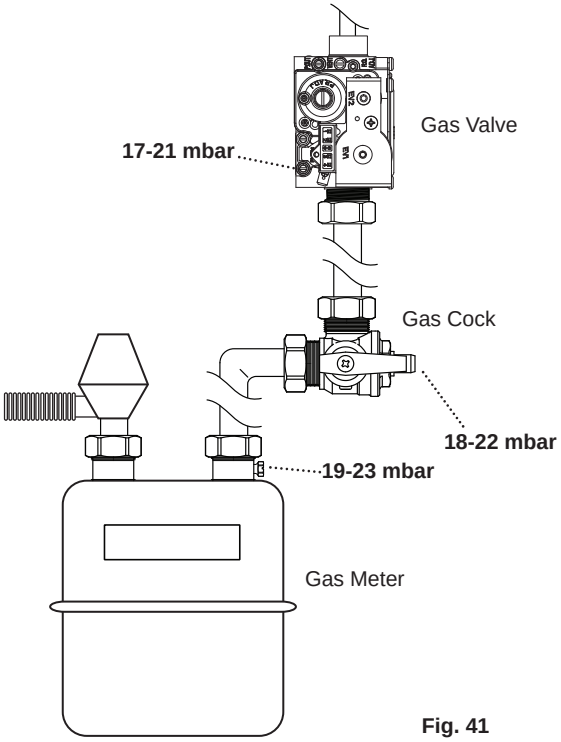

Fig. 41

Working Gas Pressures
If the pressure drops are greater than shown above a problem with the pipework or connections is indicated. Permissible pressure drop across system pipework ≤ 1 mbar.

7.6 Final Instructions

1. Carefully read and complete all sections of the Benchmark Commissioning Checklist at the rear of this publication that are relevant to the boiler and installation. These details will be required in the event of any warranty work.

2. The publication must be handed to the user for safe keeping and each subsequent regular service visit recorded.

3. Hand over the User's Operating, Installation and Servicing Instructions, giving advice on the necessity of regular servicing.

4. For IE, it is necessary to complete a "Declaration of Conformity" to indicate compliance with I.S. 813. An example of this is given in I.S. 813 "Domestic Gas Installations". This is in addition to the Benchmark Commissioning Checklist.

5. Instruct the user in the operation of the boiler controls. Hand over the User's Operating, Installation and Servicing Instructions, giving advice on the necessity of regular servicing.

6. Demonstrate to the user the action required if a gas leak occurs or is suspected. Show them how to turn off the gas supply at the meter control, and advise them not to operate electric light or power switched, and to ventilate the property.

7. Show the user the location of the system control isolation switch, and demonstrate its operation.

8. Advise the user that they may observe a plume of vapour from the flue terminal, and that it is part of the normal operation of the boiler.

9. Complete the label supplied with the inhibitor and stick to the inside of the boiler case. Detail of system treatment must be recorded in the Benchmark Commissioning Checklist.

8 Operation

8.1 General

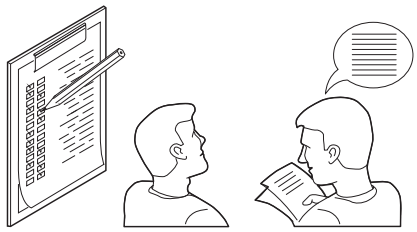

1. It is the responsibility of the installer to instruct the user in the day to day operation of the boiler and controls and to hand over the completed Benchmark Checklist at the back of this manual.

2. Set the central heating and hot water temperatures to the requirements of the user. Instruct the user in the operation of the boiler and system. The temperature on the boiler rotary knob must be set to a higher temperature than the cylinder thermostat to achieve the required hot water demand.

3. Instruct the user in the operation of the boiler and system controls. Demonstrate to the user the action required if a gas leak occurs or is suspected. Show them how to turn off the gas supply at the meter control, and advise them not to operate electric light or power switched, and to ventilate the property.

4. Show the user the location of the system control isolation switch, and demonstrate its operation. Advise the user that they may observe a plume of vapour from the flue terminal, and that it is part of the normal operation of the boiler.

5. When installed on a sealed system the method of repressurising the primary system should be demonstrated.

8.2 Start-up

1. Switch on the boiler at the fused spur unit and ensure that the time control is in the on position and any other controls (i.e. room thermostat) are calling for heat. The boiler will begin it start sequence.

8.3 Shutdown

1. If the CH system is shut down for remedial work requiring either the electrical power to be switched off or the gas supply to be turned off then any frost protection present will be inactive.

2. Switching off the boiler's power supply or turning off the gas supply will disable any frost protection that has been incorporated into the control system.

8.4 Use of the Control Panel

See Section 4.4 Control Panel Description

8.5 Frost Protection

1. To prevent radiators and pipework from freezing in areas where there is a risk of frost (e.g. a garage or storage room), a frost thermostat should be connected to the control system.

The following arrangement is recommended:-
Utilise a room frost thermostat in conjunction with a pipe thermostat. The pipe thermostat should be located on the primary return close to the boiler.

9 Settings

9.1 Parameters

The operating parameters for this boiler are factory set.

10 Maintenance

10.1 General

WARNING

When changing components ensure that both the gas and electrical supplies to the boiler are isolated before any work is started.
Electrical isolation can be checked at the electrical test point.
When a component has been changed recommission the boiler as described in Section 7.
The Case Front Panel MUST seal effectively against the boiler side panels.

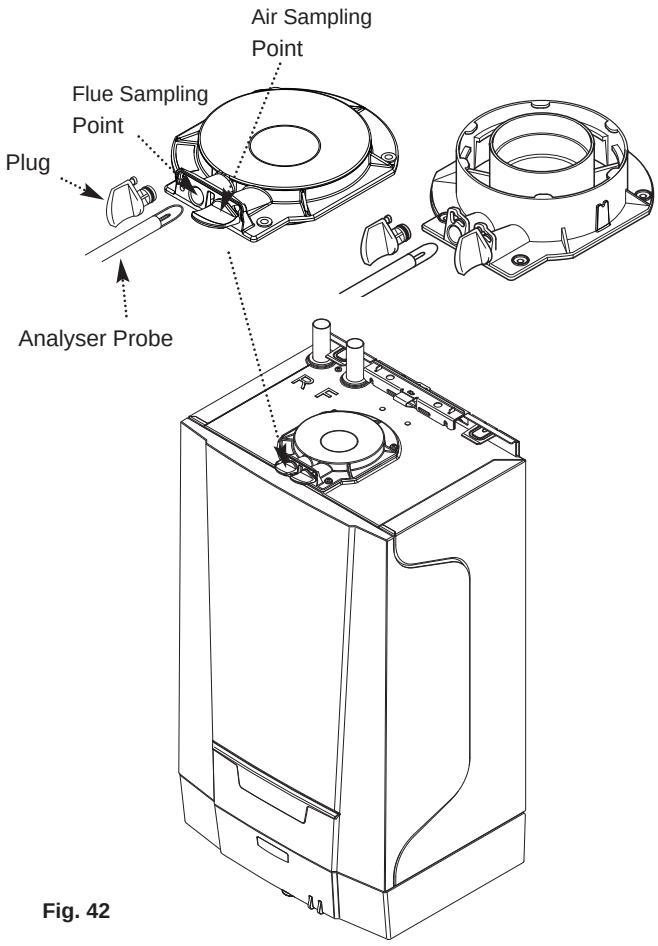

Fig. 42

After refitting the sampling point plug ensure there is no leakage of products !

1. For reasons of safety and economy, it is recommended that the boiler is serviced annually. Servicing must be performed by a competent person in accordance with B.S. 7967-4.

2. After servicing, complete the relevant Service Interval Record section of the Benchmark Commissioning Checklist at the rear of this publication.

During routine servicing, and after any maintenance or change of part of the combustion circuit, the following must be checked:-

- The integrity of the complete flue system and the flue seals by checking air inlet sample to eliminate the possibility of recirculation. **O_2 ≥ 20.6% & CO_2 < 0.2%**
- The integrity of the boiler combustion circuit and relevant seals.
- The operational gas inlet pressure and the gas rate as described in Section 7.5.1.
- The combustion performance as described in ‘Check the Combustion Performance’ below.

3. **Competence to carry out Checking Combustion Performance** B.S. 6798 ‘Specification for Installation & Maintenance of Gas Fired Boilers not exceeding 70kWh’ advises that:-

- The person carrying out a combustion measurement should have been assessed as competent in the use of a flue gas analyser and the interpretation of the results.

- The flue gas analyser used should be one meeting the requirements of BS7927 or BS-EN50379-3 and be calibrated in accordance with the analyser manufacturers’ requirements.

- Competence can be demonstrated by satisfactory completion of the CPA1 ACS assessment, which covers the use of electronic portable combustion gas analysers in accordance with BS 7967, Parts 1 to 4.

4. **Check the Combustion Performance (CO/CO_2 ratio)**

Set the boiler to operate at maximum rate as described in Section 7.4.

5. Remove the plug from the flue sampling point (Fig. 42), insert the analyser probe and obtain the CO/CO_2 ratio. **This must be less than 0.004.** If the combustion reading (CO/CO_2 ratio) is greater than this, and the integrity of the complete flue system and combustion circuit seals has been verified, and the inlet gas pressure and gas rate are satisfactory either:-

- Perform the ‘Standard Inspection and Maintenance’ (Section 10.2) & re-check.
- Perform ‘Setting the Gas Valve’ (Section 10.3.12) & re-check.

10.2 Standard Inspection and Maintenance Operation

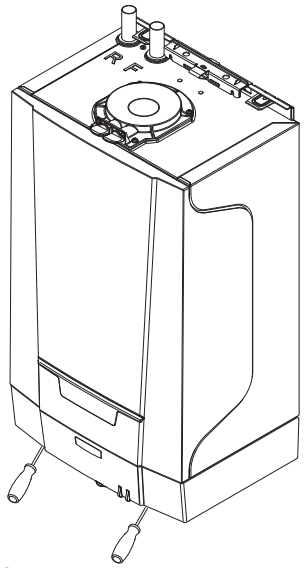

Fig. 43

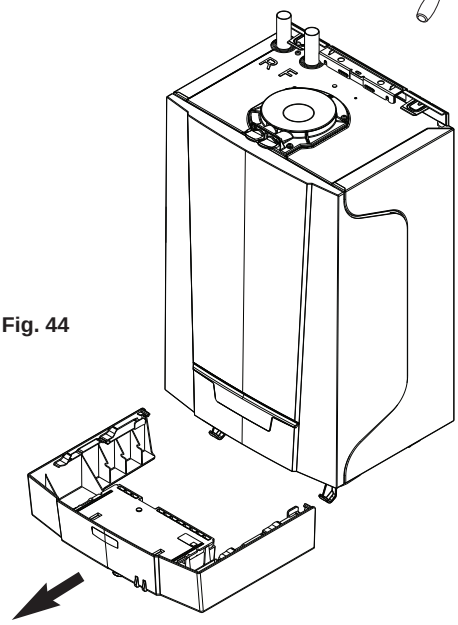

Fig. 44

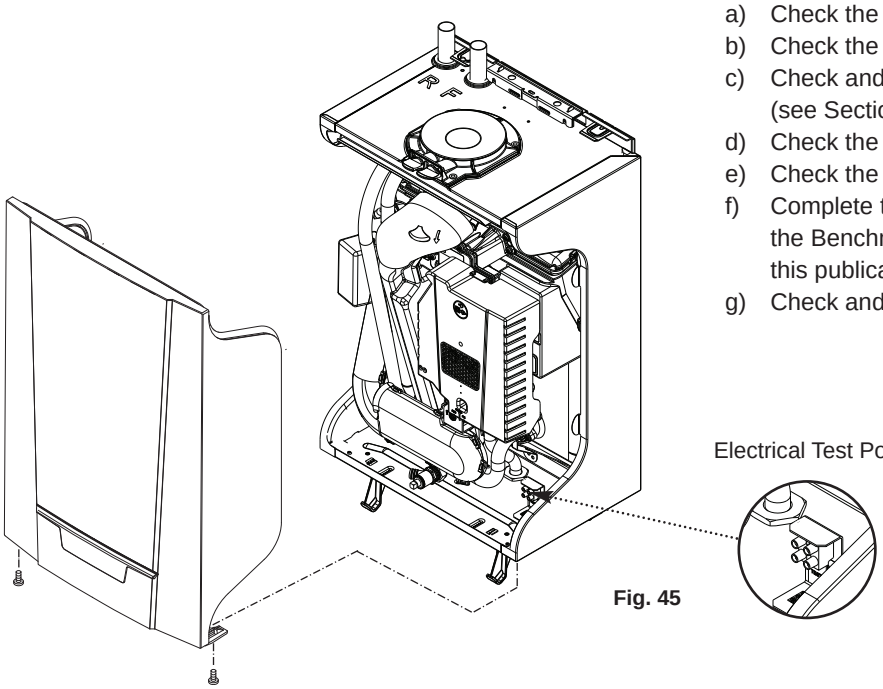

Fig. 45

WARNING

Ensure that the boiler is cool.

Ensure that both the gas and electrical supplies to the boiler are isolated.
Electrical isolation can be checked at the electrical test point.

CAUTION

Always examine any seals or gaskets, replacing where necessary. Where a seal or gasket is supplied with a spare part it should be used, irrespective of the condition of the original.

Use only original spare parts that are intended for use with this type of boiler.

When performing any inspection or maintenance personal protective equipment must be used where appropriate.

1. Unscrew the two screws located on the lower front panel (Fig. 43).

2. Slide the lower front panel forward and hinge down or remove (Fig. 44).

3. Unscrew the two securing screws on the front panel. Remove the front panel (Fig. 45).

4. Visually check for debris/damage and clean or replace if necessary the following:

a) Check the water pressure (sealed systems)
b) Check the flue pipes and air supply pipes for leaks
c) Check and clean (if necessary) the condensate trap (see Section 5.4.4)
d) Check the ignition electrode (replace if necessary)
e) Check the combustion
f) Complete the relevant Service Interval Record section of the Benchmark Commissioning Checklist at the rear of this publication and then hand it back to the user.
g) Check and clean (if necessary) the air inlet deflector

10.2 Standard Inspection and Maintenance Operation (cont.)

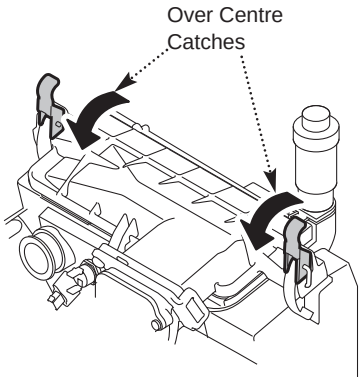

Fig. 46a

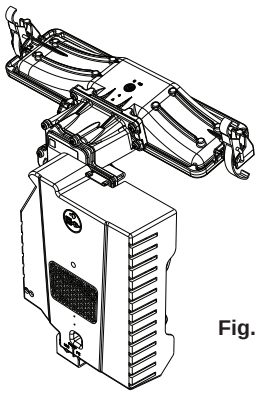

Fig. 46b

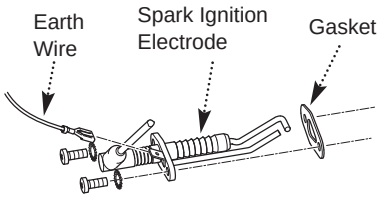

Fig. 46c

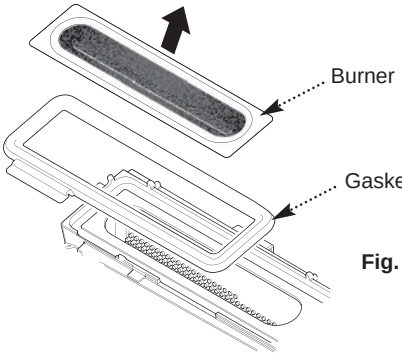

Fig. 46d

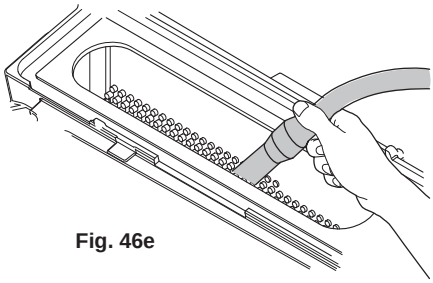

Fig. 46e

An ESD wrist strap should be used when working on these components.

A T25 screwdriver will be required.

5. Remove the air duct by pulling the bottom of the duct forward to disengage it from the gas valve and then sliding the top of the duct left away from the fan (see 10.3.4).

6. Disengage the clip at the top of the flue duct, pull the duct forwards and then manoeuvre it out of the heat exchanger sump connection.

7. Disconnect the cable from the bottom of the PCB, disengage the fan protective cover securing tab and lower the cover.

8. Taking care not to touch the PCB components, disconnect the electrode lead, earth lead, mains power cable and the main sensor harness from the board. Re-engage the fan protective cover.

9. Disconnect the plug from the gas valve and undo the nut on the gas inlet pipe at the base of the valve.

10. Remove the gas assembly (Fig. 46b) from the boiler by releasing the over-centre catches (Fig. 46a) that secure it to the heat exchanger.

11. Remove the ignition electrode (Fig 46c) and check the condition. Replace if necessary.

12. Remove the gasket and burner from the top of the heat exchanger (Fig. 46d). Use a suitable vacuum cleaner to clean the top part of the heat exchanger (Fig. 46e).

13. The burner does not require any maintenance but must be checked for cracks or deterioration, and replaced if necessary.

CAUTION

Ensure that all seals and gaskets are in position.

Ensure that all connectors are refitted to the PCB.

14. Reassemble in reverse order and recommission the boiler.

10.3 Specific Maintenance Operation

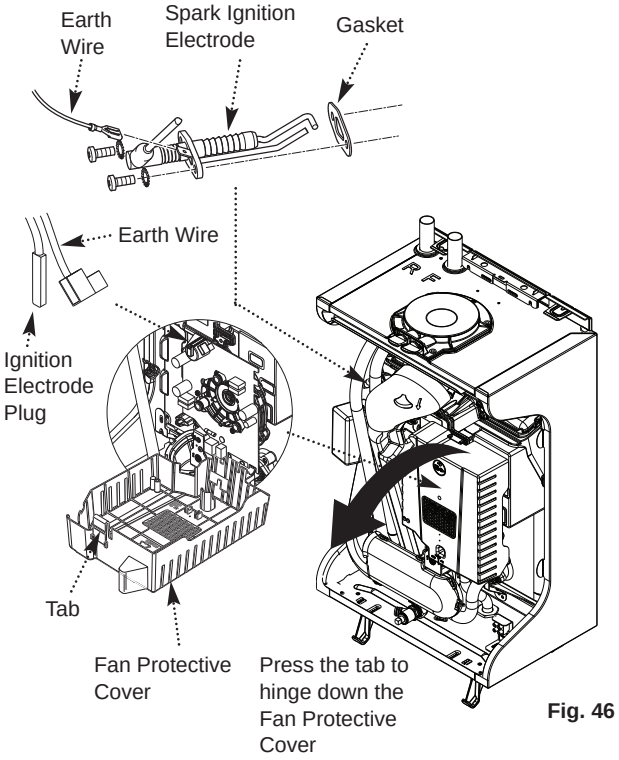

Fig. 46

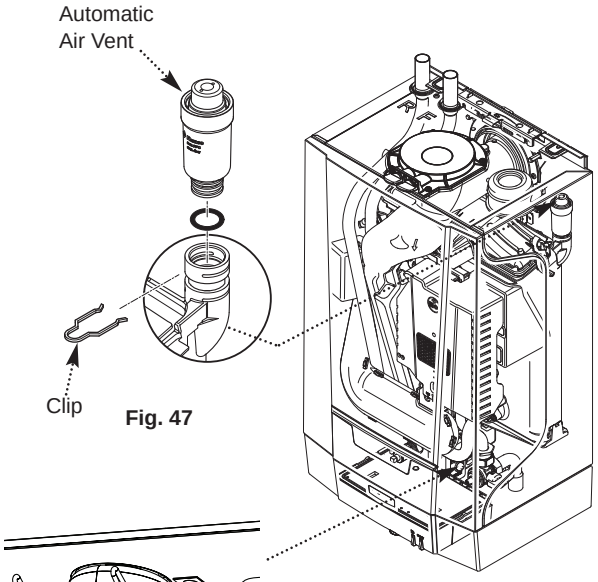

Fig. 47

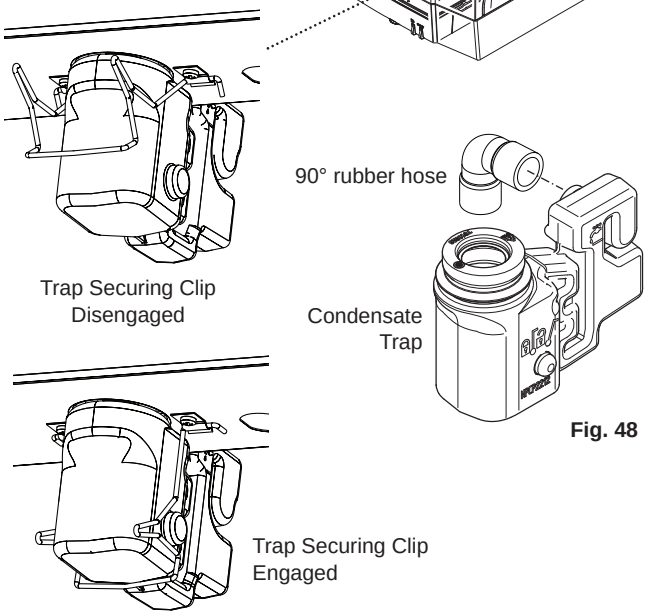

Fig. 48

WARNING

When changing components ensure that both the gas and electrical supplies to the boiler are isolated before any work is started.
Electrical isolation can be checked at the electrical test point.
When a component has been changed recommission the boiler as described in Section 7.
Always examine any seals or gaskets, replacing where necessary. Where a seal or gasket is supplied with a spare part it should be used, irrespective of the condition of the original.
The Case Front Panel MUST seal effectively against the air box side panels.

1. See section 10.2 for removal of lower front panel and front panel.

10.3.1 Spark Ignition Electrode (Fig. 46)

1. Disengage the fan protective cover securing tab and lower the cover.

2. Disconnect the ignition electrode plug from the PCB and the earth wire from the electrode.

3. Undo the two securing screws securing and remove the electrode and gasket.

4. Fit the new electrode and if necessary replace the gasket. Connect the electrode lead to the PCB and earth wire to the new electrode.

10.3.2 Automatic Air Vent (Fig. 47)

1. Remove the clip securing the automatic air vent.

2. Manoeuvre the air vent out of the adaptor in the heat exchanger.

3. Fit the new air vent and if necessary replace the ‘O’ ring . Refit the securing clip.

10.3.3 Condensate Trap (Fig. 48)

1. Disengage the condensate trap securing clip by pulling forwards and hinging upwards.

2. Disconnect the 90° rubber hose from the trap and dismantle the condensate drain pipework as necessary. Carefully pull out the trap and discard.

3. The new condensate trap must be primed by filling with tap water to a depth of approximately 75mm.

4. Carefully locate the new condensate trap in the boiler ensuring all seals are located properly and re-engage the securing clip. Reconnect the 90° rubber hose and pipework.

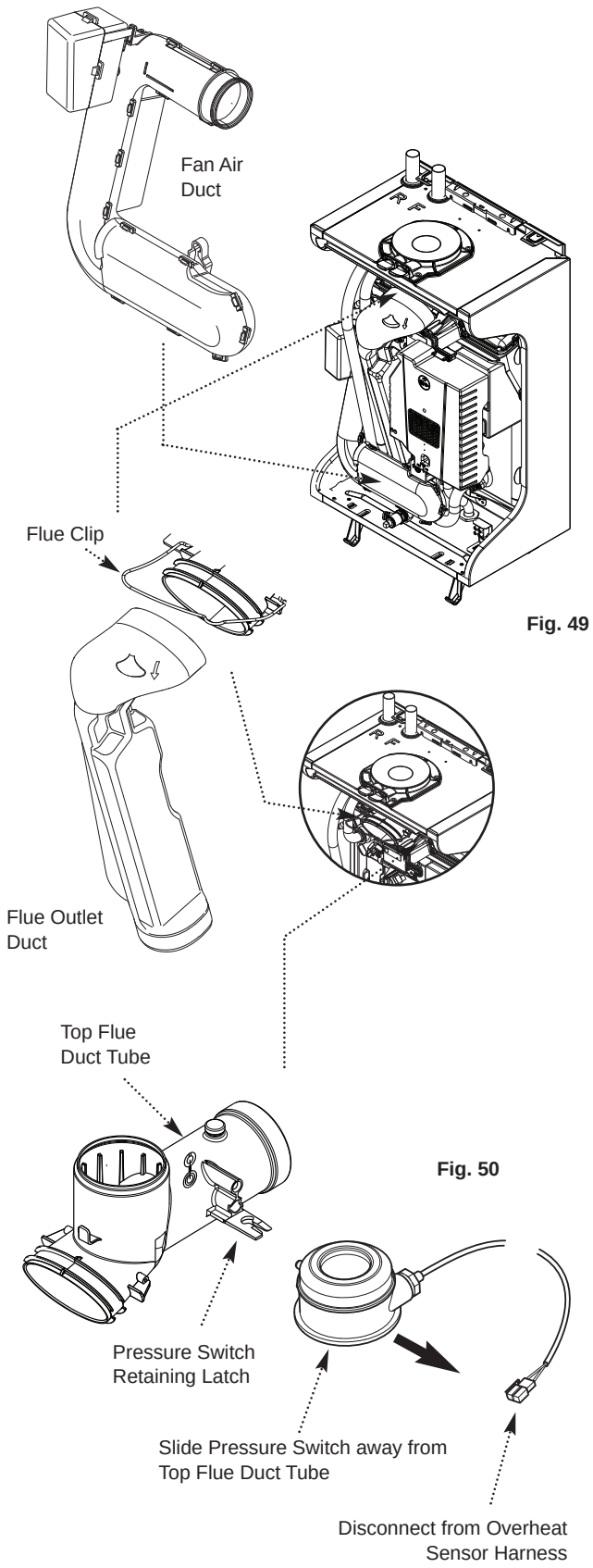

Fig. 49

Fig. 50

Removal of the fan air duct and flue outlet duct is necessary to enable the changing of the pressure switch, flow temperature sensor, return temperature sensor, overheat sensor and gas valve.

10.3.4 Removal of Ducts (Fig. 49)

1. Remove the air duct by pulling the bottom of the duct forward to disengage it from the gas valve and then sliding the top of the duct left away from the fan.

2. Disengage the clip at the top of the flue duct, pull the duct forwards and then manoeuvre it out of the heat exchanger sump connection.

10.3.5 Pressure Switch (24 & 30 only) (Fig. 50)

1. Disconnect the pressure switch wiring from the overheat sensor wiring harness.

2. Depress the retaining latch to release the pressure switch pull to the right and remove it from the top flue duct tube.

3. Fit the new pressure switch, ensuring the ‘O’ ring is in place on the lower spigot and reconnect to the wiring harness from the overheat sensor.

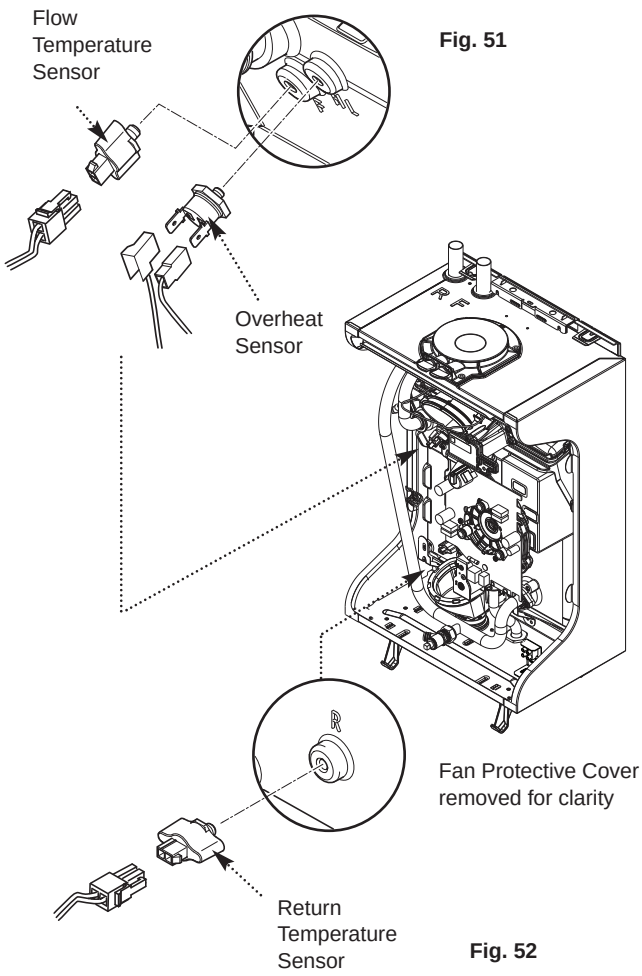

Fig. 51

Fig. 52

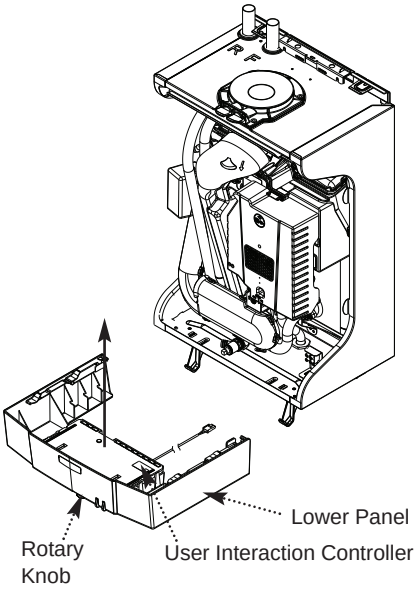

Fig. 52a

10.3.6 **Flow Temperature Sensor** (Fig. 51)

The sensor is fitted in a ‘dry’ pocket.

1. Disconnect the wiring from the flow temperature sensor.

2. Unscrew the sensor from the top of the heat exchanger.

3. Fit the new sensor and reconnect the wiring.

10.3.7 **Overheat Sensor** (Fig. 51)

The sensor is fitted in a ‘dry’ pocket. For ease of access remove the Flow Temperature Sensor (10.3.6)

1. Disconnect the wiring from the overheat sensor.

2. Unscrew the sensor from the top of the heat exchanger.

3. Fit the new sensor and reconnect the wiring.

10.3.8 **Return Temperature Sensor** (Fig. 52)

The sensor is fitted in a ‘dry’ pocket.

1. Disconnect the wiring from the return temperature sensor.

2. Unscrew the sensor from the top of the heat exchanger.

3. Fit the new sensor and reconnect the wiring.

10.3.9 **User Interaction Controller** (Fig. 52a)

1. Disconnect the User Interaction Controller cable from the PCB and undo the cable gland locknut.

2. Note the setting and carefully prise off the rotary temperature selection knob.

3. Ease apart the retaining clips on the lower panel and withdraw the User Interaction Controller and cable.

4. Reassemble in reverse order, setting the rotary knob as previously noted.

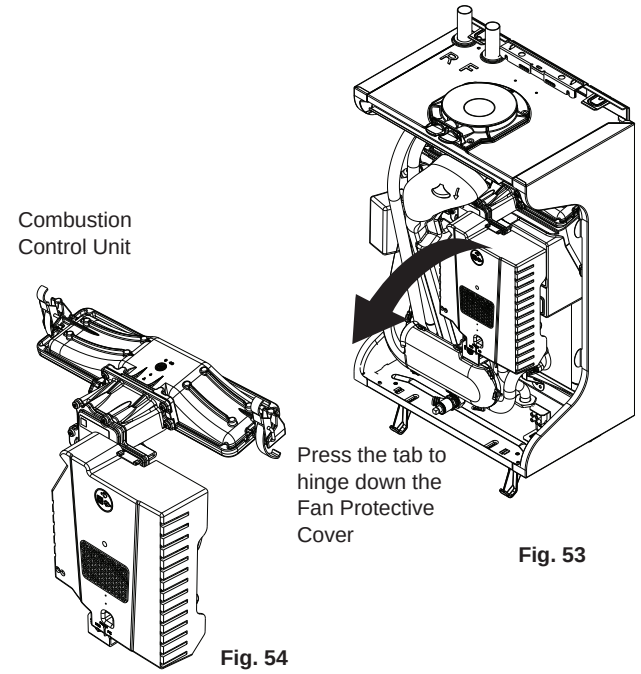

Fig. 53

Fig. 54

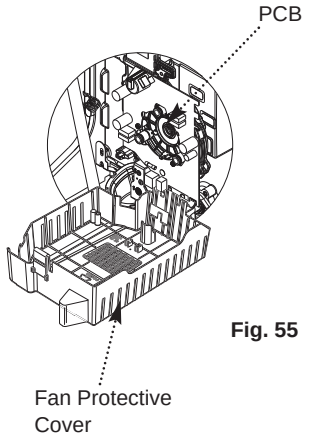

Fig. 55

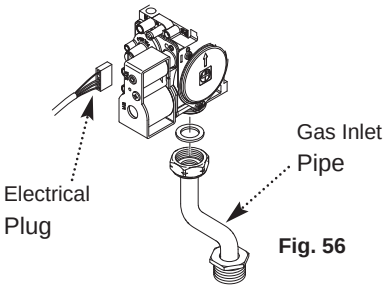

Fig. 56

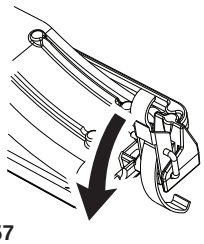

Fig. 57

10.3.11 Combustion Control Unit (Figs. 53 to 57)

After replacing the Combustion Control Unit the CO_2 must be checked and adjusted as detailed in Section 10.3.12 Setting the Gas Valve. Only change the Combustion Control Unit if a suitable calibrated combustion analyser is available, operated by a competent person - see section 10.1.3.

An ESD wrist strap should be used when replacing these components.

1. Ensure that the gas supply to the boiler is isolated.

Remove the ducts as described in Section 10.3.4

2. Disconnect the cable from the bottom of the PCB, disengage the fan protective cover securing tab and lower the cover.

3. Taking care not to touch the PCB components, disconnect the electrode lead, earth lead, mains power cable and the main sensor harness from the board. Re-engage the fan protective cover (Fig. 55).

4. Disconnect the plug from the gas valve and undo the nut on the gas inlet pipe at the base of the valve (Fig. 56).

5. Remove the combustion control unit from the boiler by releasing the over-centre catches that secure it to the heat exchanger (Fig. 57).

6. Reassemble all components in reverse order. When a seal kit is provided replace the existing seals with the new ones. Inspect all other seals before reassembly and replace if necessary. Check all the joints are tight and wires are securely connected.

Check gas tightness & CO_2 !

If the boiler will not light, prior to final setting, use a suitable hexagon key to wind out the Throttle Adjustment Screw until it is flush with the valve body, then turn the screw 4 full turns clockwise. If the boiler will not light, or the correct CO_2 cannot be achieved contact the 'Baxi Customer Support' technical helpline.

See Section 10.3.12 for CO_2 check.

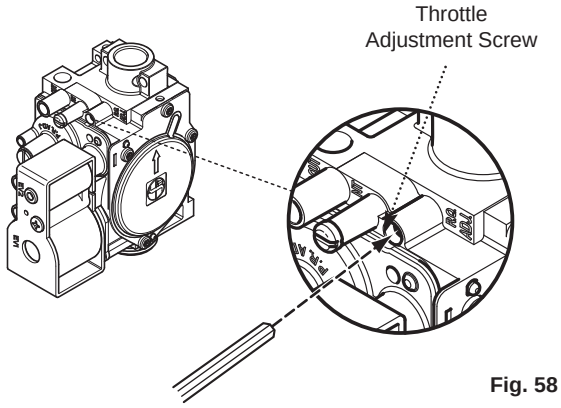

Fig. 58

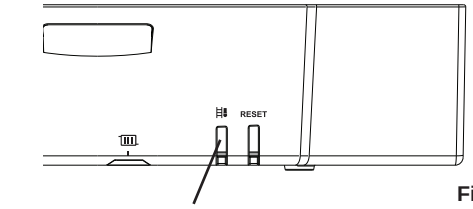

Fig. 59

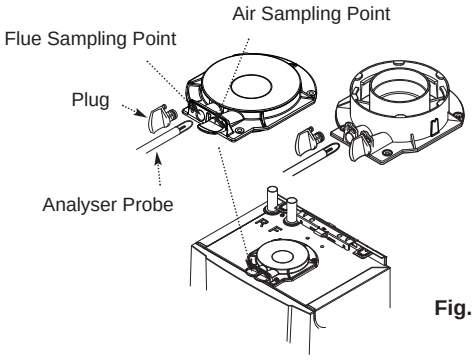

Fig. 60

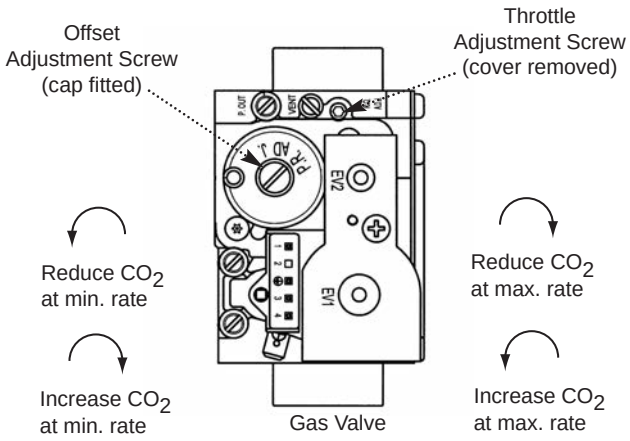

Fig. 61

10.3.16 Setting the Gas Valve (CO_2 Check)

The CO_2 must be only be checked and adjusted to set the valve if a suitable calibrated combustion analyser is available, operated by a competent person - see Section 10.1.3.

If a new gas valve has been fitted it is recommended that to assist the boiler to light prior to final setting, use a suitable hexagon key to wind out the Throttle Adjustment Screw (Fig. 58) until it is flush with the valve body, then turn the screw 4 full turns clockwise. If the boiler will not light, or the correct CO_2 cannot be achieved contact the Baxi Customer Support.

1. The maximum rate CO_2 setting can only be reached via the minimum rate. Press the Chimney Sweep (Fig. 59) button for approximately 3 seconds. The status signal for the Chimney Sweep button is orange and flashes green briefly to show that the minimum rate is selected.

2. Press the Chimney Sweep button again once. The orange status light for the Chimney Sweep button goes off briefly once and maximum rate is selected.

When the boiler first lights wait a short time before inserting the analyser probe to avoid saturation.

3. Remove the plug from the flue sampling point (Fig. 60) and insert the probe of the flue gas analyser.

4. Check the CO_2 is 9.3% ±0.1%. If the CO_2 is incorrect alter the Throttle Adjustment Screw (Fig. 61). Turn the screw anticlockwise to increase the CO_2 or clockwise to decrease (2.5mm hexagon key).

Do not turn either adjustment screw more than 1/8 of a turn at a time. Allow the analyser reading to settle before any further adjustment.

5. Press the Chimney Sweep button twice to select the minimum rate. The orange status light for the Chimney Sweep button flashes green briefly and minimum rate is selected.

6. Check the CO_2 is 8.9% ±0.1%. If the CO_2 is incorrect alter the Offset Adjustment Screw (Fig. 61). Turn the screw clockwise to increase the CO_2 or anticlockwise to decrease (4mm hexagon key).

Re-check both the maximum and minimum values if any adjustment has been made. THERE MUST ALWAYS BE A DIFFERENCE OF 0.4% BETWEEN MAXIMUM & MINIMUM CO_2 READINGS!

7. Check the Combustion Performance (CO/CO_2 ratio). This must be less than 0.004.

8. Briefly press the RESET button to return the boiler to normal operating status and remove the analyser probe.

Refit the sampling point plug & ensure there is no leakage of products !

11 Troubleshooting

11.1 Error Codes

Operation status and error codes are displayed on the “chimney sweep” button (3) on the control panel. In normal operation this button is illuminated and goes off for a time once periodically.

When normal operation is interrupted for some reason this button will turn off and flash on a number of times periodically. The colour and number of flashes displayed is dependent on the boiler status or fault condition.

The orange LEDs will flash at EVERY heating demand. The number of flashes will correspond with the output of the boiler as shown in the table. e.g. 4 orange flashes = 21kW. This is normal and does not indicate a fault condition.

“Error” or auto reset conditions (Green flashes on “chimney sweep”)

The following table describes the conditions that may result in a blocking signal being displayed.

The boiler will try to re-start several times, and normal operation will resume once the blocking condition has been eliminated.

Should the conditions persist the boiler may go into lock-out (see following section)

Status signal	Description		Remedial actions by service engineer
1 flash green	Temperature protection	• Maximum flow temperature exceeded, • Flow temperature rise rate too high, • Excessive difference between flow and return temperature	• Check system circulation & pump operation • Check demands for boiler operation (switched live operation) • Check temperature setting • Check temperature sensors in boiler
2 flashes green	Shutdown input	• BL terminals on User Interaction Controller are open circuit	• If condensate pump is wired to these terminals check operation of condensate pump • Check wiring to BL terminals (link present or connections to external device correct)
3 flashes green	Flame loss	• No flame detected during operation	• Check gas supply is turned on and gas is available if on a pre-payment meter • Check flue condition
4 flashes green	Communication fault	• Bad connection or wiring fault • Internal communication fault	• Check wiring/connections between boiler and User Interaction Controller and within the box • If necessary replace combustion control unit
5 flashes green	Parameter fault	• Parameter error or faulty PU • Configuration error or PCB fault	• Replace combustion control unit
6 flashes green	Miscellaneous	• Internal fault in combustion control unit	• Replace combustion control unit

Lock-out conditions (Red flashes on “chimney sweep”)

The following table describes the conditions that may result in a lock-out condition and red flashing signal being displayed.

To reset a lock-out condition press and hold the reset button until the fault indication flashes rapidly and goes out.

NOTE: a lock-out condition can be re-set up to 5 times within one hour using the reset button. Any repeating fault should be fully investigated and appropriate remedial actions taken by a Gas Safe registered service engineer.

Status signal	Description	Possible causes	Remedial actions by service engineer
1 flash red	Sensor error	• Bad connection to flow or return temperature sensor • Fault with flow or return temperature sensor(s) • Low or no flow through boiler • Reverse flow through boiler	• Check connections to temperature sensors/PCB and condition of wiring loom • Check resistance of temperature sensors • Check pump operation and system circulation
2 flashes red	High temperature protection	• Over-temperature thermostat on heat exchanger activated • No water flow through heat exchanger • Over-temperature thermostat fault or bad connection (open circuit). • PCB over-temperature condition • Flue fault resulting in recirculation or activation of air pressure switch (if fitted)	• Check connections to and operation of O/T thermostat and air pressure switch (if fitted) and PCB and condition of wiring loom • Check system pressure or that system is not air-locked • Check pump operation and system circulation • Check flue condition
3 flashes red	Ignition fault	• No ignition • No flame detected following ignition • False flame signal detected • Repeated loss of flame detected	• Check earthing of the appliance • Check ignition electrode condition and clean/replace if necessary • Check gas valve operation • Check flue condition • Check correct combustion/gas valve settings • Check condensate drain for blockage
4 flashes red	Fan fault	• Fan calibration error • Fan failure	• If fan operates, check flue installation and condition. • Replace combustion control unit
5 flashes red	Parameter fault	• Bad connection to PU • Parameter error or faulty PU	• PCB and condition of wiring loom • Replace combustion control unit
6 flashes red	Miscellaneous	• Bad connection or wiring fault internal or external to the boiler • Parameter error • Communication error	• Check all wiring connections are correctly made • Using a service tool or Recom software check all parameter settings • Replace combustion control unit

12 Decommissioning

12.1 Decommissioning Procedure

1. Isolate the gas & electric supplies and disconnect them.

2. Drain the primary circuit and disconnect the filling device.

3. Dismantle the chimney system and remove the boiler from the wall mounting frame.

13 Spare Parts

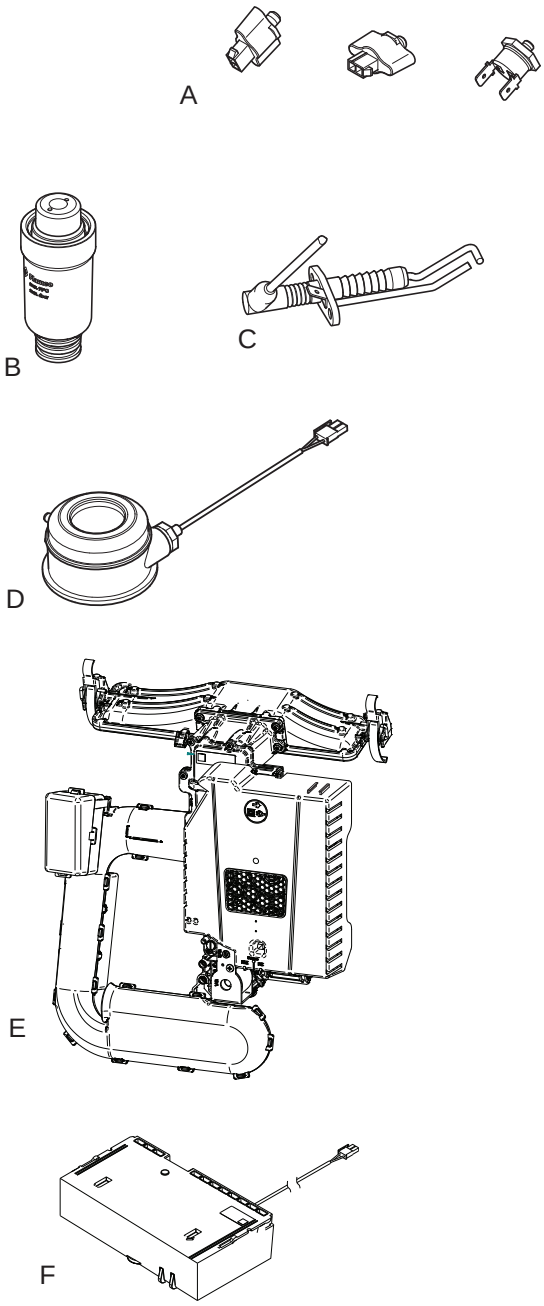

13.1 General

1. If, following the annual inspection or maintenance any part of the boiler is found to need replacing, use Baxi Genuine Parts only.

13.2 Short Parts List

Key No.	Description	Manufacturer's Part No.
A	Sensor Kit	7216301
B	Automatic Air Vent	7216300
C	Ignition/Sensing Electrode	7216299
D	Pressure Switch (24 & 30 only)	7212522
E	Combustion Control Unit 12	7664628
	Combustion Control Unit 15	7664974
	Combustion Control Unit 18	7664991
	Combustion Control Unit 24	7665026
	Combustion Control Unit 30	7665036
F	User Interaction Controller	7600498

GAS BOILER SYSTEM COMMISSIONING CHECKLIST

This Commissioning Checklist is to be completed in full by the competent person who commissioned the boiler as a means of demonstrating compliance with the appropriate Building Regulations and then handed to the customer to keep for future reference.

Failure to install and commission according to the manufacturer's instructions and complete this Benchmark Commissioning Checklist will invalidate the warranty. This does not affect the customer's statutory rights.

Customer name:	Telephone number:
Address:	
Boiler make and model:	
Boiler serial number:	
Commissioned by (PRINT NAME):	Gas Safe register number:
Company name:	Telephone number:
Company address:	
	Commissioning date:
To be completed by the customer on receipt of a Building Regulations Compliance Certificate*	
Building Regulations Notification Number (if applicable):	

CONTROLS (tick the appropriate boxes)				
Time and temperature control to heating	Room thermostat and programmer/timer		Programmable room thermostat	
	Load/weather compensation		Optimum start control	
Time and temperature control to hot water	Cylinder thermostat and programmer/timer		Combination Boiler	
Heating zone valves	Fitted		Not required	
Hot water zone valves	Fitted		Not required	
Thermostatic radiator valves	Fitted		Not required	
Automatic bypass to system	Fitted		Not required	
Boiler interlock			Provided	

ALL SYSTEMS				
The system has been flushed and cleaned in accordance with BS7593 and boiler manufacturer's instructions			Yes	
What system cleaner was used?				
What inhibitor was used?			Quantity	litres
Has a primary water system filter been installed?	Yes		No	

CENTRAL HEATING MODE measure and record:			
Gas rate	m³/hr	**OR**	ft³/hr
Burner operating pressure (if applicable)	mbar	**OR** Gas inlet pressure	mbar
Central heating flow temperature			°C
Central heating return temperature			°C

COMBINATION BOILERS ONLY				
Is the installation in a hard water area (above 200ppm)?	Yes		No	
If yes, and if required by the manufacturer, has a water scale reducer been fitted?	Yes		No	
What type of scale reducer has been fitted?				
DOMESTIC HOT WATER MODE Measure and Record:				
Gas rate	m³/hr	**OR**	ft³/hr	
Burner operating pressure (at maximum rate)	mbar	**OR** Gas inlet pressure at maximum rate	mbar	
Cold water inlet temperature			°C	
Hot water has been checked at all outlets	Yes		Temperature	°C
Water flow rate			l/min	

CONDENSING BOILERS ONLY		
The condensate drain has been installed in accordance with the manufacturer's instructions and/or BS5546/BS6798	Yes	

ALL INSTALLATIONS						
Record the following:	At max. rate:	CO	ppm	**AND**	CO/CO_2	Ratio
	At min. rate: (where possible)	CO	ppm	**AND**	CO/CO_2	Ratio
The heating and hot water system complies with the appropriate Building Regulations					Yes	
The boiler and associated products have been installed and commissioned in accordance with the manufacturer's instructions					Yes	
The operation of the boiler and system controls have been demonstrated to and understood by the customer					Yes	
The manufacturer's literature, including Benchmark Checklist and Service Record, has been explained and left with the customer					Yes	

Commissioning Engineer's Signature
Customer's Signature
(To confirm satisfactory demonstration and receipt of manufacturer's literature)

*All installations in England and Wales must be notified to Local Authority Building Control (LABC) either directly or through a Competent Persons Scheme. A Building Regulations Compliance Certificate will then be issued to the customer.

benchmark COLLECTIVE MARK
THE MARK OF QUALITY FOR THE INSTALLATION, COMMISSIONING AND SERVICING OF DOMESTIC HEATING AND HOT WATER SYSTEMS

© Heating and Hotwater Industry Council (HHIC)

SERVICE RECORD

It is recommended that your heating system is serviced regularly and that the appropriate Service Interval Record is completed.

Service Provider

Before completing the appropriate Service Record below, please ensure you have carried out the service as described in the manufacturer's instructions. Always use the manufacturer's specified spare part when replacing controls.

SERVICE 01					Date:
Engineer name:					
Company name:					
Telephone No:					
Gas safe register No:					
Record:	At max. rate:	CO	ppm	**AND**	CO_2 %
	At min. rate: (Where Possible)	CO	ppm	**AND**	CO_2 %
Comments:					
Signature					

SERVICE 02					Date:
Engineer name:					
Company name:					
Telephone No:					
Gas safe register No:					
Record:	At max. rate:	CO	ppm	**AND**	CO_2 %
	At min. rate: (Where Possible)	CO	ppm	**AND**	CO_2 %
Comments:					
Signature					

SERVICE 03					Date:
Engineer name:					
Company name:					
Telephone No:					
Gas safe register No:					
Record:	At max. rate:	CO	ppm	**AND**	CO_2 %
	At min. rate: (Where Possible)	CO	ppm	**AND**	CO_2 %
Comments:					
Signature					

SERVICE 04					Date:
Engineer name:					
Company name:					
Telephone No:					
Gas safe register No:					
Record:	At max. rate:	CO	ppm	**AND**	CO_2 %
	At min. rate: (Where Possible)	CO	ppm	**AND**	CO_2 %
Comments:					
Signature					

SERVICE 05					Date:
Engineer name:					
Company name:					
Telephone No:					
Gas safe register No:					
Record:	At max. rate:	CO	ppm	**AND**	CO_2 %
	At min. rate: (Where Possible)	CO	ppm	**AND**	CO_2 %
Comments:					
Signature					

SERVICE 06					Date:
Engineer name:					
Company name:					
Telephone No:					
Gas safe register No:					
Record:	At max. rate:	CO	ppm	**AND**	CO_2 %
	At min. rate: (Where Possible)	CO	ppm	**AND**	CO_2 %
Comments:					
Signature					

SERVICE 07					Date:
Engineer name:					
Company name:					
Telephone No:					
Gas safe register No:					
Record:	At max. rate:	CO	ppm	**AND**	CO_2 %
	At min. rate: (Where Possible)	CO	ppm	**AND**	CO_2 %
Comments:					
Signature					

SERVICE 08					Date:
Engineer name:					
Company name:					
Telephone No:					
Gas safe register No:					
Record:	At max. rate:	CO	ppm	**AND**	CO_2 %
	At min. rate: (Where Possible)	CO	ppm	**AND**	CO_2 %
Comments:					
Signature					

SERVICE 09					Date:
Engineer name:					
Company name:					
Telephone No:					
Gas safe register No:					
Record:	At max. rate:	CO	ppm	**AND**	CO_2 %
	At min. rate: (Where Possible)	CO	ppm	**AND**	CO_2 %
Comments:					
Signature					

SERVICE 10					Date:
Engineer name:					
Company name:					
Telephone No:					
Gas safe register No:					
Record:	At max. rate:	CO	ppm	**AND**	CO_2 %
	At min. rate: (Where Possible)	CO	ppm	**AND**	CO_2 %
Comments:					
Signature					

*All installations in England and Wales must be notified to Local Authority Building Control (LABC) either directly or through a Competent Persons Scheme. A Building Regulations Compliance Certificate will then be issued to the customer.

benchmark COLLECTIVE MARK
THE MARK OF QUALITY FOR THE INSTALLATION, COMMISSIONING AND SERVICING OF DOMESTIC HEATING AND HOT WATER SYSTEMS

© Heating and Hotwater Industry Council (HHIC)

Notes

Notes

Baxi Customer Support

0344 871 1545

Opening hours

Monday - Friday, 8.00am-6.00pm

Weekends and Bank Holidays, 8.30am-2.00pm

Please note calls may be recorded for training and monitoring purposes

baxi.co.uk

Register now to activate your warranty:

www.baxi.co.uk/registration

For the warranty to be maintained, please make sure...

1. Benchmark checklist is completed
2. Warranty is registered within 30 days
3. The boiler has an annual service

For full terms and conditions, visit www.baxi.co.uk/terms. Failure to adhere to terms and conditions will void your manufacturer's warranty.

Baxi
Brooks House,
Coventry Road,
Warwick, CV34 4LL

benchmark
COLLECTIVE MARK
THE MARK OF QUALITY FOR THE INSTALLATION, COMMISSIONING AND SERVICING OF DOMESTIC HEATING AND HOT WATER SYSTEMS

Please ensure the boiler is installed in accordance with these installation instructions and that you adhere to the Building Regulations.

CE
0086

e&oe
All descriptions and illustrations provided in this document have been carefully prepared but we reserve the right to make changes and improvements in our products which may affect the accuracy of the information contained in this leaflet. All goods are sold subject to our standard Conditions of Sale which are available on request.

part of BAXI

7684199-01 (06/17)