Instructions for Use Installation and Servicing

To be left with the user

HIGH EFFINCENCY - LOW NOX

CONDENSING

COMBINATION BOILER

CSI 120 (T) Low Nox
CSI 150 (T) Low Nox

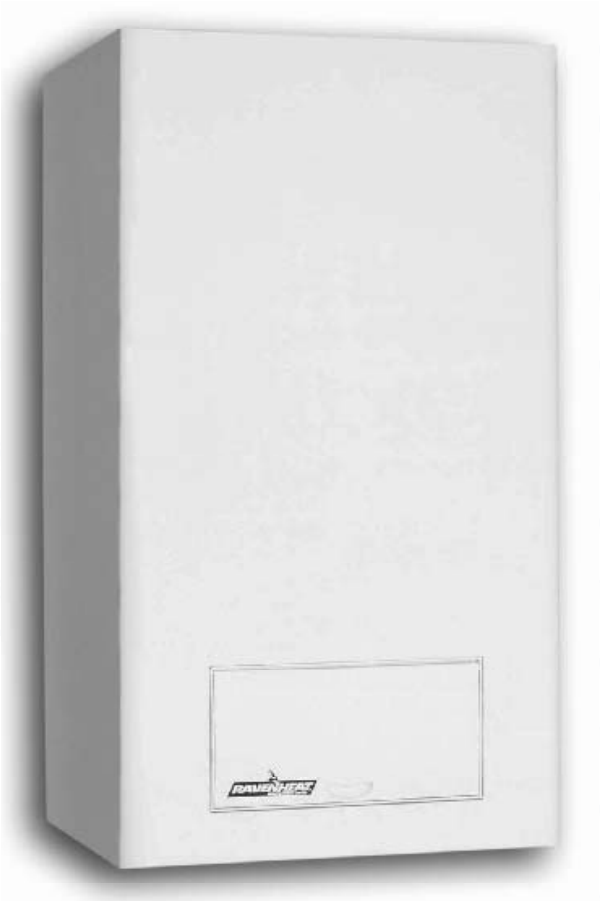

Natural Gas (G20) I_{2H} - II_{2H3+}
LPG (G30-G31) I_{3+} - II_{2H3+}

Listed by The United Kingdom Water Fitting Byelaws Scheme

CE 0087 ISO 9001

benchmark

The code of practice for the installation, commissioning & servicing of central heating systems

Technical and illustative data are not binding and can be modified without prior notice.
The descriptions and illustrations in the present booklet are for guideline purposes only.

RAVENHEAT MANUFACTURING LTD, CHARTISTS WAY, MORLEY, LEEDS, LS27 9ET
TEL. 0044(0)113 252 7007 - FAX: 0044 (0)113 238 0229
Website : www.ravenheat.co.uk - E-mail : sales@ravenheat.co.uk

spares & parts online
IBASIS.CO.UK

HIGH EFFICENCY CONDENSING SYSTEM INNOVATION AUTOMATIC MODULATING BOILER

FOR CENTRAL HEATING AND DOMESTIC HOT WATER

This new super high efficient turbo-modulating boiler is designed to meet domestic hot water and central heating requirements at super high efficiency, unheard of only a few years ago.

POSITION

The appliance is extremely versatile as it can be fitted in almost any room. The appliance is room sealed, there is no contact between combustion chamber and living accommodation. This guarantees maximum safety and efficiency. Indeed, our depression/combustion front cover has been designed to fit, achieving maximum air tight seal using screw down fasteners at 15 cm. This should not hinder service of the appliance, but does ensure maximum efficiency and safety - something which we at Ravenheat take great pride in.

Each boiler has been designed and manufactured in our modern plant to exacting ISO 9001 discipline, all boilers carry full CE marking of approval. Technical sales and commercial service are available throughout the UK. This product is guaranteed by Ravenheat Manufacturing, Chartists Way, Morley, LEEDS, LS27 9ET. Telephone No (0113) 252 7007.

BASIC COMPONENTS - (See figure 1)

Guarantee is a full 12 months from date of purchase providing the appliance has been fitted in accordance with these instructions and relevant codes of practice.

MAJOR COMPONENTS

- Gas valve.
- Variable head pump suitable for any type of central heating system.
- Burner with flame stabiliser designed to operate under all thermal conditions.
- Primary heat exchanger constructed from stainless steel.
- Unique **patented condensing heat exchanger** for high thermal flue transfer gases to water.
- Stainless steel plate heat exchanger for super high heat transfer to domestic hot water.
- Highly reliable diverter valve with ethylene propylene diaphragm permitting primary flow circulation in the boiler during domestic hot water supply.
- Built in frost protection.
- Printed circuit board designed to connect to room stat and/or timer/frost stat. Aesthetically pleasing panels and controls.
- On/Off ball valves for shutting off gas central heating and domestic hot water circuit Safety relief valve (for safety discharge).

Programmable 7 day module with digital display (optional model).

All front panel controls not often used have been hidden. This achieves simplicity of operation with easy to clean panels.

NOTE: Due to the high efficiency of this boiler a plume of water vapour will form at the flue terminal during operation.

COSHH - CONTROL OF SUBSTANCES HARMFUL TO HEALTH

IMPORTANT

This appliance contains materials that are indicated below.

It is the Users/Installers responsibility to ensure that the necessary personal protective clothing is-worn when handling, where applicable, the pertinent parts that contain any materials that could be interpreted as being injurious to health and safety.

WARNING When installing the appliance, care should be taken to avoid any possibility of injury when handling sheet metal parts.

GENERAL INFORMATION:

GLUES AND SEALANTS - exercise caution - if these are still in liquid form.

INSULATION PADS, CERAMIC FIBRE - may be harmful if inhaled, may be irritating to skin, eyes, nose and throat.

When handling keep dust generation to a minimum, avoid inhaling and contact with skin or eyes.

When disposing of the product keep dust generation to a minimum and ensure that parts are securely wrapped.

When servicing avoid inhalation by using a vacuum cleaner or in conjunction with other tools. After handling wash hands and other exposed parts.

RAVENHEAT use only high quality material for production of this product, in an effort to protect the environment components should be re-cycled.

TABLE OF CONTENTS

SECTIONS		PAGE
1	INTRODUCTION	6
2	DESCRIPTION AND SEQUENCE	6
3	TECHNICAL DATA	8
4	GENERAL REQUIREMENTS	10
5	INSTALLATION	15
6	COMMISSIONING	25
7	SERVICING INSTRUCTIONS	27
8	REPLACEMENT OF PARTS	29
9	FAULT FINDING	38
10	ELECTRICAL SYSTEM DIAGRAM	40
11	ALTERNATIVE FLUE SYSTEM	41
12	LIST OF SPARE PARTS	44

GENERAL LAYOUT

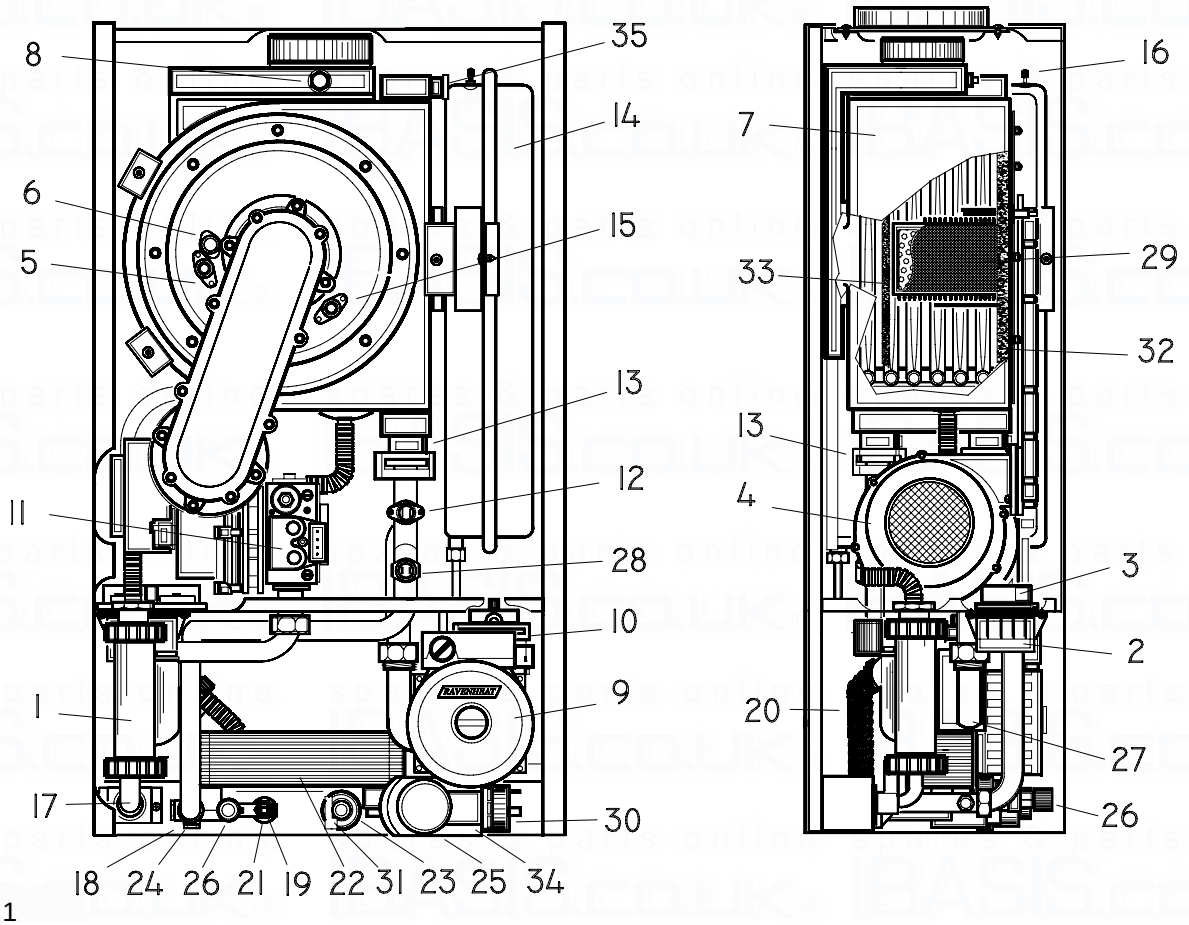

Fig. 1

KEY

1 - Condensing trap
2 - DC Fan Supply
3 - Ignition Module
4 - Fan
5 - Ignition electrode
6 - Sight glass
7 - Main heat exchanger
8 - Temperature flue sensor
9 - Circulation pump
10 - Auto air vent valve
11 - Gas Valve
12 - Overheat cut off thermostat
13 - Retaining clips
14 -Expansion vessel
15 - Sensing electrode
16 - Pressure test point
17 - Gas inlet
18 - C.H. outlet
19 - D.H.W. sensor
20 - Condensate drain
21 - D.H.W. outlet
22 - D.H.W. Heat exchanger
23 - D.H.W. inlet
24 - Drain point
25 - C.H. Return
26 - Safety relief system
27 - Three way valve
28 - C.H. sensor
29 - Burner assembly
30 - Water pressure sensor
31 - D.H.W. Switch
32 - Insulation
33 - Rear insulation
34 - Diverter valve Motor
35 - Manual air vent valve

OPERATING SCHEME

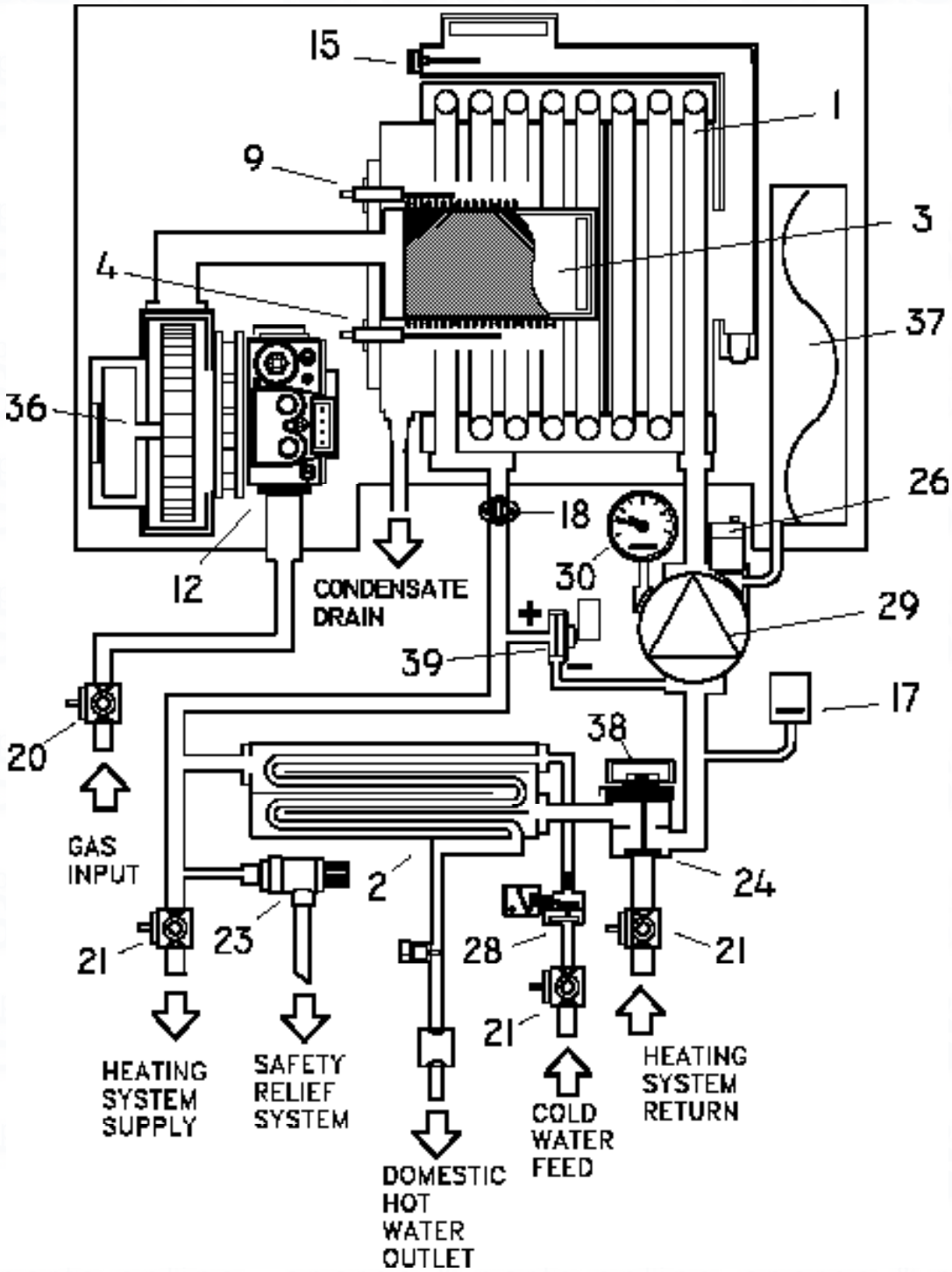

Fig. 2

KEY

1 - Heat exchanger
2 - Heat exchanger for D.H.W.
3 - Burner
4 - Sensing electrode
8 - Condensing trap
9 - Ignition electrode
12 - Gas valve
15 - Temperature flue sensor
17 - Low water pressure switch
18 - Overheat cut-off thermostat
20 - Gas service cock
21 - Compression ball valves
23 - Safety relief system
24 - Diverter valve
26 - Auto air vent valve
28 - Pressure switch
29 - Circulating pump
30 - Water pressure gauge
36 - Fan
37 - Expansion tank
38 - Diverter valve Motor
39 - Differential water pressure switch

SECTION 1 **INTRODUCTION**

1.1 The Ravenheat boiler is for the production of central and domestic hot water combined in one unit.
It is fitted with an automatic domestic hot water priority valve.
A Summer/winter switch is fitted to the left hand side of the control panel.
With the Summer only switch position being for domestic hot water.
The summer/winter position being for central heating with domestic hot water priority.
The boiler is equipped with a front cover which can be removed for servicing. The data badge with technical data is placed on the lower part of the left hand side panel.

1.2 Fig.1 Illustrates the general layout of components.
Fig.2 Illustrates the operating principles described in section 2.

SECTION 2

2.1 DESCRIPTION OF CONTROL SYSTEM AND SEQUENCE OF OPERATION

2.2 Domestic hot water mode
When the appliance is in rest mode with the mains neon and switch on.
Switch the summer/winter switch to Summer position, with the heating circuit charged with water (above 1 bar). If the domestic hot water tap is turned on, the boiler will function in the following sequence:

2.2.1 The pump starts.
The fan starts and sends a signal back to the ignition board that the fan is running .

2.2.2 The spark ignition system is powered which in turn commences the spark igniter to operate and light the burner.
At this point the ignition board opens the gas valve to light the burner.

2.2.3 When the electrode sensor senses the signal of the burner, the spark igniter stops.

2.2.4 From the fan speed setting the boiler increases to the maximum permissible speed over a period of 5 seconds and will remain at its maximum required power until its maximum regulated temperature.

2.2.5 When the domestic hot water tap is closed the diverter valve goes back into rest mode, the burner is shut down along with the fan which is also switched off.

2.2.6 Central heating mode

2.2.7 If the switch is positioned on winter with a demand for heat to supply radiators, etc ,with heating circuit fully charged so as to operate the low water sensor device the boiler will start in the same way as domestic hot water mode .
As the heating sensor reaches temperature the fan speed modulates down.
When starting, the fan will always start at the set-point speed.

2.2.8 On the control panel are mounted two potentiometers (thermostats) these control the temperature. One is for domestic hot water and the other for heating.

2.2.9 The boiler is fitted with an anti-cycling device on the control board. This delays the boiler from re-firing over a 10 minute.
If the heating temperature goes 20°C below the set point, the burner restarts immediately.
The domestic hot water will always take priority and is unaffected by the anti-cycling device.

GENERAL FUNCTION

2.3 Central Heating Mode

2.3.1 A potentiometer installed on the panel instruments permits regulation of the boiler to partial heating requirements, between maximum and minimum settings.

2.3.2 Air is drawn by the fan for combustion.

2.3.3 The fan also forces exhaust gas through the flue to the outside, this creates a lesser pressure in the sealed combustion chamber, thus sucking in combustion air, through the inlet duct.

2.3.4 The boiler water temperature is automatically controlled by a built in thermostat

2.3.5 Interior space temperature is set by the room thermostat to be installed in the heating system. The boiler already carries connection terminals for this thermostat, as well as for a timeclock.
The burner continues to operate until it is stopped by the timer or one of the thermostats

2.3.6 When the internal C.H. temperature sensor intervenes the burner shuts down. The fan stops but the pump continues to operate.

2.3.7 When the room thermostats intervene the burner shuts down. The fan stops and the pump after 3 minutes turns off.

2.3.8 In summer position an anti-block of the pump is included. Every day the pump is powered for a period of 2 minutes.
The boiler also incorporates an anti-block system which powers the pump every 24 hours, allowing it operate for 2 minutes if the boiler has not been in use. This operation may in some cases be heard for a short period when the pump has been activated.

2.4 Domestic hot water mode

2.4.1 The heat exchanger in the D.H.W. circuit is a stainless steel plate heat exchanger water to water, and domestic water is heated by converting the water in the central heating circuit. The transference of heat is very high because the two fluids move in a counter direction flow to each other.

2.4.2 Switch 1a Fig.27 in the winter position. When a hot water tap is turned on a diaphragm diverter valve excludes the central heating circuit, the boiler automatically modulates to maintain the domestic hot water at a constant temperature. Water temperature can be regulated using the D.H.W. thermostat located on the front control panel.

2.4.3 When domestic hot water is being drawn the burner and pump perform as they do during central heating except that the burner is commanded by the D.H.W. thermostat.

2.4.4 When D.H.W. is no longer called for the boiler automatically returns to the central heating mode.

2.4.5 Switch 1a in the Fig.27 in summer position The boiler functions like an automatic gas hot water heater When D.H.W. is no longer required the burner and fan immediately turn off.
This also takes place when switch 1a is on Winter if there is no demand for heat to the central heating system or until the room thermostat/time clock demands for central heating circuit.

2.5 SAFETY DEVICE

In both central heating and domestic hot water mode safe operating is ensured by a control board shuts off the main burner if the fan stops or the flue or combustion air intake duct is obstructed

2.5.1 An overheat cut off thermostat acts to turn of the burner to resetable “lockout” (Fig. 27) .

2.5.2 A safety valve is fitted on the central heating circuit set at 3 bar.

2.5.3 A low water pressure switch set at 0.4 bar is fitted on heating circuit.

OVERALL DIMENSION

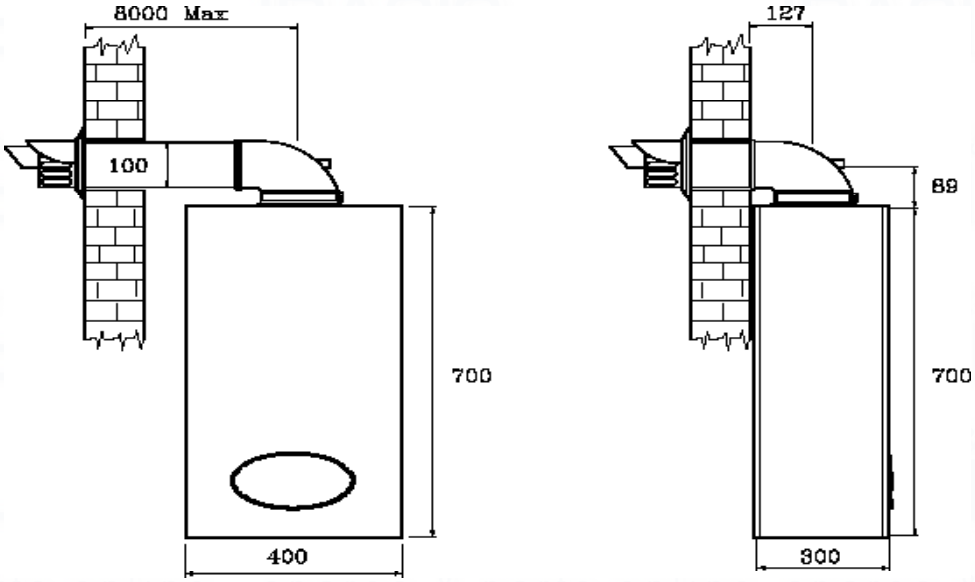

Fig. 3

AVAILABLE PUMP HEAD
Fig.4

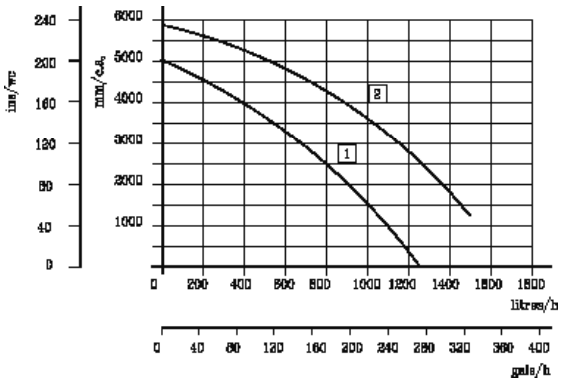

PRESSURE DROP ACROSS APPLIANCE
Fig.5

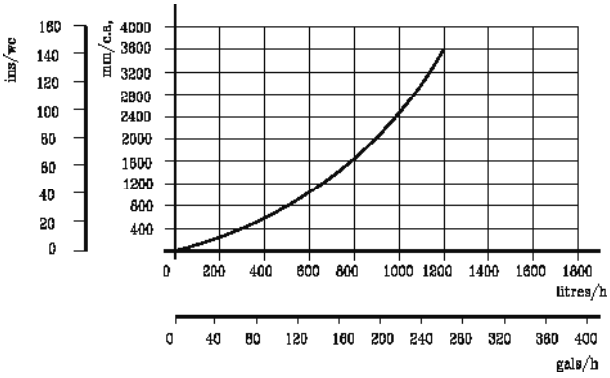

CSI 120 (T) Low Nox

TABLE 1

NATURAL GAS (G 20) I_{2H} - II_{2H3+}

NOMINAL HEAT INPUT NET QMS	26.0 kW	
MINIMUM HEAT INPUT NET	5.78 kW	
NOMINAL HEAT OUTPUT	25.7 kW	
NOMINAL HEAT OUTPUT CONDENSING	28.8 kW	
MINIMUM HEAT OUTPUT	5.72 kW	
MINIMUM HEAT OUTPUT CONDENSING	6.41 kW	
GAS RATE	max 2.7 m^3/h	
AFTER 10 MINUTES	min 0.6 m^3/h	
INLET PRESSURE	20 mbar	
FAN SPEED C.H.	Max 175 Hz min 47 Hz	Combustion % CO_2 : G20 - 9.0 (+ 0.2 / - 0.5) with the Case OFF
BURNER INJECTORS	Nr. 1 x 5.6	
ELECTRICAL SUPPLY	230 V ~ 50 HZ	
POWER CONSUMPTION	160 W	
EXTERNAL FUSE RATING	3A	
INTERNAL FUSE	F1 - 3.15 A / F2 - 315 mA (20 mm to BS 4265)	
DRY WEIGHT	40 kg	
WATER CONTENT C.H.	2.0 litre	
WATER CONTENT	0.5 litre	
GAS SUPPLY CONNECTION	15 mm compression isolating valve	
FLOW CONNECTION C.H.	22 mm compression isolating valve	
RETURN CONNECTION C.H.	22 mm compression isolating valve	
INLET CONNECTION D.H.W.	15 mm compression isolating valve	
OUTLET CONNECTION D.H.W.	15 mm compression valve	
SAFETY DISCHARGE C.H.	15 mm copper pipe	
CONDENSATION DRAIN	3/4” (21.5 mm) push fit over flow	
MAX COLD WATER CAPACITY WITHOUT ADDITIONAL EXPANSION VESSEL 110 LITRE		
SEALED WATER SYSTEM C.H.		
MAX PRESSURE PHS	2.5 bar	
MINIMUM WORKING PRESSURE	0.5 bar	
7 LITRES EXPANSION VESSEL PRE-CHARGE-PRESSURE	0.5 bar	
CENTRAL HEATING OPERATING TEMPERATURE	MAX 85°C	min 40°C
DESIGN FLOW RATE 1383 l/h 20 °C RISE		
MINIMUM FLOW RATE C.H. 503 l/min		
D.H.W. FLOW RATE 30 °C rise	15.4 l/min	
D.H.W. FLOW RATE 35 °C rise	13.2 l/min	
D.H.W. FLOW RATE 40 °C rise	11.5 l/min	10°C inlet temperature
D.H.W. TEMPERATURE	Max 60 °C	min 40 °C
FAN SPEED D.H.W.	Max 205 Hz	min 47 Hz
Qmw Input Net	Max 32.5 kW	min 5.78 kW
D.H.W. PRESSURE PMW	Max 10 bar (147 p.s.i.)	
D.H.W. PRESSURE PMW	min 0.8 bar (118 p.s.i.)	**To obtain heat input 1.2 bar**
D.H.W. MINIMUM FLOW RATE	3 l/min	
FLUE OUTLET NOM. DIAMETER 100 mm specially supplied with boilers (If required)		
DESTINATION: AT, DK, FI, SE	CATEGORY I_{2H}	
DESTINATION: GB, IE, CH, ES, IT, PT	CATEGORY II_{2H3+}	
FLUE TYPE - C_{13} - C_{33} - C_{53}	NO_x 5	SEDBUK A

CSI 120 (T) Low Nox

TABLE 1/A

LPG (G 30 - G 31) I_{3+} - II_{2H3+}

NOMINAL HEAT INPUT NET QMS	26.0 kW		
MINIMUM HEAT INPUT NET	5.78 kW		
NOMINAL HEAT OUTPUT	25.7 kW		
NOMINAL HEAT OUTPUT CONDENSING	28.8 kW		
MINIMUM HEAT OUTPUT	5.72 kW		
MINIMUM HEAT OUTPUT CONDENSING	6.41 kW		
GAS RATE	max	G31 0.9 m^3/h	G30 0.7 m^3/h
AFTER 10 MINUTES	min	0.4 m^3/h	0.3 m^3/h
INLET PRESSURE	G31 37 mbar	G30 28-30 mbar	
FAN SPEED C.H.	Max 160 Hz min 44 Hz	Combusiton % CO_2 with the Case OFF	: G31 - 10.2 (+ 0.2 / - 0.5) G30 - 11.0 (+ 0.2 / - 0.5)
BURNER INJECTORS	Nr. 1 x 5.6		
ELECTRICAL SUPPLY	230 V ~ 50 HZ		
POWER CONSUMPTION	160 W		
EXTERNAL FUSE RATING	3A		
INTERNAL FUSE	F1 - 3.15 A / F2 - 315 mA (20 mm to BS 4265)		
DRY WEIGHT	40 kg		
WATER CONTENT C.H.	2.0 litre		
WATER CONTENT	0.5 litre		
GAS SUPPLY CONNECTION	15 mm compression isolating valve		
FLOW CONNECTION C.H.	22 mm compression isolating valve		
RETURN CONNECTION C.H.	22 mm compression isolating valve		
INLET CONNECTION D.H.W.	15 mm compression isolating valve		
OUTLET CONNECTION D.H.W.	15 mm compression valve		
SAFETY DISCHARGE C.H.	15 mm copper pipe		
CONDENSATION DRAIN	3/4" (21.5 mm) push fit over flow		
MAX COLD WATER CAPACITY WITHOUT ADDITIONAL EXPANSION VESSEL 110 LITRE			
SEALED WATER SYSTEM C.H.			
MAX PRESSURE PHS	2.5 bar		
MINIMUM WORKING PRESSURE	0.5 bar		
7 LITRES EXPANSION VESSEL PRE-CHARGE-PRESSURE	0.5 bar		
CENTRAL HEATING OPERATING TEMPERATURE	MAX 85°C	min 40°C	
DESIGN FLOW RATE 1383 l/h 20 °C RISE			
MINIMUM FLOW RATE C.H. 503 l/min			
D.H.W. FLOW RATE 30 °C rise	15.4 l/min		
D.H.W. FLOW RATE 35 °C rise	13.2 l/min		
D.H.W. FLOW RATE 40 °C rise	11.5 l/min	10°C inlet temperature	
D.H.W. TEMPERATURE	Max 60 °C	min 40 °C	
FAN SPEED D.H.W.	Max 190 Hz	min 44 Hz	
Qmw Input Net	Max 32.5 kW	min 5.78 kW	
D.H.W. PRESSURE PMW	Max 10 bar (147 p.s.i.)		
D.H.W. PRESSURE PMW	min 0.8 bar (118 p.s.i.)	**To obtain heat input 1.2 bar**	
D.H.W. MINIMUM FLOW RATE	3 l/min		
FLUE OUTLET NOM. DIAMETER 100 mm specially supplied with boilers (If required)			
DESTINATION: BE, FR	CATEGORY I_{3+}		
DESTINATION: GB, IE, CH, ES, IT, PT	CATEGORY II_{2H3+}		
FLUE TYPE - C_{13} - C_{33} - C_{53}	NO_x 5	SEDBUK	A

CSI 150 (T) Low Nox

TABLE 1

NATURAL GAS (G 20) I_{2H} - II_{2H3+}

NOMINAL HEAT INPUT NET QMS	32.0 kW	
MINIMUM HEAT INPUT NET	8.0 kW	
NOMINAL HEAT OUTPUT	31.7 kW	
NOMINAL HEAT OUTPUT CONDENSING	34.9 kW	
MINIMUM HEAT OUTPUT	7.93 kW	
MINIMUM HEAT OUTPUT CONDENSING	8.73 kW	
GAS RATE	max	3.4 m^3/h
AFTER 10 MINUTES	min	0.85 m^3/h
INLET PRESSURE	20 mbar	
FAN SPEED C.H.	Max 180 Hz min 53 Hz	Combustion % CO_2 : G20 - 9.0 (+ 0.2 / - 0.5) with the Case OFF
BURNER INJECTORS	Nr. 1 x 6	
ELECTRICAL SUPPLY	230 V ~ 50 HZ	
POWER CONSUMPTION	160 W	
EXTERNAL FUSE RATING	3A	
INTERNAL FUSE	F1 - 3.15 A / F2 - 315 mA (20 mm to BS 4265)	
DRY WEIGHT	42 kg	
WATER CONTENT C.H.	2.0 litre	
WATER CONTENT	0.5 litre	
GAS SUPPLY CONNECTION	15 mm compression isolating valve	
FLOW CONNECTION C.H.	22 mm compression isolating valve	
RETURN CONNECTION C.H.	22 mm compression isolating valve	
INLET CONNECTION D.H.W.	15 mm compression isolating valve	
OUTLET CONNECTION D.H.W.	15 mm compression valve	
SAFETY DISCHARGE C.H.	15 mm copper pipe	
CONDENSATION DRAIN	3/4” (21.5 mm) push fit over flow	
MAX COLD WATER CAPACITY WITHOUT ADDITIONAL EXPANSION VESSEL 110 LITRE		
SEALED WATER SYSTEM C.H.		
MAX PRESSURE PHS	2.5 bar	
MINIMUM WORKING PRESSURE	0.5 bar	
7 LITRES EXPANSION VESSEL PRE-CHARGE-PRESSURE	0.5 bar	
CENTRAL HEATING OPERATING TEMPERATURE	MAX 85°C	min 40°C
DESIGN FLOW RATE 1811 l/h 20 °C RISE		
MINIMUM FLOW RATE C.H. 503 l/min		
D.H.W. FLOW RATE 30 °C rise	20.1 l/min	
D.H.W. FLOW RATE 35 °C rise	17.3 l/min	
D.H.W. FLOW RATE 40 °C rise	15.1 l/min	10°C inlet temperature
D.H.W. TEMPERATURE	Max 60 °C	min 40 °C
FAN SPEED D.H.W.	Max 210 Hz	min 53 Hz
Qmw Input Net	Max 42.5 kW	min 8.0 kW
D.H.W. PRESSURE PMW	Max 10 bar (147 p.s.i.)	
D.H.W. PRESSURE PMW	min 0.8 bar (118 p.s.i.)	**To obtain heat input 1.2 bar**
D.H.W. MINIMUM FLOW RATE	3 l/min	
FLUE OUTLET NOM. DIAMETER 100 mm specially supplied with boilers (If required)		
DESTINATION: AT, DK, FI, SE	CATEGORY I_{2H}	
DESTINATION: GB, IE, CH, ES, IT, PT	CATEGORY II_{2H3+}	
FLUE TYPE - C_{13} - C_{33} - C_{53}	NO_X 5	SEDBUK A

TABLE 1/A

CSI 150 (T) Low Nox

LPG (G 30 - G 31) I_{3+} - II_{2H3+}

NOMINAL HEAT INPUT NET QMS	32.0 kW				
MINIMUM HEAT INPUT NET	8.0 kW				
NOMINAL HEAT OUTPUT	31.7 kW				
NOMINAL HEAT OUTPUT CONDENSING	34.9 kW				
MINIMUM HEAT OUTPUT	7.93 kW				
MINIMUM HEAT OUTPUT CONDENSING	9.06 kW				
GAS RATE	max	G31	1.3 m^3/h	G30	0.99 m^3/h
AFTER 10 MINUTES	min		0.3 m^3/h		0.25 m^3/h
INLET PRESSURE	G31 37 mbar	G30 28-30 mbar			
FAN SPEED C.H.	Max 155 Hz	Combusiton	% CO_2	: G31 - 10.2 (+ 0.2 / - 0.5)	
	min 48 Hz	with the Case OFF		G30 - 11.0 (+ 0.2 / - 0.5)	
BURNER INJECTORS	Nr. 1 x 6				
ELECTRICAL SUPPLY	230 V ~ 50 HZ				
POWER CONSUMPTION	160 W				
EXTERNAL FUSE RATING	3A				
INTERNAL FUSE	F1 - 3.15 A / F2 - 315 mA (20 mm to BS 4265)				
DRY WEIGHT	42 kg				
WATER CONTENT C.H.	2.0 litre				
WATER CONTENT	0.5 litre				
GAS SUPPLY CONNECTION	15 mm compression isolating valve				
FLOW CONNECTION C.H.	22 mm compression isolating valve				
RETURN CONNECTION C.H.	22 mm compression isolating valve				
INLET CONNECTION D.H.W.	15 mm compression isolating valve				
OUTLET CONNECTION D.H.W.	15 mm compression valve				
SAFETY DISCHARGE C.H.	15 mm copper pipe				
CONDENSATION DRAIN	3/4” (21.5 mm) push fit over flow				
MAX COLD WATER CAPACITY WITHOUT ADDITIONAL EXPANSION VESSEL 110 LITRE					
SEALED WATER SYSTEM C.H.					
MAX PRESSURE PHS	2.5 bar				
MINIMUM WORKING PRESSURE	0.5 bar				
7 LITRES EXPANSION VESSEL PRE-CHARGE-PRESSURE	0.5 bar				
CENTRAL HEATING OPERATING TEMPERATURE	MAX 85°C	min 40°C			
DESIGN FLOW RATE 1811 l/h 20 °C RISE					
MINIMUM FLOW RATE C.H. 503 l/min					
D.H.W. FLOW RATE 30 °C rise	20.1 l/min				
D.H.W. FLOW RATE 35 °C rise	17.3 l/min				
D.H.W. FLOW RATE 40 °C rise	15.1 l/min	10°C inlet temperature			
D.H.W. TEMPERATURE	Max 60 °C	min 40 °C			
FAN SPEED D.H.W.	Max 195 Hz	min 48 Hz			
Qmw Input Net	Max 42.5 kW	min 8.0 kW			
D.H.W. PRESSURE PMW	Max 10 bar (147 p.s.i.)				
D.H.W. PRESSURE PMW	min 0.8 bar (118 p.s.i.)	**To obtain heat input 1.2 bar**			
D.H.W. MINIMUM FLOW RATE	3 l/min				
FLUE OUTLET NOM. DIAMETER 100 mm specially supplied with boilers (If required)					
DESTINATION: AT, DK, FI, SE	CATEGORY I_{2H}				
DESTINATION: GB, IE, CH, ES, IT, PT	CATEGORY II_{2H3+}				
FLUE TYPE - C_{13} - C_{33} - C_{53}	NO_X 5	SEDBUK	A		

SECTION 4 GENERAL REQUIREMENTS

4.1 SAFETY

Gas Safety (Installation and Use) Regulations, 1994 and amended 2000.

It is law that all gas appliances are installed and serviced by a CORGI registered installer in accordance with the above regulations and these installation instructions. All CORGI registered installers carry a CORGI I.D. card and have a registration number. Both should be recorded in your boiler log book. You can check your installer by calling CORGI direct on: 01256 732300. Failure to install appliances correctly could lead to prosecution. It is in your own interest, and that of safety, to ensure the law is complied with. Check the boiler and flue is the correct type for installation. The installation of the boiler MUST be in accordance with the latest I.E.E. (BS 7671) Wiring Regulations, local building regulations, bye-laws of the local water authority, the building regulations and the Building Standards (Scotland) and any relevant requirements of the local authority.

4.1.1 GENERAL INFORMATION

Both the user and the manufacturer rely heavily on the installer, whose job it is to install the combination boiler and connect it to a correctly designed heating system. Acquaint yourself with the British Standards concerning installation requirements. If you need advice on any points your Ravenheat Technical Services Office would be pleased to help. It is recommended that tools suitable for brass fittings are used, and have a capability to accomodate hexagon sizes up to 50 mms.

CODES OF PRACTICE/Ref: Documents

Detailed recommendations are contained in the following British Standard Codes of Practice:

BS.6891 Low pressure installation pipes.

BS.6798 Installation of gas fired hot water boilers of rated input not exceeding 60 kW.

BS.5449 Forced circulation hot water systems.

BS.5546 Installation of gas hot water supplies domestic purposes (2ndFamily Gases).

BS.5440: 1 Flues (for gas appliances of rated input not exceeding 60 kW).

BS.5440: 2 Ventilation (for gas appliances of rated input not exceeding 60 kW).

DD 189: 1990 Discharge of condensate.

Health & Safety Document No.635
The Electricity at Work Regulations, 1989.

The manufacturer's notes must NOT be taken, in any way, as overriding statutory obligations.

IMPORTANT:
These appliances are CE certificated for safety and performance. It is, therefore, important that no external control devices e.g. flue dampers, economisers etc., are directly connected to this appliance unless covered by these Installation and Service Instructions or as otherwise recommended by Ravenheat in writing. If in doubt please enquire.

Any direct connection of a control device not approved by Ravenheat could invalidate the certification and the normal appliance warranty.
It could also infringe the Gas Safety regulations and the above regulations.

NOTE:
The Ravenheat CSI combination boiler has been tested and examined by BG, and is certified to comply with PrEN 483 and BS EN 625.
Manufactures instructions must NOT be taken in any way as overriding statutory obligations.
If in doubt on any point please consult Ravenheat Manufacturing Ltd.

4.2 LOCATION OF BOILER

4.2.1 Siting of Ravenheat CSI Combi Boiler must be as follows.
The position of installation should be within the building, unless otherwise protected by a suitable enclosure.
Adequate space for installation, servicing and air circulation around boiler must be allowed for.
The Ravenheat CSI Combi Boiler must be fitted on a flat and vertical wall capable of adequately supporting the weight of the boiler and any ancillary equipment.
The appliance may be installed on a combustible wall subject to the requirements of the Local Authority and Building Regulations.

LPG versions of this appliance shall not be installed in cellars or basements.

4.3 CLEARANCES AROUND THE APPLIANCE

4.3.1 The following minimum free spaces, required for installation inspection and servicing, must be left around the boiler
18 inches (450 mm) in front
5 inches (125 mm) above
6 inches (150 mm) below
0.2 inches (5 mm) on each side
1 inch (25 mm) in front when installed in a cupboard.

4.4 IMPORTANT NOTICE

4.4.1 For installation into timber framed buildings, please refer to the Institute of Gas Engineers Document IGE/UP/7 instead of DM2.
If in doubt advice must be sought from the local gas supplier The combination boiler may be installed in any room or internal space, although particular attention is drawn to the requirements of the current I.E.E. Wiring Regulations, and in Scotland the electrical provisions of the Building Regulations applicable in Scotland, with respect to the installation of the combination boiler in a room or internal space containing a bath or shower. Where a room sealed appliance is installed in a room containing a bath or shower, any electrical switch or appliance control, utilising mains electricity should be so situated that it cannot be touched by a person using a bath or shower.
A compartment used to enclose the combination boiler MUST be designed and constructed specifically for this purpose. An existing cupboard, or compartment, may be used provided it is modified accordingly Samples of the CSI combination boiler have been examined by B.G. Technology Notified Body, and is certified to comply with the essential requirements of the Gas Appliance
Directive 90/396/EEC, the Low Voltage
Directive 72/23/EEC and shows compliance with the Electro Magnetic Compatibility
Directive 89/336/EEC and are therefore permitted to carry the CE Mark.

The appliance has been tested and approved by the WRc as meeting the requirements of G3 and L of the Building regulations and water Bylaws Scheme - Approved Products.

4.5 GAS SUPPLY

4.5.1 A gas meter is connected to the service pipe by the Local Gas Region or the Local Gas Region contractor. An existing meter should be checked preferably by the Gas Region to ensure that the meter is adequate to deal with the rate of gas supply required for all appliances it serves. Installation pipes should be fitted in accordance with BS 6891. Pipework from the meter to the boiler must be of adequate size (22 mm) min To within at least 3 metre of the boiler (15 mm) min. can then be used for remaining pipe work to the appliance. A smaller size than the boiler inlet gas connection should not be used The complete installation must be tested for soundness as described in the above Code.
N.B. if the gas supply for the boiler serves other appliances ensure an adequate supply is available both to the boiler and the other appliances when they are in use at the same time.

4.6 FLUE SYSTEM

4.6.1 The terminal should be located where dispersal of combustion products is not impeded and with due regard for the damage or discolouration that might occur to building products in the vicinity (see fig. 6).
The terminal must not be located in a place where it is likely to cause a nuisance In cold and/or humid weather water vapour may condense on leaving the flue terminal.
The effect of such steaming must be considered.
The terminal must not be closer than 25 mm (1 in) to any combustible material For protection of combustibles, refer to BS 5440.1.
Where a flue terminal is installed less than 1000 mm. from a plastic, or painted gutter; or 500 mm from painted eaves, an aluminium shield 1000 mm. long, should be fitted to the underside of the gutter or painted surface.

Pluming will occur at the terminal so, where possible, terminal positions which could cause a nuisance should be avoided.
The flue must be installed in accordance with the recommendations of BS 5440: Part 1.

IMPORTANT NOTES
For greater flue lengths see alternative flue instructions. Flue must be positioned in a place not likely to cause a nuisance from pluming.

IMPORTANT NOTICE: If the flue terminates less a balcony, above the ground, or above a flat roof to which people have access, then a suitable **terminal guard** must be fitted **0001PRO06005/0.**
Fit only recommended **FLUE TERMINAL GUARD** by securing concentrically around terminal with screws.
Available on request from:

RAVENHEAT Manufacturing Ltd
Morley, Leeds, West Yorkshire
ENGLAND LS27 9ET - UK
Tel.0044(0)113 252 7007

IMPORTANT: The following notes are intended for general guidance.
The boiler MUST be installed so that the terminal is exposed to external air.

It is important that the position of the terminal allows the free passage of air across it at all tirnes.

Minimum acceptable spacing from the terminal to obstructions and ventnation opening are specified in Fig. 6.
Note positions: *Due to the terminal design, installation is possible with clearances less than those specified in BS 5440, Part 1*

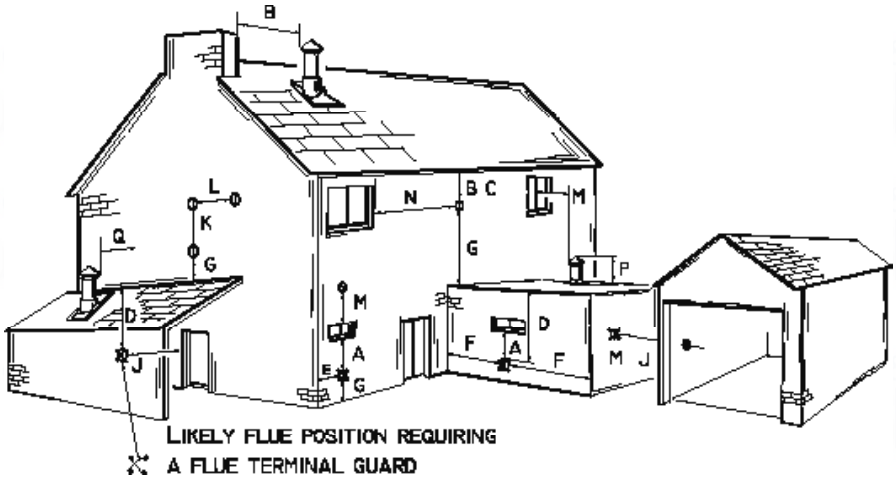

Fig.5

Terminal position for fan assisted boiler

(minimum distance)		mm
A -	Directly below an open window or other opening (e.g. air brick)	300
B -	Below gutters, soil pipes or drain pipes	75
C -	Below eaves	150
D -	Below balconies or car port roof	200
E -	From vertical drain pipes and soil pipes	150
F -	From internal or external corners	300
G -	Above ground or below balcony level	300
H -	From a surface facing a terminal	600
I -	From a terminal facing a terminal	1200
J -	From an opening in the car port (e.g. door window) into dwelling.	1200
K -	Vertically from a terminal on the same wall	1500
L -	Horizontally from a terminal on the same wall	300
M -	From adjacent wall to flue	300

NOTE: The flue must be terminated in a place not likely to cause a nuisance.

4.6.2 A concentric vertical flue kit is available for flueing applications up to a maximum height of 4 metres.
For further details see vertical flue installation instructions.

4.7 AIR SUPPLY

4.7.1 The following notes are intended for general guidance.
The room sealed fan flued boiler does not require a permanent air vent for combustion air supply.
Where installed in a cupboard or compartment ventilation is not required.

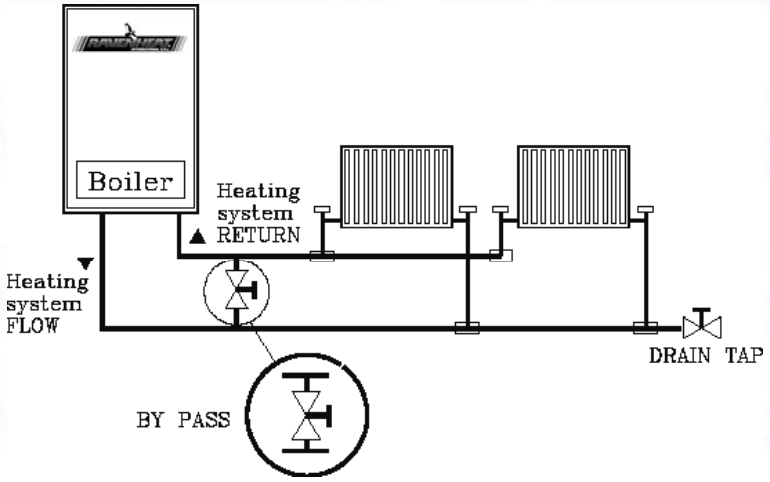

Fig.6

4.8 WATER CIRCULATION (central heating)

4.8.1 Detailed recommendations are given in BS 6798:1987/5449:1990 (for smallbore and microbore central heating systems). The following notes are given for general guidance.

4.8.2 Pipework
Copper tubing to BS 2871 1.1.1971 is recommended for water pipes. Jointing should be either with capillary soldered or with compression fittings.
Where possible pipes should have a gradient to ensure air is carried naturally to air release points and water flows naturally to drain taps. It should be ensured as far as possible that the appliance heat exchanger is not a natural collecting point for air except where providing useful heat, pipes should be insulated to prevent heat loss and to avoid freezing. Particular attention should be paid to pipes passing through ventilated spaces in roofs and under floors.

4.8.3 The water through the appliance heat exchanger circuit must exceed the min. 2.38 gals/min. (650 lt/h) when the burner is firing. It is important to ensure that this rate is achieved when sections of the system are shut off either manually or by automatic controls.
Therefore a by-pass must be fitted to the system (15 mm min.) (Fig. 6).
If the volume of circulating water is too low, the boiler water temperature will rise too rapidly. This could cause noise in the system or even cause the safety thermostat to trip.

4.8.4 Draining tap

These must be located in accessible positions to permit the draining of the whole system. The taps must be at least 15 mm nominal size and manufactured in accordance with BS 2870 1980.

4.8.5 Air release points

These must be fitted at all high points where air will naturally collect, and must be sited to facilitate complete filling of the system.

4.8.6 The appliance has an integral sealed expansion vessel to accommodate the increase of water volume when the system is heated.
It can accept up to 6 lts of expansion water. If the appliance is connected to a system with an unusually high water content, calculate the total expansion and add additional sealed expansion capacity as appropriate (Fig. 7). In general, modern systems will present no problem.

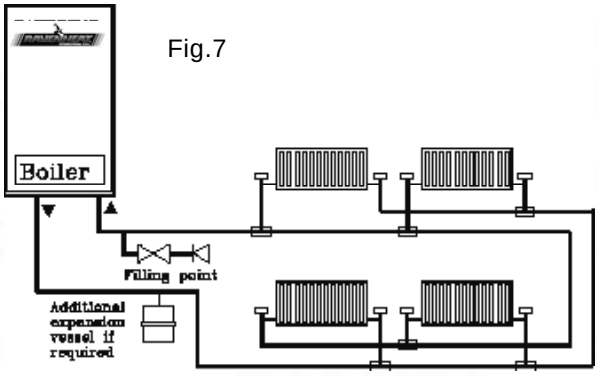

Fig.7

4.8.7 Mains water feed: central heating

There must be no direct connection to the mains water supply, even through a nonreturn valve, without the approval of the Local Water Authority.

4.8.8 Permissible methods of filling

Fig.8

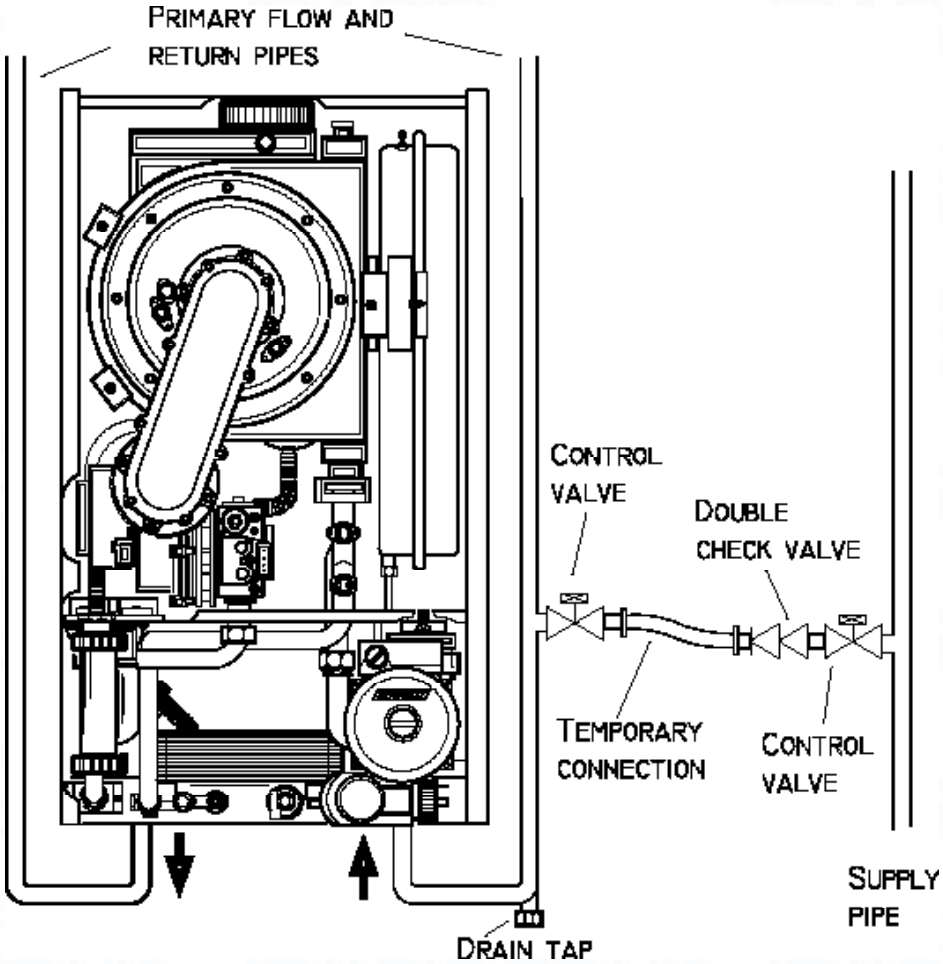

Figure depicts the requirements of Diagram R24.2a of the Water Supply (Water Fittings) regulations 1999.

SIZING OF ADDITIONAL EXPANSION VESSEL: TABLE 3

Deduct from the value given in the table the 7 litre vessel supplied.

Safety valve setting (bar)	3.0								
Vessel charge pressure (bar)	0.5				1.0			1.5	
Initial system pressure (bar)	0.5	1.0	1.5	2.0	1.0	1.5	2.0	1.5	2.0
Total water content of system	EXPANSION VESSEL VOLUME (LITRES)								
Litres									
25	2.1	3.5	6.5	13.7	2.7	4.7	10.3	3.9	8.3
50	4.2	7.0	12.9	27.5	5.4	9.5	20.6	7.8	16.5
75	6.3	10.5	19.4	41.3	8.2	14.2	30.9	11.7	24.8
100	8.3	14.0	25.9	55.1	10.9	19.0	41.2	15.6	33.1
125	10.4	17.5	32.4	68.9	13.6	23.7	51.5	19.5	41.3
150	12.5	21.0	38.8	82.6	16.3	28.5	61.8	23.4	49.6
175	14.6	24.5	45.3	96.4	19.1	33.2	72.1	27.3	57.9
200	16.7	28.0	51.8	110.2	21.8	38.0	82.4	31.2	66.2
225	18.7	31.5	58.3	124.0	24.5	42.7	92.7	35.1	74.5
250	20.8	35.0	64.7	137.7	27.2	47.5	103.0	39.0	82.7
275	22.9	38.5	71.2	151.5	30.0	52.2	113.3	42.9	91.0
300	25.0	42.0	77.7	165.3	32.7	57.0	123.6	46.8	99.3
325	27.0	45.5	84.1	179.1	35.7	61.7	133.9	50.7	107.6
350	29.1	49.0	90.6	192.8	38.1	66.5	144.2	54.6	115.8
375	31.2	52.5	97.1	206.6	40.9	71.2	154.5	58.5	124.1
400	33.3	56.0	103.6	220.4	43.6	76.0	164.8	62.4	132.4
425	35.4	59.5	110.1	239.2	46.3	80.7	175.1	66.3	140.7
450	37.5	63.0	116.5	247.9	49.0	85.5	185.4	70.2	148.9
475	39.6	66.5	123.0	261.7	51.8	90.2	195.7	74.1	157.2
500	41.6	70.0	125.9	275.5	54.5	95.0	206.0	78.0	165.5
For system volumes other than those given above, multiply the system volume by the factor across	0.0833	0.140	0.259	0.551	0.109	0.190	0.412	0.156	0.331

Note: This pressure can be increased up to 1.5 bar to suit high static head situations, see item 10, other appliance components in the SERVICING INSTRUCTIONS.

B) Where fitting of a make up vessel would be difficult, re pressurisation of the system can be done. See section on FILLING. If the capacity of the central heating system should exceed 110 Litres, an additional vessel should be installed on the return to the combination boiler from the heating system (Fig. 7). Guidance on vessel sizing is given in (Table 3).

Reference should be made to British Gas Publications, «Material and Installation Specifications for Domestic Central Heating and Hot Water». Draining taps should be at least 1/2" in BSP nominal size and be in accordance with BS 2879.

4.8.9 Installation to an existing central heating system

The combination boiler is designed to operate on a sealed system only. Therefore if the existing system is of the open water type it will have to be modified to comply with BS 5376 Part 2.

Before installing a new combination boiler to an existing system, flush out the old system with a recommended descaling agent.

If the boiler is installed in an existing system any unsuitable additives *MUST* be removed by thorough cleaning.

BS 7593:1992 details the steps necessary to clean domestic central heating system. Also check pipework and renew any corroded pipework or fittings. Valve glands must be repacked or replaced wherever necessary and any defective controls exchanged.

WATER TREATMENT

This boiler has a stainless steel heat exchanger Ravenheat recommended only the use of FERNOX- COPAL or SENTINEL X100 water treatment products, which must be used in accordance with the manufacturers instructions. For further information contact:

Fernox Manufacturing Co. Ltd.
Tel 01799 550811
Sentinel Division Betz Dearborn Ltd.
Tel. (0151) 424 5351

SALAMANDER CORROSION GUARD

Salamander (Eng) Ltd
Tel: (0121) 3780952 /4508

4.8.10 Hard water areas
If the area of installation is recognized as hard water, it is recommended that a suitable water treatment device is installed in the mains.
The water hardness can be determined by using the standard test paper or by referring to local water authority.

4.9 DOMESTIC WATER

4.9.1 The domestic hot water must be in accordance with the relevant recommendations of BS 5546. Copper tubing to BS 2871 1 is recommended for water carrying pipework and MUST be used for pipework carrying potable water.

4.10 ELECTRICAL SUPPLY

Warning: this appliance must be earthed

4.10.1 External wiring to the appliance must be carried out by a competent person and be in accordance with the current I.E.E. Regulations and local regulations which apply. The Ravenheat boiler is supplied for connection to a 230 V ~ 50 Hz single phase supply. **The supply must be fused at 3 A.**

NOTE. The method of connection to the electricity supply MUST facilitate complete electrical isolation of the appliance, by the use of a fused, double pole isolator, having a contact separation of at least 3 mm in all poles. The point of connection to the electricity supply must be readily accessible and adjacent to the appliance except, where the appliance is installed in a bathroom, this MUST be sited outside the bathroom.

SECTION 5 INSTALLATION

5.1 WARNING

5.1.1 It is MOST IMPORTANT that this appliance is installed in a VERTICAL POSITION, with the flue air duct passing through the wall.
Make sure flue slopes 2.5° down towards the boiler that is 45 mm/m fall per metre of flue length (Fig.9).

IMPORTANT NOTES :
This appliance will produce a plume of condensation in cool weather.This is due to the High Efficency and hence low flue gas temperature of the boiler.
See Optional extras (Fig.12).

5.2 DELIVERY

5.2.1 The appliance carton *containing*
a) boiler fully assembled with flue adaptor
b) installation instructions ,
user instructions and Benchmark log book
c) white paper template
d) hanging bracket
e) guarantee card
f) Polythene bag containing
- 2-22 mm compression ball valves complete with 3/4" washers
- 1-15 mm compression ball valves complete with 1/2" washers
- 1- 15 mm compression ball valve
- 2 coach bolts and wall plugs
- screws and dowels

5.3 UNPACKING OF BOILER

5.3.1 IMPORTANT: With regards to the Manual Handling Operations, 1992 Regulations, the following lift operation exceeds the recommended weight for a one man lift.

5.3.2
- Stand the boiler carton upright.
- Open the top of the carton.
- Rest the carton on the floor (keeping the flaps open).
- Turn the carton over with the boiler inside and then pull tha carton.
- Rest the boiler on the floor and remove the polystyrene guards.

5.4 POSITIONING OF THE BOILER

5.4.1 Remove the 2 lower and the 2 upper screws that secure of the front panel, and then lift off .

5.4.2 Unscrew the 4 screws that fasten the lower grating on the casing and remove it from the bottom of the casing.

5.4.3 Make sure the casing and screws are put to one side in a safe place.

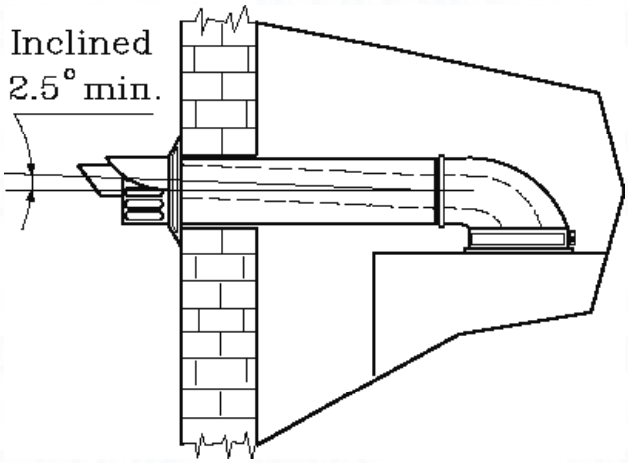

IMPORTANT :Please, lubricate the internal part of the seals before being fitted.

OPTIONAL EXTRAS: (See Table 7)

HORIZONTAL FLUE KIT BOX CONTAINING *(Fig 10)*

57 - Flue bend assembly
59 - Rubber seal Ø 60
60 - Sample pint
61 - Flue exhaust duct
62 - Air intake duct
127 - Terminal Rubber wall seal

Generally speaking,oils and greases are not suitable for the "peroxide -EPDM", therefore we suggest a correct lubrication using silicon-substances, for instance "Silikon Spray" (Arexons)or the same product from the company "Soltecno s.r.l.".

Fig 10

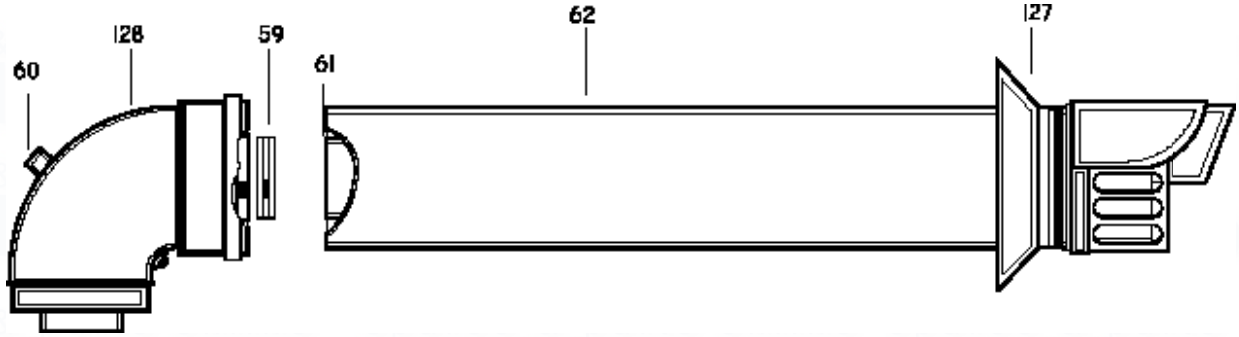

FLUE EXTENSION BOX CONTAINING (Fig. 11)
1000 mm flue extension duct as an extra cost only when requested for side and vertical flue applications

59 - Rubber seal Ø 60
63 - Air intake duct extension
64 - Flue exhaust duct extension

WARNING with horizontal concentric flue
Maximum allowable flue length 8 m
maximum No 7x1000 mm
Flue duct extension used with standard flue

Fig 11

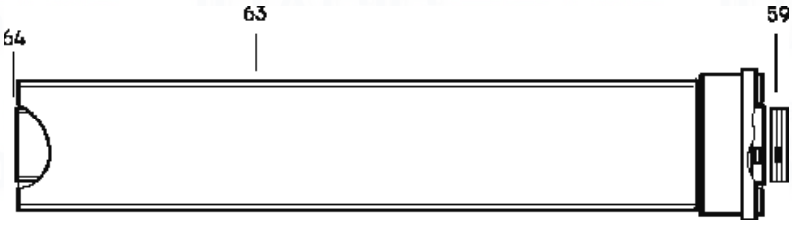

TYPE OF FLUE SYSTEM (All models) TABLE 6

Flue type	C_{13}		C_{33}		C_{53} [1]
Flue Diameter	60/100 (concentric)	80/125 (concentric)	60/100 (concentric)	80/125 (concentric)	80mm single pipe
Minimum length (m)	0.3	0.3	1.0 (vertical length)	1.0 (vertical length)	0.5
Maximum length (m)	8.0	23.0	13.0	26.0	43.0
Equivalent length of 45° bend (m)	0.5	1.25	0.5	1.25	1.25
Equivalent length of 90° bend (m)	1.0	2.5	1.0	2.5	2.5

OPTIONAL EXTRAS:

PLUME MANAGEMENT KIT *(Fig 12)*
Max 6000 mm flue extension duct as an extra cost only when requested to reduce pluming nuisance of condensation from 60/100 horizontal concentric flue.

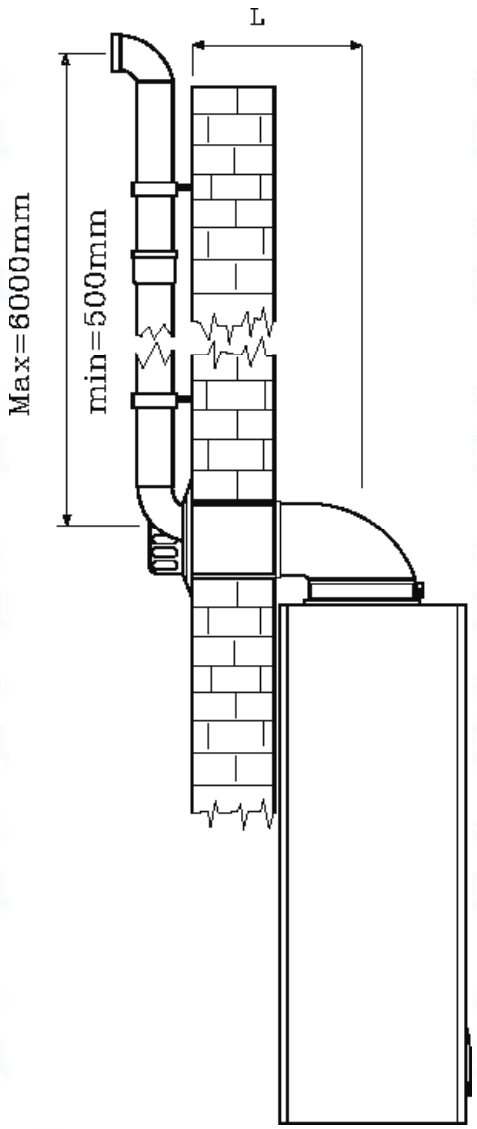

Plume Management Kit	
Maximum Length (mm) minimum length (mm)	6000 500
Equivalent length of 45° bend (mm) Equivalent length of 90° bend (mm)	500 1000
The Maximum permitted flue length is measured from the centre line of the flue terminal to the top of the outlet terminal	
IMPORTANT : Max flue length must not exceed 6 m with a horizontal concentric 60/100 flue of 3m (L)	

Plume Management Kit Part No

Part. No	Description
0019PRO11035/0	Flue Extension 60 L1000 Plume
0019CUR11035/0	90° Elbow bend 60 Plume
0019CUR11040/0	45° Elbow bend 60 Plume
0019TER11025/0	Horizontal terminal 60/100 Plume
0019GRI11020/0	Horizontal elbow header 60 Plume

IMPORTANT :Please, lubricate the internal part of the seals before being fitted.

ACCESSORIES CONCENTRIC FLUE 60/100 EXTRAS:

TABLE 7

Part. No	Description
0019PRO11005/0	Flue Extension 60/100 L500
0019PRO11010/0	Flue Extension 60/100 L1000
0019CUR11005/0	45° Elbow bend 60/100
0019CUR11010/0	90° Elbow bend 60/100
0019TER11005/0	Horizontal terminal 60/100
0019GRI11015/0	Horizontal terminal header 60/100
0019TER06010/0	Vertical flue Terminal

5.5 INSTALLING THE APPLIANCE FOR REAR FLUE OUTLET (Fig. 13-14-15-16)

5.5.1 Use adhesive tape to attach the template to the wall, making sure that the centre line is vertical.

- Mark the two holes for to fix the hanging bracket on the wall as well as the centre of the flue duct.
- Detach the template from the wall.
- Use a 10 mm. dia drill to make the 2 holes. Insert the plastic expansion plugs.
- Cut or core drill a 105 mm. dia hole for inserting the flue duct.
- Locate the wall hanging braket and fix by the two coach bolts

Fit the elbow header positioning it towards the required direction (Fig 13).

5.5.2 Make sure that the rubber Ø 60 is locate into the flue elbow header .

5.5.3 If using horizontal flue duct and it is too long it can be shortened .
Shoud it be necessary to cut the flue, always cut equal amounts from both inner and outer pipes.
Always cut the end furthest from the terminal. cut end must de-burred.
NOTE : Add 30mm to overall flue length to allow for cover plate. (Fig.10 - item 127)

5.5.4 Insert the flue assembly into the wall, being careful to make sure that the outer air duct comes flush to the inner surface of the wall.

5.5.5 Lift the boiler on to the wall (Fig.13), locating onto the fixing jig wall bracket.

5.5.6 Working above the boiler pull the flue exhaust duct towards the boiler in order to engage tube 61 into its header.
Position flue into elbow header and push so as to locate inner and outer flue correctly ensuring good seal is made with o rings.

5.5.7 Fit terminal cover plate and if necessary terminal guard.

5.5.8 Extensions kits are available to order for flue extension of up to 7 metres total length.(Fig.16A).

5.5.9 Each extension length extends the pipe by approximately 1000 mm long up to a maximum of seven extensions
Pipeline length can be established using the instructions in section 5.5 for rear flue outlets and section 5.7 for side flue outlets. Extensions must be installed with the widened end of the air intake pipe and the tapered end of the flue pipe aimed towards the exhaust terminal.

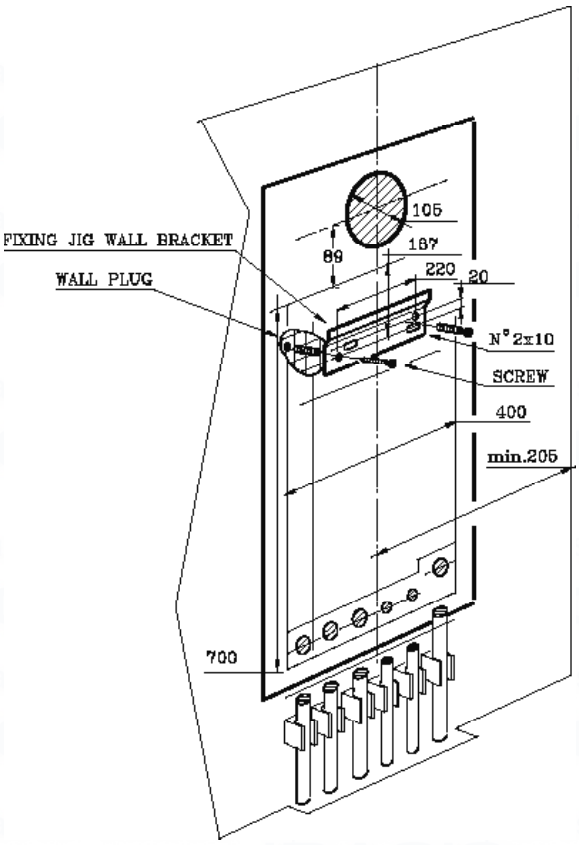

Extensions must be installed with the widened end of the air intake pipe and the tapered end of the flue pipe aimed towards the exhaust terminal. Extensions must be joined together with the standard terminal pipe, and inserted in each other as far as they can go.
If an extension must be shortened, this must be done from the straight end, and not from the widened or tapered end. To measure the pipeline properly all components must be assembled and total length measured before cutting. The straight end of the extension connects to the boiler. The flue output and air intake pipes fits into the boiler header until it stops. (Fig. 16- Fig. 16A).
When cutting both inner and outer ducts of the extension, always ensure that the reduced end (male) of the inner and outer duct are square and to the same length.
All joints must be sealed with the rubber seals supplied.
It is important to put the centering spacer, supplied with the unit, inside between the two pipes, from the side opposite the extension's straight end.

NOTE: a suitable support bracket is available from Ravenheat Manufacturing and should be used to support flue length at least every 1.8 metre preferably at each joint this bracket should be secured to wall and flue duct.

5.5.10 IN LINE FLUE BEND

Measure the distance between the flue bends or the flue/terminal assembly. The measurements should be taken from the outer edge of the flue and bend (Fig. 18).

IMPORTANT: inline flue bend - 1000 mm must be deducted from overall length for each 90°bend. Obtuse flue bend - 500 mm must be deducted from overall length for each 135° bend (Table 6).

Fig 14

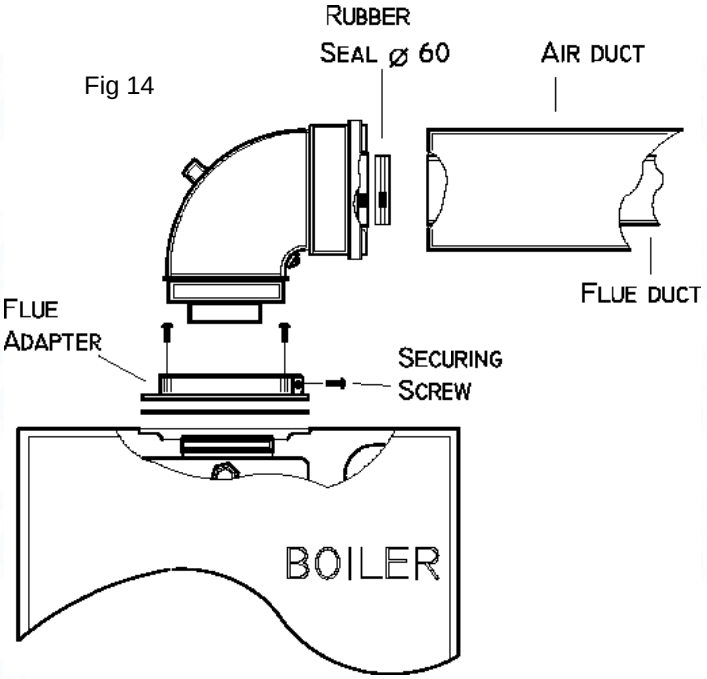

INTAKE AND EXHAUST TERMINAL COMPONENTS

5.6 COMPLETING BOILER INSTALLATION

5.6.1 Reassemble the outer casing (sect 5.4) in reverse order.

Fig.15

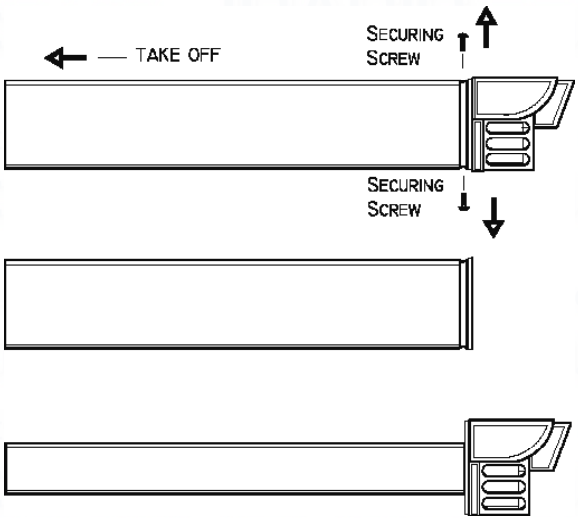

IMPORTANT :Please, lubricate the internal part of the seals before being fitted.

Fig.16

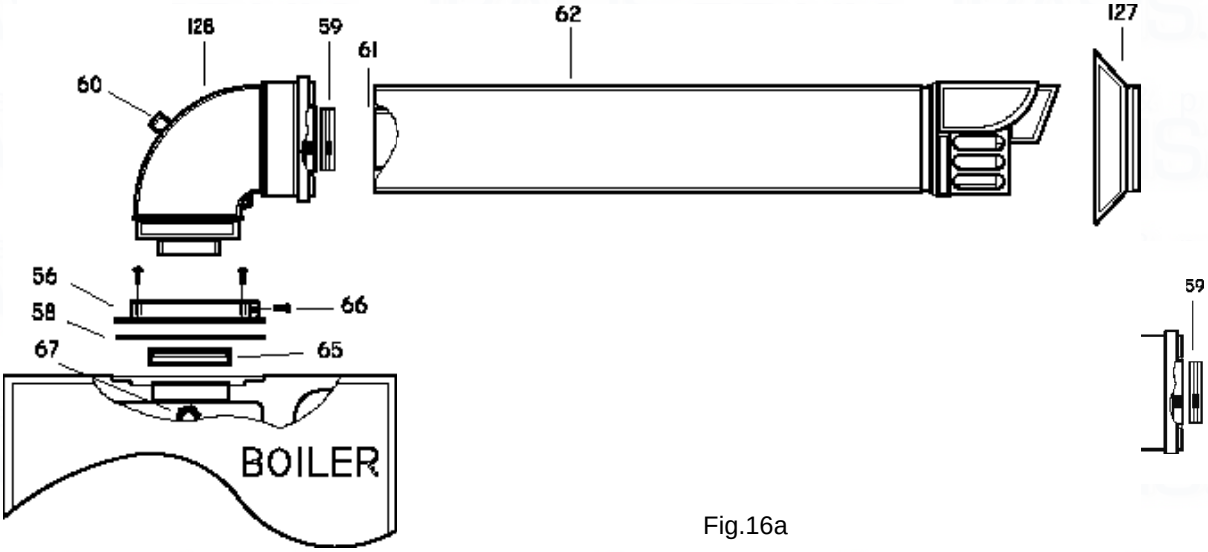

Fig.16a

KEY

56 - Flue adapter
58 - Header gasket
59 - Rubber seal Ø 60
60 - Sample point
61 - STD flue exhaust duct
62 - Terminal
63 - Flue extension
64 - Flue exhaust duct extension
65 - Flue manifold rubber seal
66 - Securing screw
67 - Flue temperature sensor
127 - Terminal Rubber wall seal
128 - Elbow header

5.7 INSTALLING THE APPLIANCE FOR SIDE FLUE OUTLET (Fig. 29)

5.7.1 - Attach the template to the wall with adhesive tape, making sure that the centre line is vertical and that the distance from the centre line to the nearest side wall is not less than measurement in Fig.17.

- Mark the two fixing bracket securing holes on the wall and extend the axis of the flue duct hole to the side wall ensuring it is horizontal.

-**Make sure flue slopes 2.5° down towards the boiler that is 45 mm/m fall per metre of the flue length.**

- Trace the centre of the flue duct hole measure distance . From the corner of the wall (Fig. 17), measure the distance (127mm) between the centre of flue duct hole to the corner.

Detach the template from wall.

- Use a dia. 10 mm. drill to make the 2 holes for securing hanging Bracket fixing . Insert the plastic expansion plugs. Core drill a 105 mm dia. hole in the side wall for inserting the flue duct.

5.7.2 Positioning the elbow towards the required direction .

5.7.3 Make sure that rubber seal Ø 60 is locate into the elbow .

5.7.4 If using horizontal flue duct and it is too long it can be shortened.
Should it be necessary to cut the flue always.Cut equal amounts from both inner and outer pipes.
Note : add 30mm to overall flue length to allow for cover plate.(Fig.10 item127). .

- Remove the centering spring, pull the flue terminal disengage inner flue duct.
- Measure the thickness W of the wall.
- Cut the outer air duct (100 mm. dia.) at right angles and to a length equal to W+Y - 47 mm. (Fig. 15).
- Cut the inner flue duct (60 mm dia.) at right angles and to a length equal to W+Y + 65 mm.
- Outer air duct and inner flue duct must be de-burred.
- Reassemble the two tubes.

5.7.5 Insert the flue assembly into the wall, making sure it will not interfere when fixing the boiler on the wall.

5.7.6 Lift the boiler on the wall. Locate onto the wall fixing bracket.

5.7.7 Working above the boiler pull the flue duct towards the elbow in order to engage tube into its header (Fig.10). Position flue into straight header and push so as to locate inner and outer flue correctly. Ensuring good seal is made with o.rings.

5.7.8 **IMPORTANT:** Terminal rubber must be fitted (Fig. 10).

5.7.9 Extension kits are available see table 6.

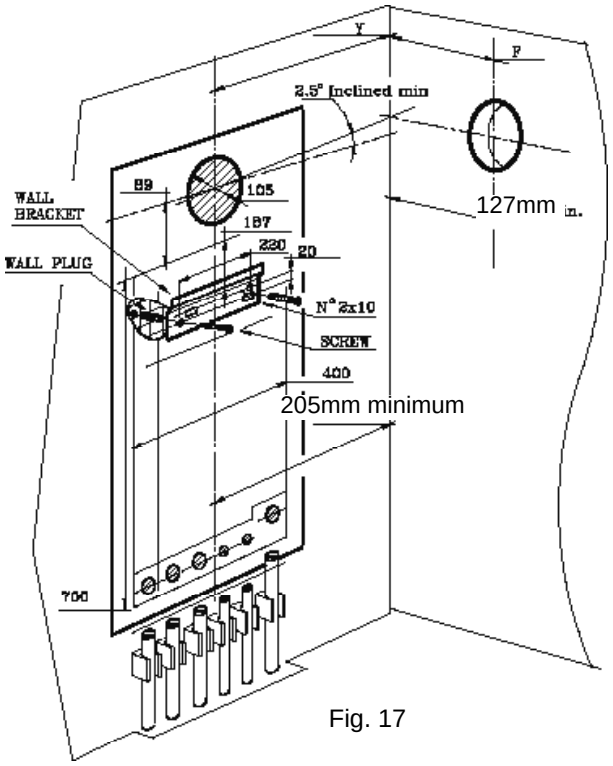

Fig. 17

IN LINE FLUE BEND AND FLUE EXTENSION

Fig.18

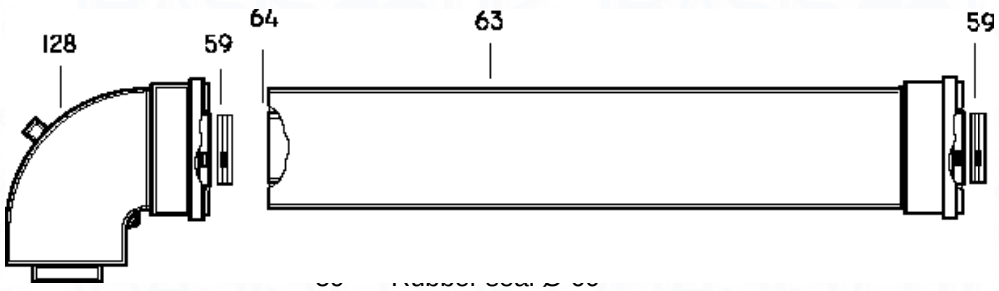

IMPORTANT :Please, lubricate the internal part of the seals before being fitted.

63 - Air intake duct extension
64 - Flue exhaust duct extension

5.7.10 VERTICAL FLUE INSTRUCTION ONLY (Fig.19-20-21)

IN LINE FLUE BEND - 1000 mm MUST BE DEDUCTED FROM OVERALL LENGTH FOR EACH 90° BEND
OBTUSE FLUE BEND -500 mm MUST BE DEDUCTED FROM OVERALL LENGTH FOR EACH 135° BEND.

The vertical flue kit is intended for use where a horizontal flue outlet is not possible or desired.
The vertical flue can be used either with a flat roof or a pitched roof (maximum pitch 60°).
Where a straight vertical flue is not possible or desired, an offset vertical flue can be used in conjunction with a side horizontal flue extension piece and an inline 135°/90° flue bend (Fig. 19).

IMPORTANT NOTES : For greater flue length see twin flue or concentric 80/125 flue instructions

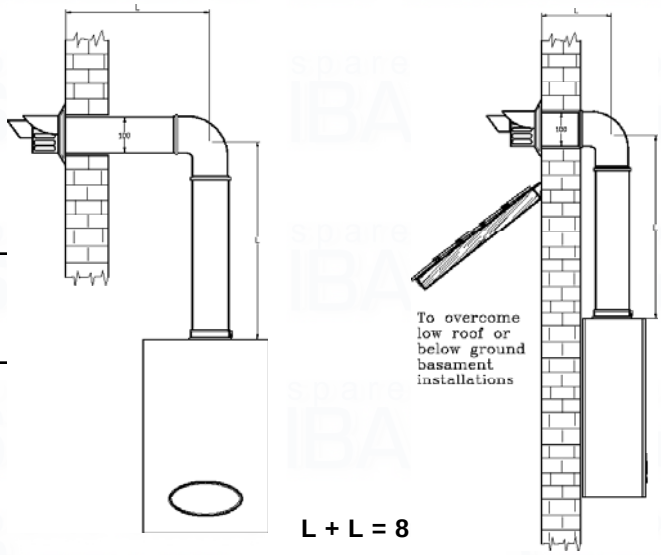

L + L = 8

Proceed with installation as detailed in section 5 up to 5.5.8., of the main Installation and Servicing Instruction, ignoring all references to horizontal flue installations.
Use adhesive tape to attach the template to the wall, making sure that the centre line is vertical and that the flue centre line is virtually below the point at which the flue will exit the roof.

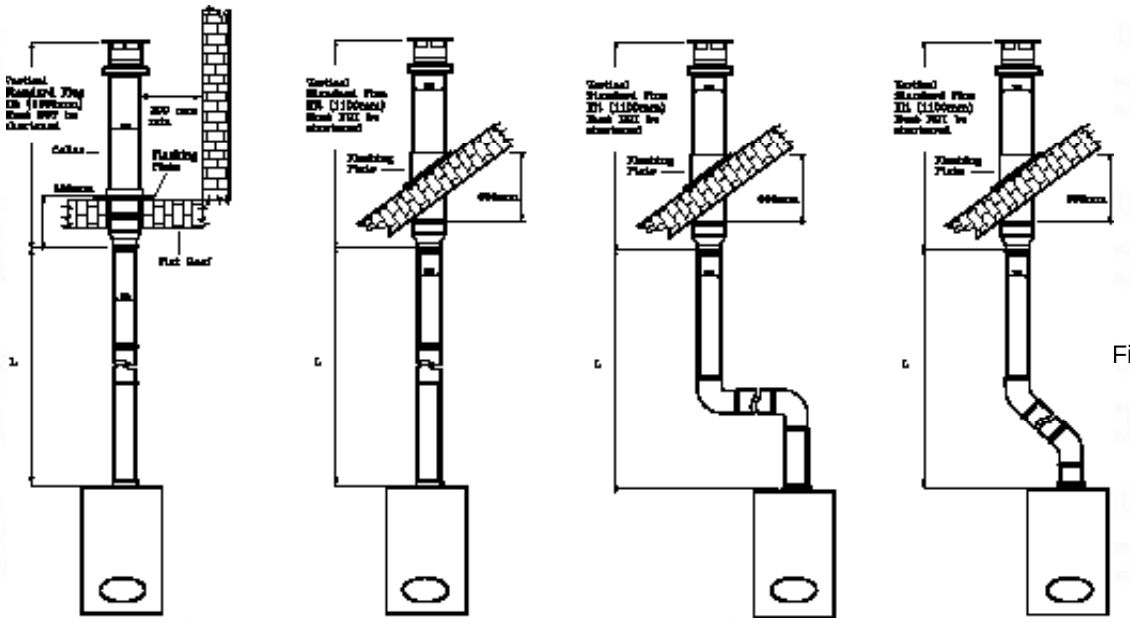

Fig. 21

Straight Flue	Straight Flue	Offset Flue	Offset Flue
L = 12.0 m Max	L = 12.0 m Max	L = 2.0 m Max	L = 2.0 m Max
plus Terminal	plus Terminal	(10 Bend 90° Max)	(20 Bend 45° Max)
		plus Terminal	plus Terminal

- Ensure that the maximum permissible flue length is not exceeded (Fig. 21).
- Mark the two wall fixing bracket securing holes on the wall.
- Detach the template from the wall.
- Use a 10 mm dia. drill to make the 2 holes securing fixing hanging bracket.
  Insert plastic expansion plugs (Fig. 17).

- Screw in the two coach bolts.
- Position the flue extension and fix the securing screw on the flue adaptor appliance (Fig. 23) item 66, and ensure that the gasket is correctly fitted.

Important: Make sure that the flue extension dia 60 mm duct is inserted fully into the flue manifold, and the flue manifold rubber seal is correctly fitted.

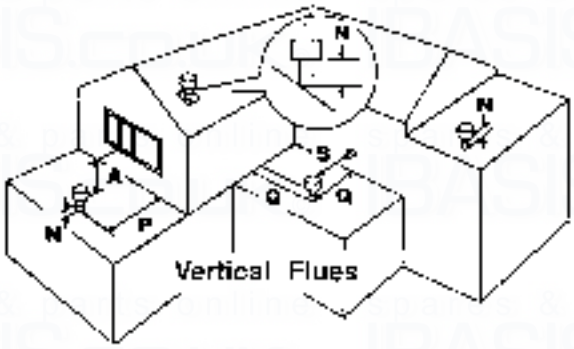

Fig. 22

POSITION	MIN. DISTANCE mm
N above roof level (to base of terminal)	300
P from adjacent wall to flue	300
Q from internal corner to flue	300
S from terminal	600
M horizontally from a vertical terminal to a wall	300
N from an adjacent opening window	1000

Before proceeding with installation check the contents of the RAVENHEAT VERTICAL FLUE KIT, comprising of the following pieces:

- 1 RAVENHEAT VERTICAL FLUE complete with terminal assembly (for vertical flue application).
- Additional 1000 mm (approx) Flue Extension pieces as necessary.

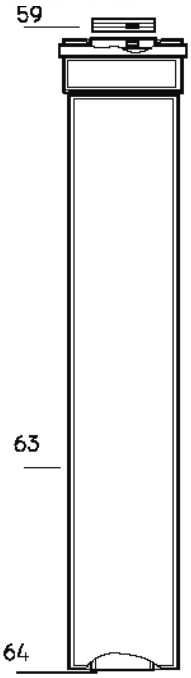

Fig.23

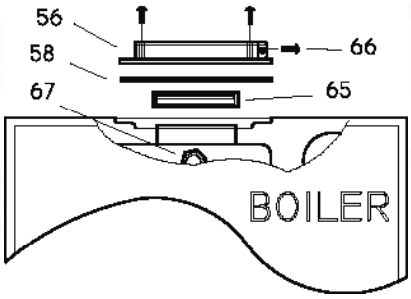

Fig.24

IMPORTANT :Please, lubricate the internal part of the seals before the assembling.

Cut a 105 mm diameter hole through the ceiling and/or roof, at the point previously marked.
Fit a roof flashing sleeve (Fig. 23) to the roof, available from Ravenheat Manufacturing.
Insert the Vertical Flue terminal assembly through the flashing plate from the outside.
Fix the appliance to the wall, locating onto the Wall fixing bracket.
Measure the vertical distance between the top of the flue (Fig. 22) and the bottom of the flue terminal assembly (Fig. 19). The measurements should be taken from the outer diameter of the flue.
NOTE: Where this length does not match any standard combination of the extensions, extension can be cut to the required length (Fig. 24).
When cutting both inner and outer ducts of the extension, always cut on spigot side, and they must be de-burred.

Starting at the appliance end, assemble the extension duct sections, making each inner and outer (flue) joint by inserting the spigot end into the socket end of the next tube, making sure the seal rings are correctly located (Fig. 24). Make sure that the entire flue is adequately supported. Use at least one bracket for each extension used.
Ensure that all inner flue connections have a good fit/seal, and that the space clips in each extension are correctly positioned.

- Position the flue extension and fix the securing screw on the flue adaptor on the appliance (Fig. 23 item 66), and ensure that the gasket is correctly fitted.

Important: Make sure that the flue extension dia 60 mm duct is inserted fully into the flue manifold, and the flue manifold rubber seal is correctly fitted.

5.8 REASSEMBLE BOILER AS PER (sect. 5.6.1)

5.8.1 Fitting valve pack

Remove plastic caps from boiler connection and fit valves as per Fig. 25 using washers provided.

5.9 GAS CONNECTION (Fig. 25)

5.9.1 A minimum working gas pressure of 20 mbar (8 in w.g.) must be available at the boiler inlet at full flow rate (37 mbar for propane, 29 mbar for butane).

5.9.2 Fit gas service cock to the boiler via the union nut and connect gas pipe. Do not overtighten and use another spanner as a counter force to avoid straining internal connections.
Important consult (sect 4.5.1).

5.10 CENTRAL HEATING CONNECTION (Fig. 25)

5.10.1 Before any central heating connections are made to the boiler all system valves should be opened and the system thoroughly flushed out with cold water.
- Connect the central heating return pipe to the isolating cock.
- Connect the central heating flow pipe to the isolating cock marked CHF.
- Pipe dimensions and positions are marked on template supplied and fig. 26.

5.11 DOMESTIC HOT WATER (Fig. 25)

5.11.1 The domestic hot water circuit does not need a safety valve but it is essential to ensure that the pressure of the cold water supply does not exceed 10 bar. If in doubt it is advisable to install a pressure reducing valve The minimum pressure needed to operate the domestic hot water system is 0.5 bar with a flow of approx 3 Lts per min. Flush out all foreign matter from the supply pipe before connecting to the appliance.
- Connect the 15 mm. cold water pipe to the stop cock to the appliance inlet.
- Connect the 15 mm. hot water pipe to the cock to the appliance inlet.

5.12 SAFETY VALVE DISCHARGE

5.12.1 The safety valve is located near the pump. It has a 15 mm copper to permit a discharge pipe to be connected.
When connecting ensure the discharge pipe does not restrict access. The discharge should terminate facing downward exterior to the building in a position where discharging (possibly boiling water & steam) will not create danger or nuisance, in easily visible position, and not to cause damage to electrical components or wiring.
The discharge must not be over an entrance or a window or any other type of access.

5.13 ELECTRICAL CONNECTIONS

5.13.1 **IMPORTANT:** Electricity supply must be as specified in clause (sect. 4.10).
- When controls external to the appliance are required, design of the external electrical circuits should be undertaken by a competent person. In accordance with the IEE wiring regulations.
  It is essential that all external controls MUST VOLT FREE.
  Factory fitted internal wiring must not be disturbed when wiring external controls.
- To gain access to the electrical box remove the front panel of the case as described in clauses sect. 8 (Fig.33), remove the two securing screws on the supporting bracket and lower down , unclip the four plastic tabs and lift off the electrical box cover (Fig.46).
- The terminals are easily visible on the front of the electronic control board (Fig. 48).
- Heat resistant flexible cable is fitted between the isolator and the terminal block A 3 core cable of 0.75 mm^2 (24x0,2 mm) to BS 6500.
  Make sure all wires to the appliance are routed away from sharp edges and hot surfaces.
  The cable must be fastened with its cord anchorage and connected so that should the cable slip from the anchorage the current carrying conductors become taut before the earthing conductor. Securely tighten all terminal screws and arrange the cable with slack between the cord anchorage and the terminal block.
  WARNING: If the supply cord is damaged, it must be replaced by a service engineer (supply cord available from Ravenheat Manufacturing Ltd).

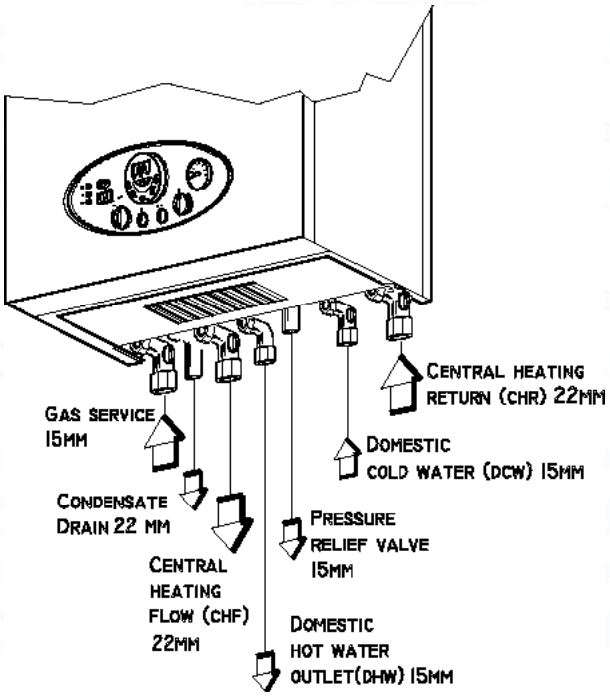

5.14 PROGRAMMABLE TIMECLOCK

Instructions for use consult User's Guide.

5.15 CONDENSATE DRAIN CONNECTION

5.15.1 The condensate drain connection is between Gas service cock and Central Heating Flow valve connections (Fig.26). An 25mm plastic overflow pipe is fitted on the condensing trap and must should be used to fit on the drain connection, if required, to discharge condensate to a drain. The drain pipe should have a fall of a least 2.5° away from the boiler. Condensate should, if possible be discharged into the household internal drainage system.

If this is not practicable, discharge can be allowed into the external household drains or a purpose designed soak away.

It is recommended that any external condensate drain pipe is insulated and also preferably of 32 mm diameter, to prevent freelzing in adverse weather conditions.

The condensate is discharged periodically in " slugs" by siphonic action. It is not necessary to provide air breaks or extra traps in discharge pipe as there is already a 125mm high trap inside the boiler.

Fitting an extra trap may cause the boiler siphon to work incorrectly.

Refer to BS5546 or BS6798 for advice on disposal of boiler condensate.

POSITION OF WATER AND GAS CONNECTIONS

Fig. 26

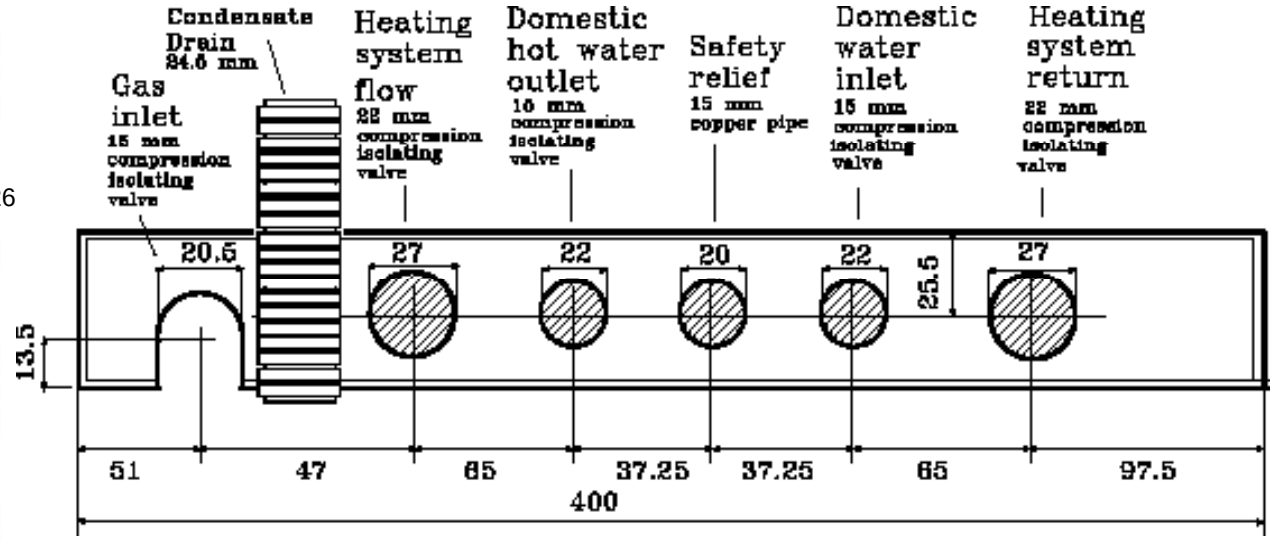

INSTRUMENT PANEL

Fig. 27

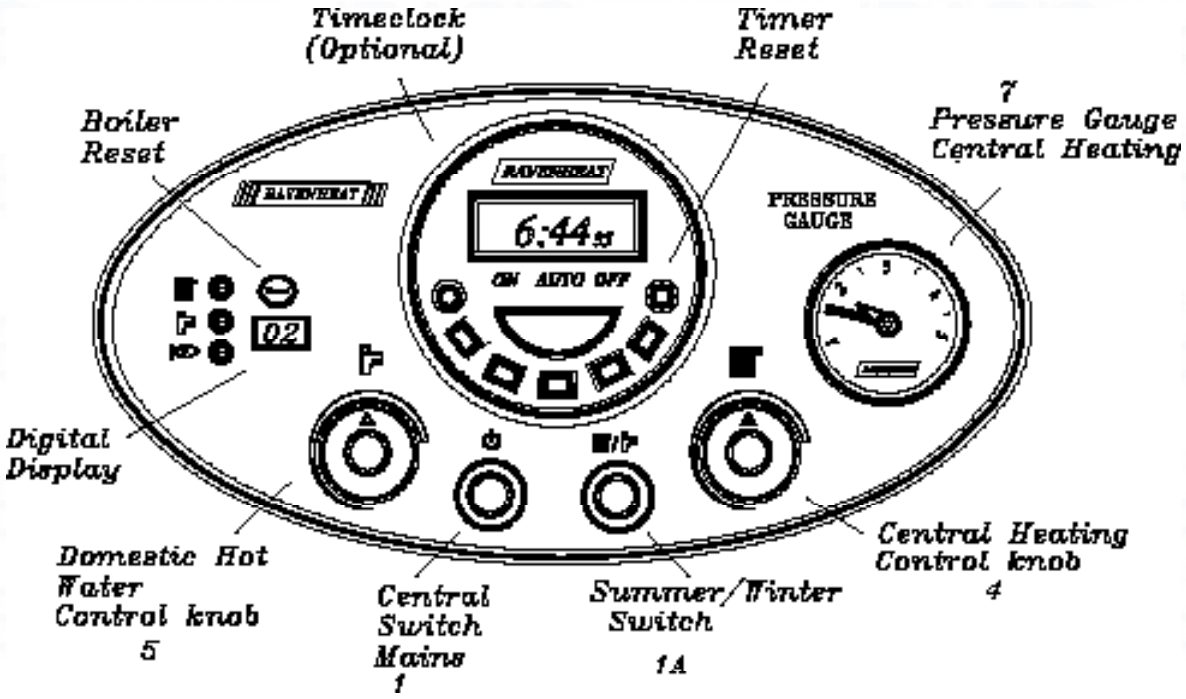

SECTION 6 COMMISSIONING

6.1 Each boiler has been through a rigorous operational procedure at our factory and should not require any further adjustment If in the unlikely event of the appliance not operating correctly, please turn to the Fault Finding and Logic Sequence charts.

6.2 GAS SUPPLY INSTALLATION

6.2.1 Inspect the entire installation including the gas meter, test for soundness and purge, all as described in BS 6891.

6.3 ELECTRICAL INSTALLATION

Preliminary electrical systems checks to ensure electrical safety shall be carried out by a competent person (earth continuity, polarity, resistance to earth). Those checks are outlined in the «Instructions for British Gas Multimeter» Booklet. If a fault has occurred on the appliance the fault finding procedure should be followed as specified under the servicing section of this document.

6.4 INITIAL FILLING OF THE SYSTEM

Open central heating flow and return valves Unscrew the cap on automatic air release valve positioned on the top of the pump housing one full turn (leave open permanently).

- Close all air release taps on the central heating system.
- Gradually open stopcock at the filling point connection to the central heating system until water is heard to flow.
- Starting with the lowest radiator open each air release tap in turn. Close it only when clear water, free of bubbles, flows out. In the same way release air from any high points in the pipework.
- Continue filling the system until 1.5 bar register on gauge. Then turn off the filling points stopcock.
- Inspect the system for water soundness and remedy any leaks discovered

6.5 SETTING THE SYSTEM DESIGN PRESSURE

The design pressure must be a min. 1 bar and max. 1.5 bar. These figures are read off the pressure gauge.

- The actual reading should ideally be 1 bar + the height in metres to the highest point of the system above the base of the appliance (up to max of 1,5 bar).
  N.B.: They safety valve is seat to lift a 3 bars (30 mt/42.5 psing).
- To lower the system pressure to the required value remove drain point (Fig. 29) or drain on the heating circuit.

6.6 FILLING THE HOT WATER SYSTEM

Close all hot water draw-off taps.
Open the cold water inlet cock.
Slowly open each draw-off tap until clear water is discharged.

6.7 LIGHTING THE BOILER

Before lighting the boiler make sure that the heating circuit flow and return valves are open and also that the cold water input cock is open.

- If external controls are installed (e.g timeclock and thermostat) make sure that they call for heat.
- Push Summer/Winter switch (1A) Fig.27 to Winter .

IMPORTANT: Before switching on the boiler POWER SWITCH FOR THE FIRST TIME when commissioning, turn the heating control knob (Fig.27) DOWN TO ITS MINIMUM setting leaving it at minimum for approx 5 mins to purge air saffely from the boiler heat exchanger.

GAS VALVE

Fig. 28

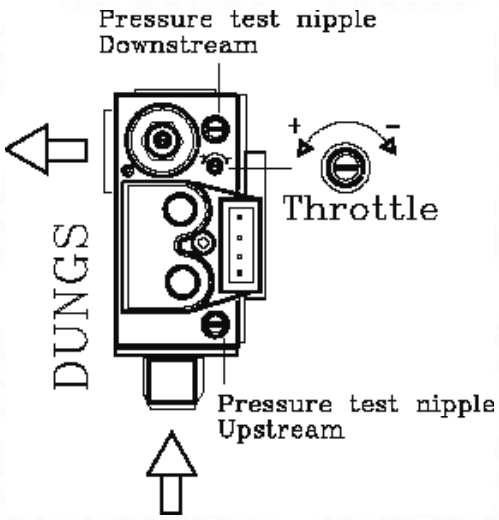

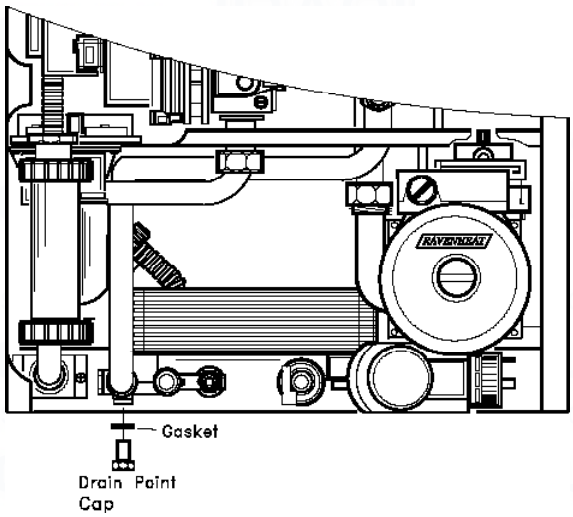

-Turn control knob 4 (Fig.27) down to its **minimum** setting.
-Push the power main switch to on (Fig.27)
-The digital display will show water set point temperature in central heating .
-The fan start and after a few second the digital led display will show that the ignition commence.
-NOTES : It maybe necessary to reset the Digital Timer on boiler (if fitted) to start. Put the timer to on position (Fig.27)
-The ignition control will automatically have three attempts , but initially this may be due to air in the gas supply line.If the burner fails to light, the digital led display and fan will stop, and the display will show the lockout code.
-If necessary push the boiler Reset button (Fig.27) and the boiler will restart automatically.
-After the boiler has light , allow to warm at minimum temperature setting to purge any air from the system.
-Once the system has been purged of air turn the control knob (Fig.27 item 4) to the desired position.
With leak detection fluid test for gas soundness of all gas components and joints.See paragraph 6.14 for regulating the heating circuit control knob.

6.8 CHECK THE GAS PRESSURE

Check the gas mains pressure at at the gas valve test nipple UPSTREAM (Fig.28) with boiler operating Check with the Local Gas supplier if the pressure differ significabntly from 20 mbar G20 (natural gas), 37 mbar G31 (propane) and 29 mbar G30 (butane)

IMPORTANT :The Gas Valve Throttle adjuster is required to be sealed with tamper proof paint after adiustment.

6.9 COMBUSTION CHECK : If a gas carrying components has been replaced, the combustion of the appliance should be checked as follows.
Remove the front panel of the case.
Ensure the boiler and external controls are calling for heat. Turn on electrical supply.
Open the Hot water tap at maximum flow rate.
Wait at least five minutes or until the unit has reached its operating temperature.
Unscrew the test sample screw on the boiler elbow band (Fig.10). Measured the level of CO_2. Check the reading against the corresponding value in sect.3 TECHNICAL DATA If adjustment proves necessary then proceed as follows.

IMPORTANT : Any adjustement to the gas valve should only be carried out by a qualified person

Refer to table 6.10 adjust the maximum level of CO_2 by turning the Throttle on the gas valve (Fig.28).
Anti-clockwise to increase CO_2
Clockwise to decrease CO_2
After any new regulation wait to stabilise about one minute.
- Replace the sample point screw on the flue manifold (Fig.1 item 8)
- Replace the front panel of the case.

RATIO BETWEEN FAN SPEED AND HEAT INPUT
Fig. 30

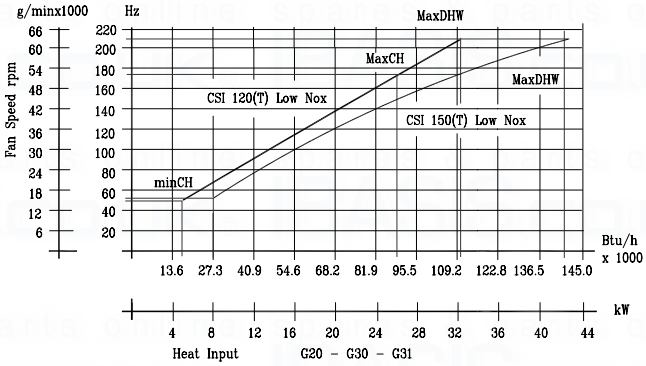

ELECTRODES POSITION Fig. 31

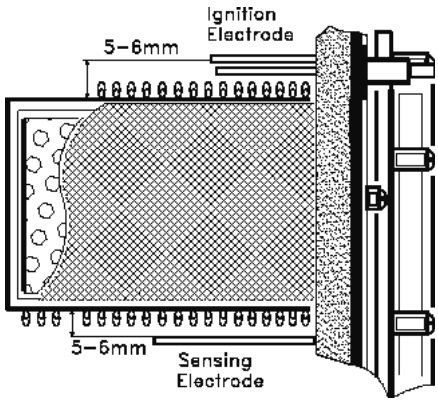

benchmark

The code of practice for the installation, commissioning & servicing of central heating systems

Once the process of commissioning the boiler is complete, the commissioning engineer MUST complete his section in the Benchmark log book.

6.10 CHECKING THE FLUE SYSTEM

6.10.1 The flue system should be visually checked for soundness Check all connections and fixings are secure and tight

6.11 CHECKING THE HEATING THERMISTOR

6.11.1 Allow the system to warm up and then turn the C.H thermistor to ensure the main burner modulates from “high” to “low” and “low” to “off” and vice versa (scale range covers approx. 45° C / 85° C).

6.12 TESTING AND REGULATING THE DOMESTIC HOT WATER SYSTEM FLOW

6.12.1 Put the appliance in summer position with the (summer/winter) switch (Fig.27).

- Open a domestic hot water tap (preferably the bath tap). Ensure cold water inlet stopcock is open and the D.H.W. control knob (Fig.27) is set at maximum.
- Digital display show water temperature in demand (led on)
- If the boiler does not light check that the water flow rate is above the min. required to operate the differential pressure 2 8 Lts./ min. (0.61 gals/min).
- The temperature of the water will depend on the rate at which it flows. If, due to high water pressure, the flow rate is too high (and thus the temperature too low for practical use) the flow rate may be adjusted. It is better to set for the lowest acceptable temperature, preferably at the bath tap since the user can gain higher temperatures at other restricted flow taps (Table ...)
  -If the cold supply is subject to large fluctuations or is above the permitted max. water pressure, a suitable pressure/flow regulator should be fitted in the cold water supply to the appliance.
- Slowly close the draw off tap to reduce the flow rate to above the min (approx. 2.8 litre/min)
- 0.61 gals/min.). Rotate the D.H.W. control knob to ensure it operates at its various setting.
- Close the draw-off tap still further. The burner should stop when the rate falls below about 2.8 litres/min (0.61 gals/min).

Range Rating regulation of Central Heating				
C.H. Regulations	Heat Input kW		Fan speed Hz	
	CSI150	CSI120	CSI150	CSI120
Maximum Setting	**32.0**	**26.0**	**180**	**175**
minimum Setting	**8.0**	**5.78**	**52**	**47**

6.13 HANDING OVER TO THE USER

6.13.1 After completion of installation and commissioning of the system, the installer should hand over to the Householder by taking the following actions:

- Hand the “User’s Instructions” to the Householder and explain His/Her responsibilities under the “Gas Safety Regulations 2000”.
- Explain and demonstrate the lighting and shutting down procedures.
- The operation of the boiler including the use and adjustment of ALL system controls which should be fully explained to the Householder. This then ensures the greatest possible fuel economy consistent with household requirements of both heating and hot water consumptions.
  Advise the User of the precautions necessary to prevent damage to the system, and to the building, in the event of the system remaining inoperative during frost conditions
- Explain the function and the use of the boiler switch Summer/Winter and ON/OFF switch,reset and digit display .
- Explain and demonstrate the function of temperature controls, neon lights radiator valves etc for the economic use of the system.
- If an optional time clock is fitted, then draw attention to the time clock User’s Instructions and hand them to the Householder
- Stress importance of regular servicing by a qualified Heating Engineer and that a comprehensive service should be carried out AT LEAST ONCE A YEAR
- Fill in the Benchmark log book and leave completed with the customer.

SECTION 7 SERVICING INSTRUCTIONS

Ravenheat are a member of the Benchmark initiative and fully supports the aims of the programme. Benchmark has instructed to improve the standards of installation and commissioning of central heating systems in the UK and to encourage in the regular servicing of all central heating systems to ensure safety and efficiency.

benchmark

The code of practice for the installation, commissioning & servicing of central heating systems

7.1 SERVICING

7.1.1 To ensure continued efficient operation of the appliance it is necessary to carry out servicing and cleaning at regular intervals.
The frequency of cleaning will depend upon the particular installation conditions and usage but in general, once year should be adequate.

WARNING
Before the start of any servicing or replacement of components always isolate electricity supply to the appliance and always turn off the appliance gas supply at the gas service cock.

Data badge position-lower left hand front panel.

- The following notes apply to the appliance and its controls but it should be remembered that attention must also be paid to the heating and hot water circuits with special attention to radiator valves, thermostats, clocks, leaking hot water taps etc.
- Where it is necessary to replace a gasket that relies on adhesive for securing - this adhesive will be supplied with the gasket as a spare item.
- In all cases prior to servicing, remove the front panel of the case.Operate the appliance by turning the hot water services on to a high water flow, measurement of the products of combustion can be achieved by connection of a probe to the combustion analyser test point.
- **IMPORTANT:** After completing any servicing or replacement of gas carrying components it is essential that a test for gas soundness is always carried out along with functional checks in operation

7.2 TO INSPECT AND CLEAN THE APPLIANCE

7.2.1 Before carrying out cleaning operation, cover the electrical control panel with a piece of waterproof material to protect it from debris.

7.2.2 Drop down the control panel into the service position
Unscrew the gas valve from gas pipe inlet. Disconnect the gas valve electrical plug at the gas valve.
Disconnect the electrical plug leads from the fan.
Disconnect the electrode leads from the electrodes
Remove the five combustion chamber retaining nuts and gently remove the fan,gas control valve, electrodes and burner assembly from the combustion chamber.(Fig.32)

Fig.32

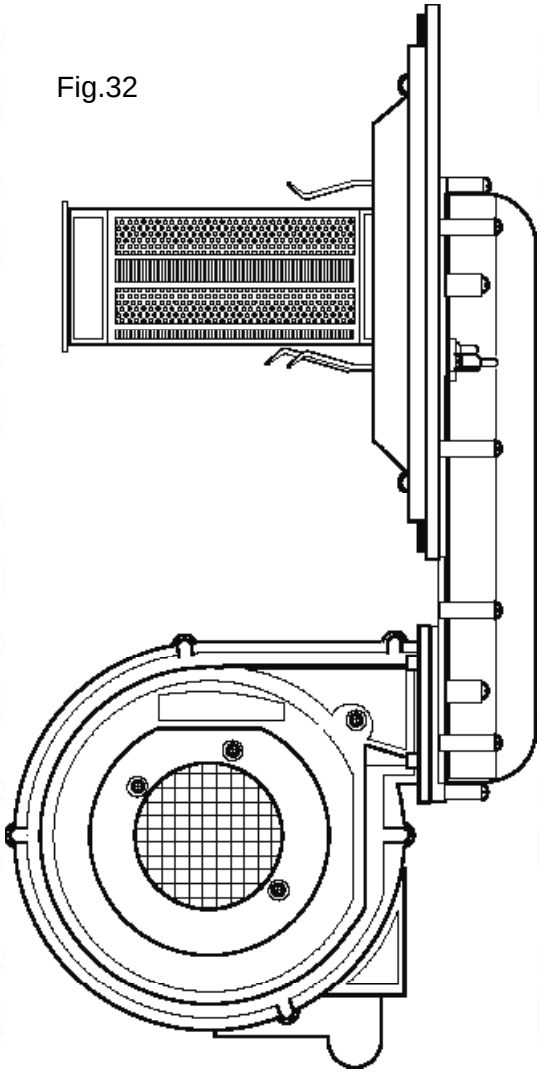

7.2.3 Inspect the heat exchanger for any blockage. Deposits of any material should be brushed away using a soft brush.
NOTE: Do not use brushes with metallic bristles

7.2.4 Examine internal pipe-work connections and automatic air vent for any water leaks Rectify if necessary

7.2.5 Examine and remove loose debris from combustion chamber using a soft brush and vacuum cleaner. Carefully flush by spraying water any remaining debris through the condensate trap.(Ensure the water is kept away from electrical components)

7.2.6 Inspect the siphonic condensate trap for a blockage.
Remove the cap at the base of the condensate trap.
Remove any solid found.
Remove the float to clean it.
Any deposits should be flushed out.
Reassemble and refit the condensing trap.
When refitting the cap ensure that a watertight seal is achieved, but do not use excessive force.

7.2.7 Examine the spark and sensing electrodes for any mechanical damage, Clean away any debris and check the spark and sensing gap. See Fig.31.

7.2.8 Examine flue duct and flue manifold and ensure that there is no obstruction. Examine the gasket at the entry into the flue manifold.

7.2.9 It is essential that a good seal is made at the outlet to the flue manifold, renew this gasket if there is any sign of damage or deterioration.

7.3 CONVERTING THE APPLIANCE TO DIFFERENT GAS TYPES

7.3.1 Boilers are factory set to work for use with Natural gas or LPG gas.This is clearly marked on the packing and boiler data badge.

To convert a boiler from one gas to another this operation must be carried out by a qualified competent person, with all necessary equipment.

It will also be necessary to obtain a data badge conversion kit directly from Ravenheat Manufacturing Ltd.

1- Remove the case
2 - Check gas mains pressure at the gas valve test nipple upstream (Fig.28) with boiler operating.Sect.6.8
3 - Adjust Fan Speed as Sect.3 (technical data).
4 - Measure the level of CO_2 as Sect.6.9 and adjust to correct data settings information.
5 - Affix new data badge.
6 - Replace in reverse order.

SECTION 8 REPLACEMENT OF PARTS

8.1 GENERAL

8.1.1 Replacement of parts must be carried out by a competent person.

8.1.2 Before replacing any parts the boiler should be isolated from the mains electric supply and the gas should be turned off at the service cock on the boiler.

8.1.3 After replacing any parts always test for gas soundness and if necessary carry out functional test of the controls.

8.1.4 For replacement of parts, the front,side and bottom panel panels of the boiler will need to be removed.
To remove the front panel unscrew the two screws upper and the two screws lower that securing the front panel to the boiler and lift off **.**

To remove the bottom panel unscrew the four screws and lift off.
To remove the side panels , remove the front and bottom panels, unscrews the screw below and lift off. Fig.33) .

8.2 TO REMOVE/REPLACE IGNITION CONTROL BOARD

8.2.1 Remove the front casing panel (sect. 8.1.4).

8.2.2 Detach all the connectors from the ingition control board.

8.2.3 Remove the 2 screws that secure the Ignition control board to the depression chamber, and remove.

8.2.4 Replace in reverse order

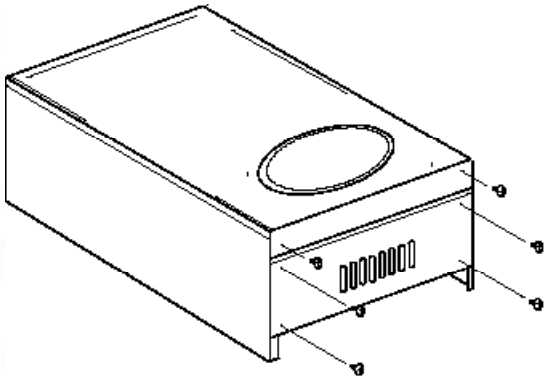

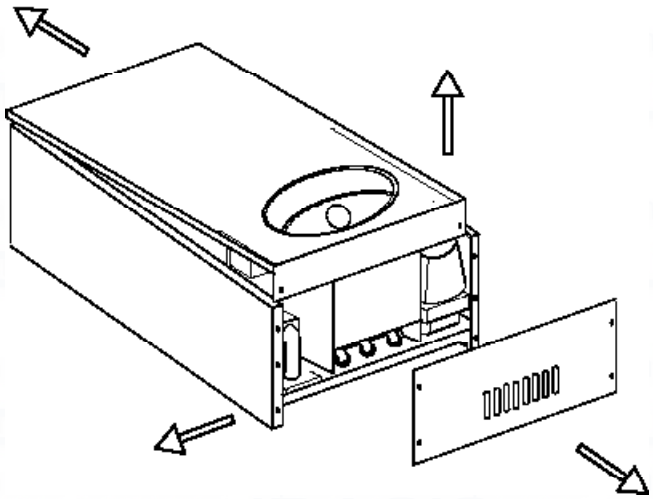

8.3 TO REMOVE/ REPLACE THE ELECTRODES (Fig.34)

8.3.1 Remove the front casing panel (sect. 8.1.4).

8.3.2 Remove the ignition and/or sensing lead plug .

8.3.3 Unscrew the two securing screws and put them into a container so that they don't get lost.
Withdraw the Spark electrode and /or Sensing electrode carefully from the combustion chamber cover being careful not to damage the seal.

8.3.4 Replace with new electrode in reverse order. Ensure gap is correct and there is a good seal when replaced.

Fig.34

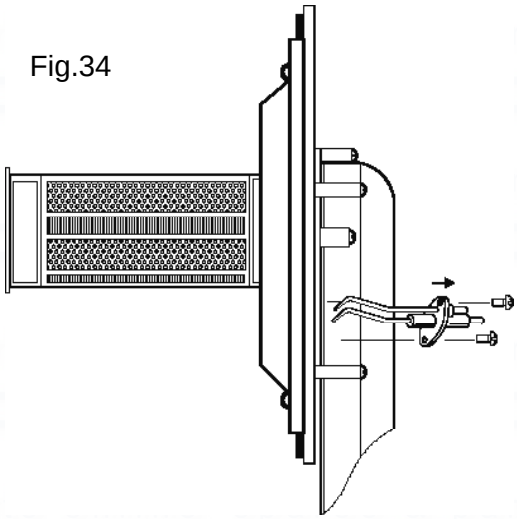

8.4 TO REMOVE/REPLACE THE FAN (Fig. 35-36)

8.4.1 Remove front and left hand side the case (sect. 8.1.4).

8.4.2 Unplug plastic plug from the DC fa

8.4.3 Unscrews the four screws that se to the gas manifold, check the g replace if necessary.

8.4.4 Reassemble in reverse order. Ens are connected correctly

Fig.35

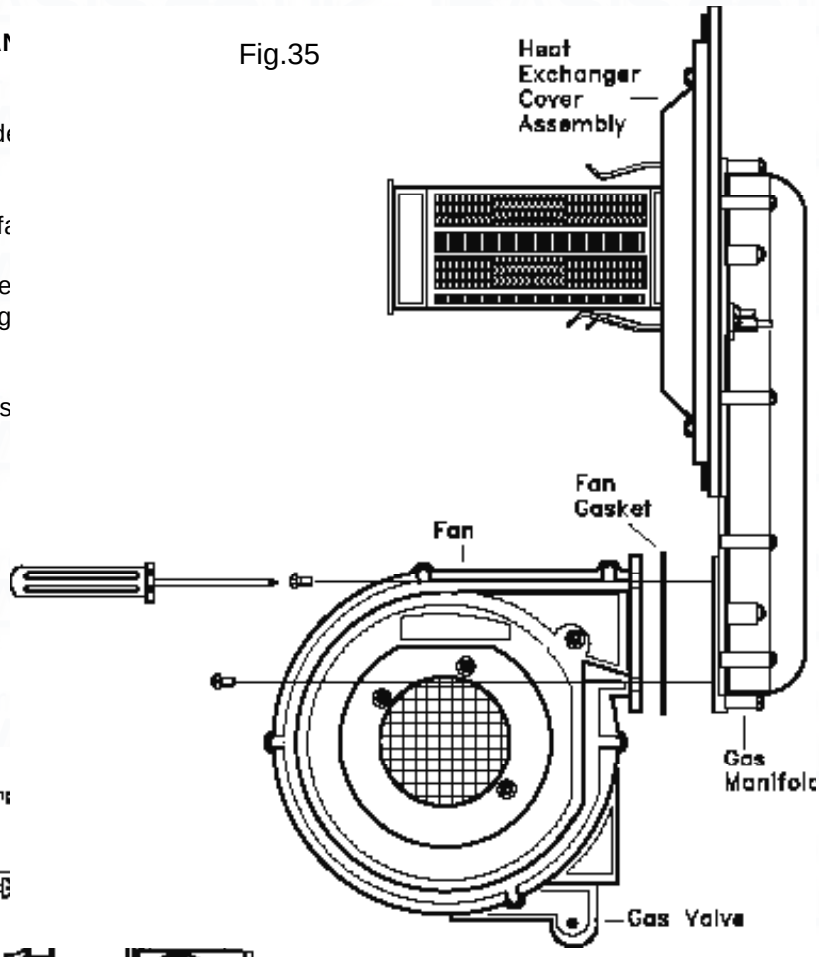

Fig.36

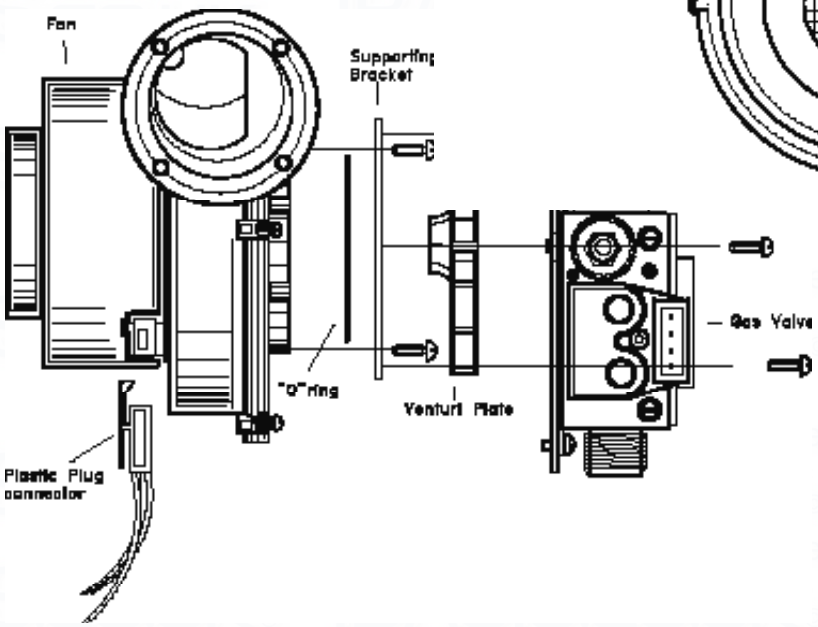

8.5 TO REMOVE/REPLACE THE BURNER (FIG.37)

8.5.1 Remove front casing (sect. 8.1.4).

8.5.2 Unscrew and Gently Remove combustion chamber cover assembly with gas valve, fan ,burner and electrodes from combustion chamber.as in sect. 7.2.2

8.5.3 Remove the four screws that secure the gas manifold and carefully pull out the burner.
IMPORTANT: THE BURNER WILL REQUIRE A NEW GASKET WHEN REFITTED.

8.5.4 Replace in reverse order

Fig.37

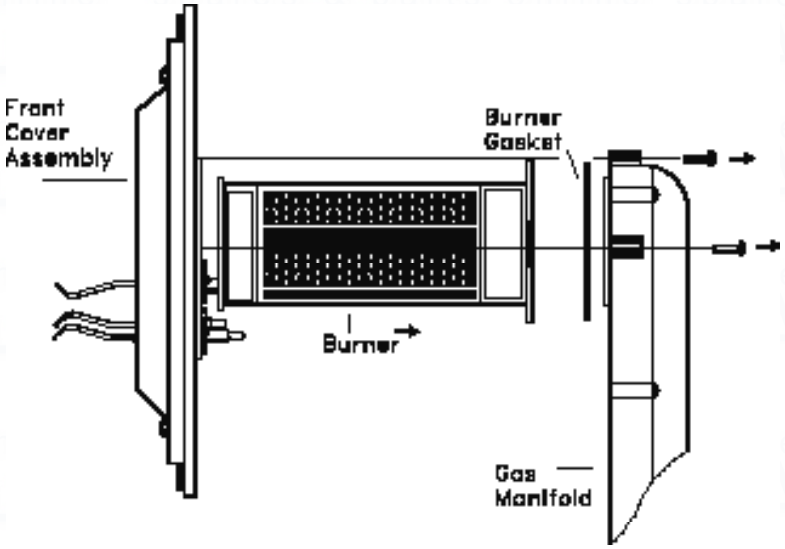

8.6 TO REMOVE/REPLACE THE HEAT EXCHANGER

8.6.1 Remove front casing (sect 8.1.4).

8.6.2 Unscrew and Gently Remove combustion chamber cover assembly with gas valve, fan ,burner and electrodes from combustion chamber as in sect. 7.2.2.

8.6.3 Drain the boiler CH circuit and drain the DHW circuit .

8.6.4 Remove the clip securing the condense pipe out of the bottom of the heat exchanger and pull for to remove the pipe

8.6.5 Remove the clips securing the flow and return pipes at the heat exchanger.

8.6.6 Unscrews the two nuts that fix the pipes at diverter valve and pump and move away from the heat exchanger.

8.6.7 Loosen the three heat exchanger securing screws and clamps remove the heat exchanger.
CAUTION : There will be water in the heat exchanger

8.6.8 Carefully ease heat exchanger out.
Replace in reverse order, always use a new oring seals.

8.7 TO REMOVE/REPLACE THE IGNITION CONTROL BOX .

8.7.1 Remove front casing (sect 8.1.4).

8.7.2 Remove ignition and sensing leads and electrical connections.

8.7.3 Remove the two fixing screws that fasten the ignition control box at the depression chamber.

8.7.4 Replace in reverse order.
Ensure correct wire position.

8.8 **TO REMOVE/REPLACE GAS CONTROL VALVE AND OR VENTURI PLATE . (Fig.38).**

8.8.1 Remove front casing (sect 8.1.4).

8.8.2 Drop down the control panel into the service position.

8.8.3 Unplug plastic plug from the DC fan supply and **u**nscrew the gas valve from gas pipe inlet

8.8.4 Remove the electrical plug from the gas control valve.
Check the position of the gas valve on the fan

8.8.5 Unscrew and gently remove combustion chamber cover assembly with gas valve, fan ,burner and electrodes from combustion chamber.as in sect. 7.2.2

8.8.6 Remove the three screws, which fix the gas valve and venturi plate at the fan

8.8.7 Remove the gas valve

8.8.8 Replace in reverse order.

8.8.9 **IMPORTANT :** When gas control valve will be re -fitting,
check combustion CO_2 and adjusted if necessary
see section 6.10

Fig.38

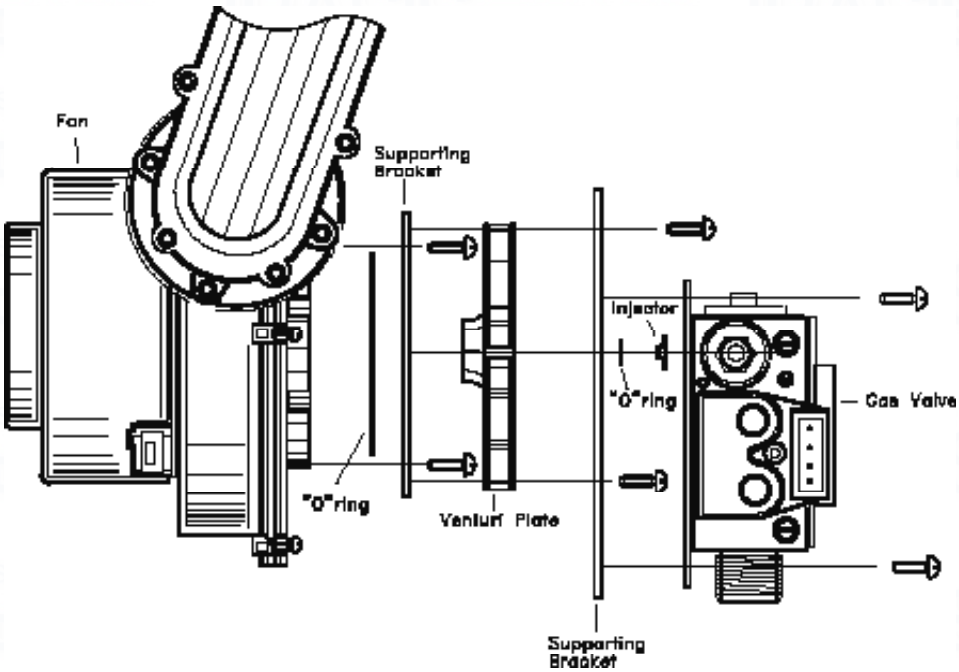

8.9 **TO REMOVE/REPLACE COMBUSTION CHAMBER FRONT INSULATION (Fig.60).**

8.9.1 Remove front casing (sect 8.1.4).

8.9.2 Remove fan,gas valve and burner assembly as in sect.7.2.2.

8.9.3 Remove burner and spark/sensing electrodes and replace in reverse order
NOTE: THE BURNER WILL REQUIRE A NEW GASKET.

8.10 **TO REMOVE/REPLACE COMBUSTION CHAMBER REAR INSULATION .**

8.10.1 Remove front casing (sect 8.1.4).

8.10.2 Remove fan,gas valve and burner assembly as in sect.7.2.2.

8.10.3 Remove securing screw and washer in the center of the insulation and withdraw insulation.

8.10.4 Reassemble in reverse order.

8.11 **TO REMOVE/REPLACE VIEWING GLASS. (Fig.61).**

8.11.1 For access ref. sect. 8.9 (fig.40).

8.11.2 Remove the two screw that securing view glass bracket

8.11.3 Remove view glass .

8.11.4 Remove gasket .

8.11.5 Replace in reverse order.

8.12 TO REMOVE/REPLACE EXPANSION VESSEL (Fig.39).

8.12.1 Remove front casing (sect 8.1.4).

8.12.2 Drain the CH circuit

8.12.3 Remove at the front the securing bracket.

8.12.4 Unscrew the nut that fix the expasion vessel, and carefully lift the vessel up and remove.

8.12.5 Replace in reverse order.
NOTE: Always use new gasket and “O”rings.

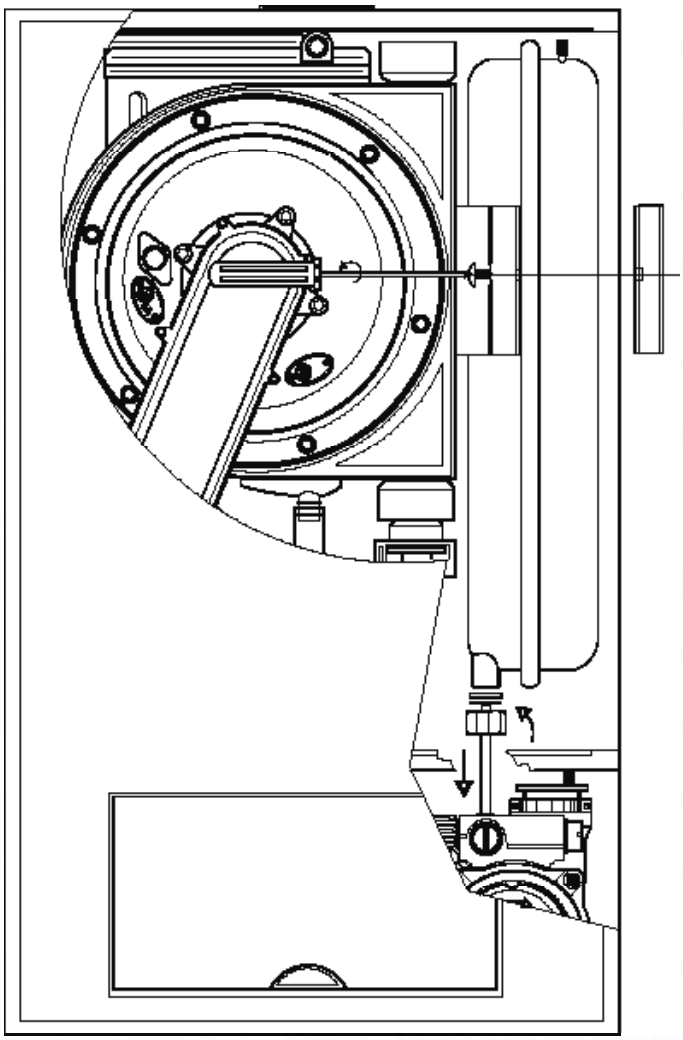

Fig.39

8.13 TO REMOVE/REPLACE PLATE TO PLATE HEAT EXCHANGER .

8.13.1 Remove front casing (sect 8.1.4).

8.13.2 Close off on/off valves for CH circuit and DHW circuit and drain the boiler and drain hot water from the lowest hot water tap
.

8.13.3 Unscrews the two screws that connect the DHW heat exchanger and pull it out from the boiler.

8.13.4 If necessary the pipes from the flow manifold may have to be remove for easier access.

8.13.5 Replace in reverse order.
NOTE: Always use new “O”rings.

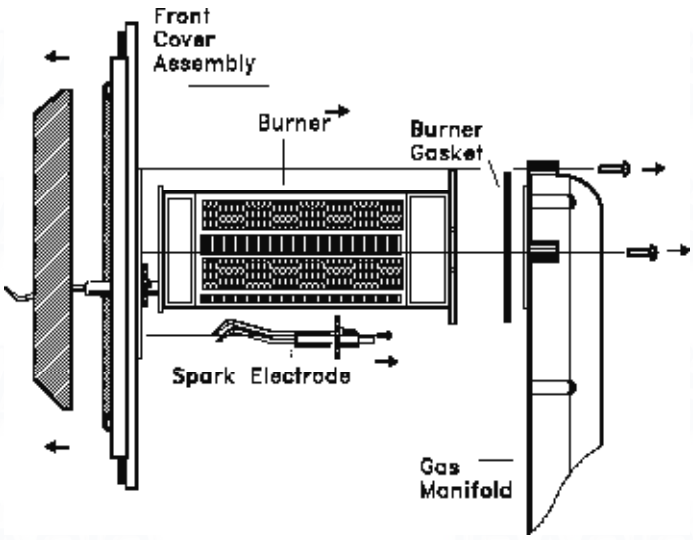

Fig.40

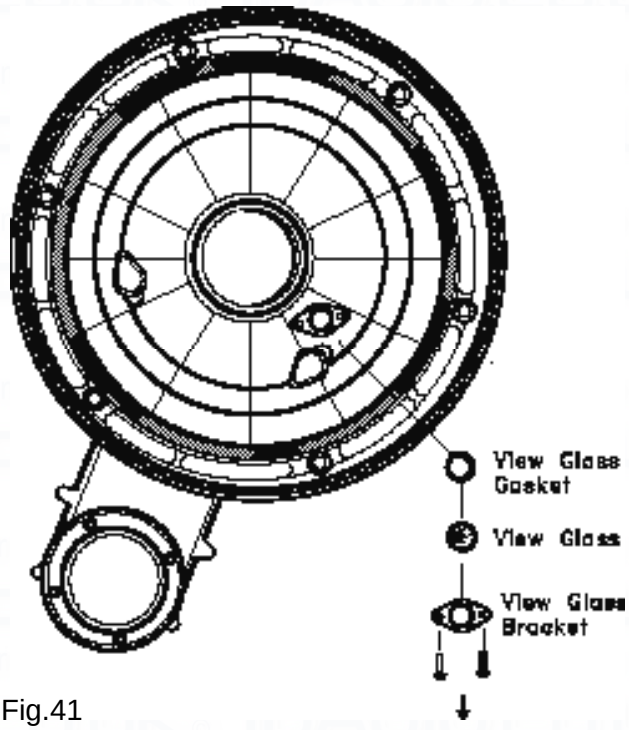

Fig.41

8.14 TO REMOVE/REPLACE FLUE MANIFOLD .

8.14.1 Remove front casing (sect 8.1).

8.14.2 Unscrew and Gently Remove combustion chamber cover assembly with gas valve, fan ,burner and electrodes from combustion chamber.as in sect. 7.2.2

8.14.3 Remove the heat exchanger as sect. 8.6.

8.14.4 Remove the two securing screws and pull to remove the flue manifold.

8.14.5 Replace in reverse order.
NOTE: Always check the flue oring seal.

8.15 TO REMOVE/REPLACE DIVERTER VALVE SWITCH .

8.15.1 Remove front casing (sect 8.1).

8.15.2 Detach the electrical plug and remove the retaining clip.

8.16 TO REMOVE/REPLACE PUMP (Fig.42).

8.16.1 Remove front casing (sect 8.1).

8.16.2 Remove lower grill of the casing and lower the instrument panel with the electrical box.

8.16.3 Detach the supply wire connector from the pump.

8.16.4 Remove the securing clip at the pump manifold.

8.16.5 Remove the securing clip the fastens the pressure gauge probe and expansion vessel pipe to the pump.

8.16.6 Unscrew the nut at the expansion vessel and remove the pipe.

8.16.7 Unscrew the nut that fastens the pump to the CH pipe and remove the pump.

8.16.8 Replace in reverse order.
NOTE : Alway use new seals when re-fitting new pump.

8.17 TO REMOVE/REPLACE C.H. DIVERTER VALVE.

8.17.1 Remove front and bottom of the casing (sect 8.1).

8.17.2 Close the on/off valves for the heating circuit and drain the water at drain point Fig.29.

8.17.3 Remove diverter valve switch (sect.8.15).

8.17.4 Unscrew the C.H.diverter valve as in fig.48.

8.17.5 Replace in reverse order.
NOTE: Always use new o-rings.

8.17.6 Fill the boiler as described in sect.6.4 and check for leasks.

8.17.1 TO REMOVE/REPLACE DHW DIVERTER VALVE.

8.17.1.1 Remove front and bottom of the casing (sect 8.1).

8.17.1.2 Close the on/off valve for the DHW circuit and drain the boiler.

8.17.1.3 Remove the flow detector as fig.48.

8.17.1.4 Unscrew the DHW diverter valve as in fig.68.

8.17.1.5 Replace in reverse order.
NOTE: Always use new o-rings.

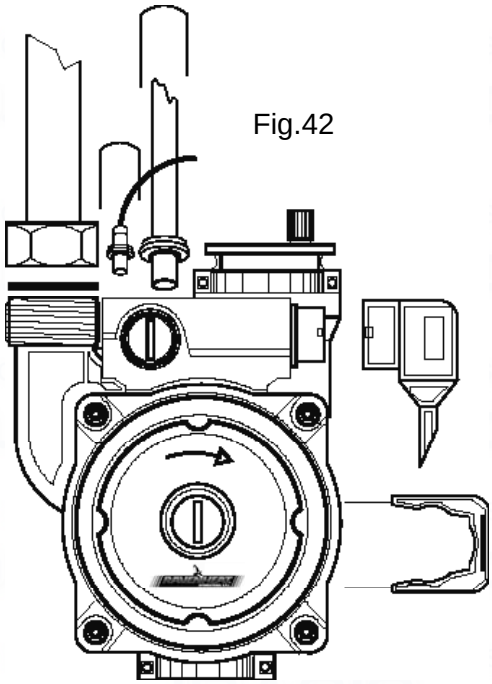

Fig.42

8.18 TO REMOVE/REPLACE THE CENTRAL HEATING AND/OR DOMESTIC HOT WATER THERMISTOR (Fig.43).

8.18.1 Remove front casing (sect 8.1)and lower the instrument panel .

8.18.2 Remove the wires that connect the thermistor.

8.18.3 Remove the retainig clip from the pipe.
NOTE: When reconneting the polarity of the wiring to thermistor is unimportant.

8.18.4 Replace in reverse order.

8.19 TO REMOVE/REPLACE OVERHEAT THERMOSTAT (Fig.43).

8.19.1 Remove front casing (sect 8.1.4)

8.19.2 Remove the two wires that connect to the overheat thermostat.

8.19.3 Remove the two screws securing the thermostat to the pipe and pull it out.

8.19.4 Replace in reverse order

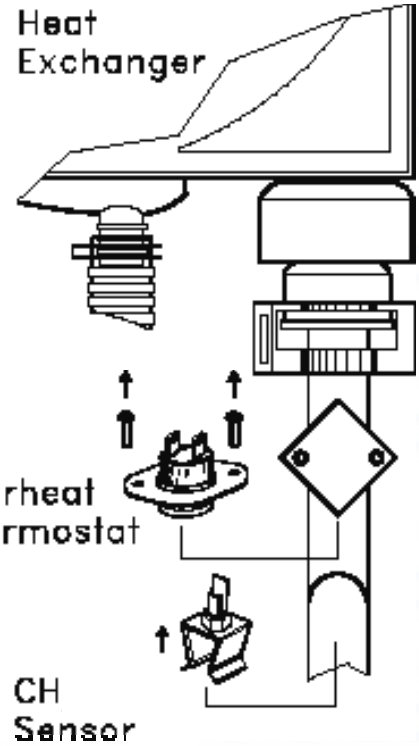

Fig.43

8.20 TO REMOVE/REPLACE AUTOMATIC AIR VENT (Fig.44).

8.20.1 For access ,remove front casing (sect 8.1.4).

8.20.2 Close the on/off valves for C.H. circuit and drain the water from at drain point. Fig.29.

8.20.3 Remove the pump see sect.8.16 **.**

8.20.4 Remove the retainig clip .

8.20.5 Pull the automatic air vent from the pump.

8.20.6 Replace in reverse order and check for leak.
NOTE: Fit a new “O” ring

8.21 TO REMOVE/REPLACE LOW WATER OR DIFFERENTIAL PRESSURE SWITCH - (Fig. 2 - 45) .

8.21.1 Remove front casing (sect 8.1.4).

8.21.2 Close the on/off valves for central Heating circuit and drain the water from the boiler.

8.21.3 Pull wires off and unscrew the low water pressure switch from pump manifold.

8.21.4 Unscrew the nut at the flow water pressure switch, detach the faston and remove it.

8.21.4 Replace in reverse order, fill the system as described in sect.6.4 and check for leaks.

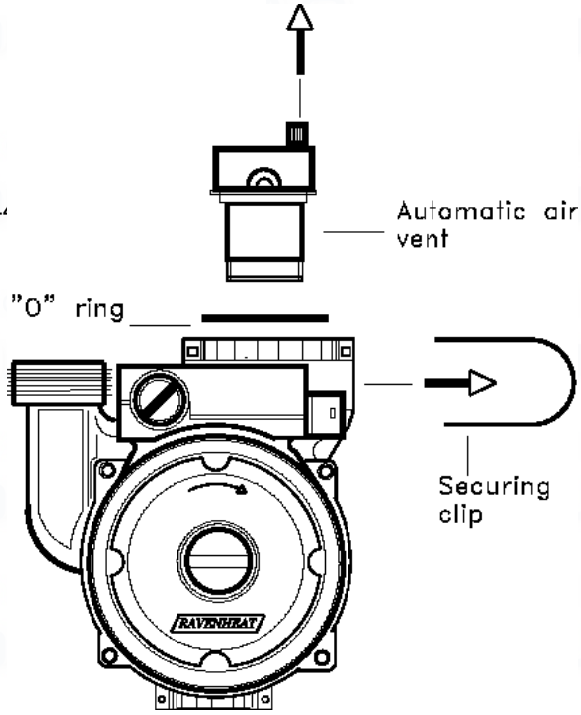

Fig.4

8.22 TO REMOVE/REPLACE SAFETY DISCHARGE VALVE .

8.22.1 Remove front casing (sect 8.1).

8.22.2 Close the on/off valves for central Heating circuit and drain the water from the boiler.

8.22.3 Unscrew the screw below the valve.

8.22.4 Remove the securing clip and remove the pipe. Detach the valve.

8.22.3 Replace in reverse order, use a fill the system as described in sect.6.4 and check for leaks.

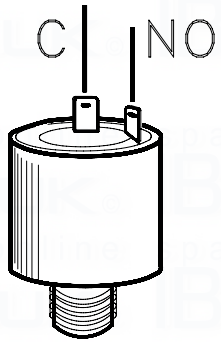

Fig.45

8.23 TO REMOVE/REPLACE TIMECLOCK

8.23.1 Remove front casing (sect 8.1.4) and lower the instrument panel .

8.23.2 Remove control board box cover.

8.23.3 Pull the two securing clip that fasten the timeclock to the panel instrument, and pull it out .

8.23.4 Carefully remove the four wires connecting timer by pulling spade connectors from timer

8.23.5 Replace in reverse order
NOTE: Ensure all electrical connections are made correctly

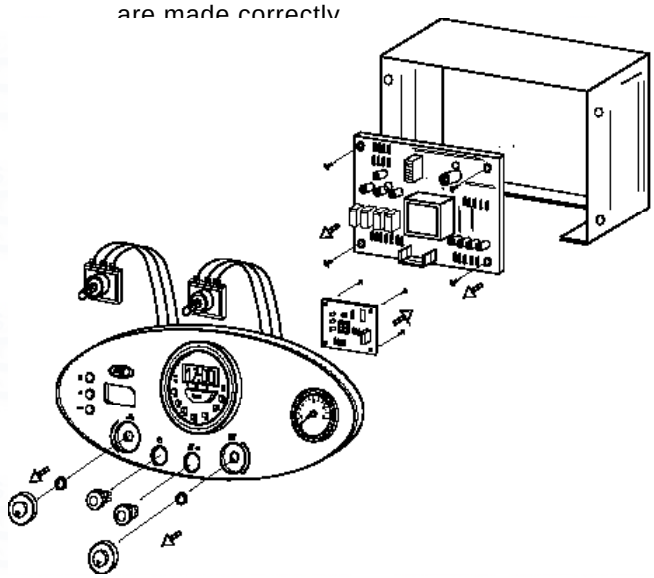

8.24 TO REMOVE/REPLACE CONTROL BOARD (Fig.46).

8.24.1 Remove front casing (sect 8.1.4) and lower the instrument panel .

8.24.2 Remove control board box cover. (sect.8.13.1).

8.24.3 Detach the connectors from the board .

8.24.4 Detach the PCB board from its base by unscrewing the four securing screws.

8.24.5 Replace in reverse order.
NOTE: When refitting the control panel ensure the leads are not trapped.

8.25 TO REMOVE/REPLACE DIGITAL DISPLAY BOARD (Fig.46).

8.25.1 Remove front casing (sect 8.1.4) and lower the instrument panel .

8.25.2 Remove control board box cover.

8.25.3 Detach the connectors from the board.

8.25.4 Detach the Digital Display board from panel instruments by unscrewing the four securing screws.

8.25.5 Replace in reverse order.

8.26 TO REMOVE/REPLACE CONDENSING TRAP (Fig.47).

8.26.1 Remove the casing (sect 8.1.4) and lower the instrument panel .

8.26.2 Remove the securing clip and pull out the plastic pipe that connect the condensing trap at the heat exchanger.

8.26.3 Unscrew the nut that fasten the condensing trap to the depression chamber and remove it.

8.26.4 Replace in reverse order

8.27 TO REMOVE/REPLACE THE MAIN SWITCH (Fig. 49).

8.27.1 Remove front casing (sect 8.1.4) and lower the instrument panel .

8.27.2 Remove the control box cover.

8.27.3 Pull off the switch knob. Remove the switch out from the instrument panel by pressing the clamp springs .

8.27.4 Detach the wires that connect to the switch, make sure that these wires are later reconnected to the same poles .

8.27.5 Replace in reverse order.

8.28 TO REMOVE/REPLACE THE WATER PRESSURE GAUGE (Fig. 49).

8.28.1 Remove front casing (sect 8.1.4) lower the instrument panel and remove lower panel of the case.

8.28.2 Close the on/off valves for the heating circuit and drain the water at the drain point Fig.51A. Remove the retaining clip.

8.28.3 Remove the pressure gauge from the instrument panel by pressing its fastening springs.

8.28.4 Replace in reverse order.

8.29 TO REMOVE/REPLACE FLUE TEMPERATURE SENSOR (Fig. 1)

8.29.1 Remove front casing (sect 8.1.4)

8.29.2 Detach the electrical plug and unscrew the sensor.

8.29.3 Replace in reverse order.

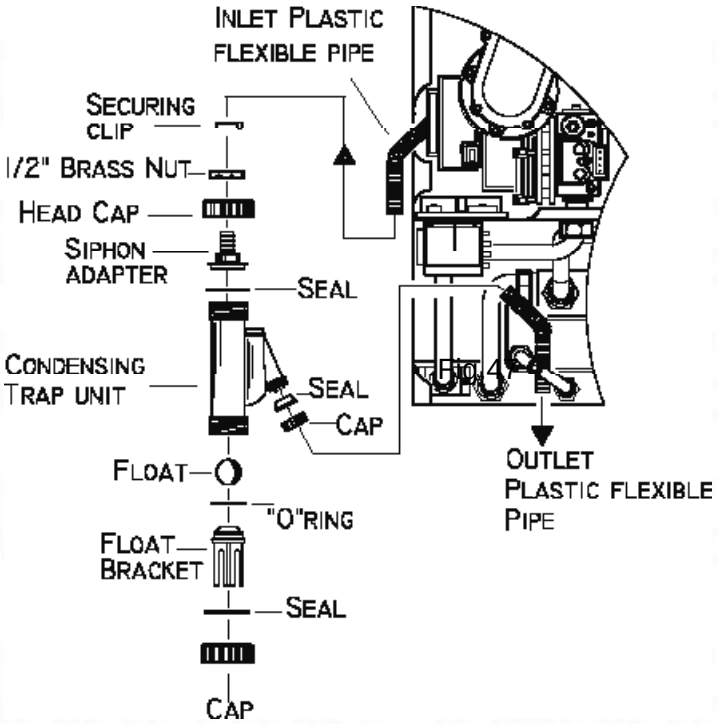

Fig.4

8.30 TO REMOVE/REPLACE TEMPERATURE FLUE SENSOR (Fig. 1)

8.30.1 Remove front casing (sect 8.1.4).

8.30.2 Pull wire off an unscrew the sensor.

8.30.3 Replace in reverse order.

8.31 TO REMOVE/REPLACE MANUAL AIR VENT (Fig. 1)

8.31.1 Remove front casing (sect 8.1.4).

8.31.2 Unscrew the manual air vent and replace in reverse order.

8.32 EXTERNAL HEATING CONTROLS (Fig.49/A).

8.32.1 Remove front and bottom of the casing (sect7.3).

8.32.2 Remove the external wire link on the PCB box.

8.32.3 Replace with external wire controls.

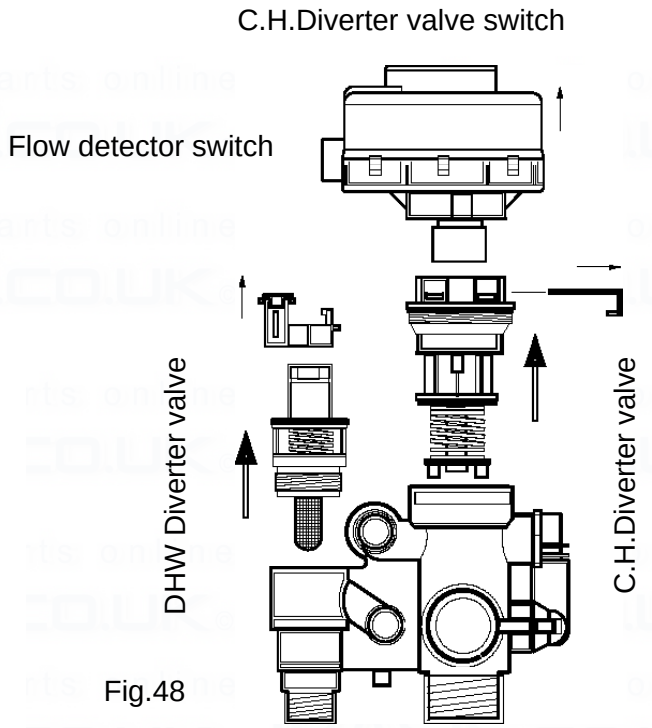

Fig.48

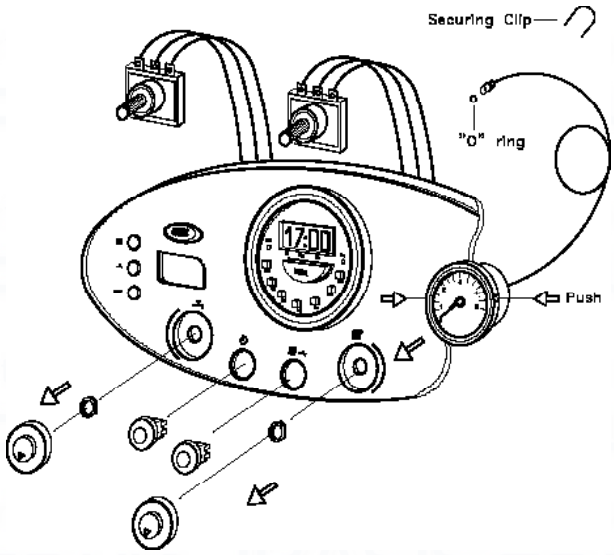

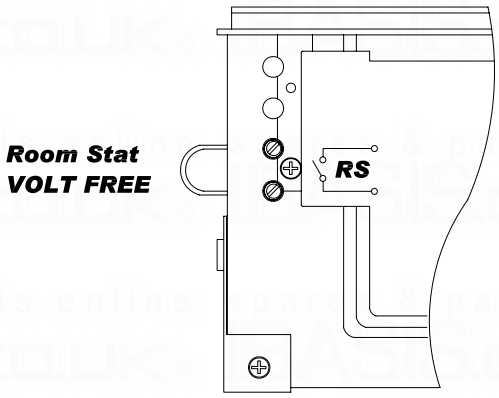

Fig.49/A

SECTION 9 FAULT FINDING CENTRAL HEATING

Before trying to operate the boiler make sure that:
- All gas supply cocks are open and the gas supply has been purge of air.
- The heating system pressure is at least 1 bar min to 1.5 bar Max.
- Main Switch on
- Select “Winter”
- Central Heating control knob to maximum
- Ensure external controls calling for heat (Room stat/Timeclock/TRV)

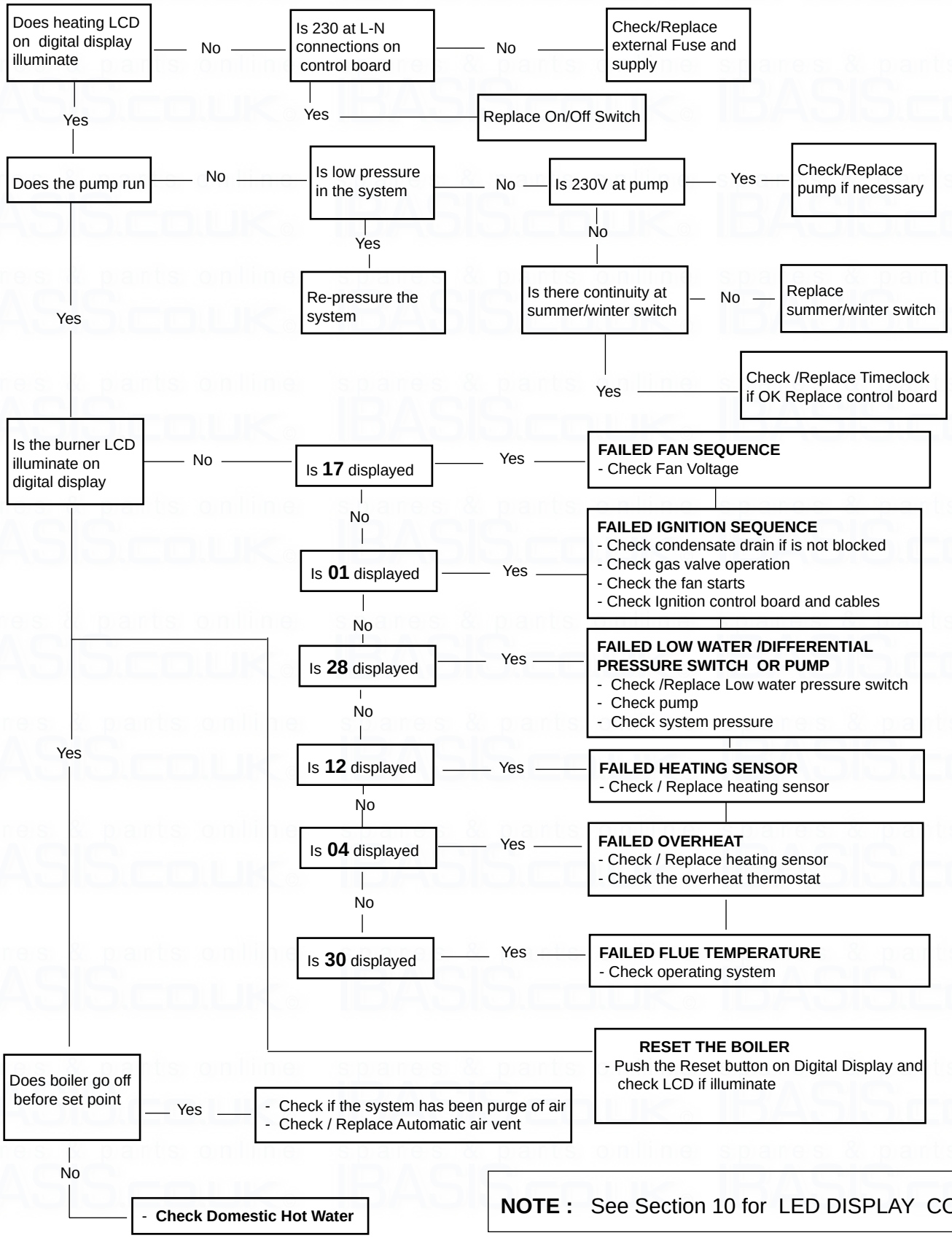

NOTE : See Section 10 for LED DISPLAY CODE

FAULT FINDING DOMESTIC HOT WATER

Before continuing it may be necessary to see Central Heating Fault Finding (Sect.9)

- All gas supply cocks are open and the gas supply has been purge of air.
- The heating system pressure is at least 1 bar min to 1.5 bar Max.
- Main Switch on
- Select "Summer" (Fig.50 item 1A)
- Domestic Hot Water control knob to maximum
- Open Domestic hot tap close to the appliance

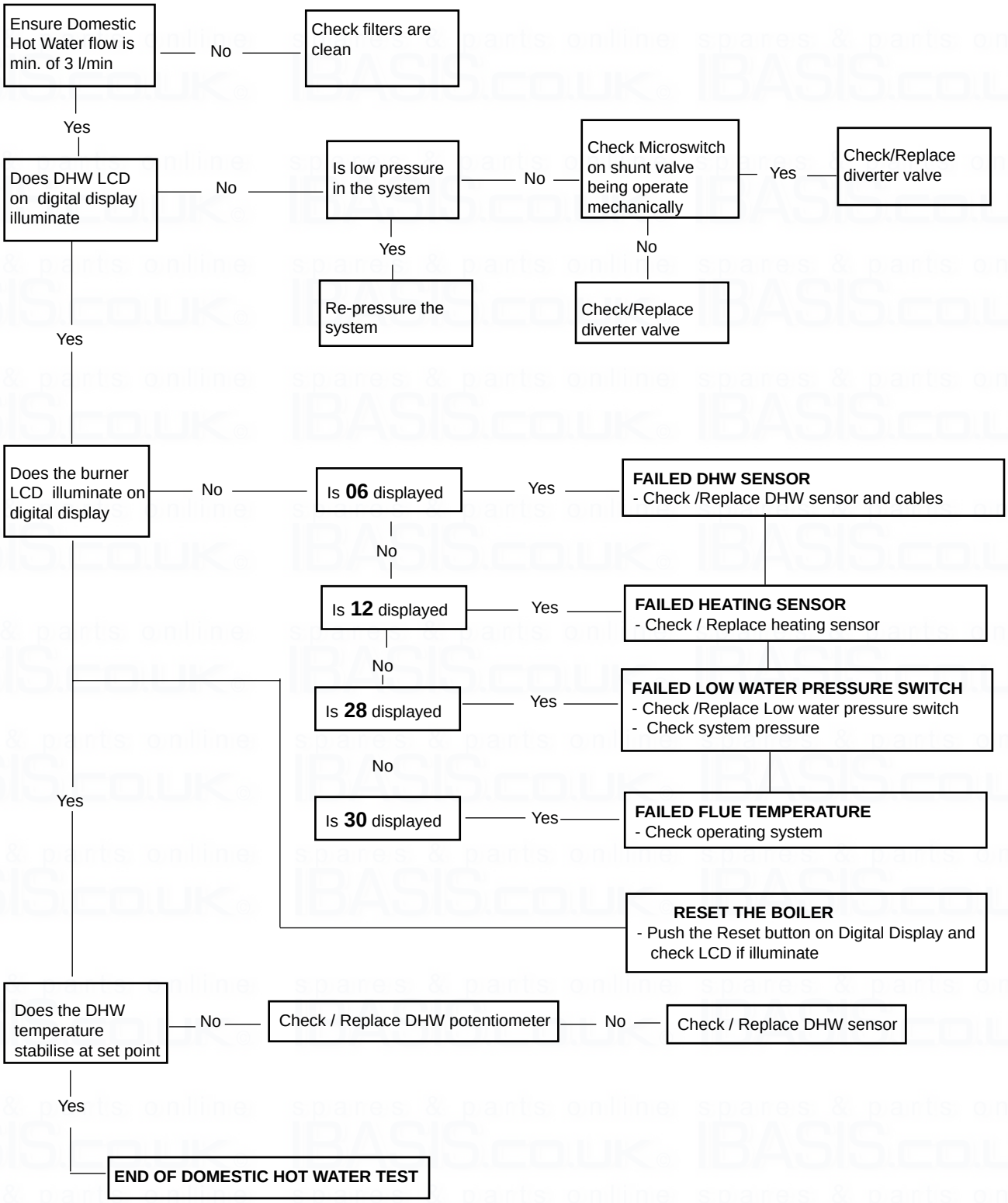

NOTE : See Section 10 for LED DISPLAY CODE

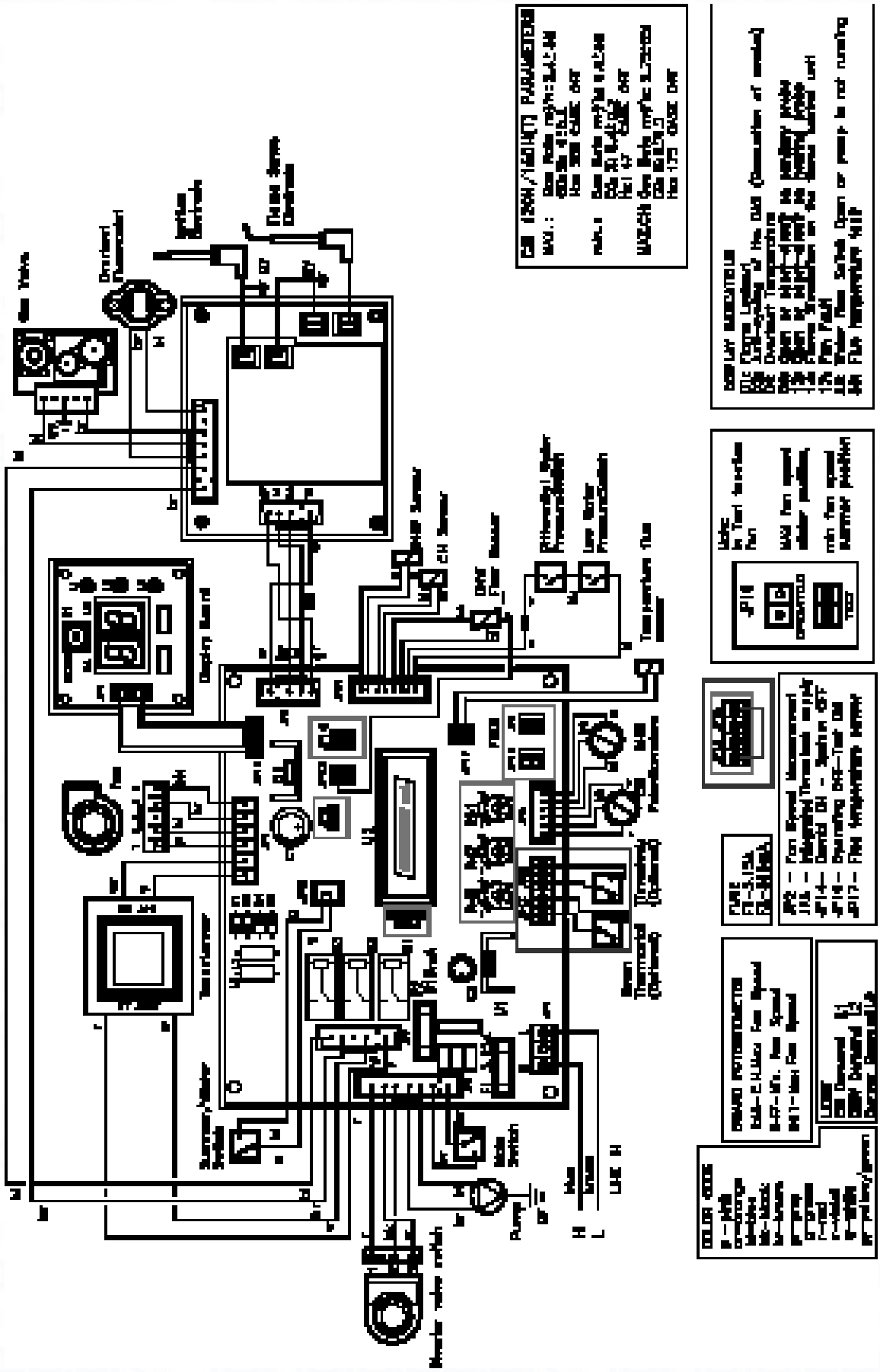

Fig. 50

11.1 INSTALLATION INSTRUCTIONS FOR TWIN FLUE PIPE (ECCENTRIC FLUE DUCT SYSTEM)

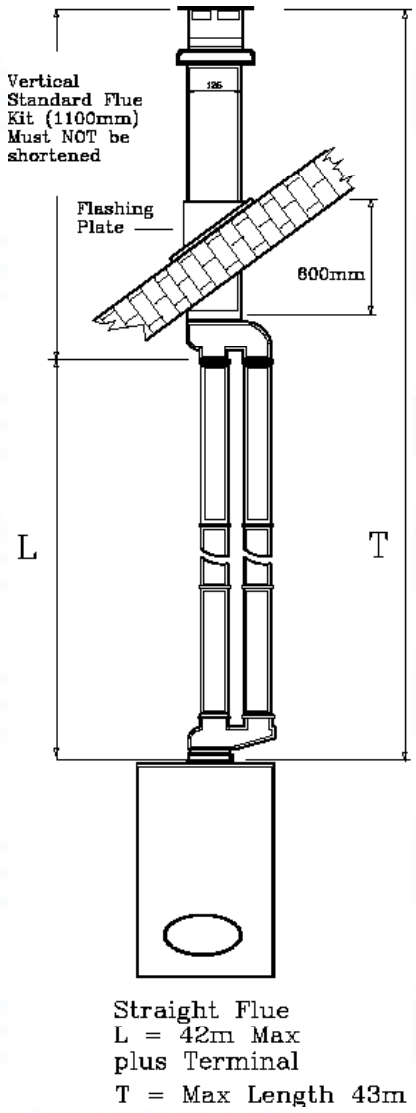

Fig. 51

Part. No	Description
0019SDO11005/0	Twin flue header F80/F80
0019PRO11020/0	Straight pipe L.1000 d80
0019CUR11015/0	90° Elbow d80
0019CUR11020/0	45° Elbow d80
0019GRI11005/0	Air inlet terminal d80
0019GRI11010/0	Exhaust terminal d80
0019TER06011/0	Vertical eccentric flue Terminal

IMPORTANT :Please, lubricate the internal part of the seals before being fitted.

IMPORTANT

These instructions must be read in conjunction with the main installation and servicing instructions

As with all flues the kits must be installed taking due account of the current issue of BS 5440 parts 1 & 2 and timber frame housing REF DM2

Also note that the requirements will vary depending upon the kit being installed.

Guidance is provided but unless otherwise stated, always comply with the recommendations of the relevant codes of practice

11.1.1 TWIN FLUE INSTRUCTIONS

This part of the installation manual covers the installation and fixing instructions of the twin flue eccentric flue duct systems only

When ordering twin flue it must be stated for CSI LOW NOX range.

Typical installation procedures are illustrated by drawings

Before fixing the twin flue system the existing Remove the front panel of the case(sect.8.1)

Unscrew the screw (Fig.16 item 66) on the Flue adapter.

Make sure that the Flue manifold rubber seal is locate into the flue manifold, and lubricate the internal part of the seal before assembly. (see sect. 4.6)

Locate the header gasket on the twin flue header and push into the Flue adaptor (Fig.16 item 56) making sure that the inner plastic exhaust locates firmly in the outlet spigot of the flue manifold, and screw the securing screw that secure the twin flue header on the boiler.

Locate the 2 x 80 mm ‘O’ rings in the twin flue header and lubricate the internal part of the seal before assembly to ensure easy snug fit.(see sect. 4.6)

Figures show the versatility of this flueing system. Measurements and bends must be calculated correctly so as not to oversize maximum flue lengths.

All located ‘O’ rings must be lubricated with a silicone grease to ensure easy, snug fit.

NOTE: Exhaust flue must slope 2.5° down towards the boiler 45 mm/m fall per metre of flue length.

Spacing Clips

Spacing Clips are available on request should they be required.

NOTE: for eccentric vertical flue a 125 mm (5 in) diameter flashing plate will be required.

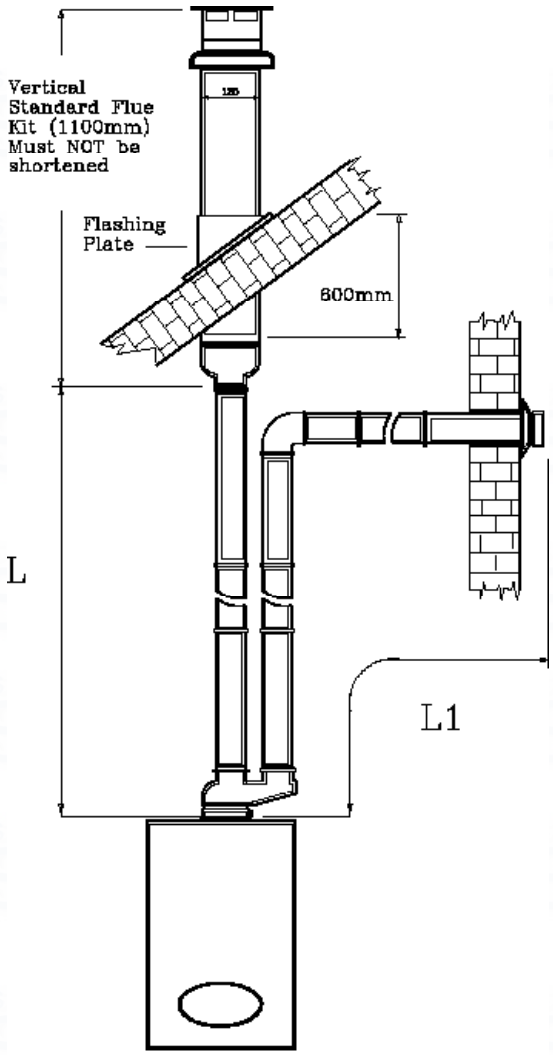

L + L1 = 40.5m
plus Terminal

IMPORTANT:
- **See Fig. 6 and 42 for terminal clearances.**
- **The pressure loss see table 6.**

IMPORTANT NOTICE:
- **inlet and exhaust terminals must never be installed on opposite walls of the building (PrEN 483).**
- If the flue terminates less than 2 m above a balcony, above the ground, or above a flat roof to which people have access, then a suitable terminal guard must be fitted.
- Fit only recommended flue terminal guard by securing concentrically around terminal with screws.

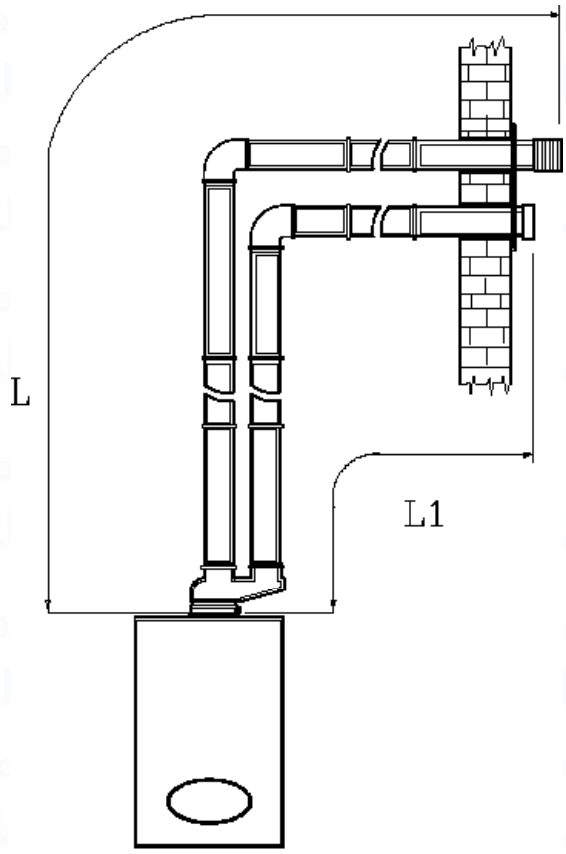

L + L1 = 37m

11.1.2 Exhaust/suction system with two separate rated 80 dia. Pipes - exhaust on flat or sloping roof, suction from vertical wall (Fig.52)

Maximum distance D = L + L1 = 40.5 metre + Terminal
Minimum total length = 2 metre
NOTE: Exhaust flue must slope 2° down towards the boiler 35 mm fall per metre.

11.1.3 Exhaust/suction system with concentric pipes for flat or sloping roofs. Extensions with two separate pipes (Fig.51).

Maximum distance : T= L = 21+21 = 42 metre+Terminal
Minimum distance : L = 0.5+0.5=1metre + Terminal
Exhaust terminal must not be cut
NOTE:
- If bends are used in the exhaust flue then horizontal
- sections must be avoided and there must be a 2° slope
- towards the boiler 35 mm fall per metre.

IMPORTANT :Please, lubricate the internal part of the seals before being fitted.

11.1.4 Exhaust/suction system with two separate pipes through a single vertical wall (Fig.53).

Maximum distance : D = L + L1 = 37 metre
Minimum distance : D = L + L1 = 1 metre
Min distance between pipe 50 mm.

Available on request from:
RAVENHEAT MANUFACTURING LTD
Chartist Way,Morley, Leeds, West Yorkshire
ENGLAND LS27 9ET - U.K.
Tel. 0044(0) 113 252 7007

11.2 INSTALLATION INSTRUCTIONS FOR CONCENTRIC 80/125 FLUE SYSTEM

11.2.1 The vertical 80/125flue kit is intended for use where a horizontal 60/100 flue outlet is not possible or desired. The vertical flue can be used either with a flat roof or a pitched roof (maximum pitch 60°). Where a straight vertical flue is not possible or desired, an offset vertical flue can be used in conjunction with a side horizontal flue extension piece and an inline 135°/90° flue bend (Fig. 54).

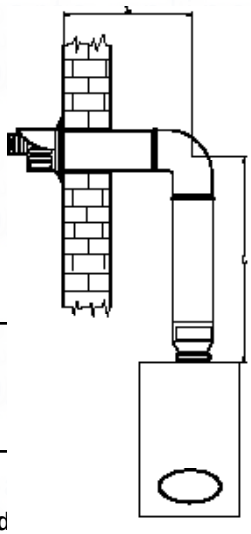

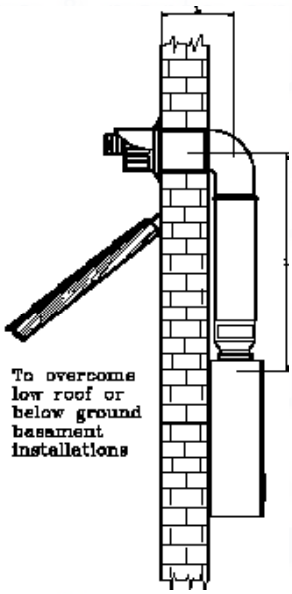

IMPORTANT:
- **See Fig. 54 and 55 for terminal clearances.**
- **The pressure loss see table 6.**

IMPORTANT NOTICE:
- When using our vertical flue kit the 125mm x 100 red supplied complete with the vertical terminal simply rem and fix it into the flue adaptor on the top of the boiler

Fig. 55

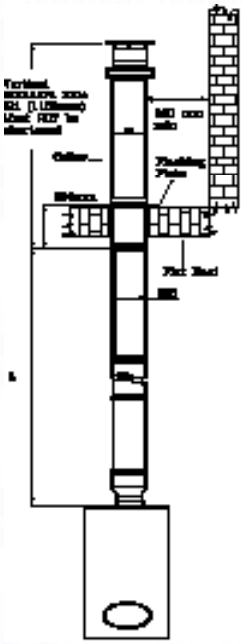

Straight Flue
L = 25 m Max
plus Terminal

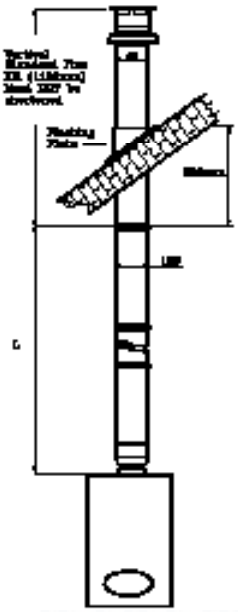

Straight Flue
L = 25 m Max
plus Terminal

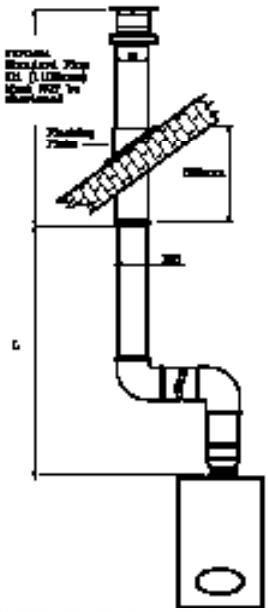

90° Offset Flue
L = 21.0 m Max
plus Terminal

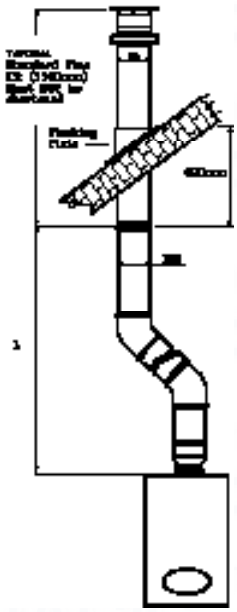

135° Offset Flue
L = 22.5 m Max
plus Terminal

NOTE : If using Flue arrangement in Fig.54 then the 125x100 Flue reducer must be purchased separately

Part No	Description
0019PRO11030/0	Flue Extension 80/125 L1000
0019PRO11025/0	Flue Extension 80/125 L500
0019RID11005/0	125/80 to 100/60 Flue reducer
0019CUR11025/0	45° Flue bend 80/125
0019CUR11030/0	90° Flue bend 80/125
0019TER01005/0	Horizontal Flue Terminal 80/125
0019TER11010/0	Vertical Flue Terminal 80/125
0019TEG06005/0	Flashing sleave

IMPORTANT :Please, lubricate the internal part of the seals before being fitted.

Available on request from:
RAVENHEAT MANUFACTURING LTD
Chartist Way,Morley, Leeds, West Yorkshire
ENGLAND LS27 9ET - U.K.
Tel. 0044(0) 113 252 7007

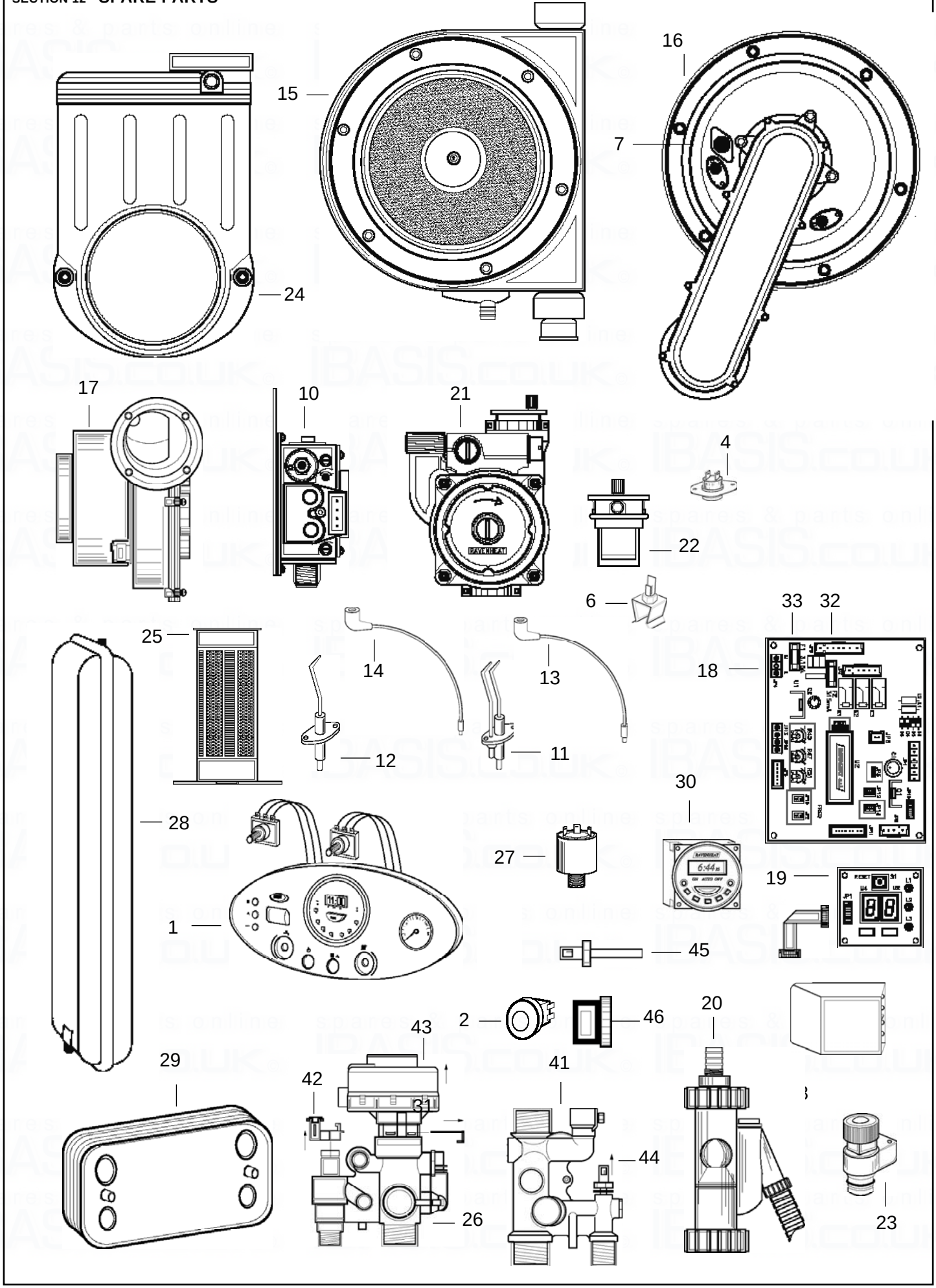
15
16
7
24
17
10
21
4
22
6
33
32
25
14
13
18
12
11
30
28
27
19
1
45
2
46
20
43
29
42
41
31
44
26
23

RAVENHEAT CSI 120/150 (T) LOW NOX
HIGHT EFFINCENCY CONDENSING COMBINATION BOILER

SHORT LIST OF SPARE PARTS

Pos.	Ravenheat Part. No.	G.C. Part. No.	Description
1	0014PAN11020/0		Instrument panel
2	0012INT11005/0		Main - Summer/Winter switch
3	0012POT11005/0	H61-671	DHW / CH Potentiometer assembly
4	0007TER08010/0	H49- 959	Overheat thermostat
5	0006IDR11005/0	H61-672	Water pressure gauge
6	0007TER05006/0	H49-875	Water pressure gauge
7	0014VET11005/0	H61-673	Sight glass
8			Sparking igniter
9			
10	0008VAL11005/0	H61-675	Dungs Gas control valve CSI 120
10.1	0008VAL11015/0		Dungs Gas control valve CSI 150
11	0012CAN11005/0	H61-676	Ignition electrode
12	0012CAN11010/0	H61-677	Sensing electrode
13	0012CAV11005/0	H61-678	Cable for Spark electrode
14	0002SCA11010/0	H61-679	Cable for Sensing electrode
15	0002SCA11010/0	H61-679	Heat exchanger CSI120
15.1	0002SCA11015/0		Heat exchanger CSI150
16	0002COP11005/0	H61-680	Heat Exchanger cover assembly
17	0012VEN11005/0	H61-681	Fan
18			Modulating Control Board
19			Digital Display Board
20	0014RAC11005/0	H61-683	Condensing trap
21	0009CIR11005/0	H21-163	Circulation pump
22	0008VAL11010/0	H61-684	Air purge valve
23	0008VAL01018/1	H49-840	Safety relief valve (3 bar)
24	0002COL11005/0	H61-685	Flue gas exhaust Manifold
25	0003BRU11005/0	H61-686	CSI120 Burner
25.1	0003BRU11010/0		CSI150 Burner
26	0011GRU11010/0		Flow return
27	0005PRE05010/1	H50-011	Low water pressure switch
28	0004VAS11011/0	H61-687	Expansion tank

Pos.	Ravenheat Part. No.	G.C. Part. No.	Description
29	0002SCA09030/0		Heat exchanger for D.H.W. CSI120
29.1	0002SCA09025/0		Heat exchanger for D.H.W. CSI150
30	0012ORO01010/0	H61-689	Digital Timer
32	0012FUS01010/0	H61-690	Internal fuse 315mA
33	0012FUS01015/0	371-275	Internal fuse 3.15A
34	0013ORI11030/0		DHW Heat exchanger O”ring”
35	0013ORI11005/0	H61-694	Valv. gas / Mixer O”ring”
36	0013ORI11010/0	H61-695	Pump / Manifold O”ring”
37	0013ORI11015/0	H61-696	Pump / press.gauge O”ring”
38	0013ORI11020/0	H61-697	Pump / Exp. vassel O”ring”
39	0013ORI11025/0	H61-698	Heat exchanger O”ring”
40	0019FLA11005/0	H61-699	Flue Adaptor
41	0011GRU11005/0		Flow manifold
42	0012RIV11005/0		Flow detector
43	0012MOT11005/0		Diverter valve switch
44	0007TER05005/0		DHW sensor
45	0007TER11035/0		Temperature flue sensor
46	0008VAL11020/0		Manual air vent valve
47	0005PRE11015/0		Differential water pressure switch

Chartists Way, Morley, Leeds, LS27 9ET

Telephone : 0044(0)113 252 7007
Tfax : 0044(0)113 238 0229
Website : www.ravenheat.co.uk
E-mail : sales@ravenheat.co.uk

Ravenheat reserves the right to make changes and improvements in our products which may affect the accuracy of the information contained in thi leaflet.

COD 0017LIB11010/1 - 09/2008

The code of practice for the installation, commissioning & servicing of gas central heating

Installation, Commissioning and Service Record Log Book

CUSTOMER DETAILS

NAME

ADDRESS **TEL No.**

IMPORTANT

1. Please keep the Log Book in a safe place for future reference.
2. This Log Book is to be completed in full by the competent person(s) who commissioned the boiler and associated equipment and then handed to the customer. When this is done, the Log Book is a commissioning certificate that can be accepted as evidence of compliance with the appropriate Building Regulations.
3. Failure to install and commission this appliance to the manufacturer's instructions may invalidate the warranty. The above does not affect your statutory rights.

INSTALLER & COMMISSIONING ENGINEER DETAILS

INSTALLER DETAILS

COMPANY NAME **INSTALLATION DATE**

ADDRESS **TEL No.**

INSTALLER'S NAME

CORGI REGISTRATION DETAILS **REG No.** **CORGI ID SERIAL No.**

COMMISSIONING ENGINEER (IF DIFFERENT)

NAME **COMMISSIONING DATE**

ADDRESS **TEL No.**

CORGI REGISTRATION DETAILS **REG No.** **CORGI ID SERIAL No.**

APPLIANCE & CONTROL DETAILS

BOILER

MAKE AND MODEL

APPLIANCE SERIAL No. **SEDBUK No.** ☐ **%**

LOCATION **NEW SISTEM** ☐ **or REPLACEMENT BOILER** ☐

CONTROLS

To comply with the Building Regulations, each section must have a tick in one or other of the boxes.

REQUIREMENT	MEASURES PROVIDED			
1. TIME AND TEMPERATURE CONTROL TO HEATING	ROOM STAT & PROGRAMMER/TIMER	☐	PROGRAMMABLE ROOMSTAT	☐
2. TIME AND TEMPERATURE CONTROL TO HOT WATER	CYLINDER STAT & PROGRAMMER/TIMER	☐	COMBI BOILER	☐
3. HEATING ZONE VALVES	FITTED	☐	NOT REQUIRED	☐
4. THERMOSTATIC RADIATOR VALVES	FITTED	☐		☐
5. AUTOMATIC BYPASS TO SYSTEM	FITTED	☐	NOT REQUIRED	☐
6. BOILER INTERLOCK	PROVIDED	☐		☐

PLEASE FOLLOW THE INSTALLATION AND COMMISSIONING INSTRUCTIONS IN THE INSTALLATION MANUAL SUPPLIED WITH THE EQUIPMENT

COMISSIONING PROCEDURE INFORMATION

FOR ALL BOILERS

HAS THE SYSTEM BEEN FLUSHED IN ACCORDANCE WITH THE BOILER MANUFACTURER'S INSTRUCTIONS? **YES** ☐ **NO** ☐ **WHAT WAS THE CLEANSER USED?**

HAS AN INHIBITOR BEEN USED? **YES** ☐ **NO** ☐

WHICH INHIBITOR WAS USED?

For the central heating mode, measure and record:

HEAT INPUT ☐ **kW**

BURNER OPERATING PRESSURE ☐ **mbar**

CENTRAL HEATING FLOW TEMPERATURE ☐ **°C**

CENTRAL HEATING RETURN TEMPERATURE ☐ **°C**

FOR COMBINATION BOILERS ONLY

HAS A WATER SCALE REDUCER BEEN FITTED? **YES** ☐ **NO** ☐

WHAT TYPE OF SCALE REDUCER HAS BEEN FITTED?

The content of this Log Book has been produced in consultation with

DTLR

© CENTRAL HEATING INFORMATION COUNCIL

Benchmark is supported by

For the domestic hot water mode, measure and record:

HEAT INPUT		**kW**
MAXIMUM BURNER OPERATING PRESSURE		**mbar**
MAXIMUM OPERATING WATER PRESSURE		**bar**
COLD WATER INLET TEMPERATURE		**°C**
HOT WATER OUTLET TEMPERATURE		**°C**
WATER FLOW RATE AT MAXIMUM SETTING		**lts/min**

FOR CONDENSING BOILERS ONLY

HAS THE CONDENSATE DRAIN BEEN INSTALLED IN ACCORDANCE WITH THE MANUFACTURER'S INSTRUCTIONS? **YES** ☐ **NO** ☐

FOR ALL INSTALLATION

DOES THE HEATING AND HOT WATER SYSTEM COMPLY WITH THE APPROPRIATE BUILDING REGULATIONS?	**YES** ☐
HAS APPLIANCE AND ASSOCIATED EQUIPMENT BEEN INSTALLED AND COMMISSIONED IN ACCORDANCE WITH THE MANUFACTURER'S INSTRUCTIONS?	**YES** ☐
HAVE YOU DEMONSTRATED THE OPERATION OF THE APPLIANCE AND SYSTEM CONTROLS TO THE CUSTOMER?	**YES** ☐
HAVE YOU LEFT ALL THE MANUFACTURER'S LITERATURE WITH THE CUSTOMER?	**YES** ☐

COMPETENT PERSON'S SIGNATURE **CUSTOMER'S SIGNATURE**

(To confirm demonstrations of equipment and receipt of appliance instructions)

SERVICE INTERVAL RECORD

It is recommended that your heating system is serviced regularly and that your service engineer completes the appropriate Service Interval Record below.

SERVICE PROVIDER

Before completing the appropriate Service Interval Record below, please ensure you have carried out the service as described in the boiler manufacturer's instructions and in compliance with The Gas Safety Regulations.
Always use the appliance manufacturer's specified spare part when replacing gas controls.

SERVICE 1 **DATE:**
ENGINEER NAME
COMPANY NAME
TEL No.
CORGI ID SERIAL No.
COMMENTS
SIGNATURE

SERVICE 2 **DATE:**
ENGINEER NAME
COMPANY NAME
TEL No.
CORGI ID SERIAL No.
COMMENTS
SIGNATURE

SERVICE 3 **DATE:**
ENGINEER NAME
COMPANY NAME
TEL No.
CORGI ID SERIAL No.
COMMENTS
SIGNATURE

SERVICE 4 **DATE:**
ENGINEER NAME
COMPANY NAME
TEL No.
CORGI ID SERIAL No.
COMMENTS
SIGNATURE

SERVICE 5 **DATE:**
ENGINEER NAME
COMPANY NAME
TEL No.
CORGI ID SERIAL No.
COMMENTS
SIGNATURE

SERVICE 6 **DATE:**
ENGINEER NAME
COMPANY NAME
TEL No.
CORGI ID SERIAL No.
COMMENTS
SIGNATURE

SERVICE 7 **DATE:**
ENGINEER NAME
COMPANY NAME
TEL No.
CORGI ID SERIAL No.
COMMENTS
SIGNATURE

SERVICE 8 **DATE:**
ENGINEER NAME
COMPANY NAME
TEL No.
CORGI ID SERIAL No.
COMMENTS
SIGNATURE

SERVICE 9 **DATE:**
ENGINEER NAME
COMPANY NAME
TEL No.
CORGI ID SERIAL No.
COMMENTS
SIGNATURE

SERVICE 10 **DATE:**
ENGINEER NAME
COMPANY NAME
TEL No.
CORGI ID SERIAL No.
COMMENTS
SIGNATURE

When all of the above services have been completed, please contact your Service Engineer for an additional service interval record sheet.

GBLB Second Edition 01.03.02