Instructions for Use
Installation and Servicing
To be left with the user

HIGH EFFINCENCY

CONDENSING

PRIMARY BOILER

CSI Primary AAA

Natural Gas (G20) I_{2H} - II_{2H3+}

G.C. No. 47-581- 05

LPG (G30-G31) I_{3+} - II_{2H3+}

G.C. No. 47-581-06

Listed by The United Kingdom Water Fitting Byelaws Scheme

CE 0087

The code of practice for the installation, commissioning & servicing of central heating systems

Technical and illustative data are not binding and can be modified without prior notice.
The descriptions and illustrations in the present booklet are for guideline purposes only.

RAVENHEAT MANUFACTURING LTD, CHARTISTS WAY, MORLEY, LEEDS, LS27 9ET
TEL. 0044(0)113 252 7007 - FAX: 0044 (0)113 238 0229
Website : www.ravenheat.co.uk - E-mail : sales@ravenheat.co.uk

CONDENSING SYSTEM INNOVATION

CENTRAL HEATING BOILER

This new super high efficient boiler is designed to meet heating requirements at super high efficiency, unheard of only a few years ago

POSITION

The appliance is extremely versatile as it can be fitted in almost any room The appliance is room sealed, there is no contact between combustion chamber and living accommodation This guarantees maximum safety and efficiency Indeed, our depression/combustion front cover has been designed to fit, achieving maximum air tight seal using screw down fasteners at 15 cm This should not hinder service of the appliance, but does ensure maximum efficiency and safety - something which Ravenheat take great pride in

Each boiler has been designed and manufactured in our modern plant to exacting ISO 9001 discipline, all boilers carry full CE marking of approval Technical sales and commercial service are available throughout the UK This product is guaranteed by Ravenheat Manufacturing, Chartists Way, Morley, LEEDS, LS27 9ET Telephone No (0113) 252 7007

BASIC COMPONENTS - (See figure 1)

Guarantee is a full 12 months from date of purchase providing the appliance has been fitted in accordance with these instructions and relevant codes of practice

MAJOR COMPONENTS

- Gas valve
- Burner with flame stabiliser designed to operate under all thermal conditions
- Primary heat exchanger constructed from copper
- Unique **patented condensing heat exchanger** for high thermal flue transfer gases to water
- Aesthetically pleasing panels and controls
- On/Off ball valve for shutting off gas
- Programmable 7 day module with digital display (optional)

NOTE: Due to the high efficiency of this boiler a plume of water vapour will form at the flue terminal during operation.

COSHH - CONTROL OF SUBSTANCES HARMFUL TO HEALTH

IMPORTANT

This appliance contains materials that are indicated below.
It is the Users/Installers responsibility to ensure that the necessary personal protective clothing is worn when handling, where applicable, the pertinent parts that contain any materials that could be interpreted as being injurious to health and safety.

WARNING When installing the appliance, care should be taken to avoid any possibility of injury when handling sheet metal parts

GENERAL INFORMATION
GLUES AND SEALANTS - exercise caution - if these are still in liquid form
INSULATION PADS, CERAMIC FIBRE - may be harmful if inhaled, may be irritating to skin, eyes, nose and throat.
When handling keep dust generation to a minimum, avoid inhaling and contact with skin or eyes .
When disposing of the product keep dust generation to a minimum and ensure that parts are securely wrapped.
When servicing avoid inhalation by using a vacuum cleaner or in conjunction with other tools .
After handling wash hands and other exposed parts.
RAVENHEAT use only high quality material for production of this product, in an effort to protect the environment components should be re-cycled.

TABLE OF CONTENTS

SECTIONS		PAGE
1	INTRODUCTION	6
2	DESIGN PRINCIPLES AND OPERATING SEQUENCE	6
3	TECNICAL DATA	8-9
4	GENERAL REQUIREMENTS	6
5	INSTALLATION	15
6	COMMISSIONING	26
7	SERVICING INSTRUCTIONS	30
8	FAUL FINDING	37
9	ELECTRICAL SYSTEM DIAGRAM	38
10	EXPLODED PARTS DIAGRAM	42
11	LIST OF SPARE PARTS	43

GENERAL LAYOUT

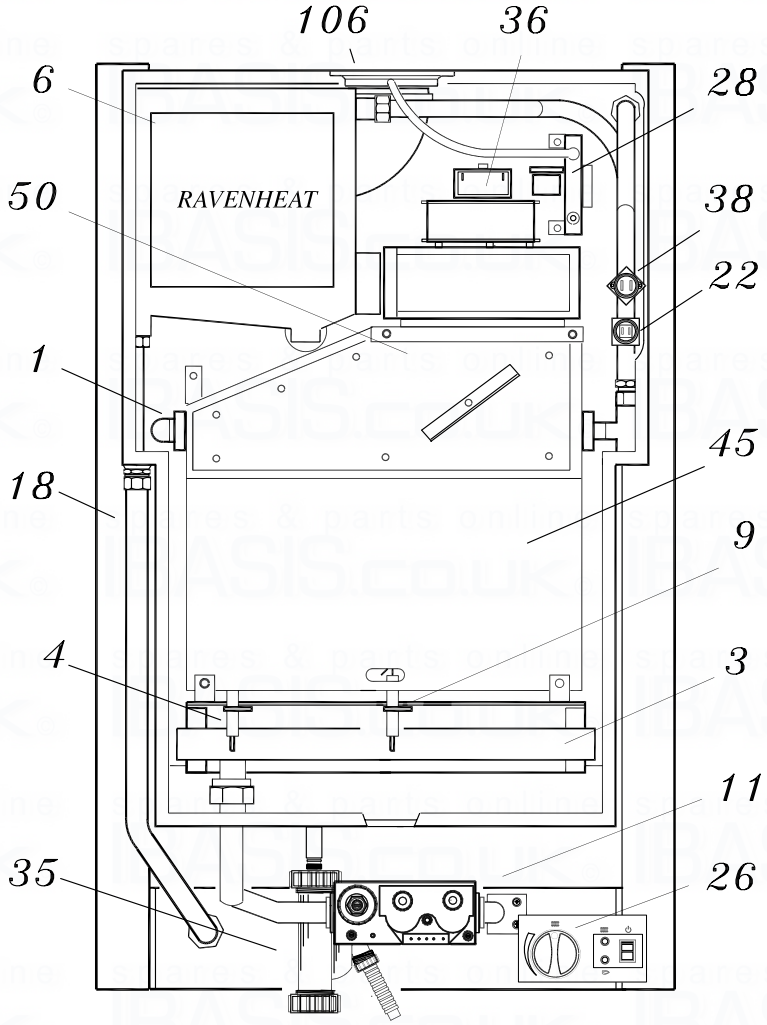

Fig.1

KEY

1 - Heat exchanger
3 - Burner
4 - Sensing electrode
6 - Condensing heat exchanger
9 - Ignition electrode
11- Modulating Gas Valve
15 - Heat control thermostat
18 - Frame
22 - C.H. sensor
26 - Heating control
28 - Air Pressure switch
35 - Condensing trap
36 - Fan
38 - Overheat cut off thermostat
45 - Combustion chamber
50 - Flue gas exhaust hood
106 - Flue restriction ring

OPERATING SCHEME

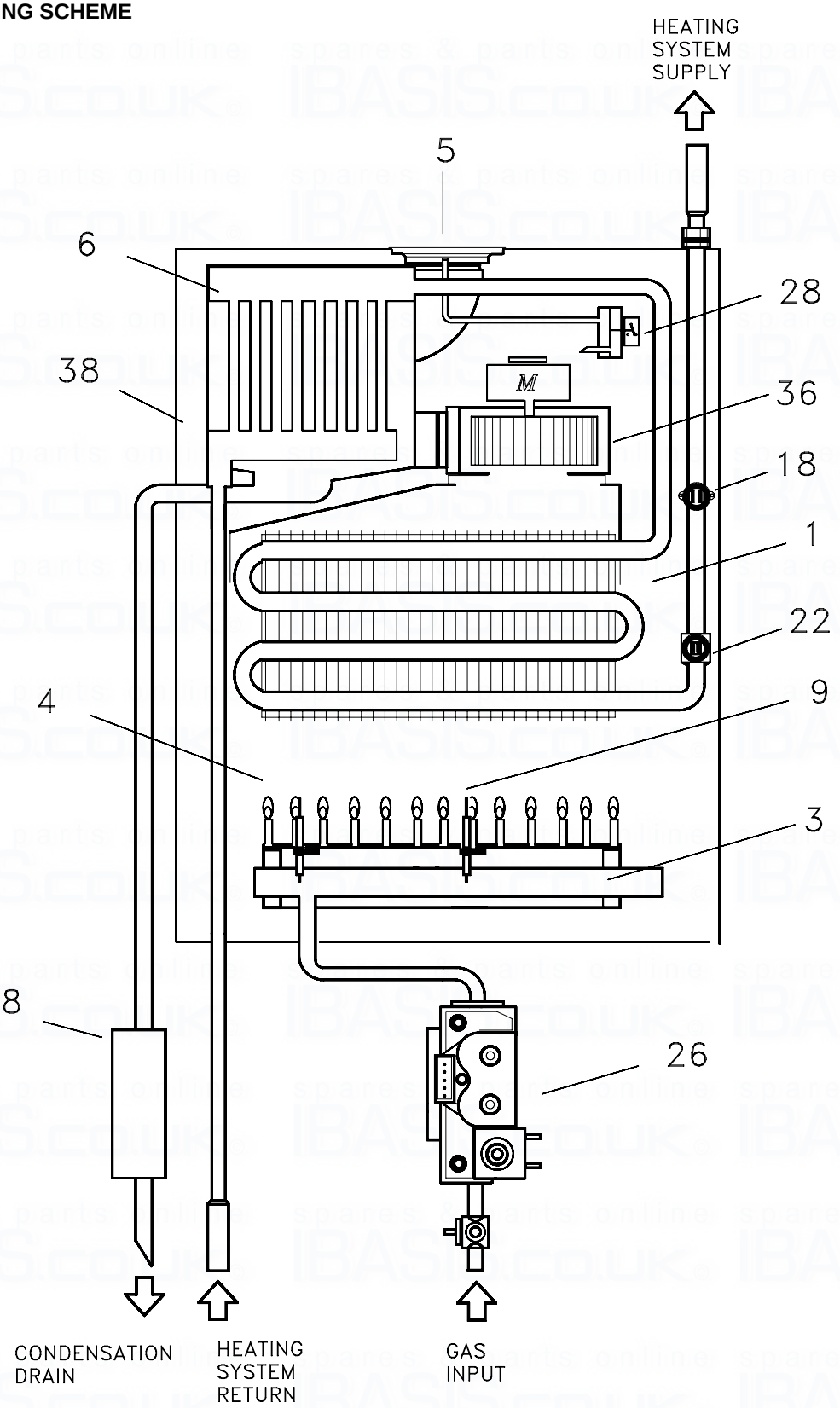

Fig.2

KEY

1 - Heat exchanger
3 - Burner
4 - Sensing electrode
5 - Flue restriction rin
6 - Condensing heat exchanger
8 - Condensing trap
9 - Ignition electrode
18 - Overheat cut-off thermostat
22 - C.H. sensor
26 - Modulating Gas Valve
28 - Air Pressure switch
36 - Fan
38 - Sealed chamber

SECTION 1 INTRODUCTION

1.1 The CSI Primary is a gas fired room sealed fan assisted condensing heating boiler suitable for fully pumped open vented or sealed system central heating and domestic hot water systems.

1.2 The provision of stored domestic hot water is possible by the addition of an indirect cylinder with 'Y' or 'S' plan controls The data badge is placed on the front panel.

1.2.1 Fig 1 illustrates the general layout of components.
Fig.2 illustrates the operating principals described in section 2.

SECTION 2 DESCRIPTION OF CONTROL SYSTEM AND SEQUENCE OF OPERATION

2.1 If the main neon is on with a demand for heat to the system (radiators etc) the fan operates via the pressure switch and sends a signal back to the ignition board that the fan is running at maximum speed.

2.2 The spark ignition system is powered which in turn commences the spark ignitor to operate and light the burner. At this point the ignition board opens the gas valve to light the burner.

2.2.1 When the electrode/sensor senses the signal of the burner the spark ignition stops.

2.2.2 From the minimum gas rate setting the boiler increases to the maximum permissible pressure over a period of 3 to 4 seconds and will remain at its maximum required power until its maximum regulated temperature.

2.2.3 When the boiler thermostat is satisfied the boiler will go to rest mode, the burner is shut down and the pressure switch will return back to its rest mode.

2.2.4 As the heating sensor reaches temperature the gas burner power modulates down, the fan speed. When starting, the fan will always start at maximum speed.

2.2.5 The boiler is fitted with an anti-cycling device on the control board. This delays the boiler from re-firing over a 2/5 minute period.

2.3 GENERAL FUNCTION

2.3.1 The gas valve boiler output settings may be adjusted to requirements other than factory settings.

2.3.2 Air is drawn by the fan for combustion.

2.3.3 he fan also forces exhaust gas through the flue to the outside, this creates a lesser pressure in the sealed combustion chamber, thus sucking in combustion air through the inlet duct.

2.3.4 The boiler water temperature is automatically controlled by a built in thermostat.

2.3.5 Interior space temperature is set by the room thermostat to be installed in the heating system The boiler already carries connection terminals for this thermostat, as well as for a timeclock The burner continues to operate until it is stopped by the timer or one of the thermostats.

2.3.6 When the room thermostats and/or timer intervene the burner shuts down The fan stops and the pump off via the pump overrun.

2.3.7 The condensate trap is fitted with a blockage safety sensor This prevents the boiler operating should there be a blockage in the condensate discharge trap.

2.3.8 An overheat cut off thermostat set slightly higher than the heat thermostat acts to turn off the burner to resetable "lockout" (Fig 50) .

SECTION 4 GENERAL REQUIREMENTS

4.0 SAFETY
Gas Safety (Installation and Use) Regulations.

It is law that all gas appliances are installed and serviced by a registered installer in accordance with the above regulations and these installation instructions. All registered installers carry a I.D. card and have a registration number. Both should be recorded in your boiler log book. You can check your installer by the gas safe register. Failure to install appliances correctly could lead to prosecution. It is in your own interest, and that of safety, to ensure the law is complied with. Check the boiler and flue is the correct type for installation. The installation of the boiler MUST be in accordance with the latest I.E.E. (BS 7671) Wiring Regulations, local building regulations, bye-laws of the local water authority, the building regulations and the Building Standards (Scotland) and any relevant requirements of the local authority. authority, the building regulations and the Building standards (Scotland) and any relevant requirements of the local authority.

4.1 GENERAL INFORMATION

Both the user and the manufacturer rely heavily on the installer, whose job it is to install the combination boiler and connect it to a correctly designed heating system Acquaint yourself with the British Standards concerning installation requirements If you need advice on any points your Ravenheat Technical Services Office would be pleased to help It is recommended that tools suitable

OVERALL DIMENSION

Fig.3

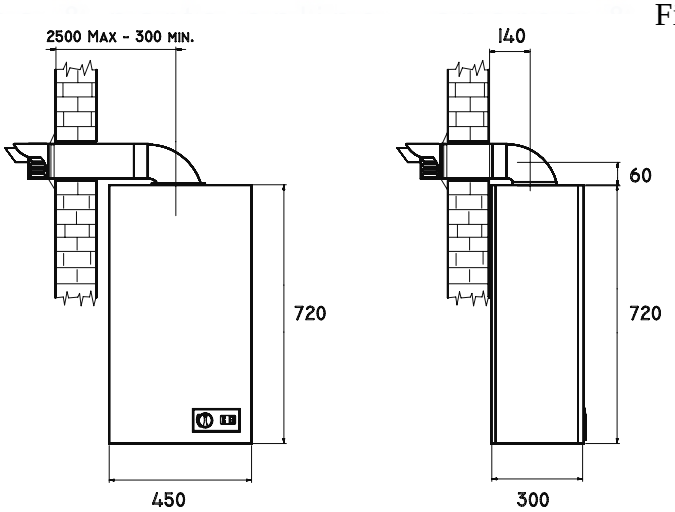

PRESSURE DROP ACROSS APPLIANCE

Fig.5

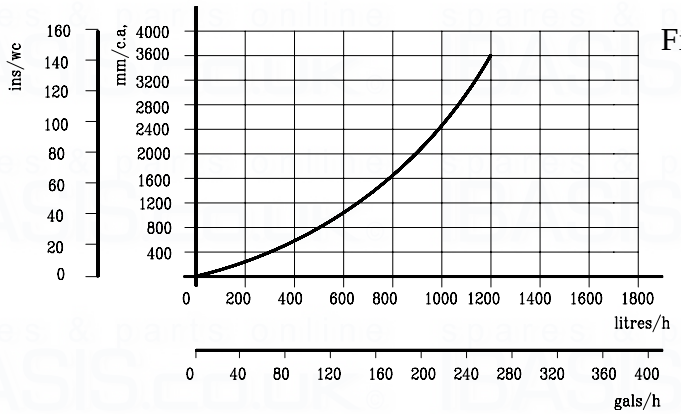

for brass fittings are used, and have a capability to accomodate hexagon sizes up to 50 mm.

CODES OF PRACTICE/Ref Documents

Detailed recommendations are contained in the following British Standard Codes of Practice.

BS 6891	Low pressure installation pipes
BS 6798	Installation of gas fired hot water boilers of rated input not exceeding 60 kW
BS 5449	Forced circulation hot water systems
BS 5546	Installation of gas hot water supplies domestic purposes (2nd Family Gases)
BS 5440 1	Flues (for gas appliances of rated input not exceeding 60 kW)
BS 5440:2	Ventilation (for gas appliances of rated input not exceeding 60 kW)

DD 189:1990 Discharge of condensate.

Health & Safety Document No. 635

The Electricity at Work Regulations1989.

The manufacturer's notes must NOT be taken, in any way, as overriding statutory obligations.

IMPORTANT These appliances are CE certificated for safety and performance It is, therefore, important that no external control devices e.g. flue dampers, economisers etc , are directly connected to this appliance unless covered by these. Installation and Service Instructions or as otherwise recommended by Ravenheat in writing If in doubt please enquire.

Any direct connection of a control device not approved by Ravenheat could invalidate the certification and the normal appliance warranty It could also infringe the Gas Safety regulations and the above regulations.

NOTE The Ravenheat CSI Primary boiler has been tested and examined by BG,and is certified to comply with PrEN 483 Manufacturers instructions must NOT be taken in any way as overriding statutory obligations.
If in doubt on any point please consult Ravenheat Manufacturing Ltd.

4.2 LOCATION OF BOILER

4.2.1 Siting of Ravenheat CSI Primary Boiler must be as follows The position of installation should be within the building, unless otherwise protected by suitable enclosure Adequate space for installation, servicing and air circulation around boiler must be allowed for.
The Ravenheat CSI Primary must be fitted on a flat and vertical wall capable of adequately supporting the weight of the boiler and any ancillary equipment
The appliance may be installed on a combustible wall subject to the requirements of the Local Authority and Building Regulations.

LPG versions of this appliance shall not be installed in cellars or basements.

4.3 CLEARANCES AROUND THE APPLIANCE

4.3.1 The following minimum free spaces, required for installation inspection and servicing, must be left around the boiler.

CSI PRIMARY AAA

TABLE 1

NATURAL GAS (G 20) I_{2H} - II_{2H3+}

NOMINAL HEAT INPUT NET QMS		22.6 kW
MINIMUM HEAT INPUT NET		11.6 kW
NOMINAL HEAT OUTPUT		22.3 kW
MINIMUN HEAT OUTPUT CONDENSING		23.9 kW
NOMINAL HEAT OUTPUT		11.4 kW
MINIMUM HEAT OUTPUT CONDENSING		12.3 kW
GAS RATE	Max	2.3 m^3/h
AFTER 10 MINUTES	min	1.2 m^3/h
INLET PRESSURE	20 mbar	
BURNER PRESSURE	max	10.5 mbar
	min	2.0 mbar
BURNER INJECTORS	Nr. 13 x 1.25	
ELECTRICAL SUPPLY	230V ~ 50 Hz	
POWER CONSUMPTION	60 W	
EXTERNAL FUSE RATING	3 A	
INTERNAL FUSE	2 A	
DRY WEIGHT	35 kg	
WATER CONTENT C H	0.5 litre	
GAS SUPPLY CONNECTION C H	15 mm	
FLOW CONNECTION C H	22 mm	
RETURN CONNECTION C H	22 mm	
CONDENSATION DRAIN	3/4” (21.5 mm) push fit over flow	
SEALED WATER SYSTEM C.H.		
MAX PRESSURE PMS		2.5 bar
MINIMUM WORKING PRESSURE		0.5 bar
CENTRAL HEATING OPERATING TEMPERATURE	MAX - 85 °C	min - Off
FLUE OUTLET NOM. DIAMETER 60/100 mm specially supplied with boilers		
DESTINATION : AT, DK, FI, SE	CATEGORY I_{2H}	
DESTINATION: GB, IE, CH, ES, IT, PT	CATEGORY II_{2H3+}	
FLUE TYPE: C_{12} - C_{32} - C_{52}	NOX 4	

CSI PRIMARY AAA

TABLE 1/A

LPG (G 30 - G 31) I_{3p} - II_{2H3+}

NOMINAL HEAT INPUT NET QMS			22.6 kW	
MINIMUM HEAT INPUT NET			11.6 kW	
NOMINAL HEAT OUTPUT			22.3 kW	
MINIMUN HEAT OUTPUT CONDENSING			23.9 kW	
NOMINAL HEAT OUTPUT			11.4 kW	
MINIMUM HEAT OUTPUT CONDENSING			12.3 kW	
GAS RATE	Max G31	0.9 m^3/h	G30	0.7 m^3/h
AFTER 10 MINUTES	min	0.4 m^3/h		0.3 m^3/h
INLET PRESSURE	G31	37 mbar	G 30	28-30 mbar
BURNER PRESSURE	Max G 31	35. 4 mbar	G 30	27. 3 mbar
	min	7. 3 mbar		7. 0 mbar
BURNER INJECTORS	Nr. 13 x 0.75			
ELECTRICAL SUPPLY	230V ~ 50 Hz			
POWER CONSUMPTION	60 W			
EXTERNAL FUSE RATING	3 A			
INTERNAL FUSE	2 A			
DRY WEIGHT	35 kg			
WATER CONTENT C H	0.5 litre			
GAS SUPPLY CONNECTION C H	15 mm			
FLOW CONNECTION C H	22 mm			
RETURN CONNECTION C H	22 mm			
CONDENSATION DRAIN	3/4” (21.5 mm) push fit over flow			
SEALED WATER SYSTEM C. H.				
MAX PRESSURE PMS			2. 5 bar	
MINIMUM WORKING PRESSURE			0. 5 bar	
CENTRAL HEATING OPERATING TEMPERATURE			MAX - 85 °C	min - Off
FLUE OUTLET NOM. DIAMETER 60/100 mm specially supplied with boilers				
DESTINATION :	BE, FR		CATEGORY I_{3p}	
DESTINATION :	GB, IE, CH, ES, IT, PT		CATEGORY II_{2H3+}	
FLUE TYPE : C_{12} - C_{32} - C_{52}			NOX 4	

18 inches (450 mm) in front
5 inches (125 mm) above
6 inches (150 mm) below
0 2 inches (5 mm) on each side
1 inch (25 mm) in front when installed in a cupboard

4.4 IMPORTANT NOTICE

4.4.1 If the boiler is to be fitted in a timber framed building it should be fitted in accordance with the British Gas Publication Guide for Gas Installations in Timber Frame Housing Reference DM2. If in doubt advice must be sought from the local gas supplier The boiler may be installed in any room or internal space, although particular attention is drawn to the requirements of the current I.E.E Wiring Regulations, and in Scotland the electrical provisions of the Building Regulations applicable in Scotland, with respect to the installation of the combination boiler in a room or internal space containing a bath or shower Where a room sealed appliance is installed in a room containing a bath or shower, any electrical switch or appliance control, utilising mains electricity should be so situated that it cannot be touched by a person using a bath or shower.
A compartment used to enclose the boiler MUST be designed and constructed specifically for this purpose an existing cupboard, or compartment, may be used provided it is modified accordingly. Samples of the CSI boiler have been examined by BG Technology Notified Body, and is certified to comply with the essential requirements of the Gas Appliance Directive 90/396/EEC, the Low Voltage Directive 72/23/EEC and shows compliance with the Electra Magnetic Compatibility Directive 89/336/EEC and are therefore permitted to carry the CE Mark .
The appliance has been tested and approved by the WRc as meeting the requirements of G3 and L of the Building regulations and water Bylaws Scheme- Approved Products.

4.5 GAS SUPPLY

4.5.1 A gas meter is connected to the service pipe by the Local Gas Region or the Local Gas Region contractor An existing meter should be checked preferably by the Gas Region to ensure that the meter is adequate to deal with the rate of gas supply required for all appliances it serves Installation pipes should be fitted in accordance with BS 6891 Pipework from the meter to the boiler must be of adequate size (22 mm) min To within at least 3 metre of the boiler (15 mm) min can then be used for remaining pipe work to the appliance.

A smaller size than the boiler inlet gas connection should not be used The complete installation must be tested for soundness as described in the above Code .
N B: if the gas supply for the boiler serves other appliances ensure an adequate supply is available both to the boiler and the other appliances when they are in use at the same time.

4.6 FLUE SYSTEM

4.4.1 The terminal should be located where dispersal of combustion products is not impeded and with due regard for the damage or discolouration that might occur to building products in the vicinity (see fig 6) The terminal must not be located in a place where it is likely to cause a nuisance In cold and/or humid weather water vapour may condense on leaving the flue terminal The effect of such steaming must be considered.
The terminal must not be closer than 25 mm (1 in) to any combustible material For protection of combustibles, refer to BS 5440.1.
Where a flue terminal is installed less than 1000 mm from a plastic, or painted gutter, or 500 mm from painted eaves, an aluminium shield 1000 mm long, should be fitted to the underside of the gutter or painted surface.

Pluming will occur at the terminal so, where possible, terminal positions which could cause a nuisance should be avoided The flue must be installed in accordance with the recommendations of BS 5440.Part 1.

IMPORTANT NOTES

For greater flue lengths see twin flue Instructions.
Flue must be positioned in a place not likely to cause a nuisance.

IMPORTANT: The following notes are intended for general guidance.

The boiler MUST be installed so that the terminal is exposed to external air.

It is important that the position of the terminal allows the free passage of air across it at all times.

Minimum acceptable spacing from the terminal to obstructions and ventilation opening are specified in Fig.6.

Note positions: *Due to the terminal design, installation is possible with clearances less than those specified in BS 5440, Part .1.*

NOTE The flue must be terminated in a place not likely to cause a nuisance.

4.6.2 A concentric vertical flue kit is available, for flueing applications up to a maximun height of 40 metres.
For further details see vertical flue installation instructions.

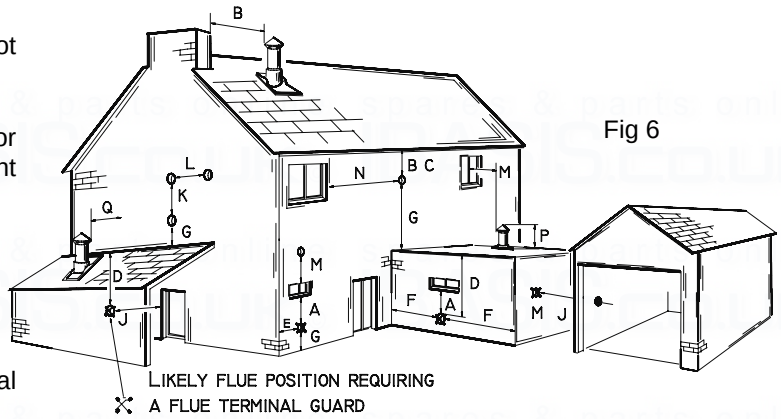

Fig 6

4.7 AIR SUPPLY

4.7.1 The following notes are intended for general guidance.
The room sealed fan flued boiler does not re quire a permanent air vent for combustion air supply.
Where installed in a cupboard or compartment ventilation is not required.

Terminal position for fan assisted boiler
(minimum distance) mm

A-	Directly below an open window or other opening (e.g. air brick)	300
B -	Below gutters, soil pipes or drain pipes	75
C -	Below eaves	150
D -	Below balconies or car port roof	200
E -	From vertical drain pipes and soil pipes	150
F -	From internal or external corners	300
G -	Above ground or below balcony level	300
H -	From a surface facing a terminal	600
I -	From a terminal facing a terminal	1200
J -	From an opening in the car port (e.g. door window) into dwelling.	1200
K -	Vertically from a terminal on the same wall	1500
L -	Horizontally from a terminal on the same wall	300
M -	From adjacent wall to flue	300

CONDENSATE DRAIN

A condensate drain is provided on the boiler and a 25 mm plastic overflow pipe is fitted on the condensing trap and should be used to fit on the drain connection, if required, to discharge condensate to a drain. The drain pipe should have a fall of a least 2.5° away from the boiler. Condensate should, if possible be discharged into the household internal drainage system.
If this is not practicable, discharge can be allowed into the external household drains or a purpose designed soak away.
It is recommended that any external condensate drain pipe is insulated and also preferably of 32 mm diameter, to prevent freezing in adverse weather conditions.
The condensate is discharged periodically in " slugs" by siphonic action. It is not necessary to provide air breaks or extra traps in the discharge pipe as there is already a 125mm high trap inside the boiler. Fitting an extra trap may cause the boiler siphon to work incorrectly.
Refer to BS5546 or BS6798 for advice on disposal of boiler condensate.

4.8.2 Pipework
Copper tubing to BS 2871 1.1.1971 is recmended for water pipes Jointing should be either with capillary soldered or with compression fittings.
Where possible pipes should have a gradient to ensure air is carried naturally to air release points and water flows naturally to drain taps,
It should be ensured as far as possible that the appliance heat exchanger is not a natural collecting point for air.
Except where providing useful heat, pipes should be insulated to prevent heat loss and to avoid freezing Particular attention should be paid to pipes passing through ventilated spaces in roofs and under floors.

4.8 WATER CIRCULATION (central heatin~\

4.81 Detailed recommendations are given in 6798:1897/ 5449 : 1990 (for smallbore and microbore central heating systems)
The following notes are given for genera guidance.

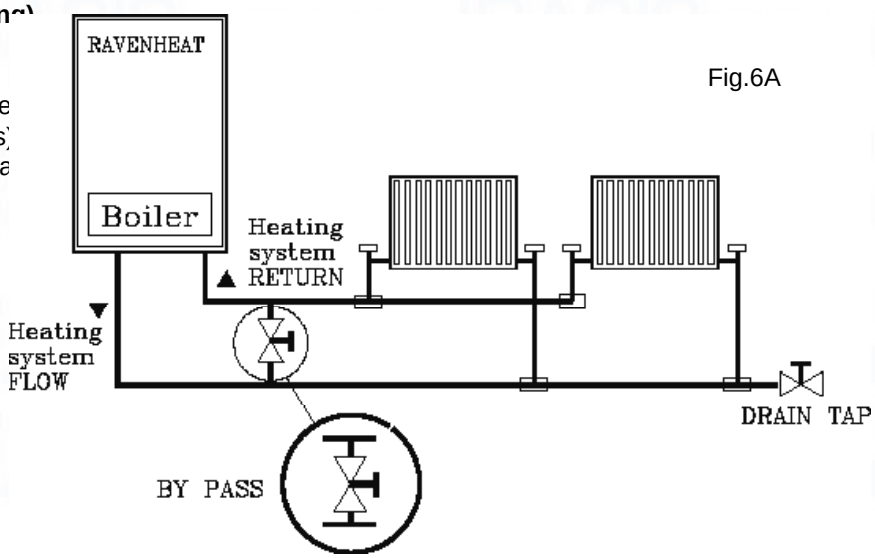

Fig.6A

WATER SYSTEM

4.8.2.1 WATER SYSTEM

For an open (vented) system the boiler must be supplied from an unrestricted water supply taken from a feed and expasion tank (minimum 22 litre 5 gall) capacity situated at a maximum height of 27 5 metre (90ft) above the boiler The cold feed supply must be 15 mm minimum size It is important that the relative positions of the pump, cold feed and open vent See Fig 6D.

4.8.2.2 CILINDER

The hot water cylinder must be a double feed (fully indirect) type.

4.8.2.3 SEALED WATER SYSTEMS

The installation should comply with the appropriate requirements of BS5449 Part 1 and BS6798, see Fig 6E All valves and fittings must be suitable for use on sealed systems

4.8.2.4 SAFETY VALVE

The safety valve must be fitted in a sealed system The safety valve must conform to BS6759 Part 1 and be fitted to the requirements of BS6798

4.8.2.5 EXPANSION VESSEL

A diaphragm type expansion vessel, conforming to BS4814 must be connected at a point close to the inlet side of the circulating pump, see Fig 6E or as laid down by the manufacturer.

The expansion vessel must suit the volume of water in the system, see BS5449 Part 1 clause 25 for details .The charge pressure must not be less than static head i e the height of the highest point of the system ABOVE the expansion vessel .

The expansion vessel should have sufficient capacity to accept the volume change when the water is heated from 10 °C to 110 °C Refer to BS5449 Part 1 for specific details See Table 3.

4.8.2.6 PRESSURE GAUGE

A pressure gauge with set pointer and covering at least the range 0 to 4 bar (0 to 60 lb/in^2) shall be permanently fitted to the system in a position it can be seen when carrying out the filling operation.

4.8.2.7 SYSTEM DESIGN

Fig 6A illustrates typical heating only layout Figs 6B and 6C illustrate typical layout with 'Y' or 'S' plan system.

4.8.3 The water through the appliance heat exchanger circuit must exceed the min 1.84 gals min (503 lt/h) when the burner is firing It is important to ensure that this rate is achieved when sections of the system are shut off either manually or be automatic.

Fig 6B

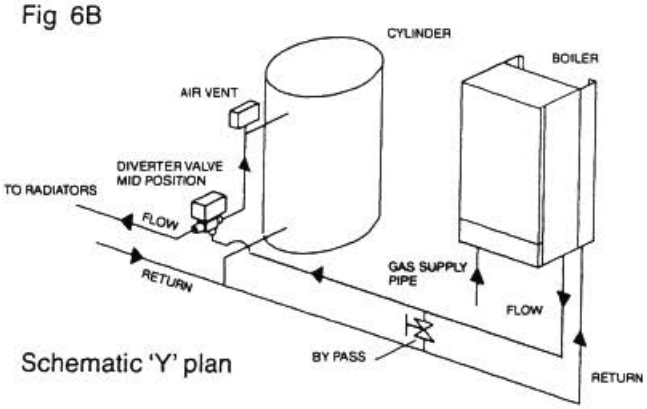

Schematic 'Y' plan

Fig 6C

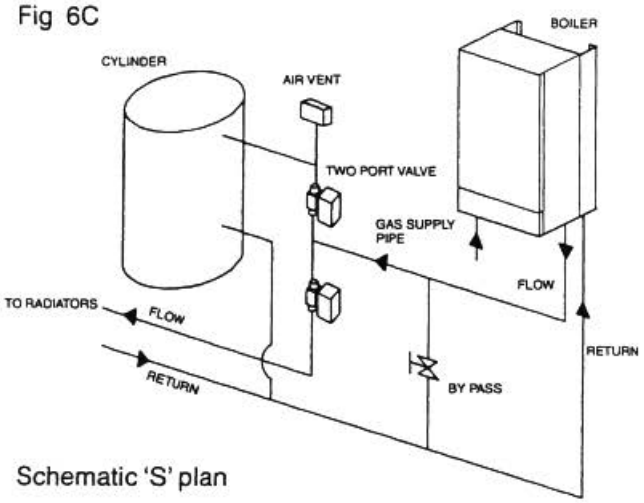

Schematic 'S' plan

Fig 6D

Open (vented) system pipework requirements

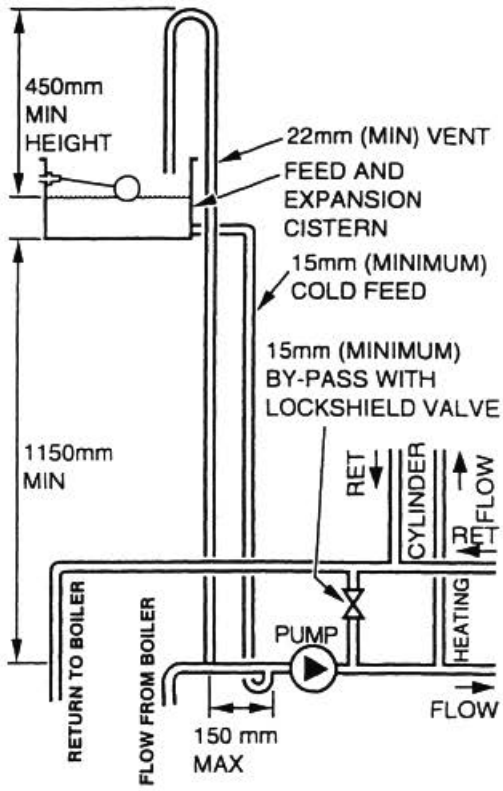

Fig 6E

Sealed water system diagrammatic layout

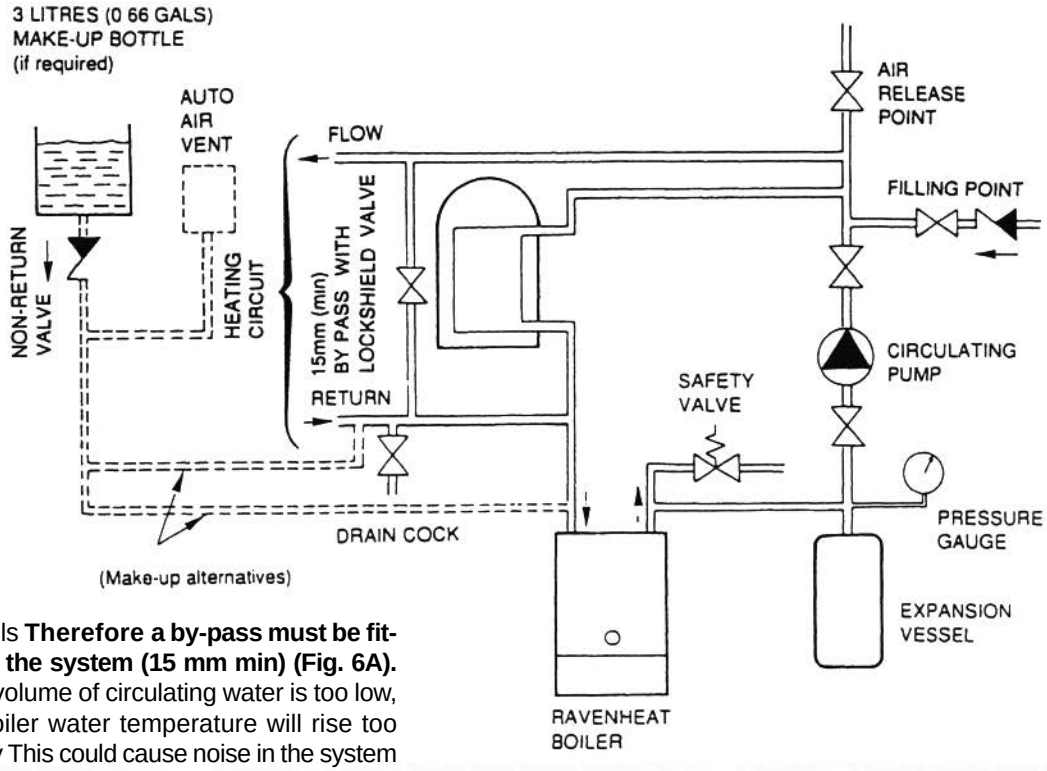

controls **Therefore a by-pass must be fitted to the system (15 mm min) (Fig. 6A).** If the volume of circulating water is too low, the boiler water temperature will rise too rapidly This could cause noise in the system or evene cause the safety thermostat to trip

4.8.4. Draining tap

These must be located in accessible positions to permit the draining of the whole system The taps must be at least 15 mm nominal size and manufactured in accordance with BS 2870 1980.

4.8.5 Air release points

These must be fitted at all high points where air will naturally collect, and must be sited to facilitate complete fitting of the system.

4.8.7 Mains water feed: central heating

There must be no direct connection to the mains water supply, even through a non-return valve, without the approval of the Local Water Authority.

4.8.8 Permissible methods of filling

Cistern method (Fig 8)

The system may be filled by one of the following methods Through a cistern used for no other purpose, via a ball valve permanently connected directly to a service pipe and/or cold water distributing pipe.

The static head available from the cistern should be adequate to provide the initial system design pressure. The cold feed pipe from the cistern should include a non-return valve, and a stop-valve with an automatic air vent connected between them, with the stop valve being located, between the cistern and the automatic air vent The stop valve may remain open during normal operation of the system, if automatic water make-up is required Booster pump method (Fig 8).

Fig 8

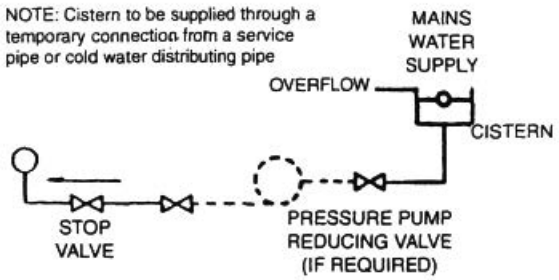

Fig 9

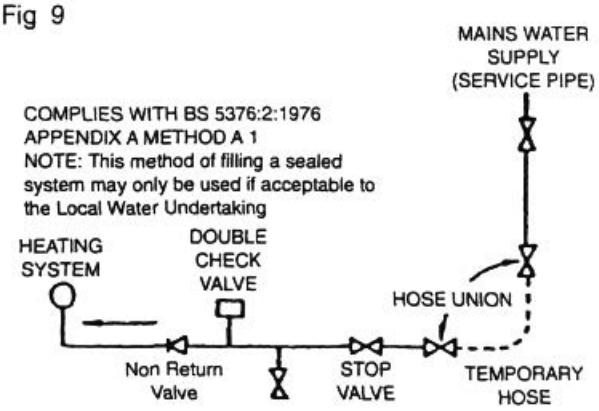

Fig 7

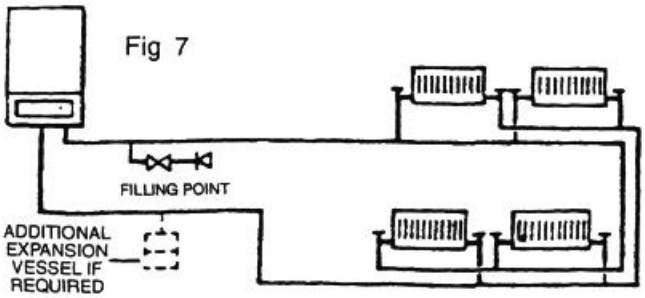

SIZING OF EXPANSION VESSEL TABLE 3

Safety valve setting (bar)	30								
Vessel charge pressure (bar)	05				10			15	
Initial system pressure (bar)	05	10	15	20	10	15	20	15	20
Total water content of system	EXPANSION VESSEL VOLUME (LITRES)								
Litres									
25	21	35	65	137	27	47	103	39	83
50	42	70	129	275	54	95	206	78	165
75	63	105	194	413	82	142	309	117	248
100	83	140	259	551	109	190	412	156	331
125	104	175	324	689	136	237	515	195	413
150	125	210	388	826	163	285	618	234	496
175	146	245	453	964	191	332	721	273	579
200	167	280	518	1102	218	380	824	312	662
225	187	315	583	1240	245	427	927	351	745
250	208	350	647	1377	272	475	1030	390	827
275	229	385	712	1515	300	52.2	1133	429	910
300	250	420	777	1653	327	570	1236	468	993
325	270	455	841	1791	357	617	1339	507	1076
350	291	490	906	1928	381	665	1442	546	1158
375	312	525	971	2066	409	712	1545	585	1241
400	333	560	1036	2204	436	760	1648	624	1324
425	354	595	1101	2392	463	807	1751	663	1407
450	375	630	1165	2479	490	855	1854	702	1489
475	396	665	1230	2617	518	902	1957	741	1572
500	416	700	1259	2755	545	950	2060	780	1655
For system volumes other than those given above, multiply the system volume by the factor across	00833	0 140	0 259	0 551	0109	0 190	0412	0 156	0 331

Note: This pressure can be increased up to 1.5 bar to suit high static head situations, see item 10, other appliance components in the SERVICING INSTRUCTIONS

The system may be filled through a self contained unit comprising of a cistern pressure booster pump if required and if necessary an automatic pressure reducing valve or flow restrictor The cistern should be supplied through a temporary connection from a service pipe or cold water distributing pipe The unit may remain permanently connected to the heating system to provide limited automatic water make up.
Mains topping up method (Fig 9).
Here the temporary connection is supplied from a service pipe, or distributing pipe, which also supplies other draw-off points at a lower level.
A combined double check valve shall be installed upstream of the draw-off point, through a temporary hose connection from a tap supplied from the mains, where the mains pressure is excessive a pressure reducing valve shall be used to make filling easier The following fittings shall form a permanent part of the system and shall be fitted in the order stated.

a) A stop valve complying with the requirements of BS 1010 Part 2 (the temporary hose from the draw off tap shall be connected to this fitting).
b) A test clock.
c) Double check valve of an accepted type.
d) A non return valve of an accepted type.
We recommend use of a Ravenheat Filling Loop designed for this method of filling the system Available from your supplier.

PROVISIONS FOR MAKE UP WATER (Fig 7).

Provision can be made for replacing water loss from the system either
A) from a manually filled made up bottle with a readily visible water level The bottle should be mounted at least 150 mm (6 in) above the highest point of the system and be connected through a non return valve to the return side of the heating system
B) Where fitting a make up vessel would be difficult re pressurisation of the system can be done See section on FILLING
If the capacity of the central heating system

should exceed 110 litres, an additional vessel should be installed on the return to the combination boiler from the heating system (Fig 7) Guidance on vessel sizing is given in (Table 3).
Reference should be made to British Gas Publications «Material and Installation Specifications for Domestic Central Heating and Hot Water» Draining taps should be at least 1/2" in BSP nominal size and be in accordance with BS 2879.

4.8.9 Installation to an existing central heating system

Before installing a new boiler to an existing system, flush out the old system with a recommended descaling agent.
It is most important that the correct concentration of the water treatment product is maintained in accordance with the manufacturers' instructions .
If the boiler is installed in an existing system any unsuitable additives *MUST be* removed by thorough cleansing BS 7593 1992 details the steps necessary to clean domestic central heating system Also check pipework and renew any corroded pipework or fittings Valve glands must be repacked or replaced wherever necessary and any defective controls exchanged.

WATER TREATMENT

This boiler has a secondary ALUMINIUM alloy heat exchanger.
Ravenheat recommended *only* the use of FERNOX-COPAL SENTINEL X100 or SALAMANDER CURROSION GUARD water treatment products, which must be used in accordance with the manufacturers instructions For further information contact
Fernox Manufacturing Co Ltd
Tel 01799 550811
Sentinel Division Betz Dearborn Ltd
Tel (0151) 424 5351
Salamander (Eng)Ltd
Tel (0121) 3780952/4508

4.10 ELECTRICAL SUPPLY

Warning: this appliance must be earthed

4.10.1 External wiring to the appliance must be carried out by a competent person and be in accordance with the current I.E.E. Regulations and local regulations which apply The Ravenheat boiler is supplied for connection to a 230 V ~ 50 Hz single phase supply **The supply must be fused at 3 A.**

NOTE The method of connection to the electricity supply MUST facilitate complete electrical isolation of the appliance, by the use of a fused, double pole isolator, having a contact separation of at least 3 mm in all poles The point of connection to the electricity supply must be readily accessible and adjacent to the appliance except, where the appliance is installed in a bathroom, this MUST be sited outside the bathroom

SECTION 5 INSTALLATION

5.1 WARNING

5.1.1 It is MOST IMPORTANT that this appliance is installed in a VERTICAL POSITION, with the flue air duct passing through the wall **Make sure flue slopes 2.5° down towards the boiler that is 45 mm/m fall per metre of flue length.**

5.2 DELIVERY

5.2.1 The appliance carton containing (Fig.15).

a) boiler fully assembled
b) installation instructions and user instructions
c) white paper template
d) terminal cover plate

Polythene bag containing

a) 1-1/2” BSP Union Gas Cock
b) 2-22 mm flanged copper tails complete with 3/4” brass nuts and washers
c) 4 coach bolts and wall plugs screws and dowels.

Horizontal CSI flue kit carton containing (sold separate) (Fig 12).

57- Flue bend assembly
58- Header gasket
59- Rubber seal Ø 60
60- Air intake duct
61- Flue exhaust duct
62- Terminal
65- Pipe centering spring
66- Flue gas sample point
127-Terminal Cover Plate

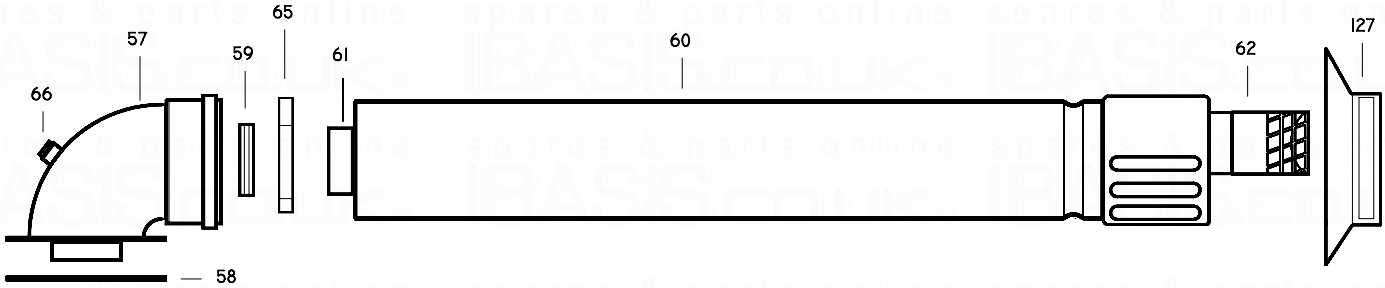

Fig.12

WARNING
Maximum allowable flue length 2.5 m
maximum No 2x1000 mm
Flue duct extension used with standard flue

OPTIONAL EXTRAS:

STRAIGHT HEADER Box containing (Fig 13) :

57 - Straight header
59 - Rubber seal Ø 60
66 - Flue gas sample point

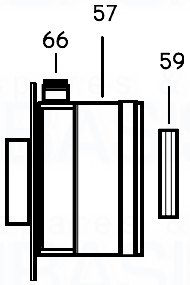

Fig.13

FLUE EXTENSION Box containing(Fig 14)
1000 mm flue extension duct as an extra cost only when requested for side and vertical flue applications

59 - Rubber seal Ø 60
63 - Air intake duct extension
64 - Flue exhaust duct extension
65 - Pipe centering spring

Fig.14

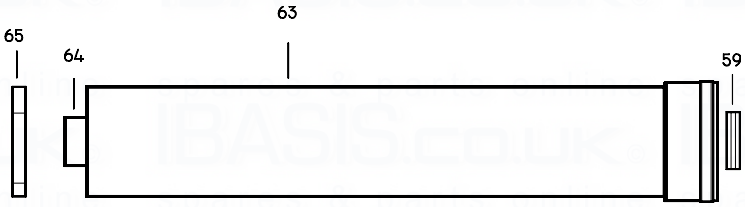

5.3 UNPACKING

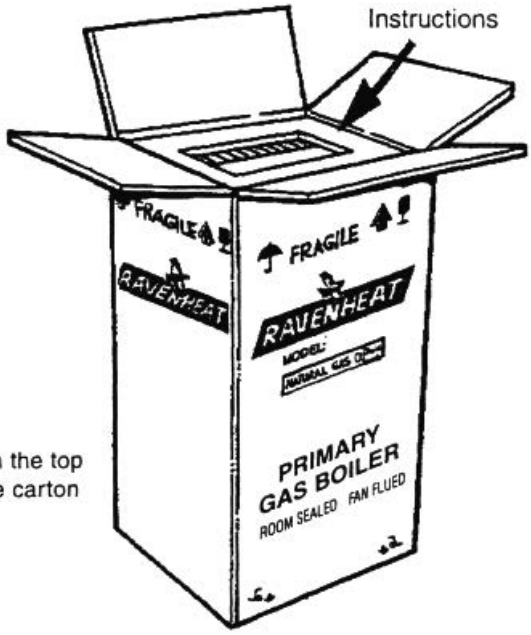

Fig 15

1) Open the top of the carton

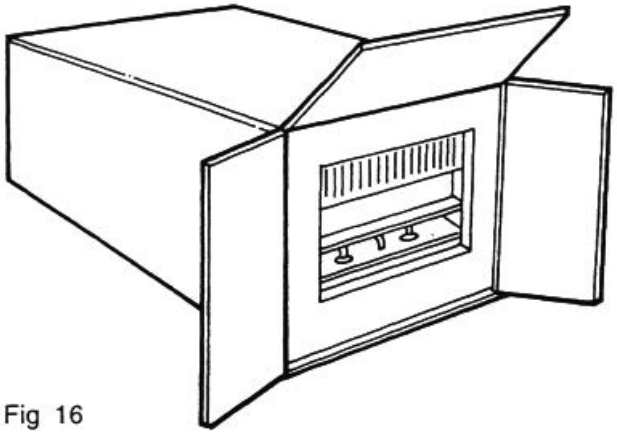

Fig 16

2) Rest the carton on the floor (keeping the flaps open)

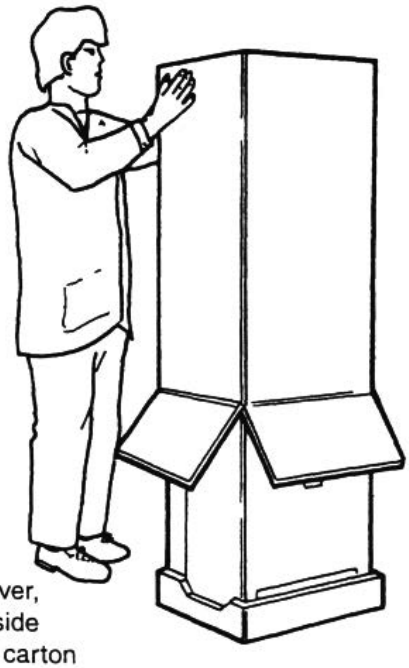

Fig 17

3) Turn the carton over, with the boiler inside and then pull the carton

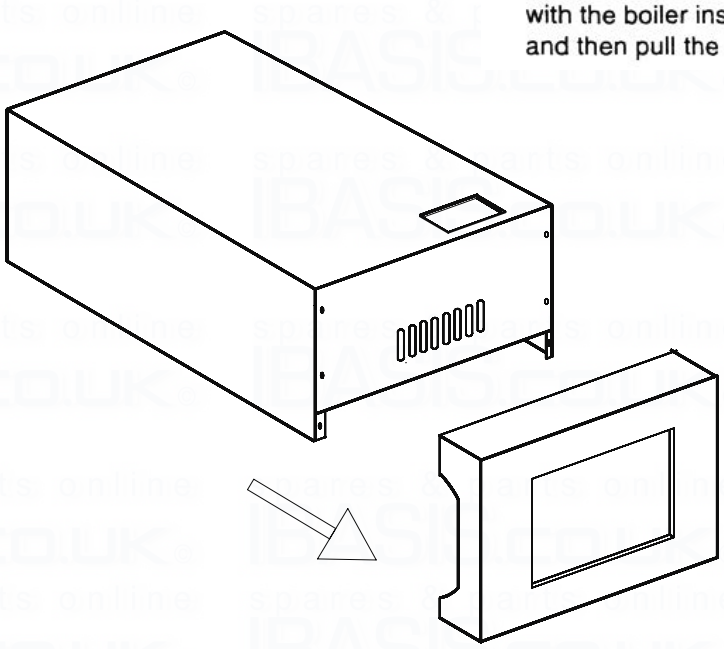

Fig. 18

5.4 POSITIONING OF THE BOILER

5.41 Remove the 4 screws that secure the upper and the lower part of the casing(Fig.19-20).

5.4.2 Unscrew the 4 screws that fasten the lower grating on the casing and remove it from the sides of the casing (Fig.20)

5.4.2.1 Carefully slide the casing forward to lift off. (Fig 21).

5.4.2.2 Make sure that the casing and screws are put to one side in a safe place.

5.4.3 Lifting instrument panel (not necessary for installation).

- Unscrew the 2 screws that fasten the instrument panel.
- Lift the instrument panel in order to detach it from the sides, and lift it up by rotating it on its own hinges.
  Make sure the casing screws are put to one side in a safe place.

Fig. 19

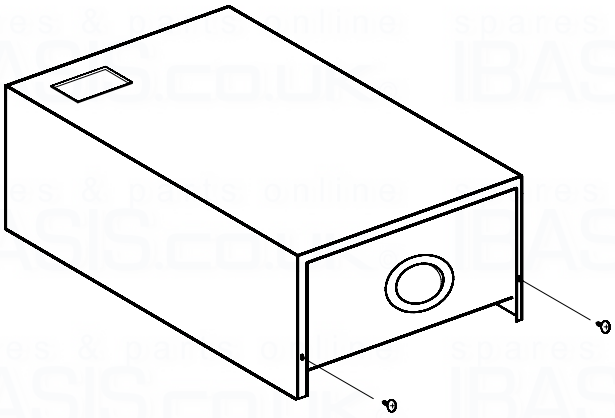

5.5 INSTALLING THE APPLIANCE FOR REAR FLUE OUTLET

5.5.1 Use adhesive tape to attach the template to the wall, making sure that the centre line is vertical

- Mark the four boiler fastening holes on the wall as well as the centre of the flue duct
- Detach the template from the wall.
- Use a 10 mm dia drill to make the 4 boiler securing holes Insert the plastic expansion plugs.
- Cut or core drill a 105 mm dia hole for inserting the flue duct
- Screw in the two upper coach bolts leaving them about 10 mm out from the wall to enable the boiler to be located on the wall .

Fit the elbow header positioning it towards the required direction (Fig 30).

IMPORTANT: Make sure that the elbow's dia 60 mm duct is inserted into the fan, the rubber seal and orifice (F2) have been correctly fitted.

Fig. 20

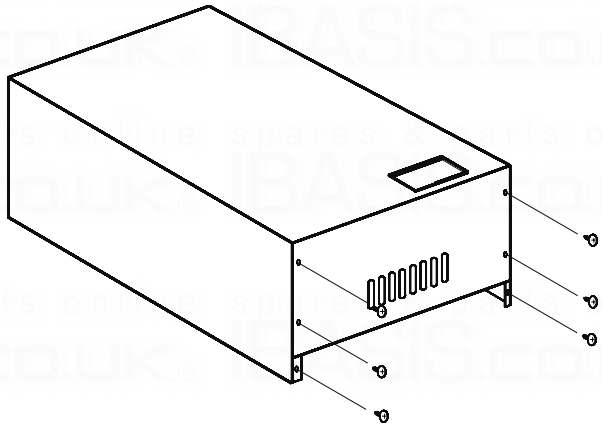

Fig. 21

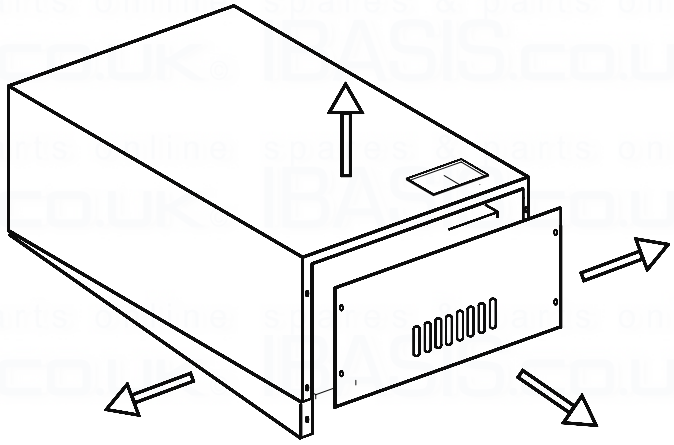

Fig. 28

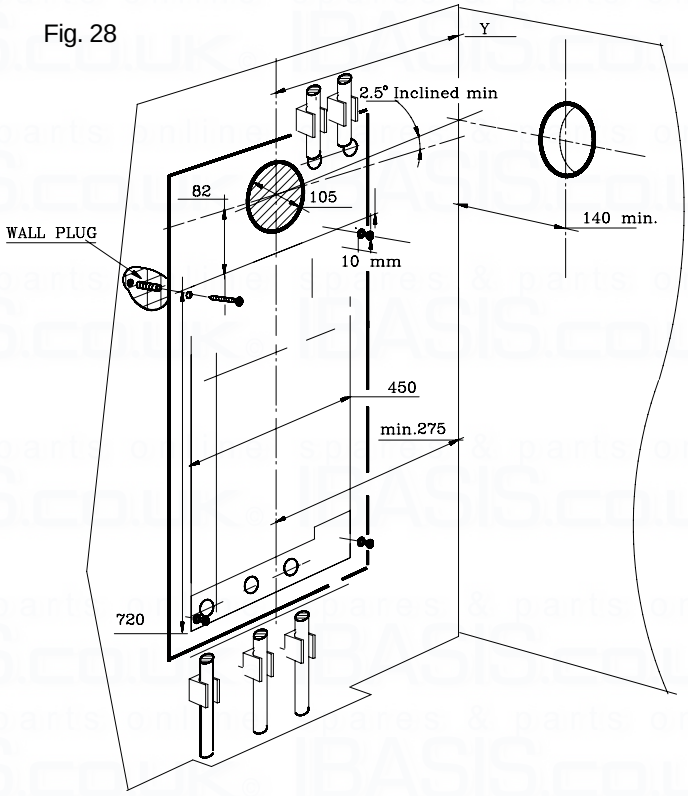

5.5.2 Locate the rubber Ø 100 and Ø 60 into the flue elbow header (Fig 30).

IMPORTANT

CORRECT FLUE MUST BE USED .
Check Spigot Distance (approx 35mm)
on STARTER HEADER.
Ensure Flue is fitted together correctly, supported and firmly secured . (Fig.29).

Fig. 29

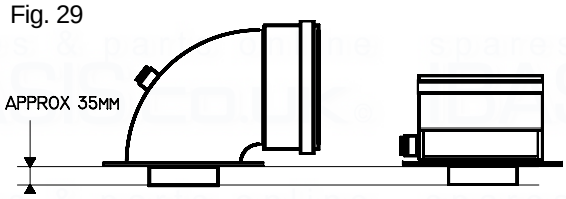

Fig. 30

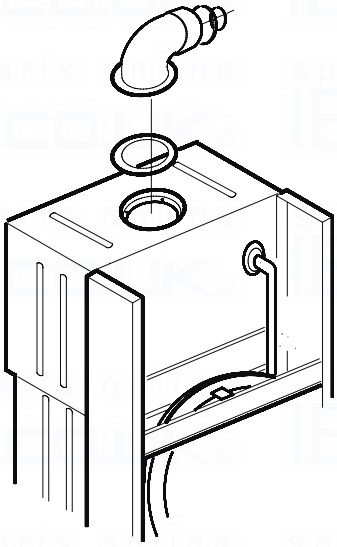

- Cut the inner flue duct (60 mm) at right.
- Angles to a length equal to W + 264 mm Insert from cut end Reassemble the two tubes Insert centering spring 65 Must be de-burred.
- Reassemble together inner and outer flue duct insert centering spring.

Fig. 32

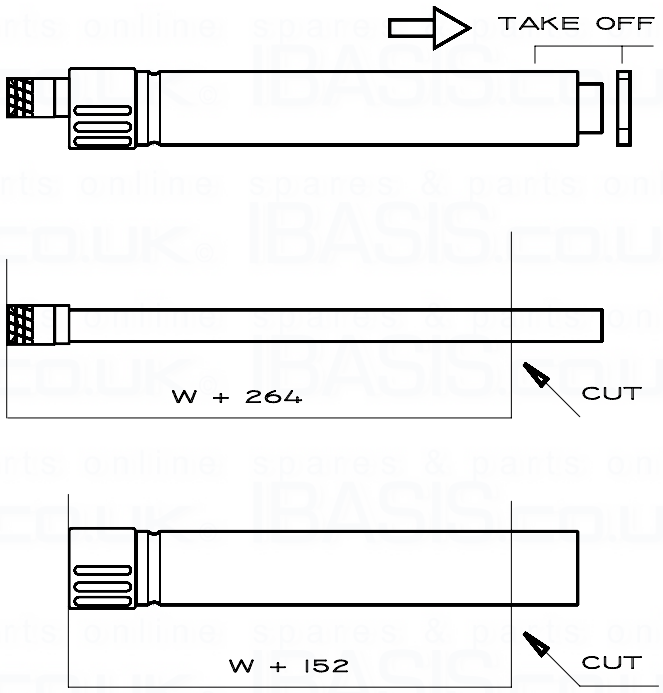

INTAKE AND EXHAUST TERMINAL COMPONENTS

Fig. 31

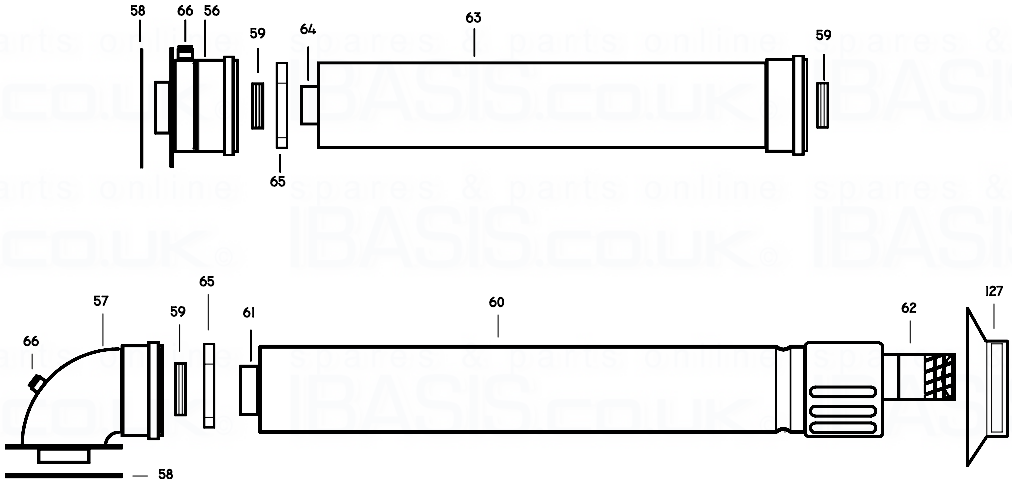

KEY

56 - Straight header
57 - Elbow header
58 - Header gasket
59 - Rubber seal Ø 60
60 - STD air intake duct
61 - STD flue exhaust duct
62 -Terminal
63 - air intake duct extension
64 - Flue exhaust duct extension
65 - Pipe centering spring
66 - Sample point
127 - Terminal cover plate

5.5.3 If the standard duct furnished with the boiler is too long (the wall to go through is less than 680 mm thick) it can be shortened as follows
- Remove the centering spring 65, the flue terminal to disengage inner flue duct.
- Measure the thickness W of the wall.
- Cut the outer flue duct at right angles to a length equal to W + 152 mm.
  Must be de-burred.

5.5.4 Insert the flue assembly into the wall, being careful to make sure that the outer air duct comes flush to the inner surface of the wall.

5.5.5 Lift the boiler on to the wall (Fig 34), locating onto the top coach bolts Fit the two lower coach bolts and tighten all four securing bolts.

5.5.6 Working above the boiler pull the flue exhaust duct towards the boiler in order to engage tube item 61 into its header 57 (Fig.31).
Position flue into elbow header and push so as to locate inner and outer flue correctly ensuring good seal is made with o-rings.

5.5.7 Fit terminal cover plate and terminal guard. (Fig.37).

5.5.8 Extension kits are available on order for flue extension of up to 2.5 metres total length (Fig.31).

Fig.35

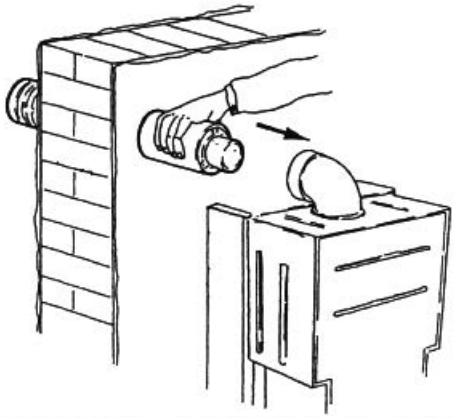

Fig 36

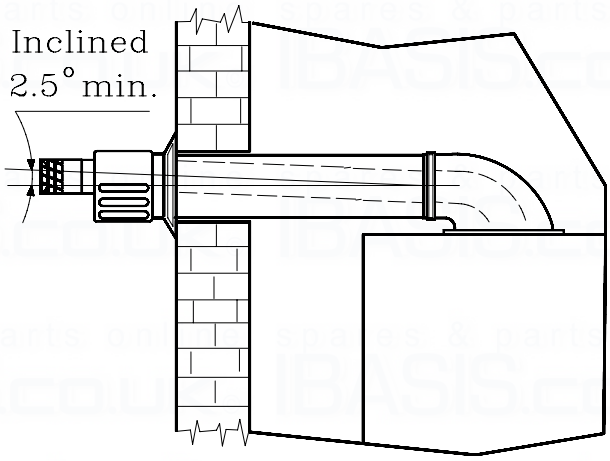

Fig 37

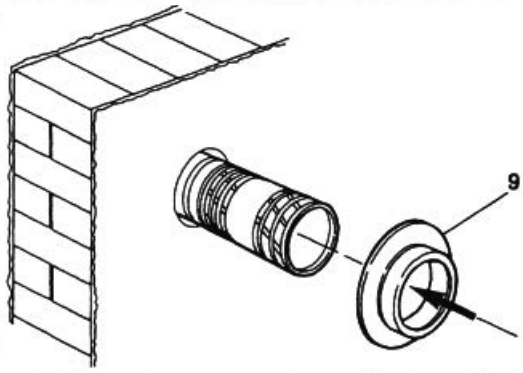

5.5.9 Each extension length extends the pipe by approximately 1000 mm long up to a maximum of two extensions.
Pipeline length can be established using the instructions in section 5.5 for rear flue outlets and section 5.7 for side flue outlets. Extensions must be installed with the widened end of the air intake pipe and the tapered end of the flue pipe aimed towards the exhaust terminal. Extensions must be joined together with the standard terminal pipe, and inserted in each other as far as they can go.
If an extension must be shortened, this must be done from the straight end, and not from the widened or tapered end .To measure the pipeline properly all components must be assembled and total length measured before cutting. The straight end of the extension connects to the boiler. The flue output pipe fits into the boiler header until it stops .The air intake pipe should be located approximately 2 mm from the boiler header (Fig 31).
When cutting both inner and outer ducts of the extension, always ensure that the reduced end (male) of the inner duct is longer than the outer duct.
All joints must be sealed with the rubber seals supplied.
It is important to put the centering spacer, supplied with the unit, inside between the two pipes, from the side opposite the extension's straight end.

NOTE: A suitable support bracket is available from Ravenheat Manufacturing and should be used to support flue length at least every 1.8 metre preferably at each joint this bracket should be secured to wall and flue duct.

5.5.10 INLINE FLUE BEND
Measure the distance between the flue bends or the flue/terminal assembly. The measurements should be taken from the outer edge of the flue and bend(Fig.39). **IMPORTANT: Inline flue bend - 1680 mm must be deducted from overall length for each 90° bend - 1680 mm must be deducted from overall length for each 135° bend (Fig 39).**

5.6 COMPLETING BOILER INSTALLATION

5.6.1 Reassemble the outer casing (sect 5 4) proceeding in this order
1) Fit the two sides
2) Refit the instrument panel in reverse order as in sect. 5.4.3.
3) Refit the lower grating .

5.7 INSTALLING THE APPLIANCE FOR SIDE FLUE OUTLET (Fig. 28)

5.7.1
- Attach the template to the wall with adhesive tape, making sure that the centre line is vertical and that the distance from the centre line to the nearest side wall is not less than measurement in table 6.
- Mark the four boiler securing holes on the wall and extend the axis of the flue duct hole to the side wall ensuring it is horizontal.
- Trace the centre of the flue duct hole measure distance F (table 6) From the corner of the wall (Fig. 28), measure the distance Y between the centre of flue duct hole to the corner Detach the template from wall.
- Use a dia 10 mm drill to make the 4 holes for securing the boiler Insert the plastic expansion plugs Core drill a 105 mm dia hole in the side wall for inserting the flue duct.

TABLE 6

CSI PRIMARY
F = 140 mm G = 275 mm

IN LINE FLUE BEND AND FLUE EXTENSION

Fig.39

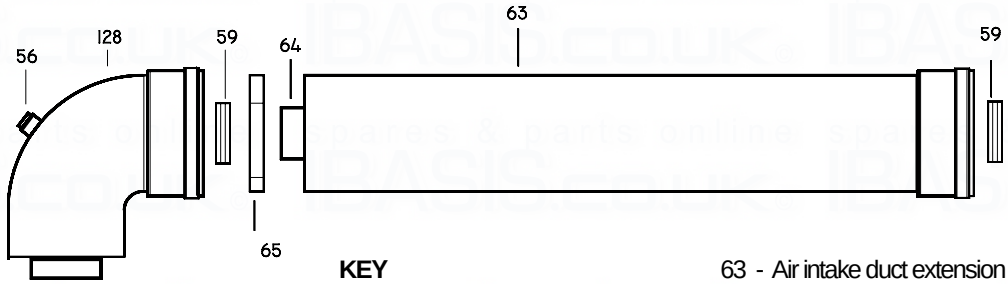

KEY

56 - Sample point
57 - Elbow Header
59 - Rubber seal Ø 60mm
63 - Air intake duct extension
64 - Flue Exhaust duct extension
65 - Pipe centering spring
128 - In Line Bend

5.7.2 Positioning the elbow towards the required direction (Fig 30).

5.7.3 Locate the rubber Ø 60 into the elbow. (Fig 30) .

5.7.4
- If the standard duct furnished with the boiler is too long (position of the boiler from the wall to go through as illustrated in the drawing and wall thicknesses less than what was specified above) it can be shortened as follows (Fig 28-29-31-32). Cut or core drill a 105 mm dia hole for inserting the flue duct.
- Remove the centering spring 65 (Fig39), pull the flue terminal disengage inner flue duct.
- Measure the thickness **W** of the wall
- Cut the outer air duct (100 mm dia) at right angles and to a length equal to **W +Y - 47 mm** (Fig. 32).
- Cut the inner flue duct (dia 60 mm) at right angles and to a length equal to **W +Y + 65 mm .**
- Outer air duct and inner flue duct must be de-burred.
- Reassemble the two tubes, insert centering spring 65. (Fig.39).

5.7.5 Insert the flue assembly into the wall, making sure it will not interfere when fixing the boiler on the wall.

5.7.6 Lift the boiler on the wall. Locate onto the top coach bolts.Fit the lower coach bolts and tighten all four securing bolts.

5.7.7 Working above the boiler pull the flue duct towards the elbow in order to engage tube into its header (Fig.35). Position flue into straight header and push so as to locate inner and outer flue correctly. Ensuring good seal is made with o rings.

5.7.8 **IMPORTANT:** Terminal rubber must be fitted (Fig 36-37).

5.7.9 Extension kits are available on order for flue extension of up to 2.5 metres total length (Fig.31) For further details see sect. 5.5.9.

5.7.10 VERTICAL FLUE INSTRUCTIONS ONLY

Fig.40

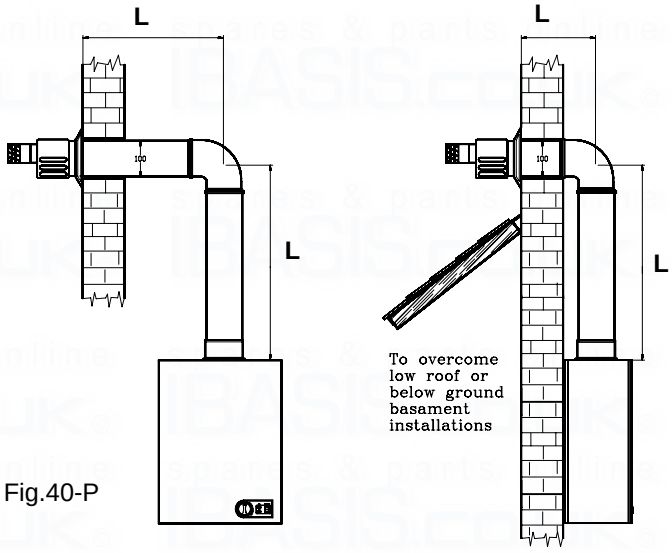

L+ L = 3.25m MAX

Fig.40-P

Fig.40-M

INLINE FLUE BEND **- 1680 mm** MUST BE DEDUCTED FROM OVERALL LENGTH FOR EACH 90° BEND OBTUSE FLUE BEND - **1680mm** MUST BE DEDUCTED FROM OVERALL LENGTH FOR EACH 135° BEND

The vertical flue kit is intended for use where a horizontal flue outlet is not possible or desired The vertical flue can be used either with a flat roof or a pitched roof (maximum pitch 60°) Where a straight vertical flue is not possible or desired, an offset vertical flue can be used in conjunction with a side horizontal flue extension piece and an inline 135°/90° flue bend (Fig 41).

IMPORTANT NOTES
For greater flue lengths see twin flue leaflet

Fig 41

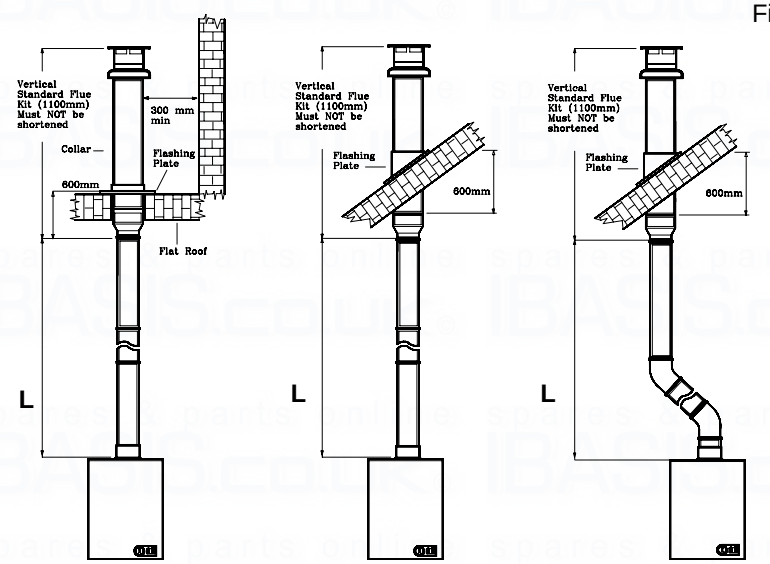

L = 3.0m MAX plus Vertical Flue kit

L = 3.0m MAX plus Vertical Flue kit

L = 2.25m MAX (2 in line 45° bend Max) plus Vertical Flue kit

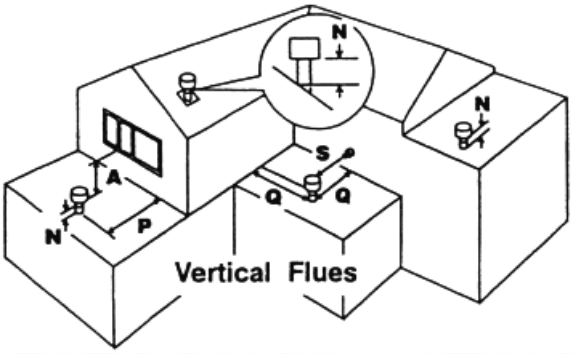

Fig 42

POSITION	MIN DISTANCE mm
N above roof level (to base of terminal)	300
P from adjacent wall to flue	300
Q from internal corner to flue	300
S from facing terminal	1,200
M horizontally from a vertical terminal to a wall	300

Before proceeding with installation check the contents of the RAVENHEAT VERTICAL FLUE KIT, comprising of the following pieces:

- 1 RAVENHEAT VERTICAL FLUE complete with terminal assembly (for vertical flue application).
- Additional 1000 mm (approx) . Flue Extension pieces as necessary, each extension is provided with inlet and outlet sealing rings and flue centering bracket
- One box containing straight header with inlet and outlet sealing rings.

Proceed with installation as detailed in section 5 up to 5.4. 8 , of the main Installation and Servicing Instruction, ignoring all references to horizontal flue installations.

Use adhesive tape to attach the template to the wall, making sure that the centre line is vertical and that the flue centre line is virtually below the point at which the flue will exit the roof.

- Ensure that the maximum permissible flue length is not exceeded (Fig .42).
- Mark the four boiler fastening holes on the wall.
- Detach the template from the wall.
- Use a 10 mm dia drill to make the 4 boiler securing holes.Insert plastic expansion plugs (Fig 29).
- Screw in the two upper coach bolts leaving them about 10 mm out from the wall to enable the boiler to be located on the wall.
- Position the straight header on the top of the appliance (Fig 43) Item 6, and ensure that the gasket and sealing rings are cor rectly fitted.

IMPORTANT: Make sure that the flue header dia 60 mm duct is inserted fully into the fan spigot.

Model	Model no of flue extensions	Overall max flue length	Distance to centre of flue from back wall
CSI PRIMARY	3	4 metre	200 mm

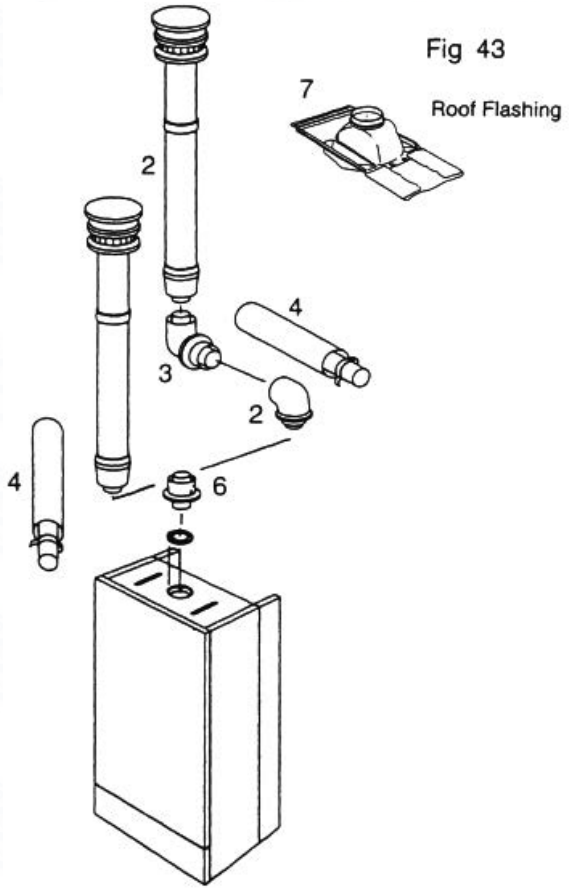

Cut a 105 mm diameter hole through the ceiling and/ or roof, at the point previously marked.

Fit a roof flashing sleeve (Fig. 43) to the roof, available from Ravenheat Manufacturing.

Insert the Vertical Flue terminal assembly through the flashing plate from the outside.

Fix the appliance to the wall, locating onto the top coach bolts Fit the two lower coach bolts and tighten all four securing bolts.

Measure the vertical distance between the top of the flue (Fig.42) and the bottom of the flue terminal assembly (Fig.41).
The measurements should be taken from the outer diameter of the flue.

NOTE: Where this length does not match any standard combination of the extensions, extension can be cut to the required length (Fig.44).
When cutting both inner and outer ducts of the extension, always cut on spigot side, and they must be de-burred.

Fig 44

FLUE EXTENSION

Starting at the appliance end, assemble the extension duct sections, making each inner and outer (flue) joint by inserting the spigot end into the socket end of the next tube, making sure the seal rings are correctly located (Fig 44). Make sure that the entire flue is adequately supported. Use at least one bracket for each extension used.
Ensure that all inner flue connections have a good fit/ seal, and that the space clips in each extension are correctly positioned.

5.8 REASSEMBLE BOILER AS PER (sect. 5.6.1)

5.8.1 Fitting valve pack

Remove plastic caps from boiler connection and fit flanged copper tail and valves as per using washers provided.

5.9 GAS CONNECTION

5.9.1 A minimum working gas pressure of 20 mbar must be available at the boiler inlet at full flow rate (37 mbar for propane, 29 mbar for butane).

5.9.2 Fit gas service cock to the boiler via the union nut and connect gas pipe.
Do not overtighten and use another spanner as a counter force to avoid straining internal connections.
Important consult (sect 4.5.1).

5.10 CENTRAL HEATING CONNECTION

5.10.1 Before any central heating connections are made to the boiler all system valves should be opened and the system thoroughly flshed out with cold water.

- Connect the central heating return pipe marked C.H.R
- Connect the central heating flow pipe marked C.H.F
- Pipe dimensions and positions are marked on template supplied.

5.13 ELECTRICAL CONNECTIONS

5.13.1 **IMPORTANT:** Electricity supply must be as specified in clause (sect. 4.10).

- When controls external to the appliance are required, design of the external electrical circuits should be undertaken by a competent person In accordance with the IEE wiring regulations. Factory fitted internal wiring must not be disturbed when wiring external controls.
- To gain access to the electrical box remove the front panel of the case as described in clauses (sect.5.4.1) and the instrument panel as described in clauses (sect. 5 .4 .3).
- The terminals are easily visible on the front of the electronic control board (Fig. 48).
- Heat resistant flexible cable is fitted between the isolator and the terminal block A 3 core cable of 0.75 mm^2 (24x0.2 mm) to BS 6500.

  Make sure all wires to the appliance are routed away from sharp edges and hot surfaces .

  The cable must be fastened with its cord anchorage and connected so that should the cable slip from the anchorage the current carrying conductors become taut before the earthing conductor .

  Securely tighten all terminal screws and arrange the cable with slack between the cord anchorage and the terminal block.

  WARNING: If the supply cord is damaged, it must be replaced by a service engineer (supply cord available from Ravenheat Manufacturing Ltd).

5.13.2 To gain access to the electrical connection remove the front panel of the case as described in clauses (sect. 5.4.1) .
Unscrew the 2 screws that fasten the instrument panel .
Lift the instrument panel in order to detach it from the sides, and lower it down by rotating it on its own hinges . The terminal box is easily visible on the front of the control panel Pull the electrical cover off to expose connection (Fig. 48).

5.13.3 Heat resistant flexible cable is fitted between the isolator and the terminal block. A 3 core cable of 0.75 mm (24 x 0.2 mm) to BS6500.

Make sure all wires to the appliance are routed away from the sharp edges and hot surfaces.The cable must be fastened with its cord anchorage and connected so that should the cable slip from the anchorage the current carrying conductors become taut before the earthing conductor. Securely tighten all terminal screws and arrange the cable with slack between the cord anchorage and the terminal block.

5.13.4 The pump must be connected directly to the boiler terminal's marked pump supply (Fig 94) **Any external controls must not interrupt this electrical connection.**

5.13.5 To fit timer/programmer remove white link wire ,**can be Free Volts or 230 Volts** (Fig.95 - 95.1 - 96 - 97).

5.13.6 Check the electrical installation for earth continuity, short circuits, resistance to earth, correct polarity and fuse failure.
WARNING: if supply cord is damaged it must be replaced by a service engineer (supply cord available from Ravenheat Manufecturing Ltd).

SECTION 6 COMMISSIONING

6.1 Each boiler has been through a rigorous operational procedure at our factory and should not require any further adjustment. If in the unlikely event of the appliance not operating correctly, please turn to the Fault Finding and Logic Sequence charts.

6.2 GAS SUPPLY INSTALLATION

6.2.1 Inspect the entire installation including the gas meter, test for soundness and purge, all as described in BS 6891.

6.3 ELECTRICAL INSTALLATION

Preliminary electrical systems checks to ensure electrical safety shall be carried out by a competent person (earth continuity, polarity, resistance to earth). Those checks are outlined in the «Instructions for British Gas Multimeter» Booklet.

If a fault has occurred on the appliance the fault finding procedure should be followed as specified under the servicing section of this document.

6.4 INITIAL FILLING OF THE SYSTEM

- Gradually fill the heating system until water is heard to flow.
- Starting with the lowest radiator open each air release tap in turn. Close it only when clear water, free of bubbles, flows out In the same way release air from any high points in the pipework.
- Inspect the system for water soundness and remedy any leaks discovered.

6.5 SETTING THE SYSTEM DESIGN PRESSURE

6.5.1 The design pressure must be a min 1 bar and max 1.5 bar These figures are read off the pressure gauge.

- The actual reading should ideally be 1 bar + the height in metres to the highest point of the system above the base of the appliance (up to a max of 1,5 bar).
  N.B. The safety valve is set to lift a 3 bars (30 mt).
- To lower the system pressure to the required value remove drain point or drain on the heating circuit.

6.6 LIGHTING THE BOILER (Fig. 50)

Before lighting the burner make sure that any heating circuit flow and return valves are open.

- If external controls are installed (e.g. timeclock and thermostat) make sure that they call for heat.
- Press On/Off switch to On (Fig.50)
- Turn control thermostat up to its maximum setting.
- Now the Burner should turn on
  With leak detection fluid test for gas soundness of all gas components and joints.
- See paragraph 6.14 for regulating the heating circuit thermostat.

CHECK GAS MAINS PRESSURE (Fig. 51) Fit a gas pressure gauge on pressure inlet 77 on the gas valve, after releasing the seal screw. Check the gas mains pressure with boiler operating.

Check with the Local Gas supplier if the pressure differs significantly from 20 mbar (natural gas), 37 mbar (G31) and 29 mbar (G30).

ELECTRICAL CONNECTION

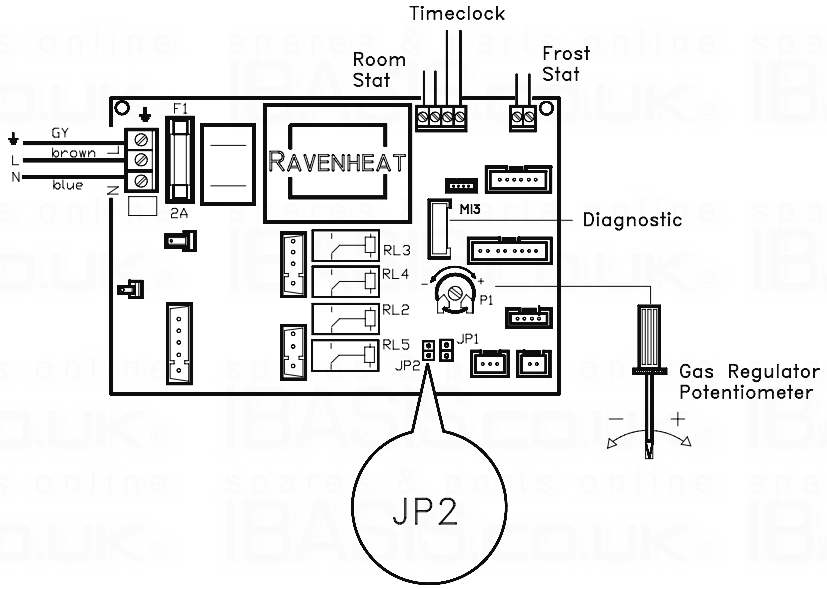

Fig. 48

INSTRUMENT PANEL

Fig. 50

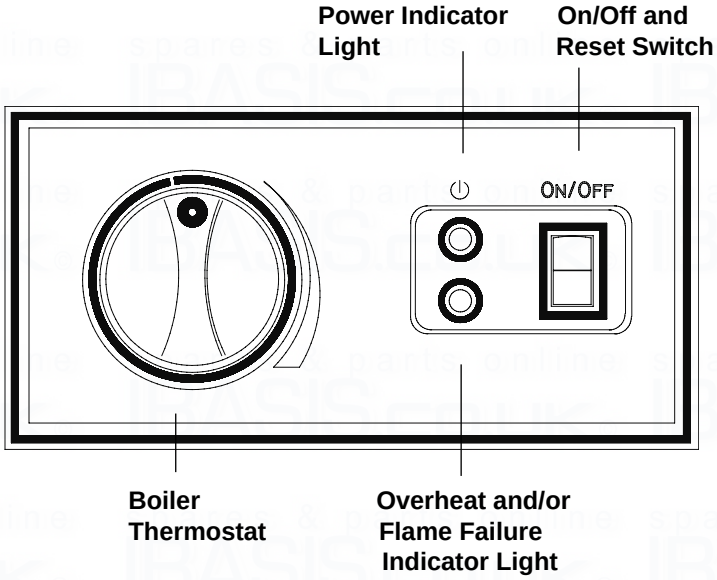

GAS VALVE

Key

77 - Upstream pressure inlet
81 - Downstream pressure outlet
104 - Gas valve modulator
110 - min. regulator nut
111 - Max regulator nut
114 - Electrical connections modulator
115 - Electrical connections

Fig. 51

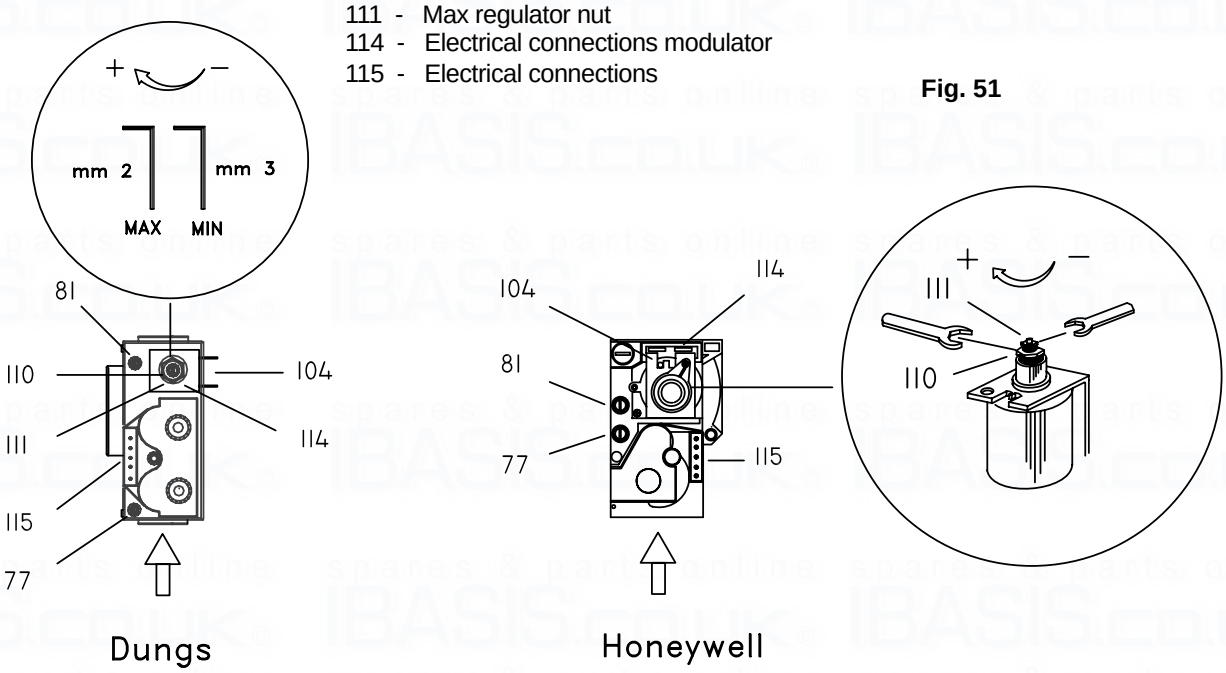

6.7 CHECK THE GAS PRESSURE AT THE BURNER

Now check the gas pressure at the burner is equal to 10.5 ± 0.5 mbar .
LPG check gas pressure inlet (37mbar propane - 29 mbar butane).
To do this proceed as follows

- Press to off On/Off Switch (Fig. 50).
- Set control thermostat at it's maximum setting.
- Fit a pressure gauge, using hose to pressure test point 81, (Fig 51). After first loosening it's close-off screw.
- Press to On on/Off switch (FIG.50)
- The pressure indicated after a few seconds on the pressure gauge is the maximum operating gas pressure.

6.8 ADJUSTING BURNER SETTING PRESSURE, HONEYWELL - DUNGS GAS VALVE (Fig.51)

- Remove cap covering modulator to gas valve.
- Detach one the cables connected to the modulator 114.
- With the boiler operating use a screw driver (HONEYWELL 9 mm spanner) to turn the nut 111 clockwise to increase pressure and anti-clockwise to decrease pressure.

NOTE: LPG ONLY
The minimun pressure is factory set and sealed, and cannot be adjusted.

6.9 CHECKING THE FLUE SYSTEM

6.9.1 The flue system should be visually checked for soundness. Check all connections and fixings are secure and tight.

benchmark

The code of practice for the installation, commissioning & servicing of central heating systems

Once the process of commissioning the boiler is complete, the commissioning engineer MUST complete his section in the Benchmark log book.

6.10 CHECKING THE HEATING THERMOSTAT

6.10.1 Allow the system to warm up and then turn the C.H. thermostat to ensure the main burner modulates from "high" to off and viceversa.
(Scale range covers approx. Off - 85° C).

6.11 HANDING OVER TO THE USER

6.11.1 After completion of installation and commissioning of the system, the installer should hand over to the Householder by taking the following actions:

- Hand the "User's Instructions" to the Householder and explain His/Her responsibilities under the "Gas Safety Regulations 1996".
- Explain and demonstrate the lighting and shutting down procedures.

RATIO BETWEEN BURNER PRESSURE AND OUTPUT

Fig.49

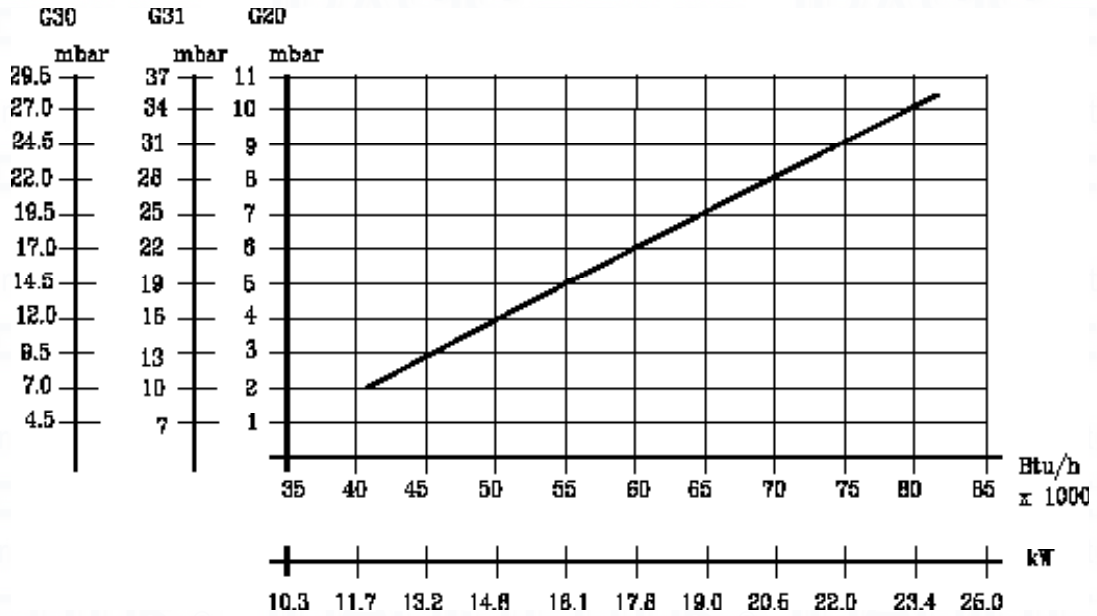

- The operation of the boiler including the use and adjustment of ALL system controls which should be fully explained to the Householder This then ensures the greatest possible fuel economy consistent with household requirements of both heating and hot water consumptions. Advise the User of the precautions necessary to prevent damage to the system, and to the building, in the event of the system remaining inoperative during frost conditions.
- Explain and demonstrate the function of time and temperature controls, neon lights radiator valves etc. for the economic use of the system.
- If an optional time clock is fitted, then draw attention to the timeclock User's Instructions and hand them to the Householder.
- Stress importance of regular servicing by a qualified Heating Engineer and that a comprehensive service should be carried out AT LEAST ONCE A YEAR.

SECTION 7 SERVICING INSTRUCTIONS

benchmark™

The code of practice for the installation, commissioning & servicing of central heating systems

Ravenheat are a member of the Benchmark initiative and fully supports the aims of the programme Benchmark has instructed to improve the standards of installation and commissioning of central heating systems in the UK and to encourage in the regular servicing of all central heating systems to ensure safety and efficiency.

7.1 SERVICING

7.1.1 To ensure continued efficient operation of the appliance it is necessary to carry out servicing and cleaning at regular intervals The frequency of cleaning will depend upon the particular installation conditions and usage but in general, once per year should be adequate.

WARNING:

Before the start of any servicing or replacement of components always isolate electricity supply to the appliance and always turn off the appliance gas supply at the gas

Fig.52

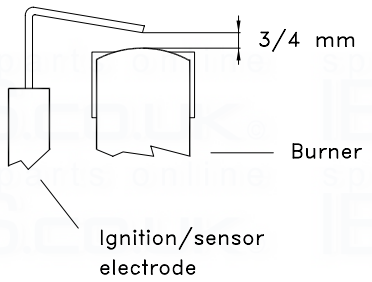

Data badge position - lower left hand sub frame.

- The following notes apply to the appliance and its controls but it should be remembered that attention must also be paid to the heating and hot water circuits with special attention to radiator valves, thermostats, clocks, leaking hot water taps etc.
- Where it is necessary to replace a gasket that relies on adhesive for securing - this adhesive will be supplied with the gasket as a spare item.
- In all cases prior to servicing, remove the outer case (sect. 5.4).
  Operate the appliance by turning the boiler thermostat up and down and observe the main burner.
- Check that the flame covers all the flame ports and is of a light blue colour Yellow flames and excessive lifting of flames indicate poor combustion.
- **IMPORTANT:** After completing any servicing or replacement of gas carrying components it is essential that a test for gas soundness is always carried out along with functional checks in operation.

7.2 TO INSPECT AND CLEAN THE APPLIANCE

7.2.1 Before carrying out cleaning operation, cover the electrical control panel with a piece of waterproof material to protect it from debris.

7.2.2 Inspect the heat exchanger for any blockage Deposits of any material should be brushed away using a soft brush.
NOTE: Do not use brushes with metallic bristles.

7.2.3 Examine internal pipe-work connections and automatic air vent for any water leaks. Rectify if necessary.

7.2.4 Examine the combustion chamber insulating material and renew if damaged.

7.2.5 Remove and examine the burner injector clean or renew, as necessary.

7.2.5.1 Inspect the burner and remove any deposit with a soft brush. Check the electrodes for damage or deterioration, clean or renew as necessary.
Ensure that the spark gaps are correct to dimensions specified in Fig.52.

7.2.6 Inspect the secondary condensate heat exchanger.Deposits can be cleared by removing and flushing out the exchanger. Inspect the siphonic condensate trap for a blockage. Any deposits should be flushed out (Fig. 90).

7.2.6.1 To remove condensate trap (sect 5.4) Pull forward the trap (Fig 90).
Unscrew the earth wire, and the sensor Replace in reverse order

7.2.7 Examine the fan for any mechanical damage, check to ensure free running of the fan wheel Clean the wheel if necessary with a soft brush Check sealing gasket and renew if damaged (sect 7.6)

7.2.8 Examine flue duct and flue hood and ensure that there is no obstruction Examine the gasket at the entry into the flue duct

7.2.9 It is essential that a good seal is made at the outlet to the fan, renew this gasket if there is any sign of damage or deterioration

7.3 TO REMOVE/REPLACE THE CASING (Fig.19,20 & 21)

7.3.1 Unscrew the 4 screws that fasten the lower grating down the casing and remove it.
Remove the 4 screw that secure the top and below of the casing. Carefully side forward to lift off.

7.4 TO REMOVE/REPLACE THE DEPRESSION CHAMBER COVER

7.4.1 Remove the front casing panel (sect 7.3)

7.4.2 Unscrew all the screws that fasten the cover to the chamber body and put them into a container so that they don't get lost

7.4.3 Detach the cover, being careful not to damage the seal

7.4.4 Reassemble in reverse order
Ensure good seal of cover when replacing

7.6 TO REMOVE/REPLACE THE FAN ASSEMBLY (Fig. 54)

7.6.1 Remove front casing (sect 7.3).
Remove depression chamber front cover as in (sect 7.4).

7.6.2 Disconnect the electrical connections from the fan motor

7.6.4 Support the fan and remove the two fixing screws and bracket from the front of the flue hood
Carefully withdraw from condensing heat exchanger then from the appliance Place in a safe place until required
Reassemble in reverse order Ensure wires are connected correctly (Fig 94)

7.6.5 TO REMOVE/REPLACE CONDENSING HEAT EXCHANGER Fig. 55-56

7.6.5.1. Remove front casing (sect. 7.3). Remove depression chamber front cover as in (sect.7.4).

7.6.5.3 Remove the fan (sect.7.6)

7.6.5.4 Disconnect 2 unions for the heating water pipelines (Fig.55) .

7.6.5.5 Disconnect condensing discharge pipe by pulling off the pushfit connector at top rear of boiler (Fig 55)

7.6.5.6 Pull the heat exchanger down and slightly forward until it comes out of the connection from chamber (Fig.56).

7.6.5.7 Replace in reverse order.Taking care to refit discharge pipe at rear.
IMPORTANT: When replacing heat exchanger new seals must be used.

7.7 TO REMOVE/REPLACE THE FLUE HOOD (Fig.57-58)

7.7.1 Remove front casing (sect 7.3)
Remove depression chamber front cover as in (sect.7.4)

7.7.2 Remove the fan (sect 7.6)

7.7.2.1 Remove condensing heat exchanger (sect.7.6.5).

7.7.3 Remove the three screws on the front that fasten hood to the combustion chamber

7.7.4 Remove the two screws at the rear of hood.

7.7.6 Replace in reverse order.

7.8 TO REMOVE THE HEAT EXCHANGER (Fig. 59-60)

7.8.1 Remove front casing (sect.7.3). Remove depression chamber front cover as in (sect. 7.4) .

7.8.4 Remove the fan (sect. 7.6).

7.8.5 Remove condensing heat exchanger (sect 7.6.5).

7.8.6 Remove the flue hood (sect. 7.7).

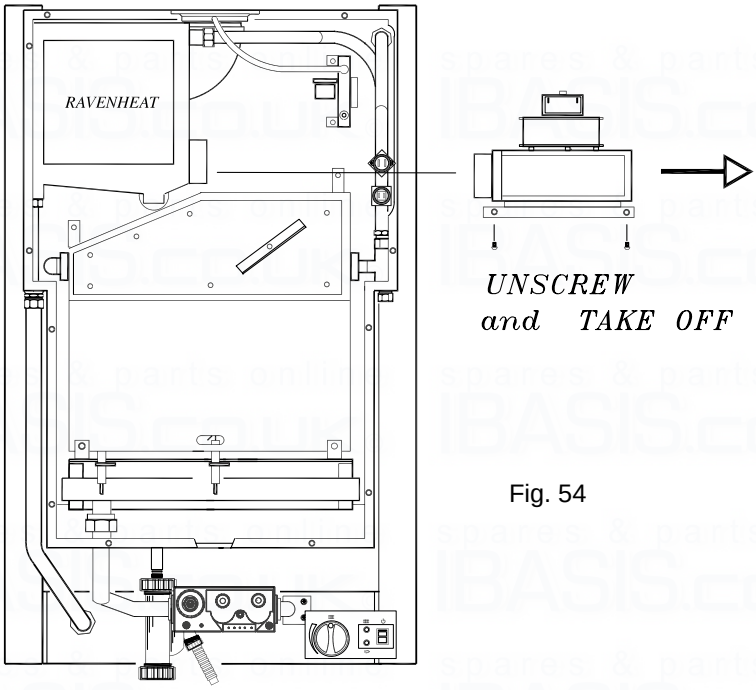

Fig. 54

7.8.8 Disconnect unions for two heating (right side of boiler) water pipelines (Fig.59).

7.8.9 Unscrew the ring that fasten the heat exchanger to the combustion chamber.(Fig.59).

7.8.10 Remove the two side insulation panels at top of heat exchanger.

7.9 TO REMOVE/REPLACE COMBUSTION CHAMBER INSULATION PANELS (Fig.63)

7.9.1 Remove front casing (sect 7.3) .
Remove depression chamber front cover (sect 7.4).

7.9.2 Remove fan (sect. 7.6).

7.9.3 Remove condensing heat exchanger (sect. 7.6.5)

7.9.4 Remove the flue hood (sect 7.7).

7.9.5 Remove burner (sect. 7.15).
Remove top insulation pieces at sides .
Remove 2 screws securing combustion chamber to rear of boiler.
Lower chamber carefully remove all insulation panels.

7.9.6 Replace in reverse order.

7.10 TO REPLACE THE ELECTRODE (Fig. 61)

7.10.1 Remove front casing (sect. 7.3).
Remove depression chamber front cover .

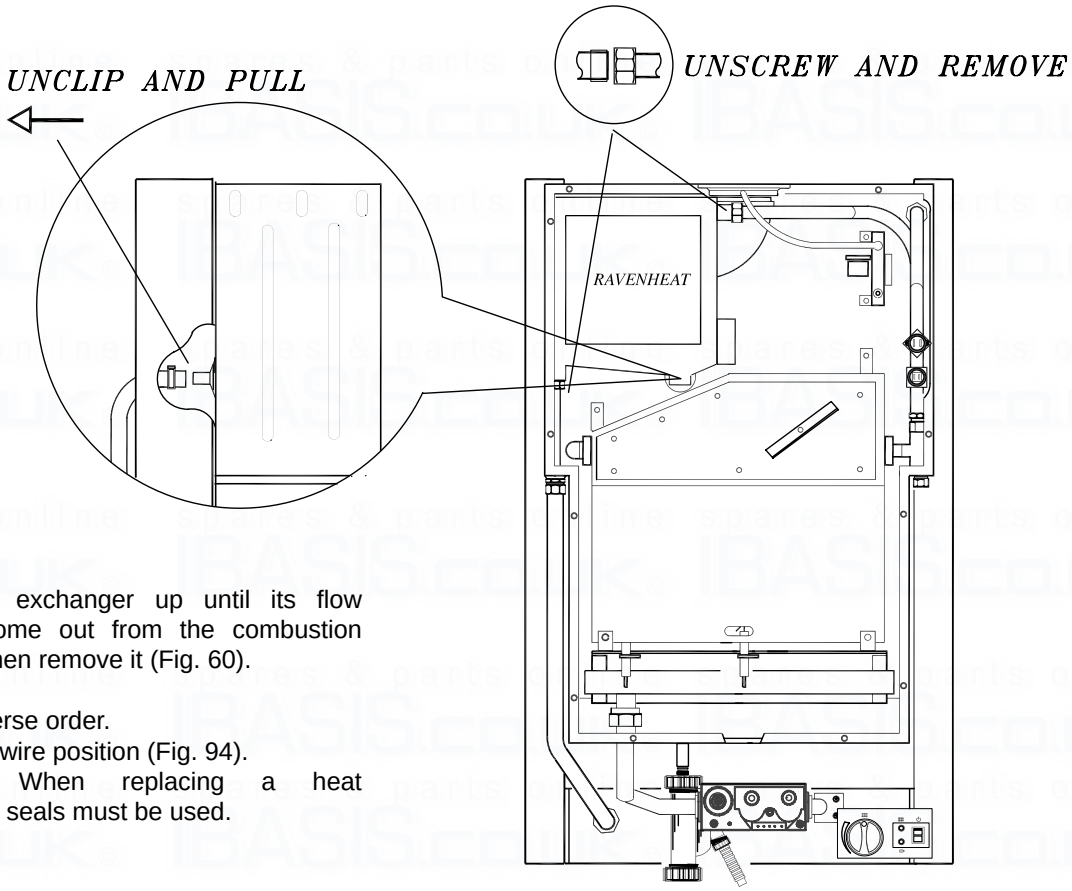

Fig. 55

7.8.11 Pull the heat exchanger up until its flow connections come out from the combustion chamber and then remove it (Fig. 60).

7.8.12 Replace in reverse order.
Ensure correct wire position (Fig. 94).
IMPORTANT: When replacing a heat exchanger new seals must be used.

Fig. 56

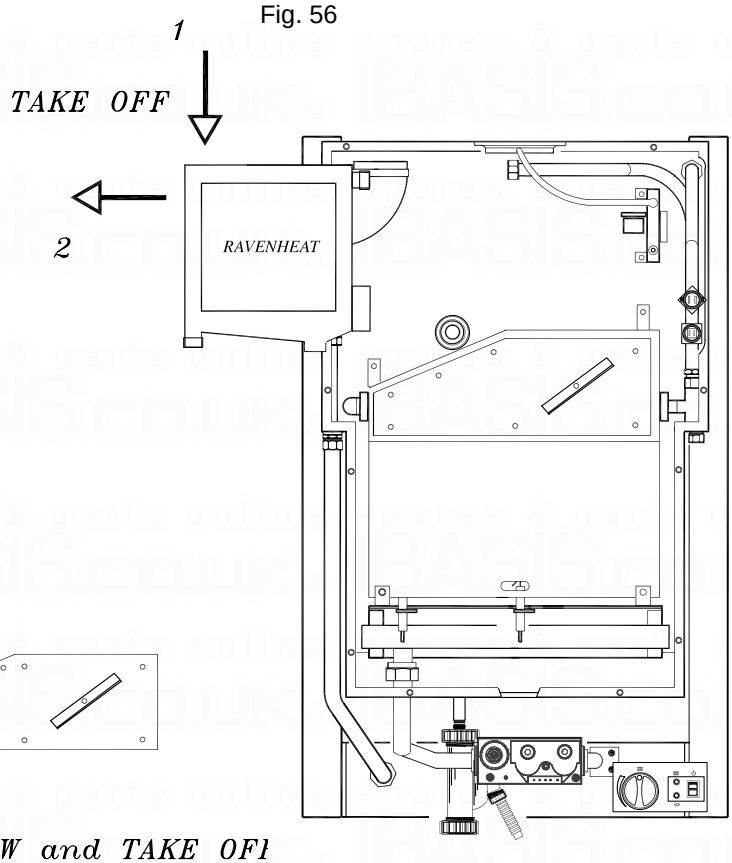

Fig. 57

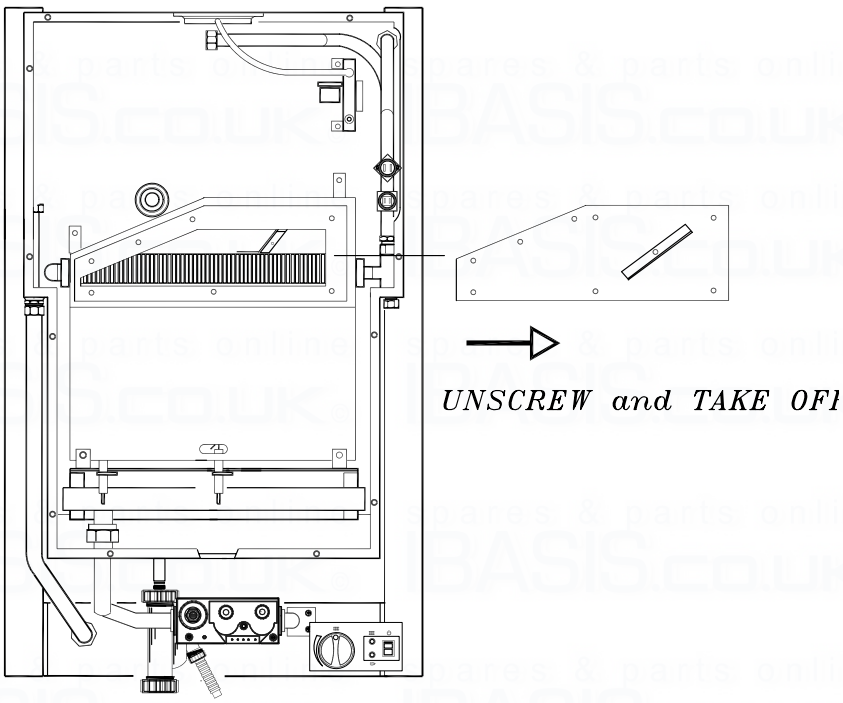

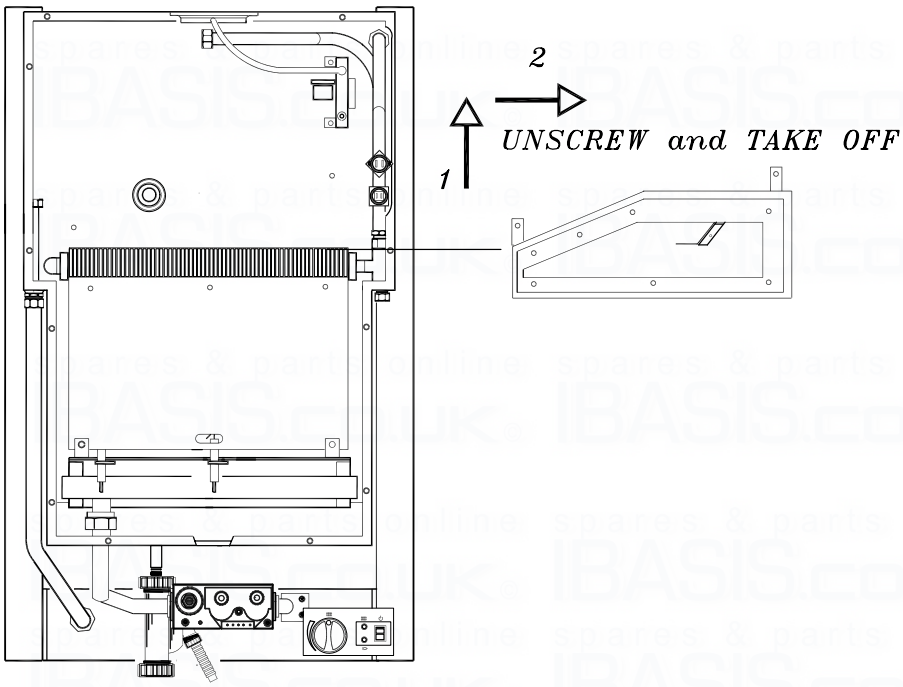

Fig. 58

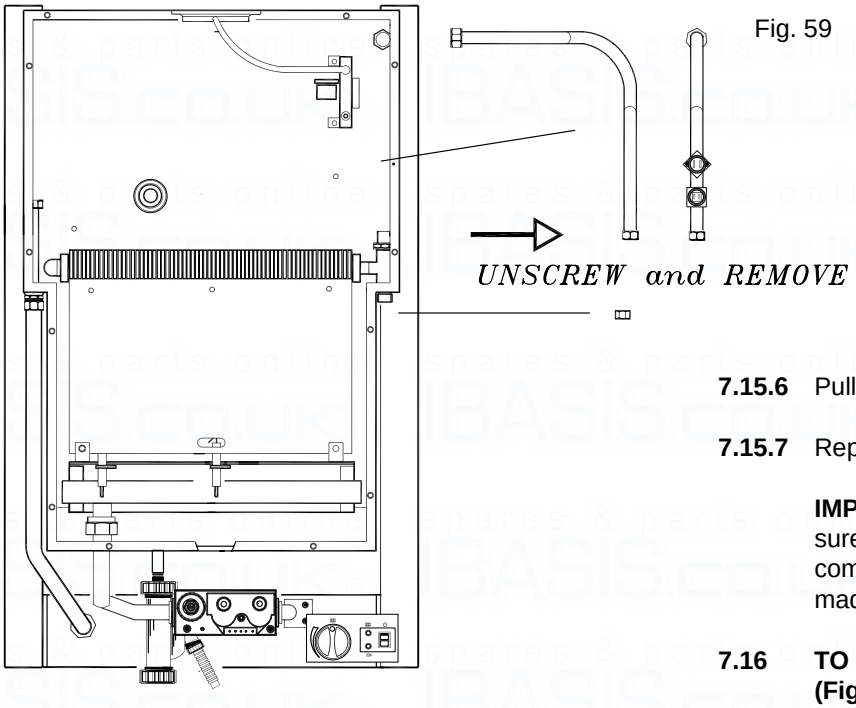

Fig. 59

7.10.2 Detach the wire from electrode and then unscrew the nut that secures it to the burner and remove .(Fig.61).

7.10.3 Replace with new electrode in reverse order.

7.14 TO REMOVE/REPLACE THE INJECTORS Fig.62-63).

7.14.1 Remove the front casing and the depression chamber front cover (sect.7.3,& 7.4)

7.14.2 Unscrew the union and the 4 screws securing the manifold at the burner .

7.14.4 Pull the manifold up and out from the combustion chamber (Fig 62).

7.14.5 Unscrew and replace the injectors and their seals (Fig. 63).

7.14.6 Replace in reverse order.

7.14.7 Relocate the grommet, sealing the gas supply pipe to the casing taking care not to damage it Replace if necessary.

7.15 TO REMOVE/REPLACE THE BURNER

7.15.1 Remove the front casing and the depression chamber front cover (sect.7.3 & 7.4)

7.15.4 Remove the injectors manifold as described in sect. 7.14

7.15.5 Remove the two screws securing the burner to the combustion chamber.

7.15.6 Pull the burner forward and remove (Fig.64).

7.15.7 Replace in reverse order.

IMPORTANT: When refitting the burner make sure that the pins at the rear of the combustion chamber locate into the slots made on the rear of the burner

7.16 TO REMOVE/REPLACE THE GAS VALVE (Fig. 51)

7.16.1 Remove front casing panel (sect 7.3) and remove the lower grating.

7.16.2 Remove the 2 screws that fasten the instrument panel .

7.16.3 Lower the instrument panel down by rotating it on its own hinges.

7.16.4 Disconnect the electrical connections from the gas valve and modulator.

7.16.7 Remove the eight screws (four per side) that connect the gas valve to the gas pipelines and then remove it from its seat.

7.16.8 Replace in reverse order, always using new seals.

7.19 TO REMOVE/REPLACE THE HEATING CONTROL THERMOSTAT

7.19.1 Remove the front casing (sect. 7.3) and remove the lower gratin panel, lower down the instrument panel .

7.19.2 Remove the 2 screws that fasten the instrument panel, and lower it panel down by rotating it on its own hinges.

7.19.3 Remove the top of control box cover by unclipping it from its 4 locate pins.

7.19.5 Pull off the thermostat knobs and unscrew lock nut which fastens the potentiometer to the instrument panel.

7.19.6 Detach all the connectors from PCB board.

7.19.7 Replace in reverse order.

Fig. 60

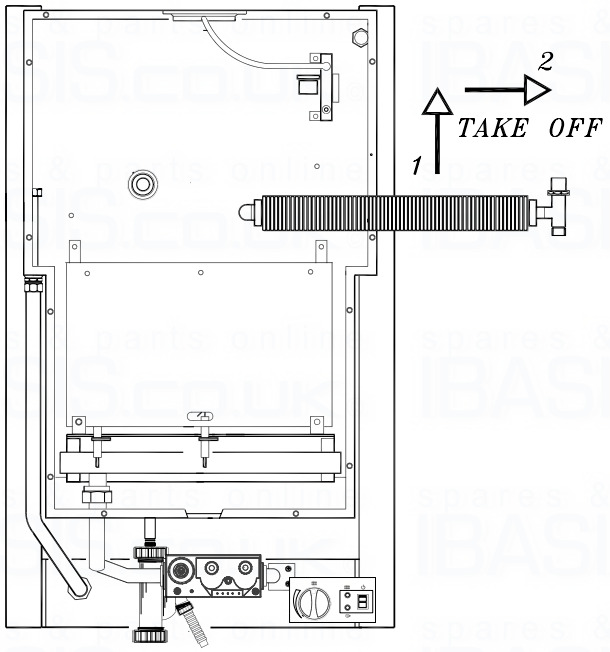

Fig. 61

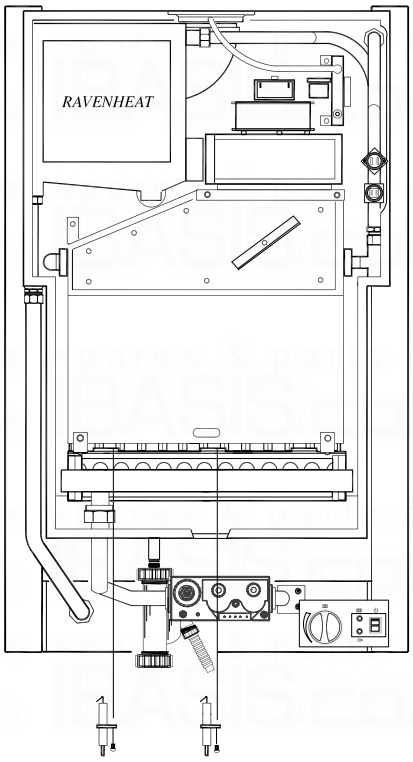

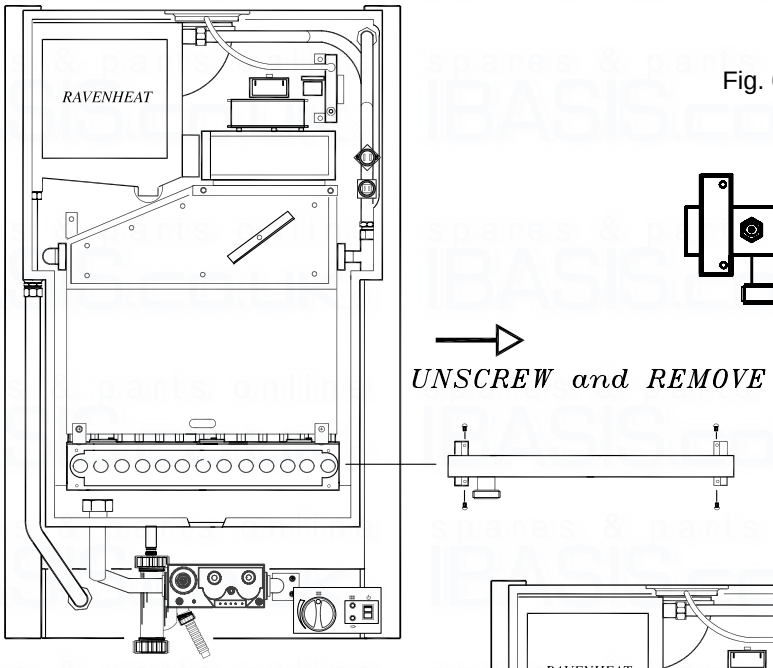

Fig. 62

Fig. 63

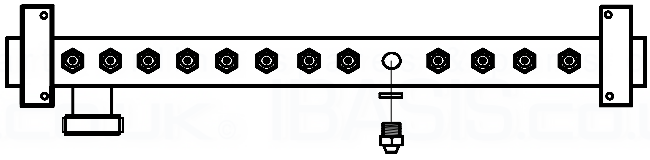

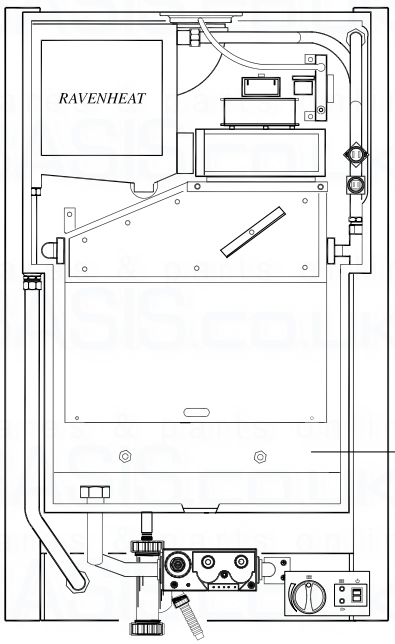

Fig. 64

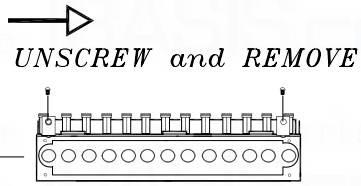

7.22 TO REMOVE/REPLACE THE OVERHEAT THERMOSTAT (Fig. 78,79)

7.22.1 Remove the front casing (sect. 7.3)

7.22.2 Remove the depression chamber cover.

7.22.3 Unscrew the 2 wires that connect to the overheat termostat, macking sure these wires will subsequently be reconnected to the same poles. (Fig.1).

7.22.4 Replace in reverse order .

7.24 TO REMOVE/REPLACE THE DIFFERENTIAL PRESSURE SWITCH (Fig. 65)

7.24.1 Remove the front panel from the outer casing and the depression chamber front cover (sect. 7.3 & 4).

7.24.2 Detach the wires that connect to the pressure switch, make sure that these wires are later reconnected to the same poles.

7.24.3 Unscrew the two screws that fasten the pressure switch to the back of combustion chamber.

7.24.4 Remove the two silicone tubes.

7.24.5 Ensure tubes are connected correctly (Fig.65) avoiding kinks.

7.24.6 Replace in reverse order.

7.25 TO REMOVE/REPLACE THE IGNITION/CONTROL BOARD

7.25.1 Remove front casing (sect. 7.3 and lower gratin panel.

7.25.2 Remove 2 screw to instrument panel.

7.25.3 Remove the plastic box protection by unclip ping it from its 4 locating pins (2 each side).

7.25.4 Detach the wires by unclipping the connectors from the control board.

7.25.5 Detach the PCB board from its base by unscrewing the 4 screws.

7.25.6 Replace in reverse order(ensure all electrical connections are made correctly).

7.26 TO REMOVE/REPLACE CONDENSING TRAP (fig.66).

7.26.1 Remove the casing (sect 7.3) and lower the instrument panel .

7.26.2 Remove the securing clip and pull out the plastic pipe that connect the condensing trap at the heat exchanger.

7.26.3 Unscrew the nut that fasten the condensing trap to the backframe and remove it.

7.26.4 Replace in reverse order.

AIR PRESSURE SWITCH

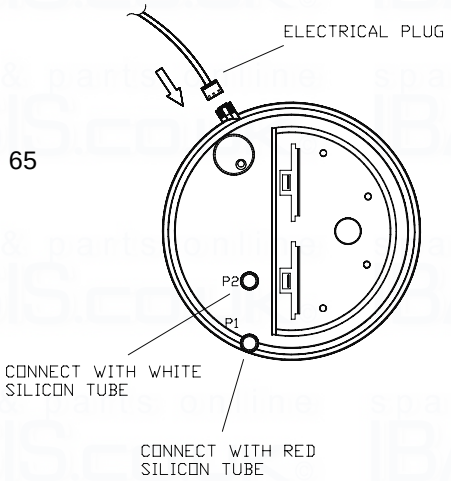

Fig. 65

CONDENSING TRAP

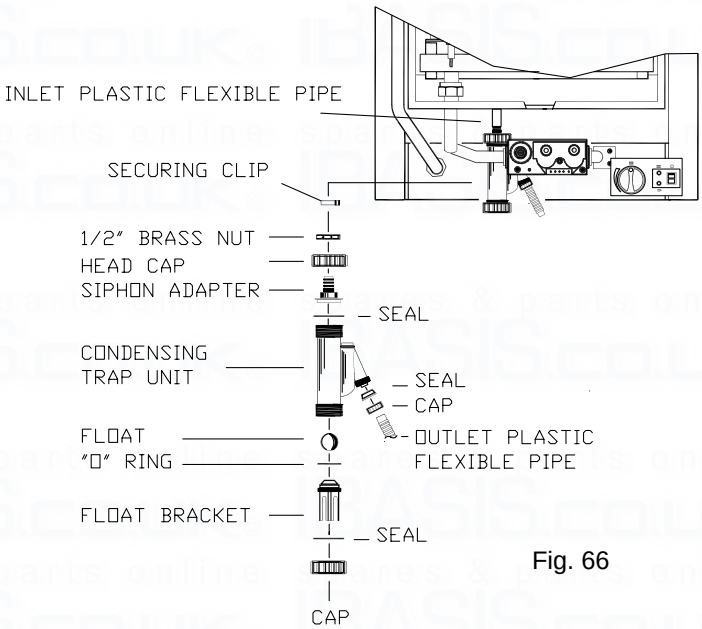

Fig. 66

SECTION 8 FAULT FINDING

Stat to maximum

Ensure external controls calling for heat (Room Stat/Time Clock/TRV)

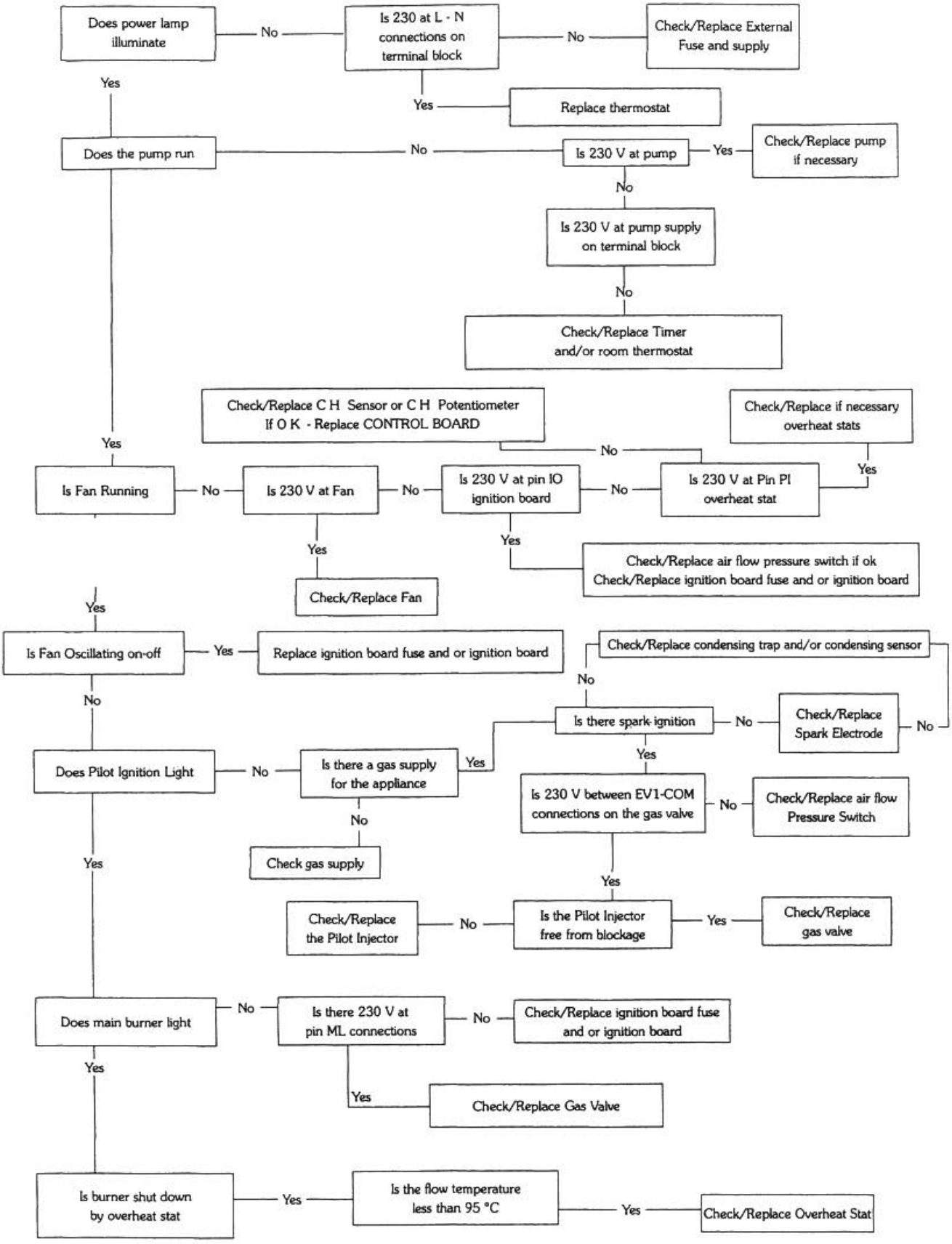

Section 9 ELECTRICAL SYSTEM DIAGRAM

Fig. 94

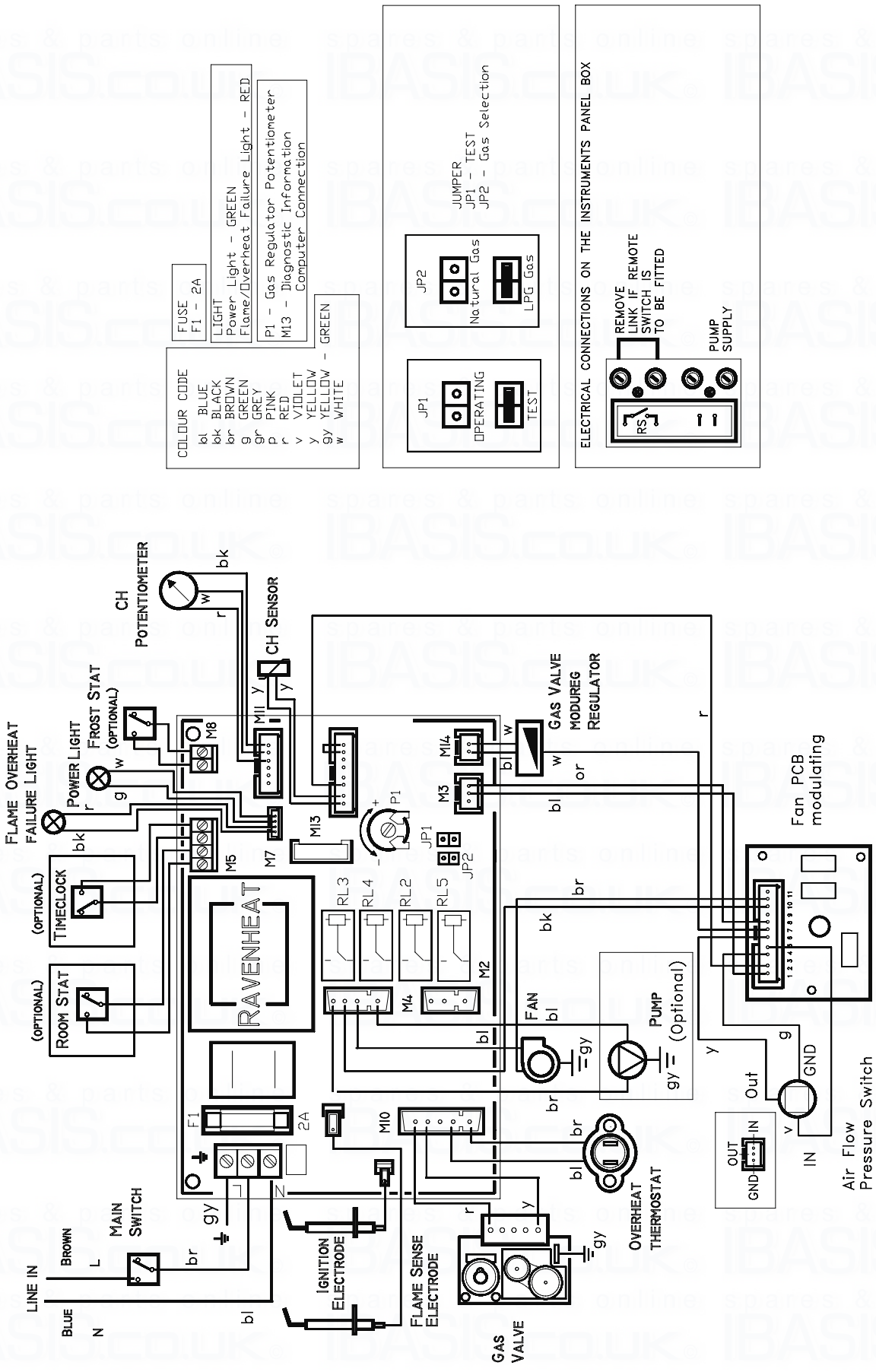

9.0 GENERAL SCHEMATIC DIAGRAM WIRING TO EXTERNAL SWITCHES AND THERMOSTATS VOLT FREE

Fig. 95

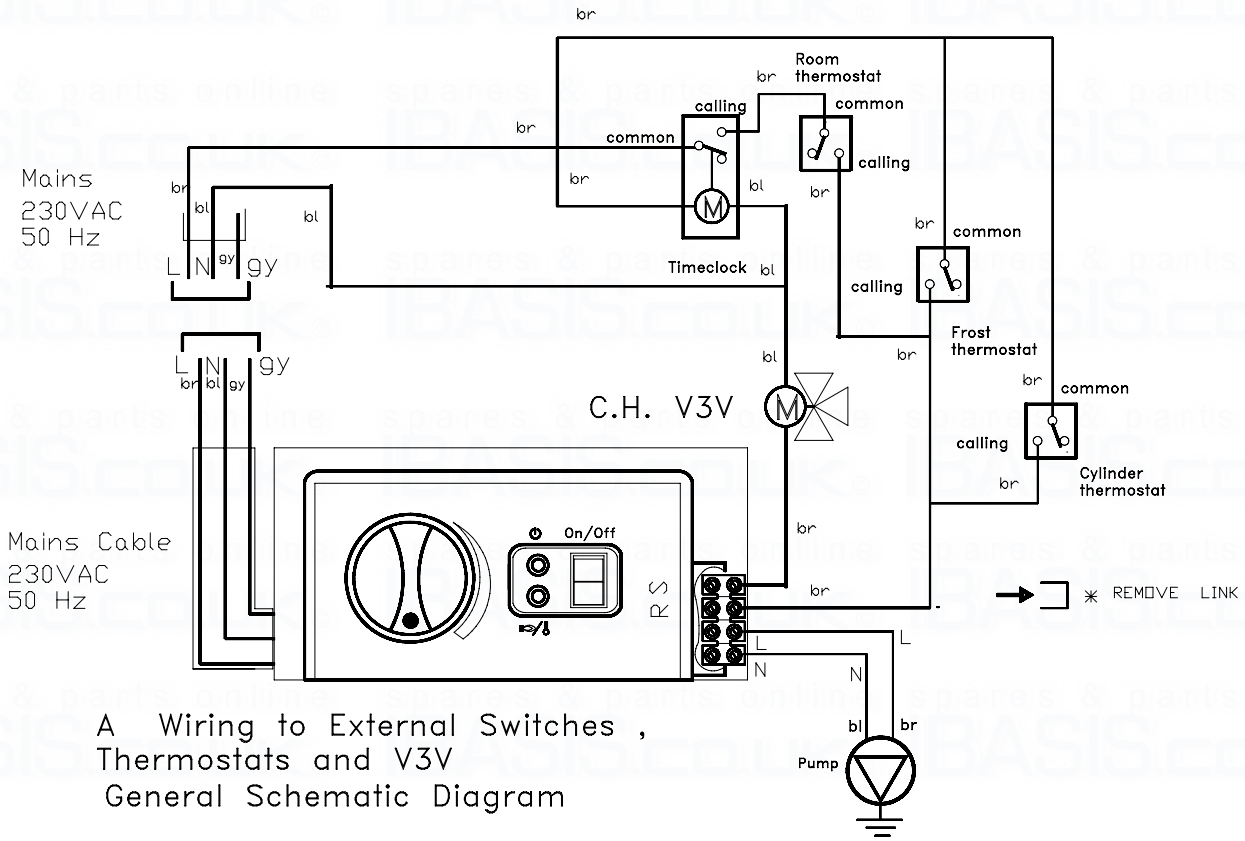

Fig. 95.1

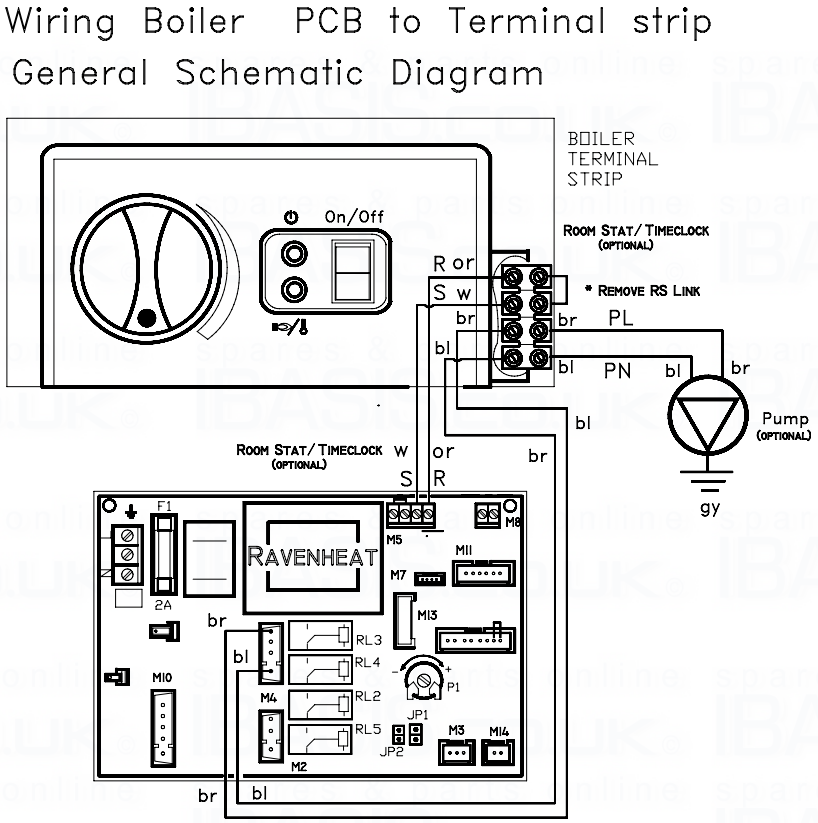

9.1 WIRING TO “Y” AND “S” PLAN INSTALLATIONS USING AN EXTERNAL PROGRAMMER

Fig.96

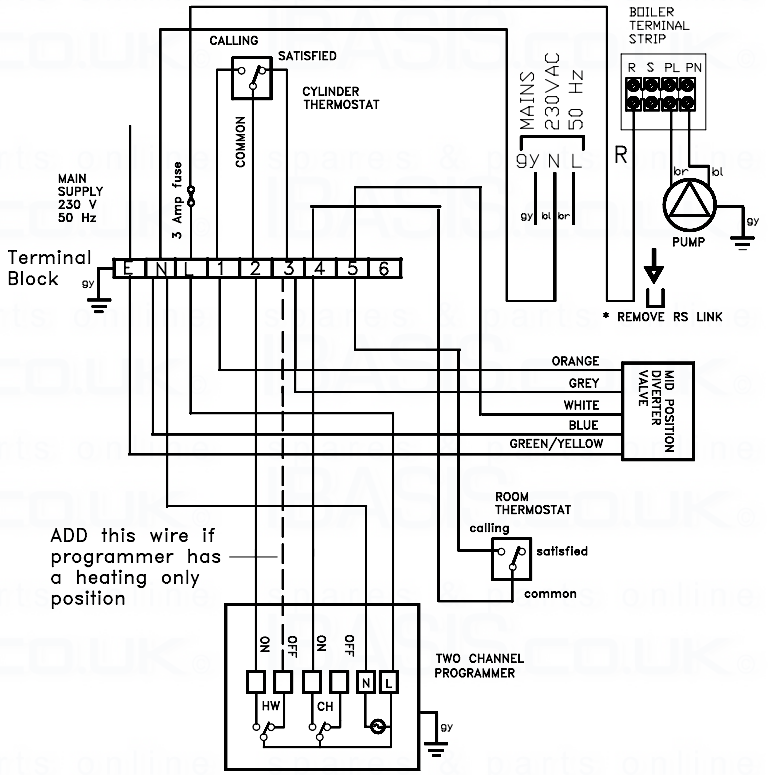

“ Y “ PLAN

Fig.97

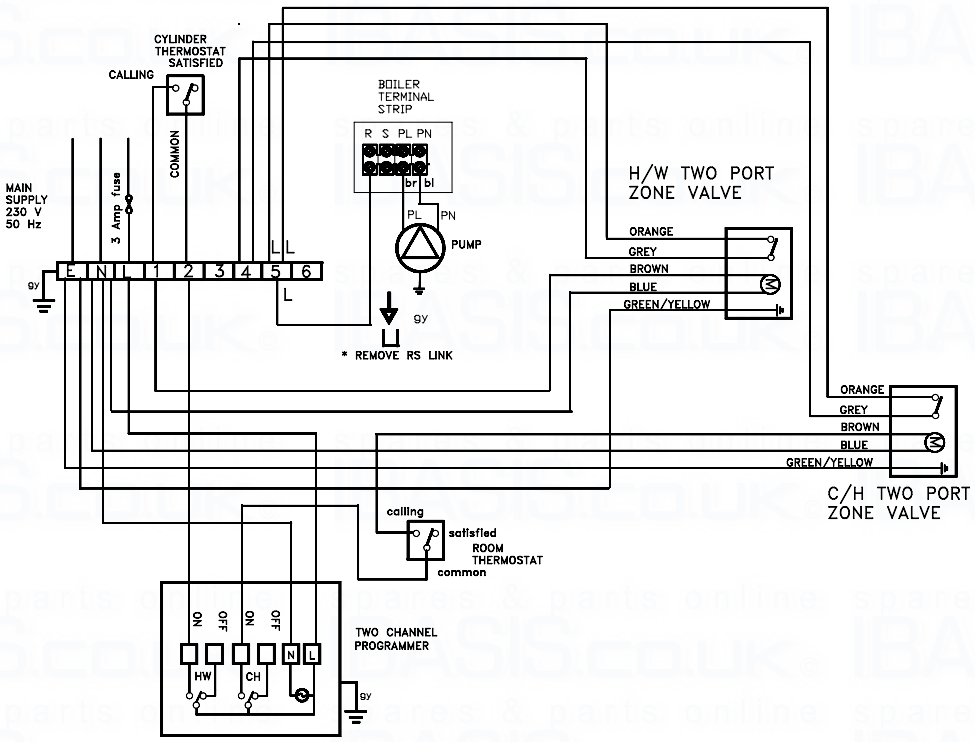

“ S “ PLAN

8.0 INSTALLATION INSTRUCTIONS FOR TWIN FLUE PIPE (ECCENTRIC FLUE DUCT SYSTEM)

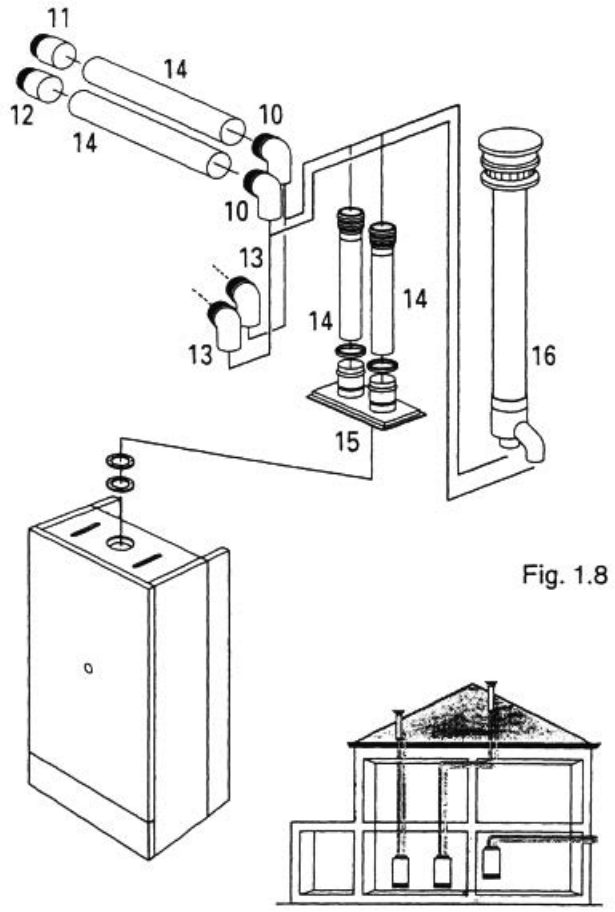

Fig. 1.8

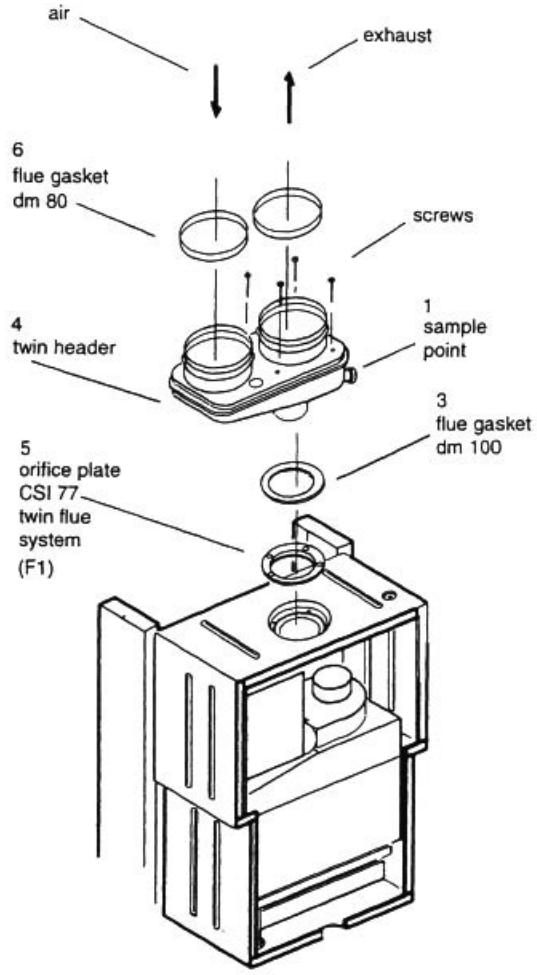

10 - air intake bend 90° 13 - 45° flue exhaust bend

10 - air intake bend 90°	13 - 45° flue exhaust bend
10 - flue exhaust bend 90°	14 - flue exhaust duct
11 - air inlet terminal	14 - air intake duct
12 - flue exhaust terminal	15 - two-way flue gas header
13- 45° air intake bend duct	16 - vertical eccentric flue exhaust duct

IMPORTANT
These instructions must be read in conjunction with the main installation and servicing instructions

As with all flues the kits must be installed taking due account of the current issue of BS 5440 parts 1 & 2 and timber frame housing REF DM2
Also note that the requirements will vary depending upon the kit being installed.
Guidance is provided but unless otherwise stated, always comply with the recommendations of the relevant codes of practice

8.1 TWIN FLUE INSTRUCTIONS

This part of the installation manual covers the installation and fixing instructions of the twin flue eccentric flue duct systems only
When ordering twin flue it must be stated for CSI range.
Typical installation procedures are illustrated by drawings

Supplied with the CSI twin flue header is a F1 orifice plate along with supplementary depression seal
Before fixing the twin flue system the existing orifice plate must be replaced with F1 also ensuring supplementary seal has been fitted

Remove the 13 screws securing the depression front panel item 2 figure 53A to expose front edge of depression chamber (Twin flue instructions figure 1 adjacent) Using adhesive sponge supplied with CSI twin flue header, carefully attach to depression chamber so as to create a softer seal
Taking care not to damage the new seal, carefully re-fit the depression chamber front cover in reverse order

Take out the 4 temporarily fitted securing screws, lifting our the gasket and orifice plate disconnecting it from the venturi tube

Discard this orifice plate and re-fit the F1 orifice plate ensuring that the venturi tube has been re-fitted, making sure this is securely located into the locating peg
Locate the sealing washer fixing the twin flue header as illustrated making sure that the inner aluminium exhaust locates firmly in the outlet spigot Make sure that the screws are satisfactorily located through the gasket seal

Locate the 2 x 80 mm 'O' rings in the twin flue header

Figures show the versatility of this flueing system. Measurements and bends must be calculated correctly so as not to oversize maximum flue lengths

All located 'O' rings must be lubricated with a silicone grease to ensure easy, snug fit

NOTE: Exhaust flue must slope 2° down towards the boiler 35 mm fall per metre

Spacing Clips
Spacing clips are available on request should they be required.
NOTE: for eccentric vertical flue a 125 mm (5 in) diameter flashing plate will be required

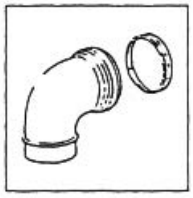

90° M/F bend consisting of.

90° elbow with 'O' ring side F
80 mm dia 'O' ring

135° M/F bend consisting of

135° elbow with 'O' ring side F
80 mm dia 'O' ring

Vertical eccentric flue exhaust duct

E = EXHAUST
I = INLET
T =TERMINAL

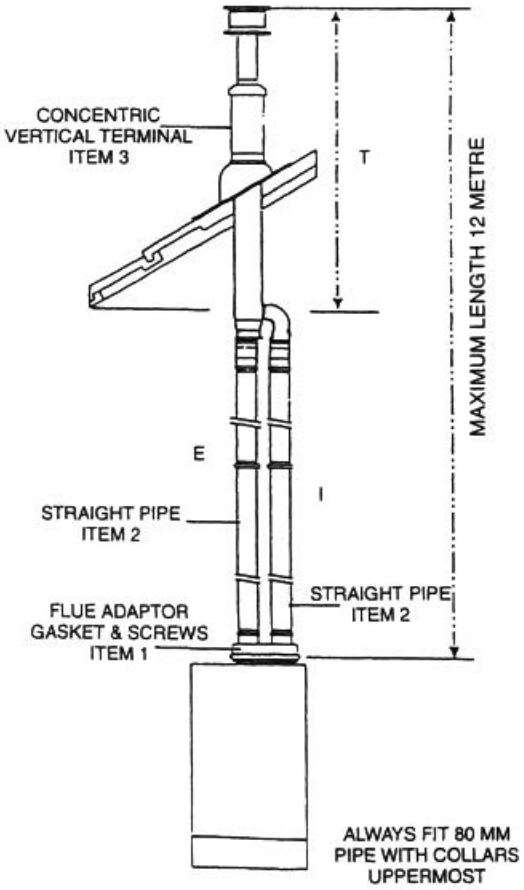

Exhaust/suction system with concentric pipes for flat or sloping roofs
Extensions with two separate pipes

Maximum distance = I + E + T = 2 Metre + 2 Metre + 1 Metre = 12 Metre maximum (pipe + terminal).
Minimum distance D = T = 2 metre

Exhaust terminal must not be cut

NOTE: The pressure loss for each elbow fitted is:

90° slow bend less 3 metre of pipe for each one fitted

135° bend less 1.5 metre of pipe for each one fitted

NOTE: If bends are used in the exhaust flue then horizontal sections must be avoided and there must be a 2° slope towards the boiler 35 mm fall per metre

IMPORTANT: See Fig. 42 for terminal clearances

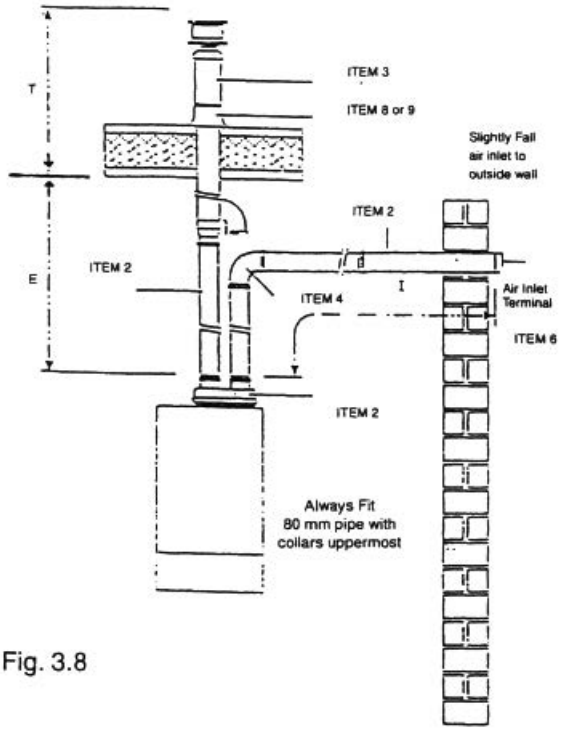

Fig. 3.8

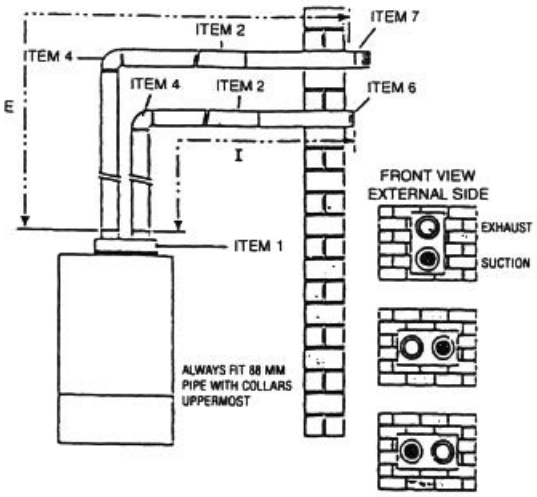

Fig. 4.8

ITEM	DESCRIPTION	PART NO
1	CSI flue adaptor gasket and screws	
2	Straight pipe	30005
3	Eccentric vertical terminal	
4	90º slow bend	30001
5	45º bend	30003
6	Air inlet terminal (plastic) 80 mm	30009
7	Exhaust terminal (stainless steel) 80 mm	30011
8	Pitch roof slate	
9	Flat roof slate	
10	Twin flue pipe socket seal 60 mm	30007

Exhaust/suction system with two separate rated 80 dia. Pipes - exhaust on flat or sloping roof, suction from vertical wall

Maximum distance D = I + E + T = Total exhaust/inlet pipe = 20 metre

Exhaust terminal must not be cut

Min inlet pipe distance = 0.5 metre

NOTE: The pressure loss for each elbow is

90° slow bend less 3 metre of pipe for each one fitted

45° bend less 1.5 metre of pipe for each one fitted

Minimum total length = 2 metre

NOTE: Exhaust flue must slope 2° down towards the boiler 35 mm fall per metre

IMPORTANT:
see Fig. 6 and 42 for terminal clearances

Exhaust/suction system with two separate pipes through a single vertical wall

Maximum distance D = I + E = Totale exhaust/inlet pipe 18 metre

Minimum distance D = I + E = 1.5 metre

Min inlet pipe distance 0 5 metre Min distance between pipe 50 mm

NOTE: The pressure loss for each elbow fitted is

90° slow bend less 3 metre of pipe for each one fitted

45° bend less 1.5 metre of pipe for each one fitted

IMPORTANT: inlet and exhaust terminals must never be installed on opposite walls of the building (PrEN483)

IMPORTANT NOTICE: If the flue terminates less than 2 M. above a balcony, above the ground, or above a flat roof to which people have access, then a suitable terminal guard must be fitted
Fit only recommended flue terminal guard by securing concentrically around terminal with screws

Available on request from:
RAVENHEAT MA NUFACTURING LTD
Chartists Way
Morley, Leeds, West Yorkshire
ENGLAND LS27 9ET - U.K
Tel (0113) 252 007
IMPORTANT:
see Fig. 6 and 42 for terminal clearances

EXPLODED PARTS DIAGRAM

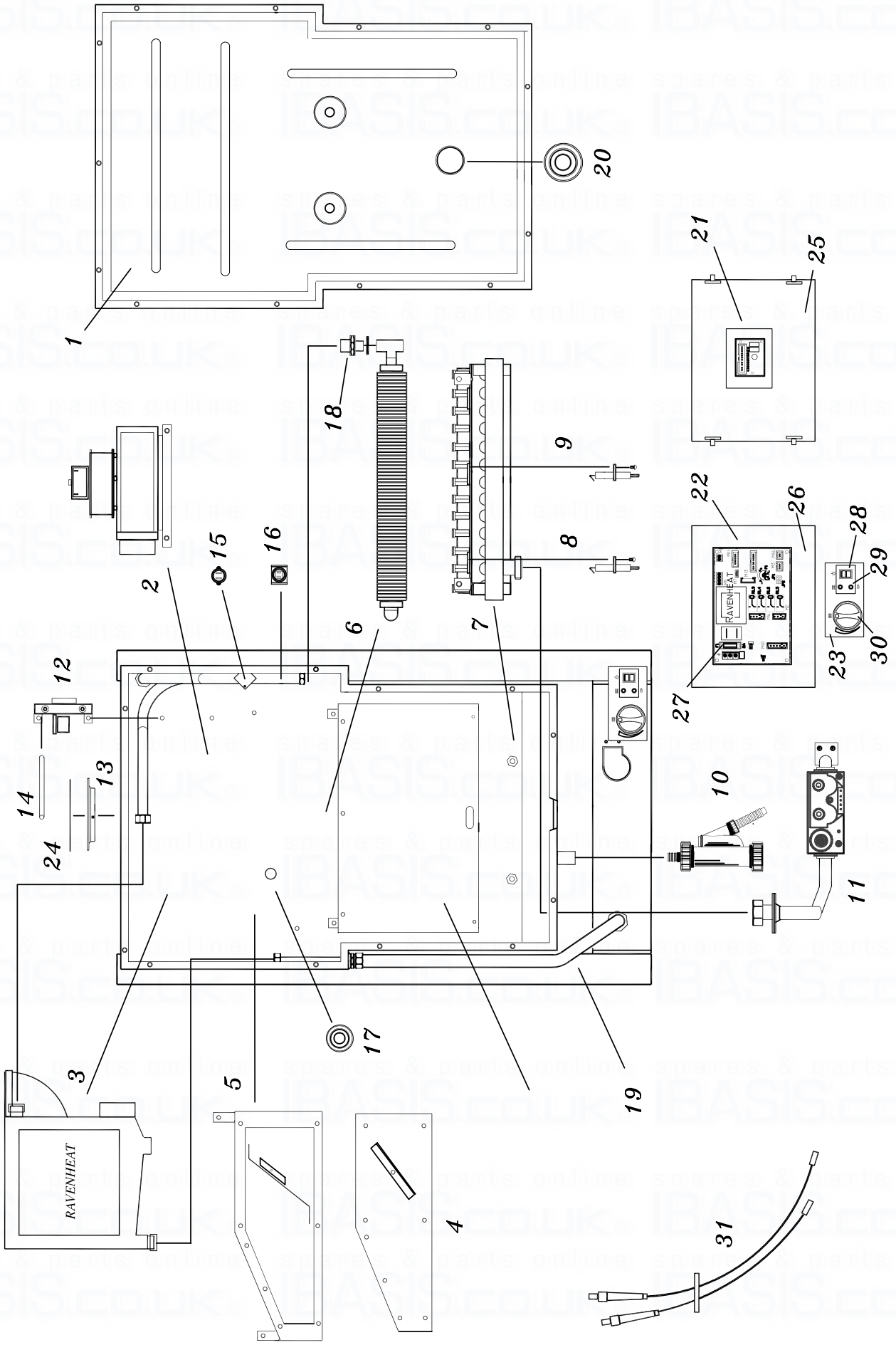

RAVENHEAT CSI PRIMARY AAA CONDENSING BOILER

SHORT LIST OF SPARE PARTS

Pos.	Ravenheat Part. No.	G.C. Part. No.	Description
1	0001COP01010/0		Depression chamber cover
2	0012VEN03005/1		Fan
3	0002SCA06006/0		Condensing heat exchanger
4	0001COP06005/0		Flue gas exhaust hood cover
5	0001CAP06005/0	E23-733	Flue gas exhaust hood
6	0002SCA06011/0		Heat exchanger
7	0003BRU06016/1		Burner PRIMARY natural gas
8	0012CAN09005/2		Sensing electrode
9	0012CAN09005/2		Ignition electrode
10	0014RAC11005/0		Condensing trap
11	0008VAL09015/0		Dungs gas valve
11.1	0008VAL06007/0		Honeywell gas valve
12	0005PRE06006/0		Air Pressure Switch
13	0001DIA06005/0	E23-730	Flue restriction ring 79CS1(F2)
14	0014TUB01006/1		Red Nylon tube from pressure switch
15	0007TER08010/0		Overheat thermostat
16	0007SON11015/0		C.H. Clip Sensor
17	0014PAS09010/0		Depression chamber seal
18	0011RAC06005/0		Heat exchanger Nipple
19	0001TEL06010/3		Frame
20	0014SPI09005/0		Sight glass
21	0012CIR06010/0		Fan control board
21.1	0012CIR06011/0		Fan control board red
22	0012CIR06015/0		Printed Ignition control board
22.1	0012CIR06020/0		Printed Ignition control board red
23	0014PAN06005/0		Instrument Panel
24	0014GUA01020/1	371277	Flue gasket
25	0014COP06015/0		Electrical Box Cover
26	0014SCA11005/0		Electrical Box
27	0012FUS01008/0	E23-720	Internal fuse 2A

Pos.	Ravenheat Part. No.	G.C. Part. No.	Description
28	0012INT09010/0		Main Switch
29	0012LAM09005/0		Indicator Light
30	0014MAN06015/0	E23-718	Knob
31	0012CAV06020/0		Cable for spark-sensing electrode
32	0003UGE03005/0	371297	Nozzle Ø 1,25 for natural gas
32.1	0003UGE01011/0	E23-755	Nozzle Ø 0.75 for LPG
33	0013GUA03035/0	371273	Gasket 32 x 32 x 2 gas valve
34	5018025	372851	Gasket 18.5 x 11.6 x 2
35	5018030	372867	Gasket 24 x 15 x 2
36	0019CUR06005/1		Elbow header
37	0019PR005005/0		Flue extension duct complete
38	0019TER06005/1		Flue duct and terminal complete
39	0019TER06010/0	E23-753	Vertical Flue Terminal Complete
40	0001MAN06005/0		Bottom panel
41	0014GUA06010/0		Flue gasket dm 100
42	0014GUA06005/0		Flue gasket dm 60
43	0014GUA06015/0		Flue gasket dm 80
44	0019SDO06005/0		Twin header
43	1015PAN06005/0	E23-737	Insulation pads set

Chartists Way, Morley, Leeds, LS27 9ET

Telephone : 0044(0)113 252 7007
Tfax : 0044(0)113 238 0229
Website : www.ravenheat.co.uk
E-mail : sales@ravenheat.co.uk

Ravenheat reserves the right to make changes and improvements in our products which may affect the accuracy of the information contained in thi leaflet.

The code of practice for the installation, commissioning & servicing of gas central heating

Installation, Commissioning and Service Record Log Book

CUSTOMER DETAILS

NAME

ADDRESS **TEL No.**

IMPORTANT

1. Please keep the Log Book in a safe place for future reference.
2. This Log Book is to be completed in full by the competent person(s) who commissioned the boiler and associated equipment and then handed to the customer. When this is done, the Log Book is a commissioning certificate that can be accepted as evidence of compliance with the appropriate Building Regulations.
3. Failure to install and commission this appliance to the manufacturer's instructions may invalidate the warranty. The above does not affect your statutory rights.

INSTALLER & COMMISSIONING ENGINEER DETAILS

INSTALLER DETAILS

COMPANY NAME **INSTALLATION DATE**

ADDRESS **TEL No.**

INSTALLER'S NAME

CORGI REGISTRATION DETAILS **REG No.** **CORGI ID SERIAL No.**

COMMISSIONING ENGINEER (IF DIFFERENT)

NAME **COMMISSIONING DATE**

ADDRESS **TEL No.**

CORGI REGISTRATION DETAILS **REG No.** **CORGI ID SERIAL No.**

APPLIANCE & CONTROL DETAILS

BOILER

MAKE AND MODEL

APPLIANCE SERIAL No. **SEDBUK No.** ☐ **%**

LOCATION **NEW SISTEM** ☐ **or REPLACEMENT BOILER** ☐

CONTROLS

To comply with the Building Regulations, each section must have a tick in one or other of the boxes.

REQUIREMENT	MEASURES PROVIDED			
1. TIME AND TEMPERATURE CONTROL TO HEATING	ROOM STAT & PROGRAMMER/TIMER	☐	PROGRAMMABLE ROOMSTAT	☐
2. TIME AND TEMPERATURE CONTROL TO HOT WATER	CYLINDER STAT & PROGRAMMER/TIMER	☐	COMBI BOILER	☐
3. HEATING ZONE VALVES	FITTED	☐	NOT REQUIRED	☐
4. THERMOSTATIC RADIATOR VALVES	FITTED	☐		☐
5. AUTOMATIC BYPASS TO SYSTEM	FITTED	☐	NOT REQUIRED	☐
6. BOILER INTERLOCK	PROVIDED	☐		☐

PLEASE FOLLOW THE INSTALLATION AND COMMISSIONING INSTRUCTIONS IN THE INSTALLATION MANUAL SUPPLIED WITH THE EQUIPMENT

COMISSIONING PROCEDURE INFORMATION

FOR ALL BOILERS

HAS THE SYSTEM BEEN FLUSHED IN ACCORDANCE WITH THE BOILER MANUFACTURER'S INSTRUCTIONS? **YES** ☐ **NO** ☐ **WHAT WAS THE CLEANSER USED?**

HAS AN INHIBITOR BEEN USED? **YES** ☐ **NO** ☐

WHICH INHIBITOR WAS USED?

For the central heating mode, measure and record:

HEAT INPUT ☐ **kW**

BURNER OPERATING PRESSURE ☐ **mbar**

CENTRAL HEATING FLOW TEMPERATURE ☐ **°C**

CENTRAL HEATING RETURN TEMPERATURE ☐ **°C**

FOR COMBINATION BOILERS ONLY

HAS A WATER SCALE REDUCER BEEN FITTED? **YES** ☐ **NO** ☐

WHAT TYPE OF SCALE REDUCER HAS BEEN FITTED?

The content of this Log Book has been produced in consultation with

DTLR

© CENTRAL HEATING INFORMATION COUNCIL

Benchmark is supported by

CORGI

For the domestic hot water mode, measure and record:

HEAT INPUT		**kW**
MAXIMUM BURNER OPERATING PRESSURE		**mbar**
MAXIMUM OPERATING WATER PRESSURE		**bar**
COLD WATER INLET TEMPERATURE		**°C**
HOT WATER OUTLET TEMPERATURE		**°C**
WATER FLOW RATE AT MAXIMUM SETTING		**lts/min**

FOR CONDENSING BOILERS ONLY

HAS THE CONDENSATE DRAIN BEEN INSTALLED IN ACCORDANCE WITH THE MANUFACTURER'S INSTRUCTIONS? **YES** ☐ **NO** ☐

FOR ALL INSTALLATION

DOES THE HEATING AND HOT WATER SYSTEM COMPLY WITH THE APPROPRIATE BUILDING REGULATIONS?	**YES** ☐
HAS APPLIANCE AND ASSOCIATED EQUIPMENT BEEN INSTALLED AND COMMISSIONED IN ACCORDANCE WITH THE MANUFACTURER'S INSTRUCTIONS?	**YES** ☐
HAVE YOU DEMONSTRATED THE OPERATION OF THE APPLIANCE AND SYSTEM CONTROLS TO THE CUSTOMER?	**YES** ☐
HAVE YOU LEFT ALL THE MANUFACTURER'S LITERATURE WITH THE CUSTOMER?	**YES** ☐

COMPETENT PERSON'S SIGNATURE **CUSTOMER'S SIGNATURE**

(To confirm demonstrations of equipment and receipt of appliance instructions)

SERVICE INTERVAL RECORD

It is recommended that your heating system is serviced regularly and that your service engineer completes the appropriate Service Interval Record below.

SERVICE PROVIDER

Before completing the appropriate Service Interval Record below, please ensure you have carried out the service as described in the boiler manufacturer's instructions and in compliance with The Gas Safety Regulations.
Always use the appliance manufacturer's specified spare part when replacing gas controls.

SERVICE 1 **DATE:**
ENGINEER NAME
COMPANY NAME
TEL No.
CORGI ID SERIAL No.
COMMENTS
SIGNATURE

SERVICE 2 **DATE:**
ENGINEER NAME
COMPANY NAME
TEL No.
CORGI ID SERIAL No.
COMMENTS
SIGNATURE

SERVICE 3 **DATE:**
ENGINEER NAME
COMPANY NAME
TEL No.
CORGI ID SERIAL No.
COMMENTS
SIGNATURE

SERVICE 4 **DATE:**
ENGINEER NAME
COMPANY NAME
TEL No.
CORGI ID SERIAL No.
COMMENTS
SIGNATURE

SERVICE 5 **DATE:**
ENGINEER NAME
COMPANY NAME
TEL No.
CORGI ID SERIAL No.
COMMENTS
SIGNATURE

SERVICE 6 **DATE:**
ENGINEER NAME
COMPANY NAME
TEL No.
CORGI ID SERIAL No.
COMMENTS
SIGNATURE

SERVICE 7 **DATE:**
ENGINEER NAME
COMPANY NAME
TEL No.
CORGI ID SERIAL No.
COMMENTS
SIGNATURE

SERVICE 8 **DATE:**
ENGINEER NAME
COMPANY NAME
TEL No.
CORGI ID SERIAL No.
COMMENTS
SIGNATURE

SERVICE 9 **DATE:**
ENGINEER NAME
COMPANY NAME
TEL No.
CORGI ID SERIAL No.
COMMENTS
SIGNATURE

SERVICE 10 **DATE:**
ENGINEER NAME
COMPANY NAME
TEL No.
CORGI ID SERIAL No.
COMMENTS
SIGNATURE

When all of the above services have been completed, please contact your Service Engineer for an additional service interval record sheet.

GBLB Second Edition 01.03.02