RAVENHEAT®
MANUFACTURING LIMITED

CONDENSING FANNED FLUE BOILER CSI SYSTEM

WITHOUT TIMER

NATURAL GAS (G20) (I_{2H}) G.C.N° 47 581 01 - CSI

LPG (G30-G31) (I_{3+}) G.C.N° 47 581 03 - CSI

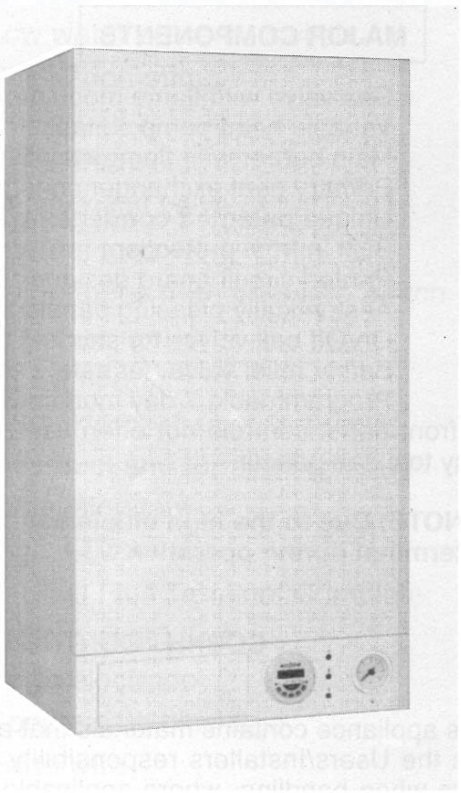

Tested, certified and service listed

Listed by The United Kingdom Water Fitting Byelaws Scheme

CE 0087 ISO 9001

WITH TIMER

NATURAL GAS (G 20) (I_{2H}) G.C. N° 47 581 02 - CSI

LPG (G 30 - G 31) (I_{3+}) G.C.N° 47 581 04 - CSI

INSTALLATION AND SERVICING INSTRUCTIONS TO BE LEFT WITH USER

benchmark™

The code of practice for the installation, commissioning & servicing of central heating systems

Technical and illustrative data are not binding and can be modified without prior notice. The descriptions and illustrations in the present booklet are for guideline purposes only.

RAVENHEAT MANUFACTURING LTD., CHARTISTS WAY, MORLEY, LEEDS, LS27 9ET. -TELEPHONE (0113) 252 7007

CONDENSING SYSTEM INNOVATION AUTOMATIC MODULATING CENTRAL HEATING BOILER

This new super high efficient turbo-modulating boiler is designed to meet heating requirements at super high efficiency, unheard of only a few years ago.

POSITION

The appliance is extremely versatile as it can be fitted in almost any room. The appliance is room sealed, there is no contact between combustion chamber and living accommodation. This guarantees maximum safety and efficiency. Indeed, our depression/combustion front cover has been designed to fit, achieving maximum air tight seal using screw down fasteners at 15 cm. This should not hinder service of the appliance, but does ensure maximum efficiency and safety - something which Ravenheat take great pride in.

Each boiler has been designed and manufactured in our modern plant to exacting IS0 9001 discipline, all boilers carry full CE marking of approval. Technical sales and commercial service are available throughout the UK-This product is guaranteed by Ravenheat Manufacturing, Chartists Way, Morley, LEEDS, LS27 9ET. Telephone No (0113) 252 7007.

BASIC COMPONENTS - (See figure 1)

Guarantee is a full 12 months from date of purchase providing the appliance has been fitted in accordance with these instructions and relevant codes of practice.

MAJOR COMPONENTS

Gas valve with flame modulator.
Variable head pump suitable for any type of central heating system.
Main burner with flame stabiliser designed to operate under all thermal conditions.
Primary heat exchanger constructed from copper.
Unique **patented condensing heat exchanger** for high thermal flue transfer gases to water.
Built in frost protection.
Printed circuit board designed to connect to room stat cylinder stat, and/or timer/frost stat.
Aesthetically pleasing panels and controls.
On/Off ball valves for shutting off gas and central heating.
Safety relief valve (for safety discharge).
Programmable 7 day module with digital display (optional).

All front panel controls not often used have been hidden. This achieves simplicity of operation with easy to clean panels.

NOTE: Due to the high efficiency of this boiler a plume of water vapour will form at the flue terminal during operation.

COSHH - CONTROL OF SUBSTANCES HARMFULTO HEALTH

IMPORTANT

This appliance contains materials that are indicated below.
It is the Users/Installers responsibility to ensure that the necessary personal protective clothing is worn when handling, where applicable, the pertinent parts that contain any materials that could be interpreted as being injurious to health and safety.

WARNING When installing the appliance, care should be taken to avoid any possibility of injury when handling sheet metal parts.

GENERAL INFORMATION:
GLUES AND SEALANTS - exercise caution - if these are still in liquid form.
INSULATION PADS, CERAMIC FIBRE - may be harmful if inhaled, may be irritating to skin, eyes, nose and throat.
When handling keep dust generation to a minimum, avoid inhaling and contact with skin or eyes.
When disposing of the product keep dust generation to a minimum and ensure that parts are securely wrapped.
When servicing avoid inhalation by using a vacuum cleaner or in conjunction with other tools.
After handling wash hands and other exposed parts.
RAVENHEAT use only high quality material for production of this product, in an effort to protect the environment components should be re-cycled.

TABLE OF CONTENTS

SECTIONS:		PAGE:
1	INTRODUCTION	5
2	DESIGN PRINCIPLES AND OPERATING SEQUENCE	5
3	TECHNICAL DATA	7 - 8
4	GENERAL REQUIREMENTS	9
5	INSTALLATION	14
6	COMMISSIONING	27
7	SERVICING INSTRUCTIONS	30
8	FAULT FINDING	42
9	ELECTRICAL SYSTEM DIAGRAM	44
10	EXPLODED PARTS DIAGRAM	49
11	LIST OF SPARE PARTS	50

GENERAL LAYOUT

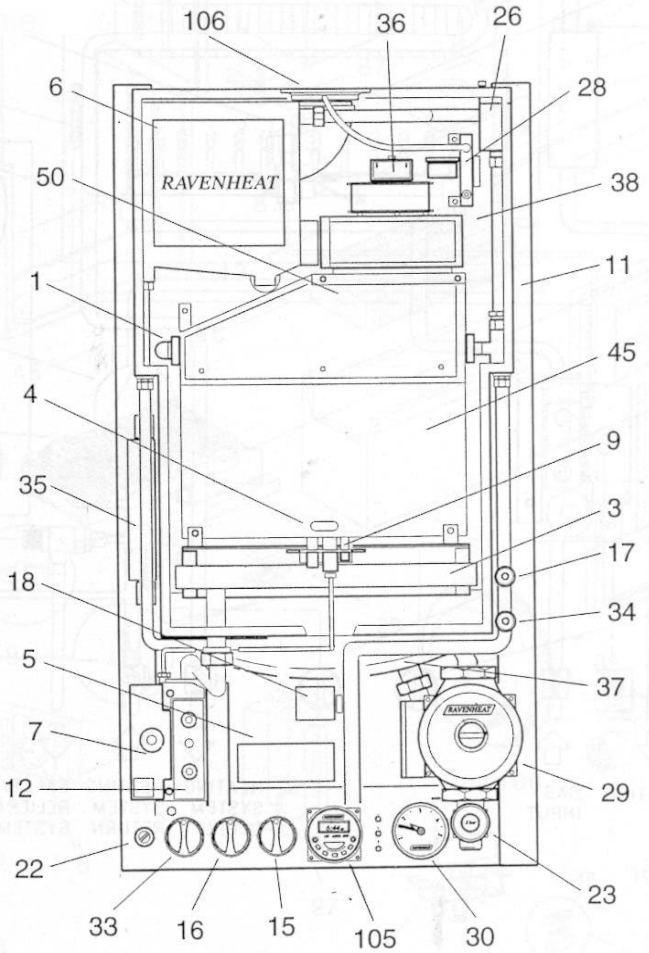

Fig. 1

KEY

1 - Heat exchanger
3 Burner
4 - Ignition pilot burner
5 - Interface board
6 Condensing heat exchanger
7 - Ignition board
9 - Ignition electrode
11 - Frame
12 Modulating gas valve
15 - Heating control
16 - D.H.W. control
17 - D.H.W. sensor
18 - Pressure switch (heating circuit)
22 - Overheat cut off thermostat
23 - Safety relief system
26 - Auto air vent valve
28 -Air pressure switch
29 - Circulation pump
30 -Water pressure gauge
33 - Main switch
34 - C.H. sensor
35 - Condensing trap
36 - Fan
37 - Expansion tank
38 Sealed chamber
45 Combustion chamber
50 - Flue gas exhaust hood
105 - Timer
106 Flue restriction ring

OPERATING SCHEME

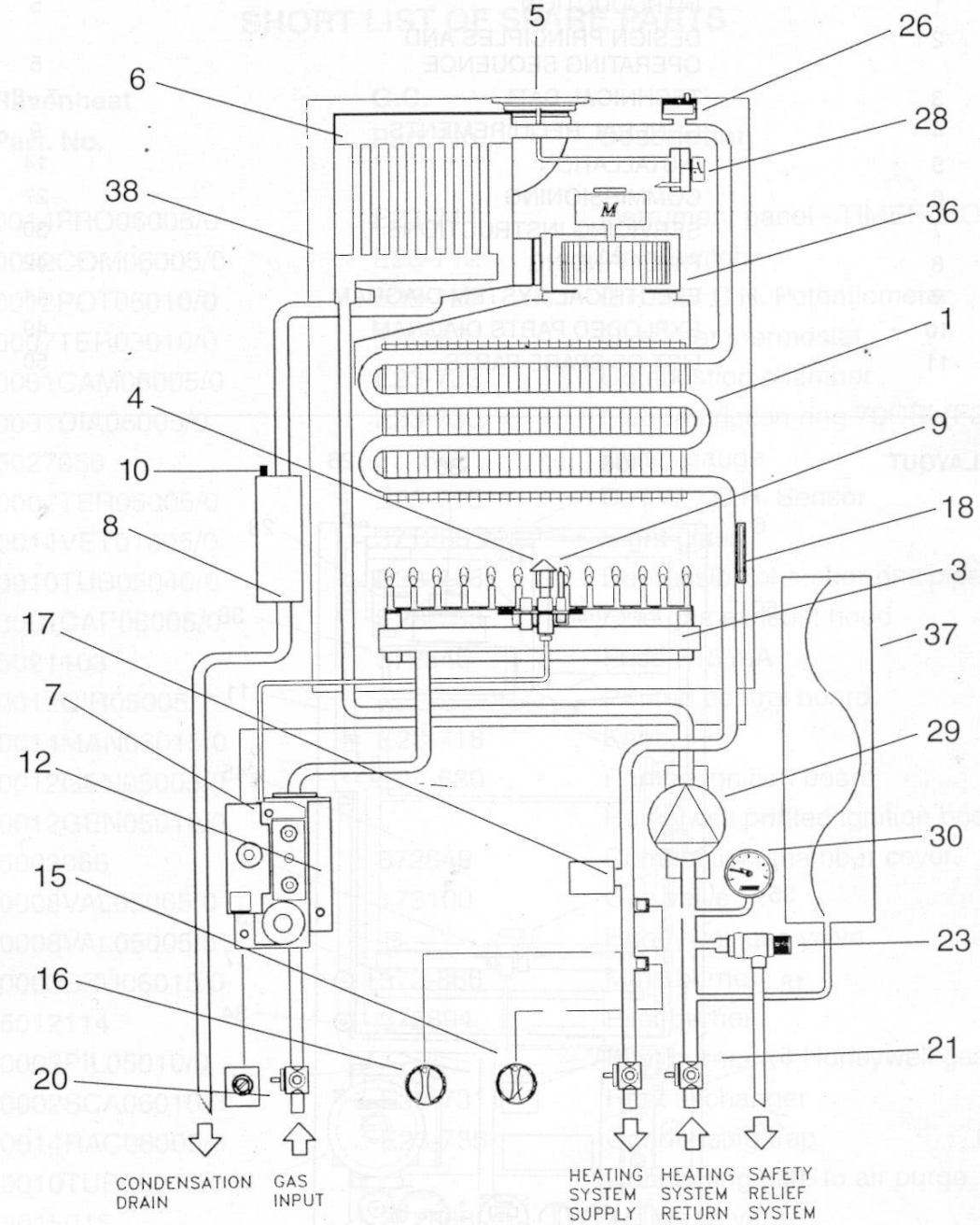

Fig. 2

KEY

1 - Heat exchanger
3 - Burner
4 - Ignition pilot burner
5 - Flue restriction ring
6 - Condensing heat exchanger
7 - Electronic ignition
8 - Condensing trap
9 - Ignition electrode
10 - Condensate sensor
12 - Modulating gas valve
15 - Heating control potentiometer
16 - Hot water control potentiometer
17 -Water pressure switch
18 - Overheat cut-off thermostat
20 - Gas service cock
21 - Compression ball valves
23 - Safety relief system
26 - Auto air vent valve
28 - Air pressure switch
29 - Circulating pump
30 -Water pressure gauge
36 - Fan
37 - Expansion tank
38 - Sealed chamber

SECTION 1 INTRODUCTION

1.1 The Ravenheat CSI System boiler is a central heating system boiler which incorporates a circulating pump, expansion vessel, safety **valve,** pressure gauge and electronic ignition. The boiler is equipped with a front cover which can be removed for servicing. The data badge is placed on the lower left hand side of the frame.

1.1.1 The Ravenheat CSI System boiler has been carefully developed to utilise best use of energy for super high efficiency, it can be used as a condensing system heating only boiler or can be used in the design of a 'Y' or 's" plan heating system incorporating a hot water cylinder, this makes best use of the built in energy management system to control all modes of operation.

1.1.2 The boiler comes with a built in single chanel 7 day digital timer, this can be utilised to control domestic hot water timed requirements and if a separate timer for heating is required then it is recommended to fit a room thermostat/timer is available from Ravenheat Manufacturing.

1.1.3 This appliance is designed for use with a seal system only.

1.1.4 The provision of stored domestic hot water is possible by the addition of an indirect cylinder with 'Y' or 'S' plan controls.

1.2 Fig. 1 illustrates the general layout of components.
Fig. 2 illustrates the operating principles described in section 2.

SECTION 2

2.1 **DESCRIPTION OF CONTROL SYSTEM AND SEQUENCE OF OPERATION**

2.2 Domestic hot water mode (if installed)
When the appliance mains neon is switched on with the heating circuit charged with water above 1 bar with a demand from the timer and cylinder stat for hot water the boiler will function in the following sequence.

2.2.1 The pump starts.
The control board sensors.
The fan operates via the pressure switch and sends a signal back to the ignition board that the fan is running at maximum speed.

2.2.2 The spark ignition system is powered which in turn commences the spark igniter to operate and light the burner.
At this point the ignition board opens the first step of the gas valve to light the pilot/burner.

2.2.3 When the electrode/sensor senses the signal of the pilot/burner, it opens the second stage of the gas valve via the ignition board on minimum power. Upon the second valve opening the spark igniter stops.

2.2.4 From the minimum gas rate setting the boiler increases to a maximum permissible pressure and will remain at its maximum required power until its maximum regulated temperature.

2.2.5 When the cylinder stat and or the DHW timer is satisfied the boiler will go to rest mode the main burner is shut down and the pressure switch will return back to its rest mode. The pump overrun will operate the pump for about 1 minute after that the pump will stop.

Note
However, if there is a demand for heating the boiler continue to operate to satisfy this demand, rather than shut down, see 2.2.6.

2.2.6 Central heating mode

2.2.7 If the main neon switch is on with a demand for heat to supply radiators, etc., with the heating circuit fully charged so as to operate the low water sensor device the boiler will start but with a slightly differing time delay in that it will start on minimum and remain at this level for about 1 minute after which the flame will lift to its maximum setting as governed by a potentiometer range rate the heating circuit between maximum and minimum power.

2.2.8 On the control panel this potentiometer (thermostat) controls the temperature. One is for domestic hot water and the other for heating.

2.2.9 The boiler is fitted with an anti-cycling device on the control board. This delays the boiler from re-firing over a 2.5 minute period when in heating mode. The domestic hot water will always take priority and is unaffected by the anti-cycling device.

GENERAL FUNCTION

2.3 Central Heating Mode

2.3.1 A potentiometer installed on the electric circuit board permits regulation of the boiler to partial heating requirements, between the factory settings.

2.3.2 Air is drawn by the fan for combustion

2.3.3 The fan also forces exhaust gas through the flue to the outside, this creates a lesser pressure in the sealed combustion chamber, thus sucking in combustion air, through the inlet duct.

2.3.4 The boiler water temperature is automatically controlled by a built in thermostat.

2.3.5 Interior space temperature is set by the room thermostat to be installed in the heating system. The boiler already carries connection terminals for this thermostat, as well as for a timeclock. The burner continues to operate until it is stopped by the timer or one of the thermostats.

2.3.6 When the internal C.H. temperature sensor intervene the main burner shuts down. The fan stops but the pump continues to operate.

2.3.7 When the room thermostats and or timer intervene the main burner shuts down. The fan stops and the pump turns off via the pump overrun.

2.3.6 The condensate trap is fitted with a blockage safety sensor. This prevents the boiler operating should there be a blockage in the condensate discharge trap.

3.1 SAFETY DEVICE

3.1.2 An overheat cut off thermostat set slightly higher than the high limit thermostat acts to turn off the burner to resetable "lockout" (Fig. 50) 3.

3.1.3 A safety valve is fitted on the central heating circuit set at 43 psi (3 bar).

3.2.1 A heating circuit (low water) pressure switch is set at 0.4 bar.

OVERALL DIMENSION

Fig. 3

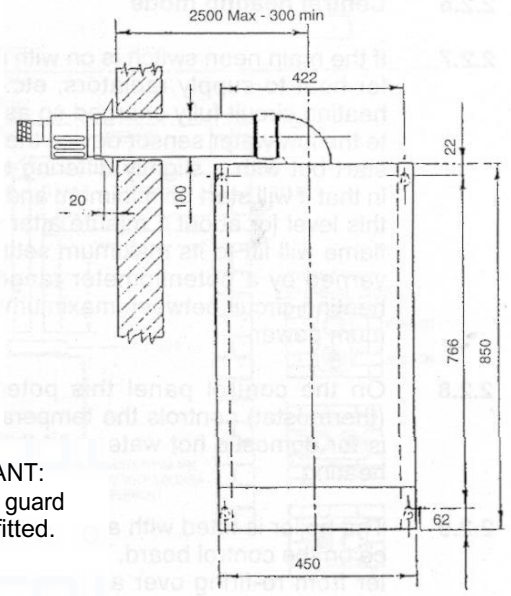

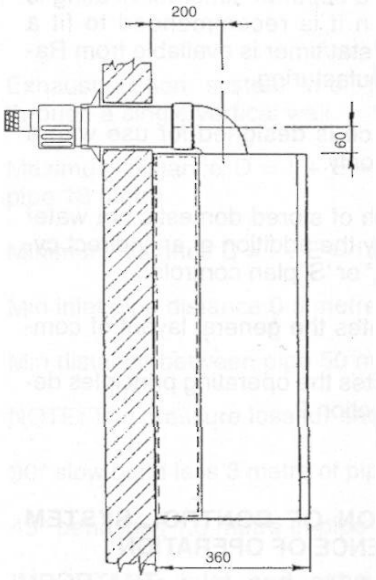

IMPORTANT:
Terminal guard must be fitted.

AVAILABLE PUMP HEAD
Fig. 4

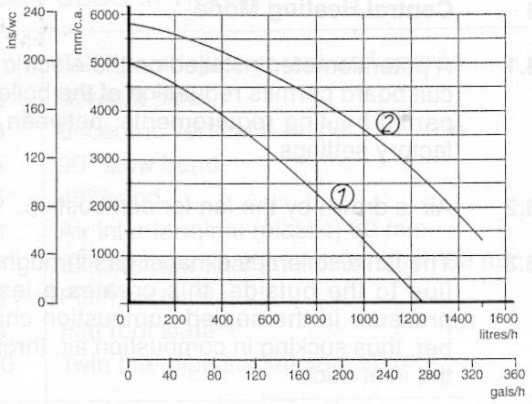

PRESSURE DROP ACROSS APPLIANCE
Fig. 5

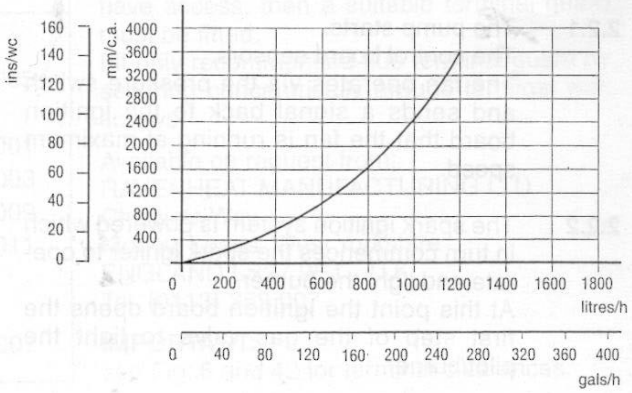

SECTION 3 TECHNICAL DATA

TABLE 1

NATURAL GAS (G 20) I_{2H}

NOMINAL HEAT INPUT NET		24.8 kW	(84,500 Btu/h)
MINIMUM HEAT INPUT NET		13.0 kW	(44,500 Btu/h)
NOMINAL HEAT OUTPUT		23.8 kW	(81,200 Btu/h)
NOMINAL HEAT OUTPUT CONDENSING		25.6 kW	(87,200 Btu/h)
MINIMUM HEAT OUTPUT		11.7 kW	(40,100 Btu/h)
MINIMUM HEAT OUTPUT CONDENSING		13.4 kW	(45,700 Btu/h)
GAS RATE	max	2.5 m^3S/h	(88.25 ft^3/h)
AFTER 10 MINUTES	min	1.3 m^3S/h	(45.9 ft^3/h)
INLET PRESSURE	20 mbar	(8.0 in w.g.)	
BURNERPRESSURE	max	10.5 mbar	(4.2 in w.g.)
	min	2.0 mbar	(0.8 in w.g.)
MAIN BURNER INJECTORS	Nr. 13 x 1.25		
PILOT BURNER INJECTOR	0.27 x 2 HOLES		
ELECTRICAL SUPPLY	230V-50HZ		
POWER CONSUMPTION	16OW		
EXTERNAL FUSE RATING	3A		
INTERNAL FUSE	315 mA - 2A - 4A	(20 mm to BS 4265)	
DRY WEIGHT	kg 46		
WATER CONTENT C.H.	litre 1.O		
GAS SUPPLY CONNECTION	1/2" RC		
FLOW CONNECTION C.H.	22 mm compression isolating valve		
RETURN CONNECTION C.H.	22 mm compression isolating valve		
SAFETY DISCHARGE C.H.	15 mm copper pipe		
CONDENSATION DRAIN	3/4" (21.5 mm) push fit over flow		
MAX COLD WATER CAPACITY WITHOUT ADDITIONAL EXPANSION VESSEL			110 LITRE
SEALED WATER SYSTEM C.H.			
MAX PRESSURE PHS		2.5 bar	(35.6 p.s.i.)
MINIMUM WORKING PRESSURE		0.5 bar	(7.35 p.s.i.)
8 LITRES EXPANSION VESSEL PRE-CHARGE-PRESSURE		0.5 bar	(7.35 p.s.i.)
CENTRAL HEATING OPERATING TEMPERATURE MAX 85 °C			
MIN 45 °C			
DESIGN FLOW RATE 1023 l/h (225 gals/h) 20 °C RISE			
MINIMUM FLOW RATE C.H. 503 l/h (111 gals/h)			
FLUE OUTLET NOM. DIAMETER 100 mm specially supplied with boilers			
DESTINATION: AT. CH. DK. ES. FI. GB. IE. IT. PT. SE.			
FLUE TYPE - C_{12} - C_{32} - C_{52}			
CATEGORY I_{2H}		NOX 2	

TABLE 1/A

LPG (G 30 - G 31) I_{3+}

NOMINAL HEAT INPUT NET				24.8 kW			(84,500 Btu/h)
MINIMUM HEAT INPUT NET				13.0 kW			(44.500 Btu/h)
NOMINAL HEAT OUTPUT				24.1 kW			(82,100 Btu/h)
NOMINAL HEAT OUTPUT CONDENSING				25.6 kW			(87,200 Btu/h)
MINIMUM HEAT OUTPUT				11.7 kW			(40,100 Btu/h)
MINIMUM HEAT OUTPUT CONDENSING				13.4 kW			(45.700 Btu/h)
GAS RATE	max	G 31	0.95 m^3S/h	(33.53 ft^3/h)	G 30	0.79 m^3/h	(27.89 ft^3/h)
AFTER 10 MINUTES	min		0.5 m^3S/h	(17.65 ft^3/h)		0.4 m^3/h	(14.12 ft^3/h)
INLET PRESSURE	37 mbar G 31			28 - 30 mbar	G 30		
BURNER	max	G 31	35.4 mbar	(14.0 in w.g.)	G 30	27.3 mbar	(10.9 in wg.)
PRESSURE	min		7.3 mbar	(2.92 in w.g.)		7.0 mbar	(2.8 in w.g.)
MAIN BURNER INJECTORS	Nr. 13 x 0.75						
PILOT INJECTOR	0.22 x 1 HOLE						
ELECTRICAL SUPPLY	230V-50HZ						
POWER CONSUMPTION	160W						
EXTERNAL FUSE RATING	3A						
INTERNAL FUSE	315 mA - 2A - 4A			(20 mm to BS 4265)			
DRY WEIGHT	kg 46						
WATER CONTENT C.H.	litre 1 .O						
GAS SUPPLY CONNECTION			1/2" RC				
FLOW CONNECTION C.H.			22 mm compression isolating valve				
RETURN CONNECTION C.H.			22 mm compression isolating valve				
SAFETY DISCHARGE C.H.			15 mm copper pipe				
CONDENSATION DRAIN			3/4" (21.5 mm) push fit over flow				
MAX COLD WATER CAPACITY WITHOUT ADDITIONAL EXPANSION VESSEL							110 LITRES
SEALED WATER SYSTEM C.H.							
MAX PRESSURE PMS				2.5 bar			(35.6 p.s.i.)
MINIMUM WORKING PRESSURE				0.5 bar			(7.35 p.s.i.)
8 LITRES EXPANSION VESSEL PRE-CHARGE-PRESSURE				0.5 bar			(7.35 p.s.i.)
CENTRAL HEATING OPERATING TEMPERATURE MAX 85 °C							
MIN 45 °C							
DESIGN FLOW RATE 1023 l/h (225 gals/h) 20 °C RISE							
MINIMUM FLOW RATE C.H./503 Lts/h (111 gals/h)							
FLUE OUTLET NOM. DIAMETER 100 mm specially supplied with boilers							
DESTINATION: BE. CH. ES. FR. GB. IE. IT. PT.							
FLUE TYPE - C_{12} - C_{32} - C_{52}							
CATEGORY I_{3+}				NOX 2			

SECTION 4 GENERAL REQUIREMENTS

4.0 SAFETY

Gas Safety (Installation and USE) Regulations, 1994, and amendments 1996.

It is law that all gas appliances are installed and serviced by a Corgi registered installer (identified by ❀) in accordance with the above regulations. Failure to install appliances correctly could lead to prosecution, It is in your own interest, and that of safety, to ensure the law is complied with. Check the boiler and flue is the correct type for installation.

The installation of the boiler MUST also be in accordance with the latest I.E.E (BS 7671) Wiring Regulations, local building regulationsbye-laws of the local water authority, the building regulations and the Building standards (Scotland) and any relevant requirements of the local authority.

4.1 GENERAL INFORMATION

Both the user and the manufacturer rely heavily on the installer, whose job it is to install the combination boiler and connect it to a correctly designed heating system. Acquaint yourself with the British Standards concerning installation requirements. If you need advice on any points your Ravenheat Technical Services Office would be pleased to help. It is recommended that tools suitable for brass fittings are used, and have a capability to accomodate hexagon sizes up to 50 mms.

CODES OF PRACTICE/Ret Documents

Detailed recommendations are contained in the following British Standard Codes of Practice:

BS. 6891 Low pressure installation pipes.

BS. 6798 Installation of gas fired hot water boilers of rated input not exceeding 60 kW.

BS. 5449 Forced circulation hot water systems.

BS. 5546 Installation of gas hot water supplies domestic purposes (2nd Family Gases).

BS. 544O:1 Flues (for gas appliances of rated input not exceeding 60 kW).

BS. 544O:2 Ventilation (for gas appliances of rated input not exceeding 60 kW).

DD 189:1990 Discharge of condensate

Health & Safety Document No. 635

The Electricity at Work Regulations, 1989.

The manufacturer's notes must NOT be taken, in any way, as overriding statutory obligations.

IMPORTANT. These appliances are CE certificated for safety and performance. It is, therefore, important that no external control devices e.g. flue dampers, economisers etc., are directly connected to this appliance unless covered by these Installation and Service Instructions or as otherwise recommended by Ravenheat in writing. If in doubt please enquire.

Any direct connection of a control device not approved by Ravenheat could invalidate the certification and the normal appliance warranty. It could also infringe the Gas Safety regulations and the above regulations.

NOTE: The Ravenheat CSI combination boiler has been tested and examined by BG, and is certified to comply with PrEN 483 and BS EN 625.

Manufacturers instructions must NOT be taken in any way as overriding statutory obligations.

If in doubt on any point please consult Ravenheat Manufacturing Ltd.

4.2 LOCATION OF BOILER

4.2.1 Siting of Ravenheat CSI System Combi Boiler must be as follows. The position of installation should be within the building, unless otherwise protected by suitable enclosure.

Adequate space for installation, servicing and air circulation around boiler must be allowed for.

The Ravenheat CSI System Combi Boiler must be fitted on a flat and vertical wall capable of adequately supporting the weight of the boiler and any ancillary equipment.

The appliance may be installed on a combustible wall subject to the requirements of the Local Authority and Building Regulations.

LPG versions of this appliance shall not be installed in cellars or basements.

4.3 CLEARANCES AROUNDTHE APPLIANCE

4.3.1 The following minimum free spaces, required for installation inspection and servicing, must be left around the boiler

18 inches (450 mm) in front
5 inches (125 mm) above
6 inches (150 mm) below
0.2 inches (5 mm) on each side
1 inch (25 mm) in front when installed in a cupboard.

4.4 IMPORTANT NOTICE

4.4.1 If the combination boiler is to be fitted in a timber framed building it should be fitted in accordance with the British Gas Publication Guide for Gas Installations in Timber Frame Housing Reference DM2. If in doubt advice must be sought from the local gas supplier.
The combination boiler may be installed in any room or internal space, although particular attention is drawn to the requirements of the current I.E.E. Wiring Regulations, and in Scotland the electrical provisions of the Building Regulations applicable in Scotland, with respect to the installation of the combination boiler in a room or internal space containing a bath or shower.
Where a room sealed appliance is installed in a room containing a bath or shower, any electrical switch or appliance control, utilising mains electricity should be so situated that it cannot be touched by a person using a bath or shower.
A compartment used to enclose the combination boiler MUST be designed and constructed specifically for this purpose. An existing cupboard, or compartment, may be used provided it is modified accordingly.
Samples of the CSI combination boiler have been examined by B.G. Technology Notified Body, and is certified to comply with the essential requirements of the Gas Appliance Directive 90/396/EEC, the Low Voltage Directive 72/23/EEC and shows compliance with the Electro Magnetic Compatibility Directive 89/336/EEC and are therefore permitted to carry the CE Mark.

The appliance has been tested and approved by the WRc as meeting the requirements of G3 and L of the Building regulations and water Bylaws Scheme - Approved Products.

4.5 GAS SUPPLY

4.5.1 A gas meter is connected to the service pipe by the Local Gas Region or the Local Gas Region contractor. An existing meter should be checked preferably by the Gas Region to ensure that the meter is adequate to deal with the rate of gas supply required for all appliances it serves. Installation pipes should be fitted in accordance with BS 6891. Pipework from the meter to the boiler must be of adequate size (22 mm) min. To within at least 3 metre of the boiler (15 mm) min. can then be used for remaining pipe work to the appliance. A smaller size than the boiler inlet gas connection should not be used. The complete installation must be tested for soundness as described in the above Code.
N.B. if the gas supply for the boiler serves other appliances ensure an adequate supply is available both to the boiler and the other appliances when they are in use at the same time.

4.6 FLUE SYSTEM

4.6.1 The terminal should be located where dispersal of combustion products is not impeded and with due regard for the damage or discolouration that might occur to building products in the vicinity (see fig. 6).
The terminal must not be located in a place where it is likely to cause a nuisance.
In cold and/or humid weather water vapour may condense on leaving the flue terminal. The effect of such steaming must be considered.
The terminal must not be closer than 25 mm. (1 in) to any combustible material. For protection of combustibles, refer to BS 5440.1.
Where a flue terminal is installed less than 1000 mm. from a plastic, or painted gutter; or 500 mm from painted eaves, an aluminium shield 1000 mm. long, should be fitted to the underside of the gutter or painted surface.

Pluming will occur at the terminal so, where possible, terminal positions which could cause a nuisance should be avoided.
The flue must be installed in accordance with the recommendations of BS 5440: Part 1.

IMPORTANT NOTES

For greater flue lengths see twin flue instructions.
Flue must be positioned in a place not likely to cause a nuisance.

IMPORTANT: The following notes are intended for general guidance.

The boiler MUST be installed so that the terminal is exposed to external air.

It is important that the position of the terminal allows the free passage of air across it at all times.

Minimum acceptable spacing from the terminal to obstructions and ventilation opening are specified in Fig. 6.

Note positions: Due *to the* **terminal** *design, installation is possible with clearances less than those specified in BS 5440, Part 1.*

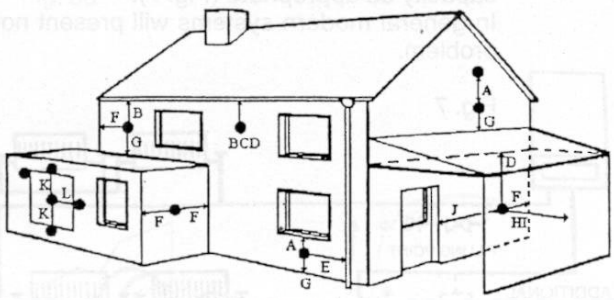

Fig. 6

Terminal position for fan assisted boiler

(minimum distance)		mm	
A	- Directly below an open window or other opening (e.g. air brick)	300	
B	- Below gutters, soil pipes or drain pipes	25	From a terminal guard
C	- Below eaves	25	
D	- Below balconies or car port roof	25	
E	- From vertical drain pipes and soil pipes	25	
F	- From internal or external corners	25	
G	- Above ground or below balcony level	300	
H	- From a surface facing a terminal	600	
I	- From a terminal facing a terminal	1200	
J	- From an opening in the car port (e.g. door window) into dwelling.	1200	
K	- Vertically from a terminal on the same wall	1500	
L	- Horizontally from a terminal on the same wall	300	

NOTE: The flue must be terminated in a place not likely to cause a nuisance.

4.6.2 A concentric vertical flue kit is available, for flueing applications up to a maximun height of 4.0 metres.
For further details see vertical flue installation instructions.

4.7 **AIR SUPPLY**

4.7.1 The following notes are intended for general guidance.
The room sealed fan flued boiler does not require a permanent air vent for combustion air supply.
Where installed in a cupboard or compartment ventilation is not required.

CONDENSATE DRAIN

A condensate drain is provided on the boiler. This drain must be connected to a drainage point. All pipework and fittings in the condensate drainage system MUST be made of plastic - no other materials may be used.
Discharge of condensate DD 189:1990.

The drain outlet on the boiler is standard 3/4" (21.5 mm) push fit overflow pipe.
NOTE: Condensate drain pipework must never be less than 15 mm.

Important: any external runs must be carried out in 1 1/4 (32 mm) wastepipe.
A fall of 2.5° (45 mm/m) all runs must have.

4.8 **WATER CIRCULATION (central heating)**

4.8.1 Detailed recommendations are given in BS 6798 5449.1.1977 (for smallbore and microbore central heating systems). The following notes are given for general guidance.

4.8.2 **Pipework**
Copper tubing to BS 2871 1.1.1971 is recommended for water pipes. Jointing should be either with capillary soldered or with compression fittings.
Where possible pipes should have a gradient to ensure air is carried naturally to air release points and water flows naturally to drain taps. It should be ensured as far as possible that the appliance heat exchanger is not a natural collecting point for air. Except where providing useful heat, pipes should be insulated to prevent heat loss and to avoid freezing. Particular attention should be paid to pipes passing through ventilated spaces in roofs and under floors.

4.8.2.1 **SYSTEM DESIGN**
Fig. 6A illustrates typical heating only layout. Figs. 6B and 6C illustrate typical layout with 'Y' or 'S' plan system.

Fig. 6A

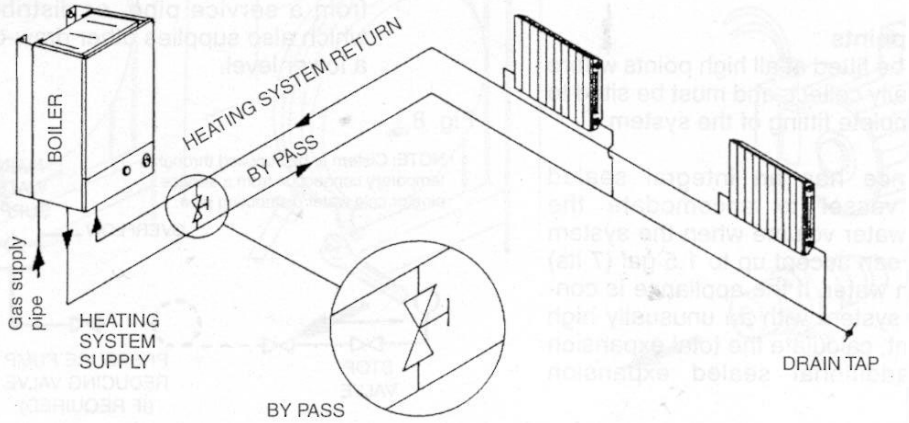

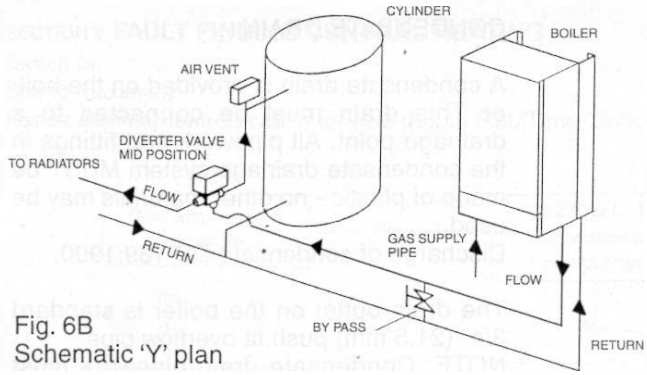

Fig. 6B
Schematic 'Y' plan

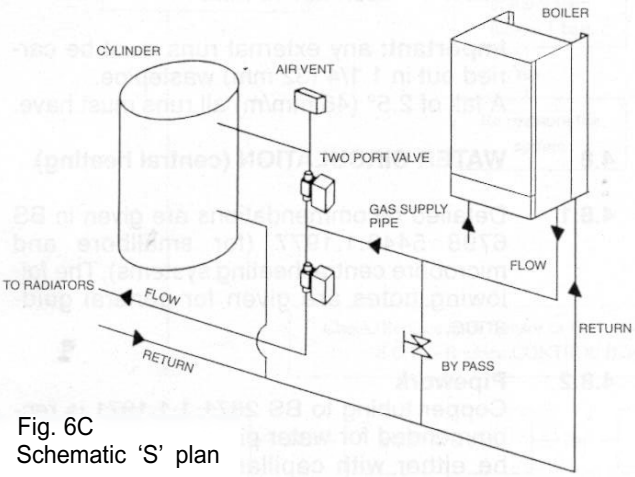

Fig. 6C
Schematic 'S' plan

4.8.3 The water through the appliance heat exchanger circuit must exceed the min. 1.84 gals/min. (503 lt/h) when the burner is firing. It is important to ensure that this rate is achieved when sections of the system are shut off either manually or by automatic controls. **Therefore a by-pass must be fitted to the system (15 mm min.) (Fig. 6A).** If the volume of circulating water is too low, the boiler water temperature will rise too rapidly. This could cause noise in the system or even cause the safety thermostat to trip.

4.0.4 **Draining tap**
These must be located in accessible positions to permit the draining of the whole system. The taps must be at least 15 mm nominal size and manufactured in accordance with BS 2870 1960.

4.8.5 **Air release points**
These must be fitted at all high points where air will naturally collect, and must be sited to facilitate complete fitting of the system.

4.8.6 The appliance has an integral sealed expansion vessel to accomodate the increase of water volume when the system is heated, It can accept up to 1.5 gal (7 lts) of expansion water. If the appliance is connected to a system with an unusually high water content, calculate the total expansion and add additional sealed expansion capacity as appropriate (Fig. 7).
In general modern systems will present no problem.

Fig. 7

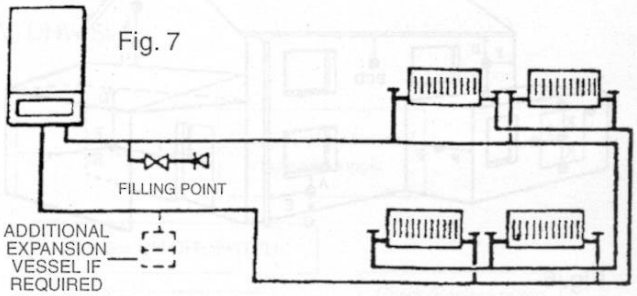

4.8.7 **Mains water feed: central heating**
There must be no direct connection to the mains water supply, even through a non-return valve, without the approval of the Local Water Authority.

4.8.8 **Permissible methods of filling**
Cistern method (Fig. 8).
The system may be filled by one of the following methods. Through a cistern used for no other purpose, via a ballvalve permanently connected directly to a service pipe and/or cold water distributing pipe. The static head available from the cistern should be adequate to provide the initial system design pressure.
The cold feed pipe from the cistern should include a non-return valve, and a stop-valve with an automatic air vent connected between them, with the stop valve being located, between the cistern and the automatic air vent. The stop valve may remain open during normal operation of the system, if automatic water make-up is required.
Booster pump method (Fig. 6).
The system may be filled through a self contained unit comprising of a cistern pressure **booster** pump if required and if necessary an automatic pressure reducing valve or flow restrictor. The cistern should be supplied through a temporary connection from a service pipe or cold water distributing pipe. The unit may remain permanently connected to the heating system to provide limited automatic water make up.
Mains topping up method (Fig. 9).
Here the temporary connection is supplied from a service pipe, or distributing pipe, which also supplies other draw-off points at a lower level.

Fig. 6

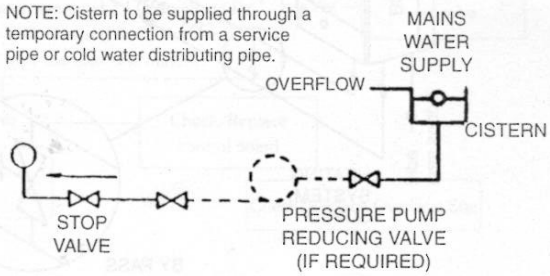

SIZING OF ADDITIONAL EXPANSION VESSELS: TABLE 3
Deduct from the value given in the table the 7 litre vessel supplied.

Safety valve setting (bar)	3.0								
Vessel charge pressure (bar)	0.5				1.0			1.5	
Initial system pressure (bar)	0.5	1.0	1.5	2.0	1.0	1.5	2.0	1.5	2.0
Total water content 01 system	EXPANSION VESSEL VOLUME (LITRES)								
Litres									
25	2.1	3.5	6.5	13.7	2.7	4.7	10.3	3.9	6.3
50	4.2	7.0	12.9	27.5	5.4	9.5	20.6	7.8	16.5
75	6.3	10.5	19.4	41.3	8.2	14.2	30.9	11.7	24.8
100	8.3	14.0	25.9	55.1	10.9	19.0	41.2	15.6	33.1
125	10.4	17.5	32.4	68.9	13.6	23.7	51.5	19.5	41.3
150	12.5	21.0	38.8	82.6	16.3	28.5	61.8	23.4	49.6
175	14.6	24.5	45.3	96.4	19.1	33.2	72.1	27.3	57.9
200	16.7	28.0	51.8	110.2	21.8	38.0	82.4	31.2	66.2
225	18.7	31.5	58.3	124.0	24.5	42.7	92.7	35.1	74.5
250	20.8	35.0	64.7	137.7	27.2	47.5	103.0	39.0	82.7
275	22.9	38.5	71.2	151.5	30.0	52.2	113.3	42.9	91.0
300	25.0	42.0	77.7	165.3	32.7	57.0	123.6	46.8	99.3
325	27.0	45.5	84.1	179.1	35.7	61.7	133.9	50.7	107.6
350	29.1	49.0	90.6	192.8	38.1	66.5	144.2	54.6	115.8
375	31.2	52.5	97.1	206.6	40.9	71.2	154.5	58.5	124.1
400	33.3	56.0	103.6	220.4	43.6	76.0	164.8	62.4	132.4
425	35.4	59.5	110.1	239.2	46.3	80.7	175.1	66.3	140.7
450	37.5	63.0	116.5	247.9	49.0	85.5	185.4	70.2	148.9
475	39.6	66.5	123.0	261.7	51.8	90.2	195.7	74.1	157.2
500	41.6	70.0	125.9	275.5	54.5	95.0	206.0	78.0	165.5
For system volumes other than those given above, multiply the system volume by the factor across	0.0833	0.140	0.259	0.551	0.109	0.190	0.412	0.156	0.331

Note: This pressure can be increased up to 1.5 bar to suit high static head situations. see item 10, other appliance components in the SERVICING INSTRUCTIONS.

Fig. 9

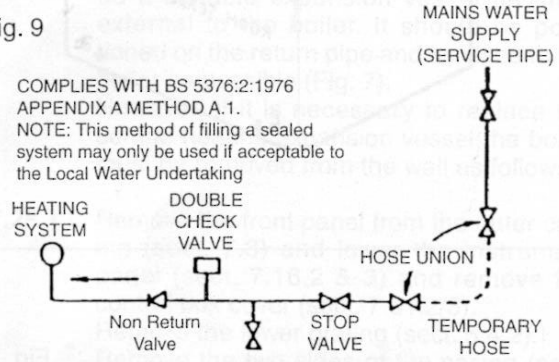

A combined double check valve shall be installed upstream of the draw-off point, through a temporary hose connection from a tap supplied from the mains, where the mains pressure is excessive a pressure reducing valve shall be used to make filling easier. The following fittings shall form a permanent part of the system and shall be fitted in the order stated.

a) A stop valve complying with the requirements of BS 1010 Part 2 (the temporary hose from the draw off tap shall be connected to this fitting).
b) A test clock.
c) Double check valve of an accepted type.
d) A non return valve of an accepted type.

We recommend use of a Ravenheat Filling Loop designed for **this** method of filling the system. Available from your supplier.

PROVISIONS FOR MAKE UP WATER (Fig. 7)

Provision can be made for replacing water loss from the system either.

A) from a manually filled made up bottle with a readily visible water level. The bottle should be mounted at least 150 mm (6 in) above the highest point of the system and be connected through a non return valve to the return side of the heating system.

B) Where fitting a make up vessel would be difficult re - pressurisation of the system can be done. See section on FILLING.

If the capacity of the central heating system should exceed 110 litres, an additional vessel should be installed on the return to the combination boiler from the heating system (Fig. 7). Guidance on vessel sizing is given in (Table 3).

Reference should be made to British Gas Publications <<Material. and Installation Specifications for Domestic Central Heating and Hot Water >> Draining taps should be at least 1/2" in BSP nominal size and be in accordance with BS 2879.

4.8.9 **Installation to an existing central heating system**

The System boiler is designed to operate on a sealed system only. Therefore if the existing system is of the open water type it will have to be modified to comply with BS 5376 Part 2.

Before installing a new System boiler to an existing system, flush out the old system with a recommended descaling agent.

It is most important that the correct concentration of the water treatment product is maintained in accordance with the manufacturers' instructions.

If the boiler is installed in an existing system any unsuitable additives MUST be removed by thorough cleansing.

BS 7593:1992 details the steps necessary to clean domestic central heating system.

Also check pipework and renew any corroded pipework or fittings. Valve glands must be repacked or replaced wherever necessary and any defective controls exchanged.

WATER TREATMENT

This boiler has a secondary ALUMINIUM alloy heat exchanger Ravenheat recommended only the use of FERNOX-COPAL, SENTINEL XI00 or SALAMANDER CURROSION GUARD water treatment products, which must be used in accordance with the manufacturers instructions. For further information contact:

Fernox Manufacturing Co. Ltd.
Tel. 01799 550811
Sentinel Division Betz Dearborn Ltd.
Tel. (0151) 424 5351
Salamander (Eng) Ltd
Tel. (0121) 3780952/4508

4.10 ELECTRICAL SUPPLY

Warning: this appliance must be earthed

4.10.1 External wiring to the appliance must be carried out by a competent person and be in accordance with the current I.E.E. Regulations and local regulations which apply.

The Ravenheat boiler is supplied for connection to a 230 V - 50 Hz single phase supply. **The supply must be fused at 3 A.**

NOTE: The method of connection to the electricity supply MUST facilitate complete electrical isolation of the appliance, by the use of a fused, double pole isolator, having a contact separation of at least 3 mm in all poles. The point of connection to the electricity supply must be readily accessible and adjacent to the appliance except, where the appliance is installed in a bathroom, this MUST be sited outside the bathroom.

SECTION 5 INSTALLATION

5.1 WARNING

5.1.1 It is MOST IMPORTANT that this appliance is installed in a VERTICAL POSITION, with the flue air duct passing through the wall. **Make sure flue slopes 2.5° down towards the boiler that is 45 mm/m fall per metre of flue length.**

Fig. 10

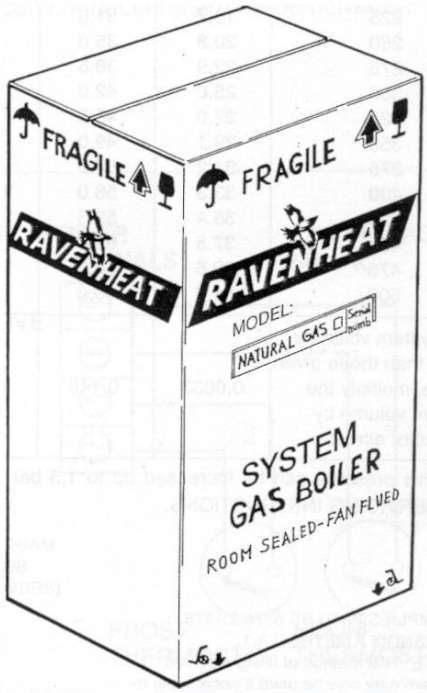

Fig. 11

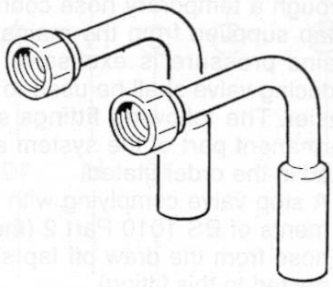

5.2 DELIVERY

5.2.1 The appliance will arrive on site in two cartons

Box 1 of 2 containing (Fig. 10 - 11):

a) boiler fully assembled
b) installation instructions and user Instructions
c) white paper template
d) terminal cover plate (Fig. 12)
e) - 4 coach bolts and wall plugs
- screws and dowels

Polythene bag containing

a) 2-22 mm compression ball valves
b) 1-1/2" BSP Union gas cock
c) 2 22 mm flanged copper tails complete with 3/4" brass nuts and washers

Box 2 of 2 containing (Fig. 12):

Horizontal CSI flue kit
57 - Flue bend assembly
58 Header gasket
59 - Rubber seal 0 60
60 - Air intake duct
61 - Flue exhaust duct
62 -Terminal
65 - Pipe centering spring
66 Flue gas sample point
127 -Terminal rubber
(Contained in the carton Fig. 1O)

WARNING:
Maximum allowable flue length 2.5 m.
maximum No. 2x1000 mm.
Flue duct extension used with standard flue

Fig. 13

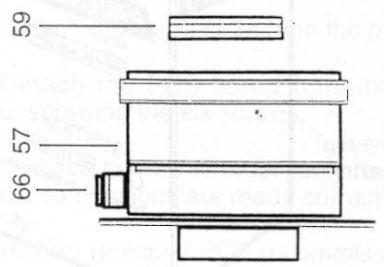

Fig. 12

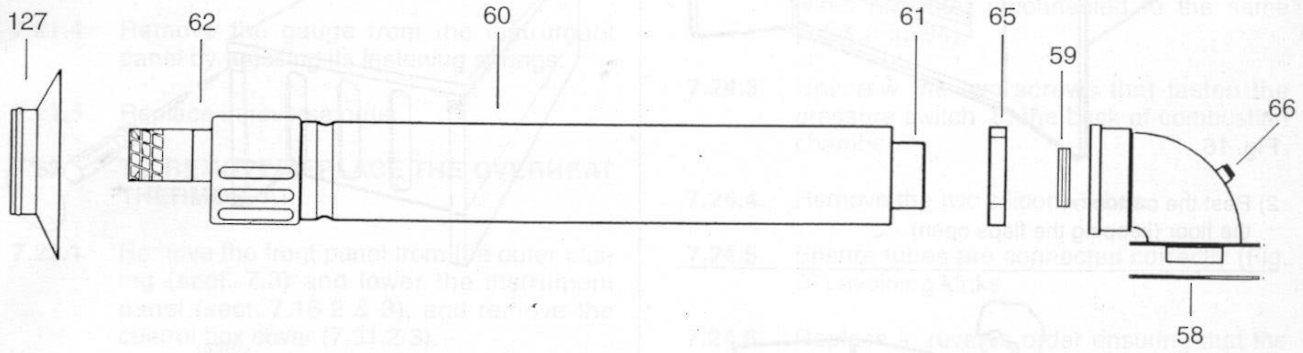

OPTIONAL EXTRAS:
Small carton containing: (Fig. 13)

57 Straight header supplied as an extra cost only when requested
59 - Rubber seal 0 60
66 - Flue gas sample point

FLUE EXTENSION BOX CONTAINING (Fig. 14)
1000 mm flue extension duct as an extra cost only when requested for side and vertical flue applications

59 Rubber seal 0 60
63 - Air intake duct extension
64 - Flue exhaust duct extension
65 - Pipe centering spring

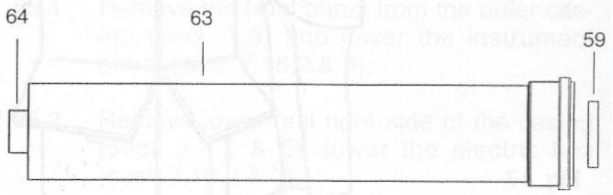

5.3 UNPACKING

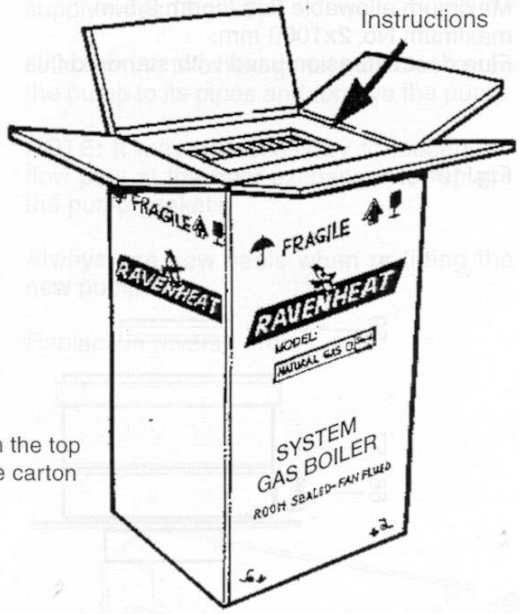

Fig. 15

1) Open the top of the carton

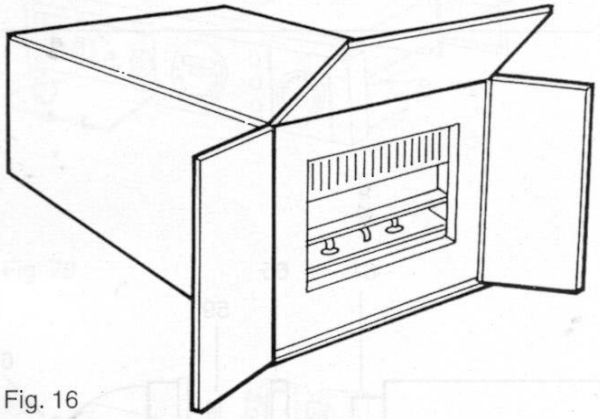

Fig. 16

2) Rest the carton on the floor (keeping the flaps open)

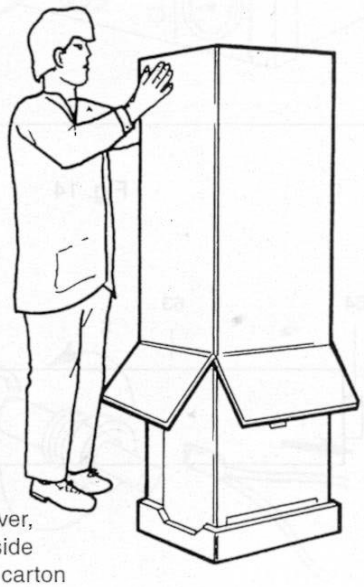

Fig. 17

3) Turn the carton over, with the boiler inside and then pull the carton

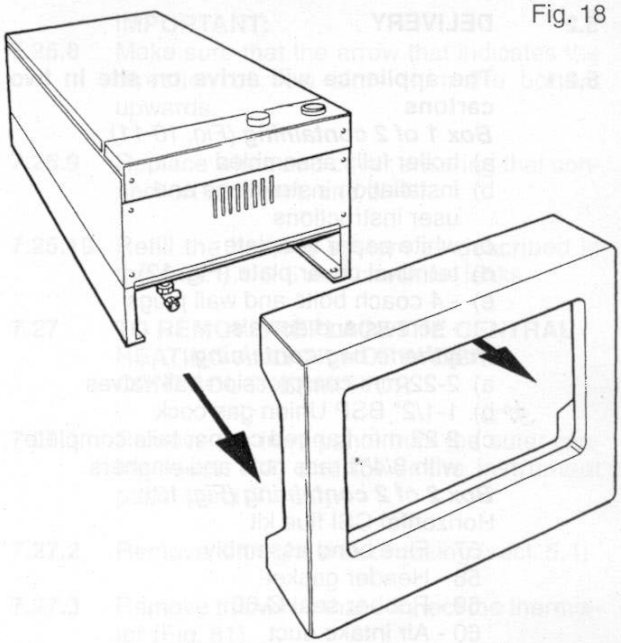

Fig. 18

4) Rest the boiler on the floor and remove the polystyrene guards

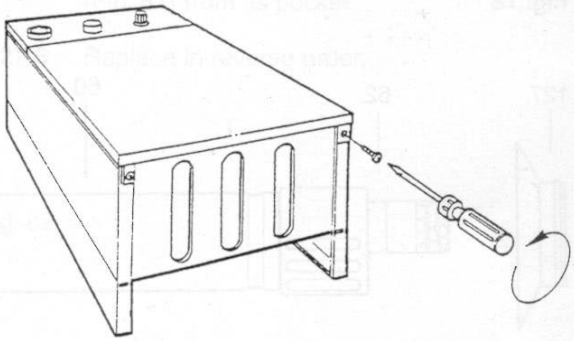

Fig. 19

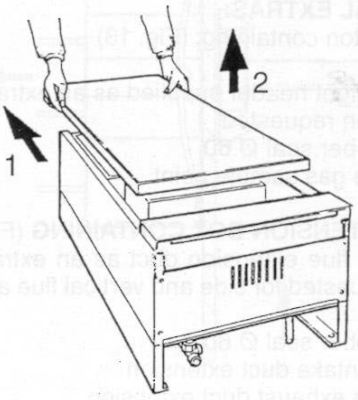

Fig. 20

5.4 **POSITIONING OF THE BOILER**

54.1 - Remove the 2 screws that secure the upper part of the front panel of the casing (Fig. 19).
- Carefully slide the front panel a few millimetres up towards the top of the appliance until it is free from its slot, and then lift off (Fig. 20).

5.4.2 Unscrew the 2 screws that fasten the lower grating on the casing and remove it from the sides of the casing (Fig. 22).

5.4.3 Push down the 2 plastic clips that fasten the instrument panel (Fig. 23).

5.4.4 Lower the instrument panel down by rotating it on its own hinges (Fig. 25).
Unscrew the two screws fastening panels (Fig. 21).

5.4.5 Remove the two sides of the casing by slightly lifting them and carefully sliding towards the top of the appliance, to release them from their upper suspension hooks (Fig. 26-27).

5.4.6 Make sure the casing and screws are put to one side in a safe place.

5.5 **INSTALLINGTHE APPLIANCE FOR REAR FLUE OUTLET**

5.5.1 Use adhesive tape to attach the template to the wall, making sure that the centre line is vertical.
- Mark the four boiler fastening holes on the wall as well as the centre of the flue duct.
- Detach the template from the wall.
- Use a 10 mm. dia drill to make the 4 boiler securing holes. Insert the plastic expansion plugs.
- Cut or core drill a 105 mm. dia hole for inserting the flue duct.
- Screw in the two upper coach bolts leaving them about 10 mm. out from the wall to enable the boiler to be located on the wall.

Fit the elbow header positioning it towards the required direction (Fig. 30).

IMPORTANT: Make sure that the elbow's dia. 60 mm duct is inserted into the fan, the rubber seal and **orifice (F2) have been correctly fitted.**

Fig. 22

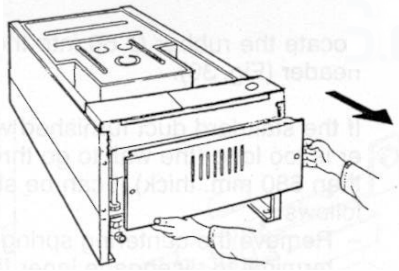

Fig. 23

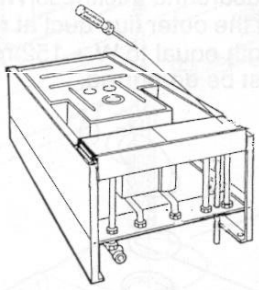

Fig. 25

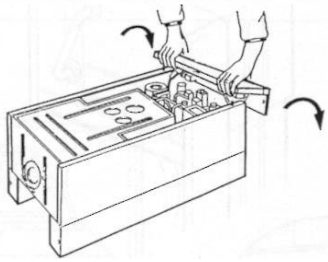

Fig. 26

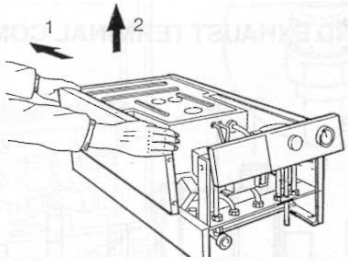

Fig. 27

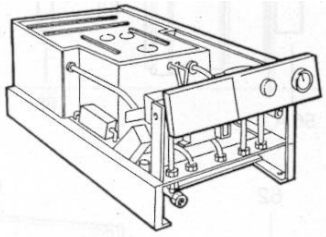

Fig. 21

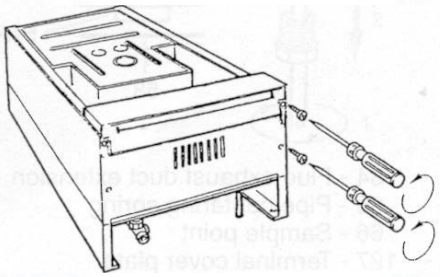

Fiq. 26-29

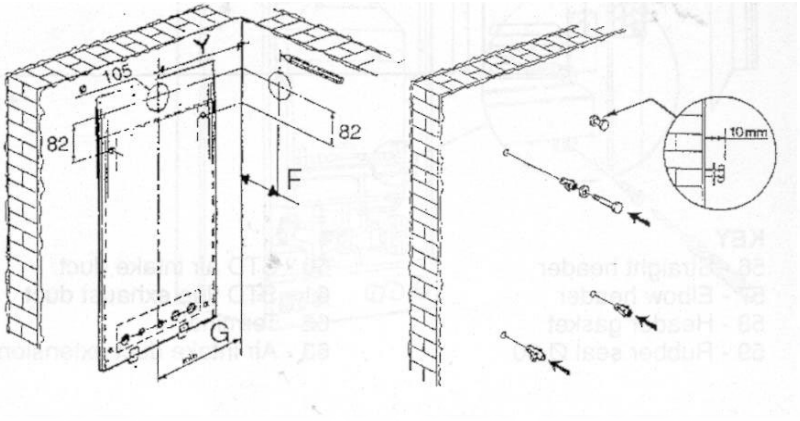

5.5.2 Locate the rubber 0 60 into the flue elbow header (Fig. 30).

5.5.3 If the standard duct furnished with the boiler is too long (the wall to go through is less than 680 mm. thick) it can be shortened as follows:

- Remove the centering spring 65, the flue terminal to disengage inner flue duct.
- Measure the thickness W of the wall.
- Cut the outer flue duct at right angles to a length equal to W + 152 mm. Must be de-burred.
- Cut the inner flue duct (60 mm) at right angles to a length equal to W + 264 mm. Insert from cut end. Reassemble the two tubes. Insert centering spring 65. Must be de-burred.
- Reassemble together inner and outer flue duct insert centering spring.

Fig. 30

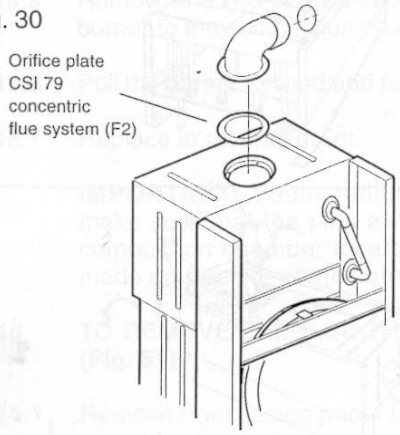

Fig. 32

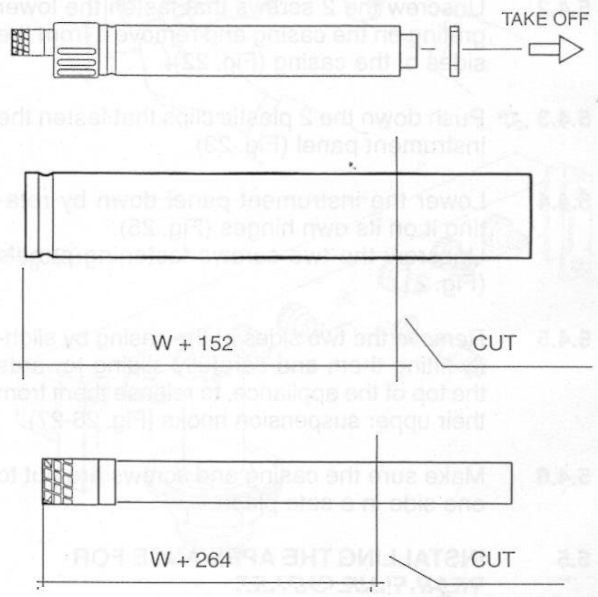

INTAKE AND EXHAUST TERMINAL COMPONENTS

Fig. 31

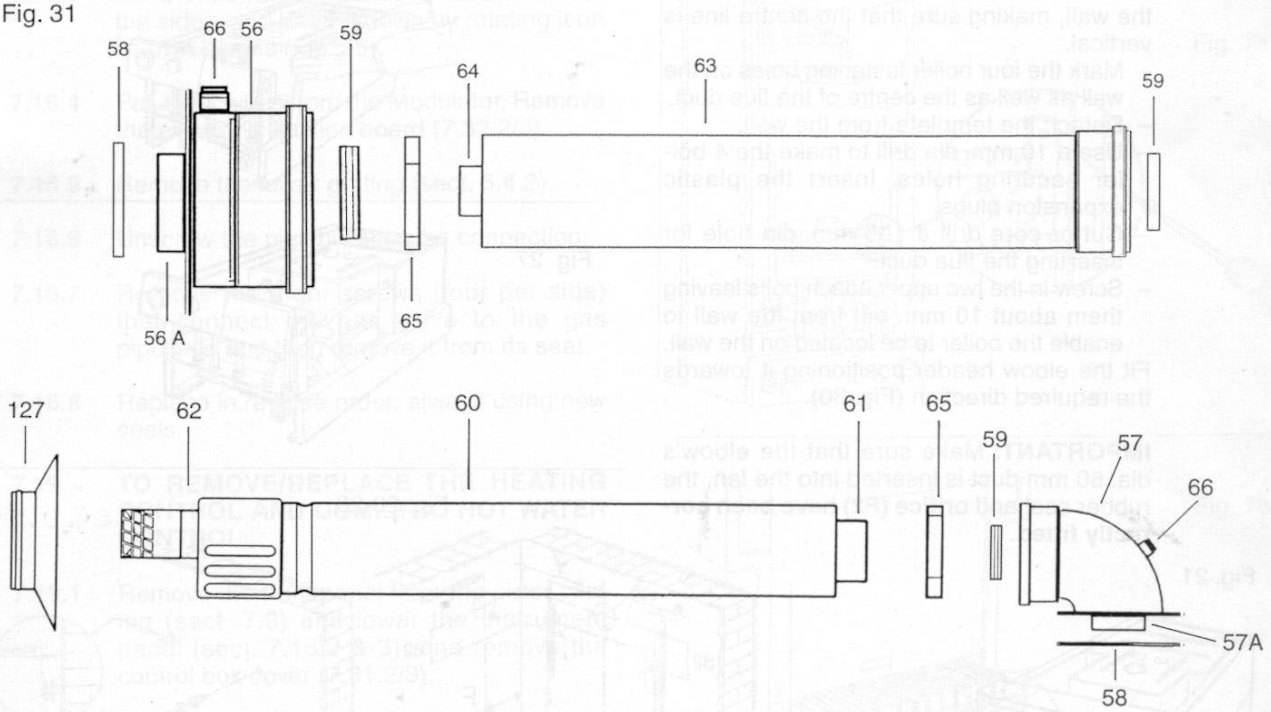

KEY

56 - Straight header
57 - Elbow header
56 - Header gasket
59 - Rubber seal 0 60
60 - STD air intake duct
61 - STD flue exhaust duct
62 - Teriminal
63 - Air intake duct extension
64 - Flue exhaust duct extension
65 - Pipe centering spring
66 - Sample point
127 -Terminal cover plate

5.5.4 Insert the flue assembly into the wall, being careful to make sure that the outer air duct comes flush to the inner surface of the wall.

5.5.5 Lift the boiler on to the wall (Fig. 34), locating onto the top coach bolts. Fit the two lower coach bolts and tighten all four securing bolts.

5.5.6 Working above the boiler pull the flue exhaust duct towards the boiler in order to engage tube 61 into its header 57A.
Position flue into elbow header and push so as to locate inner and outer flue correctly ensuring good seal is made with o rings.

Fig. 33

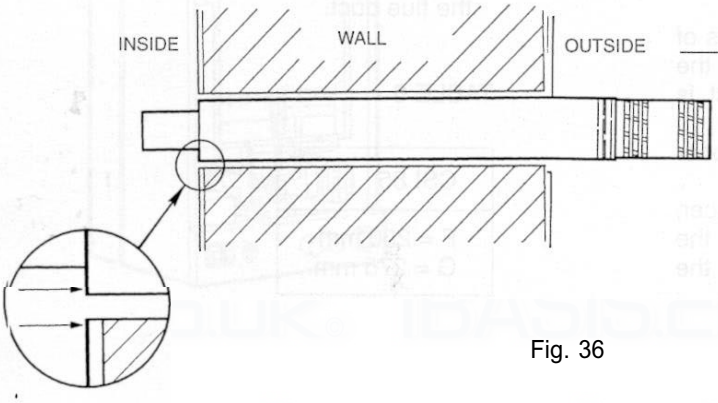

Fig. 36

Fig. 34

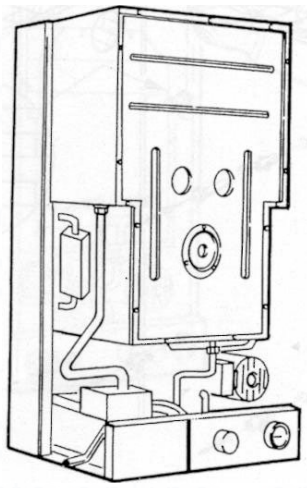

5.5.8 Fit terminal cover plate and terminal guard (Fig. 36-37).

5.5.9 Extension kits are available on order for flue extension of up to 2.5 metres total length (Fig. 31).

Fig. 35

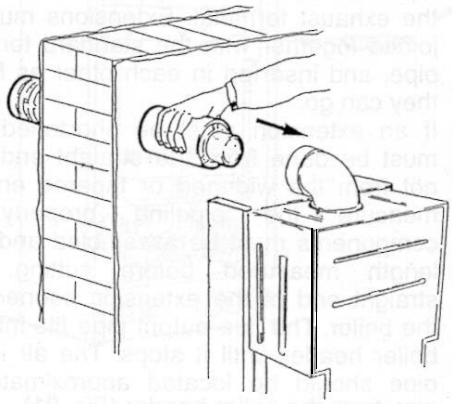

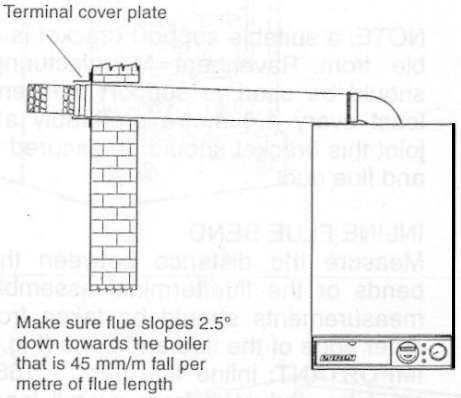

Make good inside and outside wall around the air duct

Fig. 37

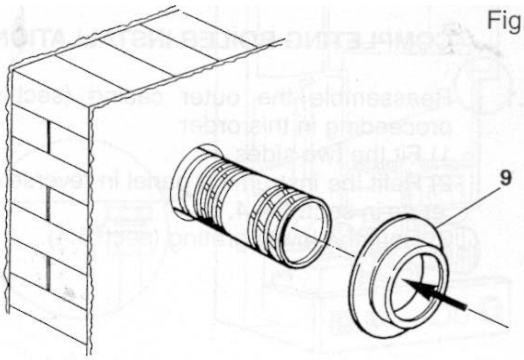

5.5.10 Each extension length extends the pipe by approximately 1000 mm long up to a maximum of two extensions.
Pipeline length can be established using the instructions in section 5.5 for rear flue outlets and section 5.7 for side flue outlets.
Extensions must be installed with the widened end of the air intake pipe and the tapered end of the flue pipe aimed towards the exhaust terminal. Extensions must be joined together with the standard terminal pipe, and inserted in each other as far as they can go.
If an extension must be shortened, this must be done from the straight end, and not from the widened or tapered end. To measure the pipeline properly all components must be assembled and total length measured before cutting. The straight end of the extension connects to the boiler. The flue output pipe fits into the boiler header until it stops. The air intake pipe should be located approximately 2 mm. from the boiler header (Fig. 31).
When cutting both inner and outer ducts of the extension, always ensure that the reduced end (male) of the inner duct is longer than the outer duct.
All joints must be sealed with the rubber seals supplied.
It is important to put the centering spacer, supplied with the unit, inside between the two pipes, from the side opposite the extension's straight end.

NOTE: a suitable support bracket is available from Ravenheat Manufacturing and should be used to support flue length at least every 1.8 metre preferably at each joint this bracket should be secured to wall and flue duct.

5.5.11 INLINE FLUE BEND
Measure the distance between the flue bends or the flue/terminal assembly. The measurements should be taken from the outer edge of the flue and bend (Fig. 398).
IMPORTANT: inline flue bend - 1680 mm must be deducted from overall length for each 90" bend. Obtuse flue bend - 1680 mm must be deducted from overall length for each 135" bend (Fig. 398).

5.6 COMPLETING BOILER INSTALLATION

5.6.1 Reassemble the outer casing (sect 5.4) proceeding in this order
1) Fit the two sides.
2) Refit the instrument panel in reverse order as in sect. 5.4.4.
3) Refit the lower grating (sect. 5.4).

5.7 INSTALLING THE APPLIANCE FOR SIDE FLUE OUTLET (Fig. 39)

5.7.1
- Attach the template to the wall with adhesive tape, making sure that the centre line is vertical and that the distance from the centre line to the nearest side wall is not less than measurement in table 6.
- Mark the four boiler securing holes on the wall and extend the axis of the flue duct hole to the side wall ensuring it is horizontal.
- Trace the centre of the flue duct hole measure distance F (table 6). From the corner of the wall (Fig. 38), measure the distance Y between the centre of flue duct hole to the corner. Detach the template from wall.
- Use a dia. 10 mm. drill to make the 4 holes for securing the boiler. Insert the plastic expansion plugs. Core drill a 105 mm dia. hole in the side wall for inserting the flue duct.

TABLE 6

CSI 85
F = 200 mm G = 275 mm

Fig. 39

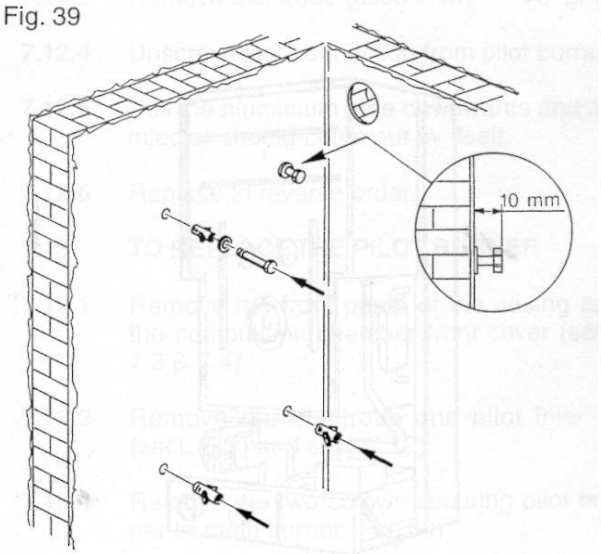

Fig. 39B

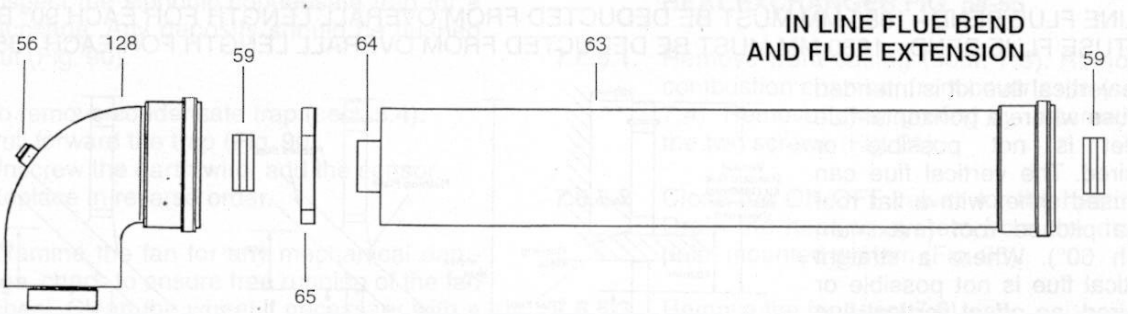

KEY

56 - Sample point
57 - Elbow Header
59 Rubber seal 0 60
63 - Air intake duct extension
64 - Flue Exhaust duct extension
65 - Pipe centering spring
128 In Line Bend

5.7.2 Positioning the elbow towards the required direction (Fig. 30).

5.7.3 Locate the 0 60 into the elbow (Fig. 30).

5.7.5
- If the standard duct furnished with the boiler is too long (position of the boiler from the wall to go through as illustrated in the drawing and wall thicknesses less than what was specified above) it can be shortened as follows: Fig.28-29-31-32.
- Remove the centering spring 65, pull the flue terminal disengage inner flue duct.
- Measure the thickness W of the wall.
- Cut the outer air duct (100 mm. dia.) at right angles and to a' length equal to W+Y - 47 mm. (Fig. 32).
- Cut the inner flue duct (60 mm. dia.) at right angles and to a length equal to W+Y + 65 mm.
- Outer air duct and inner flue duct must be de-burred.
- Reassemble the two tubes. Insert centering spring 65.

5.7.6 Insert the flue assembly into the wall, making sure it will not interfere when fixing the boiler on the wall.

5.7.7 Lift the boiler on the wall. Locate onto the top coach bolts. Fit the lower coach bolts and tighten all four securing bolts.

5.7.8 Working above the boiler pull the flue duct towards the elbow in order to engage tube into its header (Fig. 35).
Position flue into straight header and push so as to locate inner and outer flue correctly. Ensuring good seal is made with o.rings.

5.7.10 IMPORTANT: Terminal rubber must be fitted (Fig. 37).

5.7.11 Extension kits are available on order for flue extension of up to 2.5 metres total length (Fig. 31). For further details see sect 5.5.10.

5.7.12 VERTICAL FLUE INSTRUCTIONS ONLY

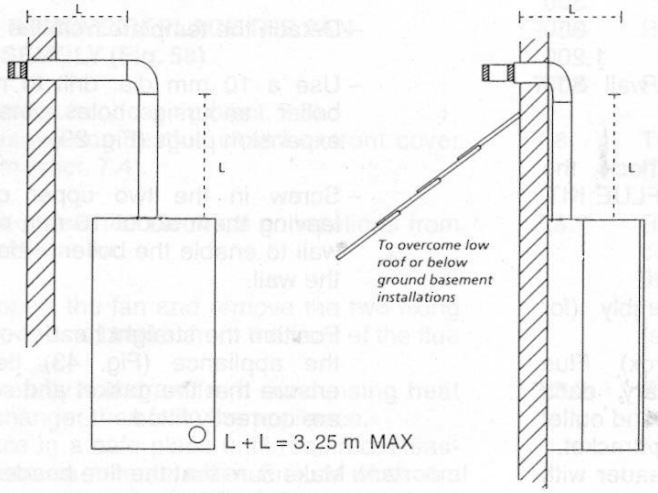

Fig. 40

Fig. P

Fig. M

5.7.12 VERTICAL FLUE INSTRUCTION ONLY

INLINE FLUE BEND - 1680 MM MUST BE DEDUCTED FROM OVERALL LENGTH FOR EACH 90” BEND
OBTUSE FLUE BEND - 16130 MM MUST BE DEDUCTED FROM OVERALL LENGTH FOR EACH 135” BEND

The vertical flue kit is intended for use where a horizontal flue outlet is not possible or desired. The vertical flue can be used either with a flat roof or a pitched roof (maximum pitch 60°). Where a straight vertical flue is not possible or desired, an offset vertical flue can be used in conjunction with a side horizontal flue extension piece and an inline 135°/90° flue bend (Fig. 41).

IMPORTANT NOTES
For greater flue lengths see twin flue leaflet

Fig. 41

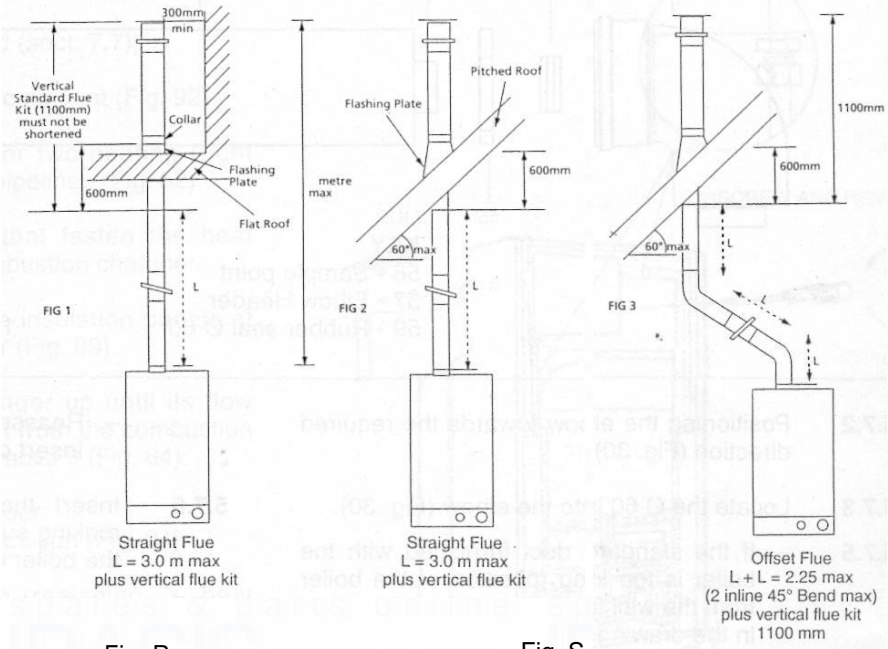

Fig. R

Fig. S

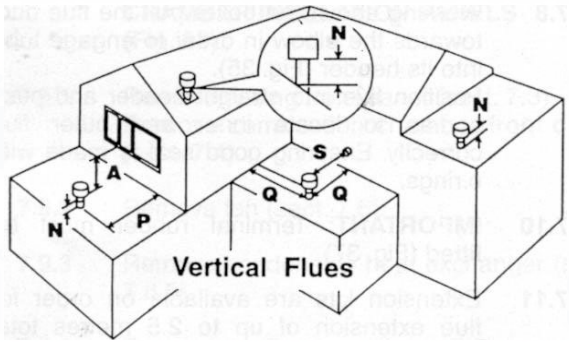

Fig. 42

POSITION	MIN. DISTANCE mm
N above roof level (to base of terminal)	300
P from adjacent wall to flue	300
Q from internal corner to flue	300
S from facing terminal	1,200
M horizontally from a vertical terminal to a wall	300

Before proceeding with installation check the contents of the RAVENHEAT VERTICAL FLUE KIT, comprising of the following pieces:

- 1 RAVENHEAT VERTICAL FLUE complete with terminal assembly (for vertical flue application).
- Additional 1000 mm (approx) Flue Extension pieces as necessary, each extension is provided with inlet and outlet sealing rings and flue centering bracket.
- One box containing straight header with inlet and outlet sealing rings.

Proceed with installation as detailed in section 5 up to 5.4.8., of the main Installation and Servicing Instruction, ignoring all references to horizontal flue installations.

Use adhesive tape to attach the template to the wall, making sure that the centre line is vertical and that the flue centre line is virtually below the point at which the flue will exit the roof.

- Ensure that the maximum permissible flue length is not exceeded (Fig. 42).
- Mark the four boiler fastening holes on the wall.
- Detach the template from the wall.
- Use a 10 mm dia. drill to make the 4 boiler securing holes. Insert mastic expansion plugs (Fig. 29)
- Screw in the two upper coach bolts leaving them about 10 mm out from the wall to enable the boiler to be located on the wall.
- Position the straight header on the top of the appliance (Fig. 43) Item 6, and ensure that the gasket and sealing rings are correctly fitted.

Important: Make sure that the flue header dia 60 mm duct is inserted fully into the fan spigot.

Model	Max no of flue extensions	Overall max flue length	Distance to centre of flue from back wall
CSI SYSTEM	3	4 metre	200 mm

Fig. 43

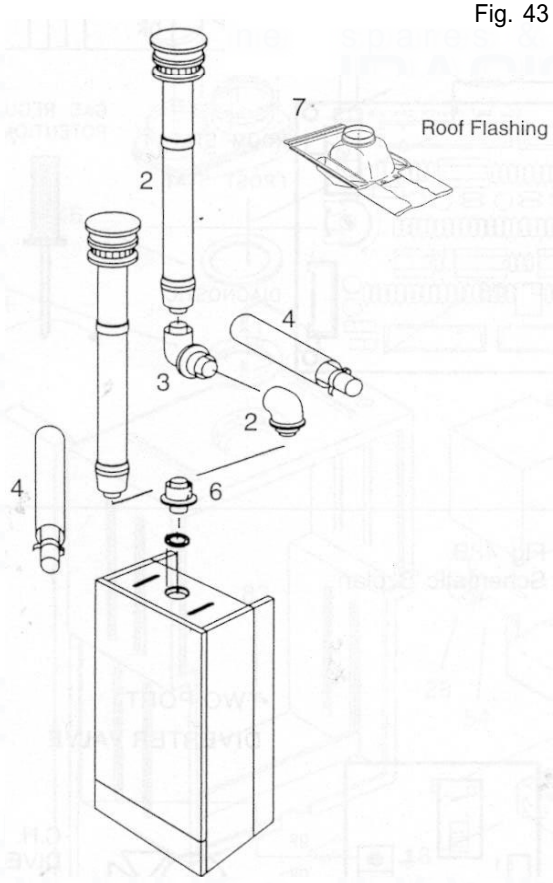

Cut a 105 mm diameter hole through the ceiling and/or roof, at the point previously marked.

Fit a roof flashing sleeve (7 Fig. 43) to the roof, available from Ravenheat Manufacturing.

Insert the Vertical Flue terminal assembly through the flashing plate from the outside.

Fix the appliance to the wall, locating onto the top coach bolts. Fit the two lower coach bolts and tighten all four securing bolts,

Measure the vertical distance between the top of the flue (Fig. 42) and the bottom of the flue terminal assembly (Fig. 41). The measurements should be taken from the outer diameter of the flue.
NOTE: Where this length does not match any standard combination of the extensions, extension can be cut to the required length (Fig. 44).

When cutting both inner and outer ducts of the extension, always cut on spigot side, and they must be de-burred.

Fig. 44

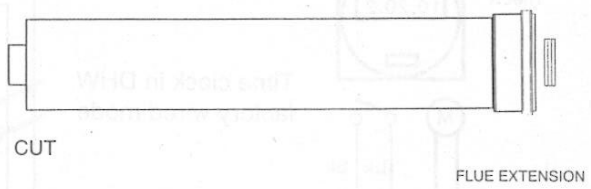

Starting at the appliance end, assemble the extension duct sections, making each inner and outer (flue) joint by inserting the spigot end into the socket end of the next tube, making sure the seal rings are correctly located (Fig. 44). Make sure that the entire flue is adequately supported. Use at least one bracket for each extension used.

Ensure that all inner flue connections have a good fit/seal, and that the space clips in each extension are correctly positioned.

5.6 REASSEMBLE BOILER AS PER (sect. 5.6.1)

5.6.1 Fitting valve pack
Remove plastic caps from boiler connection and fit flanged copper tail and valves as per Fig. 46 using washers provided.

5.9 GAS CONNECTION (Fig. 46)

5.9.1 A minimum working gas pressure of 20 mbar (8 in wg.) must be available at the boiler inlet at full flow rate (37 mbar for propane, 29 mbar for butane).

5.9.2 Fit gas service cock to the boiler via the union nut and connect gas pipe.
Do not overtighten and use another spanner as a counter force to avoid straining internal connections.
Important consult (sect 4.5.1).

5.10 CENTRAL HEATING CONNECTION (Fig. 46)

5.10.1 Before any central heating connections are made to the boiler all system valves should be opened and the system thoroughly flushed out with cold water.
- Connect the central heating return pipe to the isolating cock marked CHR.
- Connect the central heating flow pipe to the isolating cock marked CHF.
- Pipe dimensions and positions are marked on template supplied and fig. 45.

Fig. 48

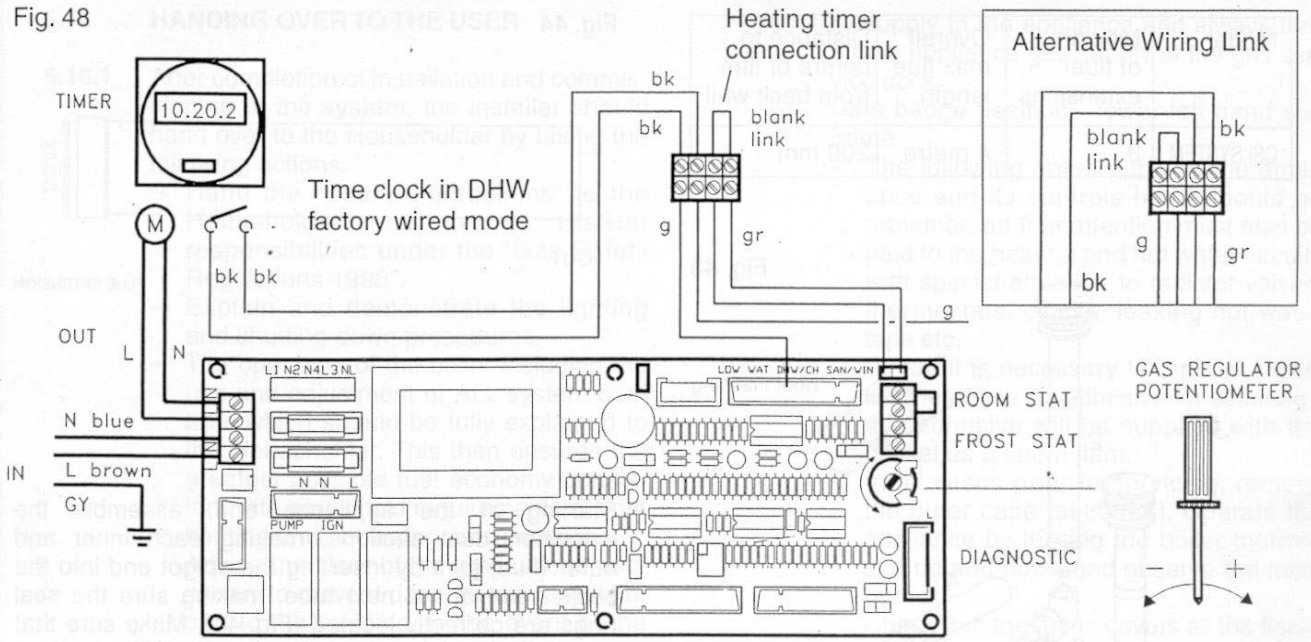

Fig. 48A
Schematic 'Y' plan

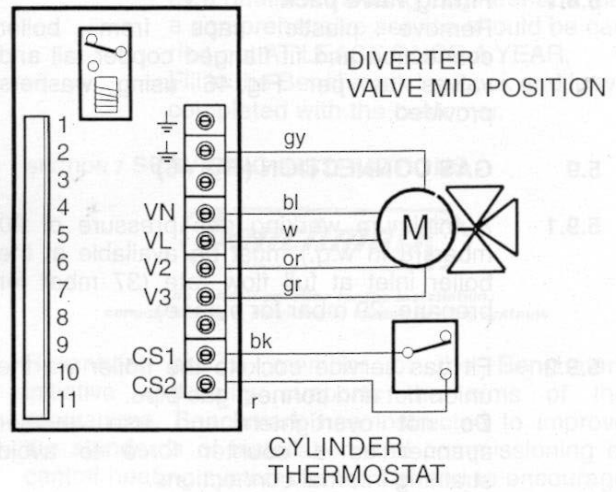

Fig. 48B
Schematic 'S' plan

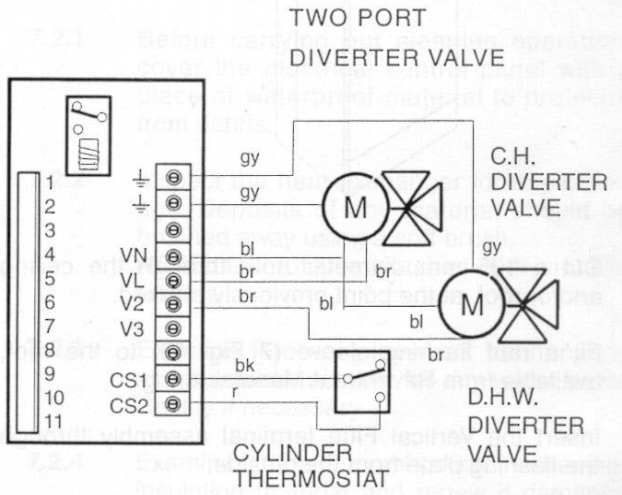

Fig. 49A

POSITIONING OF WATER AND GAS CONNECTIONS

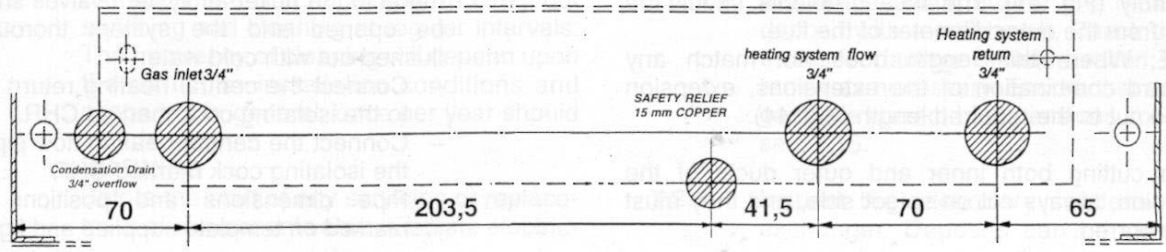

Fig. 46

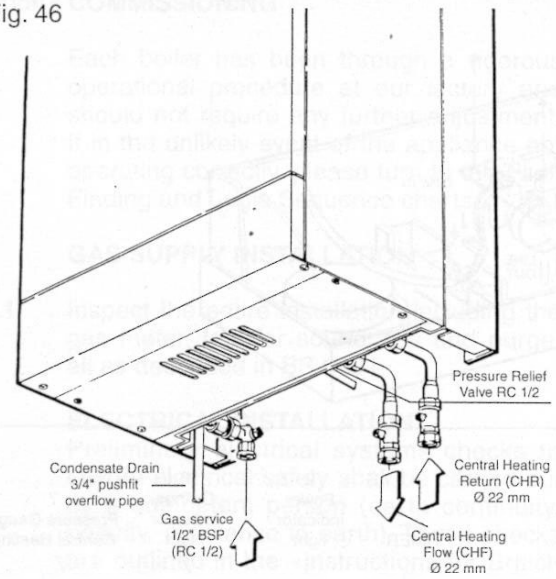

5.12 SAFETY VALVE DISCHARGE

5.12.1 The safety valve is located near the pump. It has a threaded outlet RC 1/2" (to 15 mm copper) to permit a discharge pipe to be connected. When connecting ensure the discharge pipe does not restrict access.
The discharge should terminate facing downward exterior to the building in a position where discharging (possibly boiling water & steam) will not create danger or nuisance, in easily visible position, and not to cause damage to electrical components or wiring.
The discharge must not be over an entrance or a window or any other type of access.

5.13 ELECTRICAL CONNECTIONS

5.13.1 IMPORTANT: Electricity supply must be as specified in clause (sect. 4.10).
- When controls external to the appliance are required, design of the external electrical circuits should be undertaken by a competent person. In accordance with the IEE wiring regulations.
  It is essential that all external controls must be volt free.
  Factory fitted internal wiring must not be disturbed when wiring external controls.

5.132 There are 2 electrical boxes, to gain access remove the front panel of the case as described in clauses (sect. 5.4.1) and the instrument panel as described in clauses (sect. 5.4.3).
The terminals are easily visible on the front of the electronic control panel board (Fig. 48).

5.13.3 To gain access to external zone valve and cylinder stat connection box remove the 2 screws on the side of the plastic cover just behind the control panel (see Fig. 48a or Fig. 48b).
Heat resistant flexible cable is fitted between the isolator and the terminal block. A 3 core cable of 0.75 mm (24 x 0.2 mm) to BS6500.
Make sure all wires to the appliance are routed away from sharp edges and hot surfaces. The cable must be fastened with its cord anchorage and connected so that should the cable slip from the anchorage the current carrying conductors become taut before the earthing conductor.
Securely tighten all terminal screws and arrange the cable with slack between the cord anchorage and the terminal block.

5.13.4 PROGRAMMABLETIME CLOCK

A single channel 7 day digital programmable time clock is fitted as standard in the boiler. When used with a 'Y' or 'S' plan system it will control DHW and/or heating only (if required see Fig. 48). As an alternative Ravenheat recommend a room stat with built in timer for control of heating using boiler timer for DHW time settings.

5.13.5 Check the electrical installation for earth continuity, short circuits, resistance to earth, correct polarity and fuse failure.

WARNING: If supply cord is damaged, it must be replaced by a service engineer (supply cord available from Ravenheat Manufacturing Ltd).

5.14 PROGRAMMABLE TIME CLOCK
Instructions for use consult User's Guide.

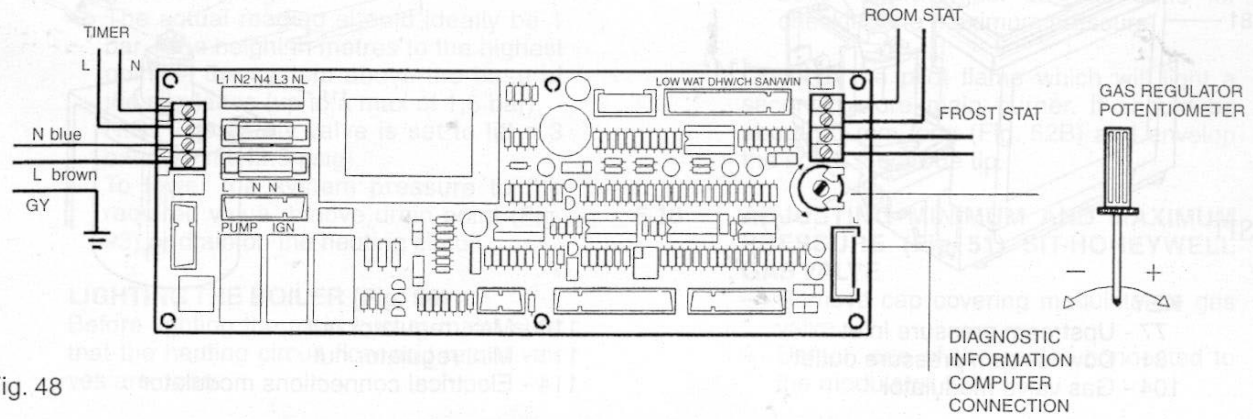

Fig. 48

Fig. 49

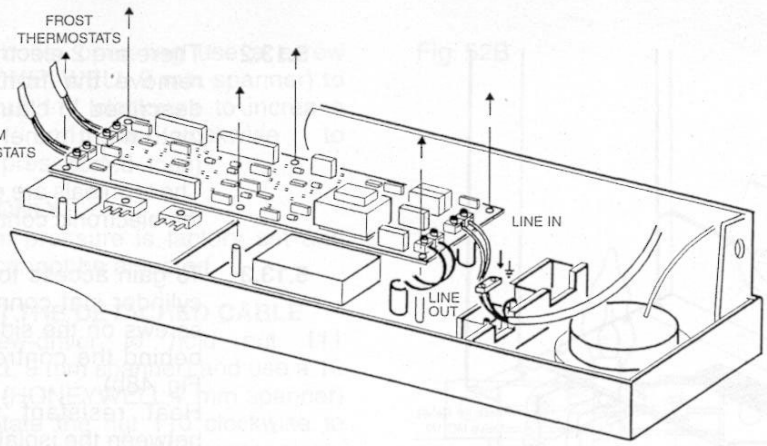

INSTRUMENT PANEL

Fig. 50

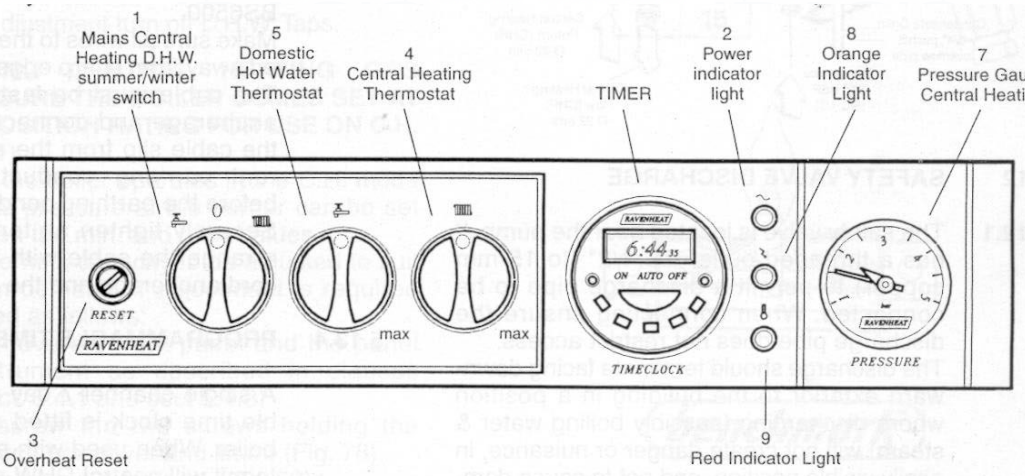

GAS VALVE

Fig. 51

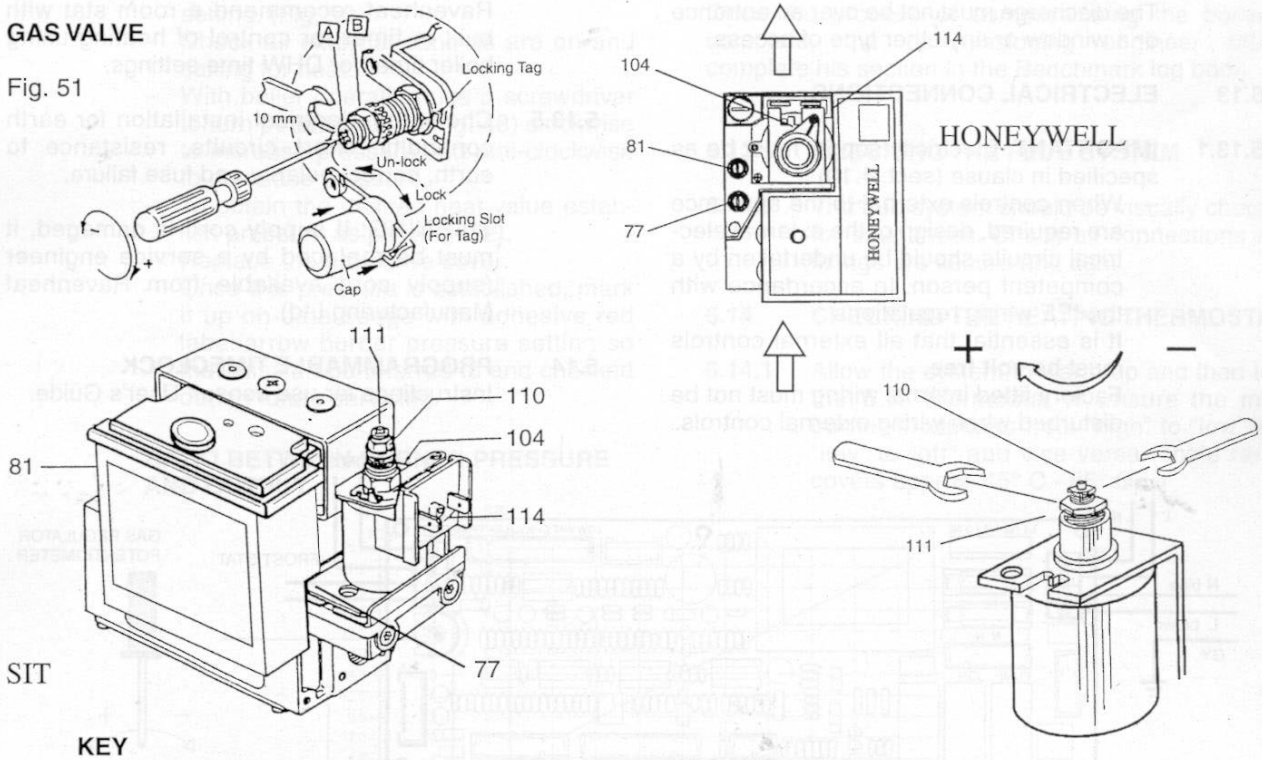

SIT

KEY

77 - Upstream pressure inlet
81 - Downstream pressure outlet
104 - Gas valve modulator
110 - Max. regulator nut
111 - Min. regulator nut
114 - Electrical connections modulator

SECTION 6 COMMISSIONING

6.1 Each boiler has been through a rigorous operational procedure at our factory and should not require any further adjustment. If in the unlikely event of the appliance not operating correctly, please turn to the Fault Finding and Logic Sequence charts.

6.2 GAS SUPPLY INSTALLATION

6.2.1 Inspect the entire installation including the gas meter, test for soundness and purge, all as described in BS 6891.

6.3 ELECTRICAL INSTALLATION

Preliminary electrical systems checks to ensure electrical safety shall be carried out by a competent person (earth continuity, polarity, resistance to earth). Those checks are outlined in the <<Instructions for British Gas Multimeter>> Booklet. If a fault has occurred on the appliance the fault finding procedure should be followed as specified under the servicing section of this document.

6.4 INITIAL FILLING OF THE SYSTEM

Open central heating flow and return valves.

Unscrew the cap on automatic air release valve one full turn (leave open permanently).

- Close all air release taps on the central heating system.
- Gradually open stopcock at the filling point connection to the central heating system until water is heard to flow.
- Starting with the lowest radiator open each air release tap in turn. Close it only when clear water, free of bubbles, flows out. In the same way release air from any high points in the pipework.
- Continue filling the syStem until 1.5 bar registers on gauge. Then turn off the filling points stopcock.
- Inspect the system for water soundness and remedy any leaks discovered.

6.5 SETTING THE SYSTEM DESIGN PRESSURE

The design pressure must be a min. 1 bar and max. 1.5 bar. These figures are read off the pressure gauge.

- The actual reading should ideally be 1 bar + the height in metres to the highest point of the system above the base of the appliance (up to a max of 1,5 bar).
  N.B.: The safety valve is set to lift a 3 bars (30 mt/42.5 psig).
- To lower the system pressure to the required value remove drain point (Fig. 93) or drain on the heating circuit.

6.7 LIGHTING THE BOILER (Fig. 50)

Before lighting the main burner make sure that the heating circuit flow and return valves are open.

- If external controls are installed (e.g. timeclock and thermostat) make sure that they call for heat.
- Turn on main switch 1 (Fig. 50).
- Turn control thermostat 4 up to its maximum setting.
- Now the main burner should turn on.
  With leak detection fluid test for gas soundness of all gas components and joints.
- See paragraph 6.14 for regulating the heating circuit thermostat.
  Check gas mains pressure (Fig. 52). Fit a gas pressure gauge on pressure inlet 77 (Fig. 51) on the gas valve, after releasing the seal screw.
  Check the gas mains pressure with boiler operating.
  Check with the Local Gas supplier if the pressure differs significantly from 20 mbar (natural gas), 37 mbar (G 31) and 29 mbar (G 30).

6.9 CHECK THE GAS PRESSURE AT THE BURNER

Now check if the maximum gas pressure at the burner is equal to 10.5 + 0.5 mbar (4.2 ± 0.2 in wg.) for CSI 85 CSI 85T.

- LPG check gas pressure inlet (37 mbar propane - 29 mbar butane).

To do this proceed as follows:

- Turn off main switch 1 (Fig. 50)
  - -Set main switch 1 on
  - -Set control thermostat 5 at its maximum setting.
  - -Fit a pressure gauge, using a hose, to pressure test point 81, (Fig. 51), after first loosening its close-off screw.
  - -Open one or more hot water taps so that at least 10 -12 litre of water flows per minute.
- The pressure indicated on the pressure gauge is the maximum operating gas pressure.
- Check that the minimum pressure corresponds to 2 mbar (0.8 in wg.) for G 20 as is set at the factory.
- LPG 7.3 mbar for G 31 and 7.0 mbar for **G 30. This is set and sealed at the factory and cannot be adjusted.**
  Detach one of the wires going to modulator 104 (Fig. 51) and make the boiler operate just as was done for checking the maximum pressure.

Observe the pilot flame which will light a second before main burner. It should be about 20 mm long (Fig. 528) and envelop the spark electrode tip.

6.10 ADJUSTING MINIMUM AND MAXIMUM PRESSURE (Fig. 51) SIT-HONEYWELL GAS VALVE

- Remove cap covering modulator to gas valve.
- Detach one of the cables connected to the modulator 114.

- With the boiler operating use a screw driver (HONEYWELL 9 mm spanner) to turn the nut 111 clockwise to increase pressure and anti-clockwise to decrease pressure.

NOTE: LPG ONLY
The minimum pressure is factory set and sealed, and cannot be adjusted.

6.11 RECONNECTTHE DETACHED CABLE

Use a screw-driver to hold nut 111 (HONEYWELL 9 mm spanner) and use a 10 mm spanner (HONEYWELL 7 mm spanner) wrench to rotate the nut 110 clockwise to increase the pressure and counter-clockwise to decrease it.
After adjustment turn off D.H.W. Taps.

6.12 SETTING CENTRAL HEATING GAS PRESSURETHE BOILER COMES SET AT MID POSITION RATING FOR USE ON C.H. (table1)

When the boiler operates in the C.H. mode the gas pressure at the burner can be set between the min. and max. values.
This permits capacity to be adjusted to suit system demand. If adjustment is required proceed as follows:

- Remove the front panel and the panel instrument as described in clauses (sect. 5.4.1 and sect 5.4.3)
- Unscrew the two screws holding the control box cover and lift off (Fig. 78).
- Turn on main switch 1 (Fig. 50).
- Turn control thermostat 4 to maximum setting. (Fig. 50)
- Check all external controls are on and calling for heat.
- With boiler operating use a screwdriver to turn potentiometer (Fig. 48) clockwise to increase pressure and anti-clockwise to decrease pressure.
- To obtain the desired heat value establish pressure as per (Fig. 52).
- Replace the protective cover.
- Once this pressure is established, mark it up on data badge with adhesive red label/arrow burner pressure setting so that this can be referred to and checked during future servicing.

RATIO BETWEEN BURNER PRESSURE AND OUTPUT

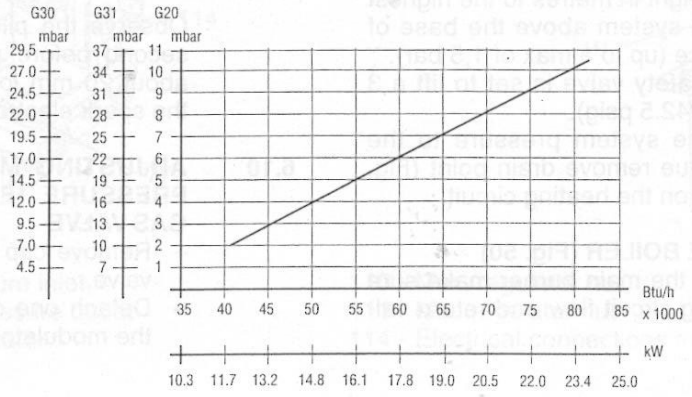

Fig. 52

Fig. 52B

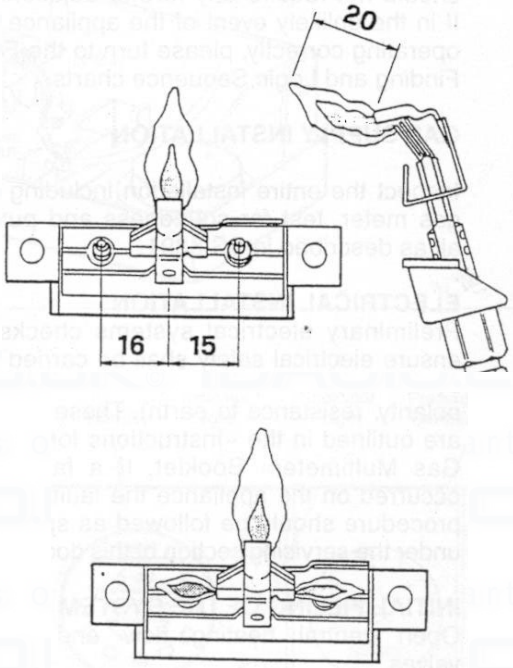

benchmark™

The code of practice for the installation, commissioning & servicing of central heating systems

Once the process of commissioning the boiler is complete, the commissioning engineer MUST complete his section in the Benchmark log book.

6.13 **CHECKINGTHE FLUE SYSTEM**

6.13.1 The flue system should be visually checked for soundness. Check all connections and fixings are secure and tight.

6.14 **CHECKINGTHE HEATINGTHERMOSTAT**

6.14.1 Allow the system to warm up and then turn the C.H. thermostat to ensure the main burner modulates from '"high" to "low" and "low" to "off" and vice versa (scale range covers approx. 45° C - 85° C).

EXPLODED DIAGRAM OF BOILER BODY

Fig. 53A

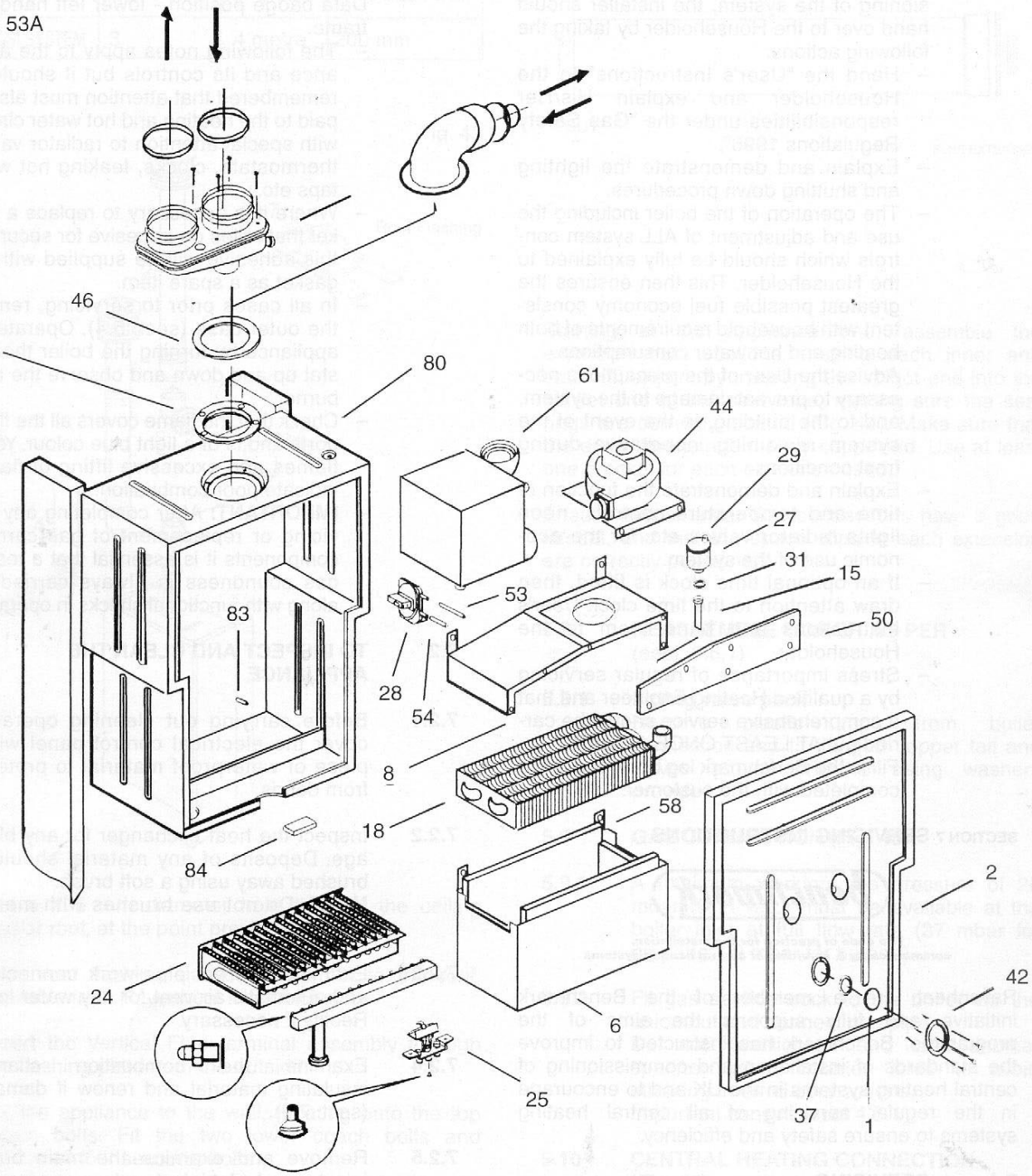

KEY

1 -Window
2 Plenum chamber cover
6 Combustion chamber
7 - Flue restriction ring
8 - Flue gas exhaust hood
15 - Connection pipe
18 - Heat exchanger
24 - Main burner
25 Pilot burner
27 - Auto air vent valve
28 - Pressure switch
29 - Seal
31 - Seal
37 -Window seal
42 -Window clamp ring
44 - Fan
46 - Header gasket
50 - Flue gas exhaust hood cover
53 - Connection tube
54 Connection tube
58 Ceramic insulation
61 Condensing heat exchanger
80 - Plenum chamber
83 - Burner centering pin
84 - Seal

6.16 HANDING OVER TO THE USER

6.16.1 After completion of installation and commissioning of the system, the installer should hand over to the Householder by taking the following actions:

- Hand the "User's Instructions" to the Householder and explain His/Her responsibilities under the "Gas Safety Regulations 1996".
- Explain and demonstrate the lighting and shutting down procedures.
- The operation of the boiler including the use and adjustment of ALL system controls which should be fully explained to the Householder. This then ensures the greatest possible fuel economy consistent with household requirements of both heating and hot water consumptions.
  Advise the User of the precautions necessary to prevent damage to the system, and to the building, in the event of the system remaining inoperative during frost conditions.
- Explain and demonstrate the function of time and temperature controls, neon lights radiator valves etc. for the economic use of the system.
- If an optional time clock is fitted, then draw attention to the time clock User's Instructions and hand them to the Householder.
- Stress importance of regular servicing by a qualified Heating Engineer and that a comprehensive service should be carried out AT LEAST ONCE A YEAR.
  Fill in the Benchmark log book and leave completed with the customer.

SECTION 7 SERVICING INSTRUCTIONS

benchmark™

The code of practice for the installation, commissioning & servicing of central heating systems

Ravenheat are a member of the Benchmark initiative and fully supports the aims of the programme. Benchmark has instructed to improve the standards of installation and commissioning of central heating systems in the UK and to encourage in the regular servicing of all central heating systems to ensure safety and efficiency.

7.1 SERVICING

7.1.1 To ensure continued efficient operation of the appliance it is necessary to carry out servicing and cleaning at regular intervals, The frequency of cleaning will depend upon the particular installation conditions and usage but in general, once per year should be adequate.

WARNING

Before the start of any servicing or replacement of components always isolate electricity supply to the appliance and always turn off the appliance gas supply at the gas service cock.

Data badge position - lower left hand sub frame.

- The following notes apply to the appliance and its controls but it should be remembered that attention must also be paid to the heating and hot water circuits with special attention to radiator valves, thermostats, clocks, leaking hot water taps etc.
- Where it is necessary to replace a gas ket that relies on adhesive for securing - this adhesive will be supplied with the gasket as a spare item.
- In all cases prior to servicing, remove the outer case (sect. 5.4). Operate the appliance by turning the boiler thermostat up and down and observe the main burner.
- Check that the flame covers all the flame ports and is of a light blue colour. Yellow flames and excessive lifting of flames indicate poor combustion.
- **IMPORTANT:** After completing any servicing or replacement of gas carrying components it is essential that a test for gas soundness is always carried out along with functional checks in operation.

7.2 TO INSPECT AND CLEAN THE APPLIANCE

7.2.1 Before carrying out cleaning operation, cover the electrical control panel with a piece of waterproof material to protect it from debris,

7.2.2 Inspect the heat exchanger for any blockage. Deposits of any material should be brushed away using a soft brush.
NOTE: Do not use brushes with metallic bristles.

7.2.3 Examine internal pipe-work connections and automatic air vent for any water leaks. Rectify if necessary.

7.2.4 Examine the combustion chamber insulating material and renew if damaged (sect. 7.9).

7.2.5 Remove and examine the main burner injector and pilot injector clean or renew, as necessary (sec. 7.12 & 7.14).

7.2.5.1 Inspect the main burner and remove any deposit with a soft brush. Check the electrodes for damage or deterioration, clean or renew as necessary. Ensure that the spark gaps are correct to dimensions specified in sec. 7.15.

7.2.6 Inspect the secondary condensate heat exchanger. Deposits can be cleared by

removing and flushing out the exchanger. Inspect the siphonic condensate trap for a blockage. Any deposits should be flushed out (Fig. 90).

7.2.6.1 To remove condensate trap (sect. 5.4). Pull forward the trap (Fig. 90). Unscrew the earth wire, and the sensor. Replace in reverse order.

7.2.7 Examine the fan for any mechanical damage, check to ensure free running of the fan wheel. Clean the wheel-if necessary with a soft brush. Check sealing gasket and renew if damaged (sect. 7.6).

7.2.8 Examine flue duct and flue hood and ensure that there is no obstruction. Examine the gasket at the entry into the flue duct.

7.2.9 It is essential that a good seal is made at the outlet to the fan, renew this gasket if there is any sign of damage or deterioration.

7.3 TO REMOVEIREPLACETHE FRONT PANEL OFTHE CASING (Fig. 19 & 20)

7.3.1 Remove the 2 screws that secure the upper part of the front panel of the casing. Lift the front panel few millimeters to the top, until it is free from the slot and remove panel.

7.4 TO REMOVE/REPLACETHE COMBUSTION CHAMBER COVER

7.4.1 Remove the front casing panel (sect. 7.3).

7.4.2 Unscrew all the screws that fasten the cover to the chamber body and put them into a container so that they don't get lost.

7.4.3 Detach the cover, being careful not to damage the seal.

7.4.4 Reassemble in reverse order. Ensure good seal of cover when replacing.

7.6 TO REMOVE/REPLACETHE FAN ASSEMBLY (Fig. 58)

7.6.1 Remove front casing (sect. 7.3). Remove combustion chamber front cover as in (sect. 7.4).

7.6.2 Disconnect the electrical connections from the fan motor.

7.6.4 Support the fan and remove the two fixing screws and bracket from the front of the flue hood. Carefully withdraw from condensing heat exchanger then from the appliance. Place in a safe place until required. Reassemble in reverse order. Ensure wires are connected correctly (Fig. 94).

7.6.5 TO REMOVE/REPLACE CONDENSING HEAT EXCHANGER FIG. 54-55

7.6.5.1, Remove front casing (sect. 7.3). Remove combustion chamber front cover as in (sect 7.4). Remove lower grating by unscrewing the two screws (Fig. 21).

7.6.5.2 Close the ON/OFF valves for the heating. Drain the heating system from the drain point mounted system (Fig. 93).

7.6.5.3 Remove the fan (sect.7.6).

7.6.5.4 Disconnect 4 unions for the heating water pipelines (Fig. 54) and remove the two short pipes.

7.6.5.5 Remove screw holding heat exchanger to chamber. Disconnect condensing discharge pipe by pulling off the pushfit connector at top rear of boiler (Fig. 54).

7.6.5.6 Pull the heat exchanger down and slightly forward until it comes out of the connection from chamber (Fig. 55).

7.6.5.7 Replace in reverse order. Taking care to refit discharge pipe at rear.

IMPORTANT: When replacing heat exchanger new seals must be used.

7.7 TO REMOVE/REPLACE THE FLUE HOOD (FIG. 60)

7.7.1 Remove front casing (sect. 7.3). Remove combustion chamber front cover as in (sect. 7.4).

7.7.2 Remove the fan (sect. 7.6).

7.8.11 Remove condensing heat exchanger (sect. 7.65)

7.7.3 Remove the three screws on the front that fasten hood to the combustion chamber.

7.7.4 Remove the two screws at the rear of hood.

7.7.6 Replace in reverse order.

7.8 TO REMOVE THE HEAT EXCHANGER (FIG. 62-63-64)

7.8.1 Remove front casing (sect 7.3). Remove combustion chamber front cover as in (sect. 7;4). Remove the lower grating (sect.5.4.2). Lower the instrument panel (sect. 5.4.3 & 4).

7.8.2 Remove the two sides of the casing by slightly lifting them and sliding them towards the top of the appliance, to release them from their upper suspension hooks.

7.8.4 Remove the fan (sect. 7.6).

7.8.5 Remove condensing heat exchanger (sect. 7.6.5).

7.8.6 Remove the flue hood (sect. 7.7).

7.8.8 Remove the automatic air vent (Fig. 92).

7.8.9 Disconnect unions for two heating (right side of boiler) water pipelines (Fig. 62).

7.8.10 Unscrew the rings that fasten the heat exchanger to the combustion chamber.

7.8.11 Remove the two side insulation panels at top of heat exchanger (Fig. 63).

7.8.12 Pull the heat exchanger up until its flow connections come out from the combustion chamber and then remove it (Fig. 64).

7.8.13 Replace in reverse order.
Ensure correct wire position (Fig. 94).

IMPORTANT: When replacing a heat exchanger new seals must be used.

7.9 TO REMOVE/REPLACE COMBUSTION CHAMBER INSULATION PANELS (Fig. 63).

7.9.1 Remove casing front panel (sect. 7.3).
Remove combustion chamber front cover (sect. 7.4).

7.9.2 Remove fan (sect. 7.6).

7.9.3 Remove condensing heat exchanger (sect. 7.6.5).

7.9.4 Remove the flue hood (sect. 7.7).

7.9.5 Remove main burner (sect. 7.15).
Remove top insulation pieces at sides.
Remove 2 screws securing combustion chamber to rear of boiler.
Lower chamber carefully remove all insulation panels.

7.9.6 Replace in reverse order.

Fig. 54

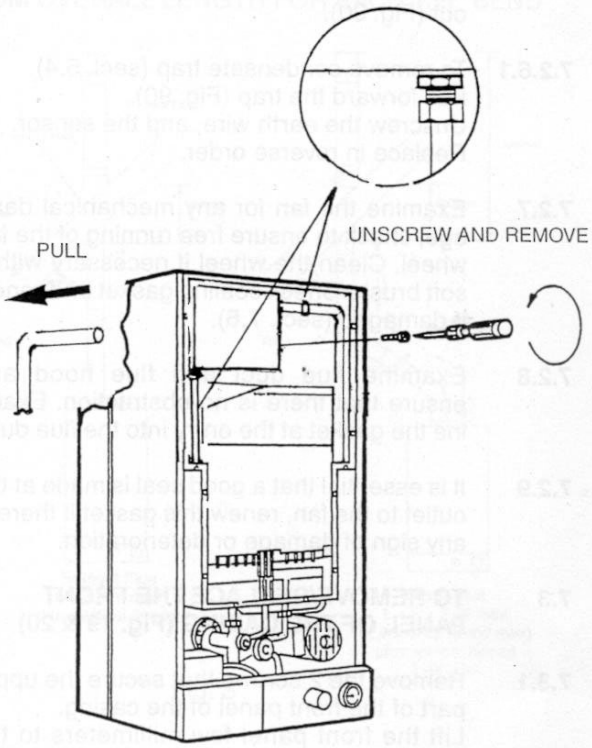

Fig. 55

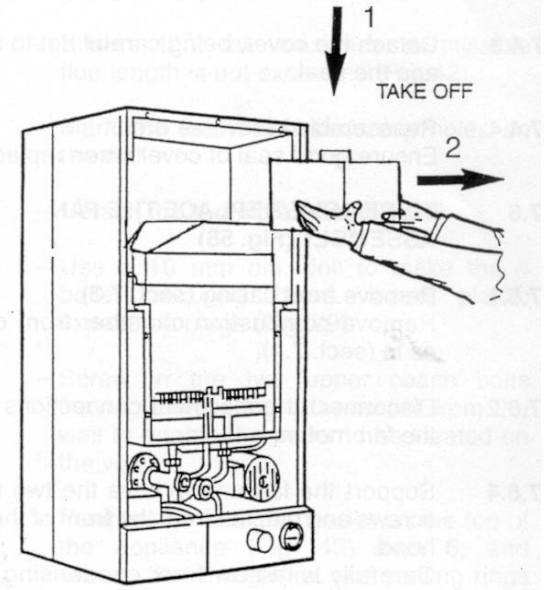

7.10 TO REPLACE THE ELECTRODE (Fig. 66)

7.10.1 Remove front casing (sect. 7.3). Remove combustion chamber front cover (sect. 7.4).

Fig. 56

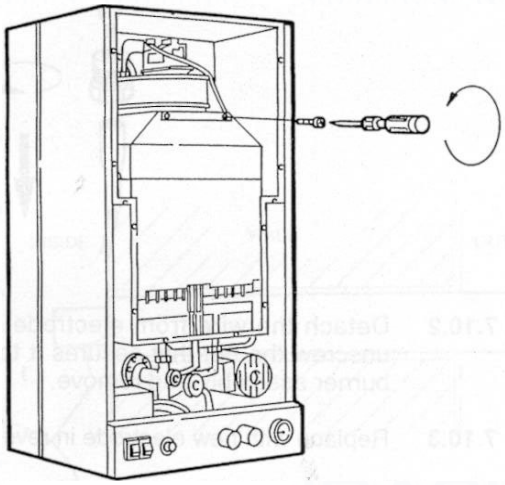

Fig. 60

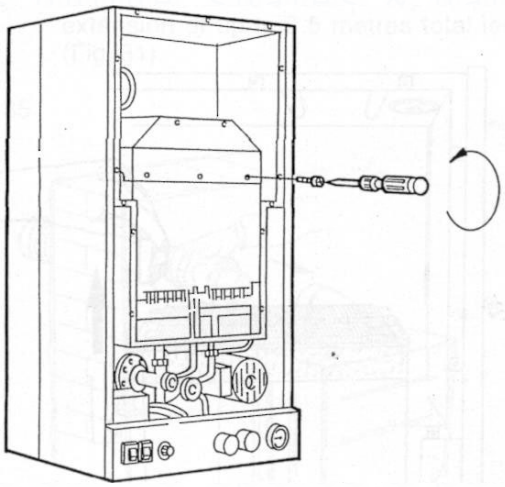

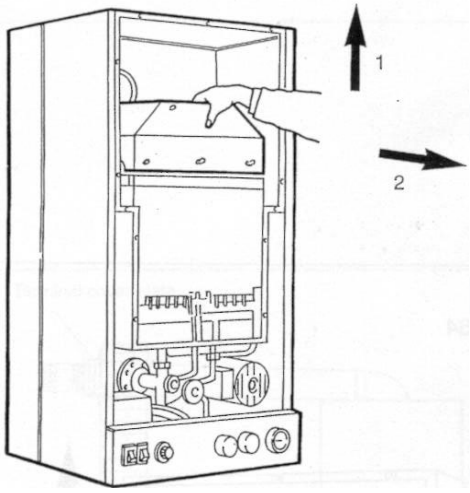

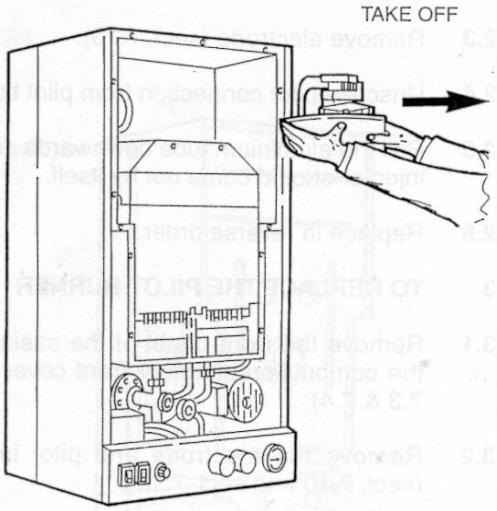

Fig. 62

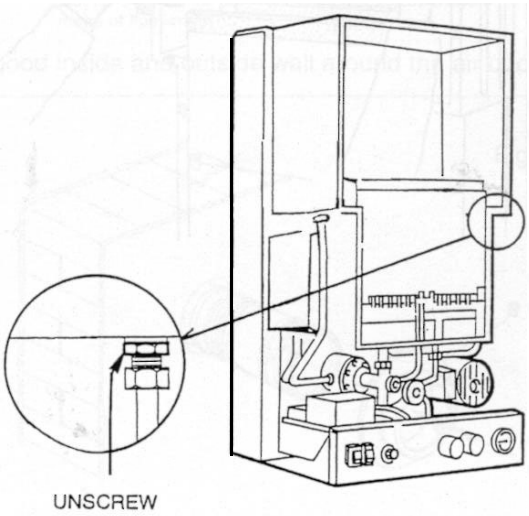

Fig. 63

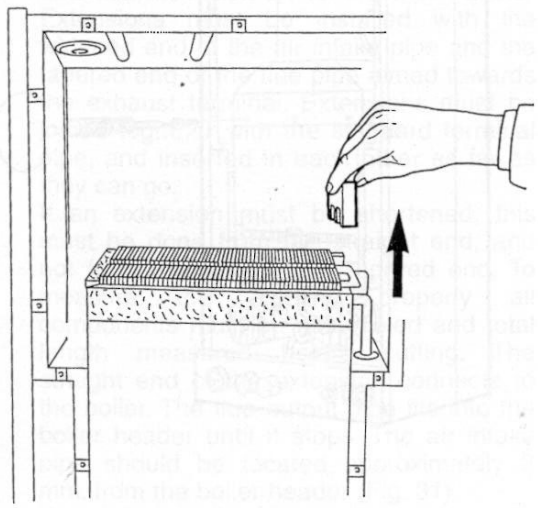

Fig. 64

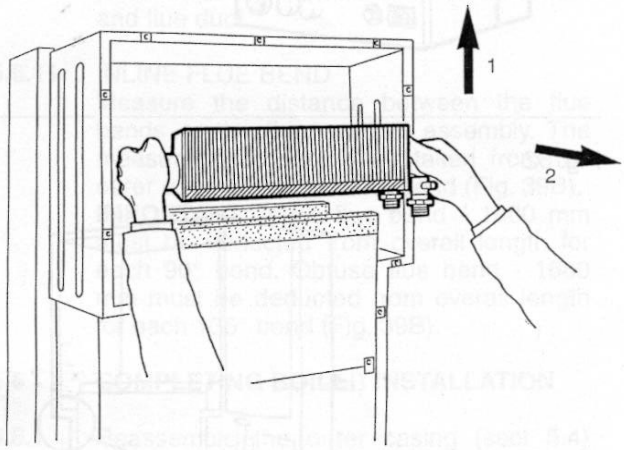

Fig. 66

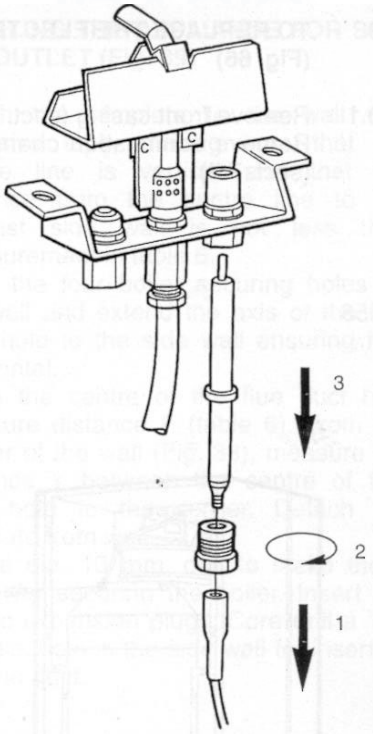

7.10.2 Detach the wire from electrode and then unscrew the nut that secures it to the pilot burner assembly and remove.

7.10.3 Replace with new electrode in reverse order.

7.12 TO REPLACETHE PILOT INJECTOR (Fig. 68)

7.12.1 Remove the front panel of the casing and the combustion chamber front cover (sect. **7.3 & 7.41.**
Remove the lower sect. 5.4.2 (Fig. 21)

7.12.2 Release the fitting that secures pilot pipe at the gas valve.

7.12.3 Remove electrode (sect. 7.10).

7.12.4 Unscrew pilot connection from pilot burner.

7.12.5 Pull the aluminium tube downwards and the injector should come out by itself.

7.12.6 Replace in reverse order.

7.13 TO REPLACETHE PILOT BURNER

7.13.1 Remove the front panel of the casing and the combustion chamber front cover (sect. **7.3 & 7.4).**

7.13.2 Remove the electrode and pilot injector (sect. 7.10 and sect. 7.12).

7.13.4 Remove the two screws securing pilot burner to main burner (Fig. 69).

7.13.5 Replace in reverse order.

7.14 TO REMOVE/REPLACE THE MAIN INJECTORS

7.14.1 Remove the front panel of the casing and the combustion chamber front cover (sect. 7.3 & 4). Remove the pilot burner assembly as described in sect. 7.13.

7.14.2 Unscrew the union (Fig. 70).

7.14.3 Unscrew the 4 screws securing the injector manifold to the burner (Fig. 71).

7.14.4 Pull the manifold up and out from the combustion chamber (Fig. 72).

7.14.5 Unscrew and replace the injectors and their seals (Fig. 73).

7.14.6 Replace in reverse order.

7.14.7 Reocate the grommet, sealing the gas supply pipe to the casing taking care not to damage it. Replace if necessary.

Fig. 68

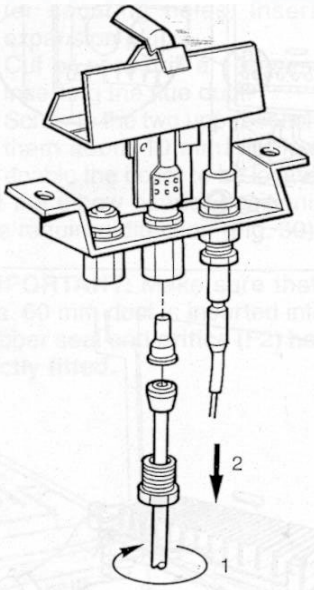

Fig. 69

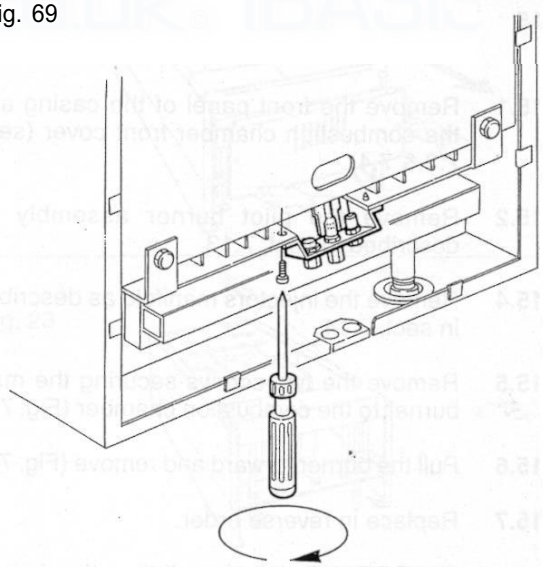

Fig. 70

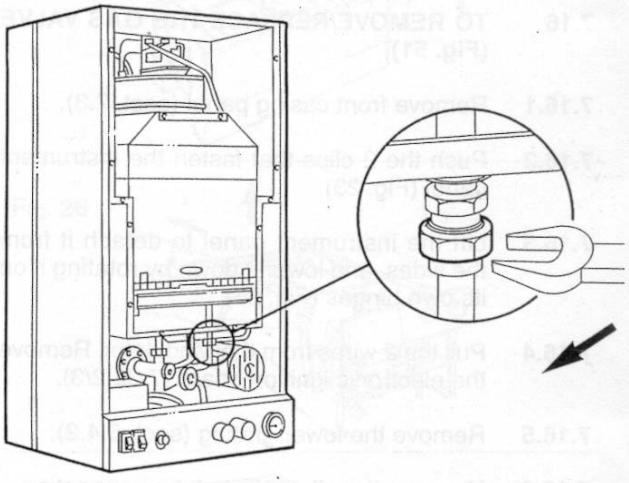

Fig. 71

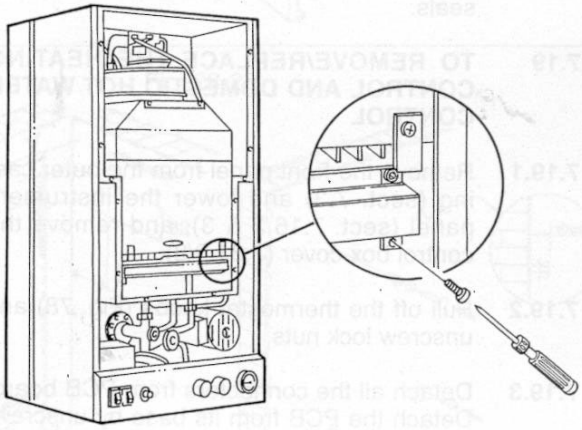

7.15 TO REMOVE/REPLACE THE MAIN BURNER

7.15.1 Remove the front panel of the casing and the combustion chamber front cover (sect. **7.3 & 7.4).**

7.15.2 Remove the pilot burner assembly as described in sect. 7.13.

7.15.4 Remove the injectors manifold as described in sect. 7.14.

7.15.5 Remove the two screws securing the main burner to the combustion chamber (Fig. 74).

7.15.6 Pull the burner forward and remove (Fig. 75).

7.15.7 Replace in reverse order.

IMPORTANT: When refitting the burner make sure that the pins at the rear of the combustion chamber locate into the slots made on the rear of the burner.

7.16 TO REMOVE/REPLACE THE GAS VALVE (Fig. 51)

7.16.1 Remove front casing panel (sect. 7.3).

7.16.2 Push the 2 clips that fasten the instrument panel (Fig. 23).

7.16.3 Lift the instrument panel to detach it from the sides, and lower it down by rotating it on its own hinges (Fig. 25).

7.16.4 Pull the 2 wires from the Modulator. Remove the electronic ignition board (7.32.2/3).

7.16.5 Remove the lower grating (sect. 5.4.2).

7.16.6 Unscrew the pilot burner tube connection.

7.16.7 Remove the eight screws (four per side) that connect the gas valve to the gas pipelines and then remove it from its seat.

7.16.6 Replace in reverse order, always using new seals.

7.19 TO REMOVE/REPLACE THE HEATING CONTROL AND DOMESTIC HOT WATER CONTROL

7.19.1 Remove the front panel from the outer casing (sect. 7.3) and lower the instrument panel (sect. 7.16.2 & 3), and remove the control box cover (7.31.2/3).

7.19.2 Pull off the thermostat knobs (Fig. 78) and unscrew lock nuts.

7.19.3 Detach all the connectors from PCB board. Detach the PCB from its base by unscrewing the 6 screws.

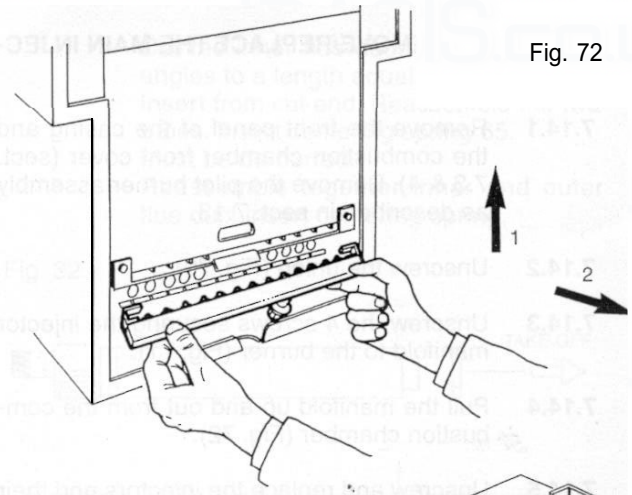

Fig. 72

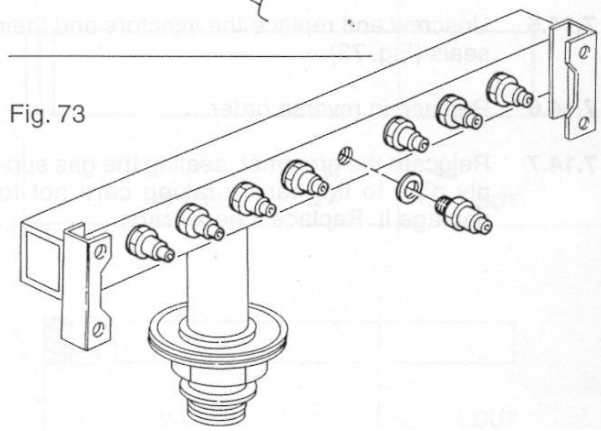
Fig. 73

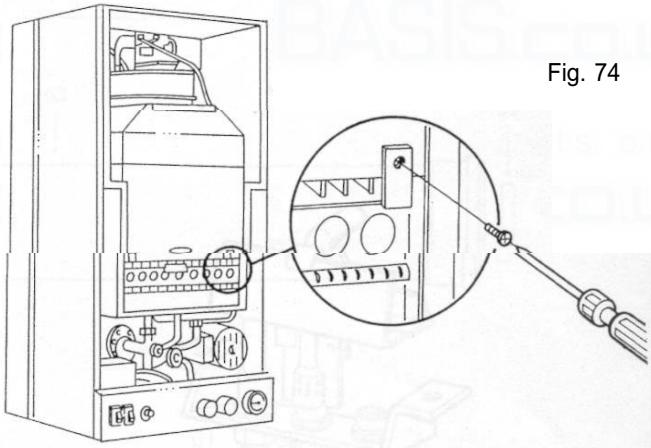
Fig. 74

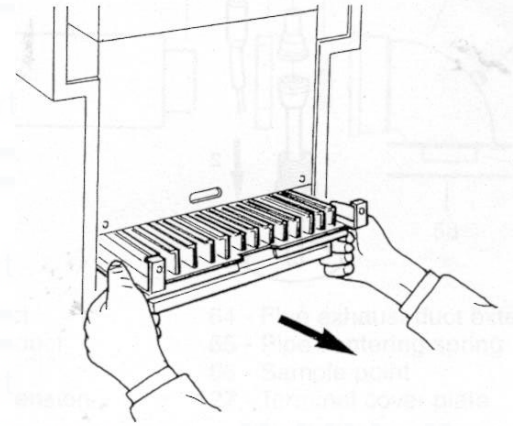
Fig. 75

7.19.6 Replace in reverse order.

7.20 TO REMOVE/REPLACE THE MAIN SWITCH (Fig. 82).

7.20.1 Remove the front panel from the outer casing (sect. 7.3) and lower the instrument panel (sect. 7.16.2 & 3), and remove the control box coyer (7.31.213).

7.20.2 Pull off the switch knob. Remove the switch out from the instrument panel by pressing the clamp springs (Fig, 82).

7.20.3 Detach the wires that connect to the switch - make sure that these wires are later reconnected to the same poles (Fig. 94).

7.20.4 Replace in reverse order.

7.21 TO REMOVE/REPLACE THE WATER PRESSURE GAUGE (Fig. 83).

7.21 .1 Remove the front panel from the outer casing (sect. 7.3) and lower the instrument panel (sect. 7.16.2 & 3).
Remove the lower grating (sect. 5.4.2).

7.21.2 Close the heating system on/off valves and drain the water from the drain point on the heating system (Fig. 93).

7.21.3 Unscrew the fitting that secures the pressure gauge probe.

7.21.4 Remove the gauge from the instrument panel by pressing its fastening springs.

7.21.5 Replace in reverse order.

7.22 TO REMOVE/REPLACE THE OVERHEAT THERMOSTAT

7.22.1 Remove the front panel from the outer casing (sect. 7.3) and lower the instrument panel (sect. 7.16.2 & 3), and remove the control box cover (7.31.2/3).

7.22.2 Remove lower grill and right side of the casing (sect. 5.4.2 & 5).

7.22.3 Unscrew the plastic cover and locknut that fastens the overheat thermostat and remove it.

7.22.4 Remove the three wires that connect to the overheat thermostat - making sure that these wires will subsequently be reconnected to the same poles (Fig. 94).

7.22.5 Remove the split pin and pull the thermostat sensor from its pocket,

7.22.7 Replace in reverse order.

7.23 TO REMOVE/REPLACE THE ELECTRIC CONTROL BOARD (PCB)

7.23.1 Remove the front panel from the outer casing (sect. 7.3) and lower the instrument panel (sect. 1 .16.2 & 3).

7.23.2 Unscrew the 2 screws holding the control box cover and remove.
Disconnect mains cables and any other connections (room thermostat and frost thermostat if fitted).

7.23.3 Detach the connectors from the board

7.23.4 Detach the PCB board from its base by unscrewing the six screws.

7.23.5 Replace in reverse order (ensure all electrical connections are made correctly).

7.23.6 Having replaced PCB recommission boiler on heating mode (sect. 6.15).

7.24 TO REMOVE/REPLACE THE DIFFERENTIAL PRESSURE SWITCH (Fig. 87).

7.24.1 Remove the front panel from the outer casing and the combustion chamber front cover (sect. 7.3 & 4).

7.24.2 Detach the wires that connect to the pressure switch, make sure that these wires are later reconnected to the same poles (Fig. 94).

7.24.3 Unscrew the two screws that fasten the pressure switch to the back of combustion chamber.

7.24.4 Remove the two silicone tubes

7.24.5 Ensure tubes are connected correctly (Fig. 87) avoiding kinks.

7.24.6 Replace in reverse order ensuring that the - tapping is connected to the tube terminating inside the case and the + tapping is connected to the tube terminating at flue ring (Fig. 87 and 94).

7.25 TO REMOVE/REPLACE THE PUMP (Fig. 88)

7.25.1 Remove the front panel from the outer casing (sect. 7.3) and lower the instrument panel (sect. 7.16.2 & 3).

7.25.2 Remove lower grill right side of the casing (sect. 5.4.2 & 5), lower the electric box (sect. 7.16.2 & 3).

7.25.3 Close the on/off valves on the heating circuit and drain at drain point water from the boiler (Fig. 93).

7.25.4 Remove the terminal covers and detach the supply wires (Fig. 88).

7.25.5 Unscrew the two hexagonal nuts that fasten the pump to its pipes and remove the pump.

NOTE: It may be necessary to loosen the flow pipe at the heat exchanger to replace the pump gaskets.

7.25.6 Always use new seals when re-fitting the new pump.

7.25.7 Replace in reverse order.

Fig. 78

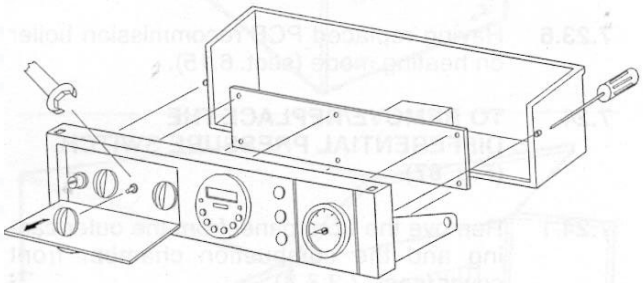

Fig. 79

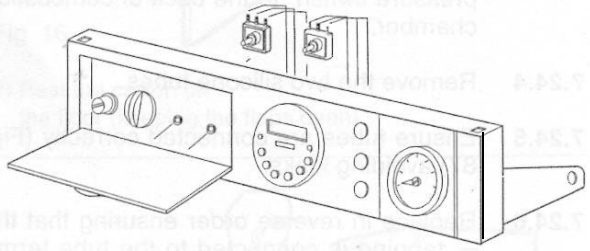

Fig. 81

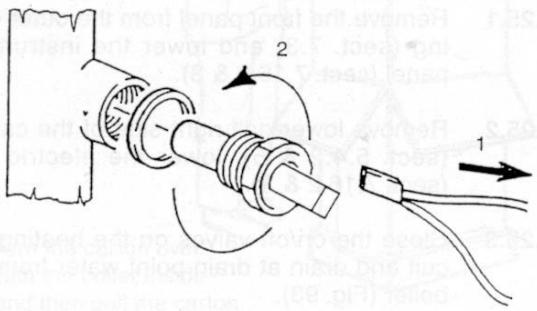

IMPORTANT:

7.258 Make sure that the arrow that indicates the direction of flow aims from the bottom upwards.

7.25.9 Replace wires and cover ensuring that connection wire br=L and bl=N.

7.25.10 Refill the heating system as described in the sect. 6.4 & 5 and check for leaks.

7.27 TO REMOVE/REPLACE THE CENTRAL HEATING AND/OR HOT WATER CONTROLTHERMISTOR

7.27.1 Remove the front panel from the outer casing (sect. 7.3) and 'lower the instrument panel (sect. 7.16.2).

7.27.2 Remove left/right side of casing (sect. 5.4).

7.27.3 Remove the wires that connect the thermistor (Fig. 81).

7.27.4 Close the on/off valves for the heating circuit and the hot water circuit. Drain the boiler at drain point (Fig. 93) and drain hot water from the lowest hot water tap and drain point on DHW inlet cock (Fig. 46).

7.27.5 Undo the nut and withdraw the sensor (Fig. 81) from its pocket.

7.27.6 Replace in reverse order.

Fig. 82

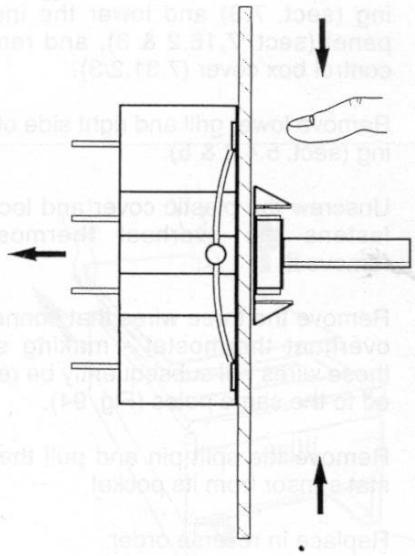

Fig. 83

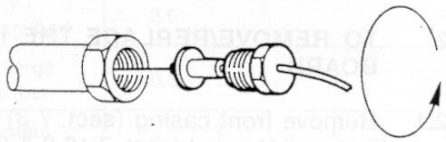

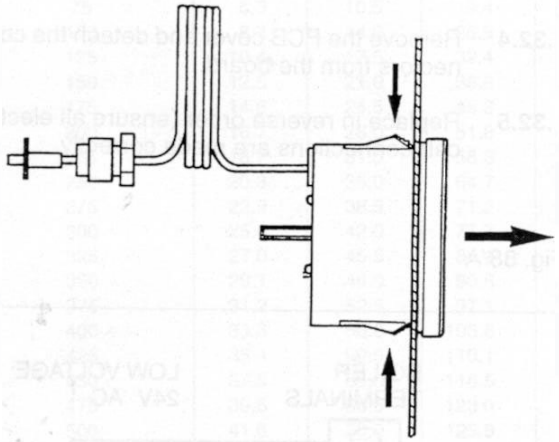

7.28 TO REMOVE/REPLACE THE CENTRAL HEATING EXPANSION VESSEL

In the unlikely event of failure of the central heating expansion vessel it is recommended a suitable expansion vessel be fitted external to the boiler. It should be positioned on the return pipe and as close to the boiler as possible (Fig. 7).

However, if it is necessary to replace the central heating expansion vessel the boiler must be removed from the wall as follows.

7.28.1 Remove the front panel from the outer casing (sect. 7.3) and lower the instrument panel (sect. 7.16.2 & 3) and remove the control box cover (sect. 7.31.2/3).

Remove the lower grating (sect. 5.4.2).

Remove the two sides of the casing (sect. 5.4.5).

7.28.2 Close the on/off valve on the domestic cold water, central heating and gas supply.

7.28.3 Drain domestic water from the lowest hot water tap and drain point on DHW inlet cock (Fig. 46).

7.28.4 Drain the boiler (Fig. 93)

7.28.5 Disconnect all pipework connected to boiler.

7.28.7 Disconnect mains cables and any other connections (room thermostat, programming clock).

7.28.8 Remove the duct proceeding in reverse order as described in (sect. 5.5 or 5.7).

7.28.9 Remove the 2 lower coach bolts and release 2 top coach bolts then remove boiler from the wall.

7.28.10 Unscrew the nut that connects the expansion vessel and remove it (Fig. 91).

7.28.11 Remove the screw supporting expansion vessel (Fig. 91).

7.28.12 Remove the expansion vessel.

7.28.13 Replace all the components in reverse order using new seals.

7.28.14 Fill the system as described in the sect. 6 and check for leaks.

7.29 TO REMOVE/REPLACE THE AUTOMATIC AIR VENT (Fig. 92)

7.29.1 Remove the front panel from the outer casing and the combustion chamber front cover (sect. 7.3 & 4).

7.29.2 Remove the lower grating (sect. 54.2).

7.29.3 Remove the fan assembly and the flue hood (sect. 7.6 & 7.7).

7.29.4 Close the on/off valves for the central heating circuit and drain the water from the boiler drain point (Fig. 93).

7.29.5 Unscrew and remove the plastic cap that protects the valve vent hole.

7.29.6 Disconnect the unions 1 (Fig. 92) slightly turn and remove auto air vent.

7.29.7 Replace in reverse order, using new seals.

7.29.8 Fill the system as described in the sect. 6.4 & 5 and check for leaks.

7.30 TO REMOVE/REPLACE THE PRESSURE RELIEFVALVE (Fig. 93)

7.30.1 Remove the front panel (sect. 7.3) and the lower grating (sect. 5.4.2) from the outer casing, lower the instrument panel (sect: 7.16.2 & 3).

Remove right side of the casing (sect. 5.4.5).

7.30.2 Close the on/off valves for the heating system and drain the water from the drain point (Fig. 93).

7.30.3 Unscrew the screw from its body, clean or replace. Replace in reverse order.

7.30.4 Fill the system as described in the (sect. 6.4 & 6.5) and check for leaks.

7.31 TO REMOVE/REPLACE TIME CLOCK (Fig. 88/A)

7.31.1 Remove the front panel from the outer casing (sect. 7.3) and lower the instrument panel (sect. 7.16.2 and 3).

7.31.2 Remove control box cover (Sect. 7.23.2)

7.31.3 Remove control board (Sect. 7.23.2) from panel.

7.31.4 Remove two clips securing the timer

7.31.5 Carefully remove the four wires connecting timer by pulling spade connectors from timer.

7.31.6 Replace in reverse order (ensure all electrical connections are made correctly) (Fig. 88/A).

7.32 TO REMOVE/REPLACE THE IGNITION BOARD

7.32.1 Remove front casing (sect. 7.3) lower the instrument panel (sect. 7.16.2 & 3),.

7.32.2 Remove the screw from the ignition box cover.

7.32.3 Detach the ignition box from its base on the gas valve.

7.32.4 Remove the PCS cover and detach the connectors from the board.

7.32.5 Replace in reverse order (ensure all electrical) connections are made correctly.

Fig. 87

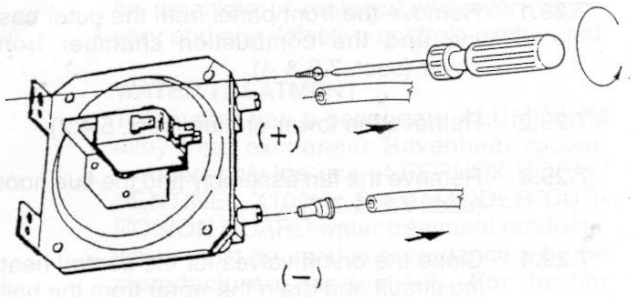

Fig. 88

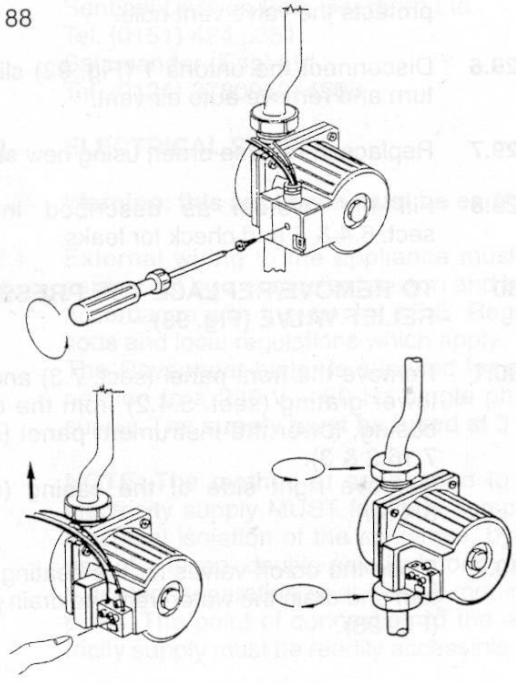

Fig. 88/A

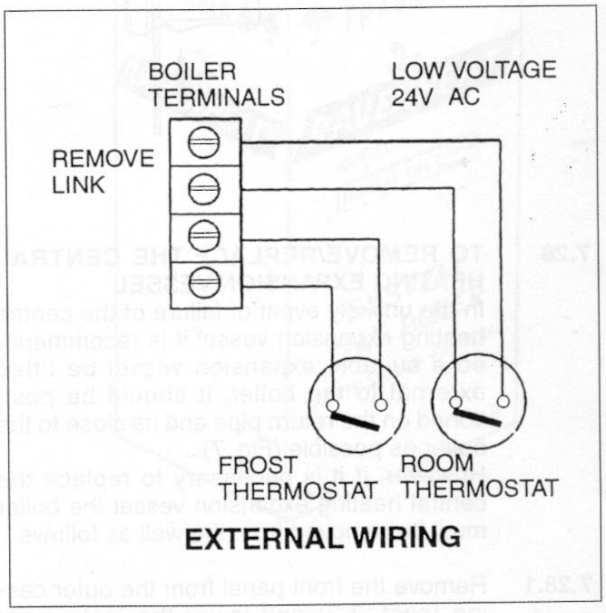

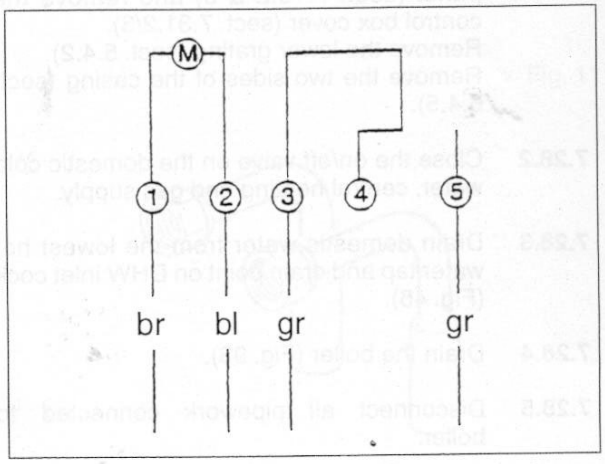

Fig. 90

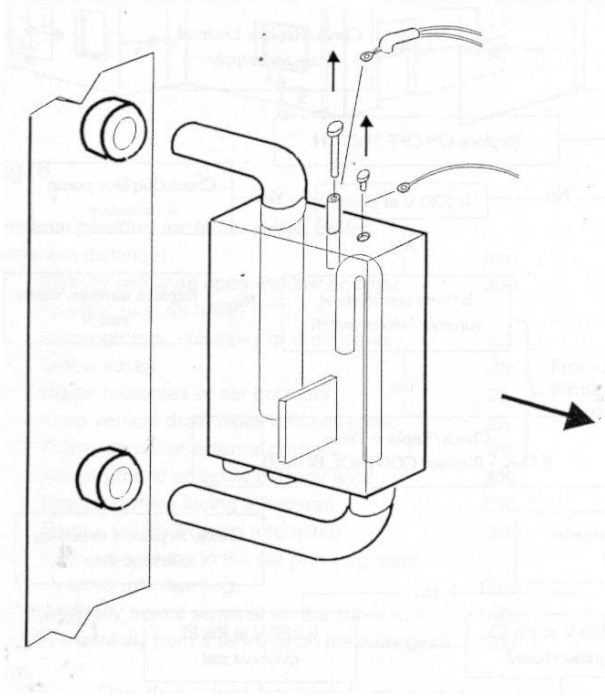

Fig. 92

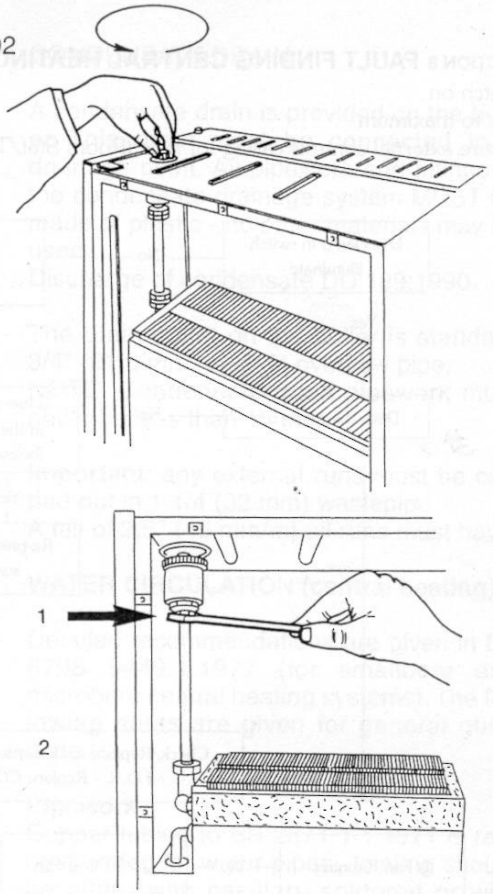

Fig. 91

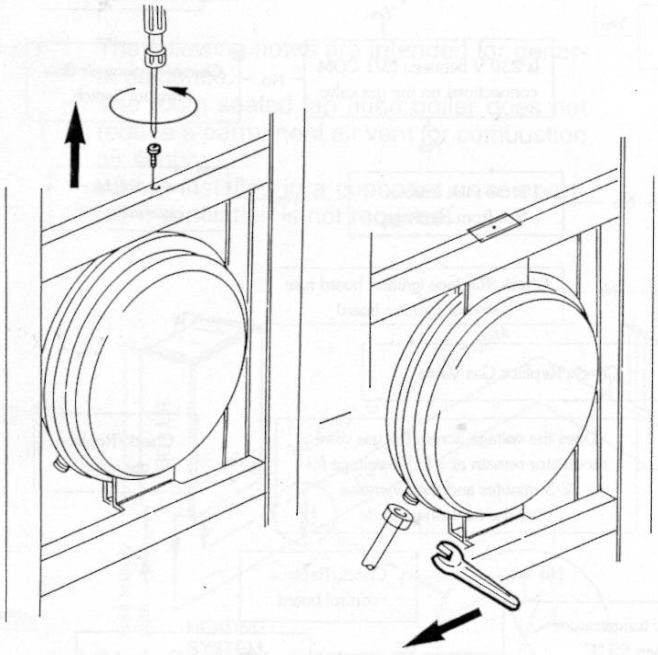

Fig. 93

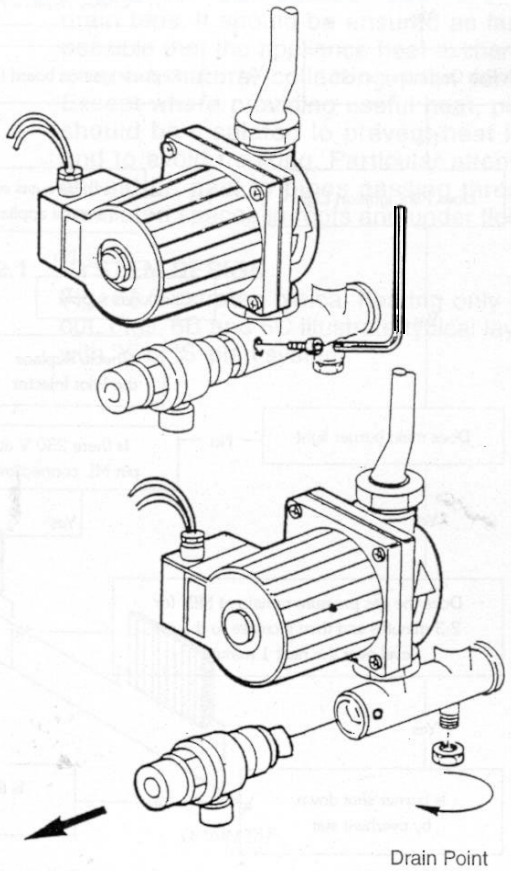

SECTION 8 FAULT FINDING CENTRAL HEATING

Switch on

Stat to maximum

Ensure external controls calling for heat (Room Stat/Time Clock/TRV) DHW Stat

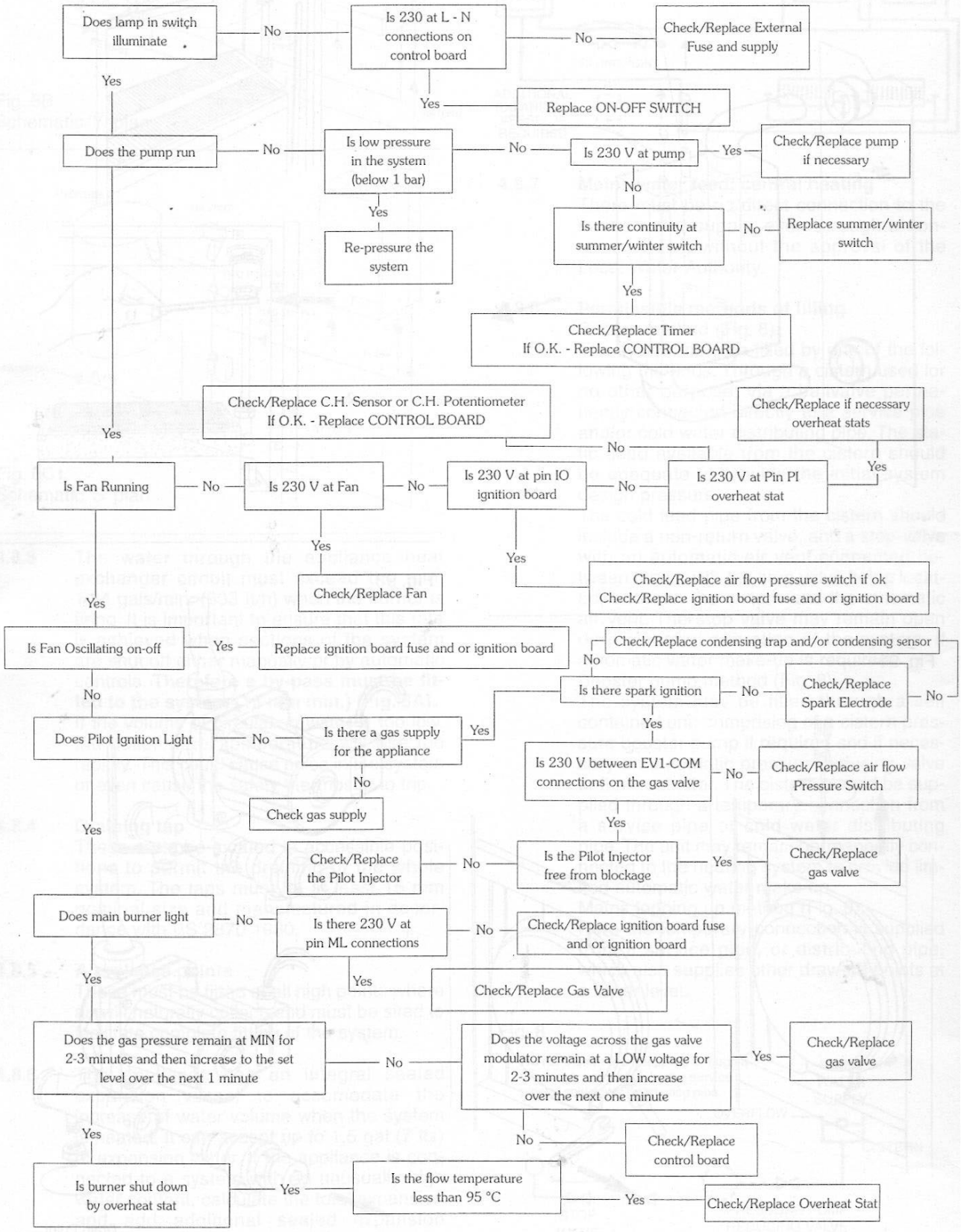

BOILER NOT OPERATIONAL ON TIMER (INTEGRAL)

Switch on/Select "Winter"/Central Heating

Stat to Maximum/Ensure External control calling for heat (Room Stat/TRV)

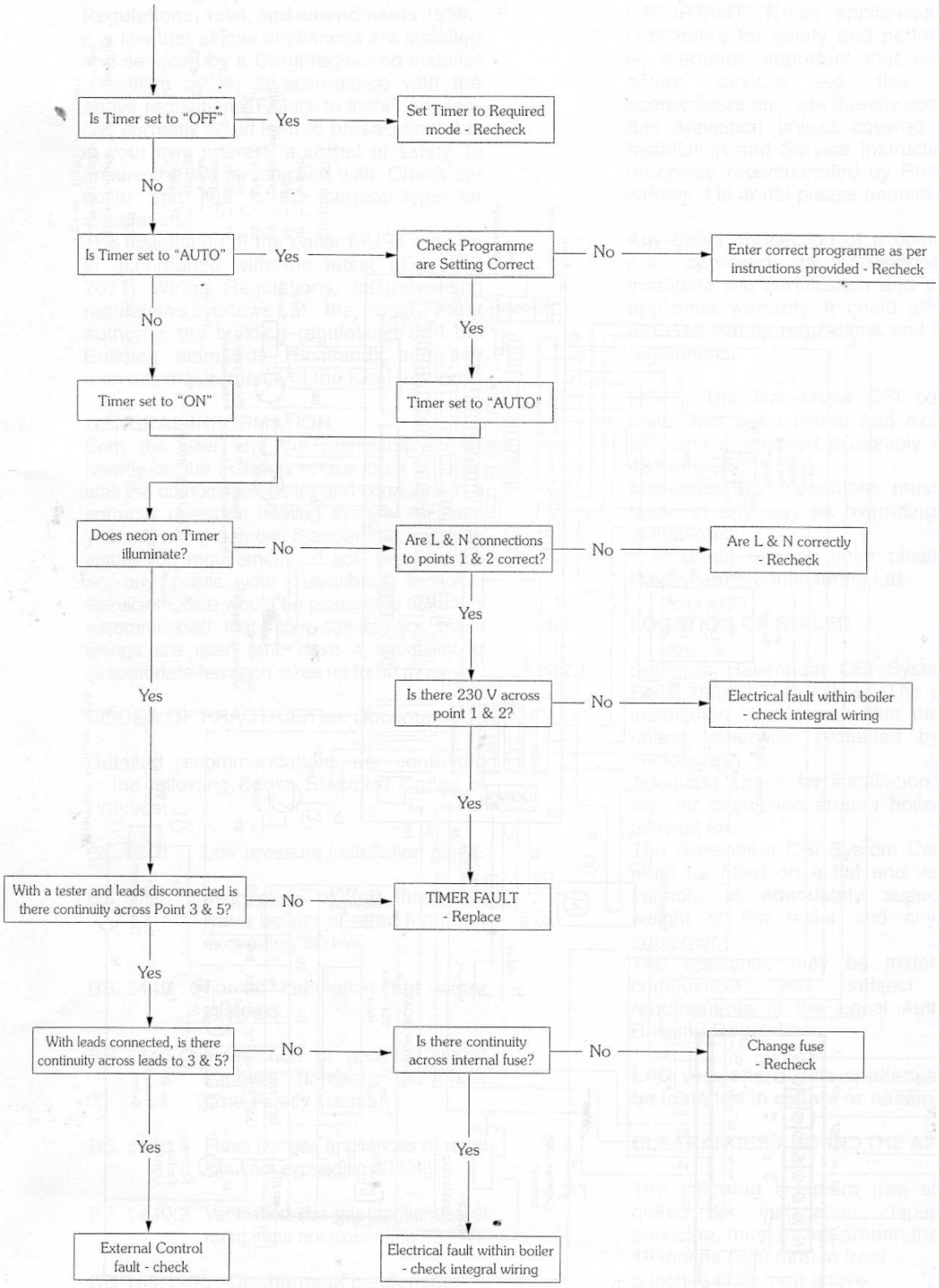

SECTION 9 ELECTRICAL SYSTEM DIAGRAM

Fig. 94

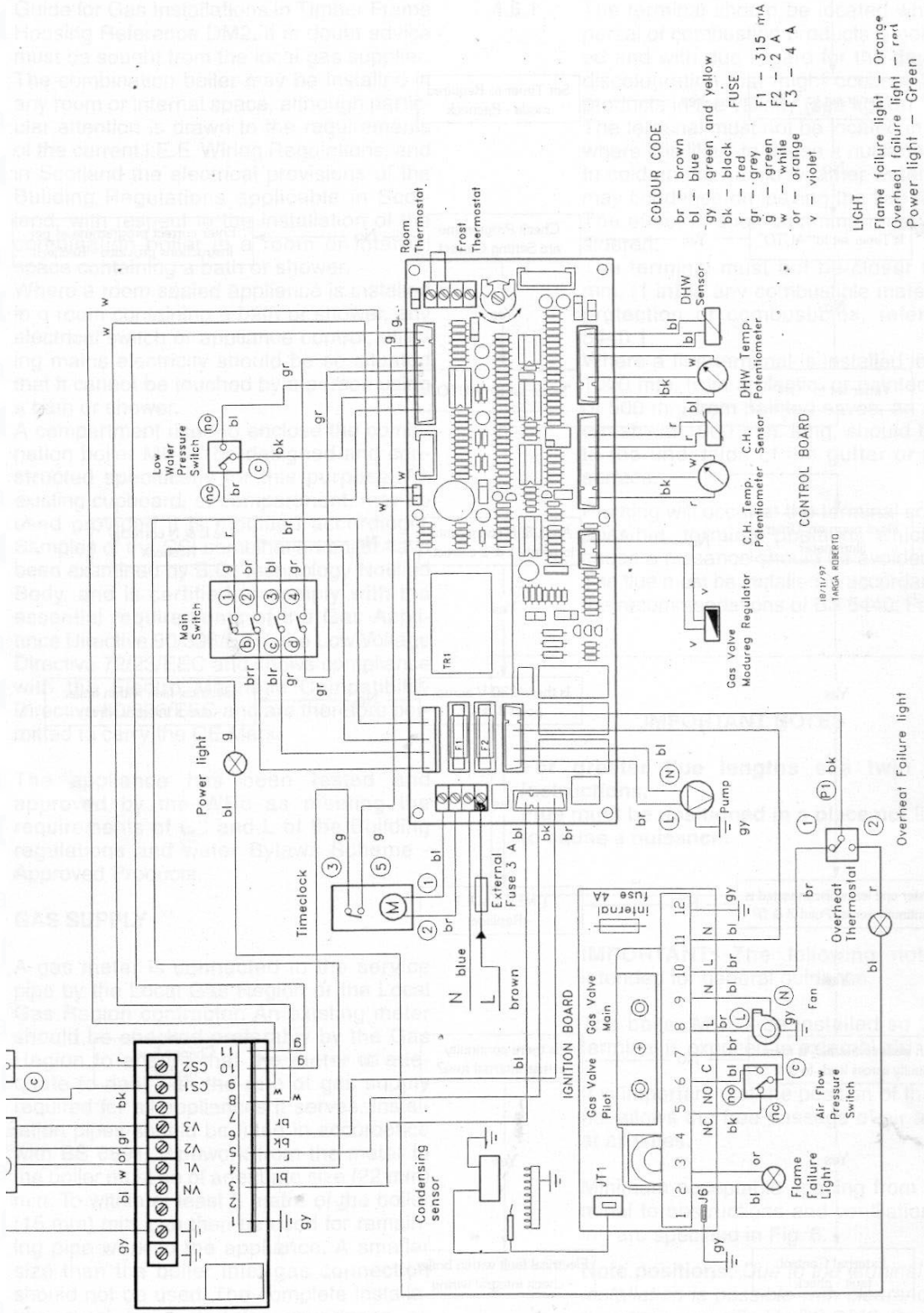

FUNCTIONAL FLOW DIAGRAM
General Layout

Fig. 95

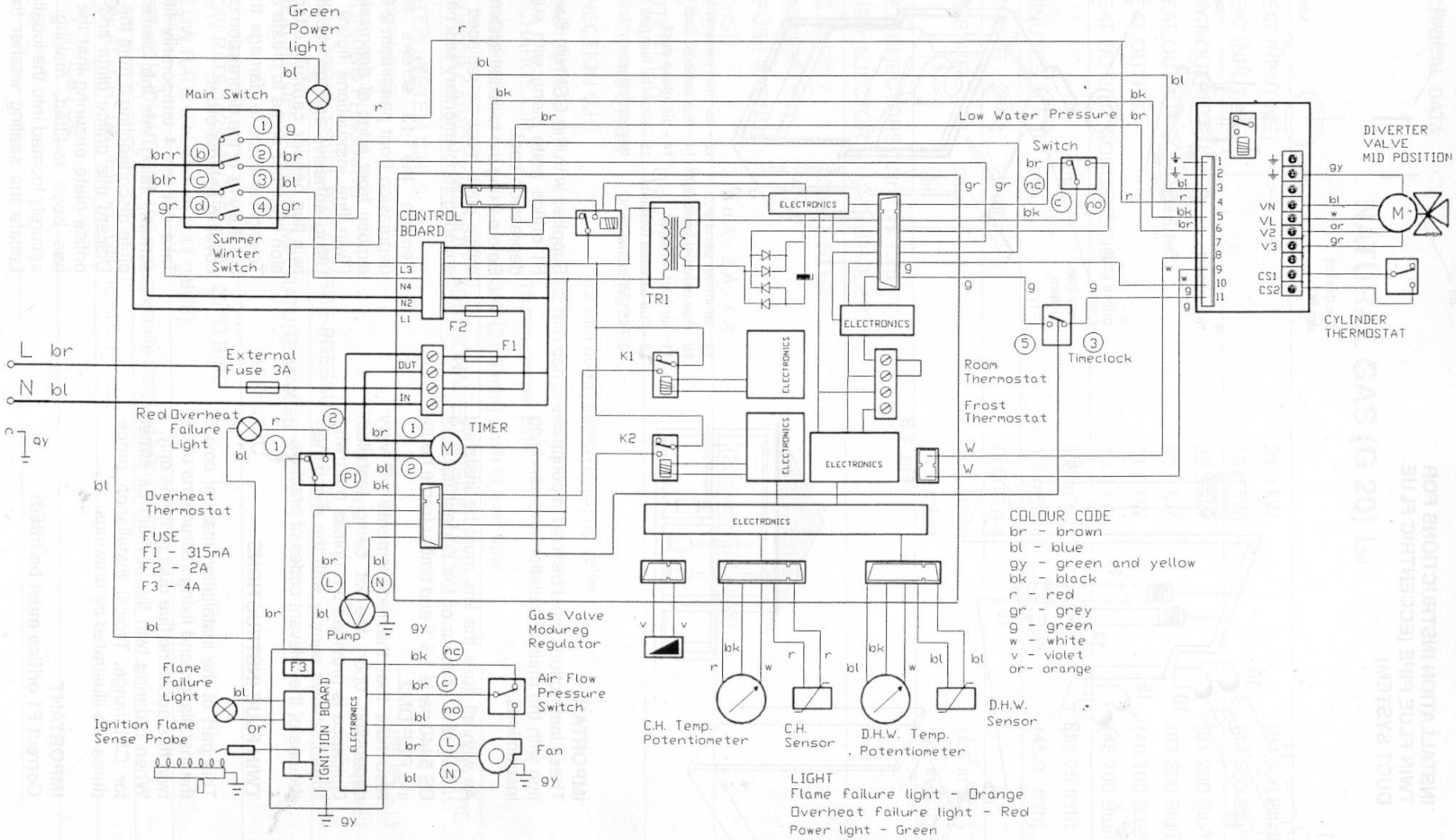

8.0 INSTALLATION INSTRUCTIONS FOR TWIN FLUE PIPE (ECCENTRIC FLUE DUCT SYSTEM)

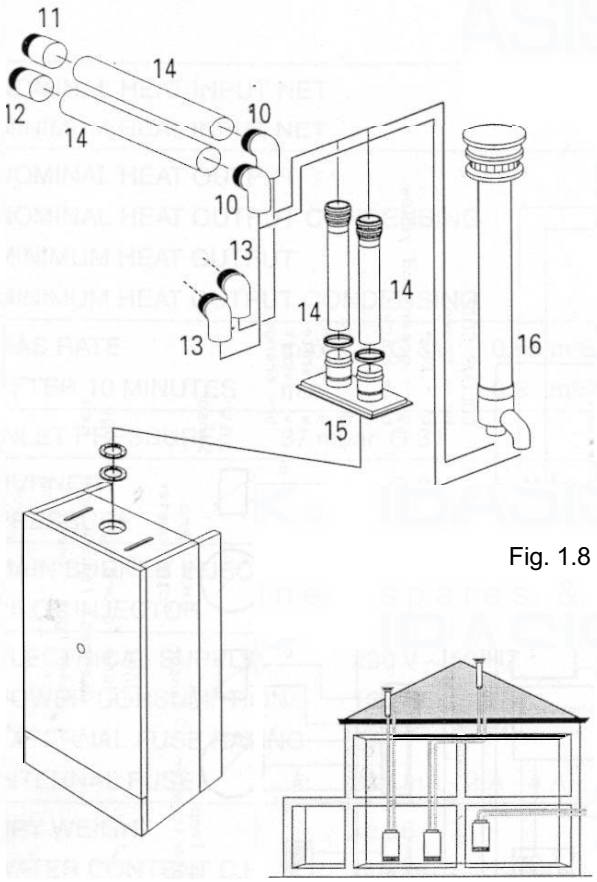

Fig. 1.8

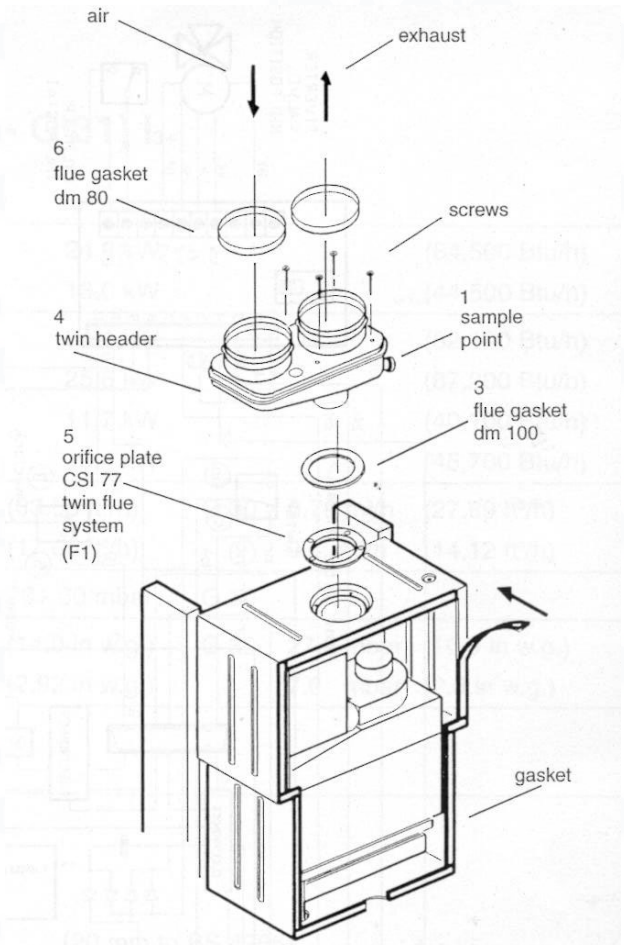

10 - air intake bend 90°
10 - flue exhaust bend 90°
11 - air inlet terminal
12 - flue exhaust terminal
13 - 45° air intake bend
13 - 45° flue exhaust bend
14 - flue exhaust duct
14 - air intake duct
15 - two-way flue gas header
16 - vertical eccentric flue exhaust duct

IMPORTANT
These instructions must be read in conjunction with the main installation and servicing instructions.

As with all flues the kits must be installed taking due account of the current issue of BS 5440 parts 1 & 2 and timber frame housing REF DMZ.
Also note that the requirements will vary depending upon the kit being installed. Guidance is provided but unless otherwise stated, always comply with the recommendations of the relevant codes of practice.

8.1 TWIN FLUE INSTRUCTIONS

This part of the installation manual covers the installation and fixing instructions of the twin flue eccentric flue duct systems only.
When ordering twin flue it must be stated for CSI range. Typical installation procedures are illustrated by drawings.

IMPORTANT
Correct F1 orifice must be fitted.

Supplied with the CSI twin flue header is a F1 orifice plate along with supplementary depression seal.
Before fixing the twin flue system the existing orifice plate must be replaced with F1 also ensuring supplementary seal has been fitted.

Remove the 13 screws securing the depression front panel item 2 figure 53A to expose front edge of depression chamber. (Twin flue instructions figure 1 adjacent). Using adhesive sponge supplied with CSI twin flue header, carefully attach to depression chamber so as to create a softer seal. Taking care not to damage the new Seat, carefully re-fit the depression chamber front cover in reverse order.

Take out the 4 temporarily fitted securing screws, lifting our the gasket and orifice plate disconnecting it from the venturi tube. Discard this orifice plate and re-fit the F1 orifice plate ensuring that the venturi tube has been re-fitted, making sure this is securely located into the locating peg.
Locate the sealing washer fixing the twin

flue header as illustrated making sure that the inner aluminium exhaust locates firmly in the outlet spigot. Make sure that the screws are satisfactorily located through the gasket seal.

Locate the 2 x 80 mm '0' rings in the twin flue header..

Figures show the versatility of this flueing system. Measurements and bends must be calculated correctly so as not to oversize maximum flue lengths.

All located '0' rings must be lubricated with a silicone grease to ensure easy, snug fit.

NOTE: Exhaust flue must slope 2° down towards the boiler 35 mm fall per metre.

Spacing Clips
Spacing clips are available on request should they be required.
NOTE: for eccentric vertical flue a 125 mm (5 in) diameter flashing plate will be required.

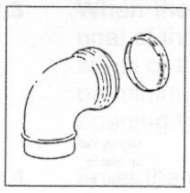

90° M/F bend consisting of,

90° elbow with '0' ring side F
80 mm dia '0' ring

135" M/F bend consisting of.

135" elbow with '0' ring side F
80 mm dia '0' ring

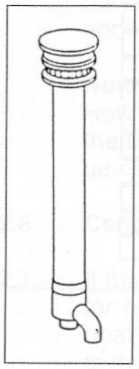

Vertical eccentric flue exhaust duct

Fig. 2.8

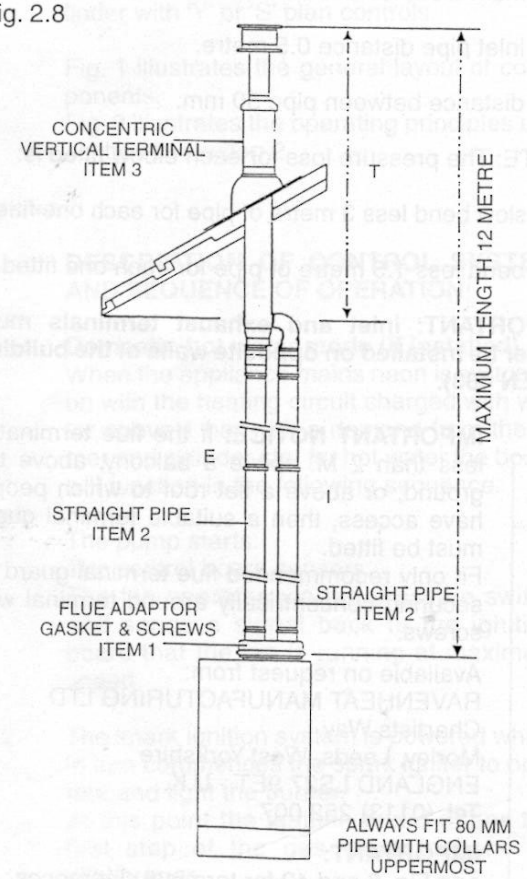

E = EXHAUST
I = INLET
T = TERMINAL

Exhaust/suction system with concentric pipes for flat or sloping roofs. Extensions with two separate pipes.

Maximum distance = I + E + T = 2 Metre + 2 Metre + 1 Metre = 12 Metre maximum (pipe + terminal).
Minimum distance D = T = 2 metre.

Exhaust terminal must not be cut.

NOTE: The pressure loss for each elbow fitted is:

90" slow bend less 3 metre of pipe for each one fitted.

135" bend less 1.5 metre of pipe for each one fitted.

NOTE:
If bends are used in the exhaust flue then horizontal sections must be avoided and there must be a 2" slope towards the boiler 35 mm fall per metre.

IMPORTANT: See Fig. 42 for terminal clearances

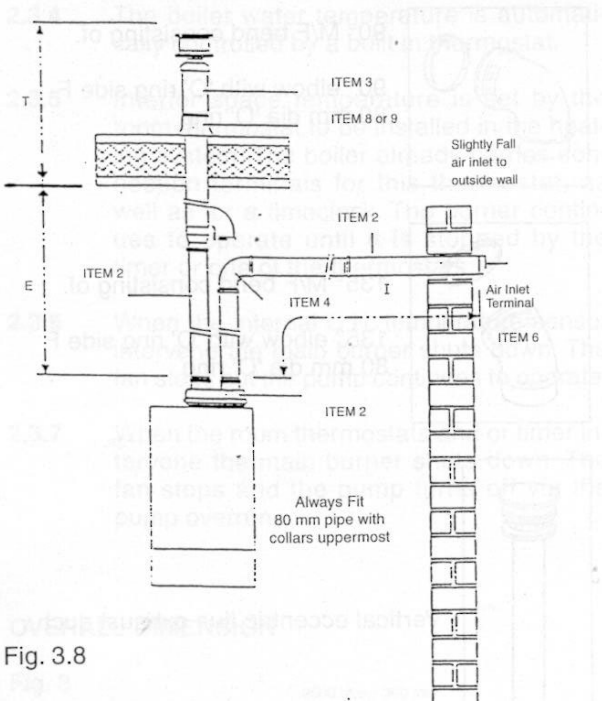

Fig. 3.8

Exhaust/suction system with two separate rated 80 dia. Pipes - exhaust on flat or sloping roof, suction from vertical wall.

Maximum distance D = I + E + T = Total exhaust/inlet pipe = 20 metre.

Exhaust terminal must not be cut.

Min inlet pipe distance = 0.5 metre.

NOTE:The pressure loss for each elbow is:

90” slow bend less 3 metre of pipe for each one fitted.

45” bend less 1.5 metre of pipe for each one fitted.

Minimum total length = 2 metre.

NOTE: Exhaust flue must slope 2” down towards the boiler 35 mm fall per metre.

IMPORTANT:
see Fig. 6 and 42 for terminal clearances

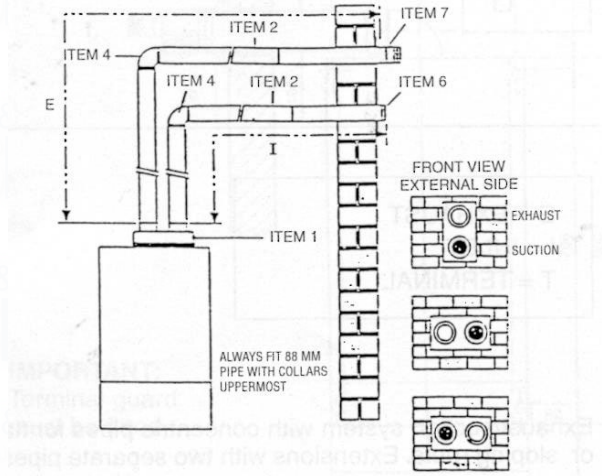

Fig. 4.8

Exhaust/suction system with two separate pipes through a single vertical wall.

Maximum distance D = I + E = Totale exhaust/inlet pipe 18 metre.

Minimum distance D = I + E = 1.5 metre.

Min inlet pipe distance 0.5 metre.

Min distance between pipe 50 mm.

NOTE: The pressure loss for each elbow fitted is:

90° slow bend less 3 metre of pipe for each one fitted.

45° bend less 1.5 metre of pipe for each one fitted.

IMPORTANT: inlet and exhaust terminals must never be installed on opposite walls of the building (PrEN 483).

ITEM	DESCRIPTION	PART NO.
1	CSI flue adaptor gasket and screws	30005
2	Straight pipe	
3	Eccentric vertical terminal	
4	90” slow bend	30001
5	45” bend	30003
6	Air inlet terminal (plastic) 80 mm	30009
7	Exhaust terminal (stainless steel) 80 mm	30011
8	Pitch roof slate	
9	Flat roof slate	
10	Twin flue pipe socket seal 60 mm	**30007**

IMPORTANT NOTICE: If the flue terminates less than 2 M. above a balcony, above the ground, or above a flat roof to which people have access, then a suitable terminal guard must be fitted.
Fit only recommended flue terminal guard by securing concentrically around terminal with screws.

Available on request from:
RAVENHEAT MANUFACTURING LTD
Chartists Way
Morley, Leeds, West Yorkshire
ENGLAND LS27 9ET - U.K.
Tel. (0113) 252 00.7

IMPORTANT:
see Fig. **6 and** 42 for terminal clearances.

EXPLODED PARTS DIAGRAM

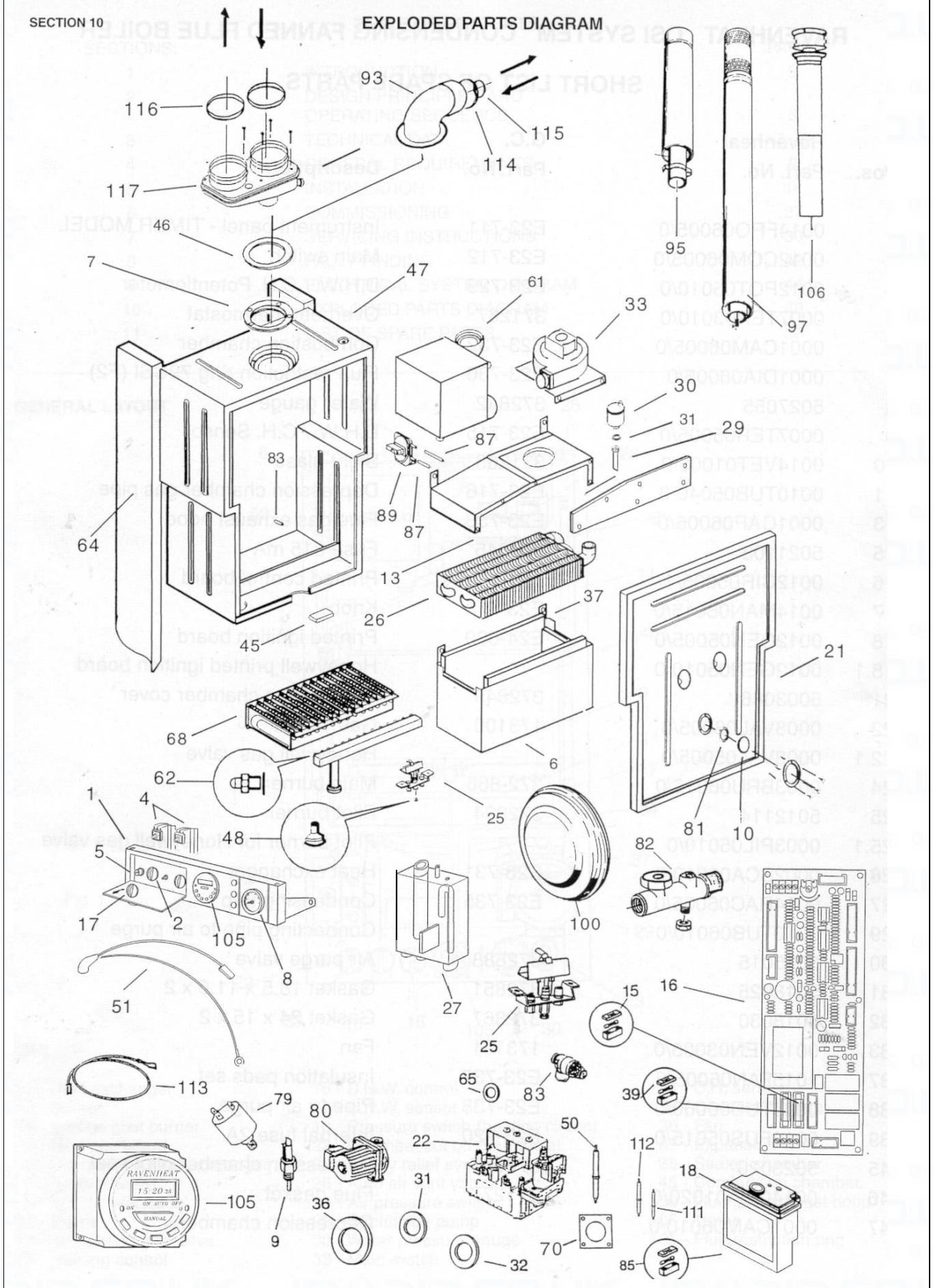

RAVENHEAT CSI SYSTEM CONDENSING FANNED FLUE BOILER

SHORT LIST OF SPARE PARTS

Pos.	Ravenheat Part. No.	G.C. Part. No.	Description
1	0014FRO06005/0	E23-711	Instrument panel - TIMER **MODEL**
2	0012COM06005/0	E23-712	Main switch
4	0012POT05010/0	E23-729	D.H.W. / C.H. Potentiometer
5	0007TER03010/0	371267	Overheat thermostat
6	0001 CAM06005/0	E23-732	Combustion chamber
7	0001 DIA06005/0	E23-730	Flue restriction ring 79CSI (F2)
8	5027055	372842	Water gauge
9	0007TER05005/0	E23-715	D.H.W. / C.H. Sensor
10	0014VET01005/0	371268	Sight glass
11	0010TUB05040/0	E23-716	Depression chamber gas pipe
13	0001CAP06005/0	E23-733	Flue gas exhaust hood
15	5021103	372845	Fuse 315 mA
16	0012CIR05005/1		Printed control board
17	0014MAN06015/0	E23-718	Knob
18	0012GEN05005/0	E24-630	Printed ignition board
18.1	0012GEN05010/0		Honeywell printed ignition board
21	5003066	372849	Combustion chamber cover
22	0008VAL03005/0	173100	Gas valve
22.1	0008VALO5005/0		Honeywell gas valve
24	0003BRU06015/0	372-866	Main burner
25	5012114	372894	Pilot burner
25.1	0003PIL05010/0		Pilot burner for Honeywell gas valve
26	0002SCA0601010	E23-731	Heat exchanger
27	0014RAC06005/0	E23-735	Condensing trap
29	001 0TUB06010/0		Connecting pipe to air purge
30	5015015	372888	Air purge valve
31	5018025	372851	Gasket 18.5 x 11.6 x 2
32	5018030	372867	Gasket 24 x 15 x 2
33	0012VEN03005/0	173101	Fan
37	1015PAN06005/0	E23-737	Insulation pads set
38	001OTUB0606010	E23-738	Pipe to air purge
39	0012FUSO5015/0	E23-726	Internal fuse 2A
45	5023020	372855	Depression chamber pilot seal
46	0014GUA01020/0	371277	Flue gasket
47	0001 CAM0601 O/O		Depression chamber

Pos.	Ravenheat Part. No.	G.C. Part. No.	Description
48	5012096	372856	Nozzle Ø 0,27 for natural gas
48.1	0003UGE01005/0	E02-129	Nozzle DM 0.22 x 1 LPG
50	5021050	372892	Ignition electrode
51	0012CAV06005/0	E23-739	Cable for electrode
61	0002SCA06005/0	E23-740	Condensing heat exchanger
62	0003UGE03005/0	371297	Nozzle Ø 1,25 for natural gas
62.1	0003UGE0I011/0	E23-755	Nozzle DM 0.75 LPG
64	0001TEL06005/0		Frame
65	5018046	372864	Seal
68	0003BRU06015/0		Main burner natural gas
68.1	0003BRU06002/0		Main burner LPG
70	0013GUA03035/0	371273	Gasket 32 x 32 x 2 gas valve
79	0005PRE03010/0	371310	Low water pressure switch
80	5009080	372896	Circulation pump
81	0013GUA01045/0	371274	Gasket 48 x 42 x 1
82	5003283	372874	Brass manifold
83	5015010	372897	Safety relief valve (3 bar)
85	0012FUS05020/0	E23-724	Internal fuse 4A
87	5021312	372875	Nylon tubes from pressure switch
89	0005PRE05015/0	E24-629	Pressure switch
93	0019CUR06005/0	E23-750	Elbow header
95	0019PR006005/0	E23-751	Flue extension duct complete
97	0019TER06005/0	E23-752	Flue duct and terminal complete
100	0004VASO6010/0		Expansion tank
105	TM61 92	371258	Digital Timer
106	0019TER06010/0	E23-753	Vertical Flue Terminal Complete
110	0001 MAN05005/0	E23-754	Bottom panel
111	0011RIV06006/0		Earth electrode
112	0011 RIV06005/0		Condensate blockage
113	0012CAV06015/0		Earth wire
114	0014GUA06010/0		Flue gasket dm 100
115	0014GUA06005/0		Flue gasket dm 60
116	0014GUA06015/0		Flue gasket dm 80
117	0019SD006005/0		Twin header

Chartists Way, Morley, Leeds, LS27 9ET.

Telephone: (0113) 252 7007

Tfax: (0113) 238 0229

Ravenheat reserves the right to make changes and improvements in our products which may affect the accuracy of the information contained in this leaflet.

Cod. 0017LIB06010/0 - 05/2001