RAVENHEAT®
MANUFACTURING LIMITED

ELECTRONIC IGNITION - AUTOMATIC MODULATING BOILER

LITTLE STAR
LS 80 - LS 80 T - LS 100 - LS 100 T

Fanned Combination Boiler

WITHOUT TIMER

LS 80 G.C. N° 4758129 (NAT.) - 4758131 (LPG)
LS 100 G.C. N° 4758133 (NAT.) - 4758135 (LPG)
NATURAL GAS (G20) -I 2H - II 2H3+
LPG (G30 - G31) - I 3+- II 2H3+

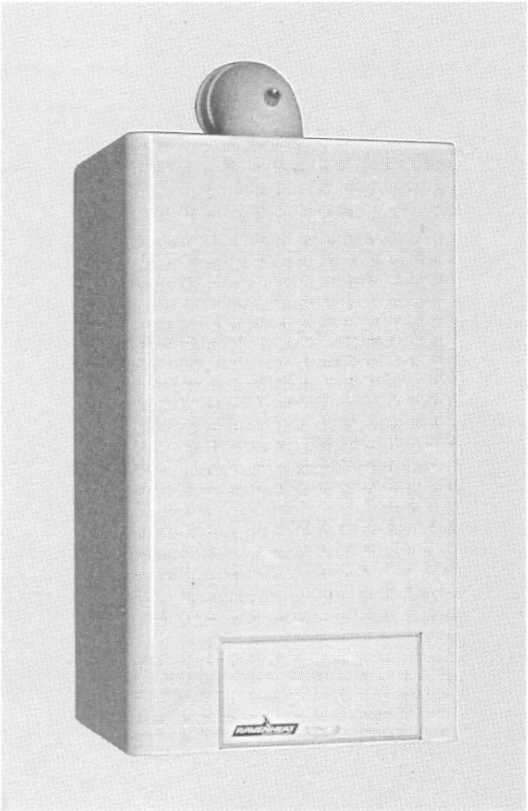

Listed by The United Kingdom Water Fitting Byelaws Scheme

CE 0087 ISO 9001

WITH TIMER

LS 80T G.C. N° 4758130 (NAT.) - 4758132 (LPG)
LS 1OOT G.C. N° 4758134 (NAT.) - 4758136 (LPG)
NATURAL GAS (G20) - I 2H - II 2H3+
LPG (G30 - G31) - I 3+- II 2H3+

INSTALLATION AND SERVICING INSTRUCTIONS TO BE LEFT WITH USER

benchmark™

The code of practice for the installation, commissioning & servicing of central heating systems

Technical and illustrative data are not binding and can be modified without prior notice. The descriptions and illustrations in the present booklet are for guideline purposes only.

RAVENHEAT MANUFACTURING LTD., CHARTISTS WAY, MORLEY, LEEDS, LS27 9ET. -TELEPHONE (0113) 252 7007

THE LITTLE STAR - AUTOMATIC MODULATING BOILER

FOR CENTRAL HEATING AND DOMESTIC HOT WATER

The new small super high efficiency turbo-modulating boiler is designed to meet domestic hot water and central heating requirements at super high efficiency, unheard of only a few years ago.

POSITION

The appliance is extremely versatile as it can be fitted in almost any room. The appliance is room sealed, there is no contact between combustion chamber and living accommodation. This guarantees maximum safety and efficiency. Indeed, our depression/combustion front cover has been designed to fit achieving maximum air tight seal which ensures maximum efficiency and safety - something which Ravenheat take great pride in.

Each boiler has been designed and manufactured in our modern plant to exacting IS0 9001 discipline, all boilers carry full CE marking of approval. Technical sales and commercial service are available throughout the UK and Europe. This product is guaranteed by Ravenheat Manufacturing, Chartists Way, Morley, LEEDS, LS27 9ET. Telephone No (0113) 252 7007.

BASIC COMPONENTS - (See figure 1)

Guarantee is a full 12 months from date of purchase providing the appliance has been fitted in accordance with these instructions and relevant codes of practice.

MAJOR COMPONENTS

- Gas valve with flame modulator.
- Variable head pump suitable for any type of central heating system.
- Main burner with flame stabiliser designed to operate under all thermal conditions.
- Primary heat exchanger constructed from copper.
- Stainless steel plate heat exchanger for super high heat transfer to domestic hot water.
- High reliability diverter valve with ethylene propylene diaphragm permitting primary flow circulation in the boiler during domestic hot water supply.
- Built in frost protection.
- Printed circuit board designed to connect to room stat and/or timer/frost stat.
- Aesthetically pleasing panels and controls.
- On/Off ball valves for shutting off gas central heating and domestic hot water circuits.
- Safety relief valve (for safety discharge).
- Programmable 7 day module with digital display (optional model).

All front panel controls not often used have been hidden behind a lift up flap. This means neat design and easy clean panels.

COSHH - CONTROL OF SUBSTANCES HARMFUL TO HEALTH

IMPORTANT

This appliance contains materials that are indicated below.
It is the Users/Installers responsibility to ensure that the necessary personal protective clothing is worn when handling, where applicable, the pertinent parts that contain any materials that could be interpreted as being injurious to health and safety.

WARNING When installing the appliance, care should be taken to avoid any possibility of injury when handling sheet metal parts.

GENERAL INFORMATION:
GLUES AND SEALANTS exercise caution - if these are still in liquid form.
INSULATION PADS, CERAMIC FIBRE may be harmful if inhaled, may be irritating to skin, eyes, nose and throat.
When handling keep dust generation to a minimum, avoid inhaling and contact with skin or eyes.
When disposing of the product keep dust generation to a minimum and ensure that parts are securely wrapped.
When servicing avoid inhalation by using a vacuum cleaner or in conjunction with other tools,
After handling wash hands and other exposed parts,
RAVENHEAT use only high quality material for production of this product, in an effort to protect the environment components should be re-cycled,

TABLE OF CONTENTS

SECTIONS:		PAGE:
	INTRODUCTION	6
2	DESIGN PRINCIPLES AND OPERATING SEQUENCE	6
3	TECHNICAL DATA	8 - 9 - 10
4	GENERAL REQUIREMENTS	11
5	INSTALLATION	16
6	COMMISSIONING	25
7	SERVICING INSTRUCTIONS	30
8	FAULT FINDING	43
9	ELECTRICAL SYSTEM DIAGRAM	45
10	EXPLODED PARTS DIAGRAM	47
11	LIST OF SPARE PARTS	48

GENERAL LAYOUT

Fig. 1

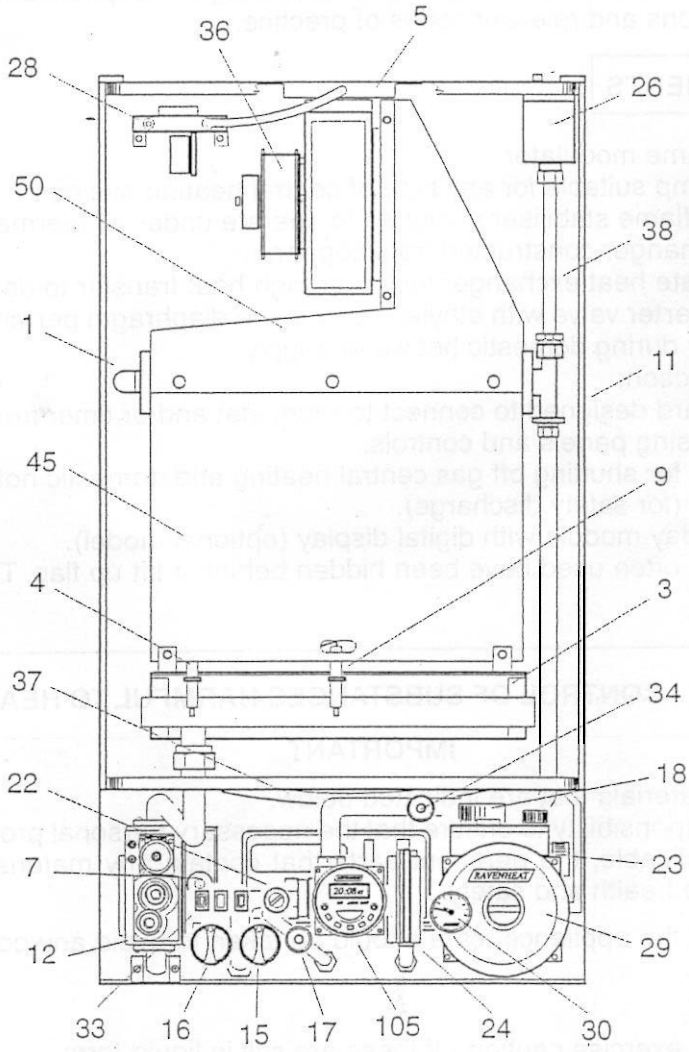

KEY

1 - Heat exchanger
3 - Burner
4 - Ignition electrode
5 - Flue restriction ring
7 - Ignition board
9 - Detection electrode
11 - Frame
12 - Modulating gas valve
15 - Heating control
16 - Hot water control
17 - D.H.W. sensor
18 - Water pressure switch (heating circuit)
22 - Overheat cut off thermostat
23 - Safety relief systems
24 - Three way valve
26 - Auto air vent valve
28 - Air pressure switch
29 - Circulation pump
30 - Water pressure gauge
33 - Main switch
34 - C.H. Sensor
36 - Fan
37 - Expansion tank
38 - Sealed chamber
45 - Combustion chamber
50 - Flue gas exhaust hood
105 - Timer

OPERATING SCHEME

Fig. 2

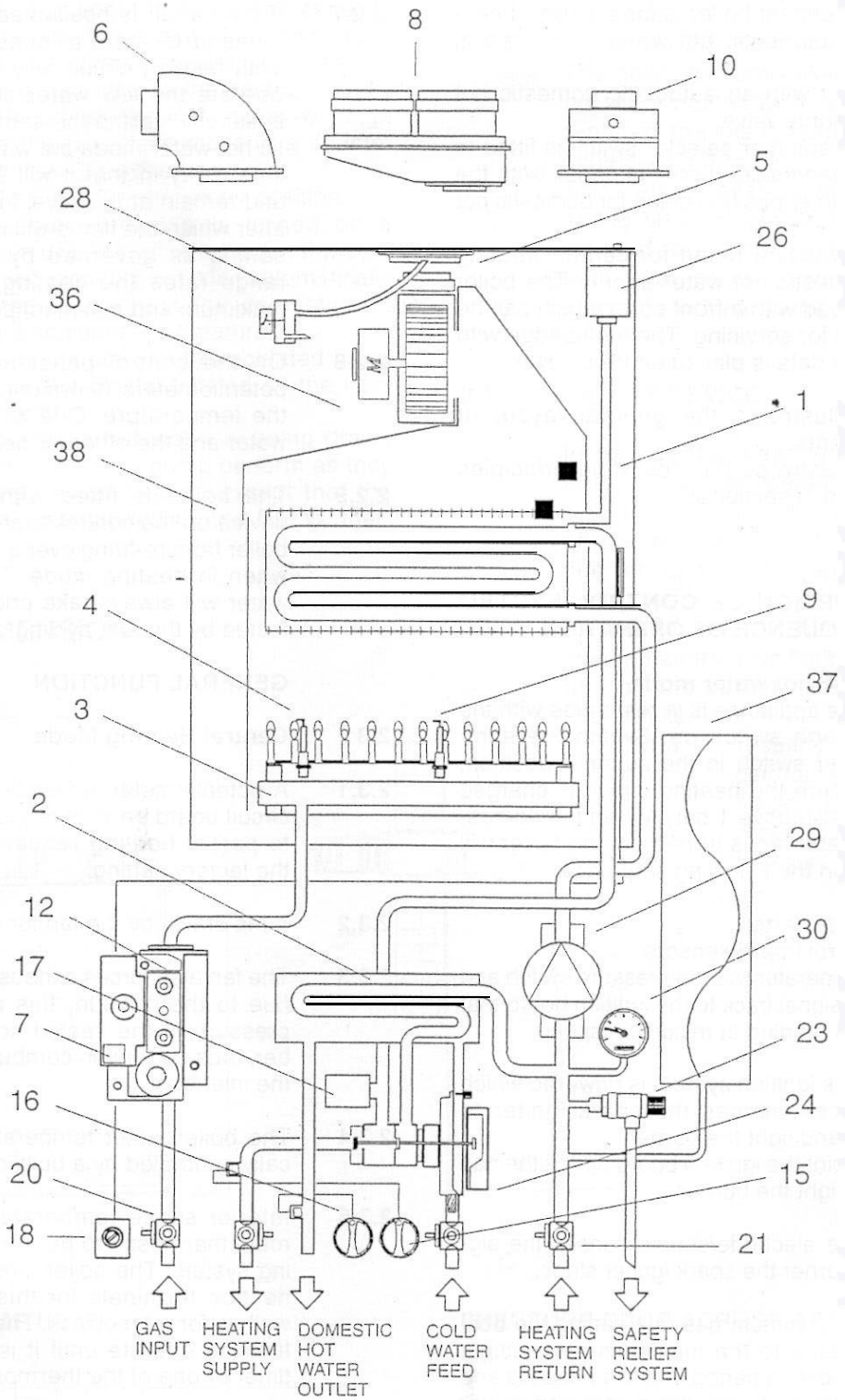

KEY

1 - Heat exchanger
2 - Heat exchanger for D.H.W. water
3 - Burner
4 - Ignition electrode
5 - Flue restriction ring
6 - Elbow header
7 - Electronic ignition
8 - Twin header
9 - Detection electrode
10 - Straight header
12 - Modulating gas valve
15 - Heating control potentiometer
16 - Hot water control potentiometer
17 - Water pressure switch
18 - Overheat cut-off thermostat
20 - Gas service cock
21 - Compression ball valves
23 - Safety relief system
24 -Three way valve
26 - Auto air vent valve
28 - Pressure switch
29 - Circulating pump
30 - Water pressure gauge
36 - Fan
37 - Expansion tank
38 - Sealed chamber

SECTION 1 INTRODUCTION

1.1 **The** Ravenheat boiler is for the use of central and domestic hot water combined in one unit.
It is fitted with an automatic domestic hot water priority valve.
A winter/summer selector switch is fitted to the left hand side of control panel. With the only summer position being for domestic hot water.
Winter position being for central heating with domestic hot water priority. The boiler is equipped with a front cover which can be removed for servicing. The data badge with technical data is placed on front cover.

1.2 Fig. 1 Illustrates the general layout of components.
Fig. 2 Illustrates the operating principles described in section 2.

SECTION 2

2.1 DESCRIPTION OF CONTROL SYSTEM AND SEQUENCE OF OPERATION

2.2 Domestic hot water mode

When the appliance is in rest mode with the mains neon switch on. Switch the summer/winter switch in the summer Position, making sure the heating circuit is charged with water (above 1 bar). When the domestic hot water tap is turned on, the boiler will function in the following sequence:

2.2.1 The pump starts.
The control board sensors.
The fan operates via the pressure switch and sends a signal back to the ignition board that the fan is running at maximum speed.

2.2.2 The spark ignition system is powered which in turn commences the spark igniter to operate and light the burner.
At this point the ignition board opens the gas valve to light the burner.

2.2.3 When the electrode/sensor senses the signal the burner the spark igniter stops.

2.2.4 From the minimum gas rate setting the boiler increases to the maximum permissible pressure over a period of 3 to 4 seconds and will remain at its maximum required power until its maximum regulated temperature.

2.2.5 When the domestic hot water tap is closed the diverter valve goes back into rest mode, the main burner is shut down. The pump and fan are also switched off, the pressure switch returning to its rest mode.

2.2.6 Central heating mode

2.2.7 If the switch is positioned on winter with a demand for heat to supply radiators, etc. With heating circuit fully charged so as to operate the low water sensor device the boiler will start in the same way as domestic hot water mode but with slightly differing time delay in that it will start on minimum and remain at this level for about 1 minute, after which the flame will lift to its maximum setting as governed by a potentiometer range rates the heating circuit between maximum and minimum power.

2.2.8 On the control panel are mounted two potentiometers (thermostats) these control the temperature. One is for domestic hot water and the other for heating.

2.2.9 The boiler is fitted with an anti-cycling device on the control board. This delays the boiler from re-firing over a 2.5 minute period when in heating mode. The domestic hot water will always take priority and is unaffected by the anti-cycling device.

GENERAL FUNCTION

2.3 Central Heating Mode

2.3.1 A potentiometer is installed on the electric circuit board permits regulation of the boiler to partial heating requirements, between the factory setting.

2.3.2 Air is drawn by the fan for combustion.

2.3.3 The fan also forces exhaust gas through the flue to the outside, this creates a lesser pressure in the sealed combustion chamber, thus sucking in combustion air, through the inlet duct.

2.3.4 The boiler water temperature is automatically controlled by a built in thermostat.

2.3.5 Interior space temperature is set by the room thermostat to be installed in the heating system. The boiler already carries connection terminals for this thermostat, as well as for a timeclock. The burner will continue to operate until it is stopped by the timer or one of the thermostats.

2.3.6 When the internal C.H. temperature sensor intervenes the main burner shuts down. The fan stops but the pump continues to operate.

2.3.7 When the room thermostats intervene the main burner shuts down. The fan stops and the pump turns off.

2.4 Domestic hot water mode,

2.4.1 The heat exchanger in the D.H.W. circuit is a stainless steel plate heat exchanger water to water, and domestic water is heated by converting the water in the central heating circuit. The transference of heat is very high because the two fluids move in a counter direction flow to each other.

2.4.2 Switch la Fig. 50 in the winter position.
When a hot water tap is turned on a diaphragm diverter valve excludes the central heating circuit, the boiler automatically modulates to maintain the domestic hot water at a constant temperature.
Water temperature can be regulated using the D.H.W. thermostat located on the front control panel.

2.4.3 When domestic hot water is being drawn the main burner and pump perform as they do during central heating except that the burner is commanded by the D.H.W. thermostat.

2.4.4 When D.H.W. is no longer called for the boiler automatically returns to the central heating mode.

2.4.5 Switch la Fig. 50 in the summer position. The boiler functions like an automatic gas hot water heater. When D.H.W. is no longer required the main burner fan and pump immediately turn off.
This also takes place when switch la Fig. 50 is on winter if there is no demand for heat to the central heating system or until the room thermostat/time clock demands for heat to the central heating circuit.

3.1 SAFETY DEVICE

In both central heating and domestic hot water mode safe operating is ensured by:
- A differential pressure switch which shuts off the main burner if the fan stops or the flue or combustion air intake duct is obstructed.

3.1.2 An overheat cut off thermostat set slightly higher than the high limit thermostat acts to turn off the burner to resetable "lockout" (Fig. 50) item 3.

3.1.3 A safety valve fitted on the central heating circuit set at 43 psi (3 bar).
A heating circuit (low water) pressure switch is set at 0.4 bar.

OVERALL DIMENSION

Fig. 3

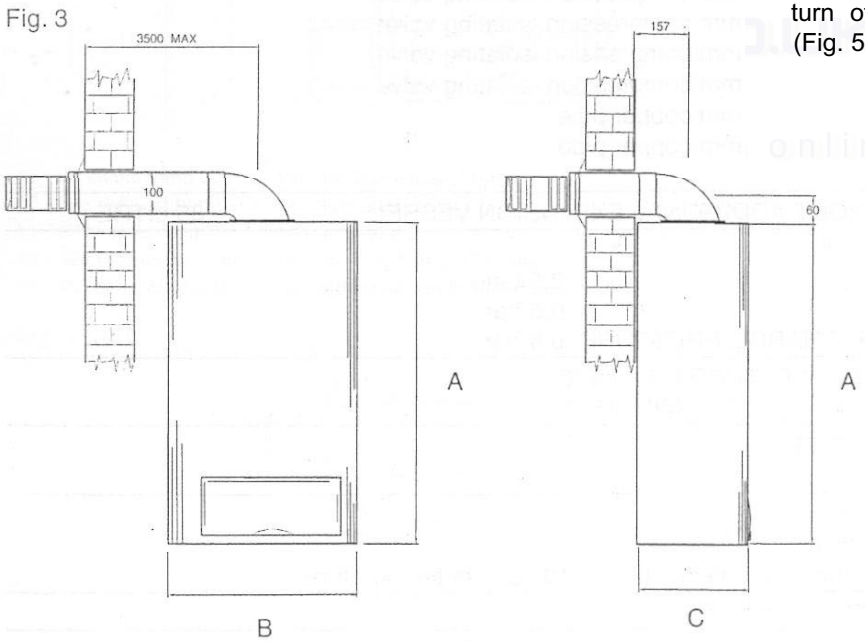

	A	B	C
LS 80 (T)	700	400	300
LS 100 (T)	700	450	300

AVAILABLE PUMP HEAD

Fig. 4

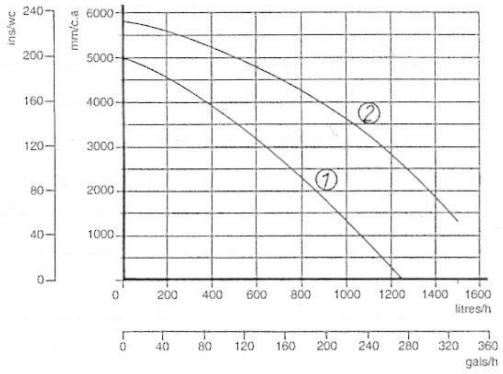

PRESSURE DROP ACROSS APPLIANCE

Fig. 5

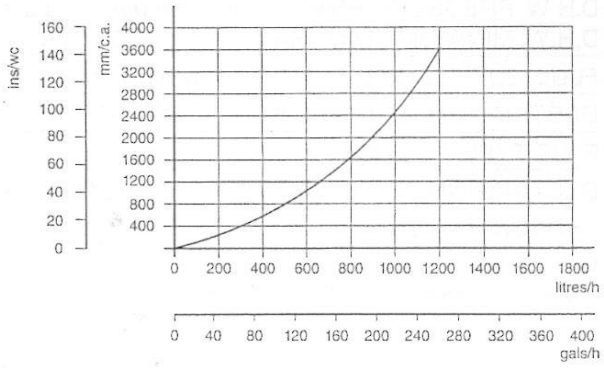

TABLE 1

NATURAL GAS (G 20) I 2H

NOMINAL HEAT INPUT NET QMS		26.1 kW
MINIMUM HEAT INPUT NET		13.5 kW
NOMINAL HEAT OUTPUT		24.1 kW
MINIMUM HEAT OUTPUT		11.6 kW
GAS RATE	max	2.6 m^3/h
AFTER 10 MINUTES	min	1.3 m^3/h
INLET PRESSURE	20 mbar	
BURNER PRESSURE C.H.	max	8.1 mbar
	min	1.5 mbar
MAIN BURNER INJECTORS	Nr. 13 x 1.35	
ELECTRICAL SUPPLY	230 V - 50 HZ	
POWER CONSUMPTION	150w	
EXTERNAL FUSE RATING	3 A	
INTERNAL FUSE	250 mA 2 A	(20 mm to BS 4265)
DRY WEIGHT	39.3 kg	
WATER CONTENT C.H.	1.5 litre	
WATER CONTENT	0.5 litre	
GAS SUPPLY CONNECTION	15 mm compression isolating valve	
FLOW CONNECTION C.H.	22 mm compression isolating valve	
RETURN CONNECTION C.H.	22 mm compression isolating valve	
INLET CONNECTION D.H.W.	15 mm compression isolating valve	
OUTLET CONNECTION D.H.W.	15 mm copper pipe	
SAFETY DISCHARGE C.H.	15 mm copper pipe	
MAX COLD WATER CAPACITY WITHOUT ADDITIONAL EXPANSION VESSEL		85 LITRE
SEALED WATER SYSTEM C.H.		
MAX PRESSURE PHS		2.5 bar
MINIMUM WORKING PRESSURE		0.5 bar
6 LITRES EXPANSION VESSEL PRE-CHARGE-PRESSURE		0.5 bar
CENTRAL HEATING OPERATING TEMPERATURE	MAX 85 °C **MIN 45 °C**	
DESIGN FLOW RATE 1033 l/h 20 °C RISE		
MINIMUM FLOW RATE C.H. 650 l/h		
D.H.W. FLOW RATE 30 °C rise 11.5 l/min		
D.H.W. FLOW RATE 35 °C rise 9.9 l/min		
D.H.W. FLOW RATE 40 °C rise	8.6 l/min (2.0 gals/min)	10 °C inlet temperature
D.H.W.TEMPERATURE	max 65°C min 35°C	
BURNER PRESSURE D.H.W.	max 8.1 mbar	min 1.5 mbar
QMW Input Net	max 26.1 kW	min 13.5 kW
D.H.W. PRESSURE	max 10 bar (147 p.s.i.)	
D.H.W. PRESSURE PMW	min 0.8 bar (11.8 p.s.i.)	
D.H.W. MINIMUM FLOW RATE	3 l/min (0.66 gals/min)	
FLUE OUTLET NOM. DIAMETER 100 mm specially supplied with boilers		
DESTINATION: AT. CH. DK. ES. FI. GB. IE. IT. PT. SE.		
FLUE TYPE - C 12 C 32 C 52		
CATEGORY I2H		NOX 2
SEDBUK RATING	79.61 %	BAND D
C 12 C 32 = ORIFICE PLATE DM 77		
C 52 = ORIFICE PLATE DM 75		

TABLE 1/A

LPG (G 30 - G 31) I 3+

NOMINAL HEAT INPUT NET QMS			26.1 kW		
MINIMUM HEAT INPUT NET			13.5 kW		
NOMINAL HEAT OUTPUT			24.1 kW		
MINIMUM HEAT OUTPUT			11.6 kW		
GAS RATE max G 31	0.95 m^3/h			G 30	0.79 m^3/h
AFTER 10 MINUTES min	0.5 m^3/h				0.4 m^3/h
INLET PRESSURE 37 mbar G 31			28 - 30 mbar	G 30	
BURNER max	G 31	35.4 mbar		G 30	27.3 mbar
PRESSURE min		9.6 mbar			6.6 mbar
MAIN BURNER INJECTORS Nr. 13 x 0.75					
ELECTRICAL SUPPLY 230 V - 50 HZ					
POWER CONSUMPTION	150 W				
EXTERNAL FUSE RATING	3A				
INTERNAL FUSE	250 mA - 2 A		(20 mm to BS 4265)		
DRY WEIGHT	39.3 kg				
WATER CONTENT C.H.	1.5 litre				
WATER CONTENT OHW	0.5 litre				
GAS SUPPLY CONNECTION		15 mm compression isolating valve			
FLOW CONNECTION C.H.		22 mm compression isolating valve			
RETURN CONNECTION C.H.		22 mm compression isolating valve			
INLET CONNECTION D.H.W.		15 mm compression isolating valve			
OUTLET CONNECTION D.H.W.		15 mm copper pipe			
SAFETY DISCHARGE C.H.		15 mm copper pipe			
MAX COLD WATER CAPACITY WITHOUT ADDITIONAL EXPANSION VESSEL					85 LITRES
SEALED WATER SYSTEM C.H.					
MAX PRESSURE PMS			2.5 bar		
MINIMUM WORKING PRESSURE			0.5 bar		
6 LITRES EXPANSION VESSEL PRE-CHARGE-PRESSURE			0.5 bar		
CENTRAL HEATING OPERATING TEMPERATURE MAX 85 °C					
MIN 45 °C					
DESIGN FLOW RATE DHW 1033 l/h 20 °C RISE					
MINIMUM FLOW RATE C.H./650 Lts/h (111 gals/h)					
D.H.W. FLOW RATE 30 °C rise D 11.5 l/min					
D.H.W. FLOW RATE 35 °C rise	9.9 l/min				
D.H.W. FLOW RATE 40 °C rise	8.6 l/min		10 °C inlet temperature		
D.H.W.TEMPERATURE	max 65 °C				
	min 35 °C				
BURNER PRESSURE D.H.W.	max 8.1 mbar		min 1.5 mbar		
QMW Input Net	max 26.1 kW		min 13.5 kW		
D.H.W. PRESSURE	max 10 bar				
D.H.W. PRESSURE PMW	min 0.8 bar				
D.H.W. MINIMUM FLOW RATE3 l/min					
FLUE OUTLET NOM. DIAMETER 100 mm specially supplied with boilers					
DESTINATION: BE. CH. ES. FR. GB. IE. IT. PT.					
FLUE TYPE C12 - C32 - C52					
CATEGORY I 3+			NOX 2		
SEDBUK RATING	81.88 %	BAND D			
C12 C32 ORIFICE PLATE DM 76					
C52 = ORIFICE PLATE DM 74					

TABLE 3

LS 100 (T)

NATURAL GAS (G 20) I 2H - II 2H3+

NOMINAL HEAT INPUT NET QMS		31.4 kW	
MINIMUM HEAT INPUT NET		13.0 kW	
NOMINAL HEAT OUTPUT		29.0 kW	
MINIMUM HEAT OUTPUT		11.2 kW	
GAS RATE	max	3.2 m^3/h	
AFTER 10 MINUTES	min	1.25 m^3/h	
INLET PRESSURE	20 mbar		
BURNER PRESSURE C.H.	max	12.5 mbar	
	min	1.4 mbar	
MAIN BURNER INJECTORS	Nr. 15 x 1.25		
ELECTRICAL SUPPLY	230V-50HZ		
POWER CONSUMPTION	150w		
EXTERNAL FUSE RATING	3A		
INTERNAL FUSE	250 mA 2 A	(20 mm to BS 4265)	
DRY WEIGHT	41 .a kg		
WATER CONTENT C.H.	1.7 litre		
WATER CONTENT	0.5 litre		
GAS SUPPLY CONNECTION	15 mm compression isolating valve		
FLOW CONNECTION C.H.	22 mm compression isolating valve		
RETURN CONNECTION C.H.	22 mm compression isolating valve		
INLET CONNECTION D.H.W.	15 mm compression isolating valve		
OUTLET CONNECTION D.H.W.	15 mm copper pipe		
SAFETY DISCHARGE C.H.	15 mm copper pipe		
			85 LITRE
MAX COLD WATER CAPACITY WITHOUT ADDITIONAL EXPANSION VESSEL			
SEALED WATER SYSTEM C.H.			
MAX PRESSURE PHS		2.5 bar	
MINIMUM WORKING PRESSURE		0.5 bar	
6 LITRES EXPANSION VESSEL PRE-CHARGE-PRESSURE		0.5 bar	
CENTRAL HEATING OPERATING TEMPERATURE		MAX 85 °C	MIN 45 °C
DESIGN FLOW RATE D.H.W. 1247 l/h 20°C			
MINIMUM FLOW RATE C.H. 650 l/h			
D.H.W. FLOW RATE 30 °C rise	13.9 l/min		
D.H.W. FLOW RATE 35 °C rise	11.9 l/min		
D.H.W. FLOW RATE 40 °C rise	10.4 l/min (2.0 gals/min)	10 °C inlet temperature	
D.H.W.TEMPERATURE	max 65 °C min 35 °C		
BURNER PRESSURE D.H.W.	max 12.5 mbar	min 1.4 mbar	
QMW Input Net	max 31.4 kW	min 13.0 kW	
D.H.W. PRESSURE	max 10 bar (147 p.s.i.)		
D.H.W. PRESSURE PMW	min 0.8 bar (11.8 p.s.i.)		
D.H.W. MINIMUM FLOW RATE	3 l/min		
FLUE OUTLET NOM. DIAMETER 100 mm specially supplied with boilers			
DESTINATION: AT. DK. FI. SE.	CATEGORY I 2H		
DESTINATION: GB. IE. CH. ES. IT. PT	CATEGORY II 2H3+		
FLUE TYPE - C12 - C32 - C52			
SEDBUK RATING	79.61 %	BAND D	NOX4
C12 C32 ORIFICE PLATE DM 79			
c52 = ORIFICE PLATE DM 78			

TABLE 4

LS 100 (T)

LPG (G 30 - G 31) II 2H3+ -I 3+

NOMINAL HEAT INPUT NET QMS			31.4 kW		
MINIMUM HEAT INPUT NET			13.0 kW		
NOMINAL HEAT OUTPUT			29.0 kW		
GAS RATE	max	G 31	1.24 m^3/h	G 30	0.95 m^3/h
After 10 minutes	min		0.53 m^3/h		0.40 m^3/h
INLET PRESSURE	37 mbar	G 31	28 30 mbar	G 30	
BURNER PRESSURE C.H.	max	G 31	35.4 mbar	G 30	27.2 mbar
	min		6.1 mbar		4.7 mbar
MAIN BURNER INJECTORS Nr. 15 x 0.75					
ELECTRICAL SUPPLY	230V-50HZ				
POWER CONSUMPTION	150w				
EXTERNAL FUSE RATING	3A				
INTERNAL FUSE	250 mA - 2 A		(20 mm to BS 4265)		
DRY WEIGHT	41.8 kg				
WATER CONTENT C.H.	1 .7 litre				
WATER CONTENT OHW	0.5 litre				
GAS SUPPLY CONNECTION	15 mm compression isolating valve				
FLOW CONNECTION C.H.	22 mm compression isolating valve				
RETURN CONNECTION C.H.	22 mm compression isolating valve				
INLET CONNECTION D.H.W.	15 mm compression isolating valve				
OUTLET CONNECTION D.H.W.	15 mm copper pipe				
SAFETY DISCHARGE C.H.	15 mm copper pipe				
MAX COLD WATER CAPACITY WITHOUT ADDITIONAL EXPANSION VESSEL					85 LITRES
SEALED WATER SYSTEM C.H.					
MAX PRESSURE PMS			2.5 bar		
MINIMUM WORKING PRESSURE			0.5 bar		
6 LITRES EXPANSION VESSEL PRE-CHARGE-PRESSURE			0.5 bar		
CENTRAL HEATING OPERATING TEMPERATURE			MAX 85 °C	MIN 45°C	
DESIGN FLOW RATE DHW 1247 l/h 20 °C RISE					
MINIMUM FLOW RATE C.H. 650 L/h					
D.H.W. FLOW RATE 30 °C rise	13.9 l/min				
D.H.W. FLOW RATE 35 °C rise	11.9 l/min				
D.H.W. FLOW RATE 40 °C rise	10.4 l/min	10 °C inlet temperature			
D.H.W. TEMPERATURE	max 65 °C	min 35°C			
BURNER PRESSURE D.H.W.	max	G 31	35.4 mbar	G 31	27.2 mbar
	mln		6.1 mbar		4.7 mbar
QMW Input Net	max 31.4 kW		min 13.0 kW		
D.H.W. PRESSURE	max 10 bar (147 p.s.i.)				
D.H.W. PRESSURE PMW	min 0.8 bar (11.8 p.s.i)				
D.H.W. MINIMUM FLOW RATE	3 l/min				
FLUE OUTLET NOM. DIAMETER 100 mm specially supplied with boilers					
DESTINATION: GB. IE. CH. ES. IT. PT.	CATEGORY II 2H3+				
DESTINATION: BE. FR.	CATEGORY I 3+				
FLUE TYPE C12 C32 C52					
SEDBUK RATING	81.88 %	BAND D	NOX 4		
C12 - C32 = ORIFICE PLATE DM 78					
c52 = ORIFICE PLATE DM 77					

SECTION 4 GENERAL REQUIREMENTS

4.0 SAFETY

Gas Safety (Installation and Use) **Regulations, 1994 and amended 2000.**
It is law that all gas appliances are installed and serviced by a CORGI registered installer in accordance with the above regulations and these installation instructions. All CORGI registered installers carry a CORGI I.D. card and have a registration number. Both should be recorded in your boiler log book. You can check your installer by calling CORGI direct on: 01256 732300. Failure to install appliances correctly could lead to prosecution. It is in your own interest, and that of safety, to ensure the law is complied with. Check the boiler and flue is the correct type for Installation.
The installation of the boiler MUST be in accordance with the latest I.E.E. (BS 7671) Wiring Regulations, local building regulations, bye-laws of the local water authority, the building regulations and the Building Standards (Scotland) and any relevant requirements of the local authority.

4.1 GENERAL INFORMATION

Both the user and the manufacturer rely heavily on the installer, whose job it is to install the combination boiler and connect it to a correctly designed heating system. Acquaint yourself with the British Standards concerning installation requirements. If you need advice on any points your Ravenheat Technical Services Office would be pleased to help. It is recommended that tools suitable for brass fittings are used, and have a capability to accomodate hexagon sizes up to 50 mms.

CODES OF PRACTICE/Ref: Documents

Detailed recommendations are contained in the following British Standard Codes of Practice:

BS. 6891	Low pressure installation pipes.
BS. 6798	Installation of gas fired hot water boilers of rated input not exceeding 60 kW.
BS. 5449	Forced circulation hot water systems.
BS. 5546	Installation of gas hot water supplies domestic purposes (2nd Family Gases).
BS. 5440:1	Flues (for gas appliances of rated input not exceeding 60 kW).
BS. 5440:2	Ventilation (for gas appliances of rated input not exceeding 60 kW).
DD 189:1990	Discharge of condensate

Health & Safety Document No. 635

The Electricity at Work Regulations, 1989.

The manufacturer's notes must NOT be taken, in any way, as overriding statutory obligations.

IMPORTANT.These appliances are CE certificated for safety and performance. It is, therefore, important that no external control devices e.g. flue dampers, economisers etc., are directly connected to this appliance unless covered by these Installation and Service Instructions or as otherwise recommended by Ravenheat in writing. If in doubt please enquire.

Any direct connection of a control device not approved by Ravenheat could invalidate the certification and the normal appliance warranty. It could also infringe the Gas Safety regulations and the above regulations.

NOTE: The Ravenheat LITTLE STAR combination boiler has been tested and examined by Advantica Technologies Ltd, and is certified to comply with PrEN 483 and BS EN 625.
Manufacturers instructions must NOT be taken in any way as overriding statutory obligations.
If in doubt on any point please consult Ravenheat Manufacturing Ltd.

4.2 LOCATION OF BOILER

4.2.1 Siting of Ravenheat Little Star Combi Boiler must be as follows. The position of installation should be within the building, unless otherwise protected by a suitable enclosure. Adequate space for installation, servicing and air circulation around boiler must be allowed for.
The Ravenheat LS 80 (T) and LS 100 (T) Combi Boiler must be fitted on a flat and vertical wall capable of adequately supporting the weight of the boiler and any ancillary equipment.
The appliance may be installed on a combustible wall subject to the requirements of the Local Authority and Building Regulations.

LPG versions of this appliance shall not be installed in cellars or basements.

4.3 CLEARANCES AROUNDTHE APPLIANCE

4.3.1

LS 80 (T) - LS 100 (T)
Above 125 mm Below 100 mm Front 450 mm Side 5 mm
5 mm in front when installed in a cupboard

4.4 IMPORTANT NOTICE

4.4.1 If the combination boiler iS to be fitted in a timber framed building it should be fitted in accordance with the British Gas Publication Guide for Gas Installations in Timber Frame Housing Reference DM2. If in doubt advice must be sought from the local gas supplier.
The combination boiler may be installed in any room or internal space, although particular attention is drawn to the requirements of the current I.E.E. Wiring Regulations, and in Scotland the electrical provisions of the Building Regulations applicable in Scotland, with respect to the installation of the combination boiler in a room or internal space containing a bath or shower.
Where a room sealed appliance is installed in a room containing a bath or shower, any electrical switch or appliance control, utilising mains electricity should be so situated that it cannot be touched by a person using a bath or shower.
A compartment used to enclose the combination boiler MUST be designed and constructed specifically for this purpose. An existing cupboard, or compartment, may be used provided it is modified accordingly.
Samples of the LITTLE STAR combination boiler have been examined by Advantica Technologies Ltd, and is certified to comply with the essential requirements of the Gas Appliance Directive 90/396/EEC, the Low Voltage Directive 72/23/EEC and shows compliance with the Electro Magnetic Compatibility Directive 89/336/EEC and are therefore permitted to carry the CE Mark.

The appliance has been tested and approved by the WRc as meeting the requirements of G3 and L of the Building regulations and water Bylaws Scheme -Approved Products.

4.5 GAS SUPPLY

4.5.1 A gas meter is connected to the service pipe by the Local Gas Region or the Local Gas Region contractor. An existing meter should be checked preferably by the Gas Region to ensure that the meter is adequate to deal with the rate of gas supply required for all appliances it serves. Installation pipes should be fitted in accordance with BS 6891. Pipework from the meter to the boiler must be of adequate size (22 mm) min. To within at least 3 metre of the boiler (15 mm) min. can then be used for remaining pipe work to the appliance. A smaller size than the boiler inlet gas connection should not be used. The complete installation must be tested for soundness as described in the above Code.
N.B. if the gas supply for the boiler serves other appliances ensure an adequate supply is available both to the boiler and the other appliances when they are in use at the same time.

4.6 FLUE SYSTEM

4.6.1 The terminal should be located where dispersal of combustion products is not impeded and with due regard for the damage or discolouration that might occur to building products in the vicinity (see fig. 6).
The terminal must not be located in a place where it is likely to cause a nuisance.
In cold and/or humid weather water vapour may condense on leaving the flue terminal. The effect of such steaming must be considered.
The terminal must not be closer than 25 mm. (1 in) to any combustible material. For protection of combustibles. refer to BS 5440.1.
Where a flue terminal is installed less than 1000 mm. from a plastic, or painted gutter; or 500 mm from painted eaves, an aluminium shield 1000 mm. long, should be fitted to the underside of the gutter or painted surface.

IMPORTANT: The following notes are intended for general guidance.

The boiler MUST be Installed so that the terminal is exposed to external air.

It is important that the position of the terminal allows the free passage of air across it at all times.

Minimum acceptable spacing from the terminal to obstructions and ventilation opening are specified in Fig. 6.

Note positions: *Due to the terminal design, installation is possible with clearances less than those specified in BS 5440, Part 1.*

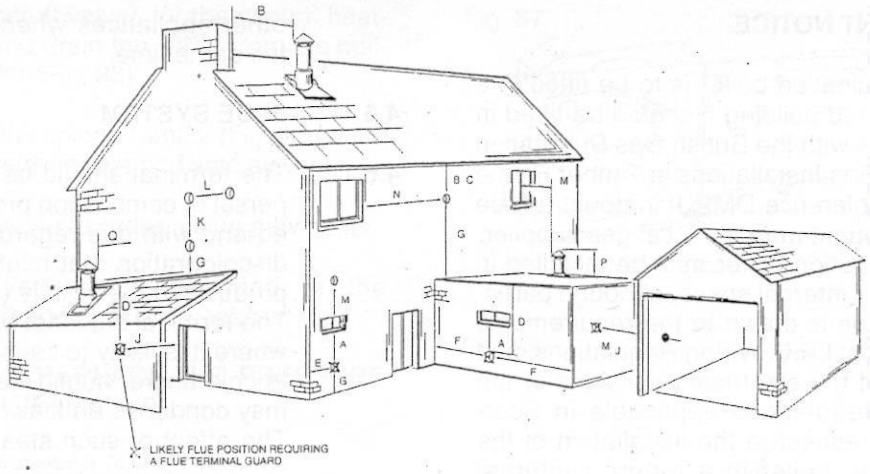

Fig. 6

Terminal position for fan assisted boiler

(minimum distance)		mm
A	- Directly below an open window or other opening (e.g. air brick)	300
B	- Below gutters, soil pipes or drain pipes	25
C	- Below eaves	25
D	- Below balconies or car port roof	25
E	- From vertical drain pipes and soil pipes	25
F	- From internal or external corners	25
G	- Above ground or below balcony level	300
H	- From a surface facing a terminal	600
I	- From a terminal facing a terminal	1200
J	- From an opening in the car port (e.g. door window) into dwelling.	1200
K	- Vertically from a terminal on the same wall	1500
L	- Horizontally from a terminal on the same wall	300

NOTE: The flue must be terminated in a place not likely to cause a nuisance.

4.6.2 A concentric vertical flue kit is available for flueing applications up to a maximum height of 4 metres.
For further details see vertical flue installation instructions.

4.7 AIR **SUPPLY**

4.7.1 The following notes are intended for general guidance.
The room sealed fan flued boiler does not require a permanent air vent for combustion air supply.
Where installed in a cupboard or compartment ventilation is not required.

4.8 **WATER CIRCULATION (central heating)**

4.8.1 Detailed recommendations are given in BS 6798:1987/5449:1990 (for. smallbore and microbore central heating systems). The following notes are given for general guidance.

4.8.2 **Pipework**
Copper tubing to BS 2871 1.1.1971 is recommended for water pipes. Jointing should be either with capillary soldered or with compression fittings.
Where possible pipes should have a gradient to ensure air is carried naturally to air release points and water flows naturally 16 drain taps. It should be ensured as far as possible that the appliance heat exchanger is not a natural collecting point for air except where providing useful heat, pipes should be insulated to prevent heat loss and to avoid freezing. Particular attention should be paid to pipes passing through ventilated spaces in roofs and under floors.

4.8.3 The water through the appliance heat exchanger circuit must exceed the min. 2.38 gals/min. (650 lt/h) when the burner is firing. It is important to ensure that this rate is achieved when sections of the system are shut off either manually or by automatic controls. **Therefore a by-pass must be fitted to the system (15 mm min.) (Fig. 6A).**
If the volume of circulating water is too low, the boiler water temperature will rise too rapidly. This could cause noise in the system or even cause the safety thermostat to trip.

Fig. 6A

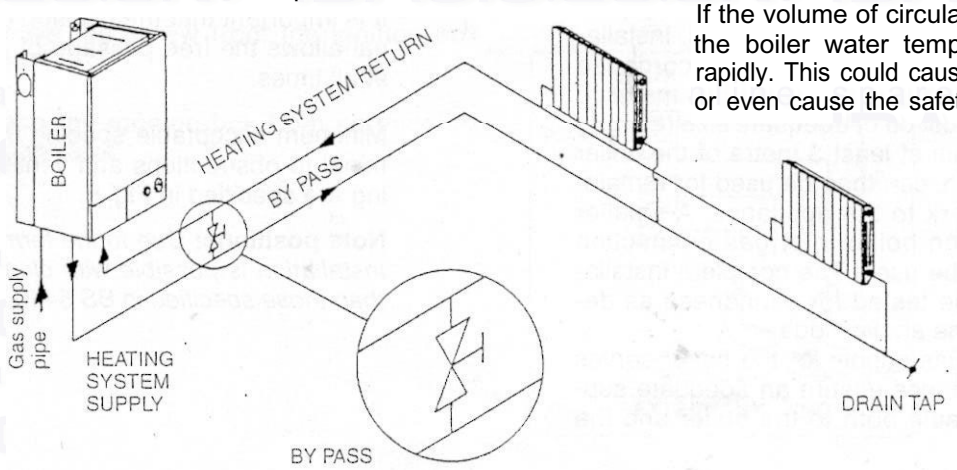

4.8.4 **Draining tap**

These must be located in. accessible positions to permit the draining of the whole system. The taps must be at least 15 mm nominal size and manufactured in accordance with BS 2870 1980

4.8.5 **Air release points**

These must be fitted at all high points where air will naturally collect, and must be sited to facilitate complete fitting of the system.

4.8.6 The appliance has an integral sealed expansion vessel to accommodate the increase of water volume when the system is heated. It can accept up to 6 lts of expansion water. If the appliance is connetted to a system with an unusually high water content, calculate the total expansion and add additional sealed expansion capacity as appropriate (Fig. 7).

In general modern systems will present no problem.

Fig. 7

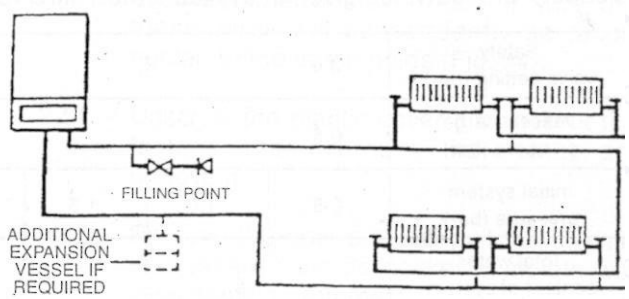

4.8.7 **Mains water feed: central heating**

There must be no direct connection to the mains water supply, even through a non-return valve, without the approval of the Local Water Authority.

4.8.8 **Permissible methods of dilling**

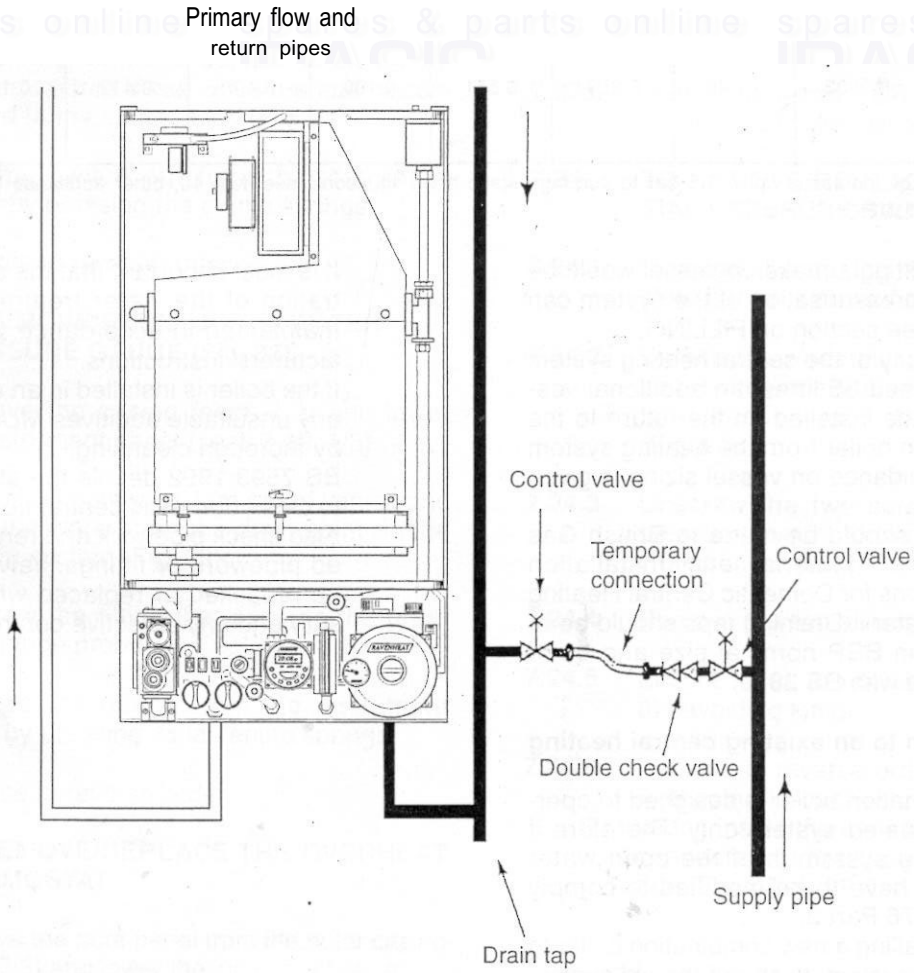

Figure 1 depicts the requirements of Diagram R24.2a of he Water Supply (Water Fittings) Regulations 1999.

SIZING OF ADDITIONAL EXPANSION VESSELS: TABLE 3

Deduct from the value given in the table the 7 litre vessel supplied.

Safety valve setting (bar)	3.0								
Vessel charge pressure (bar)	0.5				1.0			1.5	
Initial system pressure (bar)	0.5	1.0	1.5	2.0	1.0	1.5	2.0	1.5	2.0
Total water content of system	EXPANSION VESSEL VOLUME (LITRES)								
Litres									
25	2.1	3.5	6.5	13.7	2.7	4.7	10.3	3.9	8.3
50	4.2	7.0	12.9	27.5	5.4	9.5	20.6	7.8	16.5
75	6.3	10.5	19.4	41.3	8.2	14.2	30.9	11.7	24.8
100	8.3	14.0	25.9	55.1	10.9	19.0	41.2	15.6	33.1
125	10.4	17.5	32.4	68.9	13.6	23.7	51.5	19.5	41.3
150	12.5	21.0	38.8	82.6	16.3	28.5	61.8	23.4	49.6
175	14.6	24.5	45.3	96.4	19.1	33.2	72.1	27.3	57.9
200	16.7	28.0	51.8	110.2	21.8	38.0	82.4	31.2	66.2
225	18.7	31.5	58.3	124.0	24.5	42.7	92.7	35.1	74.5
250	20.8	35.0	64.7	137.7	27.2	47.5	103.0	39.0	82.7
275	22.9	38.5	71.2	151.5	30.0	52.2	113.3	42.9	91.0
300	25.0	42.0	77.7	165.3	32.7	57.0	123.6	46.8	99.3
325	27.0	45.5	84.1	179.1	35.7	61.7	133.9	50.7	107.6
350	29.1	49.0	90.6	192.8	38.1	66.5	144.2	54.6	115.8
375	31.2	52.5	97.1	206.6	40.9	71.2	154.5	58.5	124.1
400	33.3	56.0	103.6	220.4	43.6	76.0	164.8	62.4	132.4
425	35.4	59.5	110.1	239.2	46.3	80.7	175.1	66.3	140.7
450	37.5	63.0	116.5	247.9	49.0	85.5	185.4	70.2	148.9
475	39.6	66.5	123.0	261.7	51.8	90.2	195.7	74.1	157.2
500	41.6	70.0	125.9	275.5	54.5	95.0	206.0	78.0	165.5
For system volumes other than those given above, multiply the system volume by the factor across	0.0833	0.140	0.259	0.551	0.109	0.190	0.412	0.156	0.331

Note: This pressure can be increased up to 1.5 bar to suit static head situations, see item 10, other appliance instructions in the SERVICING INSTRUCTIONS

B) Where fitting a make up vessel would be difficult re - pressurisation of the system can be done. See section on FILLING.

If the capacity of the central heating system should exceed 85 litres, an additional vessel should be installed on the return to the combination boiler from the heating system (Fig. 7). Guidance on vessel sizing is given in (Table 3).

Reference should be made to British Gas Publications <<Material and Installation Specifications for Domestic Central Heating and Hot Water >>. Draining taps should be at least 1/2" in BSP nominal size and be in accordance with BS 2879.

4.8.9 **Installation to an existing central heating system**

The combination boiler is designed to operate on a sealed system only. Therefore if the existing system is of the open water type it will have to be modified to comply with BS 5376 Part 2.

Before, installing a new combination boiler to an existing system, flush out the old system with a recommended descaling agent.

It is most important that the correct concentration of the water treatment product is maintained in accordance with the manufacturers' instructions.

If the boiler is installed in an existing system any unsuitable additives MUST be removed by thorough cleansing.

BS 7593:1992 details the steps necessary to clean domestic central heating system.

Also check pipework and renew any corroded pipework or fittings. Valve glands must be repacked or replaced wherever necessary and any defective controls exchanged.

4.8.10 Hard water areas

If the. area of installation is recognised as hard water, it is recommended that a suitable water treatment device is installed in the mains.
The water hardness can be determined by using the standard test paper or by referring Local water authority.

4.9 DOMESTIC WATER

4.9.1 The domestic hot water must be in accordance with the relevant recommendations of BS 5546. Copper tubing to BS 2871. 1 is recommended for water carrying pipework and MUST be used for pipework carrying potable water.

4.10 ELECTRICAL SUPPLY

Warning: this appliance must be earthed

4.10.1 External wiring to the appliance must be carried out by a competent person and be in accordance with the current I.E.E. Regulations and local regulations which apply.
The Ravenheat boiler is supplied for connection to a 230 V - 50 Hz single phase supply. **The supply must be fused at 3 A.**

NOTE: The method of connection to the electricity supply MUST facilitate complete electrical isolation of the appliance, by the use of a fused, double pole isolator, having a contact separation of at least 3 mm in all poles. The point of connection to the electricity supply must be readily accessible and adjacent to the appliance except, where the appliance is installed in a bathroom, this MUST be sited outside the bathroom.

SECTION 5 INSTALLATION

5.1 WARNING

5.1 .1 It is MOST IMPORTANT that this appliance is installed in a VERTICAL POSITION, with the flue air duct passing through the wall in a HORIZONTAL PLANE. A minor deviation from the horizontal is acceptable, provided that this results in a downward slope of the flue/air duct away from the combination boiler.

5.2 DELIVERY

5.2.1 **The appliance will arrive on site in two cartons:**

Boiler carton containing:
a) boiler fully assembled
b) installation instructions and user instructions
c) white paper template
d) terminal cover plate (Fig. 12)
g) - 4 coach bolts and wall plugs
- screws and dowels

Valve pack (poly bag):
a) 2-22 mm compression ball valves (heating)
b) l-15 mm compression ball valve main in boiler box obtaining
c) l-15 mm compression
d) l-15 mm compression outlet
2 15 fibrie washers
2 22 fibrie washers

Flue box containing (Fig. 12):
Standard Flue Assembly

58 Elbow Header
59 - Flue bend (Fig. 10) item 9
60 -Air intake duct
61 - Flue exhaust duct
62 -Terminal
65 - Pipe centering spring
66 Flue gas sample point
127 -Terminal Cover Plate

Fig. 10

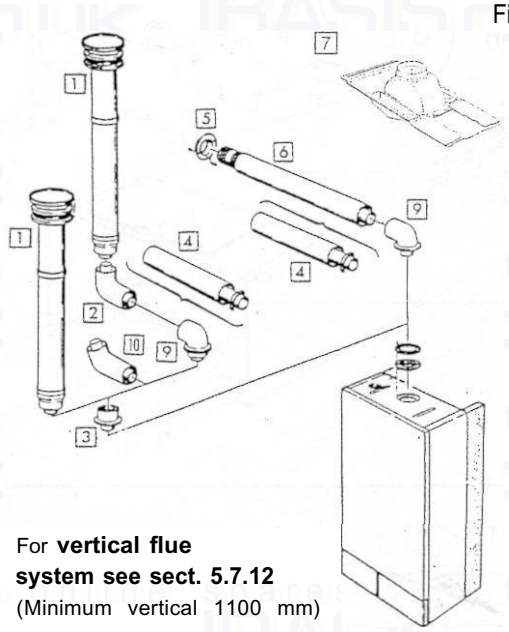

For **vertical flue system see sect. 5.7.12**
(Minimum vertical 1100 mm)

Fig. 12

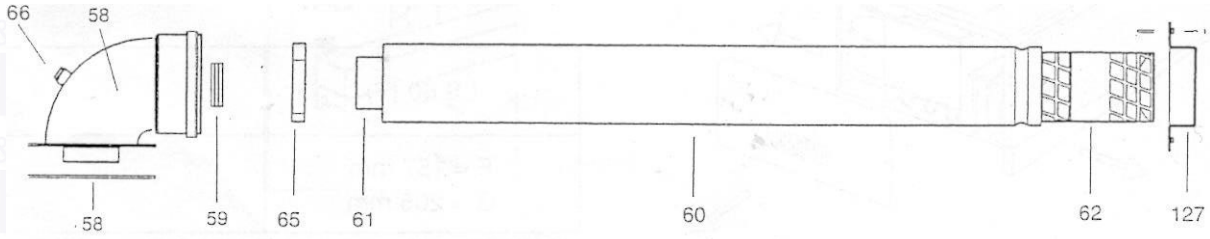

5.4 POSITIONING OF THE BOILER

5.4.1 Unscrew the 2 screws that fasten the lower grating on the casing and remove it the casing (Fig. 20).

5.4.2
- Remove the 4 screws that secure in the top, 2 in the bottom the casing (Fig. 19).
- Carefully slide the casing forward to lift off.

5.4.3 Make sure the casing and screws are put to one side in a safe place.

Fig. 19

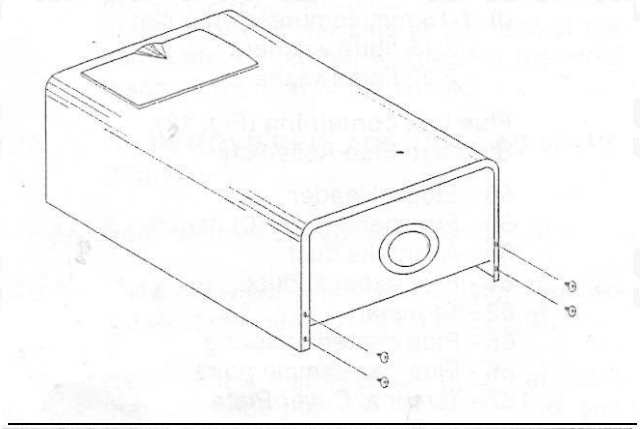

Fig. 20

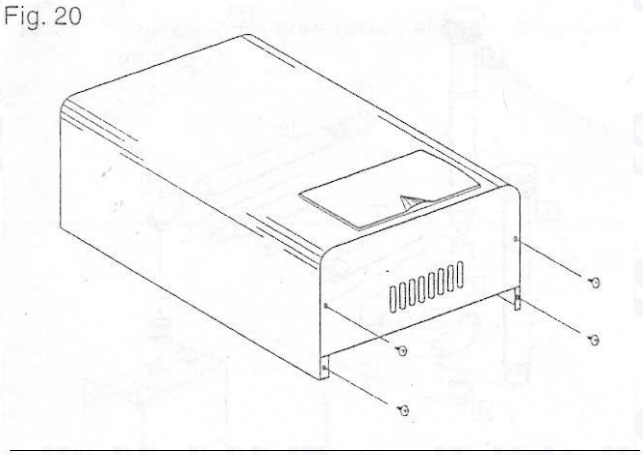

Fig. 21

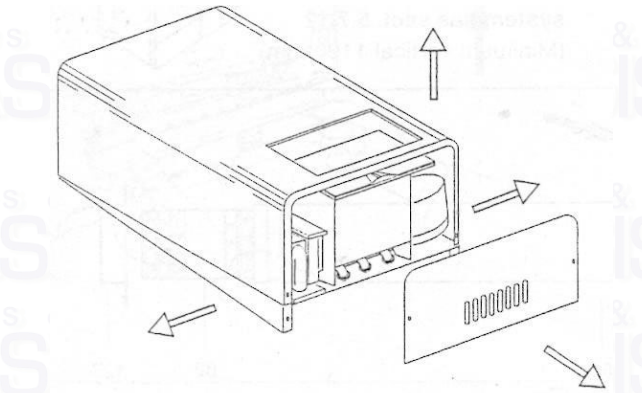

LS 80 (T)	
F = 157 mm G = 205 mm	

5.5 INSTALLINGTHE APPLIANCE FOR REAR FLUE OUTLET

5.5.1 Use adhesive tape to attach the template to the wall, making sure that the centre line is vertical.

- Mark the two boiler fastening holes on the wall as well as the centre of the flue duct.
- Detach the template from the wall.
- Use a 10 mm. dia drill to make the 2 boiler securing holes. Insert the plastic expansion plugs.
- Cut or core drill a 105 mm. dia hole for inserting the flue duct.
- Screw in the two upper coach bolts leaving them about 10 mm. out from the wall to enable the boiler to be located on the wall.

Fit the elbow header positioning it towards the required direction (Fig. 30).
IMPORTANT: Make sure that the elbow's dia. 60 mm duct is inserted into the fan, the rubber seal and orifice are been correctly located.

Fig. 29

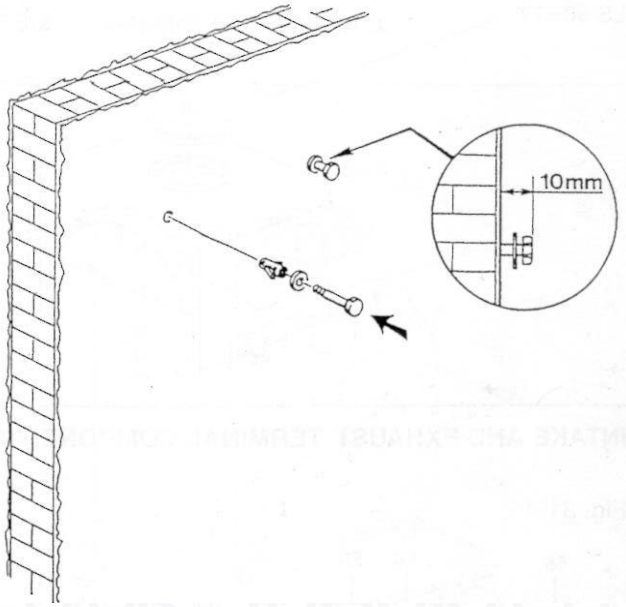

Fig. 28

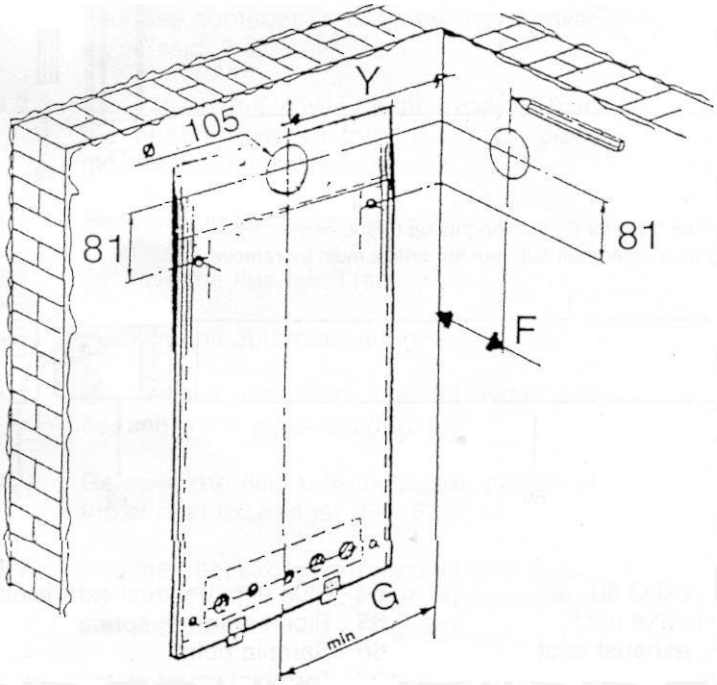

5.5.3 If the standard duct furnished with the boiler is too long it can be shortened.

Note: Should it be necessary to cut the flue, always cut equal amounts from both inner and outer pipes. Always cut the end furthest from the terminal.
Cut end must de-burred.

Fig. 32

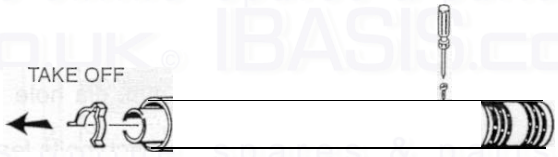

Fig. 30

Orifice plate concentric flue system:
LS 80 (T)=77 mm (NAT. GAS) - 76 mm (LPG)
LS 100 (T)=79 mm (NAT. GAS) - 78 mm (LPG)

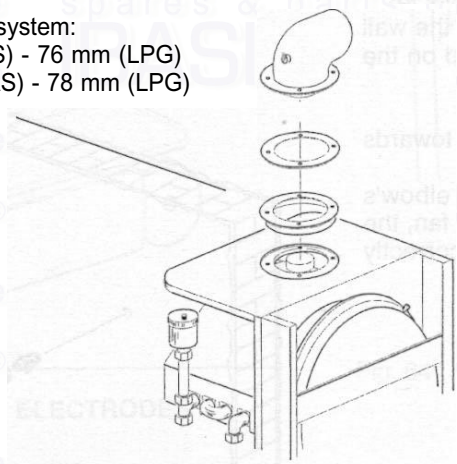

INTAKE AND EXHAUST TERMINAL COMPONENTS

Fig. 31

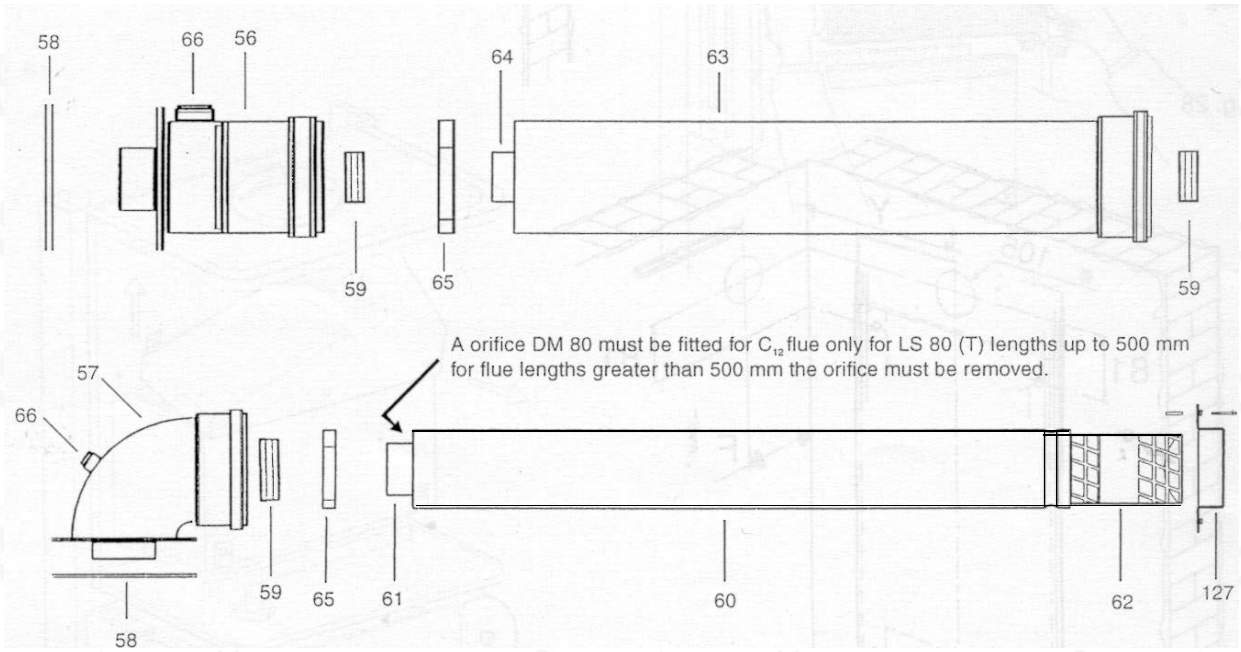

KEY

56 - Straight header
57 - Elbow header
58 - Header gasket
59 - Rubber seal 0 60
60 - STD air intake duct
61 - STD flue exhaust duct
62 - Terminal
63 - Air intake duct extension
64 - Flue exhaust duct extension
65 - Pipe centering spring
66 - Sample point
127 - Terminal cover plate
128 - Screw

5.5.4 Insert the flue assembly into the wall, being careful to make sure that the outer air duct comes flush to the inner surface of the wall.

5.5.5 Lift the boiler on to the wall (Fig. 34), locating onto the top coach bolts, and tighten all two securing bolts.

5.5.6 Working above the boiler pull the flue exhaust duct towards the boiler in order to engage tube 61 into its header 57 (Fig. 31).
Position flue into elbow header and push so as to locate inner and outer flue correctly.

Fig. 33

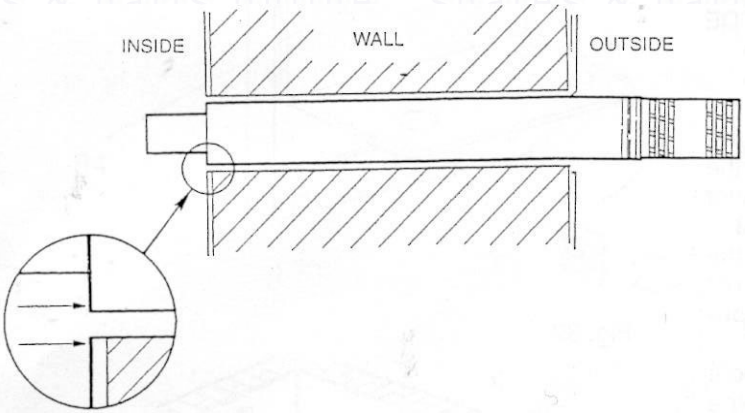

Fig. 34

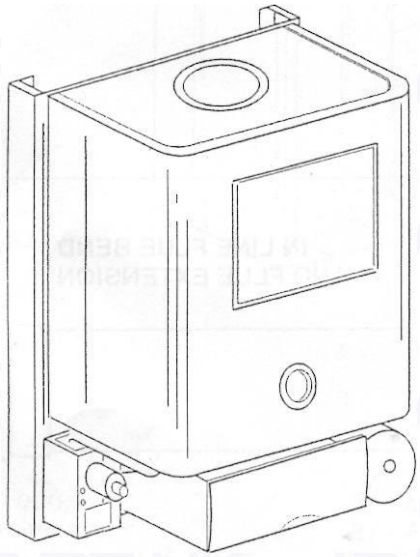

5.5.8 Fit terminal cover plate if required.

5.5.9 Extension kits are available on order

Fig. 35

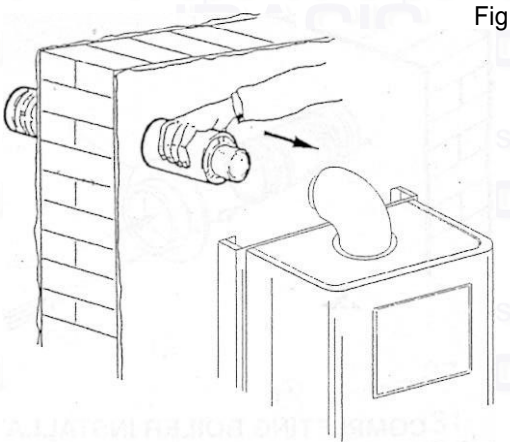

5.5.10 Each extension length extends the pipe by approximately 1000 mm long up to a maximum of three extensions.
Pipeline length can be established using the instructions in section 5.5 for rear flue outlets and section 5.7 for side flue outlets.
Extensions must be installed with the widened end of the air intake pipe and the tapered end of the flue pipe aimed towards the exhaust terminal. Extensions must be joined together with the standard terminal pipe, inserted in each other as far as they can go.
If an extension must be shortened, this must be done from the straight end, and not from the widened or tapered end. To measure the pipeline properly all components must be assembled and total length measured before cutting. The straight end of the extension connects to the boiler. The flue output pipe fits into the boiler header until it stops. (Fig. 31)
When cutting both inner and outer ducts of the extension, always ensure that the reduced end (male) of the inner duct is longer than the outer duct.
All joints must be sealed with the rubber seals supplied.
It is important to put the centering spacer, supplied with the unit, inside between the two pipes, from the side opposite the extension's straight end.

NOTE: a suitable support bracket is available from Ravenheat Manufacturing and should be used to support flue length at least every 1.8 metre preferably at each joint this bracket should be rigidly secured to wall and flue duct.

5.5.11 IN LINE FLUE BEND
Measure the distance between the flue bends or the flue/terminal assembly. The measurement should be taken from the outer edge of the flue and bend (Fig. 39B).

IMPORTANT: in line flue bend 750 mm must be deducted from overall length for each 90" bend. Obtuse flue bend - 375 mm must be deducted from overall length for each 135" bend (Fig. 39 B).

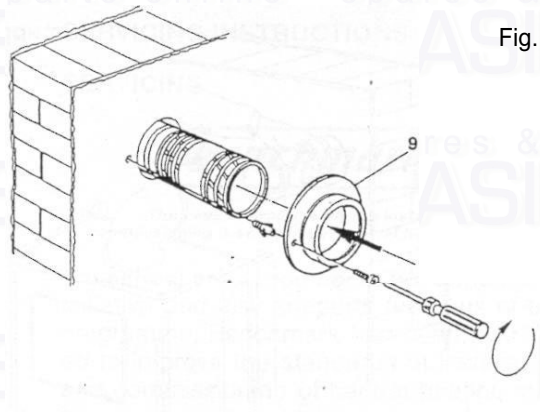

Fig. 37

5.6 COMPLETING BOILER INSTALLATION

5.6.1 Reassemble the outer casing (sect 5.4) proceeding in this order
1) Fit the casing.
2) Refit the lower grating (sect. 5.4).

5.7 INSTALLING THE APPLIANCE FOR SIDE FLUE OUTLET (Fig. 39)

5.7.1 -Attach the template to the wall with adhesive tape, making sure that the centre line is vertical and that the distance from the centre line to the nearest side wall is not less than MEASUREMENT IN TABLE 6.
- Mark the two boiler securing holes on the wall and extend the axis of the flue duct hole to the side wall ensuring it is horizontal.
-Trace the centre of the flue duct hole measure distance F (table 6). From the corner of the wall (Fig. 28), measure the distance y between the centre of flue duct hole to the corner. Detach the template from wall.
- Use a dia. 10 mm. drill to make the 2 holes for securing the boiler. Insert the plastic expansion plugs. Core drill 105 mm dia. hole In the side wall for inserting the flue duct.
-Screw in the two upper coach bolts leaving them about 10 mm out from the wall in order to enable the boiler to be located.

5.7.2 Positioning the elbow towards the required direction (Fig. 30).

5.7.5 If the standard duct furnished with the boiler is too long it can be shortened.

Note: Should it be necessary to cut the flue, always cut equal amounts from both inner and outer pipes. Always cut the end furthest from the terminal.
Cut end must de-burred.

Fig. 39

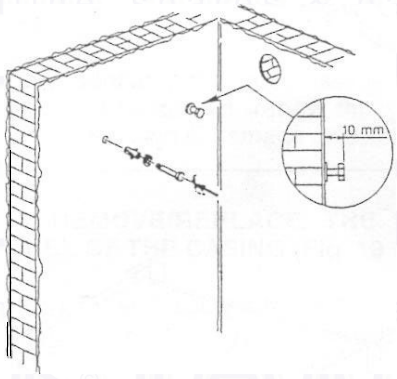

Fig. 39B

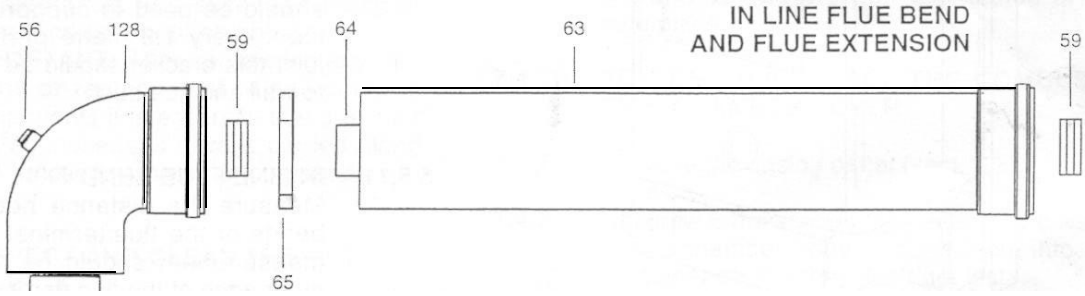

KEY
56 - Sample point (if required)
57 - Elbow Header
59 - Rubber seal 0 60
63 -Air intake duct extension
64 - Flue Exhaust duct extension
65 - Pipe centering spring
128 - In Line Bend (45” and/or 90”)

5.7.6 Insert the flue assembly into the wall, making sure it will not interfere when fixing the boiler on the wall.

5.7.7 Lift the boiler on the wall. Locate onto the top coach bolts. Fit the lower coach bolts and tighten all two securing bolts.

5.7.8 Working above the boiler pull the flue duct towards the elbow in order to engage tube into its header (Fig. 35).
Position flue into straight header and push so as to locate inner and outer flue correctly. Ensuring good seal is made with o.ring.

5.7.10 Fit terminal cover plate if required (Fig. 37).

57.11 Extension kits are available on order for flue extension of up to 3.5 metres total length (Fig. 31-39B). For further details see sect 5.5.10.

5.7.12.1 VERTICAL FLUE OPTIONS

The vertical flue kit is intended for use where a horizontal flue outlet is not Possible or desired. The vertical flue can be used either with a flat roof or a pitched roof (maximum pitch 60”). Where a straight vertical flue is not possible or desired, an offset vertical flue can be used in conjunction with a side horizontal flue extension piece and an inline 135190” flue bend (Fig. 41).

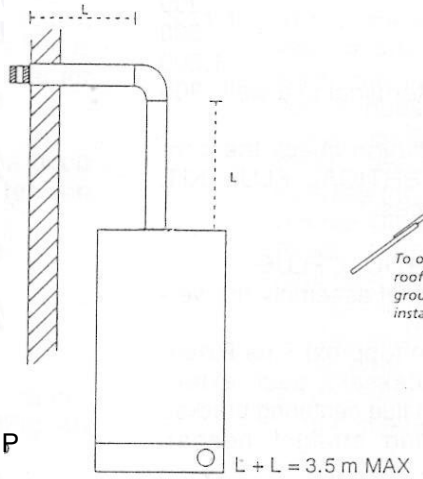

Fig.P

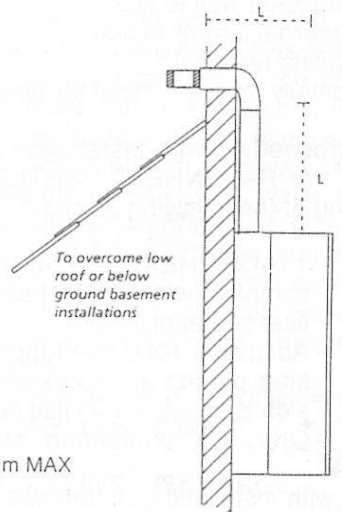

Fig. M

5.7.12 VERTICAL FLUE INSTRUCTION ONLY

INLINE FLUE BEND 750 MM MUST BE DEDUCTED FROM OVERALL LENGTH FOR EACH 90” BEND
OBTUSE FLUE BEND - 375 MM MUST BE DEDUCTED FROM OVERALL LENGTH FOR EACH 135” BEND

Fig. 41

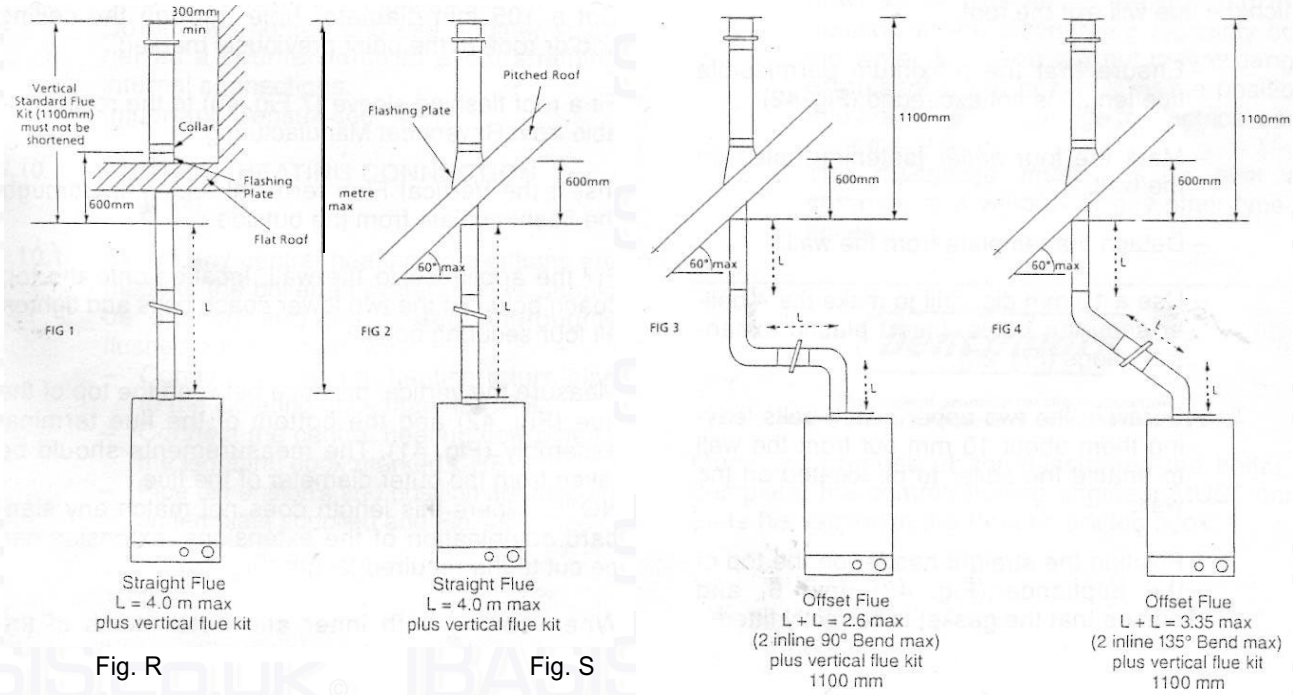

Fig. R Fig. S

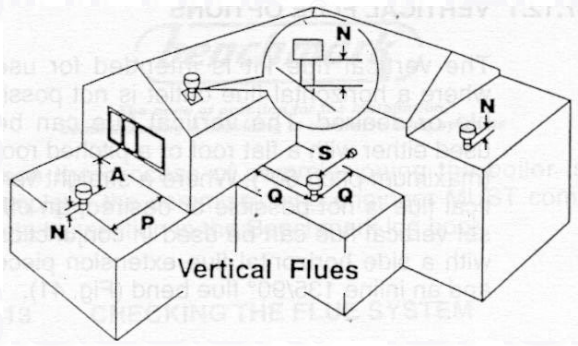

POSITION	MIN. DISTANCE mm
N above roof level (to base of terminal)	300
P from adjacent wall to flue	300
Q from internal corner to flue	300
S from facing terminal	1,200
M horizontally from a vertical terminal to a wall	300

Before proceeding with installation check the contents of the RAVENHEAT VERTICAL FLUE KIT, comprising of the following pieces:

- 1 RAVENHEAT VERTICAL FLUE complete with terminal assembly (for vertical flue application).
- Additional 1000 mm (approx) Flue Extension pieces as necessary, each extension is provided with flue centering bracket.
- One box containing straight header.

Proceed with installation as detailed in section 5 up to 5.5.1., ignoring all references to horizontal flue installations.

Use adhesive tape to attach the template to the wall, making sure that the centre line is vertical and that the flue centre line is virtually below the point at which the flue will exit the roof.

- Ensure that the maximum permissible flue length is not exceeded (Fig. 42).

- Mark the four boiler fastening holes on the wall.

- Detach the template from the wall.

- Use a 10 mm dia. drill to make the 4 boiler securing holes. Insert plastic expansion plugs (Fig. 29).

- Screw in the two upper coach bolts leaving them about 10 mm out from the wall to enable the boiler to be located on the wall.

- Position the straight header on the top of the appliance (Fig. 43) item 6, and ensure that the gasket is correctly fitted.

Important: Make sure that the flue header dia 60 mm duct is inserted fully onto the fan spigot.

Model	Max no of flue extensions	Overall max flue length	Distance to centre of flue from back wall
LS 80 (T)	4	5.3 metre	157 mm
LS 100 (T)	4	5.3 metre	157 mm

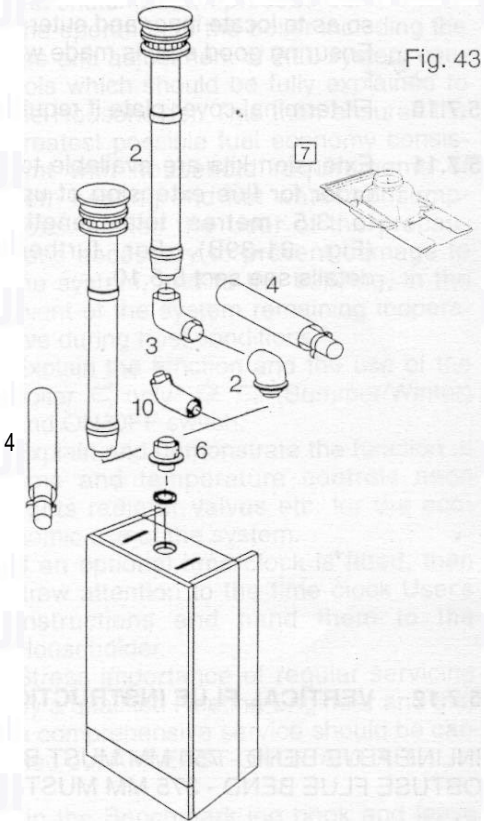

Fig. 43

Cut a 105 mm diameter hole through the ceiling and/or roof, at the point previously marked.

Fit a roof flashing sleeve (43 Fig. item 7) to the roof, available from Ravenheat Manufacturing.

Insert the Vertical Flue terminal assembly through the flashing plate from the outside.

Fix the appliance to the wall, locating onto the top coach bolts. Fit the two lower coach bolts and tighten all four securing bolts.

Measure the vertical distance between the top of the flue and the bottom of the flue terminal assembly. The measurements should be taken from the outer diameter of the flue (Fig. 41).
NOTE: Where this length does not match any standard combination of the extensions, extension can be cut to the required length (Fig. 44).

When cutting both inner and outer ducts of the extension, always cut on spigot side, and they must be de-burred.

Fig. 44

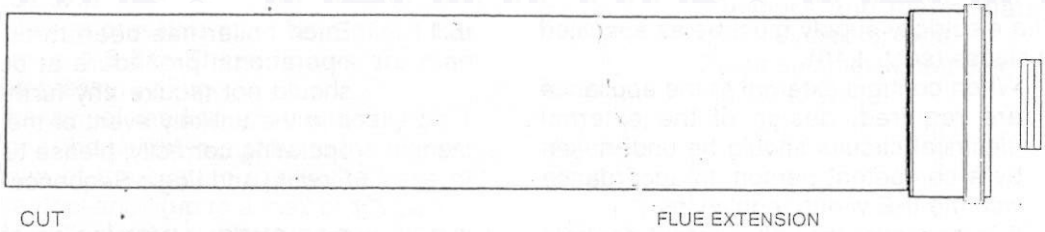

Starting at the appliance end, assemble the extension duct sections, making each inner and outer (flue) joint by inserting the spigot end into the socket end of the next tube. Make sure that the entire flue is adequately supported. Use at least one bracket for each extension used.

Ensure that all inner flue connections have a good fit/seal, and that the space clips in each extension are correctly positioned.

5.8 REASSEMBLE BOILER AS PER (sect. 5.6.1)

5.8.1 Fitting valves pack
Remove plastic caps from boiler connection and fit flanged valves as per Fig. 46 using washers provided.

5.9 GAS CONNECTION (Fig. 46)

5.9.1 A minimum gas pressure of 20 mbar (G20), 37 mbar (G31) and 28-30 (G30) must be available at the boiler inlet at full flow rate.

5.9.2 Fit gas service cock to the boiler via the union nut and connect gas pipe.
Do not overtighten and use another spanner as a counter force to avoid straining internal connections.
Important: Consult sect. 4.5.1

5.10 CENTRAL HEATING CONNECTION (Fig. 46)

5.10.1 Before any central heating connections are made to the boiler all system valves should be opened and the system thoroughly flushed out with cold water.
- Connect the central heating return pipe to the isolating cock marked CHR.
- Connect the central heating flow pipe to the isolating cock marked CHF.
- Pipe dimension's and position are marked on template supplied and Fig. 49A

5.11 DOMESTIC HOT WATER (Fig. 46)

5.11 .1 The domestic hot water circuit does not need a safety valve but it is essential to ensure 'hat the pressure of the cold water supply does not exceed 10 bar. If in doubt it is advisable to install a pressure reducing valve. The minimum pressure needed to operate the domestic hot water system is 0.5 bar with a flow of approx 3 Lts. per min. Flush out all foreign matter from the supply pipe before connecting to the appliance.
- Connect the 15 mm. cold water pipe to the stop cock to the appliance inlet marked DCW.
- Connect the 15 mm. hot water pipe with a suitable connection.

5.12 SAFETY VALVE DISCHARGE

5.12.1 The safety valve is located near the pump. It has a threaded outlet RC I/2" (to 15 mm copper) to permit a discharge pipe to be connected. When connecting ensure the discharge pipe does not restrict access.
The discharge should terminate facing downwards exterior to the building in a position where discharging (possibly boiling water & steam) will not create danger or nuisance, but in easily visible position, and not to cause damage to electrical components or wiring.
The discharge must not be over an entrance or & window or any other type of access.

---

benchmark™

The code of practice for the installation, commissioning & servicing of central heating systems

complete, the commissioning engineer MUST complete his section in the Benchmark log book.

5.13 ELECTRICAL CONNECTIONS

5.13.1 The electricity supply must be as specified in clause (sect. 4.10).

- When controls external to the appliance are required, design of the external electrical circuits should be undertaken by a competent person. In accordance with the IEE wiring regulations.
  It is essential that all external controls must be **volt free.**
  Factory fitted internal wiring must not be disturbed when wiring external controls.
- To gain access to the electrical box remove the front panel of the case as described in clauses (sect. 5.4.1) and the instrument panel as described in clauses (sect. 5.4.3).
- The terminals are easily visible on the front of the electronic control board (Fig. 48).
- Heat resistant flexible cable is fitted between the isolator and the terminal block. It is a 3 core cable of 0.75 mm^2 (24x0,2 mm) to BS 6500.
  Make sure all wires to the appliance are routed away from sharp edges and hot surfaces.
  The cable must be fastened with its cord anchorage and connected so that should the cable slip from the anchorage the current carrying conductor does not become taut before the earthing conductor.
  Securely tighten all terminal screws and arrange the cable with slack between the cord anchorage and the terminal block.

WARNING: If the supply cord is damaged, it must be replaced by a service engineer (supply cord available from Ravenheat Manufacturing Ltd).

5.14 PROGRAMMABLE TIME CLOCK

Instructions for use Consult User's Guide.

SECTION 6 COMMISSIONING

6.1 Each boiler has been through a rigorous operational procedure at our factory and should not require any further adjustment. If in the unlikely event of the appliance not operating correctly, please turn to the Fault Finding and Logic Sequence charts.

6.2 GAS SUPPLY INSTALLATION

6.2.1 Inspect the entire installation including the gas meter, test for soundness and purge, all as described in BS 6891.

6.3 ELECTRICAL INSTALLATION

Preliminary electrical system checks to ensure electrical safety shall be carried out by a competent person (earth continuity, polarity, resistance to earth). Those checks are outlined in the <<Instructions for British Gas Multimeter,, Booklet. If a fault has occurred on the appliance the fault finding procedure should be followed as specified under the servicing section of this document.

6.4 INITIAL FILLING OF THE SYSTEM

Open central heating flow and return valves.
Unscrew the cap on automatic air release valve one full turn (leave open permanently).

- Close all air release taps on the central heating system.
- Gradually open stopcock at the filling point connection to the central heating system until water is heard to flow.
- Starting with the lowest radiator open each air release tap in turn. Close it only when clear water, free of bubbles, flows out. In the same way release air from any high points in the pipework.
- Continue filling the system until at least 1.5 bar registers on gauge. Then turn off the filling points stopcock.
- Inspect the system for water soundness and remedy any leaks discovered.

Fig. 49/A POSITIONING OF WATER AND GAS CONNECTIONS

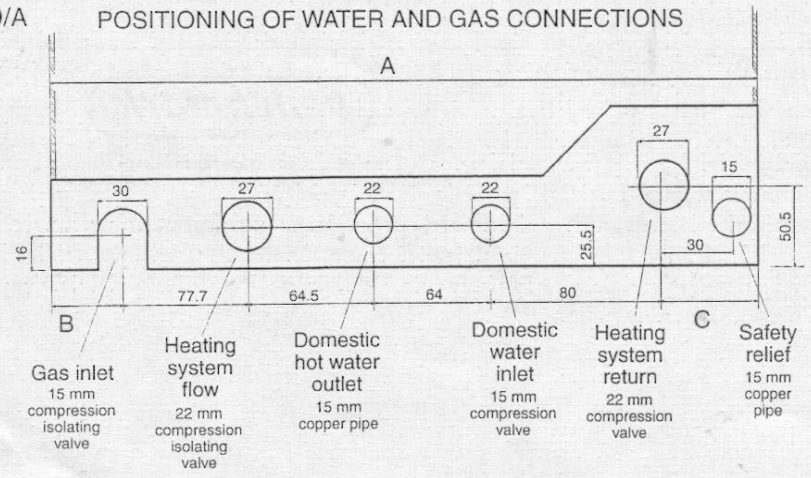

	A	B	C
LS 80 (T)	400	50.5	63.3
LS 100 (T)	450	75.5	88.3

6.5 SETTING THE SYSTEM DESIGN PRESSURE

The design pressure must be a min. 1 bar and max. 1.5 bar. These figures are read off the pressure gauge.

- The actual reading should ideally be 1 bar + the height in metres to the highest point of the system above the base of the appliance (up to a max of 1.5 bar).
  N.B.: The safety valve is set to lift a 3 bars (30 mt/42.5 psig).
- To lower the system pressure to the required value remove drain point (Fig. 93) or drain on the heating circuit.

6.6 FILLING THE HOT WATER SYSTEM

Close all hot water draw-off taps.
Open the cold water inlet cock.
Slowly open each draw-off tap until clear water is discharged.

6.7 LIGHTING THE BOILER (Fig. 50)

Before lighting the main burner make sure that the heating circuit flow and return valves are open and also that the cold water input cock is also open.

- If external controls are installed (e.g. timeclock and thermostat) make sure that they call for heat.
- Press summer/winter selector switch la Fig. 50 to winter.

Fig. 46

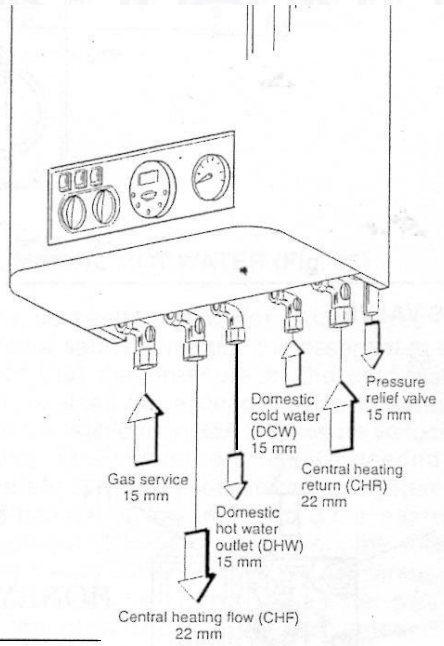

ELECTRICAL CONNECTION

Fig. 48

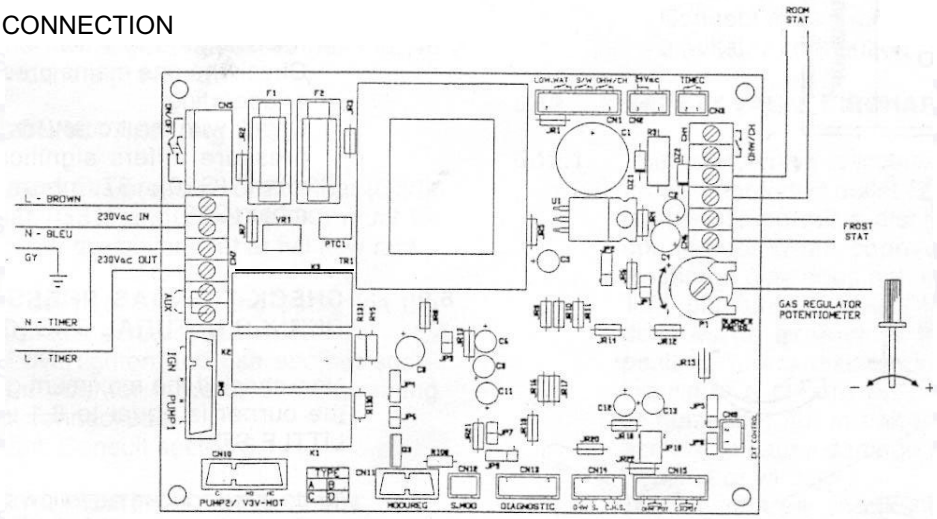

Fig. 49

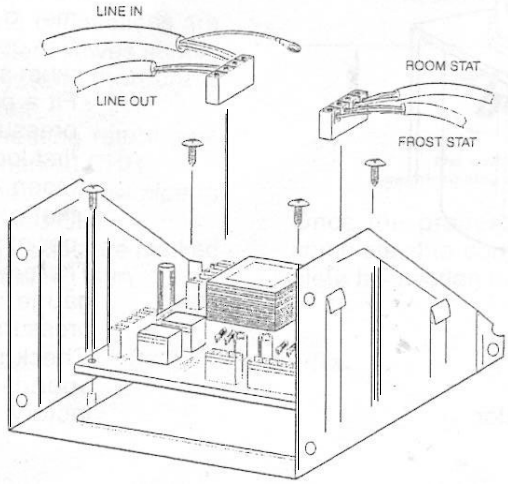

INSTRUMENT PANEL

Fig. 50

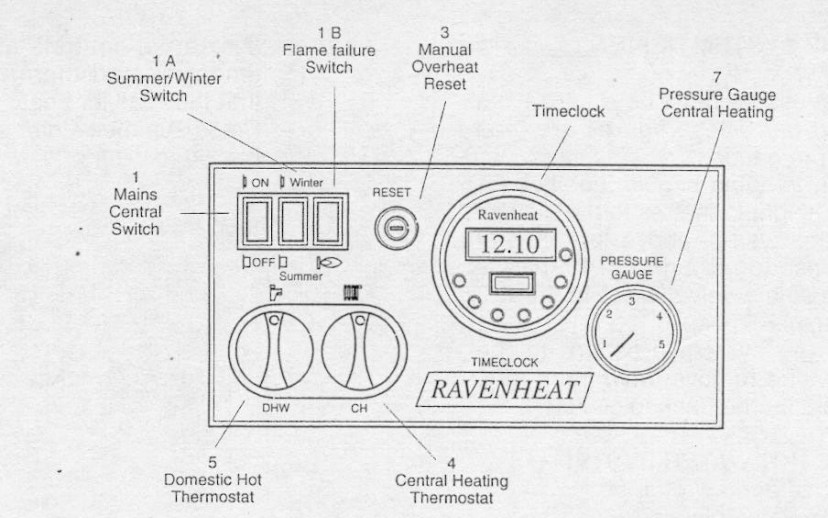

GAS VALVE

Fig. 51

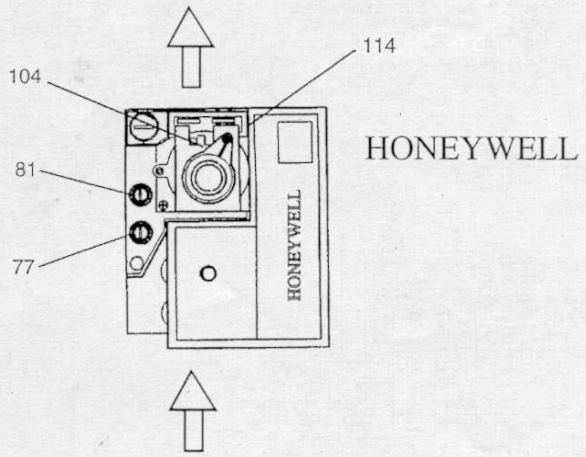

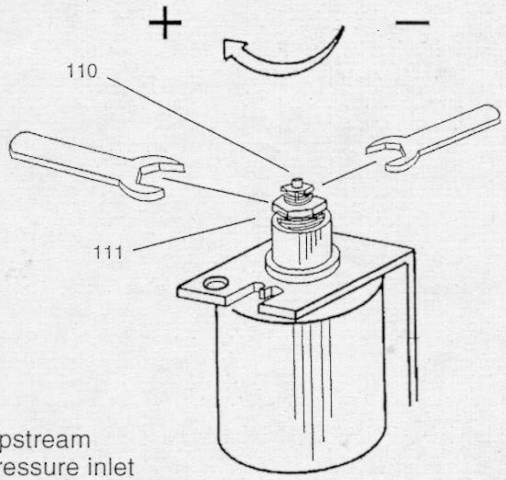

KEY

77 - Upstream pressure inlet
81 - Downstream pressure outlet
104 - Gas valve modulator
110 - Max. regulator nut
111 - Min. regulator nut
114 - Electrical connections modulator

– Turn control thermostat 4 up to its maximum setting.

– Now the main burner should turn on.

With leak detection fluid test for gas soundness of all gas components and joints.

– See paragraph 6.14 for regulating the heating circuit thermostat.
Check gas mains pressure (Fig. 52). Fit a gas pressure gauge on pressure inlet 77 (Fig. 51) on the gas valve, after releasing the seal screw.
Check the gas mains pressure with boiler operating.
Check with the Local Gas Supplier if the pressure differs significantly from 20 mbar (G20), 37 mbar (G31), 28-30 mbar (G30).

6.9 CHECK THE GAS PRESSURE AT THE BURNER NATURAL GAS (G 20)

Now check if the maximum gas pressure at the burner is equal to 8.1 ± 0.5 mbar for LS 80 (T) or 12.5 ± 0.5 mbar for LS 100 (T).

To do this proceed as follows:

– Turn off main switch 1 (Fig. 50)
  - Set main switch 1(Fig. 50) on summer ☼.
  - Set control thermostat 5 at its maximum setting.
  - Fit a pressure gauge, using a hose, to pressure test point 81, (Fig. 51), after first loosening its close-off screw.
  - Open one or more hot water taps so that at least 10÷12 litre of water flows per minute.
– The pressure indicated on the pressure gauge is the maximum operating gas pressure.
– Check if the minimum pressure corresponds to 1.5 mbar LS 80 (T), or 1.4 mbar LS 100 (T) as is set at the factory.

Detach one of the wires going to modulator 104 (Fig. 51) and make the boiler operate just as was done for checking the maximum pressure.

Observe electrode. It should be about 3-4 from the burner (Fig. 52B).

6.9.1 CHECK THE GAS PRESSURE AT THE BURNER LPG (G 31) - (G30)

Now check if the maximum gas pressure at the burner is equal to 35,4 (G31) ± 0.5 mbar or 27.3 (G30) ± 0.5 mbar.

To do this proceed as follows:
Turn off main switch 1 (Fig. 50)
- Set summer/winter switch 1 on summer ☼
- Set control thermostat 5 at its maximum setting.
  Fit a pressure gauge, using a hose, to pressure test point 81 (Fig. 51), after first loosening its close-off screw.
  Open one or more hot water taps so that at least 10+12 litre of water flows per minute.

The pressure indicated on the pressure gauge is the maximum operating gas pressure.

-Check if the minimum pressure corresponds to 9.6 mbar (G31), 6.6 mbar (G30) for LS 80 (T) or 6.1 mbar (G31), 4.7 mbar (G30) for LS 100 (T) as is set at the factory.
Detach one of the wires going to modulator 104 (Fig. 51) and make the boiler operate just as was done for checking the maximum pressure.

6.10 ADJUSTING MINIMUM AND MAXIMUM PRESSURE (Fig. 51) HONEYWELL GAS VALVE

- Remove cap covering modulator to gas valve.
- Detach one of the cables connected to the modulator 114.
- With the boiler operating use a 9 mm spanner to turn the nut 111 clockwise to increase pressure and anti-clockwise to decrease pressure.

6.11 RECONNECTTHE DETACHED CABLE

Use a screw-driver to hold nut 111 firm a 9 mm spanner and use a 7 mm spanner wrench to rotate the nut 110 clockwise to increase the pressure and counter-clockwise to decrease it.
After adjustment turn off D.H.W.Taps.

6.12 SETTING CENTRAL HEATING GAS PRESSURE THE BOILER COMES SET AT MID POSITION RATING FOR USE ON C.H. (table 1/2/3/4)

When the boiler operates in the C.H. mode the gas pressure at the burner can be set between the min. and max. values.
This permits capacity to be adjusted to suit system demand. If adjustment is required proceed as follows:
- Remove the casing. Unscrew the two screws holding the control box and lift off the cover.
- Switch summer/winter switch to winter position.
- Turn control thermostat 4 to maximum setting (Fig. 50).
- Check all external controls are on and calling for heat ensure all D.H.W. taps are off.
- With boiler operating use a screwdriver to turn potentiometer (Fig. 48) clockwise to increase pressure and anti-clockwise to decrease pressure.
- To obtain the desired heat value establish pressure as per (Fig. 52).
- Replace the protective cover.
- Once this pressure is established, mark it up on data badge with adhesive red label/arrow burner pressure setting so that this can be referred to and checked during future servicing.

RATIO BETWEEN BURNER PRESSURE AND OUTPUT NATURAL GAS (G 20) LPG (G30 - G31)

Fig. 52

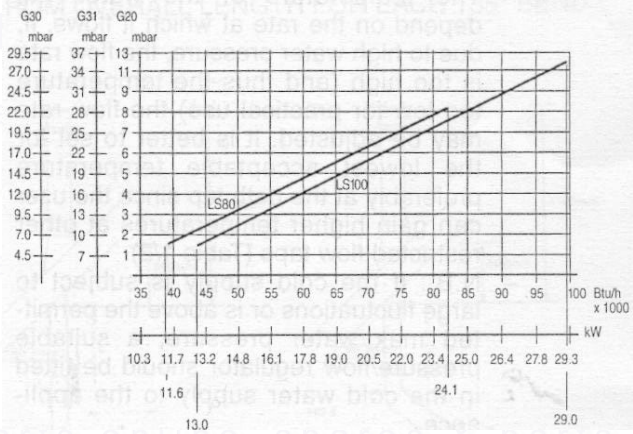

Fig. 52B

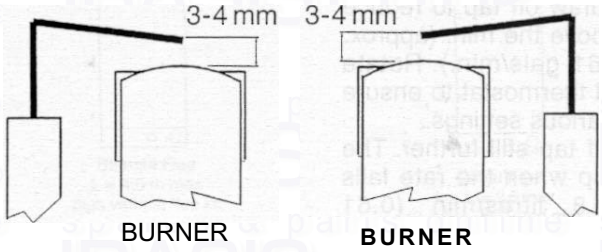

Once the process of commissioning the boiler is complete, the commissioning engineer MUST complete his section in the Benchmark log book.

6.13 CHECKING THE FLUE SYSTEM

6.13.1 The flue system should be visually checked for soundness. Check all fixings are secure and tight.

6.14 CHECKING THE HEATING THERMOSTAT

6.14.1 Allow the system to warm up and then turn the C.H. thermostat to ensure the main burner modulates from “high” to “low” and “low” to “off” and vice versa (scale range covers approx. 45” C 85” C).

6.15 TESTING AND REGULATINGTHE DOMESTIC HOT WATER SYSTEM FLOW

6.15.1 To put the appliance in operation with the (summer/winter) switch in winter position.

- Open a domestic hot water tap (preferably the bath tap). Ensure cold water inlet stopcock is open and the D.H.W. thermostat 5 (Fig. 50) is set at maximum.
- If the burner does not light check that the water flow rate is above the min. required to operate the differential pressure 2.8 Lts./min. (0.61 gals/min).
- The temperature of the water will depend on the rate at which it flows. If, due to high water pressure, the flow rate IS too high (and thus the temperature too low for practical use) the flow rate may be adjusted. It is better to set for the lowest acceptable temperature preferably at the bath tap since the user can gain higher temperatures at other restricted flow taps (Table 112).
- N.B.: If the cold supply is subject to large fluctuations or is above the permitted max. water pressure, a suitable pressure/flow regulator should be fitted in the cold water supply to the appliance.
- Turn the appliance mode selector switch 1 (Fig. 50) to the summer position☼. Slowly close the draw off tap to reduce the flow rate to above the min. (approx. 2.8 litre/min - 0.61 gals/min.). Rotate the D.H.W. control thermostat to ensure it operates at its various setting.
- Close the draw-off tap still further. The burner should stop when the rate falls below about 2.8 litres/min (0.61 gals/min.).

6.16 HANDING OVER TO THE USER

6.16.1 After completion of installation and commissioning of the system, the installer should hand over to the Householder by taking the following actions:

- Hand the “User’s Instructions” to the Householder and explain His/Her responsibilities under the “Gas Safety Regulations 1996”.
- Explain and demonstrate the lighting and shutting down procedures.
- The operation of the boiler including the use and adjustment of ALL system controls which should be fully explained to the Householder. This then ensures the greatest possible fuel economy consistent with household requirements of both heating and hot water consumptions. Advise the User of the precautions necessary to prevent damage to the system, and to the building, in the event of the system remaining Inoperative during frost conditions.
- Explain the function and the use of the boiler ⊏ only/ ☼ ⊏ (Summer/Winter) and ON/OFF switch.
- Explain and demonstrate the function of time and temperature controls neon lights radiator valves etc. for the economic use of the system.
- If an optional time clock is fitted, then draw attention to the time clock User’s Instructions and hand them to the Householder.
- Stress importance of regular servicing by a qualified Heating Engineer and that a comprehensive service should be carried out AT LEAST ONCE A YEAR.

Fill in the Benchmark log book and leave completed with the customer.

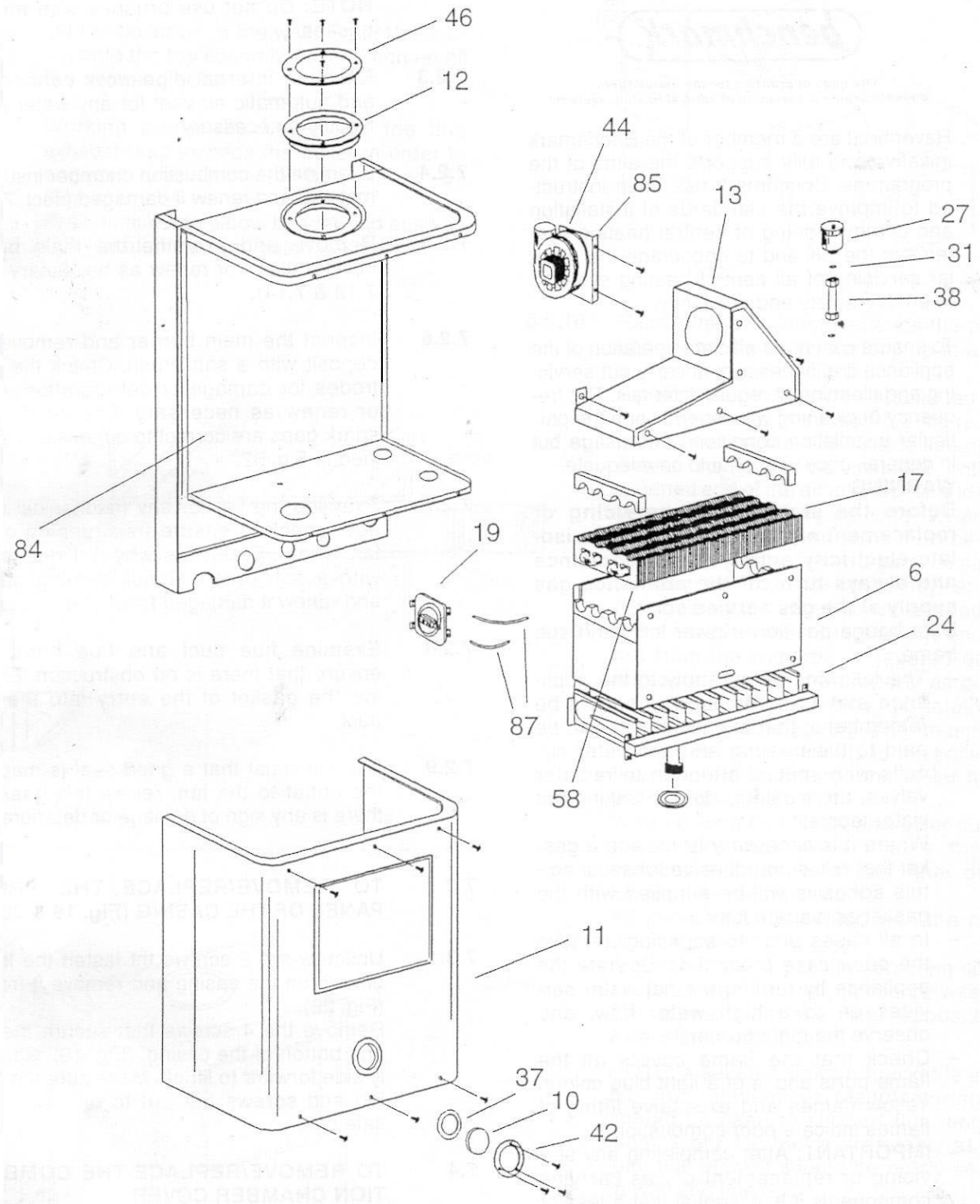

KEY

6 - Main burner
11- Chamber cover
10- Combustion chamber
12- Air restriction ring
13- Flue gas exhaust hood
17- Heat exchanger
19- Air pressure switch
24- Main burner
27 - Auto air vent valve
31- Seal
37- Gasket 48 x 42 x 1
38- Connection pipe
42- Window clamp ring
44- Fan
46 - Header gasket
58 - Ceramic insulation
84- Depression chamber
85 - Fan fastening bracket
87- Nylos tuber from pressure switch

SECTION 7 SERVICING INSTRUCTIONS

7.1 SERVICING

benchmark™

The code of practice for the installation, commissioning & servicing of central heating systems

Ravenheat are a member of the Benchmark initiative and fully supports the aims of the programme. Benchmark has been instructed to improve the standards of installation and commissioning of central heating systems in the UK and to encourage the regular servicing of all central heating systems to ensure safety and efficiency.

7.1.1 To ensure continued efficient operation of the appliance it is necessary to carry out servicing and cleaning at regular intervals. The frequency of cleaning will depend upon the particular installation conditions and usage but in general. once year should be adequate.

WARNING

Before **the start of any servicing or replacement of components always isolate electricity supply to the appliance and always turn off the appliance gas supply at the gas service cock.**

Data badge position - lower left hand sub frame.

- The following notes apply to the appliance and its controls but it should be remembered that attention must also be paid to the heating and hot water circuits with special attention to radiator valves, thermostats, clocks, leaking hot water taps etc.
- Where it is necessary to replace a gasket that relies on adhesive for securing - this adhesive will be supplied with the gasket as a spare item.
- In all cases prior to servicing, remove the outer case (sect. 5.4). Operate the appliance by turning the hot water services on to a high water flow, and observe the main burner.
- Check that the flame covers all the flame ports and is of a light blue colour. Yellow flames and excessive lifting of flames indicate poor combustion.
- IMPORTANT: After completion any servicing or replacement of gas carrying components it is essential that a test for gas soundness is always carried along with functional checks in operation.

7.2 TO INSPECT AND CLEAN THE APPLIANCE

7.2.1 Before carrying out cleaning operation, cover the electrical control panel with a piece of waterproof material to protect it from debris.

7.2.2 Inspect the heat exchanger for any blockage. Deposits of any material should be brushed always using a soft brush.
NOTE: Do not use brushes with metallic bristles.

7.2.3 Examine internal pipe-work connections and automatic air vent for any water leaks. Rectify if necessary.

7.2.4 Examine the combustion chamber insulating material and renew if damaged (sect. 7.9).

7.2.5 Remove and examine the main burner injector clean or renew as necessary (sec. 7.12 & 7.14).

7.2.6 Inspect the main burner and remove any deposit with a soft brush. Check the electrodes for damage or deterioration, clean or renew as necessary. Ensure that the spark gaps are correct to dimensions specified in Fig. 52.

7.2.7 Examine the fan for any mechanical damage, check to ensure free running of the fan wheel. Clean the wheel if necessary with a soft brush. Check sealing gasket and renew if damaged (sect. 7.6).

7.2.6 Examine flue duct and flue hood and ensure that there IS no obstruction. Examine the gasket at the entry into the flue duct.

7.2.9 It is essential that a good seal IS made at the outlet to the fan, renew this gasket if there is any sign of damage or deterioration.

7.3 TO REMOVE/REPLACE THE FRONT PANEL OF THE CASING (Fig. 19 & 20)

7.3.1 Unscrew the 2 screws that fasten the lower grating on the casing and remove it from it (Fig. 22)
Remove the 4 screws that secure the top and bottom of the casing. (Fig. 19). Carefulv side forward to lift off. Make sure the casing and screws are put to one side in a safe place.

7.4 TO REMOVE/REPLACE THE COMBUSTION CHAMBER COVER

7.4.1 Remove the casing panel (sect. 7.3).

7.4.2 Unscrew 6 the screws that fasten the cover to the chamber body and put them into a container so that they don't get lost.

7.4.3 Pull the cover forward to lift off.

7.4.4 Reassemble in reverse order.
Ensure good seal of cover when replacing.

7.6 TO REMOVE/REPLACE THE FAN ASSEMBLY (Fig. 58)

7.6.1 Remove front casing (sect. 7.3).
Remove combustion chamber front cover as in (sect. 7.4).

7.6.2 Disconnect the electrical connections from the fan motor:

7.6.4 Support the fan and remove the two fixing screws and bracket from the front of the flue hood.
Push down and carefully withdraw it from the appliance.
Place in a safe place until required. Reassemble in reverse order. Ensure wires are connected correctly (Fig. 94).

7.7 TO REMOVE/REPLACE THE FLUE HOOD (Fig. 60)

7.7.1 Remove front casing (sect. 7.3).
Remove combustion chamber front cover as in (sect. 7.4). -

7.7.2 Remove the fan (sect. 7.6).

7.7.3 Remove the three screws on the front that fasten hood to the combustion chamber.

7.7.4 Remove the two screws at the rear of hood.

7.7.5 Pull the flue hood upwards and then remove by tilting forward (Fig. 61).

7.7.6 Replace in reverse order.

7.8 TO REMOVE THE HEAT EXCHANGER (Fig. 62-63-64)

7.8.1 Remove front casing (sect. 7.3).
Remove combustion chamber front cover as in (sect. 7.4).

7.8.2 Close the on/off valves for the heating. Drain the heating system from the drain point mounted on the system (Fig. 93).

7.8.4 Remove the fan (sect. 7.6).

7.8.5 Remove the flue hood (sect. 7.7).

7.8.8 Remove the automatic air vent (Fig. 92).

7.8.9 Disconnect unions for the hot water and heating water pipelines (Fig. 62).

7.8.11 Remove the two side insulation panels at top of heat exchanger (Fig. 63).

7.8.12 Pull the heat exchanger up until its connections come out from the combustion chamber and then remove it (Fig. 64).

7.8.13 Replace in reverse order.
Ensure correct wire position (Fig. 94).

IMPORTANT: When replacing a heat exchanger new seals must be used.

7.9 TO REMOVE/REPLACE COMBUSTION CHAMBER INSULATION PANELS (Fig. 64).

7.9.1 Remove casing (sect. 7.3).
Remove combustion chamber front cover (sect. 7.4).
Remove fan assembly and flue hood (sect. 7.6 & 7.7).
Remove main burner (sect. 7.15).
Remove top insulation pieces at sides.
Remove 2 screws securing combustion chamber.
To rear of boiler and power chamber carefully remove all insulation panels.

7.9.2 Replace in reverse order.

Fig. 58

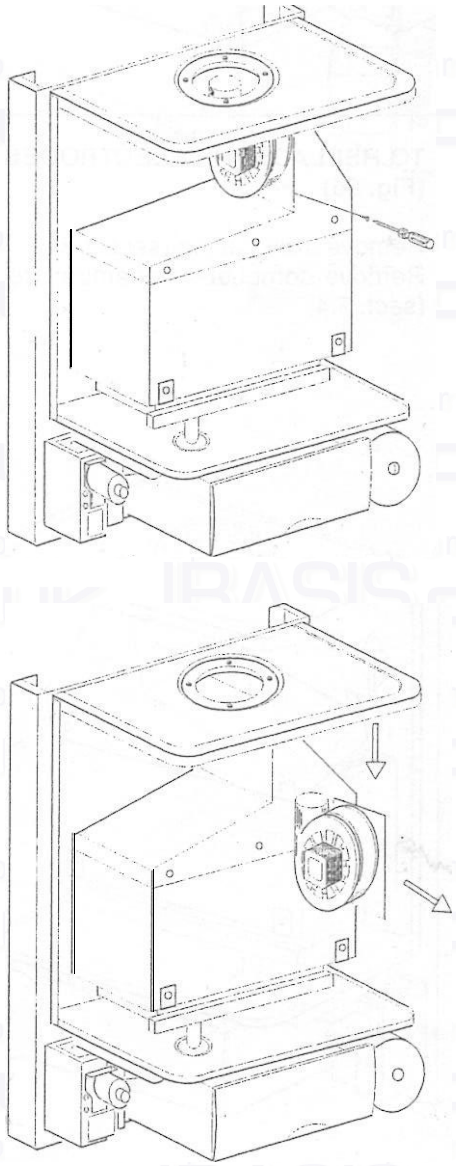

Fig. 60

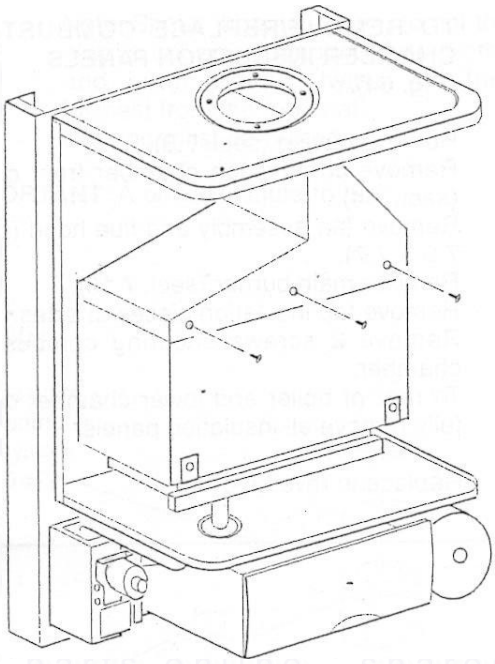

Fig. 63

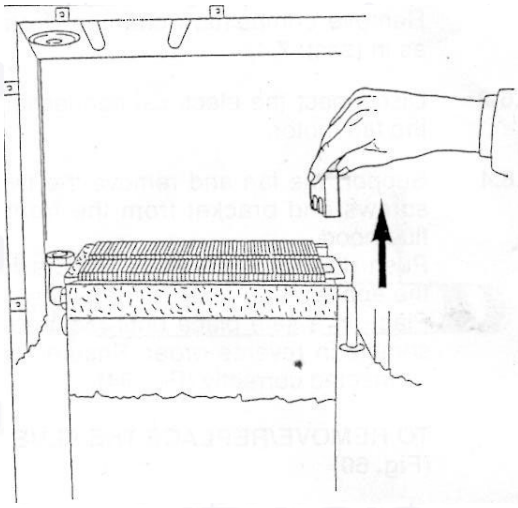

7.10 TO REPLACETHE ELECTRODES (Fig. 66)

7.10.1 Remove front casing (sect. 7.3). Remove combustion chamber front cover (sect. 7.4).

Fig. 61

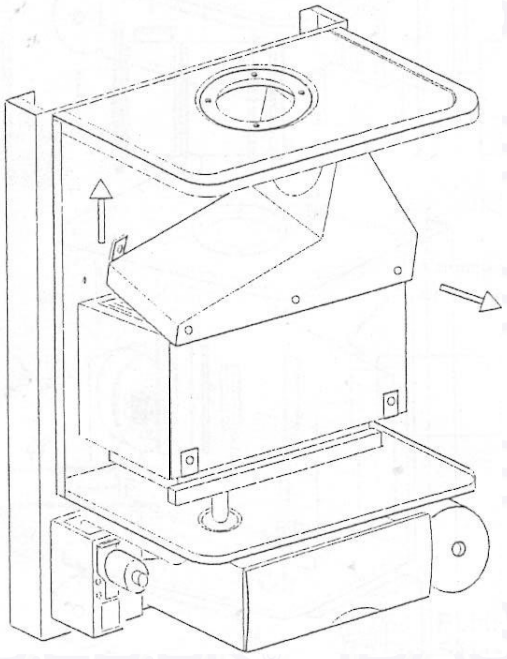

Fig. 64

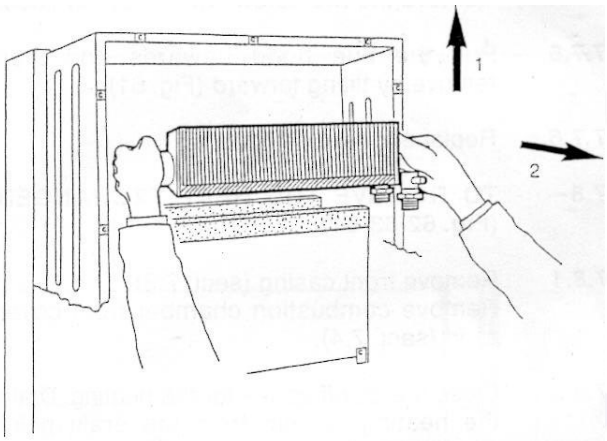

7.10.2 Detach the wire from electrode and then unscrew the screw that secures it to the burner assembly and remove.

7.10.3 Replace with new electrode in reverse order

7.14 TO REMOVE/REPLACE THE MAIN INJECTORS

7.14.1 Remove the front panel of the casing and the combustion chamber front cover (sect. 7.3 & 4).

7.14.2 Unscrew the union (Fig. 70)

7.14.3 Unscrew the 4 screws securing the injector manifold to the burner (Fig. 71).

7.14.4 Pull the manifold up and out from the combustion chamber (Fig. 72).

7.14.5 Unscrew and replace the injectors and their seals. (Fig. 73).

7.14.6 Replace in reverse order.

Fig. 70

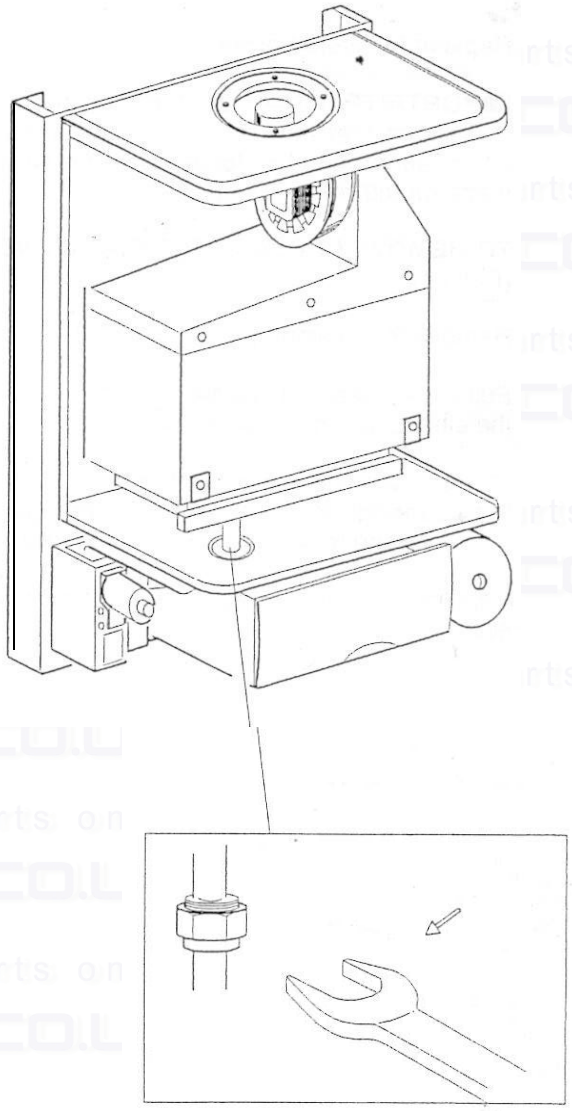

Fig. 71

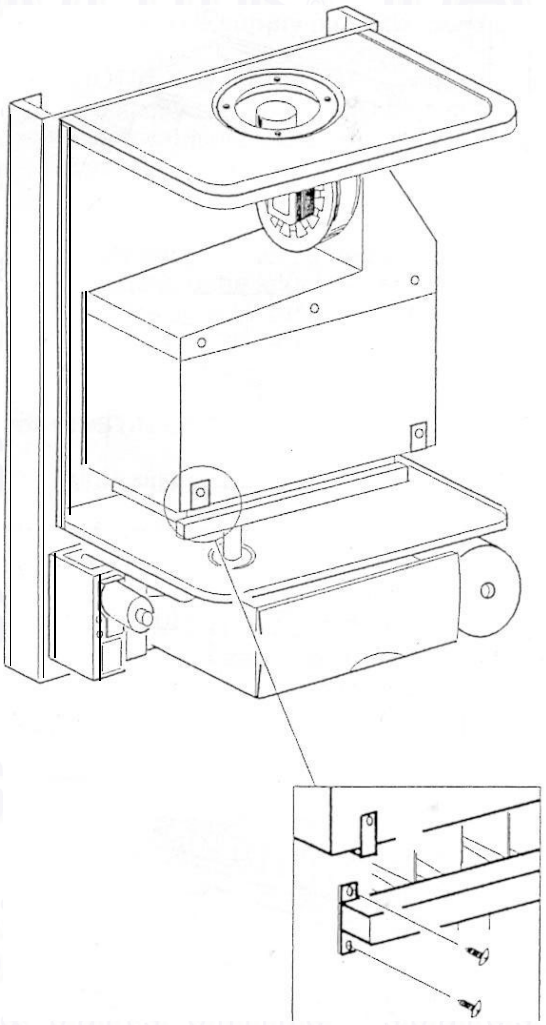

7.15 TO REMOVE/REPLACE THE MAIN BURNER

7.15.1 Remove the front panel of the casing and the combustion chamber front cover (sect. 7.3 & 7.4).

7.15.4 Remove the injectors manifold as described in sect. 7.14.

7.15.5 Remove the two screws securing the main burner to the combustion chamber (Fig. 74).

7.15.6 Pull the burner forward and remove (Fig. 75).

7.15.7 Replace in reverse order

IMPORTANT: When refitting the burner make sure that the pins at the rear of the combustion chamber locate into the slots made on the rear of the burner.

7.16 TO REMOVE/REPLACE THE GAS VALVE (Fig. 51)

7.16.1 Remove front casing panel (sect. 7.3)

7.16.4 Pull the 2 wires from the Modulator. Remove the electronic ignition board (7.32.2/3).

7.16.7 Remove the eight screws (four per side) that connect the gas valve to the gas pipelines and then remove it from its seat.

7.16.8 Replace in reverse order, always using new seals.

Fig. 72

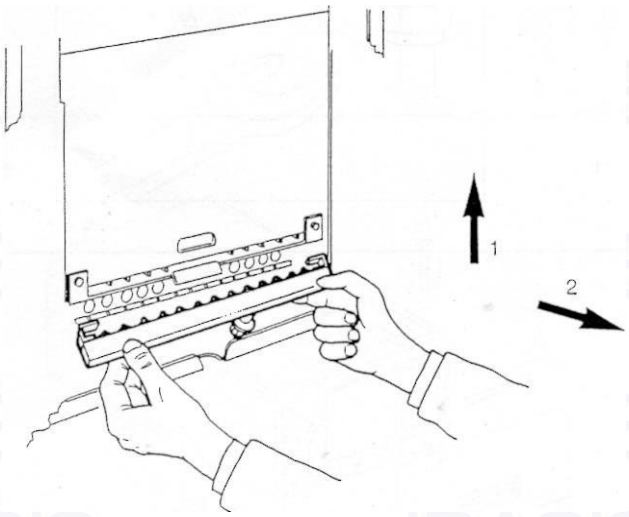

Fig. 73

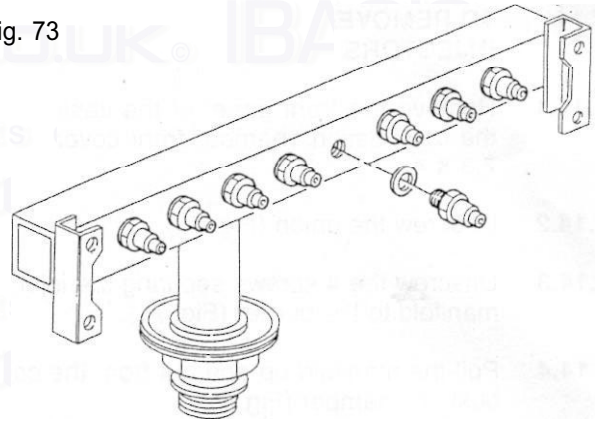

Fig. 74

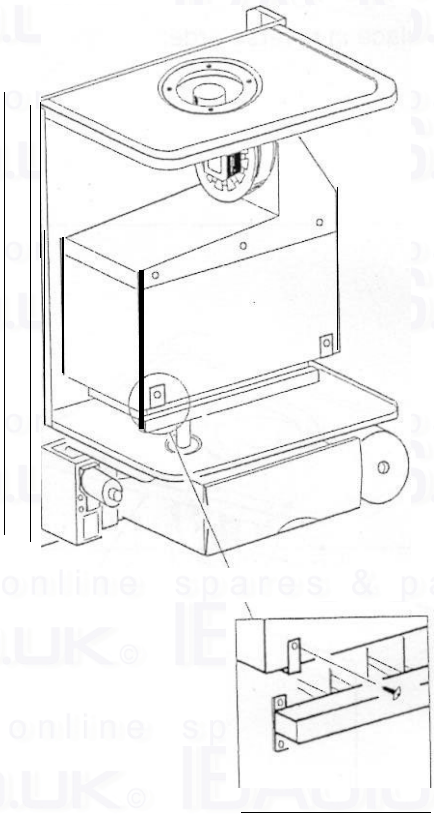

Fig. 75

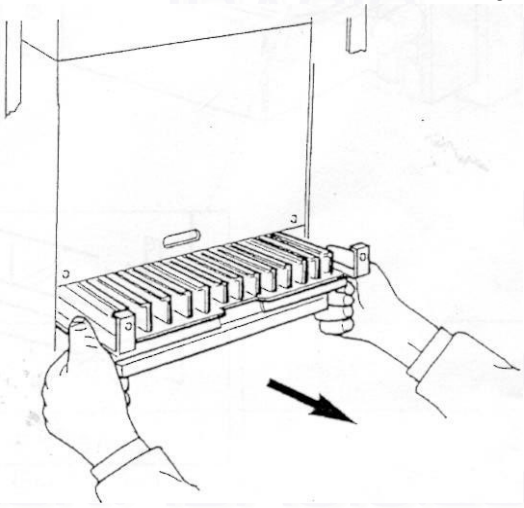

7.19 TO REMOVE/REPLACE THE HEATING CONTROL AND DOMESTIC HOT WATER CONTROL

7.19.1 Remove the casing (sect. 7.3) lower the instrument panel by unscrew the 2 screws holding up the instrument panel and control box and lower it down on its awn hinges.

7.19.2 Remove the top of the control box cover by unclipplng it from its 4 locating clips (2 each side).

7.19.3 Remove the instrument panel from the control box by unclipping it from its 4 locating pins (2 each side).

7.19.4 Detach the wires by unclipping the connector from the control board (Fig. 79).

7.19.5 Unscrew the lock nut which fastens the potentiometer to the instrument panel (Fig. 78).

7.19.6 Replace in reverse order.

7.20 **TO REMOVE/REPLACE THE MAIN SWITCH (Fig. 82).**

7.20.1 Remove the front panel from the outer casing (sect. 7.3). lower the instrument panel (sect. 7.19. 113).

7.20.2 Detach the wires that connect to the switch make sure that these wires are later reconnected to the same poles (Fig. 94).

7.20.3 Pull the switch out from the instrument panel by pressing the clamp springs.

7.20.4 Replace in reverse order.

7.21 **TO REMOVE/REPLACE THE WATER PRESSURE GAUGE (Fig. 83).**

7.21 .1 **Remove** the casing (sect. 7.3) and lower the instrument panel (sect. 7.19. 1/3).

7.21.2 Close the heating system on/off valves and drain the water from the drain point on the heating system (Fig. 93).

7.21.3 Unscrew the fitting that secures the pressure gauge probe.

7.21.4 Remove the gauge from the instrument panel by pressing its fastening springs.

7.21.5 Replace in reverse order.

7.22 **TO REMOVE/REPLACE THE OVERHEAT THERMOSTAT**

7.22.1 Remove the front panel from the outer casing (sect. 7.3) and lower the instrument panel.

7.22.3 Remove the two wires that connect to the overheat thermostat making sure that these wires will subsequently be reconnected to the same poles (Fig. 94).

7.22.4 Unscrew the plastic cover and locknut that fastens the overheat thermostat and remove It.

7.22.5 Remove the split pin and pull the thermostat sensor from its pocket complete with case sealing grommet.

7.22.6 Remove case sealing grommet from the old thermostat and fit to new one.

7.22.7 Replace in reverse order.

7.23 **TO REMOVE/REPLACE THE ELECTRIC CONTROL BOARD (PCB)**

7.23.1 Remove the casing (sect. 7.3) and lower the instrument panel.

7.23.2 (sect. 7.19.1)

7.23.3 Detach the connectors from the board.

7.23.4 Detach the PCB board from its base by unscrewing the 4 screws.

7.23.5 Replace in reverse order (ensure all electrical connections are made correctly).

7.23.6 Having replaced PCB recommission boiler on heating mode (sect. 6.15).

7.24 **TO REMOVE/REPLACE THE DIFFERENTIAL PRESSURE SWITCH (Fig. 87).**

7.24.1 Remove the casing and the combustion chamber front cover (sect. 7.3 & 4).

7.24.2 Detach the wires that connect to the pressure switch, make sure that these wires are later reconnected to the same poles (Fig. 94).

7.24.3 Unscrew the two screws that fasten the pressure switch to the back of combustion chamber.

7.24.4 Remove the two silicone tubes.

7.24.5 Ensure tubes are connected correctly (Fig. 87) avoiding kinks.

7.24.6 Replace in reverse order ensuring that the - tapping is connected to the tube terminating inside the case and the + tapping is connected to the tube terminating at flue ring (Fig. 87 and 94).

7.25 TO REMOVE/REPLACE THE PUMP (Fig. 88)

7.25.1 Remove the casing (sect. 7.3) and lower the instrument panel (sect. 7.19.1).

7.25.2 Remove lower grill of the casing (sect. 5.4.2 & 5), lower the electric box (sect. 7.16.2 & 3).

7.254 Detach the supply wire.

7.25.5 Unscrew the two hexagonal nuts that fasten the pump to its pipes and remove the pump.

NOTE: It may be necessary to loosen the flow pipe at the heat exchanger to replace the pump gaskets.

7.25.6 Always use new seals when re-fitting new pump.

7.25.7 Replace in reverse order.

Fig. 78

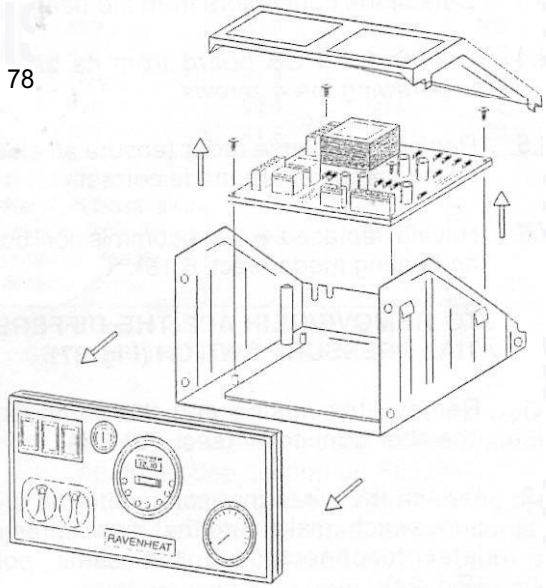

Fig. 79

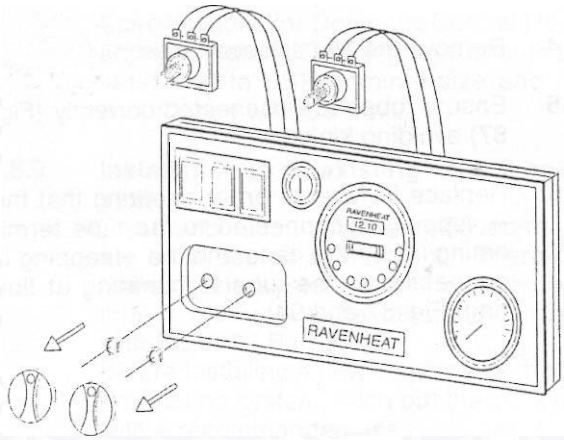

Fig. 81

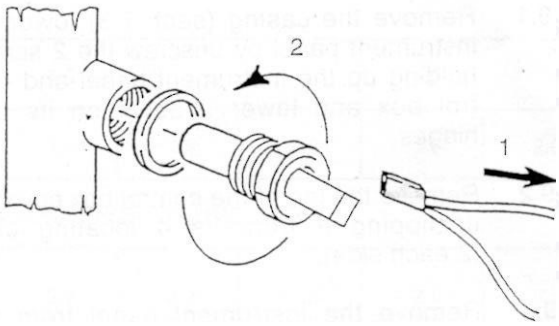

7.25.10 Refill as described in the sect. 6.4 & 5 and check for leaks (see 7.26.2).

7.26 TO REMOVE/REPLACE THE DIVERTER VALVE (Fig. 89)

7.26.1 Remove the casing and lower the instrument panel (sect. 7.3 & 7.19.1).

7.26.2 Close the on/off valves for the heating circuit and the hot water circuit. Drain the boiler at drain point (Fig. 93) and drain hot water from the lowest hot water tap and drain point on DHW inlet cock (Fig. 46).

7.26.4 Unscrew the plate heat exchanger five nuts that connect the diverter valve and pull it out from boiler being careful not to damage the wires.

7.26.5 Pull off circlip securing microswitches to diverter valve.

7.26.7 Detach the wires that are connected to this. Remember that they must subsequently be reconnected to the same terminals (Fig. 94).

7.26.8 Replace in reverse order. Always use new seals.

7.26.9 Fill the boiler as described in (sect. 6.4 & 5) and check for leaks.

7.27 TO REMOVE/REPLACE THE CENTRAL HEATING AND/OR HOT WATER CONTROL THERMISTOR

7.27.1 Remove the casing (sect. 7.3) and lower the instrument panel (sect. 7.19.1 for DHW).

7.27.3 Remove the wires that connect the thermistor (Fig. 81).

7.27.4 Close the on/off valves for the heating circuit and the hot water circuit. Drain the boiler at drain point (Fig. 93) and drain hot water from the lowest hot water tap and drain point on DHW inlet cock (Fig. 46).

7.27.5 Undo the nut and withdraw the sensor (Fig. 81) from its pocket.

7.27.6 Replace in reverse order,

Fig. 82

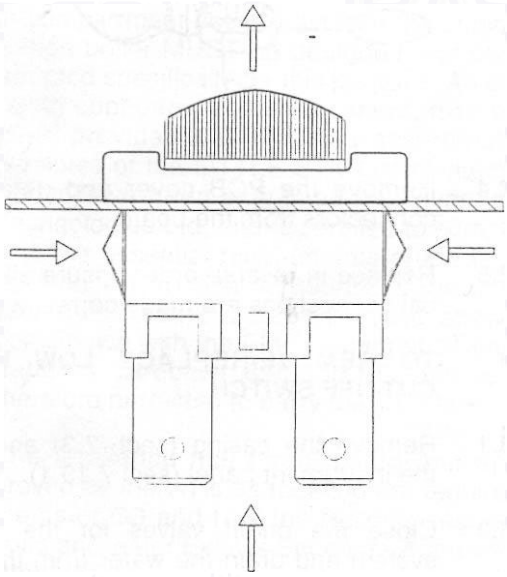

Fig. 83

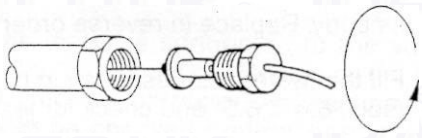

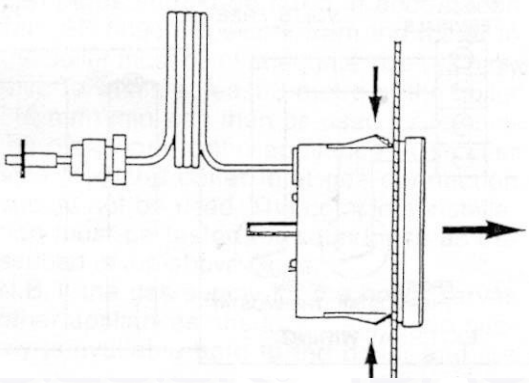

7.28 TO REMOVE/REPLACE THE CENTRAL HEATING EXPANSION VESSEL

In the unlikely event of failure of the central heating expansion vessel It is recommended a suitable expansion vessel be fitted external to the boiler. It should be positioned on the return pipe and as close to the boiler as possible (Fig. 7).
However, if it is necessary to replace the central heating expansion vessel the boiler must be removed from the wall as follows,

7.28.1 Remove the casing (sect. 7.3).

7.28.2 Close the on/off valve on the domestic cold water, central heating and gas supply.

7.28.3 Drain domestic water from the lowest hot waler tap and drain point on DHW inlet cock (Fig. 46).

7.28.4 Drain the boiler (Fig. 93).

7.28.5 Disconnect all pipework connected to boiler.

7.28.7 Disconnect mains cables and any other connections (room thermostat, programming clock).

7.28.8 Remove the duct proceeding in reverse order as described in (sect. 5.5 or 5.7).

7.28.9 Remove the 2 top coach bolts then remove boiler from the wall.

7.28.10 Remove the top bracket, and unscrew the nut that connects the expansion vessel and remove it (Fig. 91).

7.28.12 Remove the expansion vessel.

7.28.13 Replace all the components in reverse order using new seals.

7.28.14 Fill the system as described in the sect. 6 and check for leaks.

7.29 TO REMOVE/REPLACE THE AIR AUTOMATIC VENT (Fig. 92)

7.29.1 Remove the casing and the combustion chamber front cover (sect. 7.3 & 4).

7.29.4 Close the on/off valves for the central heating circuit and drain the water from the boiler drain point (Fig. 93).

7.29.6 Disconnect the unions 1 and 2 (Fig. 92) slightly turn and remove pipe and auto air vent.

7.29.7 Replace in reverse order, using new seals.

7.29.8 Fill the system as described in the sect. 6.4 & 5 and check for leaks.

7.30 TO REMOVE/REPLACE THE PRESSURE RELIEF VALVE (Fig. 93)

7.30.1 Remove the casing (sect. 7.3).

7.30.2 Close the on/off valves for the heating system and drain the water from the drain point (Fig. 93).

7.30.3 Undo the valve from its body, clean or replace. Replace in reverse order.

7.30.4 Fill the system as described in (sect. 6.4 & 6.5) and check for leaks.

7.31 TO REMOVE/REPLACE TIME CLOCK (Fig. 88/A)

7.31.1 Remove the casing (sect. 7.3) and lower the instrument panel (sect. 7.19.1/.3).

7.31.2 Remove control box cover (sect. 7.23.2).

7.31.3 Remove control board (sect. 7.23.2) from panel.

7.31.4 Remove two clips securing the timer.

7.31.5 Carefully remove the four wires connecting timer by pulling spade connectors from timer.

7.31.6 Replace in reverse order (ensure all electrical connections are made correctly) (Fig. 88/A).

7.32 TO REMOVE/REPLACE THE IGNITION BOARD

7.32.1 Remove casing (sect. 7.3).

7.32.2 Remove the screw from the ignition box cover.

7.32.3 Detach the ignition box from its base on the gas valve.

Fig. 87

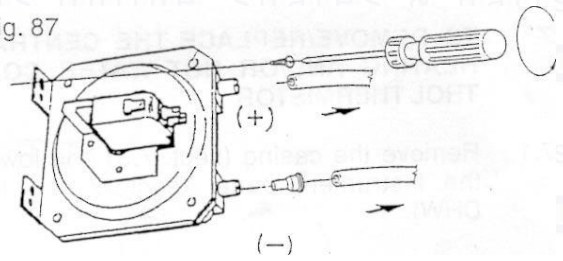

Fig. 88

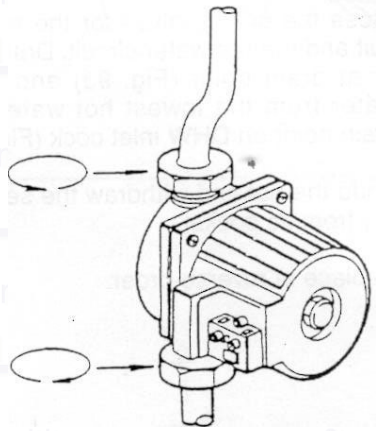

7.32.4 Remove the PCB cover and detach the connectors from the board.

7.32.5 Replace in reverse order ensure all electrical connections are made correctly.

7.33 TO REMOVE/REPLACE LOW WATER CUT-OFF SWITCH

7.33.1 Remove the casing (sect. 7.3) and lower the instrument panel (sect 7.19.1).

7.33.3 Close the on/off valves for the heating system and drain the water from the drain point (sect. 5.4.5).

7.33.4 Pull wire off and unscrew the sensor from its body. Replace in reverse order.

7.33.5 Fill the system as described in the (sect. 6.4 & 6.5) and check for leaks.

Fig. 88/A

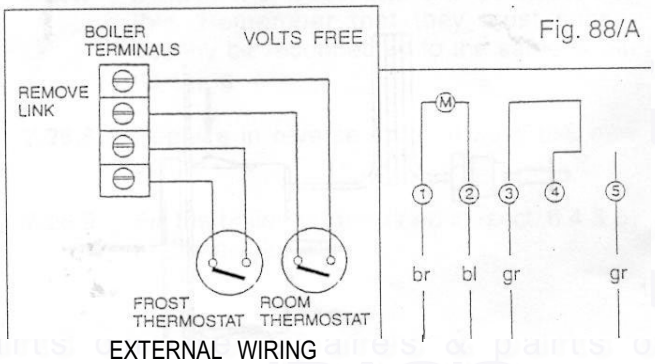

EXTERNAL WIRING

Fig. 89

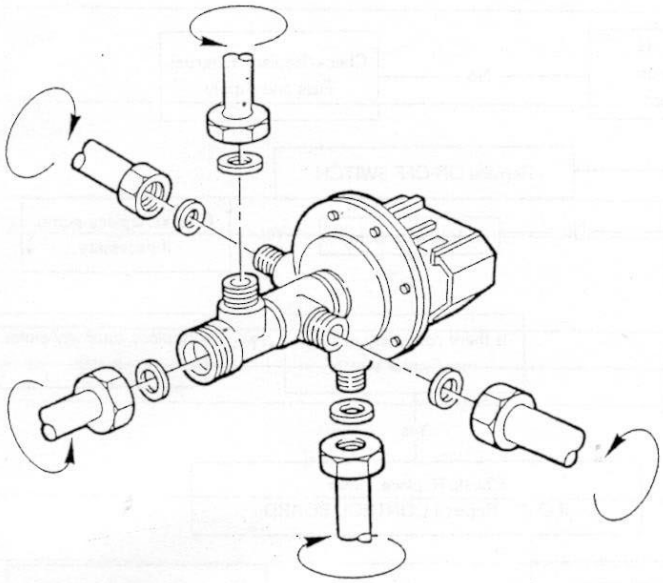

Fig. 92

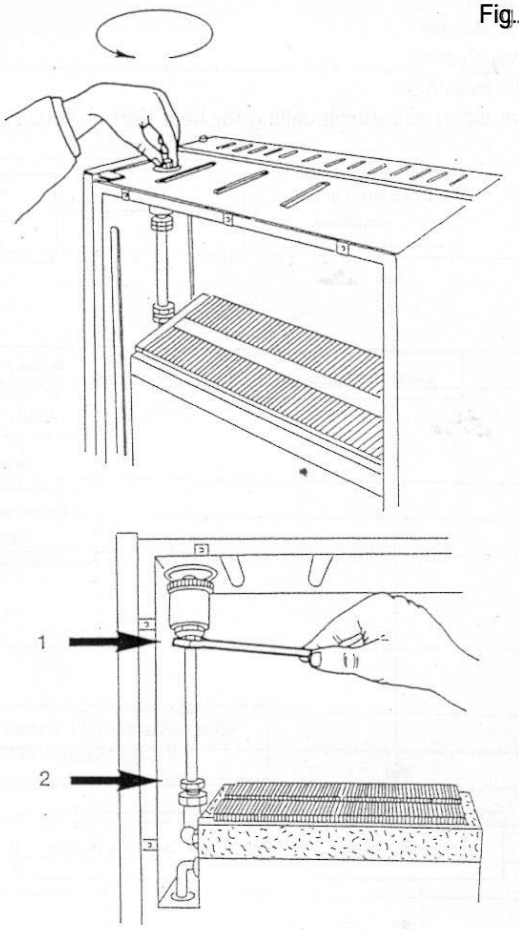

Fig. 91

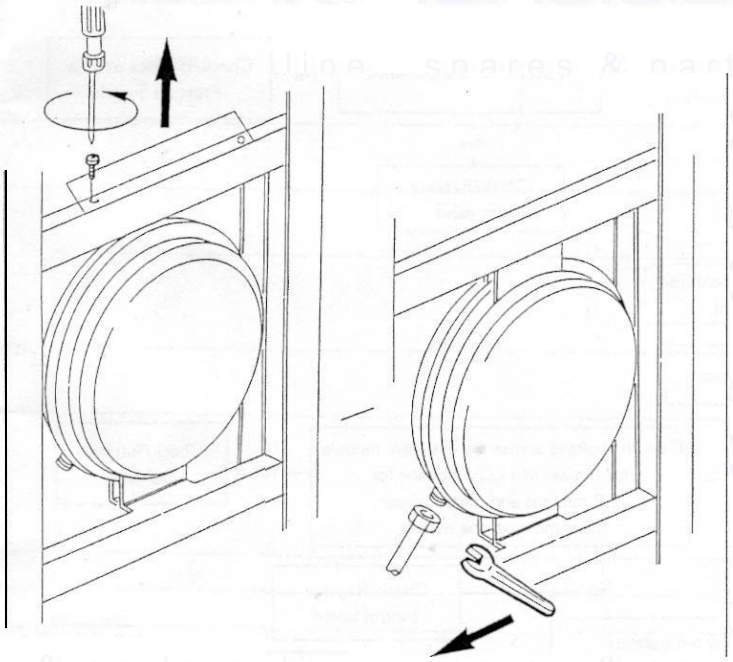

Fig. 93

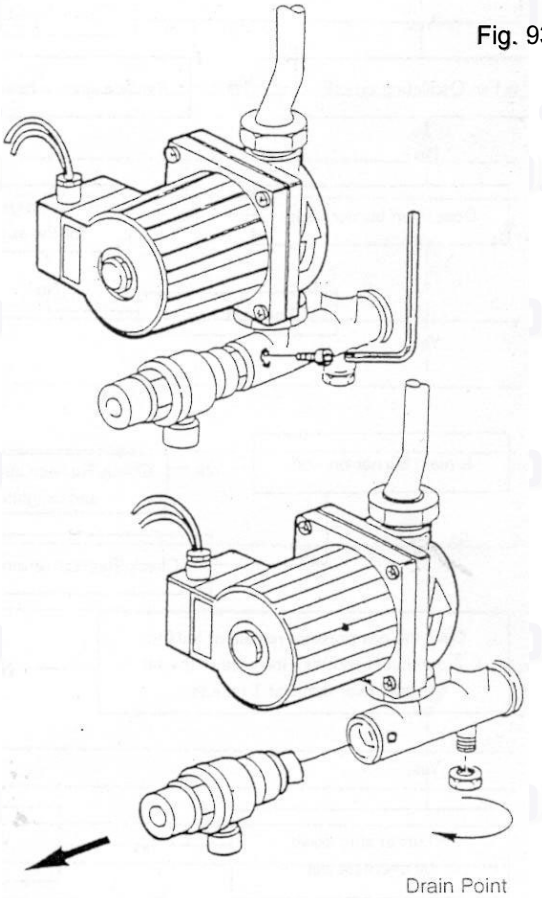

Section 8 FAULT FINDING CENTRAL HEATING

Switch on
Select "winter"
Central Heating
Stat to maximum
Ensure external controls calling for heat (Room Stat/Tune Clock/TRV)

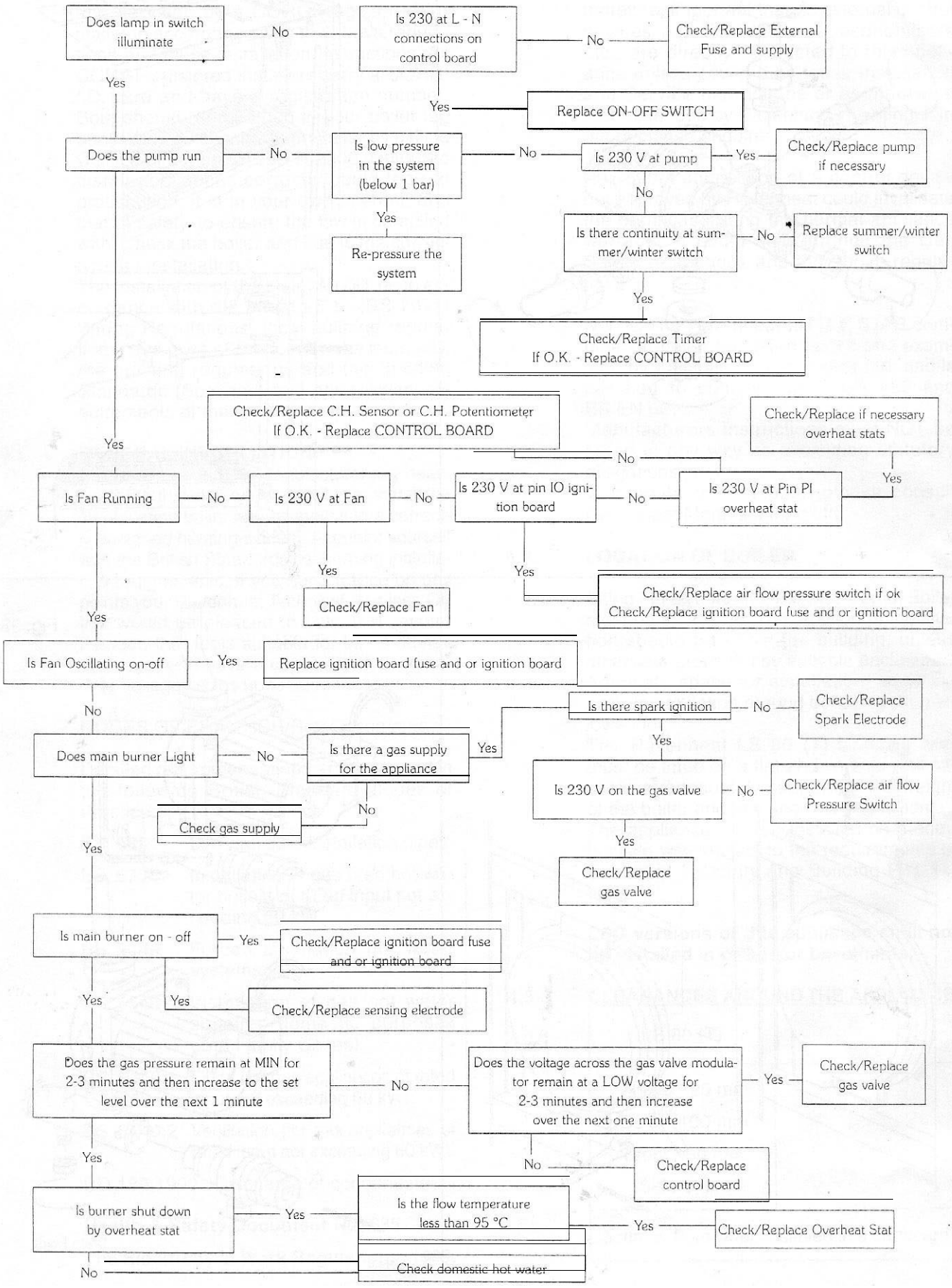

FAULT FINDING DOMESTIC HOT WATER

Before continuing it may be necessary to see Central Heating Fault Finding.
Select only (Summer) Domestic Hot Water.
Open Domestic hot tap close to appliance.

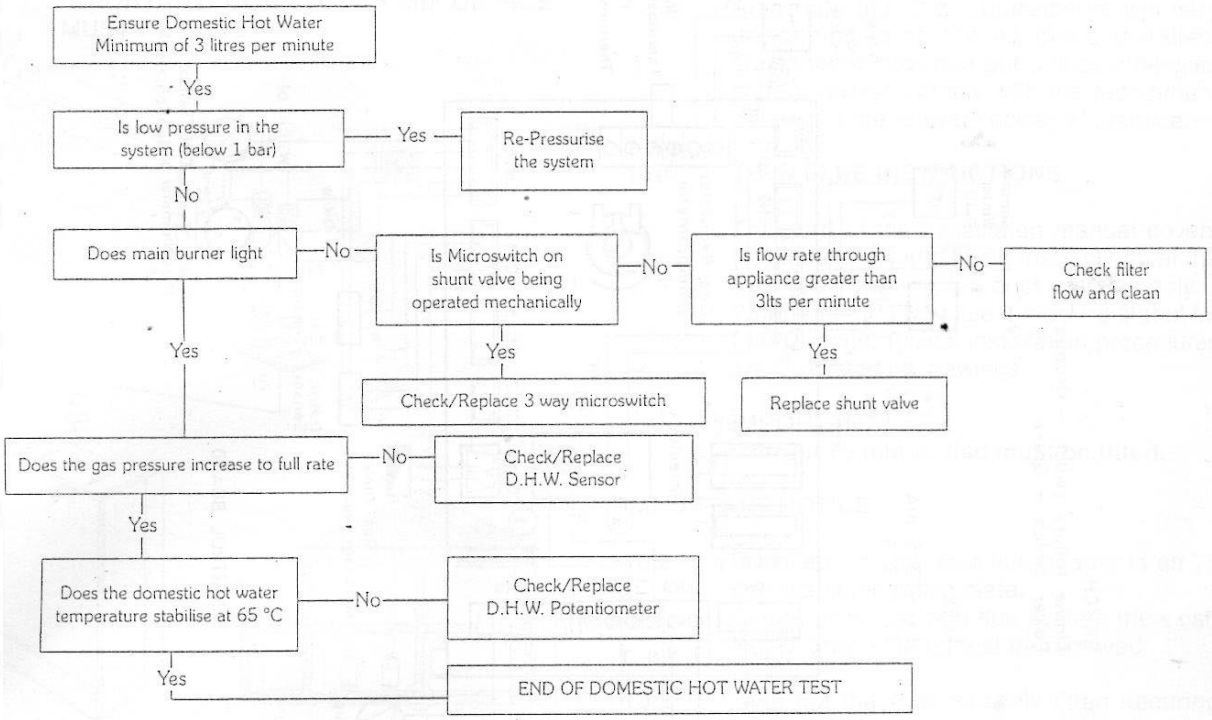

BOILER NOT OPERATIONAL ON TIMER (INTEGRAL)

Switch on/Select "Winter"/Central Heating
Stat to Maximum/Ensure External control calling for heat (Room Stat/TRW

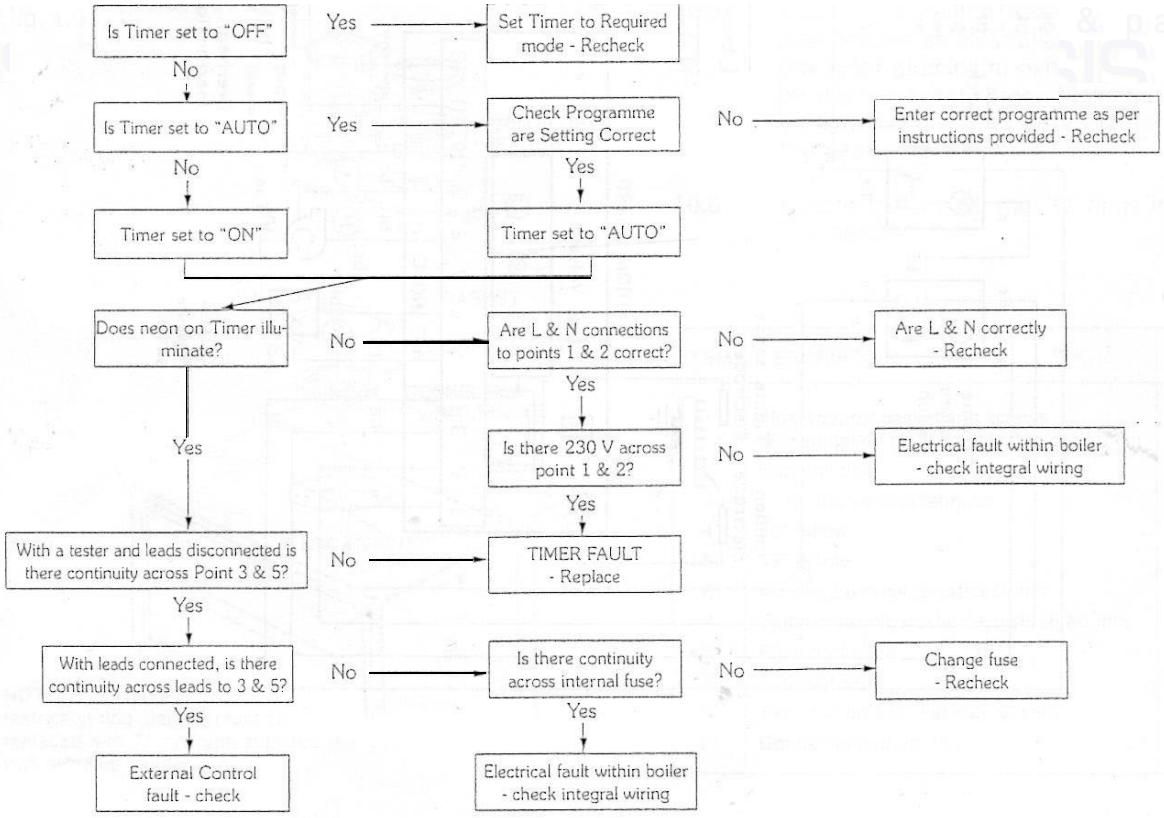

Fig. 94

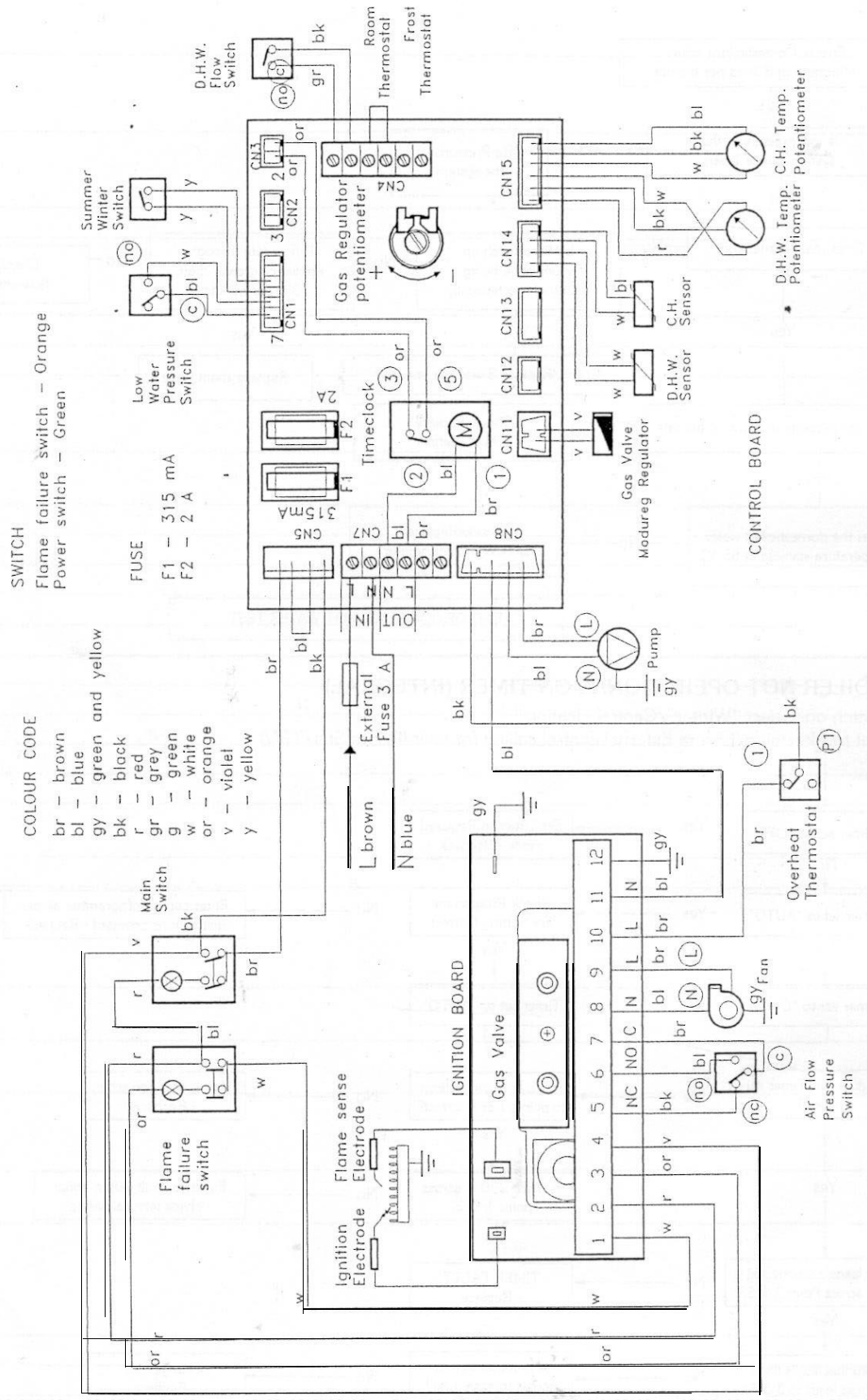
SWITCH
Flame failure switch – Orange
Power switch – Green
FUSE
F1 – 315 mA
F2 – 2 A
COLOUR CODE
br – brown
bl – blue
gy – green and yellow
bk – black
r – red
gr – grey
g – green
w – white
or – orange
v – violet
y – yellow
Main Switch
Flame failure switch
Summer Winter Switch
Low Water Pressure Switch
D.H.W. Flow Switch
Room Thermostat
Frost Thermostat
Gas Regulator potentiometer
Timeclock
External Fuse 3 A
L brown
N blue
IGNITION BOARD
Gas Valve
Flame sense Electrode
Ignition Electrode
Pump
Fan
Overheat Thermostat
Air Flow Pressure Switch
CONTROL BOARD
Gas Valve Modureg Regulator
D.H.W. Sensor
C.H. Sensor
D.H.W. Temp. Potentiometer
C.H. Temp. Potentiometer

10.0 INSTALLATION INSTRUCTIONS FOR TWIN FLUE PIPE (ECCENTRIC FLUE DUCT SYSTEM)

IMPORTANT: CORRECT LS 80 (T) 75 mm (NAT. GAS) - 74 mm (LPG), LS 100 (T) 78 mm (NAT. GAS) - 77 mm (LPG) MUST BE FITTED.

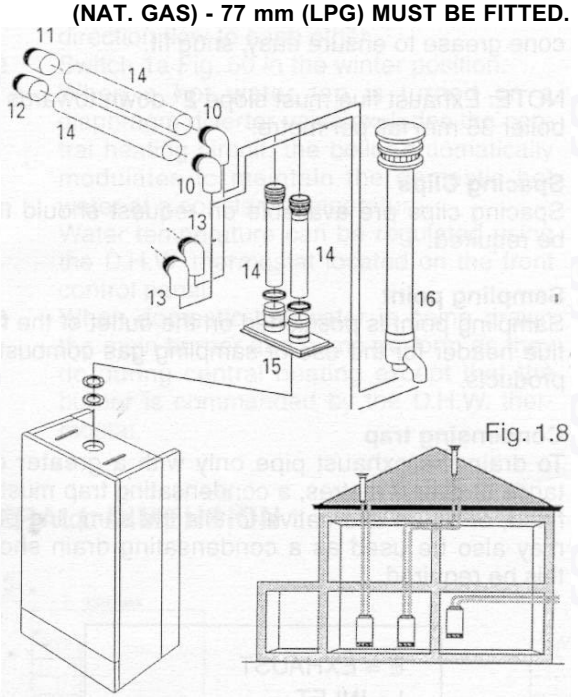

Fig. 1.8

10 - air intake bend 90°	13 - 45° flue exhaust bend
10 - flue exhaust bend 90°	14 - flue exhaust duct
11 - air inlet terminal	14 - air intake duct
12 - flue exhaust terminal	15 - two-way flue gas header
13 - 45° air intake bend	16 - vertical eccentric flue exhaust duct

Fig. 1.9

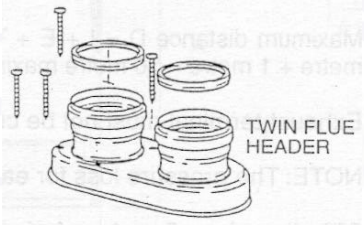

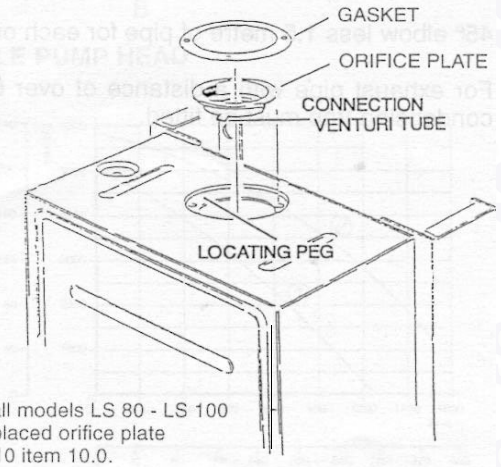

NOTE: on all models LS 80 - LS 100 must be replaced orifice plate as section 10 item 10.0.

IMPORTANT

As with all flues the kits must be installed taking due account of the current issue of BS 5440 parts 1 & 2 and timber frame housing FIEF IGE/UP/7/1998.

Also note that the requirements will vary depending upon the kit being installed. Guidance is provided but unless otherwise stated, always comply with the recommendations of the relevant codes of practice.

10.1 TWIN FLUE INSTRUCTIONS

This part of the installation manual covers the installation and fixing instructions of the twin flue eccentric flue duct systems only. When ordering twin flue it must be stated for LS 80 range. Typical installation procedures are illustrated by drawings.

10.2 Supplied with the twin flue header is an 75 mm diameter orifice plate.
Before fixing the twin flue system the existing 77 LS 80 (T) - 80 LS 100 (T) orifice plate must be removed.

10.3 Take out the 4 temporarily fitted securing screws, lifting our the gasket and orifice plate disconnecting it from the venturi tube. Discard this orifice plate and re-fit the 75 mm orifice plate ensuring that the venturi tube has been refitted, making sure this is securely located into the locating peg.

10.5 Locate the ceiling washer fixing the twin flue header as illustrated making sure that the inner aluminium exhaust locates firmly on the fan outlet spigot. Make sure that the screws are satisfactorily located through the gasket seal.

10.6 Locate the two 80 mm '0' rings in the twin flue header.

ITEM	DESCRIPTION	PART NO.
1	Flue adaptor gasket and screws with sampling point condensing drain	
2	Straight pipe	30005
3	Eccentric vertical terminal	30015
4	90° elbow	30001
5	45° elbow	30003
6	Air inlet terminal (plastic) 80 mm	30009
7	Exhaust terminal (stainless steel) 80 mm	30011
8	Pitch roof slate	
9	Flat roof slate	
10	Twin flue pipe socket seal 80 mm	30007
11	Condensing drain trap	

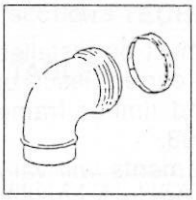

90” M/F bend consisting of:

90” elbow with ‘0’ ring side F
80 mm dia ‘0’ ring

135” M/F bend consisting of:

135” elbow with ‘0’ ring side F
80 mm dia’0’ ring

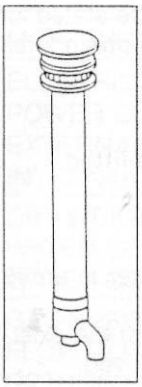

Vertical eccentric flue exhaust duct

Figures 2.8, 3.8 and 4.8 show the versatility of this flue system. Measurements and bends must be calculated correctly so as not to oversize maximum flue lengths.
All spigot ends that are cut must be de-burred with a file.

All located ‘0’ rings must be lubricated with a silicone grease to ensure easy, snug fit.

NOTE: Exhaust flue must slope 2” down towards the boiler 35 mm fall per metre.

spacing Clips
Spacing clips are available on request should they be required.

Sampling point
Sampling point is positioned on the outlet of the twin flue header for the use of sampling gas combustion products.

Condensing trap
To drain the exhaust pipe only with a greater distance of over 6 metres, a condensating trap must be fitted, or as an alternative to this the sampling point may also be used as a condensating drain should this be required.

Fig. 2.8

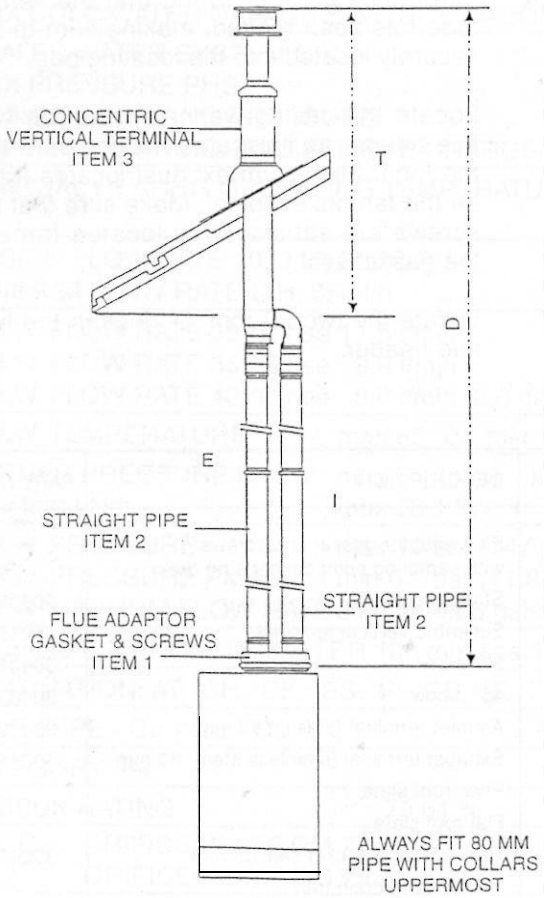

E = EXHAUST
I = INLET
T = TERMINAL
D = DISTANCE (TOTAL)

Exhaust/suction system with concentric pipes for flat or sloping roofs. Extensions with two separate pipes.

Maximum distance D = I + E + T = 14,5 metre + 14,5 metre + 1 metre = 30 metre maximum (pipe + terminal).

Exhaust terminal must not be cut.

NOTE: The pressure loss for each elbow fitted is:

90” elbow less 3 metre of pipe length for each one fitted.

45” elbow less 1.5 metre of pipe for each one fitted.

For exhaust pipe with a distance of over 6 metre a condensing trap must be fitted.

Fig. 3.8

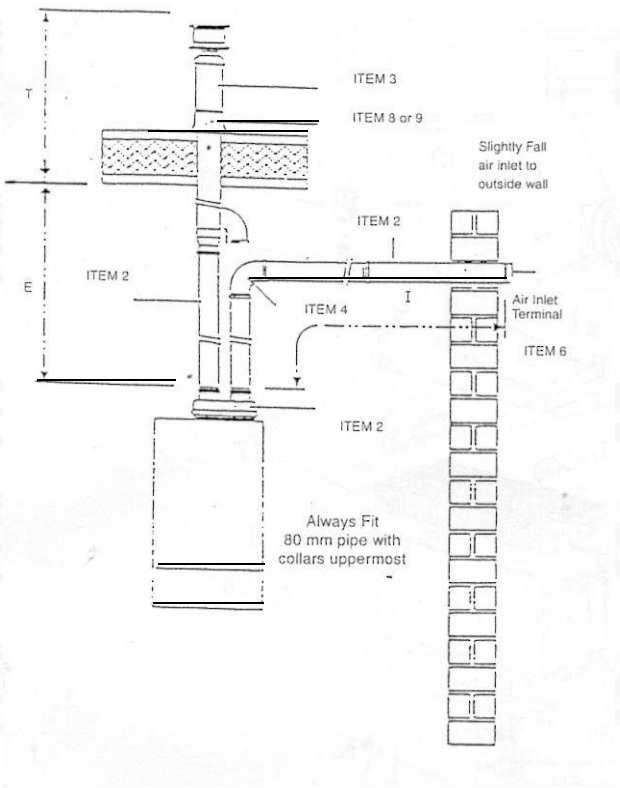

Exhaust/suction system with two separate rated 80 diam pipes - exhaust on flat or sloping roof, suction from vertical wall.

Maximum distance D = I + E + T = Total exhaust/inlet pipe = 27 metre.

Exhaust terminal must not be cut.

Min inlet pipe distance = 0.1 metre.

NOTE: The pressure loss for each elbow is:

90” elbow less 3 metre of pipe length for each one fitted.

45” elbow less 1.5 metre d pipe for each one fitted.

For exhaust pipe with a distance of over 6 metre a condensing trap must be fitted.

Fig. 4.8

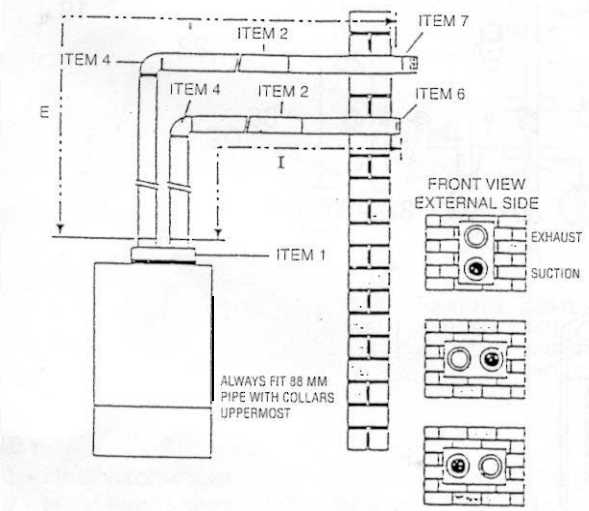

Exhaust/suction system with two separate pipes through a single vertical wall.

Maximum distance D = I + E = Total exhaust/inlet pipe 24 metre.

Min inlet pipe distance 0.1 metre.

Min exhaust pipe distance 0.1 metre.

NOTE: The pressure loss for each elbow fitted is:

90” elbow less 3 metre of pipe length for each one fitted.

45” elbow less 1.5 metre of pipe for each one fitted.

For exhaust pipe with a distance of over 6 metre a condensing trap must be fitted.

SECTION 1 EXPLODED PARTS DIAGRAM

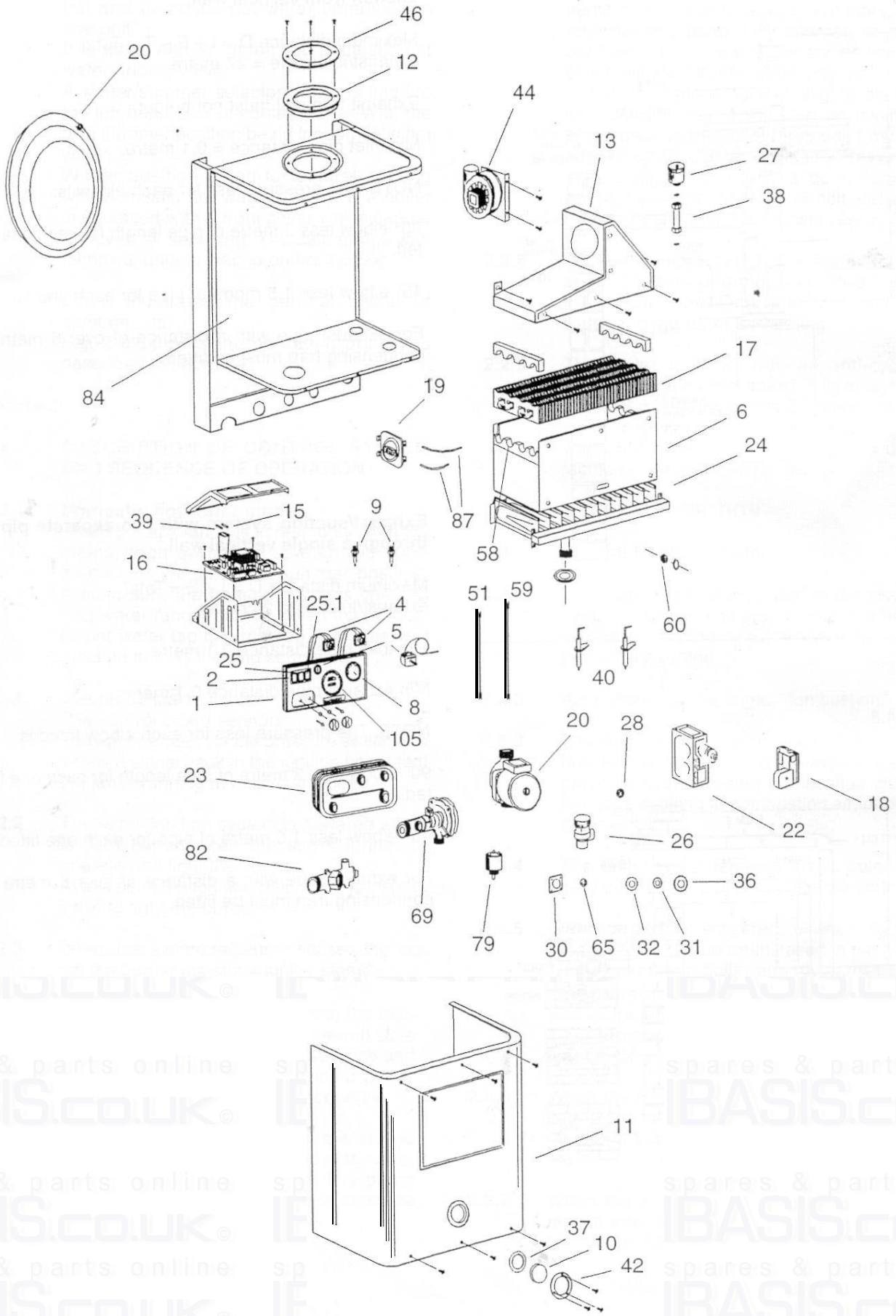

RAVENHEAT SHORT LIST OF SPARE PARTS

Pos.	LS 80 (T) Part. No.	G.C. Part. No.	LS 100 (T) Part. No.	G.C. Part. No	Description
1	0014PAN09005/0		0014PAN09005/0		INSTRUMENT PANEL
2	00121NT0900510		0012INT09005/0		MAIN SWITCH
4	OOI2POT05005/0		0012POT05005/0		D.H.W/C.H. POTENTIMETER
5	0007TER0301010	371267	0007TER03010/0	371267	OVERHEATTHERMOSTAT
6	0001 CAM09005/0		0001CAM10005/0		COMBUSTION CHAMBER
7	0014MAN06015/0		0014MAN06015/0		THERMOSTAT KNOB
a	00061DR0900510		0006IDR09005/0		WATER GAUGE
9	0007TER05005/0		0007TER05005/0		D.H.W/C.H. SENSOR
10	0014VET01005/0	371268	0014VET01005/0	371268	SIGHT GLASS
11	0001 C0P09010/0		0001COP1001/0		CHAMBER COVER
12	0001 DIA09005/0		0001 DIA09005/0		AIR RESTRICTION RING
13	0001 CAP09005/0		0001CAP10005/O		FLUE GAS EXHAUST HOOD
15	5021103	372645	5021103	372845	F2 FUSE 315 mA
16	0012CIR0900510		0012CIR09005/0		PRINTED CONTROL BOARD
17	0002SCA0900510		0002SCA10005/0		HEAT EXCHANGER
18	0012GEN0901010		0012GEN09010/0		PRINTED IGNITION BOARD
19	0005PRE09005/0		0005PRE09005/0		AIR PRESSURE SWITCH
20	0004VASO9010/0		0004VAS0901010		6 LT EXPANSION VESSEL
21	0009CIR0901110		0009CIR09011/O		5 METRE PUMP
22	0008vAL0900510	173100	0008VAL09005/0	173100	GAS VALVE
23	0002SCA0901510		0002SCA09015/0		DHW HEAT EXCHANGER
24	0003BRU09005/0		0003BRU10005/0		MAIN BURNER NATURAL GAS (G 20)
24.1	0003BRU09010/0		0003BRU10010/0		MAIN BURNER LPG (G 31) - (G30)
25	0012INT09010/0		0012INT09010/0		SUMMER/WINTER SWITCH
25.1	0012PUL09005/0		0012PuL09005/0		FLAME FAILURE SWITCH
26	000VAL01018/0		0008VAL01018/0		SAFETY VALVE 3 BAR
27	5015015	372888	5015015	372888	AUTO AIR VENT
28	0014REGOI005/0				WATER FLOW REGULATOR
30	0013GUA0303510	371273	0013GUA03035/0	371273	GASKET 32X32X2 GAS VALVE
31	5018025	372851	5016025	372851	GASKET 18.5X11.5X2
32	5018030	372867	5018030	372867	GASKET 24X15X2

RAVENHEAT SHORT LIST OF SPARE PARTS CONTINUED

POS.	LS 80 (T) Part. No.	G.C. Part. No.	LS 100 (T) Part. No.	G.C. Part. No	Description
36	5018046	378864	5018046	378864	GASKET 30X22X2
37	0013GUA01045/0	371274	0013GUAO1045/0		GASKET 48X42X1
36	0010TVB009055/0		0010TVB009055/0		PIPE TO AIR PURGE
39	0012FUSO5015/0		0012FUS05015/0		F1 INTERNAL FUSE 2 A
40	0012CAN09005/0		0012CAN09005/0		IGNITION SENSING ELECTRODE
44	0012VEN09005/0		0012VEN09005/0		FAN LS 80
46	0014GUA01020/0	371279	0014GUA0102010	371279	FLUE GASKET
51	0012CAVO9010/0		0012CAVO901 O/O		CABLE FOR SPARK ELECTRODE
58	1015PAN09005/0	E02130	1015PAN10005/0		INSULATION PADS SET
59	001ZCAV09005/0		0012CAV09005/0		CABLE FOR SENSING ELECTRODE
60	5212210	372862			NOZZLE 1.35 FOR NAT GAS
60.1	0003UGE01011/0		0003UGE01011/O		NOZZLE 0.75 FOR LP GAS
60.2			0003UGE03005/0	371297	NOZZLE 1.25 FOR NAT GAS
61	5012125	372861	5012125	372861	SEAL FOR NOZZLE
65	5018015	372865	5018015	372865	GASKET IIX5X2
69	0008VAL09010/0	371298	0008VAL09010/0	371298	3 WAY VALVE
79	0005PRE03010/0	371310	0005PRE03010/0	371310	LOW WATER PRESS/SWITCH
82	0011C0L09005/0		0011C0L09005/0		BRASS MANIFOLD
87	5021312	372675	5021312	372875	NYLON TUBES FROM PRESSURE SWITCH
105	TM61 92	371256	TM61 92	371258	DIGITALTIMER

Chartists Way, Morley, Leeds, LS27 9ET.

Telephone: (0113) 252 7007

Tfax: (0113) 238 0229

Ravenheat reserves the right to make changes and improvements in our products which may affect the accuracy of the information contained in this leaflet.

Cod. 0017LIB09005/0 - 02/05/2002