RAVENHEAT®

Instructions for Use Installation and Servicing

To be left with the user

HIGH EFFICIENCY CONDENSING

COMBINATION BOILER

CS 80 (T)

Natural Gas (G20) II_{2H3P} G. C. No. 4758146

LPG (G31) II_{2H3P} G.C. No. 4758147

CS 90 (T)

Natural Gas (G20) II_{2H3P} G. C. No. 4758148

LPG (G31) II_{2H3P} G.C. No. 4758149

Listed by The United Kingdom Water Fitting Byelaws Scheme

benchmark COLLECTIVE MARK

THE MARK OF QUALITY FOR THE INSTALLATION, COMMISSIONING AND SERVICING OF DOMESTIC HEATING AND HOT WATER SYSTEMS

CE 1312

MANUFACTURED TO ISO 9001

SERVICE LISTED BY British Gas

ENERGY EFFICIENCY IT'S CLEVER STUFF

Technical and illustrative data are not binding and can be modified without prior notice.
The descriptions and illustrations in the present booklet are for guidance purposes only.

RAVENHEAT MANUFACTURING LTD
CHARTISTS WAY, MORLEY, LEEDS, U.K. LS27 9ET
TEL.: 0113 252 7007 - FAX: 0113 238 0229
Website: www.ravenheat.co.uk - E-mail: sales@ravenheat.co.uk

HIGH EFFICIENCY CONDENSING BOILER
FOR CENTRAL HEATING AND DOMESTIC HOT WATER

This new highly efficient turbo-modulating boiler is designed to meet domestic hot water and central heating requirements at super high efficiency.

POSITION

The appliance is extremely versatile as it can be fitted in almost any room. The appliance is room sealed so there is no contact between the combustion chamber and living accommodation. This guarantees maximum safety and efficiency. Each boiler has been designed and manufactured in our modern plant to exacting ISO 9001 discipline, all boilers carry full CE marking of approval. Technical sales and commercial services are available throughout the UK Mainland. This product is guaranteed by Ravenheat manufacturing ltd, Chartists Way, Morley, LEEDS, LS27 9ET. Telephone No (0113) 252 7007.

Guarantee is a full 12 months from date of purchase providing the appliance has been fitted in accordance with these instructions and relevant codes of practice.

MAJOR COMPONENTS

- Gas valve.
- Variable head pump suitable for any type of central heating system.
- Burner with flame stabiliser designed to operate under all thermal conditions.
- Unique **condensing heat exchanger** for high thermal flue transfer from gases to water.
- Stainless steel plate heat exchanger for super high heat transfer to domestic hot water supply.
- Built in frost protection.
- Printed circuit board designed to connect to room stat and/or timer.
- Aesthetically pleasing panels and controls.
- On/Off ball valves for shutting off gas, central heating and domestic hot water circuit.
- Safety relief valve (for safety discharge).
- Programmable 7 day module with digital display (time clock version only).

NOTE: Due to the high efficiency of this boiler a plume of water vapour will form at the flue terminal during operation.

COSHH - CONTROL OF SUBSTANCES HAZARDOUS TO HEALTH
IMPORTANT

It is the Users/Installers responsibility to ensure that the necessary personal protective clothing is worn when handling this appliance, and where applicable the pertinent parts that contain any materials that could be interpreted as being injurious to health and safety.

GENERAL INFORMATION:
GLUES AND SEALANTS - exercise caution - if these are still in liquid form.
RAVENHEAT use only high quality material for production of this product, in an effort to protect the environment wherever possible components should be recycled.

WARNING: when installing the appliance, care should be taken to avoid any possibility of injury when handling sheet metal parts.

Users instructions

Sections		Page
1	Users guide	6
1.1	Introduction	6
1.2	Clearances around the appliance	6
1.3	Operating safety checks to protect your appliance (checking the system pressure)	6
1.4	Appliance status indicators	7
1.5	Digital display	8
1.6	Boiler value	8
1.7	Time	8
1.8	Programming the heating times	9
1.9	Diagnostic	9
2	General layout	10
2.1	Operating scheme	11
2.2	Introduction	12
2.3	Description of control system and sequence of operation	12
2.4	Domestic hot water mode	12
2.5	Central heating mode	12
2.6	General function	12
2.7	Overall dimension	13
2.8	Safety device	13
2.9	Available pump head	13
2.10	Pressure drop across appliance	13
3	Technical data WH 80(T) natural gas	14
3.1	Technical data WH 80(T) LPG	15
3.2	Technical data WH 90(T) natural gas	16
3.3	Technical data WH 90(T) LPG	17
4	General requirements	18
4.1	Safety Gas safety (Installation and use)	18
4.2	General information	18
4.3	Location of boiler	19
4.4	Clearances around the appliance	19
4.5	Important notice	19
4.6	Gas supply	19
4.7	Flue system	20
4.8	Air supply	20
4.9	Water circulation (central heating)	20
4.10	Flue terminal position	21
4.11	Pipework	22
4.12	Boiler interlock control	22
4.13	Draining tap	22
4.14	Air release points	23
4.15	Mains water feed: central heating	23
4.16	Permissible methods of filling	23
4.17	Sizing of additional expansion vessel	24
4.18	Installation to an existing central heating system	24
4.19	Water treatment	25
4.20	Hard water areas	25
4.21	Domestic water	25
4.22	Electrical supply	25

Sections		Page
5	Installation	25
5.1	Warning	25
5.2	Delivery	25
5.3	Unpacking of boiler	25
5.4	Positioning of the boiler	25
5.5	Optional extras	26
5.6	Plume management kit	27
5.7	Installing the appliance for rear flue outlet	28
5.8	Installing the appliance for side flue outlet	28
5.9	Completing horizontal flue installation	31
5.10	Intake and exhaust terminal components	31
5.11	In-line flue bend and flue extension	31
5.12	Vertical flue instructions	32
5.13	Installation instructions for twin flue pipe	34
5.14	Twin flue instructions	34
5.15	Exhaust / suction system with concentric pipes for flat or sloping roofs. Extensions with two separate pipes	35
5.16	Exhaust / suction system with two separate rated 80 dia. pipes exhaust on flat or sloping roof, suction from vertical wall	35
5.17	Exhaust / suction system with two separate pipes through a single vertical wall	35
5.18	Installation instructions for 80/125 concentric flue system	36
5.19	Assemble boiler	37
5.20	Fitting valve pack	37
5.21	Gas connection	37
5.22	Central heating connection	37
5.23	Domestic hot water connection	37
5.24	Position of water/gas connections	37
5.25	Safety valve discharge	38
5.26	Condensate drain connection	38
5.27	Converting the appliance to different gas types	39
5.28	Electrical connections	39
5.29	Outdoor sensor	39
6	Commissioning	40
6.1	Gas supply installation	40
6.2	Electrical installation	40
6.3	Initial filling of the system	40
6.4	Setting the heating system design pressure	40
6.5	Filling the hot water system	40
6.6	Lighting the boiler	40
6.8	Check the gas pressure	41
6.9	Combustion check	41
6.10	Checking the flue system	42

Sections		Page
6.11	Checking the heating thermostat	42
6.12	Testing/regulating the D.H.W flow	42
6.13	Keep hot	42
6.14	C.H. high/low temperature	42
6.15	Range rating central heating or/and domestic hot water	43
6.16	Test mode	43
6.17	Instructing the user	43
7	Servicing instructions	44
7.1	Boiler frost protection	44
7.2	To inspect and clean the appliance	45
8	Replacements of parts	45
8.1	General	45
8.2	To remove front panel	45
8.3	To remove left and right panels	46
8.4	To remove/replace spark igniter box	46
8.5	To remove/replace fan	46
8.6	To remove/replace the electrodes	47
8.7	To remove/replace the burner	47
8.8	To remove/replace the heat exchanger	47
8.9	To remove/replace expansion vessel	48
8.10	To remove/replace gas valve	48
8.11	To remove/replace plate heat exchanger	48
8.12	To remove/replace the water pressure transducer	48
8.13	To remove/replace diverter valve motor	49
8.14	To remove/replace C.H. diverter valve	49
8.15	To remove/replace D.H.W. diverter valve mechanism	49
8.16	To remove/replace pump	49
8.17	To remove/replace automatic air vent	49
8.18	To remove/replace safety relief valve	50
8.19	To remove/replace D.H.W. sensor	50
8.20	To remove/replace C.H. flow and return sensors	50
8.21	To remove/replace flue sensor	50
8.22	To clean and remove/replace condensing trap	50
8.23	To remove panel control box	51
8.24	To remove the instrument panel	51
8.25	To remove/replace control board	51
8.26	To remove/replace digital display board	51
8.27	External control connection	51
9	Fault finding Central heating	52
9.1	Fault finding Domestic Hot Water	53
10	Electrical system diagram	54

Sections		Page
11	Spare parts	55
12	Benchmark commissioning checklist details	60
12.1	Analyser check list	65

1 USERS GUIDE

It is the law that all gas appliances are installed by a competent person, in accordance with the gas safety installation and to the current Gas Safety (Installation and Use) Regulations B.S.5440:2-(2000).

All registered installers carry a Gas Safe Register ID card and have a registration number. Both should be recorded in your boiler Log book. You can check your installer's registration at www.gassaferegister.co.uk.

ESCAPE OF GAS
Should a gas leak be suspected, contact your gas supplier without delay.

GAS EMERGENCY NUMBER: 0800111999

Do NOT search for gas leaks with a naked flame.
WARNING: This appliance must be earthed.

1.1 INTRODUCTION

Please carefully read the information given in this booklet to help you gain maximum control from your appliance with minimum trouble and cost.

Your Ravenheat Condensing Low Nox combination boiler has been designed to supply your Central Heating and Domestic Hot Water directly from one unit.
When Central Heating is operating, the circulation will be interrupted when Domestic Hot Water is being drawn off (domestic hot water has priority).
This will normally not affect the level of Heating.

PLEASE NOTE:
Due to the high efficiency of this appliance and resulting low flue gas exhaust temperature a white plume of condensation vapour (cool steam) will be emitted from the flue outlet terminal, this is quite normal. It will be particularly evident during periods of low outdoor temperature or when the boiler is working at its optimum performance (Plume Management kits are available on request).

IMPORTANT:
In the unlikely event of the exhaust flue gases exceeding the overheat temperature setting, the boiler operation will be stopped to prevent damage to the appliance.

1.2 CLEARANCES AROUND THE APPLIANCE

Side clearance:
The position of the appliance must provide a minimum clearance of only 5 mm as the side panels do not require removing for servicing.

However, if the option is preferred to remove the panels then a minimum clearance of 55 mm is required.

Top clearance:
The top clearance should be a minimum of 125 mm.

Bottom clearance:
A minimum bottom clearance of 80 mm is required between the appliance and any surface, though 150 mm is preferred whenever possible.

Front clearance:
A minimum of 450 mm is required in front of the appliance for access during servicing, the front clearance can be reduced when installed in a cupboard to 25 mm from the access door.

USER CONTROLS

This appliance is designed to operate with the minimum of ease for the user. All the controls are found on the control panel on the front of the boiler.

1.3 OPERATING SAFETY CHECKS TO PROTECT YOUR APPLIANCE (CHECKING THE SYSTEM PRESSURE)

Before lighting the appliance check that the Central Heating system pressure is not less than 1 bar. If it is below this it will be ecessary to re-pressurise the system, between 1 and 1.5 bar to allow the boiler to operate. To view the system pressure press the P button once, this will display the current pressure **(if the pressure is on nil or too low, then error code 08E is displayed).**
A filling device (filling loop) will have been fitted on the system.
This is usually on the pipework near to the boiler. If you are unsure of its position, or you cannot identify it, consult the installer who fitted the boiler.
The filling loop usually consists of two taps and a separate silver coloured braided flexible pipe with connection fittings. Only when re-pressurising should the braided flexible pipe be connected between the two taps, ensure that the nuts or the pipe ends are tightened onto the taps.
Fully open one of the taps first and then while monitoring the water pressure on the digital display, carefully open the second tap. When the water pressure is to a maximum of 1.5 bar turn both taps off.
Disconnect the flexible pipe from the taps (a small amount of water may be present).
Keep the pipe in a safe place for future use.
Press the P button once to return to the main screen.

In the event of an error, the appliance will show a sequence code displayed on the digital display of the control panel (fig. 1). By pressing the "RESET" button it is possible to relight the boiler (see page 51 for list of error codes).

1.4 APPLIANCE STATUS INDICATORS

Your boiler is equipped with a large LCD display that indicates the appliance operating status (fig. 1).

After a long period switched off (no power supply), the first switch on the internal backup circuit will charge in order to maintain time and update parameters. The screen will display CLOW, after a few minutes of power supply the display will be charged enough to allow all the functions.

During the initial charge time, the display doesn't allow the visualisation and/or modification function parameters. Instead other functions are working. When the appliance operates in rest mode, the display shows the boiler temperature and, for the time clock version only, the time. Alternatively the digital display also shows the water pressure.

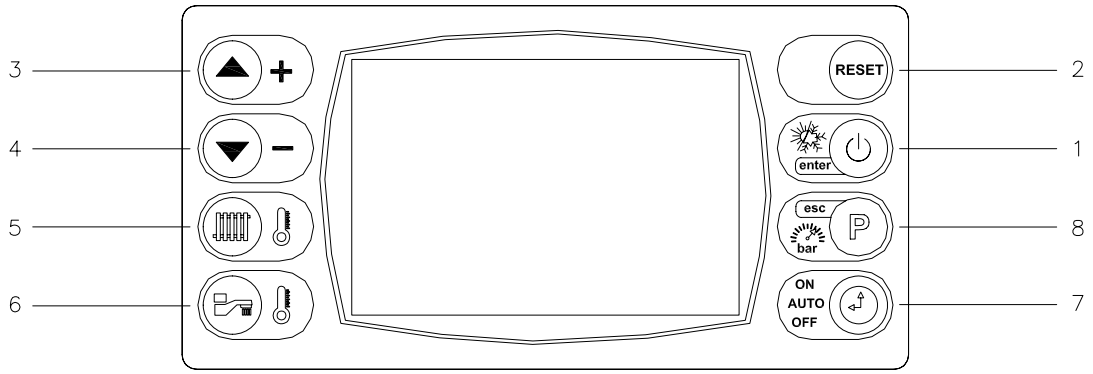

Fig. 1

KEY:

1 - ON/OFF button.
Press to turn the boiler ON, "SUM" (hot water only) "WIN" (hot water and heating if set) and OFF.
Press the button also to confirm selections.

2 - Press to reset the appliance if ever an error code is displayed.

3/4 - Temperature and function mode selectors.
Press the arrow up or the arrow down to increase or decrease the heating or domestic hot water outlet temperature, when the digital display is in hot water or domestic set-point temperature.
Press also to show the boiler values or to show the options program when the digital display is in menu setting.

5 - Press to set the Central Heating Temperature required (when in winter mode).
Press the arrow up or the arrow down buttons to increase or decrease the temperature.

6 - Press to set the Domestic Hot Water Temperature required.
Press the arrow up or the arrow down buttons to increase or decrease the temperature.

7 - TIMER MODE (time clock version only).
Press to select "Auto" (heating times set), "Manual" (heating on all the time) and off (heating off).

8 - Press to show the boiler values.

Use the arrow up and arrow down buttons to select the following information:

PBAR: water pressure
SFAN: speed fan (the display shows 3 digits (e.g. 500 = 5000 rpm)
TFLOW: flow temperature
TRET: return temperature
TDHW: domestic hot water temperature
PWR: % power of modulation.

- Press for 3 seconds to enter into menu.
Use the arrow up or arrow down buttons to select the following options:

- TIME (time clock version only): It is possible to set the time and the current day (Monday 1, Tuesday 2, Wednesday 3, Thursday 4, Friday 5, Saturday 6, Sunday 7), see section 1.7.
- PTMR (only time clock version): It is possible to set the timer, see section 1.8.
- BOIL: It is possible to set the boiler parameters
  C.H. max fan speed
  D.H.W. max fan speed
  Keep hot: "0" disabled and "1" enabled
  C.H. High/Low temperature: "1" high/"2" low.

1.5 DIGITAL DISPLAY

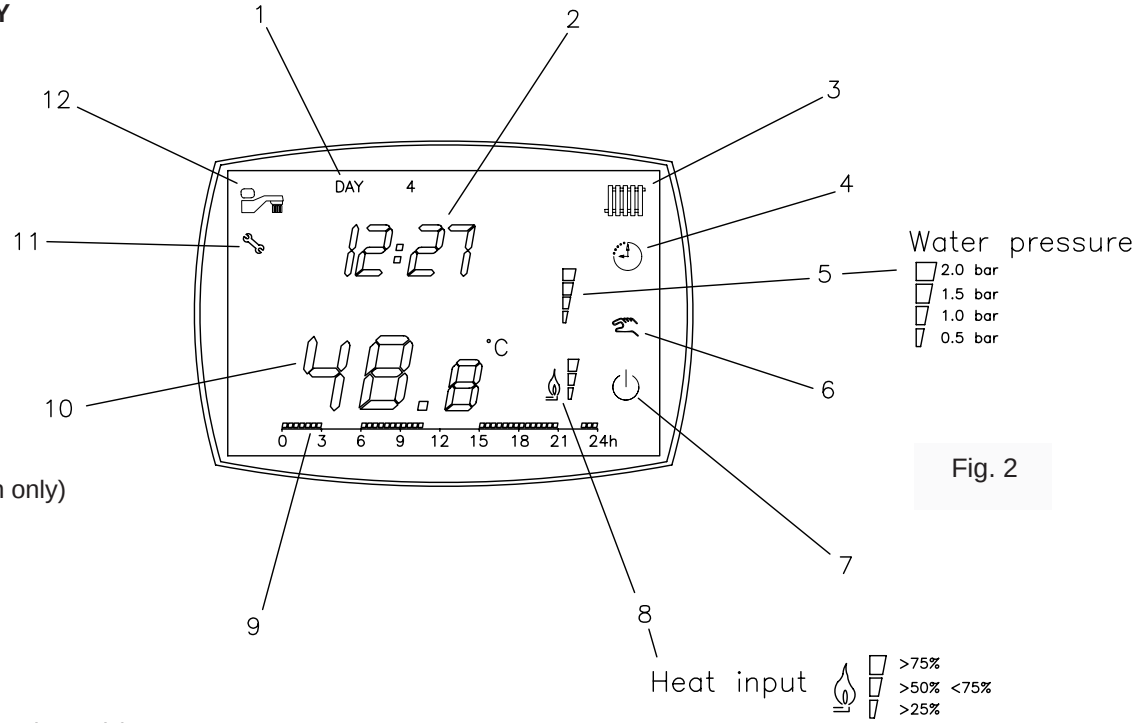

Fig. 2

KEY

1 - Day indicator:
(time clock version only)
1. Monday
2. Tuesday
3. Wednesday
4. Thursday
5. Friday
6. Saturday
7. Sunday

2 - Time (time clock version only).

3 - Central Heating: when the appliance is in central heating mode icon 3 will be flashing.

4 - Auto (time clock version only): when the digital clock is in automatic function icon 4 is displayed.

5 - Water pressure: Shows the current pressure in the system.

6 - Manual: When the digital timer is set to manual icon 6 is displayed, in this mode the central heating is on permanently.

7 - ON/OFF: When the appliance is ON icon 7 is displayed.

8 - Modulation flame level: When the burner is lit, 3 different levels on icon 8 are displayed.

9 - Day function (time clock version only).

10 - Temperature.

11 - Anomaly - Lock - out - Test function.

12 - Domestic hot water: when the appliance is in domestic hot water mode the icon will flash.

1.6 BOILER VALUE

It is possible to show the boiler value. Press P button to show the boiler value. Use the arrow up and the arrow down buttons, (item 3 and 4 fig. 1) to show the following info:

PBAR: water pressure
SFAN: speed fan
TFlow: flow temperature
TRet: return temperature
TDHW: domestic hot water temperature
PWR: % power of modulation.

1.7 TIME (time clock version only)

SETTING THE TIME AND DAY (time clock version only):

1. Press and hold the P button for 4 seconds.
2. Press the up and down arrows to select “TIME” and then press the enter button.
3. Press the up and down arrows to select the current hour (24h). Then press the enter button.
4. Press the up and down arrows to select the current minute and then press the enter button.
5. Press the up and down arrows to select the current day (1=Mon, 2= Tue etc.) and then press the enter button.
The time is now set.

1.8 PROGRAMMING THE HEATING TIMES (time clock version only)

The appliance incorporates a digital clock programmed with a default heating pattern (see table 1); however this can be modified to suit individual needs.

To change the programmed times:

1. Press and hold the P button for 3 seconds.
2. Press the up and down arrows to select "P TMR" and then press the enter button.
3. Press the up and down arrows to select the individual day you wish to set, or select the group of days (see table 2) then press the enter button.
4. Press the up and down arrows to select the ON1 time (first on time) and press the enter button.
5. Press the up and down arrows to set the OF1 time (first off) and press enter. Repeat this process for the remaining 3 settings. (Note: if not all 4 times are required then set the remaining on and off times to 24.00, this cancels the remaining on and off. For example see the weekend settings in (table 1.)

Once the times are set, press the P button and this will return to the main screen.

NB: If setting the times in a group, the days in the group will all be the same, however days not in this group will remain at the default time. For example, setting Mon-Sat will change all these days but Sunday will remain the same as table one unless changed individually.

The programmed times will only be activated when the boiler is in winter mode (section 1.4 key 1) and also set in auto mode (section 1.4 key 7). If you wish to override these times, press the timer mode button to select "MAN", this puts the boiler in manual mode which overrides the timer on the boiler so the heating is on permanently (providing any external controls fitted are calling for heat). To turn the heating off, press the timer mode button to select off, this will now turn the heating off permanently until either auto or manual is selected.

TABLE 1

			Manufacturer's value							
			On 1	Off 1	On 2	Off 2	On 3	Off 3	On 4	Off 4
MON	DAY 1	(Monday)	6:30	8:00	11:00	13:00	17:00	23:00	24:00	24:00
TUE	DAY 2	(Tuesday)	6:30	8:00	11:00	13:00	17:00	23:00	24:00	24:00
WED	DAY 3	(Wednesday)	6:30	8:00	11:00	13:00	17:00	23:00	24:00	24:00
THU	DAY 4	(Thursday)	6:30	8:00	11:00	13:00	17:00	23:00	24:00	24:00
FRI	DAY 5	(Friday)	6:30	8:00	11:00	13:00	17:00	23:00	24:00	24:00
SAT	DAY 6	(Saturday)	7:00	23:00	24:00	24:00	24:00	24:00	24:00	24:00
SUN	DAY 7	(Sunday)	7:00	23:00	24:00	24:00	24:00	24:00	24:00	24:00

TABLE 2

Group MO–SU	Day 1,2,3,4,5,6,7	From Monday to Sunday
Group MO–SA	Day 1,2,3,4,5,6	From Monday to Saturday
Group SA–SU	Day 6,7	From Saturday to Sunday
Group MO–FR	Day 1,2,3,4,5	From Monday to Friday

1.9 DIAGNOSTIC

The display shows eventual error or faulty message.

Stop boiler: The boiler stops the operating cycle and waits for the disappearance of the cause of the error in order to go back to be operating mode.

Block boiler: The boiler requires a manual reset to become operational again.

2.0 GENERAL LAYOUT (Fig. 3)

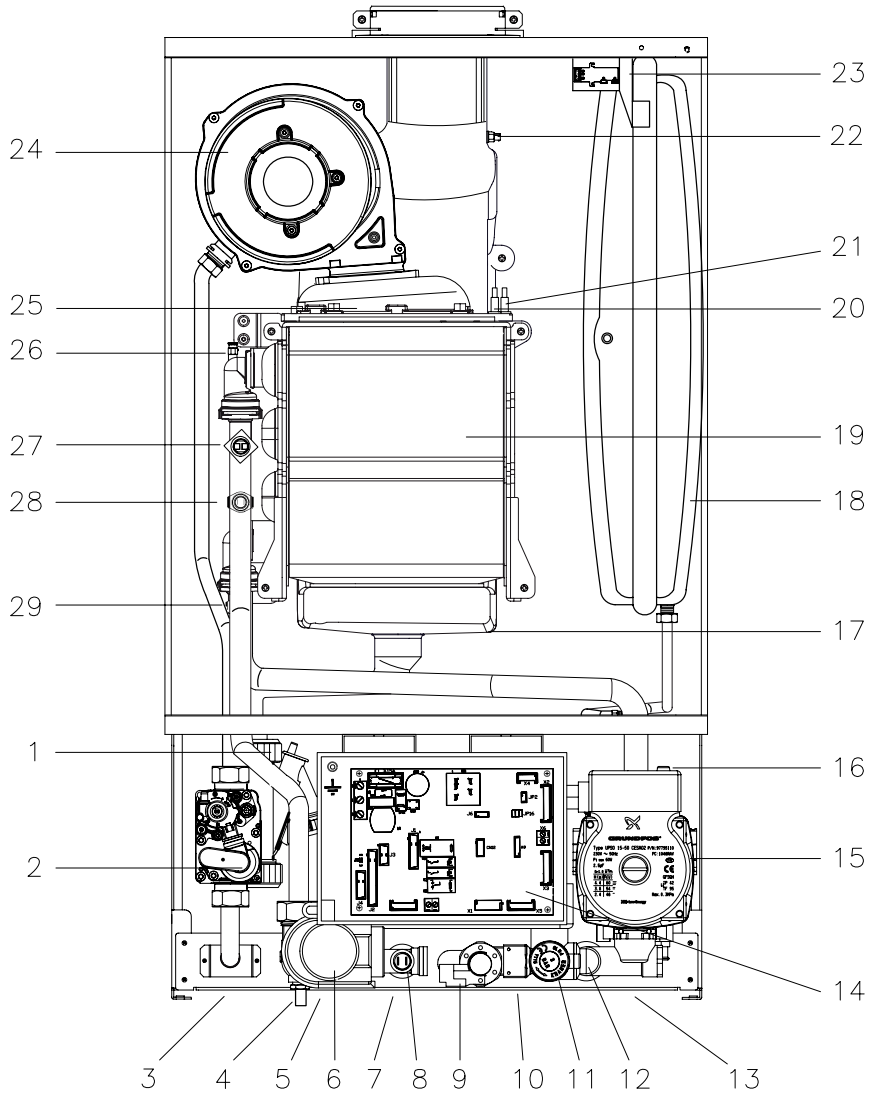

Fig. 3

KEY

1 - Condensate trap
2 - Gas valve
3 - Gas inlet
4 - Drain point
5 - CH flow
6 - Diverter valve motor
7 - DHW outlet
8 - DHW sensor
9 - DHW flow detector
10 - DHW inlet
11 - Safety pressure relief valve
12-Water pressure transducer
13 - CH return
14 - Control board
15 - Circulation pump
16 - Automatic air vent
17 - Condensate drain
18 - Expansion vessel
19 - Main heat exchanger
20 - Spark electrode
21 - Sensing electrode
22 - Flue temperature sensor
23 - Spark igniter
24 - Fan
25 - Burner
26 - Manual air vent
27 - Overheat cut off thermostat
28 - CH flow sensor
29 - CH return sensor

2.1 OPERATING SCHEME (Fig. 4)

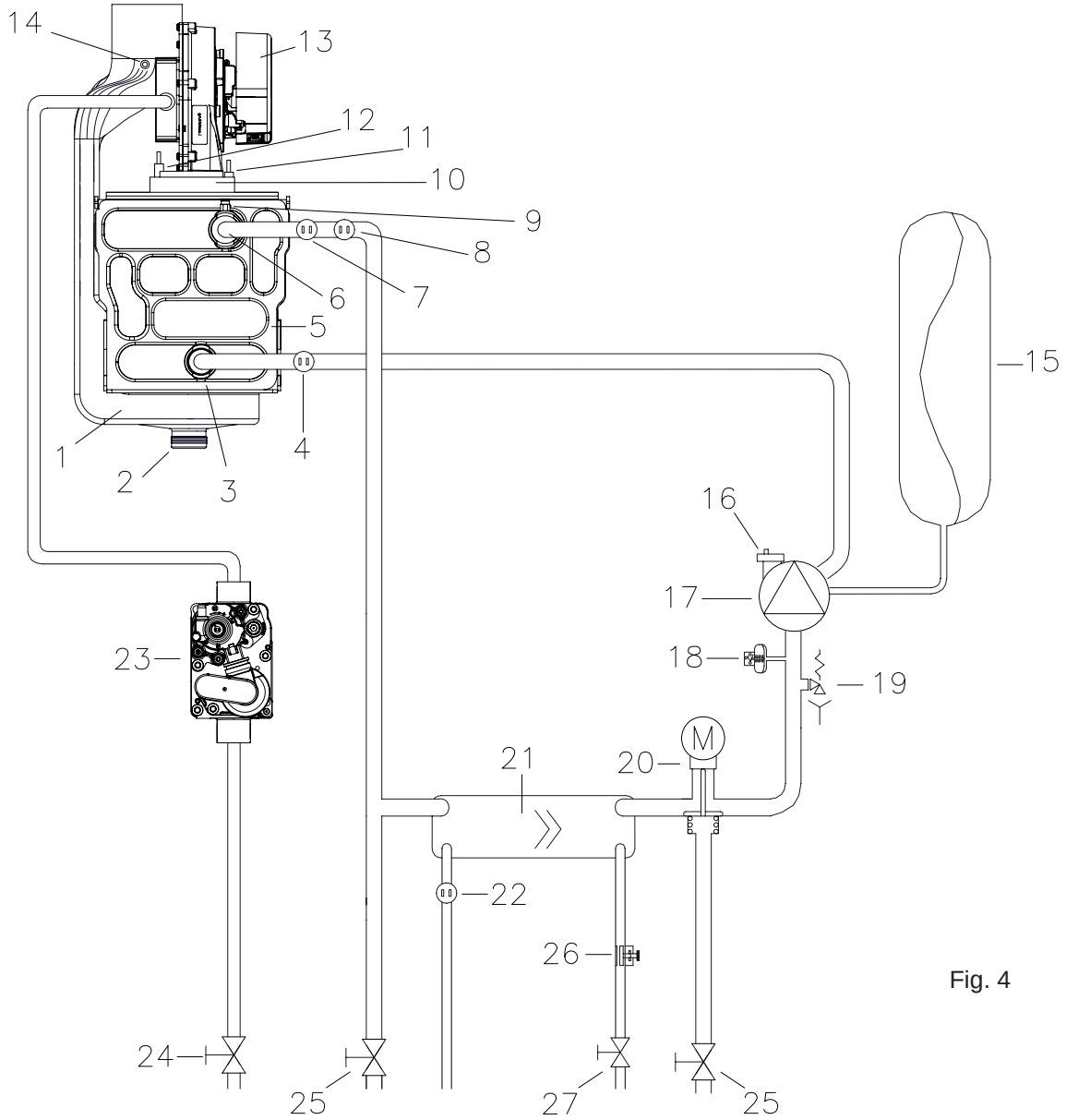

Fig. 4

KEY

1 - Flue exhaust manifold
2 - Condensate drain
3 - CH return
4 - CH return sensor
5 - Heat exchanger
6 - CH flow
7 - Overheat cut off thermostat
8 - CH flow sensor
9 - Manual air vent
10 - Burner
11 - Spark electrode
12 - Sensor electrode
13 - Fan
14 - Flue temperature sensor
15 - Expansion vessel
16 - Automatic air vent
17 - Circulation pump
18 - Water pressure transducer
19 - Safety pressure relief valve
20 - Diverter valve motor
21 - Plate heat exchanger
22 - DHW sensor
23 - Gas valve
24 - Gas service cock
25 - CH compression ball valves
26 - DHW flow sensor
27 - DHW compression ball valves

2.2 INTRODUCTION

This boiler is designed for the production of central heating and domestic hot water combined in one unit.
It is fitted with an automatic domestic hot water priority valve.
It is possible to select either a summer or winter function.
With the summer position only being for domestic hot water.
The winter position being for central heating with domestic hot water priority.

2.3 DESCRIPTION OF CONTROL SYSTEM AND SEQUENCE OF OPERATION

2.4 Domestic hot water mode

When the appliance is in rest mode, select the summer position by pressing the ON/OFF button (item 1 fig. 1) please ensure that the heating circuit is charged with water (above 1 bar).
If the domestic hot water tap is turned on the boiler will function in the following sequence:

The pump starts. The fan starts and sends a signal back to the ignition board that the fan is running.

The spark ignition system is powered which in turn commences the spark igniter to operate and light the burner.
At this point the ignition board opens the gas valve to light the burner.

When the electrode sensor senses the signal that the burner is alight, the spark igniter stops.

The fan speed settings on the boiler increases to the maximum permissible speed over a period of 5 seconds and will remain at its maximum required power until its maximum regulated temperature is achieved and then will modulate to maintain this.

When the domestic hot water tap is closed the diverter valve goes back into rest mode, the burner is shut down along with the fan which is also switched off.

2.5 Central heating mode

If the appliance is in winter mode with a demand for heat to supply radiators, etc. , with the heating circuit fully charged above 1 bar, so as to operate the low water sensor device the boiler will start in the same way as domestic hot water mode.

As the heating sensor reaches temperature the fan speed modulates to maintain the temperature set on the display panel.
When starting, the fan will always start at the set-point speed.

The boiler is fitted with an anti-cycling device on the control board. This delays the boiler from re-firing within 10 minutes.
If the heating temperature goes 20 °C below the set point, the burner restarts immediately.
The domestic hot water will always take priority and is unaffected by the anti-cycling device.

2.6 GENERAL FUNCTION

The instrument panel permits regulation of the boiler to partial heating requirements, between maximum and minimum settings.

Air and gas are drawn by the fan for combustion.

The fan also forces exhaust gas through the flue to the outside, this creates a lesser pressure in the sealed combustion chamber, thus sucking in combustion air, through the inlet duct.

The boiler water temperature is automatically controlled by a built in thermostat.

Interior space temperature is set by the room thermostat to be installed in the heating system. The boiler already carries connection terminals for this thermostat, as well as for a external timer if required. The burner continues to operate until it is stopped by the digital clock or one of the thermostats.

When the internal C.H. temperature sensor or the room thermostat intervenes the burner shuts down. The fan stops but the pump continues to operate for 3 minutes.

The boiler also incorporates an anti-block system which powers the pump every 24 hours, allowing it to operate for 2 minutes if the boiler has not been in use. This operation may in some cases be heard for a short period when the pump has been activated.

The heat exchanger in the D.H.W. circuit is a stainless steel plate heat exchanger water to water, and domestic water is heated by converting the water in the central heating circuit. The transfer of heat is very high because the two fluids move in a counter direction.
Select the winter position by summer/winter button (item 1 fig. 1).

When a hot water tap is turned on the diverter valve motor moves to exclude the central heating circuit, the boiler automatically modulates to maintain the domestic hot water at a constant temperature.
The water temperature can be regulated by the digital display.

When domestic hot water is being drawn off the burner and pump perform as they do during central heating except that the burner is commanded by the D.H.W. thermostat.

When D.H.W. is no longer called for (tap is turned off), the boiler will automatically return to the central heating mode.
Select the summer position by pressing the summer/winter button. The boiler functions like an automatic gas hot water heater.
When D.H.W. is no longer required the burner and pump and fan will immediately turn off.

This also takes place when in winter mode, if there is no demand for heat to the central heating system or until the digital clock and room thermostat (if fitted) demands the central heating circuit.

2.8 SAFETY DEVICE

In both central heating and domestic hot water mode safe operation is ensured by a control board which shuts off the main burner, if the fan stops or the flue or combustion air intake duct is obstructed.

An overheat cut off thermostat acts to turn off the burner to resettable “lockout”.
A safety valve is fitted on the central heating circuit set at 3 bar.
A low water pressure switch set at 0.4 bar is fitted on heating circuit, to prevent the boiler operating below this boiler system pressure.

2.7 OVERALL DIMENSION (Fig. 5)

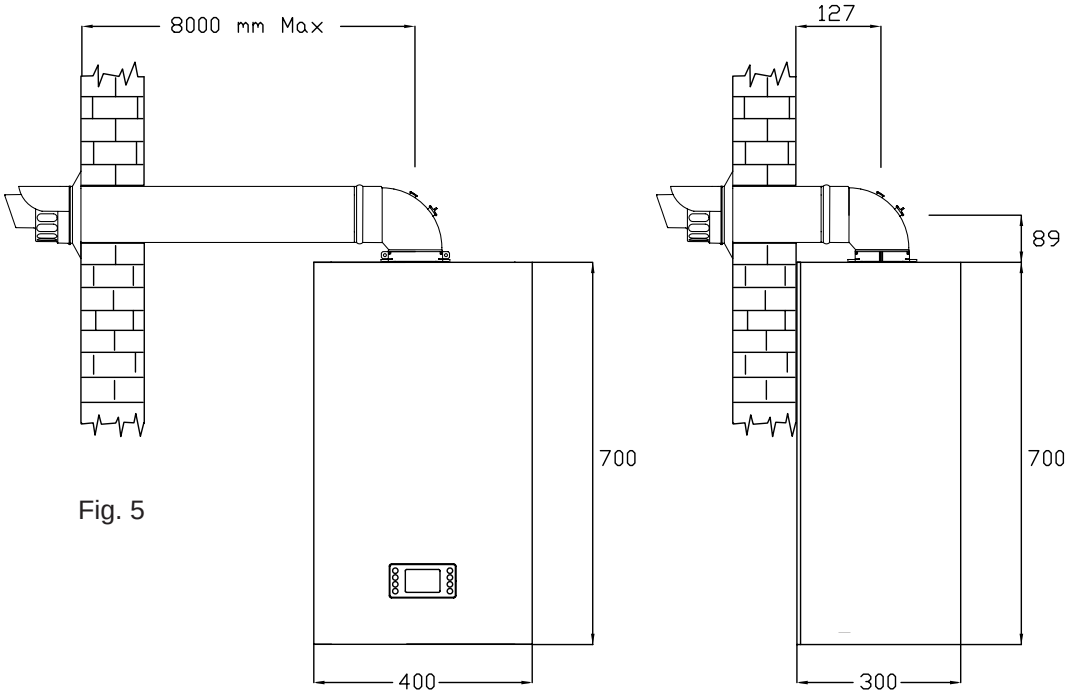

Fig. 5

2.9 AVAILABLE PUMP HEAD (Fig. 6)

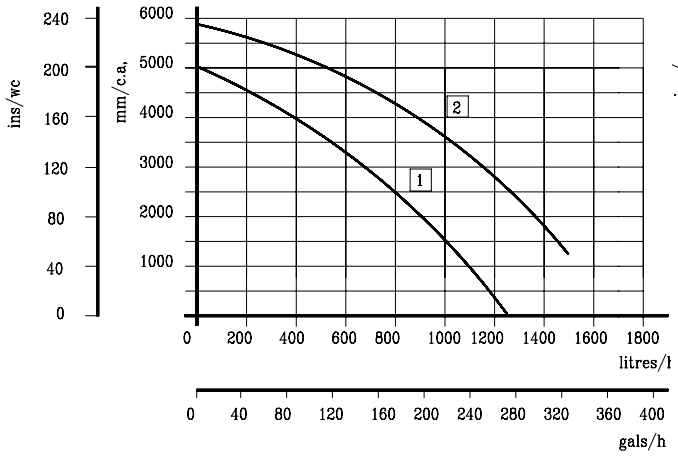

2.10 PRESSURE DROP ACROSS APPLIANCE (Fig. 7)

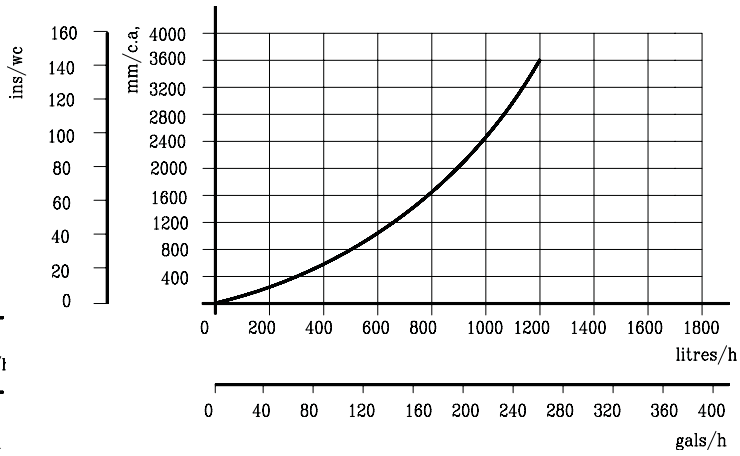

CS 80 (T)

TABLE 3/A

NATURAL GAS (G 20) Π_{2H3P}

NOMINAL HEAT INPUT NET QMS	20.0 kW	
MINIMUM HEAT INPUT NET	3.7 kW	
NOMINAL HEAT OUTPUT	19.5 kW	
NOMINAL HEAT OUTPUT CONDENSING	21.4 kW	
MINIMUM HEAT OUTPUT	3.6 kW	
MINIMUM HEAT OUTPUT CONDENSING	4.0 kW	
GAS RATE	max	2.1 m^3/h
AFTER 10 MINUTES	min	0.4 m^3/h
INLET PRESSURE	20 mbar	
FAN SPEED Max 4200 rpm - 140 Hz	Combustion % CO_2 :	9.0 (+ 0.5 / - 0.5) Case ON
C.H. min 1300 rpm - 43 Hz		9.0 (+ 0.5 / - 0.5) Case OFF
ELECTRICAL SUPPLY	230 V ~ 50 HZ	
POWER CONSUMPTION	110 W	
EXTERNAL FUSE RATING	3A	
INTERNAL FUSE	F1 - 3.15 A (20 mm to BS 4265)	
DRY WEIGHT	28 kg	
WATER CONTENT C.H.	0.8 litre	
WATER CONTENT	0.2 litre	
GAS SUPPLY CONNECTION	15 mm compression isolating valve	
FLOW CONNECTION C.H.	22 mm compression isolating valve	
RETURN CONNECTION C.H.	22 mm compression isolating valve	
INLET CONNECTION D.H.W.	15 mm compression isolating valve	
OUTLET CONNECTION D.H.W.	15 mm compression valve	
SAFETY DISCHARGE C.H.	15 mm copper pipe	
CONDENSATION DRAIN	3/4” (21.5 mm) push fit over flow	
MAX COLD WATER CAPACITY WITHOUT ADDITIONAL EXPANSION VESSEL 110 LITRE		
SEALED WATER SYSTEM C.H.		
MAX PRESSURE PHS	2.5 bar	
MINIMUM WORKING PRESSURE	0.5 bar	
7 LITRES EXPANSION VESSEL PRE-CHARGE-PRESSURE	0.5 bar	
CENTRAL HEATING OPERATING TEMPERATURE	MAX 80 °C	min 35 °C
DESIGN FLOW RATE 1066 l/h 20 °C RISE		
MINIMUM FLOW RATE C.H. 350 l/h		
D.H.W. FLOW RATE 30 °C rise	11.9 l/min	
D.H.W. FLOW RATE 35 °C rise	10.2 l/min	
D.H.W. FLOW RATE 40 °C rise	8.9 l/min	10°C inlet temperature
D.H.W. TEMPERATURE	Max 60 °C	min 35 °C
FAN SPEED D.H.W.	Max 4800 rpm - 160 Hz	min 1300 rpm - 43 Hz
Qmw Input Net	Max 25.4 kW	min 3.7 kW
D.H.W. PRESSURE PMW	Max 6.5 bar	
D.H.W. PRESSURE PMW	min 0.5 bar	
D.H.W. MINIMUM FLOW RATE	2.5 l/min	
FLUE OUTLET NOM. DIAMETER 100 mm specially supplied with boilers (If required)		
DESTINATION: GB, IE	CATEGORY II_{2H3P}	
FLUE TYPE - C_{13} - C_{33} - C_{53}	NO_X 5	SEDBUK A IP X4 D

3.1 TECHNICAL DATA

CS 80 (T)

TABLE 3/B

LPG (G 31) Π_{2H3P}

NOMINAL HEAT INPUT NET QMS	20.0 kW	
MINIMUM HEAT INPUT NET	3.7 kW	
NOMINAL HEAT OUTPUT	19.5 kW	
NOMINAL HEAT OUTPUT CONDENSING	21.4 kW	
MINIMUM HEAT OUTPUT	3.6 kW	
MINIMUM HEAT OUTPUT CONDENSING	4.0 kW	
GAS RATE	max G31 0.8 m^3/h	
AFTER 10 MINUTES	min 0.15 m^3/h	
INLET PRESSURE	G31 37 mbar	
FAN SPEED C.H. Max 4200 rpm - 140 Hz	Combustion % CO_2 : 10.5 (+ 0.5 / - 0.5) Case ON	
min 1300 rpm - 43 Hz	10.5 (+ 0.5 / - 0.5) Case OFF	
ELECTRICAL SUPPLY	230 V ~ 50 HZ	
POWER CONSUMPTION	110 W	
EXTERNAL FUSE RATING	3A	
INTERNAL FUSE	F1 - 3.15 A (20 mm to BS 4265)	
DRY WEIGHT	28 kg	
WATER CONTENT C.H.	0.8 litre	
WATER CONTENT	0.2 litre	
GAS SUPPLY CONNECTION	15 mm compression isolating valve	
FLOW CONNECTION C.H.	22 mm compression isolating valve	
RETURN CONNECTION C.H.	22 mm compression isolating valve	
INLET CONNECTION D.H.W.	15 mm compression isolating valve	
OUTLET CONNECTION D.H.W.	15 mm compression valve	
SAFETY DISCHARGE C.H.	15 mm copper pipe	
CONDENSATION DRAIN	3/4” (21.5 mm) push fit over flow	
MAX COLD WATER CAPACITY WITHOUT ADDITIONAL EXPANSION VESSEL 110 LITRE		
SEALED WATER SYSTEM C.H.		
MAX PRESSURE PHS	2.5 bar	
MINIMUM WORKING PRESSURE	0.5 bar	
7 LITRES EXPANSION VESSEL PRE-CHARGE-PRESSURE	0.5 bar	
CENTRAL HEATING OPERATING TEMPERATURE	MAX 80 °C	min 35 °C
DESIGN FLOW RATE 1066 l/h 20 °C RISE		
MINIMUM FLOW RATE C.H. 350 l/h		
D.H.W. FLOW RATE 30 °C rise	11.9 l/min	
D.H.W. FLOW RATE 35 °C rise	10.2 l/min	
D.H.W. FLOW RATE 40 °C rise	8.9 l/min	10°C inlet temperature
D.H.W. TEMPERATURE	Max 60 °C	min 35 °C
FAN SPEED D.H.W.	Max 4800 rpm - 160 Hz	min 1300 rpm - 43 Hz
Qmw Input Net	Max 25.4 kW	min 3.7 kW
D.H.W. PRESSURE PMW	Max 6.5 bar (147 p.s.i.)	
D.H.W. PRESSURE PMW	min 0.5 bar (118 p.s.i.)	
D.H.W. MINIMUM FLOW RATE	2.5 l/min	
FLUE OUTLET NOM. DIAMETER 100 mm specially supplied with boilers (If required)		
DESTINATION: GB, IE	CATEGORY II_{2H3P}	
FLUE TYPE - C_{13} - C_{33} - C_{53}	NO_X 5	SEDBUK A IP X4 D

TABLE 3/C

CS 90 (T)
NATURAL GAS (G 20) II_{2H3P}

NOMINAL HEAT INPUT NET QMS	24.5 kW	
MINIMUM HEAT INPUT NET	4.1 kW	
NOMINAL HEAT OUTPUT	23.9 kW	
NOMINAL HEAT OUTPUT CONDENSING	26.4 kW	
MINIMUM HEAT OUTPUT	4.0 kW	
MINIMUM HEAT OUTPUT CONDENSING	4.4 kW	
GAS RATE	max 2.6 m^3/h	
AFTER 10 MINUTES	min 0.4 m^3/h	
INLET PRESSURE	20 mbar	
FAN SPEED Max 4200 rpm - 140 Hz	Combustion % CO_2 : 9.0 (+ 0.5 / - 0.5) Case ON	
C.H. min 1300 rpm - 43 Hz	9.0 (+ 0.5 / - 0.5) Case OFF	
ELECTRICAL SUPPLY	230 V ~ 50 HZ	
POWER CONSUMPTION	119 W	
EXTERNAL FUSE RATING	3A	
INTERNAL FUSE	F1 - 3.15 A (20 mm to BS 4265)	
DRY WEIGHT	29 kg	
WATER CONTENT C.H.	0.8 litre	
WATER CONTENT	0.2 litre	
GAS SUPPLY CONNECTION	15 mm compression isolating valve	
FLOW CONNECTION C.H.	22 mm compression isolating valve	
RETURN CONNECTION C.H.	22 mm compression isolating valve	
INLET CONNECTION D.H.W.	15 mm compression isolating valve	
OUTLET CONNECTION D.H.W.	15 mm compression valve	
SAFETY DISCHARGE C.H.	15 mm copper pipe	
CONDENSATION DRAIN	3/4” (21.5 mm) push fit over flow	
MAX COLD WATER CAPACITY WITHOUT ADDITIONAL EXPANSION VESSEL 110 LITRE		
SEALED WATER SYSTEM C.H.		
MAX PRESSURE PHS	2.5 bar	
MINIMUM WORKING PRESSURE	0.5 bar	
7 LITRES EXPANSION VESSEL PRE-CHARGE-PRESSURE	0.5 bar	
CENTRAL HEATING OPERATING TEMPERATURE	MAX 80 °C	min 35 °C
DESIGN FLOW RATE 1264 l/h 20 °C RISE		
MINIMUM FLOW RATE C.H. 350 l/h		
D.H.W. FLOW RATE 30 °C rise	14.1 l/min	
D.H.W. FLOW RATE 35 °C rise	12.1 l/min	
D.H.W. FLOW RATE 40 °C rise	10.5 l/min	10°C inlet temperature
D.H.W. TEMPERATURE	Max 60 °C	min 35 °C
FAN SPEED D.H.W.	Max 4800 rpm - 160 Hz	min 1300 rpm - 43 Hz
Qmw Input Net	Max 30.1 kW	min 4.1 kW
D.H.W. PRESSURE PMW	Max 6.5 bar	
D.H.W. PRESSURE PMW	min 0.5 bar	
D.H.W. MINIMUM FLOW RATE	2.5 l/min	
FLUE OUTLET NOM. DIAMETER 100 mm specially supplied with boilers (If required)		
DESTINATION: GB, IE	CATEGORY II_{2H3P}	
FLUE TYPE - C_{13} - C_{33} - C_{53}	NO_X 5	SEDBUK A IP X4 D

TABLE 3/D

CS 90 (T)
LPG (G 31) II_{2H3P}

NOMINAL HEAT INPUT NET QMS	24.5 kW	
MINIMUM HEAT INPUT NET	4.1 kW	
NOMINAL HEAT OUTPUT	23.9 kW	
NOMINAL HEAT OUTPUT CONDENSING	26.4 kW	
MINIMUM HEAT OUTPUT	4.0 kW	
MINIMUM HEAT OUTPUT CONDENSING	4.4 kW	
GAS RATE	max G31 1.0 m^3/h	
AFTER 10 MINUTES	min 0.16 m^3/h	
INLET PRESSURE	G31 37 mbar G30 28-30 mbar	
FAN SPEED C.H. Max 4200 rpm - 140 Hz	Combustion % CO_2 : 10.5 (+ 0.5 / - 0.5) Case ON	
min 1300 rpm - 43 Hz	10.5 (+ 0.5 / - 0.5) Case OFF	
ELECTRICAL SUPPLY	230 V ~ 50 HZ	
POWER CONSUMPTION	119 W	
EXTERNAL FUSE RATING	3A	
INTERNAL FUSE	F1 - 3.15 A (20 mm to BS 4265)	
DRY WEIGHT	29 kg	
WATER CONTENT C.H.	0.8 litre	
WATER CONTENT	0.2 litre	
GAS SUPPLY CONNECTION	15 mm compression isolating valve	
FLOW CONNECTION C.H.	22 mm compression isolating valve	
RETURN CONNECTION C.H.	22 mm compression isolating valve	
INLET CONNECTION D.H.W.	15 mm compression isolating valve	
OUTLET CONNECTION D.H.W.	15 mm compression valve	
SAFETY DISCHARGE C.H.	15 mm copper pipe	
CONDENSATION DRAIN	3/4” (21.5 mm) push fit over flow	
MAX COLD WATER CAPACITY WITHOUT ADDITIONAL EXPANSION VESSEL 110 LITRE		
SEALED WATER SYSTEM C.H.		
MAX PRESSURE PHS	2.5 bar	
MINIMUM WORKING PRESSURE	0.5 bar	
7 LITRES EXPANSION VESSEL PRE-CHARGE-PRESSURE	0.5 bar	
CENTRAL HEATING OPERATING TEMPERATURE	MAX 80 °C	min 35 °C
DESIGN FLOW RATE 1264 l/h 20 °C RISE		
MINIMUM FLOW RATE C.H. 350 l/h		
D.H.W. FLOW RATE 30 °C rise	14.1 l/min	
D.H.W. FLOW RATE 35 °C rise	12.1 l/min	
D.H.W. FLOW RATE 40 °C rise	10.5 l/min	10°C inlet temperature
D.H.W. TEMPERATURE	Max 60 °C	min 35 °C
FAN SPEED D.H.W.	Max 4800 rpm - 160 Hz	min 1300 rpm - 43 Hz
Qmw Input Net	Max 30.1 kW	min 4.1 kW
D.H.W. PRESSURE PMW	Max 6.5 bar	
D.H.W. PRESSURE PMW	min 0.5 bar	
D.H.W. MINIMUM FLOW RATE	2.5 l/min	
FLUE OUTLET NOM. DIAMETER 100 mm specially supplied with boilers (If required)		
DESTINATION: GB, IE	CATEGORY II_{2H3P}	
FLUE TYPE - C_{13} - C_{33} - C_{53}	NO_X 5	SEDBUK A IP X4 D

4 GENERAL REQUIREMENTS

4.1 SAFETY

Gas Safety (Installation and Use). Regulations.
It is law that all gas appliances are installed and serviced by a Gas Safe registered installer in accordance with the above regulations and these installation instructions. All registered installers carry a Gas Safe I.D. card and have a registration number. Both should be recorded in your Benchmark commissioning checklist. You can check your installer on the Gas Safe register (www.gassaferegister.co.uk). Failure to install appliances correctly could lead to prosecution. It is in your own interest, and that of your safety, to ensure the law is complied with. Check the boiler and flue is the correct type for installation undertaken.
The installation of the boiler MUST be in accordance with the latest I.E.E. (BS 7671) Wiring Regulations, local building regulations, bye-laws of the local water authority, the building regulations and the Building Standards (Scotland) and any relevant requirements of the local authority.

4.2 GENERAL INFORMATION

Both the user and the manufacturer rely heavily on the installer, whose job it is to install the combination boiler and connect it to a correctly designed heating system. Acquaint yourself with the relevan British Standards concerning installation requirements. If you need further advice on any points contact the Technical Services Office on 0113 2527007 who would be pleased to help. It is recommended that tools suitable for brass fittings are used, and have a capability to accommodate hexagon sizes up to 50 mm.

APPLICABLE CODES OF PRACTICE
Ref: Documents.

Detailed recommendations are contained in the following British Standard Codes of Practice:

BS6891:2005: Low pressure installation pipes.

BS6798: Installation of gas fired hot water boilers of rated input not exceeding 70 kW.

BSEN12828: Design for water based heating systems.

BSEN12831: Heating systems in buildings, Method for calculation of the design heat load.

BSEN14336: Installation & commissioning of water based heating systems.

BS5546: Installation of gas hot water supplies domestic purposes (2nd Family Gases).

BS5440: Flues (for gas appliances of rated input not exceeding 70 kW).

BS5440: 2 Ventilation (for gas appliances of rated input not exceeding 70 kW).

BSEN 677: 1998 Gas fired central heating boilers.
I.S. 813: Domestic gas Installations.

The followings standards give valuable additional information:

BS 7074: Expansion vessels and ancillary equipment for sealed water system.
BS 7593: Treatment of water in domestic hot water and central heating system.

Health & Safety Document No.635
The Electricity at Work Regulations, 1989.

IMPORTANT:
These appliances are CE certificated for safety and performance. It is therefore important that no external control devices e.g. flue dampers, economisers etc., are directly connected to this appliance unless covered by these Installation and Service Instructions or as otherwise recommended by Ravenheat in writing. If in doubt please enquire.

Any direct connection of a control device not approved by Ravenheat could invalidate the certification and the normal appliance warranty.
It could also infringe the Gas Safety regulations and the above regulations.

NOTE:
The Ravenheat CS 80/90 (T) combi boiler has been tested and examined by CERTIGAZ, and is certified to comply with PrEN 483 and BS EN 625.
Manufacturers instructions must NOT be taken in any way as overriding statutory obligations. If in doubt on any point please consult Ravenheat.

4.3 LOCATION OF BOILER

Siting of Ravenheat CS 80/90 (T) combi boiler must be as follows.
The position of installation should be within the building, unless otherwise protected by a suitable enclosure.

Adequate space for installation, servicing and air circulation around the boiler must be allowed for.
Ravenheat CS 80/90 (T) combi boiler must be fitted on a flat and vertical wall capable of adequately supporting the weight of the boiler and any ancillary equipment.
The appliance may be fitted on a combustible wall insulation between the wall and the boiler is not necessary, unless required by the local authority.
For electrical safety reasons there must be no access available from the back of the boiler.

The boiler must not be fitted outside.

LPG versions of this appliance shall not be installed in cellars or basements.

4.4 CLEARANCES AROUND THE APPLIANCE

Side clearance:
The position of the appliance must provide minimum clearance of 5mm as the side panels.

Top clearance:
The top clearance should be a minimum of 125 mm.

Bottom clearance:
A bottom clearance of 80 mm is required between the appliance and any surface. Though 150 mm is preferred whenever possible.

Front clearance:
A minimum of 450 mm is required in front of the appliance for access during servicing, the front clearance can be reduced when installed in a cupboard, to 25 mm from the access door.

4.5 IMPORTANT NOTICE

For installation into timber framed buildings, please refer to the Institute of Gas Engineers Document IGE/UP/7.
The boiler may be installed in any room or internal space, although particular attention is drawn to the requirements of the current I.E.E. Wiring Regulations, and in Scotland the electrical provisions of the Building Regulations applicable in Scotland, with respect to the installation of the combination boiler in a room or internal space containing a bath or shower.

Where a room sealed appliance is installed in a room containing a bath or shower, any electrical switch or appliance control, utilising mains electricity should be situated so that it cannot be touched by a person using a bath or shower.
A compartment when used to enclose the combination boiler MUST be designed and constructed specifically for this purpose.
An existing cupboard, or compartment, may be used provided it is modified accordingly.
Samples of the CS 80/90 (T) combi boiler have been examined by CERTIGAZ notification body, and are certified to comply with the essential requirements of the gas appliance.

Directive 90/396/EEC, the Low Voltage.
Directive 72/23/EEC and shows compliance with the Electro Magnetic Compatibility.
Directive 89/336/EEC and are therefore permitted to carry the CE Mark.

The appliance has been tested and approved by the WRc as meeting the requirements of G3 and L of the Building regulations and water Bylaws Scheme - Approved Products.

4.6 GAS SUPPLY

A gas meter is connected to the service pipe by the Local Gas Region or the Local Gas Region contractor. An existing meter should be checked preferably by the Gas Region to ensure that the meter is adequate to deal with the rate of gas supply required for all appliances it serves. Installation pipes should be fitted in accordance with BS 6891:2005. Pipework from the meter to the boiler must be of adequate size (22 mm) min to within at least one metre of the boiler, (15 mm) min. can then be used for remaining pipe work to the appliance. A smaller size than the boiler inlet gas connection should not be used. The complete installation must be tested for soundness as described in the above code.

N.B. It is the responsibility of the Gas Installer to size the gas installation pipework in accordance with BS 6891:2005. Whilst the principle of the 1:1 gas valve ensures the Ravenheat range is able to deliver the full output at an inlet pressures as low as 14 mbar, other gas appliances in the property may not be as tolerant.
When operating pressures are found to be below the minimum meter outlet of 19 mbar these should be checked to ensure this is adequate for correct and safe operation.

Allowing for the acceptable pressure loss of 1 mbar across the installation pipework, it can be assumed that a minimum permitted operating pressure of 18 mbar (nat gas) will be delivered to the inlet of the appliance. (reference BS 6400-1 Clause 6.2 Pressure Absorption).

The external gas cock could further reduce the operating pressure when measured at its test point. The pressure drop is relative to the heat input to the boiler (kW), refer to graph below.

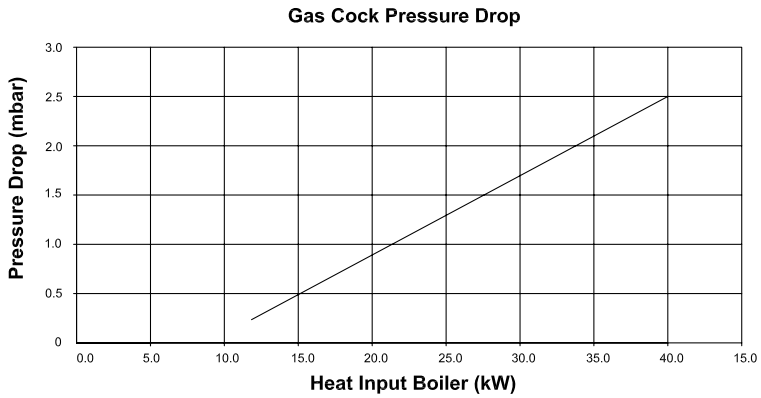

4.7 FLUE SYSTEM

The terminal should be located where dispersal of combustion products is not impeded and with due regard for the damage or discolouration that might occur to building products in the vicinity (section 4.10).
The terminal must not be located in a place where it is likely to cause a nuisance in cold and/or humid weather as water vapour may condense on leaving the flue terminal.
The effect of such pluming must be considered.
The terminal must not be closer than 25 mm (1 inch) to any combustible material for protection of combustibles, refer to BS 5440.1.
Where a flue terminal is installed less than 1000 mm from a plastic, or painted gutter; or 500 mm from painted eaves, an aluminium shield 1000 mm long, should be fitted to the underside of the gutter or painted surface.

Pluming will occur at the terminal so, where possible, terminal positions which could cause a nuisance should be avoided.
The flue must be installed in accordance with the recommendations of BS 5440: Part 1.

IMPORTANT NOTES:
For greater flue lengths see alternative flue instructions. Flue must be positioned in a place not likely to cause a nuisance from pluming.

IMPORTANT NOTICE: If the flue terminates below a balcony, above the ground, above a flat roof to which people have access, then a suitable **terminal guard** must be fitted if less than 2 metres high. The part number is **PRO110100.**
Fit only recommended **FLUE TERMINAL GUARD** by securing concentrically around terminal with screws.
Available on request from:

Ravenheat Manufacturing ltd
Chartists Way, Morley, Leeds,
West Yorkshire
ENGLAND LS27 9ET - UK
Tel. 0113 252 7007

IMPORTANT:
The following notes are intended for general guidance.
The boiler MUST be installed so that the terminal is exposed to external air.

It is important that the position of the terminal allows the free passage of air across it at all times.

Minimum acceptable spacing from the terminal to obstructions and ventilation openings are specified in section 4.10.
Note positions: *Due to the terminal design, installation is possible with clearances less than those specified in BS 5440, Part 1*

NOTE:
The flue must be terminated in a place not likely to cause a nuisance.

A concentric vertical flue kit is available for longer flueing applications (see table 5 page 26).
For further details see vertical flue installation instructions.

4.8 AIR SUPPLY

The following notes are intended for general guidance.
The room sealed fan flued boiler does not require a permanent air vent for combustion air supply.
Where installed in a cupboard or compartment ventilation is not required.

4.9 WATER CIRCULATION (Central heating)

Detailed recommendations are given in BS6798 2009/5449:1990 - BSEN12828 - BSEN12831 - BSEN14336 (for smallbore and microbore central heating systems). The following notes are given for general guidance.

4.10 FLUE TERMINAL POSITION

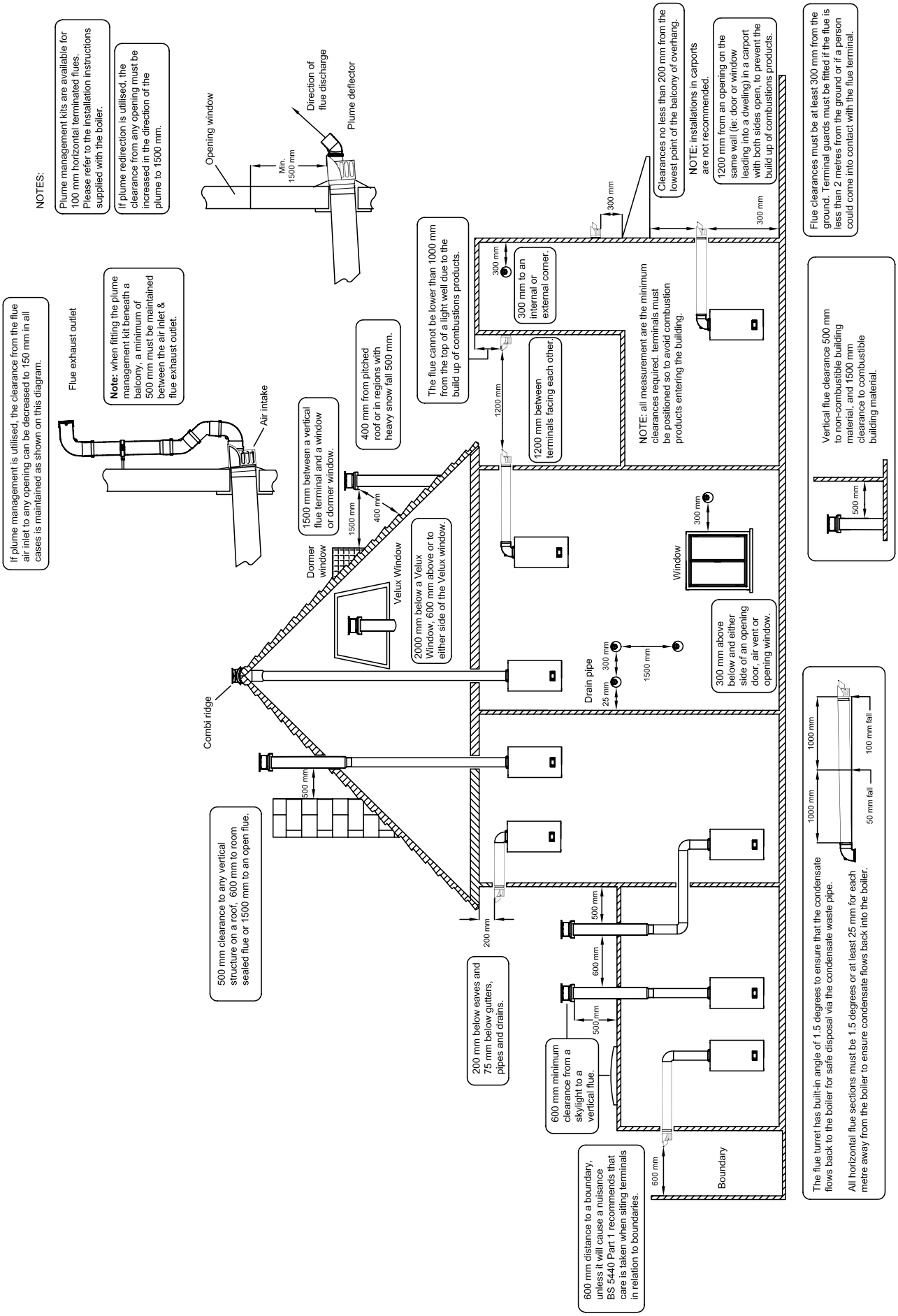

4.11 PIPEWORK

Copper tubing to BSEN 1057:1 2006, BSEN 1172, BSEN 1652 and BSEN 1653, is recommended for water pipes. Jointing should be either with capillary soldered or with compression fittings.
Where possible pipes should have a gradient to ensure air is carried naturally to air release points and water flows naturally to drain taps. It should be ensured as far as possible that the appliance' s heat exchanger is not a natural collecting point for air except where providing useful heat. Pipes should be insulated to prevent heat loss and to avoid freezing. Particular attention should be paid to pipes passing through ventilated spaces in roofs and under floors.

IMPORTANT:
A minimum length of 1 metre of copper pipe MUST be fitted to both flow and return connections from the boiler before connection to any plastic piping.

The water through the appliance heat exchanger circuit must exceed the min. 2.38 gals/min. (650 L/h) when the burner is firing. It is important to ensure that this rate is achieved when sections of the system are shut off either manually or by automatic controls.
If the volume of circulating water is too low, the boiler water temperature will rise too rapidly. This could cause noise in the system or even cause the safety thermostat to trip.
This appliance is designed to work on a two pipe system as shown in fig.6.

4.12 BOILER INTERLOCK CONTROL

Central heating system controls should be installed to ensure the boiler is switched off when there is no demand for heating, in compliance with Building Regulations.
The boiler has its own built in bypass.
If the system has thermostatic radiator valves on all radiators, or two port valves, then a bypass circuit must be fitted with an automatic bypass valve to ensure a flow of water should all valves be in the closed position (fig. 6).
It is important that the system is flushed thoroughly before the appliance is fitted or left to operate (as recommended in BS 7593) in order to maintain an efficiently operating heating system. For replacement installations, the system MUST be flushed with the old boiler insitu, in order to prevent system debris. Once the system has been flushed, an inhibitor (suitable for stainless steel and aluminium heat exchanger) should be added (see section 4.18).

4.13 DRAINING TAP

These must be located in accessible positions to permit the draining of the whole system. The taps must be at least 15 mm nominal size and manufactured in accordance with BS 2870 1980.

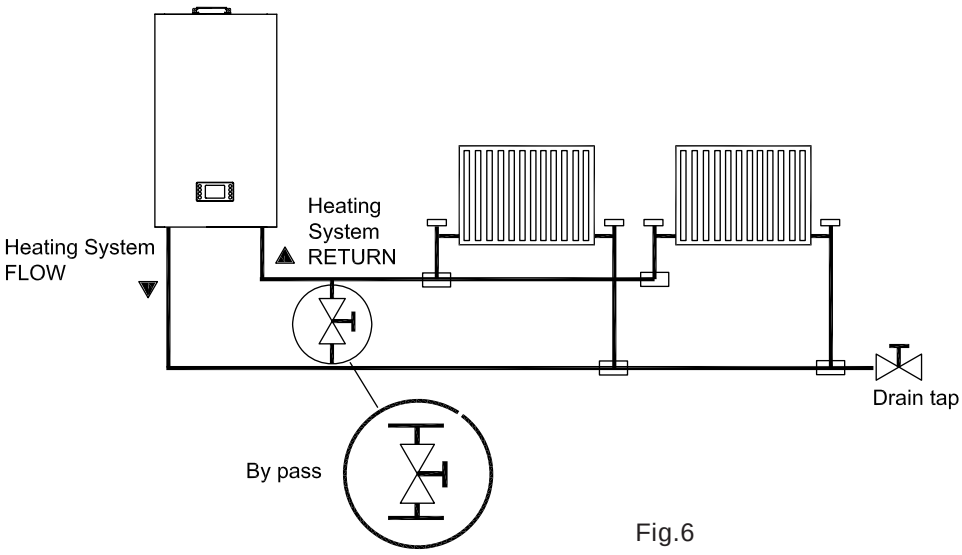

Fig.6

4.14 AIR RELEASE POINTS

These must be fitted at all high points where air will naturally collect, and must be sited to facilitate complete filling of the system.

The appliance has an integral sealed expansion vessel to accommodate the increase of water volume when the system is heated.

It can accept up to 7 L of expansion water If the appliance is connected to a system with an unusually high water content, calculate the total expansion (see table 4) and add additional sealed expansion capacity as appropriate (Fig. 7). In general, modern systems below 7 L should not present any problem.

4.15 MAINS WATER FEED. CENTRAL HEATING

There must be no direct connection to the mains water supply, even through a non-return valve, without the approval of the Local Water Authority.

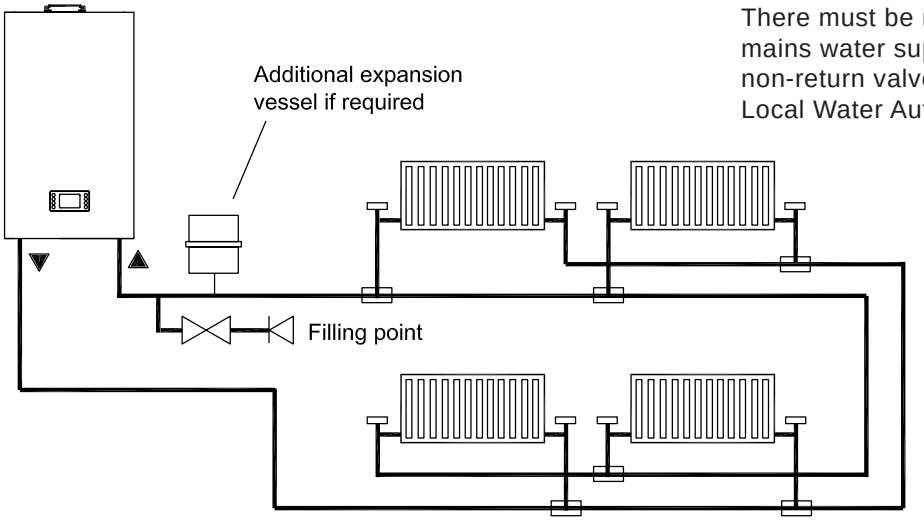

Fig.7

4.16 PERMISSIBLE METHODS OF FILLING

Figure depicts the requirements of Diagram R24.2a of the Water Supply (Water Fittings) regulations 1999.

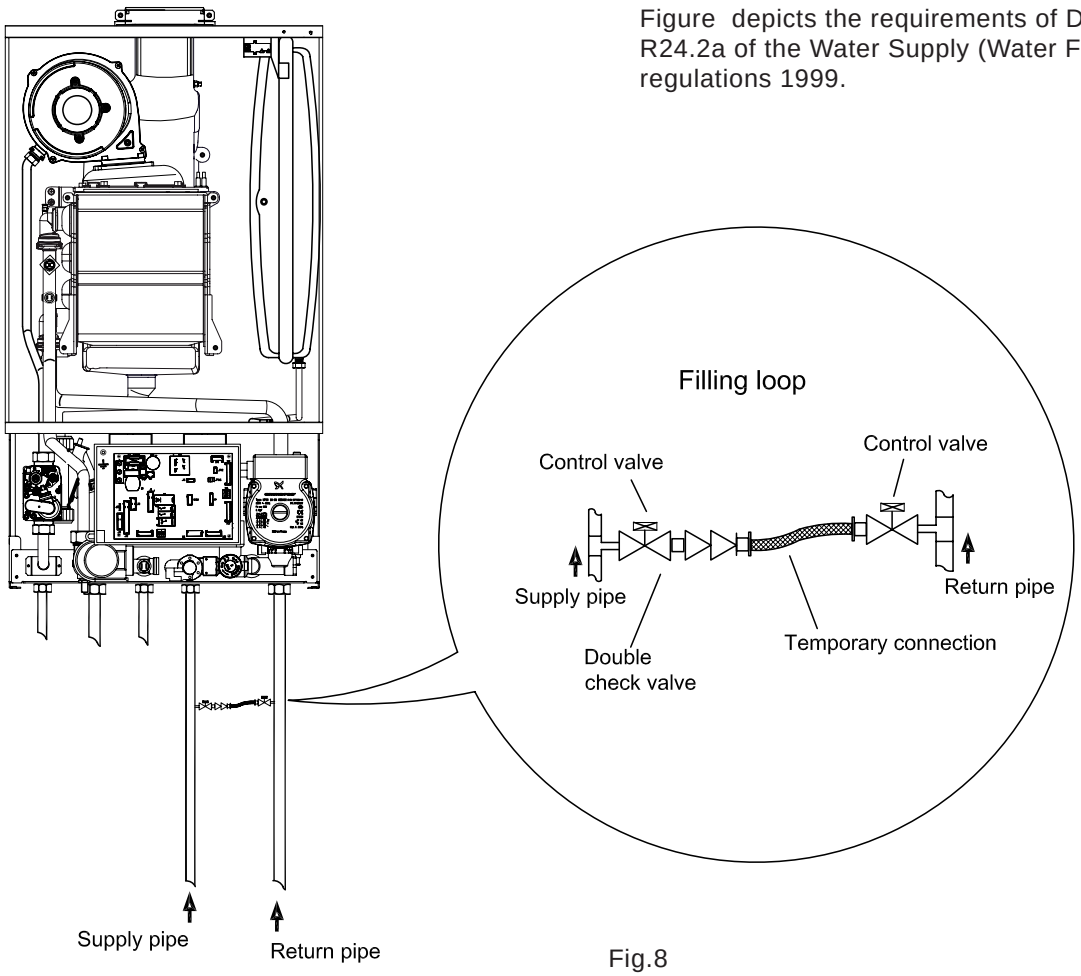

Fig.8

4.17 SIZING OF ADDITIONAL EXPANSION VESSEL TABLE 4

Deduct from the value given in the table the 7 litre vessel supplied.

Safety valve setting (bar)	3.0								
Vessel charge pressure (bar)	0.5				1.0			1.5	
Initial system pressure (bar)	0.5	1.0	1.5	2.0	1.0	1.5	2.0	1.5	2.0
Total water content of system	EXPANSION VESSEL VOLUME (LITRES)								
Litres									
25	2.1	3.5	6.5	13.7	2.7	4.7	10.3	3.9	8.3
50	4.2	7.0	12.9	27.5	5.4	9.5	20.6	7.8	16.5
75	6.3	10.5	19.4	41.3	8.2	14.2	30.9	11.7	24.8
100	8.3	14.0	25.9	55.1	10.9	19.0	41.2	15.6	33.1
125	10.4	17.5	32.4	68.9	13.6	23.7	51.5	19.5	41.3
150	12.5	21.0	38.8	82.6	16.3	28.5	61.8	23.4	49.6
175	14.6	24.5	45.3	96.4	19.1	33.2	72.1	27.3	57.9
200	16.7	28.0	51.8	110.2	21.8	38.0	82.4	31.2	66.2
225	18.7	31.5	58.3	124.0	24.5	42.7	92.7	35.1	74.5
250	20.8	35.0	64.7	137.7	27.2	47.5	103.0	39.0	82.7
275	22.9	38.5	71.2	151.5	30.0	52.2	113.3	42.9	91.0
300	25.0	42.0	77.7	165.3	32.7	57.0	123.6	46.8	99.3
325	27.0	45.5	84.1	179.1	35.7	61.7	133.9	50.7	107.6
350	29.1	49.0	90.6	192.8	38.1	66.5	144.2	54.6	115.8
375	31.2	52.5	97.1	206.6	40.9	71.2	154.5	58.5	124.1
400	33.3	56.0	103.6	220.4	43.6	76.0	164.8	62.4	132.4
425	35.4	59.5	110.1	239.2	46.3	80.7	175.1	66.3	140.7
450	37.5	63.0	116.5	247.9	49.0	85.5	185.4	70.2	148.9
475	39.6	66.5	123.0	261.7	51.8	90.2	195.7	74.1	157.2
500	41.6	70.0	125.9	275.5	54.5	95.0	206.0	78.0	165.5
For system volumes other than those given above, multiply the system volume by the factor across	0.0833	0.140	0.259	0.551	0.109	0.190	0.412	0.156	0.331

Note: This pressure can be increased up to 1.5 bar to suit high static head situations.

If the capacity of the central heating system should exceed 110 L, an additional vessel should be installed on the return to the combination boiler from the heating system (fig. 7). Guidance on vessel sizing is given (see table 4).
Reference should be made to British Gas Publications. Draining taps should be at least 1/2" in BSP nominal size and be in accordance with BS 2879.

4.18 INSTALLATION TO AN EXISTING CENTRAL HEATING SYSTEM

The combination boiler is designed to operate on a sealed system only. Therefore if the existing system is of the open water type it will have to be modified to comply with BS 5376 Part 2.
Before installing a new combination boiler to an existing system, flush out the old system with a recommended descaling agent.
If the boiler is installed in an existing system any unsuitable additives *MUST* be removed by thorough cleaning, and flushing out the old system with recommended descaling agent.

.
BS 7593:2006 details the steps necessary to clean domestic central heating system. Also check pipework and renew any corroded pipework or fittings. Valve glands must be repacked or replaced wherever necessary and any defective controls exchanged.

Debris from the system can damage the boiler and reduce the efficiency. Failure to comply with the guidelines for the use of water treatment with the appliance will invalidate the appliance guarantee and contravene the Building Regulations.

It is recommended that you fit a primary water cleanser to the system. We recommend fitting a filter that will help remove both magnetite and non-magnetic debris.

4.19 WATER TREATMENT

This boiler has an aluminium and stainless steel heat exchanger, Ravenheat recommend the use of FERNOX or SENTINEL, or other treatment products recognised by Ravenheat which must be used in accordance with the manufacturer's instructions.

4.20 HARD WATER AREAS

If the area of installation is recognised as a hard water area, it is recommended that a suitable water treatment device is installed on the mains supply. The water hardness can be determined by using the standard test paper or by referring to local water authority.

4.21 DOMESTIC WATER

The domestic hot water must be in accordance with the relevant recommendations of BS 5546. Copper tubing to BS 2871-1 is recommended for water carrying pipework and MUST be used for pipework carrying potable water.

4.22 ELECTRICAL SUPPLY

Warning: this appliance must be earthed

External wiring to the appliance must be carried out by a competent person and be in accordance with the current I.E.E. Regulations and local regulations which apply. Ravenheat boiler is supplied with a connection to a 230 V ~ 50 Hz single phase supply.
The supply must be fused at 3 A.

NOTE: The method of connection to the electricity supply MUST facilitate complete electrical isolation of the appliance, by the use of a fused, double pole isolator, having a contact separation of at least 3 mm in all poles. The point of connection to the electricity supply must be readily accessible and adjacent to the appliance except, where the appliance is installed in a bathroom.

The current electrical IEE Wiring regulations must be followed in GB.

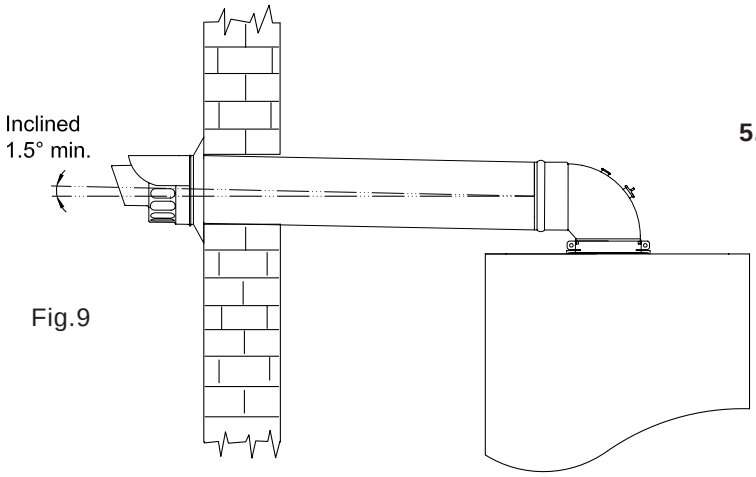

Fig.9

5 INSTALLATION

5.1 WARNING

It is MOST IMPORTANT that this appliance is installed in a HORIZONTAL POSITION, with the flue air duct passing through the wall.
Make sure the flue is at a 1.5° incline, rising from the boiler with 50 mm.
Flue terminal diagram states 1.5° - 25 mm, fall back on flue (fig. 9).

5.2 DELIVERY

The appliance carton contains:

a) Boiler fully assembled with flue adaptor
b) Installation instructions, user instructions and Benchmark log book
c) White paper template
d) Guarantee card
e) Polythene bag containing:
- 1-15 mm gas service valve
- 2-22 mm compression ball valves complete with 3/4" washers
- 1-15 mm compression ball valves complete with 1/2" washers
- 1- 15 mm compression ball valve
- 2 fixing bolts and wall plugs

IMPORTANT NOTES:
This appliance will produce a plume of condensation in cool weather. This is due to the High Efficiency and hence low flue gas temperature of the boiler. A plume management kit is available. (see section 5.6 fig 12)

5.3 UNPACKING OF BOILER

IMPORTANT:
With regard to the Manual Handling Operations, 1992 Regulations, the following lift operation exceeds the recommended weight for a one man lift.

- Stand the boiler carton upright.
- Open the top of the carton.
- Rest the carton on the floor (keeping the flaps open).
- Turn the carton over with the boiler inside and then pull the carton up away from the boiler.
- Rest the boiler on its back on the floor to prepare it for installation.

5.4 POSITIONING OF THE BOILER

Unscrew the two lower screws that secure the front panel and pull forward and lift up (fig. 39).

Unscrew the 4 screws that fasten the lower grating on the casing and remove it from the bottom of the casing.

Make sure the casing and screws are put to one side in a safe place.

5.5 OPTIONAL EXTRAS

HORIZONTAL FLUE KIT BOX CONTAINING (Fig 10):

57 - Elbow header
59 - Rubber seal Ø 60
56 - Rubber seal Ø 100
60 - Fumes sample point
61 - Flue exhaust duct
62 - Air intake duct
69 - Air sample point
127 - Terminal Rubber wall seal

IMPORTANT: Please lubricate the internal part of the seals before fitting.

Generally speaking, oils and greases are not suitable for the "peroxide -EPDM", therefore we suggest a correct lubrication using silicon-substances, for instance "Silikon Spray" (Arexons).

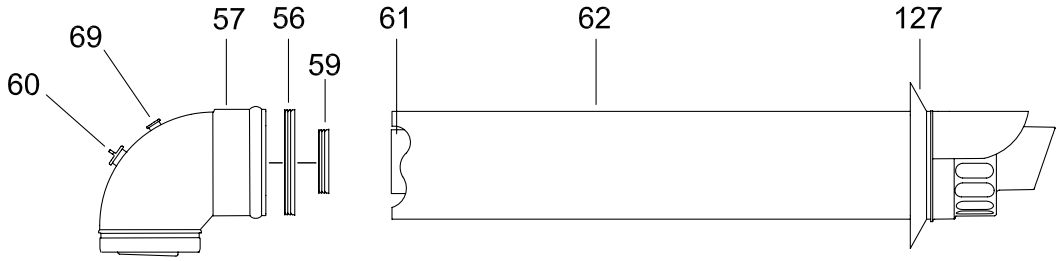

Fig 10

FLUE EXTENSION BOX CONTAINING (Fig. 11):
1000 mm flue extension duct as an extra cost only when requested for side and vertical flue applications.

59 - Rubber seal Ø 60
63 - Air intake duct extension
64 - Flue exhaust duct extension

WARNING: With horizontal concentric flue, the maximum flue length is 8 metres, duct extension can be used with the standard flue (see table 5).

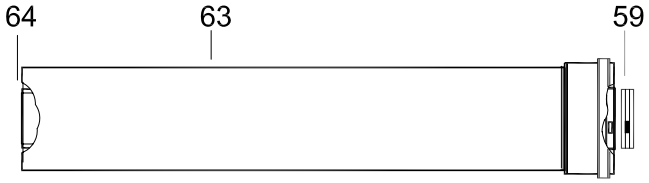

Fig 11

TYPE OF FLUE SYSTEM (All types) - minimum and maximum distance **TABLE 5**

Flue type	C_{13}		C_{33}		C_{53} [1]
Flue Diameter	60/100 (concentric)	80/125 (concentric)	60/100 (concentric)	80/125 (concentric)	80 mm single pipe
Minimum length (m)	0.3 (horizontal length)	0.3 (horizontal length)	1.0 (vertical length)	1.0 (vertical length)	0.5
Maximum length (m)	8.0	23.0	13.0	26.0	43.0
Equivalent length of 45° bend (m)	0.5	1.25	0.5	1.25	1.25
Equivalent length of 90° bend (m)	1.0	2.5	1.0	2.5	2.5

5.6 PLUME MANAGEMENT KIT (Fig 12)

Max 6000 mm flue extension duct as an extra cost only when requested to reduce pluming nuisance of condensation from 60/100 horizontal concentric flue.

Plume Management Kit	**TABLE 6**
Maximum Length (mm) minimum length (mm)	6000 500
Equivalent length of 45° bend (mm) Equivalent length of 90° bend (mm)	500 1000
The Maximum permitted flue length is measured from the centre line of the flue terminal to the top of the outlet terminal	
IMPORTANT : Max flue length must not exceed 6 m with a horizontal concentric 60/100 flue of 3 m (L)	

Plume Management Kit Part No.

Part. No.	Description
TER110101 (Fig. 12)	1 metre high plume kit containing: n. 1 terminal bend n. 1 90° elbow bend n. 2 45° bend n. 1 metre 60 M-F flue length n. 1 flue length bracket
CUR110050 (Fig. 12a)	45° flue exhaust deflection bend
CUR110100 (Fig. 12a)	90° flue exhaust deflection bend

IMPORTANT: Please lubricate the internal part of the seals before fitting.

FLUE EXHAUST DEFLECTION BEND (Fig 12a)

Flue exhaust deflection bend are also available. These come in both 45° and 90° degree versions. These bends fit directly onto the flue exhaust terminal to deflect the flue gas plume in an upward or sideways direction.
Although they are not substitute for a plume kit, they can be considered useful where condensate pluming is causing a nuisance or can be used to eliminate condensate collecting on the end of the horizontal flue terminal.

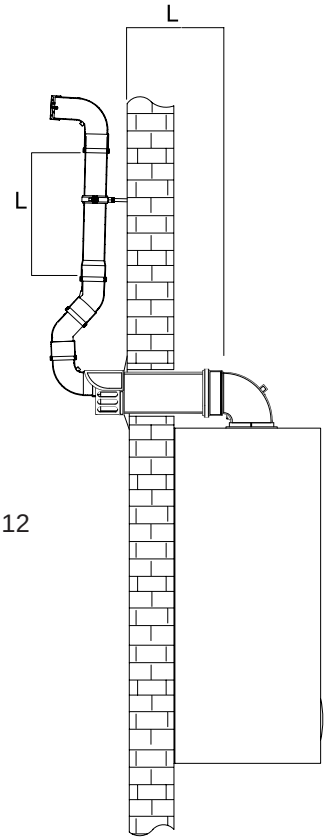

Fig. 12

L+L max 6000 mm
minimum plume kit length 500 mm

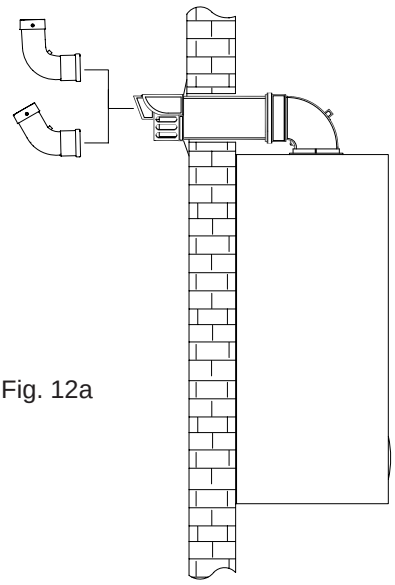

Fig. 12a

5.7 INSTALLING THE APPLIANCE FOR REAR FLUE OUTLET (Fig. 13, 16, 17, 18). FOR APPLIANCE CLEARANCES SEE SECT. 4.4 AND SECT. 4.10

Use adhesive tape to attach the template to the wall, making sure that the centre line is vertical and that the clearance distance is no less than that shown in fig. 13.

- Mark the two holes for the top fixing bolts to fix the boiler on the wall as well as the centre of the flue duct.
- Detach the template from the wall.
- Use a 10 mm dia drill to make the 2 holes. Insert the plastic expansion plugs.
- Cut or core drill a 105 mm dia hole for inserting the flue duct.

Fit the elbow header into the flue flange on the top of the boiler, positioning it towards the required direction (fig 13).

Important: Make sure that the inner 60 mm diameter of the elbow header is inserted fully into the flue manifold, and the flue manifold rubber seal is correctly fitted. (Fig 17 item 65)

If using the horizontal flue duct and it is too long it can be shortened. Should it be necessary to cut the flue always cut on right angles and ensure the cut is de-burred.

Note: Add 30mm to overall flue length to allow for terminal wall cover.(fig.10 item 127).

Insert the flue assembly locating it onto the wall.

Lift the boiler on the wall, locating onto the top two fixing bolts. Tighten the two bolts using a spanner to secure to the wall.

Working above the boiler pull the flue exhaust duct towards the boiler in order to engage tube (fig. 18 item 61) into its header.
Position flue into elbow header and push so as to locate inner and outer flue correctly ensuring a good seal is made with O-rings. Tighten the two screws on the flue flange to secure the elbow header in place.

Fit the terminal rubber wall seal and if necessary terminal guard.

Extension kits are available to order for flue extension of up to a total overall length of 8 metres (fig.18).

Each extension length extends the pipe by approximately 1000 mm long up to a maximum of seven extensions.

Extensions must be installed with the widened end of the pipe and the tapered end of the flue pipe aimed towards the exhaust terminal.

IMPORTANT:
Inline flue bend - 1000 mm must be deducted from overall length for each 90°bend. Obtuse flue bend - 500 mm must be deducted from overall length for each 135° bend
(see table 5).

5.8 INSTALLING THE APPLIANCE FOR SIDE FLUE OUTLET (Fig. 14, 15, 16, 17, 18)

- Attach the template to the wall with adhesive tape, making sure that the centre line is vertical and that the distance from the centre line to the nearest side wall is not less than measurement in fig.14.
- Mark the two fixing bolt securing holes on the wall and extend the axis of the flue duct hole to the side wall ensuring it is horizontal.
- **Make sure flue slopes 1.5° down towards the boiler and that there is a 25 mm fall per metre of the flue length.**
- Trace the centre of the flue duct hole and measure distance from the corner of the wall (fig.14), measure the distance (127 mm) between the centre of flue duct hole to the corner.
  Detach the template from the wall.
- Use a 10 mm. dia drill to make the 2 holes for the fixing bolts. Insert the plastic expansion plugs. Core drill a 105 mm dia. hole in the side wall for inserting the flue duct.

Fit the elbow header into the flue flange on the top of the boiler, positioning it towards the required direction.

Important: Make sure that the inner 60mm diameter of the elbow header is inserted fully into the flue manifold, and the flue manifold rubber seal is correctly fitted. (Fig 17 item 65)

If using the horizontal flue duct and it is too long it can be shortened.
Should it be necessary to cut the flue always cut on right angles and ensure the cut is de-burred.

Note: Add 30 mm to overall flue length to allow for terminal rubber wall seal (fig.10 item 127).

REAR FLUE OUTLET

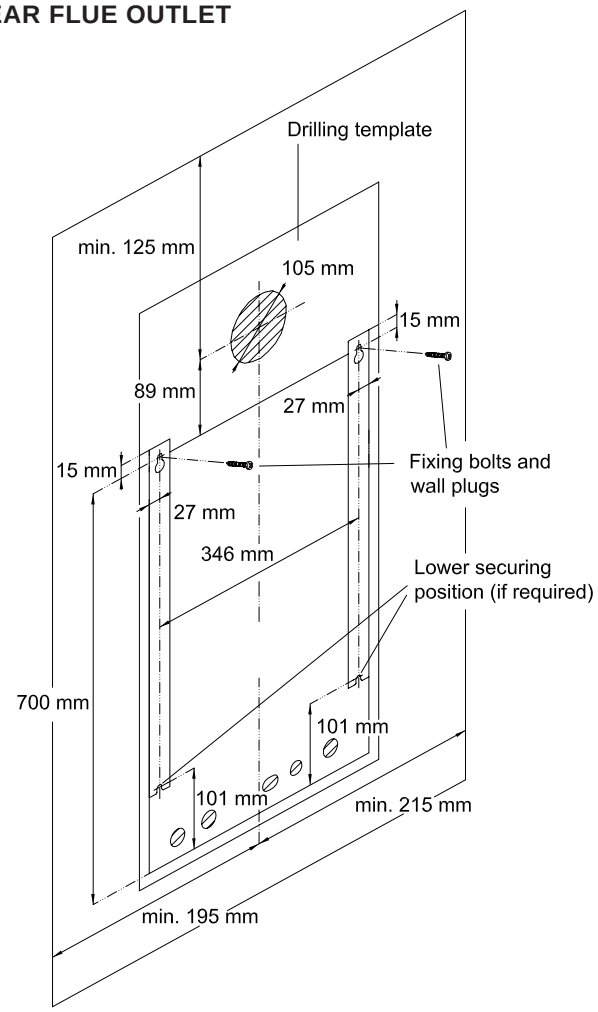

NOTE: The position of the appliance must provide minimum side clearances of 5mm as the side panels.

Fig 13

Insert the flue assembly into the wall, making sure it will not interfere when fixing the boiler on the wall.

Lift the boiler on the wall, locating onto the two fixing bolts. Tighten the two bolts using a spanner to secure to the wall.

Working above the boiler pull the flue duct towards the elbow in order to engage the tube into its header (fig.10). Position the flue elbow in line with the flue and push so as to locate inner and outer flue correctly. Ensuring a good seal is made with O-rings. Tighten the two screws on the flue flange to secure the elbow header in place.

IMPORTANT:
Terminal rubber wall seal must be fitted (item 127 fig.10).

Each extension length extends the pipe by approximately 1000 mm long up to a maximum of seven extensions. Pipeline length can be established using the instructions in section 5.5. Extensions must be installed with the widened end of the air intake pipe and the tapered end of the flue pipe aimed towards the exhaust terminal.

Extensions must be joined together with the standard terminal pipe, and inserted in each other as far as they can go.
If an extension must be shortened, this must be done from the straight end, and not from the widened or tapered end. To measure the pipeline properly all components must be assembled and total length measured before cutting. The straight end of the extension connects to the boiler. The flue output and air intake pipes fits into the boiler header until it stops (fig.17 - 18).
When cutting both inner and outer ducts of the extension, always ensure that the reduced end (male) of the inner and outer duct are square and to the same length.

SIDE FLUE OUTLET

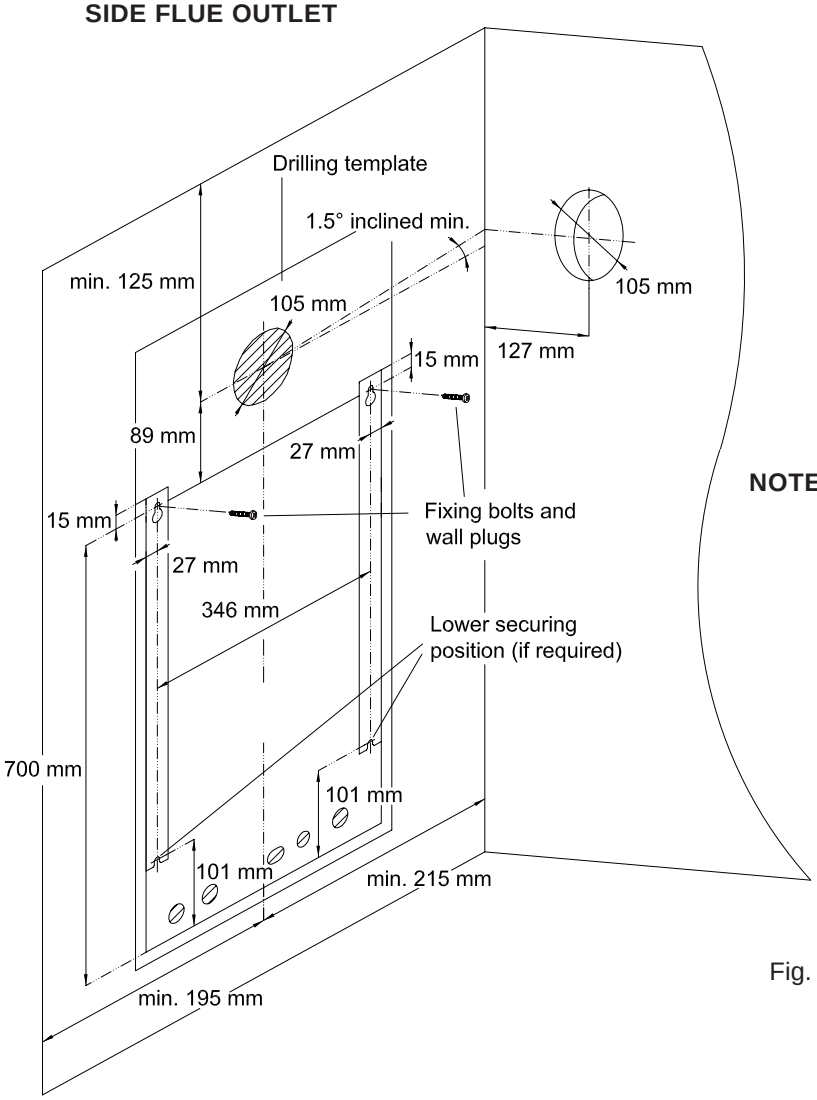

NOTE: The position of the appliance must provide minimum side clearances of 5 mm as the side panels.

Fig. 14

All joints must be sealed with the rubber seals supplied.
It is important to put the centering spacer, supplied with the unit, inside between the two pipes, from the side opposite the extension's straight end.

NOTE: A suitable support bracket (flue bracket) is available from Ravenheat and should be used to support the flue length at least every one metre preferably at each joint this bracket should be secured to wall and flue duct.

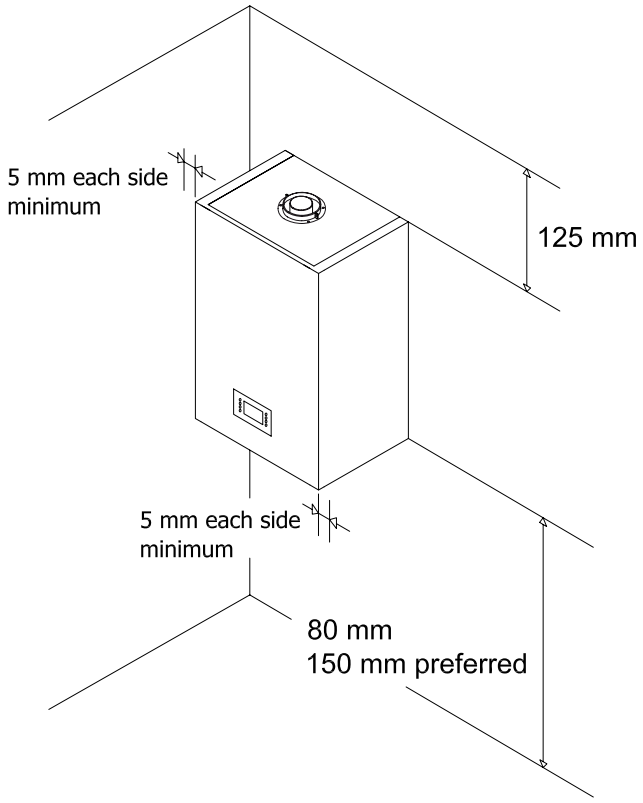

Fig. 15

5.9 COMPLETING HORIZONTAL FLUE INSTALLATION.

Ensure the flue system has been checked for soundness, is stable and secure. Where the horizontal flue terminal passes through the external wall, it is essential that the flue must be sealed on both in exterior and interior part of the wall.
The terminal rubber must also be fitted (fig. 16-17 item 127).

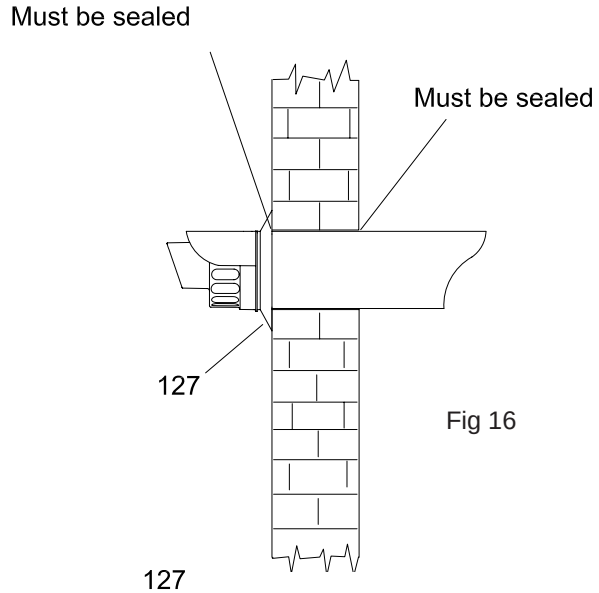

Fig 16

5.10 INTAKE AND EXHAUST TERMINAL COMPONENTS

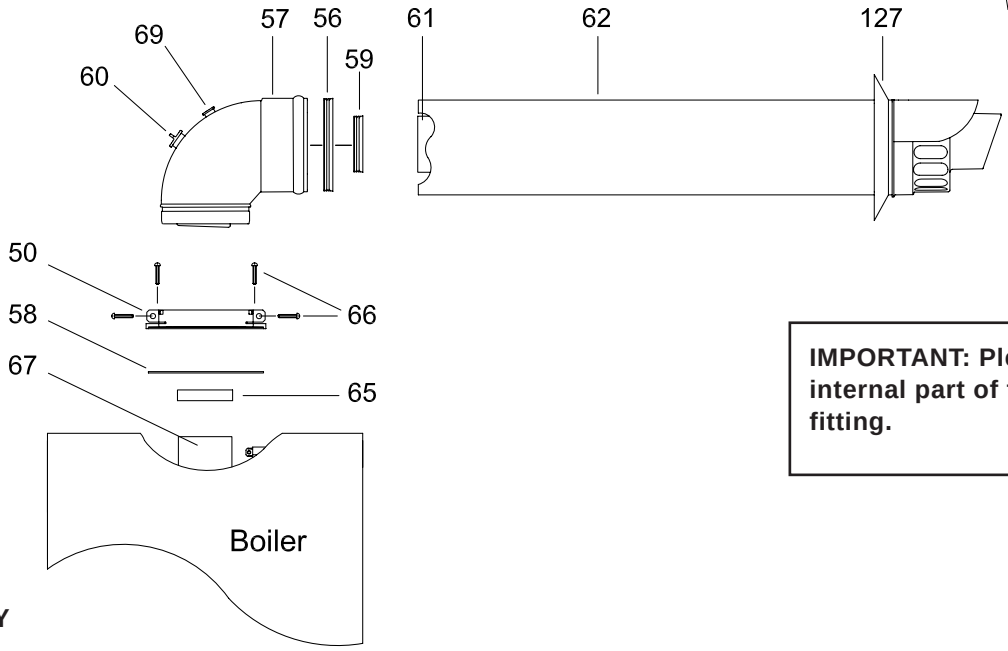

Fig.17

IMPORTANT: Please lubricate the internal part of the seals before fitting.

KEY

50 - Flue flange
56 - Rubber seal Ø 100
57 - Elbow header
58 - Header gasket
59 - Rubber seal Ø 60
60 - Fumes sample point
61 - STD flue exhaust duct
62 - Terminal
63 - Flue extension
64 - Flue exhaust duct extension
65 - Flue manifold rubber seal
66 - Securing screw
67 - Flue temperature sensor
69 - Air sample point
127 - Terminal Rubber wall seal

5.11 IN-LINE FLUE BEND AND FLUE EXTENSION

IN-LINE FLUE BEND
Measure the distance between the flue bends or the flue/terminal assembly. The measurements should be taken from the outer edge of the flue and bend (fig. 18).

49 - In-line Flue Bend
56 - Rubber seal Ø 100
59 - Rubber seal Ø 60
63 - Air intake duct extension
64 - Flue exhaust duct extension

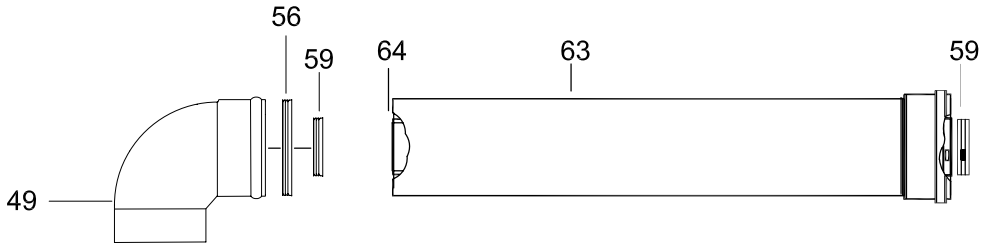

Fig.18

5.12 VERTICAL FLUE INSTRUCTION ONLY (Fig. 19-20-21)
SEE SECT. 4.10 FOR PERMISSIBLE FLUE POSITION

IN-LINE FLUE BEND - 1000 mm MUST BE DEDUCTED FROM OVERALL LENGTH FOR EACH 90° BEND
OBTUSE FLUE BEND - 500 mm MUST BE DEDUCTED FROM OVERALL LENGTH FOR EACH 135° BEND.

The vertical flue kit is intended for use where a horizontal flue outlet is not possible or desired. The vertical flue can be used either with a flat roof or a pitched roof (maximum pitch 60°).
Where a straight vertical flue is not possible or desired, an offset vertical flue can be used in conjunction with a side horizontal flue extension piece and in-line 135°/90° flue bend (fig. 19).

IMPORTANT NOTES : For greater flue length see twin flue or concentric 80/125 flue instructions

Proceed with installation as detailed in section 5 ignoring all references to horizontal flue installations. Use adhesive tape to attach the template to the wall, making sure that the centre line is vertical and that the flue centre line is virtually below the point at which the flue will exit the roof.

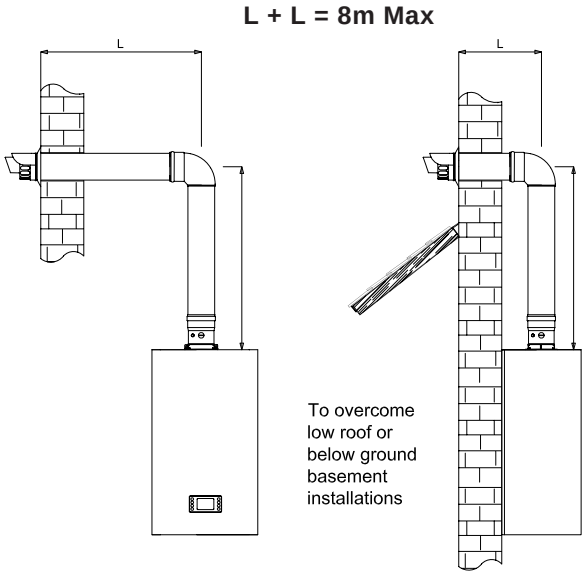

Fig. 19

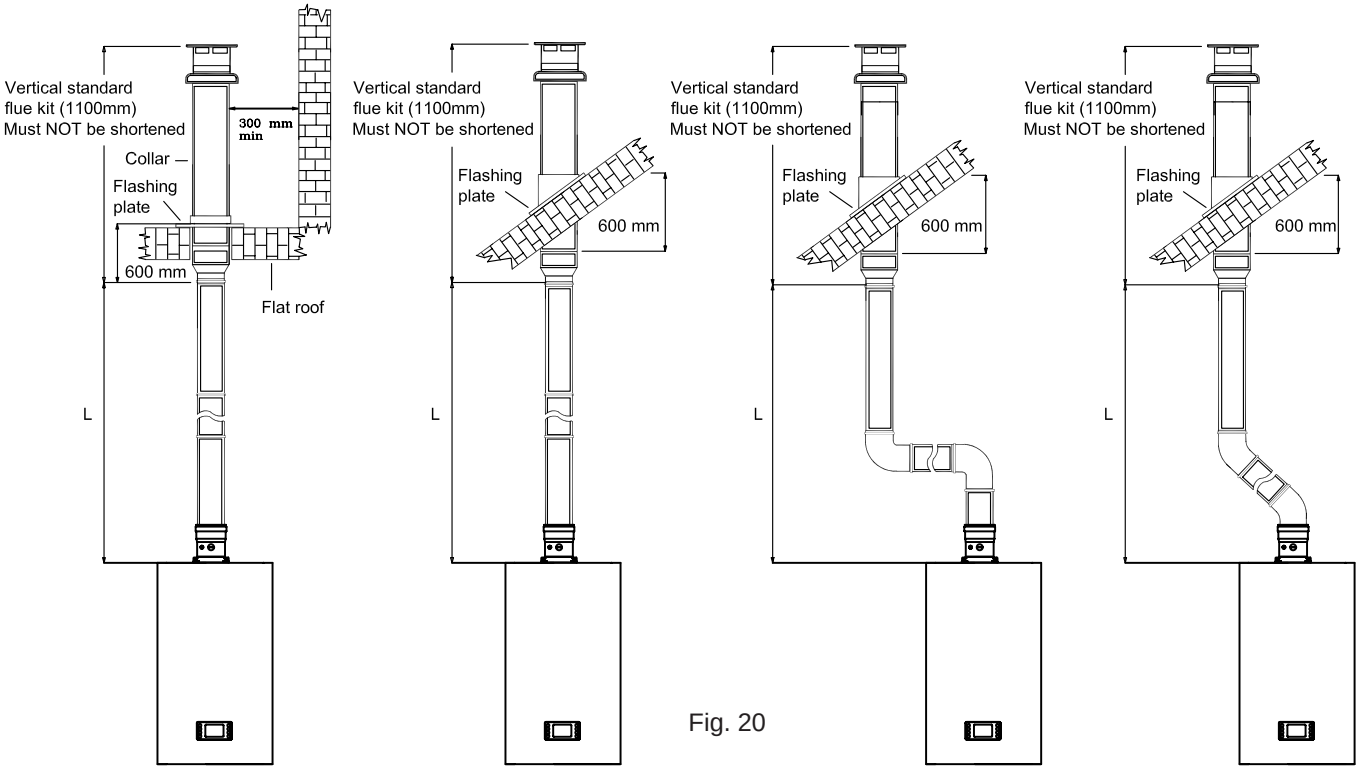

Fig. 20

Straight Flue	Straight Flue	Offset Flue	Offset Flue
L = 12 m Max	L = 12.0 m Max	L = 10 m Max	L = 11 m Max
plus Terminal	plus Terminal	plus 2 bend 90° and Terminal	plus 2 bend 45° and Terminal

- Ensure that the maximum permissible flue length is not exceeded (fig. 20 and see table 5).
- Mark the two wall fixing bolt holes
- Detach the template from the wall.
- Use a 10 mm dia. drill to make the 2 holes.
- Insert plastic expansion plug.
- Screw in the two coach bolts.
- Position the flue sample point starter (straight flue header which must be fitted) and fix the securing screw on the flue adaptor appliance (fig. 22 item 66), and ensure that the gasket is correctly fitted.

Important: Make sure that the inner 60 mm diameter of the straight flue header is inserted fully into the flue manifold, and the flue manifold rubber seal is correctly fitted. (Fig 22 item 65)

Cut a 105 mm diameter hole through the ceiling and/or roof, at the point previously marked.
Fit a roof flashing slate to the roof, available from Ravenheat. Insert the Vertical Flue terminal assembly through the flashing slate from the outside.
Lift the boiler on the wall, locating onto the top two fixing bolts. Tighten the two bolts using a spanner to secure to the wall.
Measure the vertical distance between the top of the flue and the bottom of the flue terminal assembly (fig. 21). The measurements should be taken from the outer diameter of the flue.
NOTE: Where this length does not match any standard combination of the extensions, only the extension can be cut to the required length (fig. 23).
When cutting both inner and outer ducts of the extension, always cut on spigot side, and they must be de-burred.

ACCESSORIES CONCENTRIC FLUE 60/100 EXTRAS: TABLE 7

Part. No.	Description
PR5094110A	Straight flue header / sample point 60/100
PRFE	Flue Extension 60/100 L1000
PR45FBI	45° bend 60/100
PR90FBI	90° Elbow bend 60/100
PR5023016	Horizontal terminal 60/100
TER110200	Vertical flue Terminal

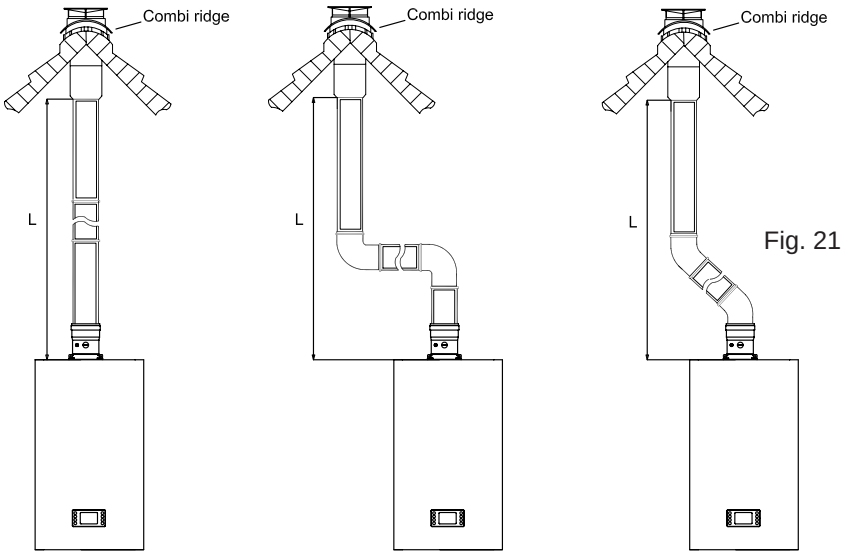

Fig. 21

Straight Flue
L = 12 m Max
plus Combi ridge

Offset Flue
L = 12 m Max
plus 2 bend 90°
and Combi ridge

Offset Flue
L = 11 m Max
plus 2 bend 45°
and Combi ridge

Starting at the appliance end, assemble the extension duct sections, making each inner and outer (flue) joint by inserting the spigot end into the socket end of the next tube, making sure the seal rings are correctly located (fig. 22). Make sure that the entire flue is adequately supported. Use at least one bracket for each extension used.
Ensure that all inner flue connections have a good fit/seal, and that the space clips in each extension are correctly positioned.

Fig.22

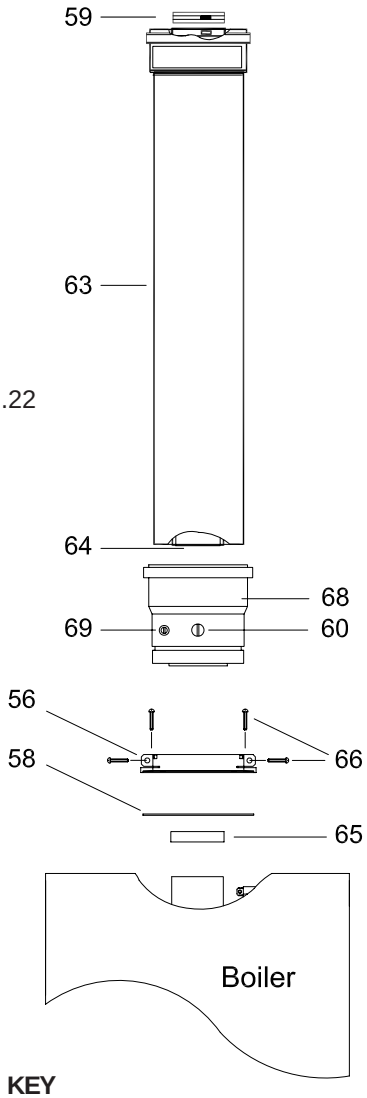

KEY

56 - Flue adapter
58 - Header gasket
59 - Rubber seal Ø 60
60 - Fumes sample point
63 - Flue extension
64 - Flue exhaust duct extension
65 - Flue manifold rubber seal
66 - Securing screw
68 - Flue starter
69 - Air sample point

Fig.23

IMPORTANT: Please lubricate the internal part of the seals before fitting.

5.13 INSTALLATION INSTRUCTIONS FOR TWIN FLUE PIPE (ECCENTRIC FLUE DUCT SYSTEM)

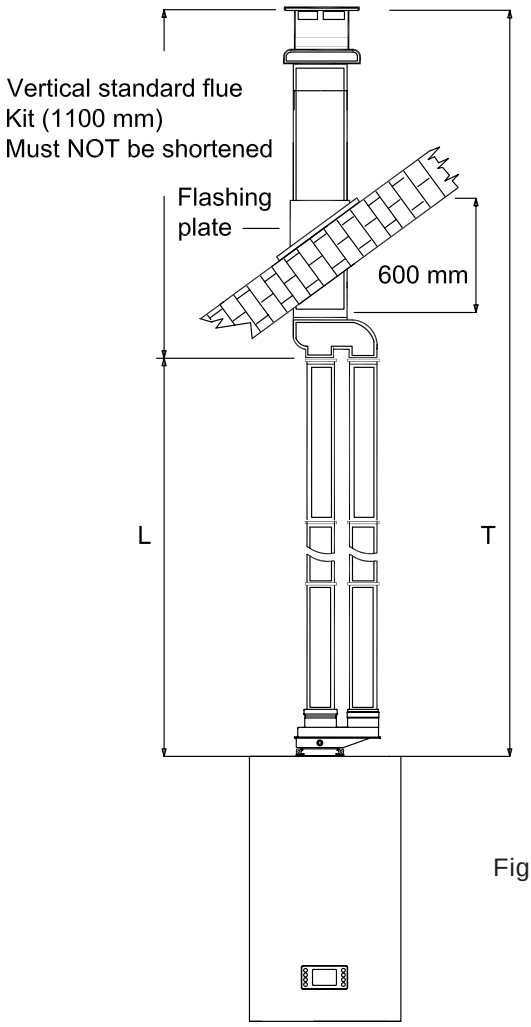

Fig. 24

Straight flue
L= 42 m max + terminal
T= Max length 43 m

IMPORTANT: Please, lubricate the internal part of the seals before fitting.

IMPORTANT:
These instructions must be read in conjunction with the main installation and servicing instructions.
As with all flues the kits must be installed taking due account of the current issue of BS 5440 parts 1 & 2 and timber frame housing DM2 is referenced to the Institute of Gas Engineers Document IGE/UP/7.
Also note that the requirements will vary depending upon the kit being installed.
Guidance is provided but unless otherwise stated, always comply with the recommendations of the relevant codes of practice.

TABLE 8

Part. No	Description
SDO110050	Twin flue header F80/F80
PRO110200	Straight pipe L.1000 80
CUR110150	90° elbow bend 80
CUR110200	45° bend 80
GRI110050	Air inlet terminal 80
GRI110100	Exhaust terminal 80
TER060110	Vertical eccentric flue Terminal

5.14 TWIN FLUE INSTRUCTIONS

This part of the installation manual covers the installation and fixing instructions of the twin flue eccentric flue duct systems only.
When ordering twin flue it must be stated for CS 80/90 (T) range.
Typical installation procedures are illustrated by drawings.
Remove the front panel of the case (sect.8.1).
Unscrew the screw (item 66 fig. 17) on the flue adapter.

Make sure that the flue manifold rubber seal is located into the flue manifold, and lubricate the internal part of the seal before assembly.
Locate the header gasket on the twin flue header and push into the flue adaptor making sure that the inner plastic exhaust locates firmly in the outlet spigot of the flue manifold, and screw the securing screw that secure the twin flue header on the boiler.
Locate the 2 x 80 mm O-rings in the twin flue header and lubricate the internal part of the seal before assembly to ensure easy snug fit.
Figures show the versatility of this flueing system. Measurements and bends must be calculated correctly to ensure the maximum flue length is not exceeded.
All located O-rings must be lubricated with a silicone grease to ensure a snug fit.

NOTE: Exhaust flue must slope 1.5° down towards the boiler 25 mm/m fall per metre of flue length.

Spacing Clips
Spacing Clips are available on request should they be required.
NOTE: for eccentric vertical flue a 125 mm (5 in) diameter flashing plate will be required.

IMPORTANT:
- **See fig. 6 for terminal clearances.**

IMPORTANT NOTICE:
- **Inlet and exhaust terminals must never be installed on opposite walls of the building (PrEN 483).**
- If the flue terminates less than 2 m above a balcony, above the ground, or above a flat roof to which people have access, then a suitable terminal guard must be fitted.
- Fit only recommended flue terminal guard by securing concentrically around terminal with screws.

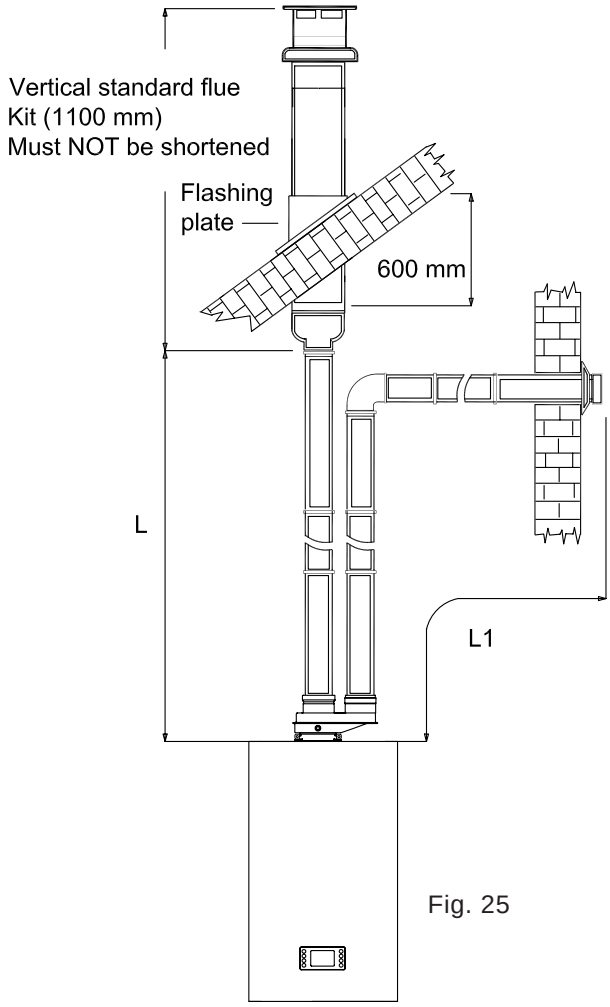

Fig. 25

L + L1= 39.5 m + terminal

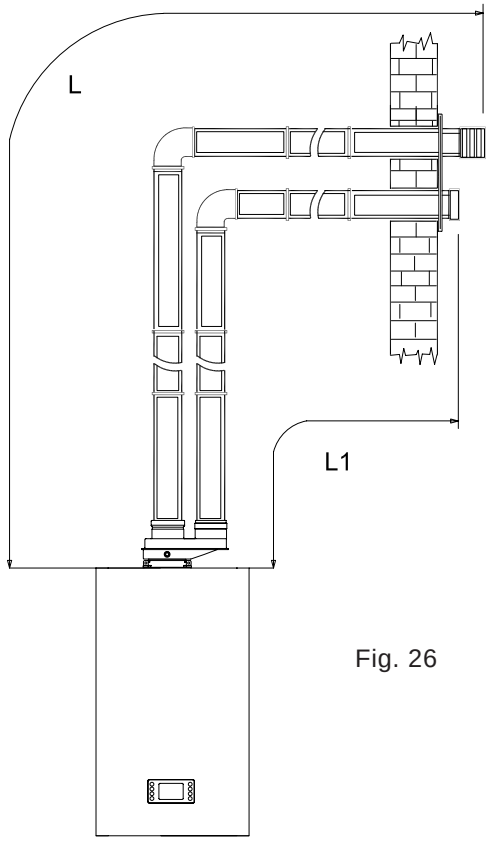

Fig. 26

L + L1= 37 m

5.15 Exhaust/suction system with concentric pipes for flat or sloping roofs. Extensions with two separate pipes (fig. 24).

Maximum distance: T = L = 21 + 21 = 42 metres + Terminal
Minimum distance: L = 0.5 + 0.5 = 1 metres + Terminal
Exhaust terminal must not be cut.
NOTE:
- If bends are used in the exhaust flue then horizontal sections must be avoided and there must be a 1.5° slope
- Towards the boiler 25 mm fall per metre.

5.16 Exhaust/suction system with with two separate rated 80 dia. pipes exhaust on flat or sloping roof, suction from vertical wall (fig. 25).

Maximum distance D = L + L1 = 39.5 metres + Terminal
Minimum total length = 2 metres
NOTE: Exhaust flue must slope 1.5° down towards the boiler 25 mm fall per metre.

5.17 Exhaust/suction system with two separate pipes through a single vertical wall (fig. 26).

Maximum distance: D = L + L1 = 37 metres
Minimum distance: D = L + L1 = 1 metres
Min distance between pipe 50 mm.

IMPORTANT: Please lubricate the internal part of the seals before fitting.

Available on request from:
RAVENHEAT MANUFACTURING LTD
Chartists way, Morley, Leeds, West Yorkshire
ENGLAND LS27 9ET - U.K.
Tel: 0113 252 7007

5.18 INSTALLATION INSTRUCTIONS FOR CONCENTRIC 80/125 FLUE SYSTEM

The vertical 80/125 flue kit is intended for use where a horizontal 60/100 flue outlet is not possible or desired.
The vertical flue can be installed on either a flat roof or a pitched roof (maximum pitch 60°).
Where a straight vertical flue is not possible or desired, an offset vertical flue can be used in conjunction with a side horizontal flue extension piece and an inline 135°/90° flue bend (fig. 27).

IMPORTANT:
- **See fig. 6 for terminal clearances.**

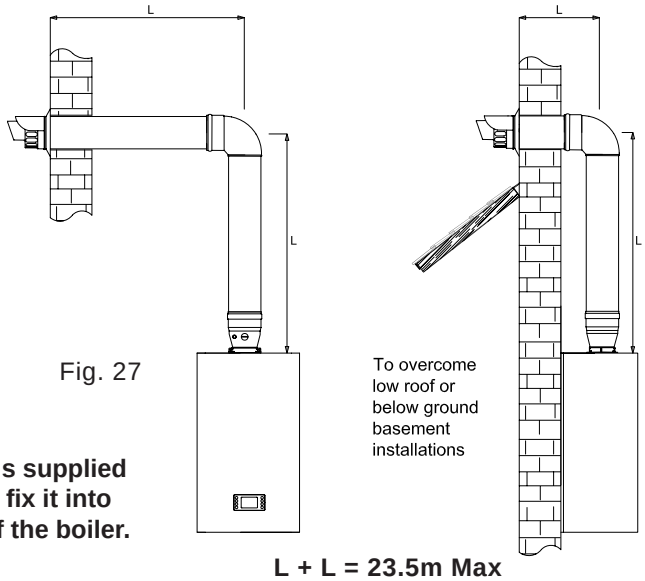

Fig. 27

L + L = 23.5m Max

IMPORTANT NOTICE:
When using our vertical flue kit the 125 mm x 100 reducer is supplied complete with the vertical terminal simply remove this and fix it into the straight flue header (which must be fitted) on the top of the boiler.

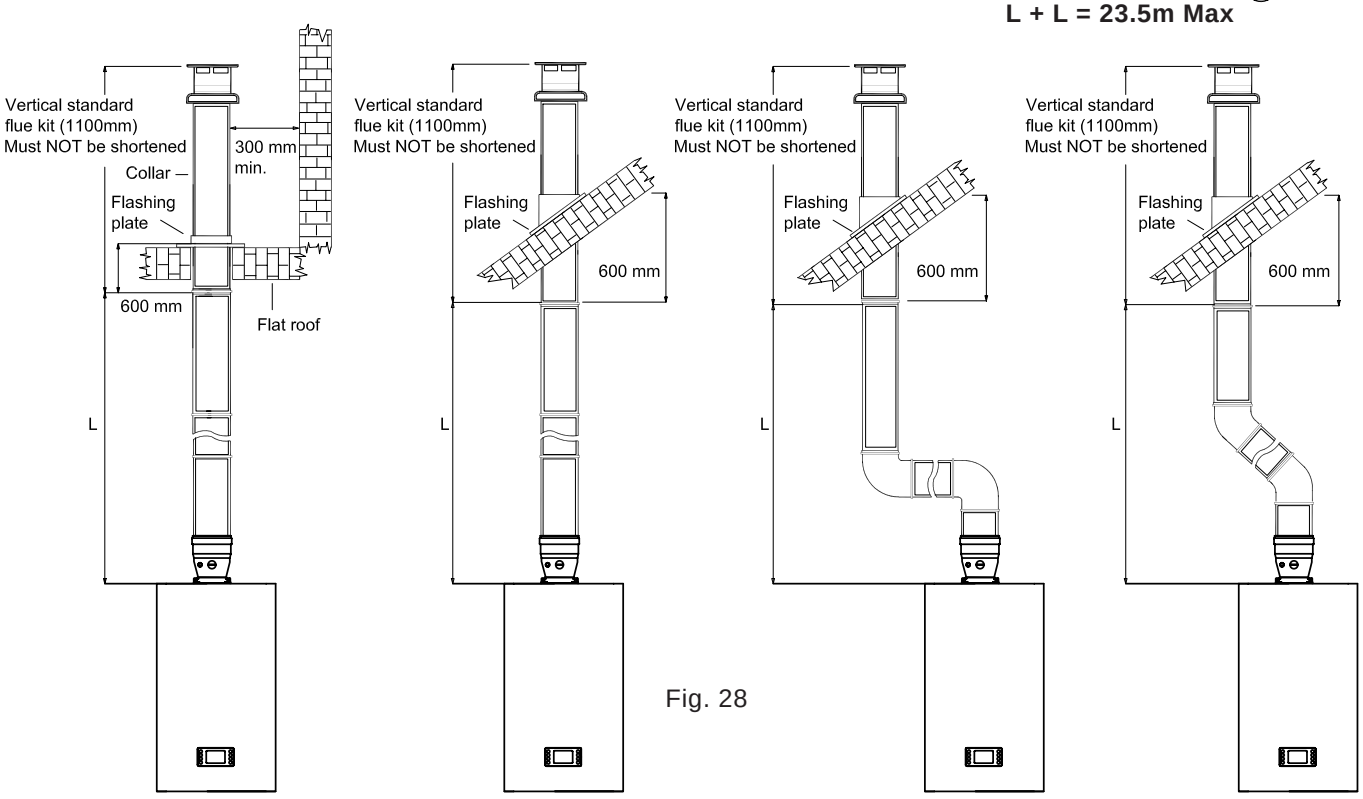

Fig. 28

Straight Flue	Straight Flue	90° Offset Flue	135° Offset Flue
L = 25 m Max	L = 20 m Max	L = 20 m Max	L = 22.5m Max
plus Terminal	plus Terminal	plus Terminal	plus Terminal

NOTE : If using Flue arrangement in fig. 27 then the 125x100 Flue reducer must be purchased separately.

TABLE 9

Part No	Description
PR5094110A	Straight flue header / sample point 60/100
PRO110300	Flue Extension 80/125 L1000
RID110050	125/80 to 100/60 Flue reducer
CUR110250	45° flue bend 80/125
CUR110300	90° elbow flue bend 80/125
TER010050	Horizontal Flue Terminal 80/125
TER110200	Vertical Flue Terminal 80/125
TEG060050	Flashing sleeve/slate

IMPORTANT: Please lubricate the internal part of the seals before fitting.

Available on request from:
RAVENHEAT MANUFACTURING LTD
Chartists way, Morley, Leeds, West Yorkshire
ENGLAND LS27 9ET - U.K.
Tel: 0113 252 7007

5.19 ASSEMBLE BOILER

5.20 Fitting valve pack

Remove plastic caps from boiler connection and fit valves as per fig. 29 using the washers provided.

It is recommended fitting the valve pack before installing the boiler on the wall.

5.21 GAS CONNECTION (Fig. 29)

A minimum working gas pressure of 20 mbar (8 in w.g.) must be available at the boiler inlet at full flow rate (37 mbar for propane).
(Also see section 4.6)
Fit the gas service cock to the boiler via the union nut and connect gas pipe. Do not over tighten and use another spanner as a counter force to avoid straining internal connections.
Important consult (sect 4.6).

5.22 CENTRAL HEATING CONNECTION (Fig. 29)

Before any central heating connections are made to the boiler all system valves should be opened and the system thoroughly flushed out with cold water.

- Connect the central heating return pipe to the isolating cock.
- Connect the central heating flow pipe to the isolating cock marked CHF.
- Pipe dimensions and positions are marked on template supplied (fig. 30).

5.23 DOMESTIC HOT WATER CONNECTION (Fig. 29)

The domestic hot water circuit does not need a safety valve but it is essential to ensure that the pressure of the cold water supply does not exceed 10 bar. If in doubt it is advisable to install a pressure reducing valve. The minimum pressure needed to operate the domestic hot water system is 0.5 bar with a flow of approx 3 L per min. Flush out all foreign matter from the supply pipe before and after connecting to the appliance.

- Connect the 15 mm. cold water pipe to the appliance inlet.
- Connect the 15 mm. hot water pipe to the appliance outlet.

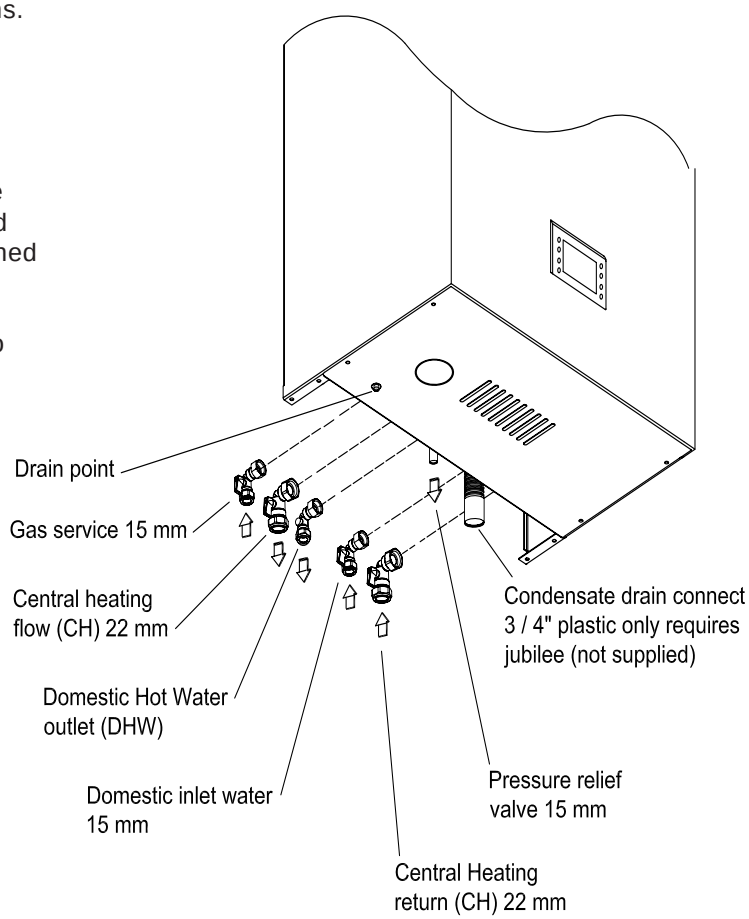

Fig.29

5.24 POSITION OF WATER/GAS CONNECTIONS

Fig. 30

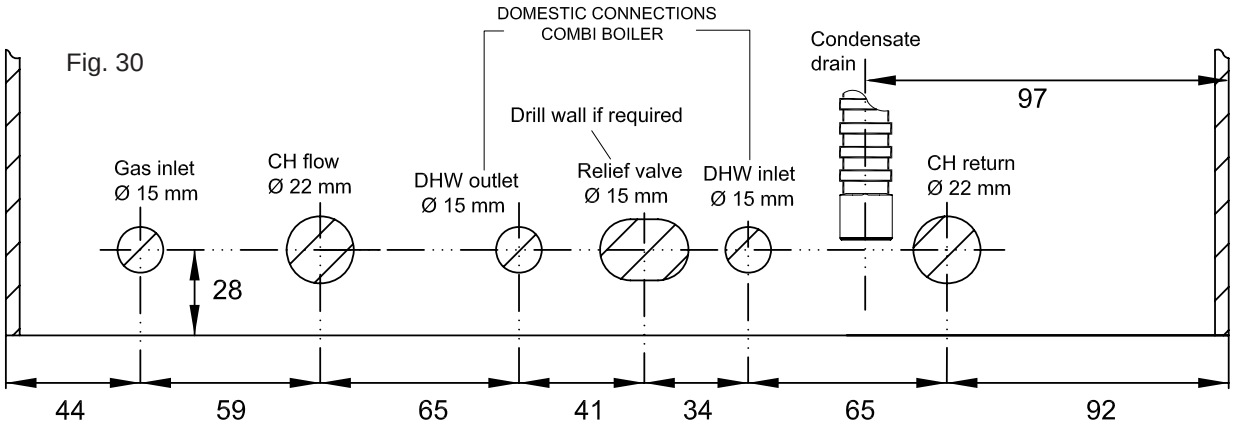

5.25 SAFETY VALVE DISCHARGE

The safety valve is located to the rear (15 mm copper) to permit a discharge pipe to be connected. When connecting ensure the discharge pipe does not restrict access. The discharge should terminate facing downward exterior to the building in a position where discharging (possibly boiling water & steam) will not create danger or nuisance, an easily visible position, and not to cause damage to electrical components or wiring. The discharge must not be over an entrance or a window or any other type of access.

5.26 CONDENSATE DRAIN CONNECTION

The condensate drain connection is a flexible 3/4” pipe and is therefore adjustable Fig. 29.

The drain pipe should have a fall of a least 2.5° away from the boiler. Condensate should, if possible be discharged into the household internal drainage system.
If this is not practicable, discharge can be allowed into the external household drains or a purpose designed soak away.
It is recommended that any external condensate drain pipe is insulated and also must be of 40 mm (1” 1/2) diameter, through the outside wall to prevent freezing in adverse weather conditions.
It is not necessary to provide air breaks or extra traps in discharge pipe as there is already a 125 mm high trap inside the boiler.
Fitting an extra trap may cause the boiler siphon to work incorrectly.
Refer to BS5546 or BS6798 for advice on disposal of boiler condensate.

Notes: ALL EXTERNAL PIPE RUNS MUST BE IN ACCORDANCE WITH BS 6798

1 - INTERNAL TO SINK WASTE UPSTREAM OF SINK WASTE TRAP

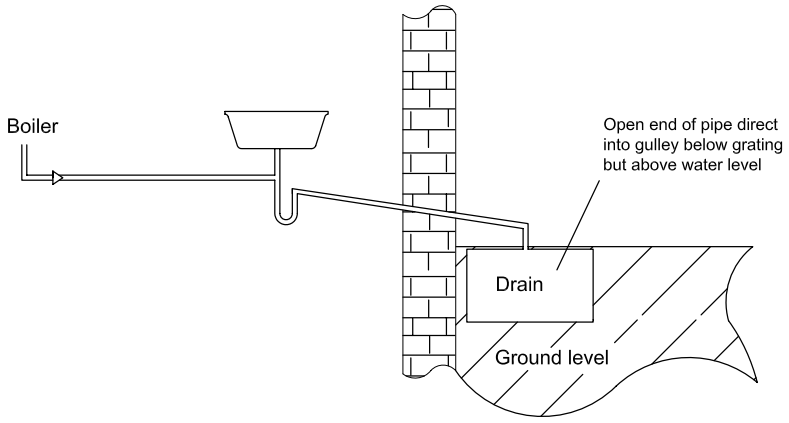

Fig. 31

2 - INTERNAL CONNECTION TO SOIL VENT STACK
Make connection to SVP using a solvent welded saddle.

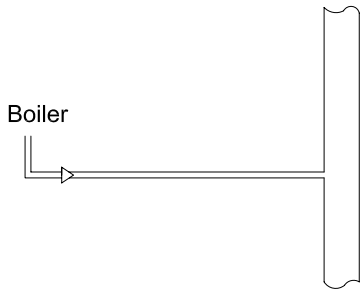

Fig. 32

3 - TERMINATION TO SOAK AWAY

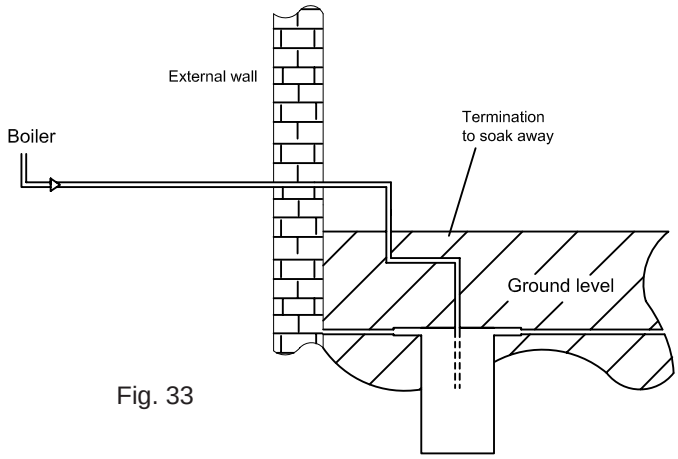

Fig. 33

4 - TERMINATION TO DRAIN / GULLY

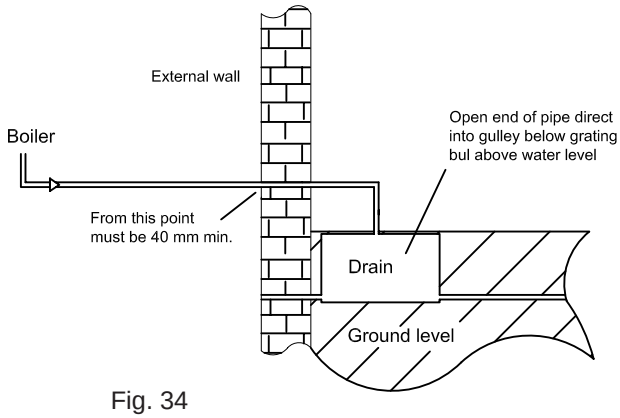

Fig. 34

5.27 CONVERTING THE APPLIANCE TO DIFFERENT GAS TYPES

Boilers are factory set to work for use with Natural gas or LPG gas. This is clearly marked on the packaging and boiler data badge.

To convert a boiler from one gas to another this operation must be carried out by a qualified competent person, with all necessary equipment authorised by the manufacturer.

It will also be necessary to obtain a data badge conversion kit directly from Ravenheat.

1 - Remove the case.
2 - Check gas mains pressure at the gas valve test nipple upstream (fig.35) with boiler operating (sect.6.8).
3 - Adjust fan speed as sect.3 (technical data).
4 - Measure the level of CO2 as in section 6.9 and table 10, and adjust to correct data settings information.
5 - Affix new data badge.
6 - Replace in reverse order.

5.28 ELECTRICAL CONNECTIONS

IMPORTANT:
Electricity supply must be as specified in clause (sect. 4.22).

- When controls external to the appliance are required, design of the external electrical circuits should be undertaken by a competent person. In accordance with the IEE wiring regulations.

It is essential that all external controls are VOLT FREE.

Factory fitted internal wiring must not be disturbed when wiring external controls.

- To gain access to the electrical box remove the front panel of the case as described in clauses sect. 8.2.
  You can slide towards the top the instrument panel box and push the retaining latches and remove the instrument panel (sect. 8.24).
- Heat resistant flexible cable is fitted between the isolator and the terminal block which is a 3 core cable of 0.75 mm^2 (24x0,2 mm) to BS 6500.

Make sure all wires to the appliance are routed away from sharp edges and hot surfaces.
The cable must be fastened with its cord anchorage and connected so that it should make the cable slip from the anchorage until the current carrying conductors become taut before the earthing conductor.
Securely tighten all terminal screws and arrange the cable with slack between the cord anchorage and the terminal block.

WARNING:
If the supply cord is damaged, it must be replaced by a service engineer (supply cord available from Ravenheat).

5.29 OUTDOOR SENSOR

For use, consult Outdoor Sensor instructions.

6 COMMISSIONING

Each boiler has been through a rigorous operational testing procedure at our factory and should not require any further adjustment, if you are not the installer but just commissioning this boiler check that the boiler has been installed in accordance with these instructions, and the integrity of the flue system and the flue seals, as described in the flue installation section.

6.1 GAS SUPPLY INSTALLATION

Inspect the entire installation including the gas meter, test for soundness and purge, all as described in BS 6891.
In Ireland refer to IS 813:2002.

6.2 ELECTRICAL INSTALLATION

Preliminary electrical systems checks to ensure electrical safety shall be carried out by a competent person.
ALWAYS carry out the preliminary electrical system checks:
i.e. earth continuity, polarity, resistance to earth and short circuit, using a suitable test meter.

6.3 INITIAL FILLING OF THE SYSTEM

Open central heating flow and return valves Unscrew the cap on automatic air release valve positioned on the top of the pump housing one full turn (leave open permanently).

- Close all air release taps on the central heating system. Press the P button to display the current pressure (code E8 will display if the pressure is nil/too low).
- Gradually open stopcock at the filling point connection to the central heating system until water is heard to flow.
- Starting with the lowest radiator open each air release tap in turn. Close when the water is clear, free of bubbles and flows out. In the same way release air from any high points in the pipework.
- Continue filling the system until 1.5 bar register on digital display. Press the P button once again to return to the main screen.

Then turn off the filling points stopcock.

- Inspect the system for water soundness and remedy any leaks discovered.

6.4 SETTING THE HEATING SYSTEM DESIGN PRESSURE

The design pressure must be a min. 1bar and max. 1.5 bar. These figures are read on the digital display by pressing the P button. The actual reading should ideally be 1 bar + the height in metres to the highest point of the system above the base of the appliance (up to max of 1.5 bar).

N.B.: The safety valve is set to lift at 3 bar (30 m/42.5 psi).
To lower the system pressure to the required value remove at the drain point (fig. 36) or drain on the heating circuit.

6.5 FILLING THE HOT WATER SYSTEM

Close all hot water draw-off taps.
Open the cold water inlet cock.
Slowly open each draw-off tap until clear water is discharged.

6.6 LIGHTING THE BOILER

Before lighting the boiler make sure that the heating circuit flow and return valves are open and also that the cold water input cock is open.

- If external controls are installed (E.g. time clock and thermostat) make sure that they are calling for heat.
- Select winter function, the winter icon in digital display will be flashing (item 3 fig. 2).
- To select the minimum heating temperature press the radiator button.

IMPORTANT:
Before lighting the boiler select the minimum central heating temperature. This must be left at minimum for approx 5 mins to purge air safely from the boiler.

GAS VALVE

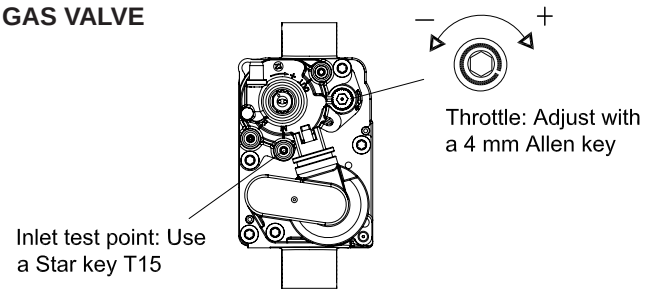

Fig. 35

Fig. 36

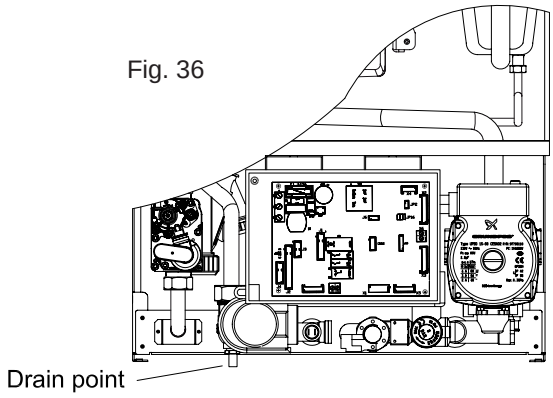

- To select the minimum heating temperature press the radiator button.
- Press arrow up and arrow down buttons to adjust.
- The digital display shows the current set temperature in central heating.
- After a few seconds the digital display shows the central heating temperature in demand (C.H. icon flashing, item 3 fig. 2).
- The fan starts and after a few seconds or so the digital led display will show that the ignition has commenced.
- **NOTES: Put the digital clock in demand position.**
- The ignition control will automatically make three attempts to start, if it doesn't start this may be due to air in the gas supply line. If the burner fails to light, the digital led display and fan will stop, and the display will show the lockout code (E1 depicts flame failure).
- If necessary push the boiler Reset button (item 2 fig.1) and the boiler will restart automatically.
- After the boiler has lit, allow to warm at minimum temperature setting to purge any air from the system.
- Once the system has been purged of air, set the heating temperature to the desired setting.

6.8 CHECK THE GAS PRESSURE

Check the gas mains pressure at the gas valve inlet pressure test point (fig.35) with the boiler operating at full rate.
Check with the Local Gas supplier if the pressure differs significantly from 20 mbar G20 (natural gas), 37 mbar G31 (propane).
With leak detection fluid test for gas tightness of all gas components and joints.
IMPORTANT:
The Gas Valve Throttle adjuster is required to be sealed with tamper proof paint after adjustment (fig. 35).

6.9 COMBUSTION CHECK

Check all gas carrying components along with, the combustion of the appliance which should be checked as follows.
Remove the front panel of the appliance.
Ensure the boiler and external controls are calling for heat. Turn on the electrical supply.
open the hot water tap at maximum flow rate.
Wait at least five minutes or until the unit has reached its operating temperature.
Unscrew the test sample screw on the boiler elbow bend (item 60 fig. 10). Measure the level of CO_2. Check the reading against the corresponding value in table 10 and with reference to page 63.

It is essential that this test is repeated with the casing on as this will check the integrity of the flue.

If adjustment proves necessary then proceed as follows.

IMPORTANT: Any adjustment to the gas valve should only be carried out by a qualified person.
Referring to the table 10, adjust the maximum level of CO_2 with the Throttle using a 4 mm hex on the gas valve (fig.35).
Anti-clockwise to decrease CO_2.
Clockwise to increase CO_2
After any new regulation wait to stabilise for about one minute. Replace the front cover.

TABLE 10

	CO2 %
NAT GAS	9.0 (+0.5 / -0.5)
LPG	10.5 (+0.5 / -0.5)

IMPORTANT: Do not insert the analyser probe into the sample point immediately or leave in long periods. This will prevent saturation of the analyser.

During the calibration function the combustion ratio may increase for a short time while the boiler performance is optimised.

The person carrying out a combustion measurement should have been assessed as competent in the use of a flue gas analyser.

The flue gas analyser used should be one meeting the requirements of BS7927 or BS-EN50379-3 and be calibrated in accordance with the analyser manufacturer's requirements.

ELECTRODES POSITION

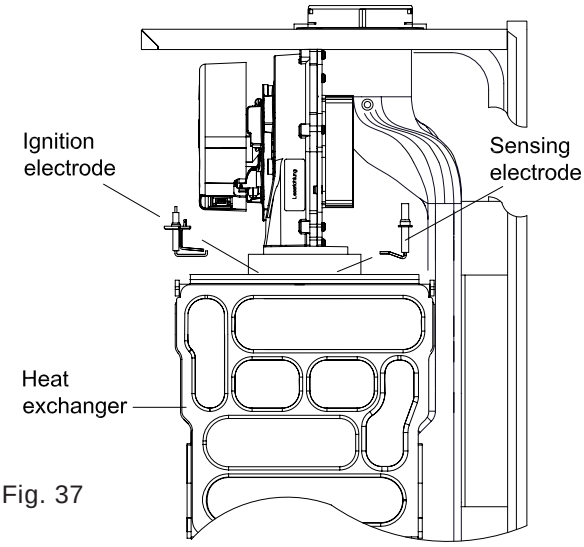

Fig. 37

ATTENTION
IT IS A CONDITION OF THE MANUFACTURERS WARRANTY THAT THE BENCHMARK COMMISSIONING CHECKLIST IS FULLY COMPLETED AND LEFT WITH THE APPLIANCE

Once the process of commissioning the boiler is complete, the commissioning engineer MUST complete the relevant section in the Benchmark log book.

6.10 CHECKING THE FLUE SYSTEM

The flue system should be visually checked for soundness. Check all connections and fixings are secure and tight.

6.11 CHECKING THE HEATING THERMOSTAT

Allow the system to warm up and then select the C.H thermostat to ensure the main burner modulates from “high” to “low” and “low” to “off” and vice versa (scale range covers approx. 35 °C - 80 °C, sec 1.5 key 5 to set heating temperatures).

6.12 TESTING AND REGULATING THE DOMESTIC HOT WATER SYSTEM FLOW AND CHECK THE OPERATIONAL (WORKING) INLET PRESSURE

Set up the boiler to operate at maximum rate by opening the hot tap to maximum flow.
With the boiler operating at the maximum rate check the operational dynamic (working) gas pressure test complies with the requirements.
Ensure that this inlet pressure can be obtained with all other gas appliances in the property working.

Put the appliance in summer position (item1 fig. 1).

- Open a domestic hot water tap (preferably the bath tap). Ensure the cold water inlet stopcock is open and the D.H.W. is set at maximum, press the arrow up (item 3 fig. 1) the digital display shows the set temperature, if necessary adjust with arrow up and arrow down buttons.
- After a few seconds the digital display shows water temperature in demand (D.H.W. icon flashing, item 12 fig. 2).
- If the boiler does not light check that the water flow rate is above the min. required to operate the differential pressure 2.8 L/min. (0.61 gals/min).
- The temperature of the water will depend on the rate at which it flows. If, due to high water pressure, the flow rate is too high (and the temperature too low for practical use) the flow rate may be adjusted.
  It is better to set for the lowest acceptable temperature preferably at the bath tap since the user can gain higher temperatures at other restricted flow taps.
- If the cold supply is subject to large fluctuations or is above the permitted max. water pressure, a suitable pressure/flow regulator should be fitted on the cold water supply to the appliance.
- Slowly close the draw off tap to reduce the flow rate to the min (approx. 2.8 L/min).
- Select a different temperature for D.H.W. to ensure it operates at its various setting.
- Close the draw-off tap still further. The burner should stop when the rate falls below about 2.8 L/min (0.61 gals/min).

6.13 KEEP HOT

The boiler comes with an optional keep hot facility.
This can be switched on by a competent person.
This will result in the boiler, at any time, periodically firing to keep the water within the boiler up to temperature to reduce the time delay of hot water delivered to any hot draw off point.

- Press P button (item 8 fig. 1) for 3 seconds to enter in menu.
- Use arrow up and arrow down buttons (item 5 and 6 fig. 1), to select BOIL.
- Press reset and the up arrow button together (item 2 and 3 fig. 1) and then press the enter button.
- Use arrow up and arrow down buttons (item 3 and 4 fig. 1) to select the following option:
- PM3 Keep hot (“0” disabled, “1” enable). Adjust if necessary.

6.14 C.H. HIGH/LOW TEMPERATURE

The boiler comes set, in Central heating, at the 80°C flow temperature.
It is possible to adjust the max set-point to max 50°.

- Press P button (item 8 fig. 1) for 3 seconds to enter in menu.
- Use arrow up and arrow down buttons (item 3 and 4 fig. 1), to select BOIL.
- Press reset and the up arrow button together (item 2 and 3 fig. 1) and then press the enter button.
- Use arrow up and arrow down buttons (item 3 and 4 fig. 1) to select the following option:
- PM4 (“1” high temperature, “2” low temperature).

6.15 RANGE RATING CENTRAL HEATING OR/AND DOMESTIC HOT WATER

The boiler comes set, in Central heating, at the MID RANGE of its output.

The boiler has already been adjusted by the manufacturer during production. If the adjustments need to be made again, observe the following procedures.
The adjustment to fan speed must be strictly in the sequence indicated, by qualified personnel only.

To check max fan speed, see tables 11/A and 11/B:

- Press P button (item 8 fig. 1) for 3 seconds to enter in menu.
- Use arrow up and arrow down buttons (item 3 and 4 fig. 1), to select BOIL.
- Press reset and the up arrow button together (item 2 and 3 fig. 1) and then press the enter button.
- Use arrow up and arrow down buttons (item 3 and 4 fig. 1) to select the followings options:
- PM1 CH max fan speed.
- PM2 DHW max fan speed.
- Press enter (item 1 fig. 1) to select CH or DHW fan speed.
  Adjust if necessary.

TABLE 11/A

Range rating regulation of Central Heating				
C.H. regulations	Heat input (kW)		Fan speed (rpm)	
	CS 80	CS 90	CS 80	CS 90
Maximum setting	20	24,5	4200	4200
Minimum setting	3,7	4,1	1300	1300

TABLE 11/B

Range rating regulation of Domestic Hot Water				
D.H.W. regulations	Heat input (kW)		Fan speed (rpm)	
	CS 80	CS 90	CS 80	CS 90
Maximum setting	25,4	30,1	4800	4800
Minimum setting	3,7	4,1	1300	1300

RATIO BETWEEN FAN SPEED AND HEAT INPUT

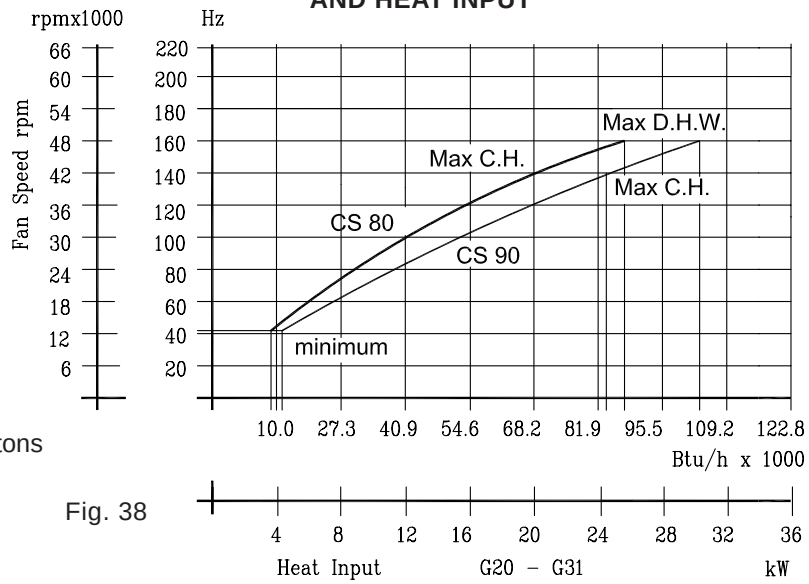

Fig. 38

6.16 TEST MODE

It is possible to activate the test mode function by pressing the arrow up and the arrow down buttons, (item 3 and 4 fig. 1) for 5 seconds.
Press the arrow up and the arrow down buttons to set the maximum or minimum fan speed.
The function is enabled for maximum 15 minutes and it has priority on D.H.W. mode.
Press reset to esc test mode.

6.17 INSTRUCTING THE USER

After completion of the installation and commissioning of the system, the installer should hand over to the Householder by taking the following actions:

- To the Householder explain his/her responsibilities under the “Gas Safety Regulations 2000”.
- Explain and demonstrate the lighting and shutting down procedures.
- Show the user the location of the filling valve and how to top-up the system pressure correctly.
- Explain the operation of the boiler including the use and adjustment of ALL system controls which should be fully explained to the Householder. This will ensure the optimum fuel economy for the household requirements of both heating and hot water consumption. Advise the User of the precautions necessary to prevent damage to the system, and to the building, in the event of the system remaining inoperative during frost conditions.
- Explain the function and the use of the boiler, the summer/winter button, the ON/OFF switch and the reset of the digital display.
- Explain and demonstrate the function of the temperature controls, radiator valves etc. for the economic use of the system.
- If an external time clock is fitted, then draw attention to the digital time.
- Stress the importance of regular servicing by a qualified Heating Engineer and that a comprehensive service should be carried out AT LEAST ONCE A YEAR.
- Fill in the Benchmark log book and leave completed with the customer.
- Explain to the user how to isolate the appliance from the gas, water and electricity supplies and the locations of all drain points.

7 SERVICING INSTRUCTIONS

Ravenheat is a member of the Benchmark initiative and fully supports the aims of the programme.
Benchmark was instructed to improve the standards of installation and commissioning of central heating systems in the UK and to encourage the regular servicing of all central heating systems to ensure safety and efficiency.

Combustion testing must be carried out by competent person using a combustion analyser conforming to BS7927.

During routine servicing, and after any maintenance or change of part of the combustion circuit, the following must be checked:

- The integrity of the flue system and the flue seals.
- The integrity of the boiler combustion circuit and the relevant seals.
- The operational dynamic (working) gas inlet pressure at maximum rate.
- The gas rate.
- The combustion performance (Refer to table 10 and page 64).
- Check all joints and connections in the appliance and remake any that show signs of leakage.

NOTE:
Service consumables are not covered by the warranty.
To view warranty exclusions please visit www.ravenheat.co.uk
or contact us on 01132 527007.

COMPETENCE TO CARRY OUT THE CHECK OF COMBUSTION PERFORMANCE.

Please note: BS6798:2009 Specification for installation and maintenance of gas-fired boilers of rated input not exceeding 70 kW net advises that:

- The person carrying out a combustion measurement should have been assessed as competent in the use of a flue gas analyser and the interpretation of the results.
- The flue gas analyser used should be one meeting the requirements of BS7927 or BS-EN 50379-3 and be calibrated in accordance with the analyser manufacturers requirements.
- Competence can be demonstrated by satisfactory completion of the CPA1 ACS assessment which covers the use of electronic portable combustion gas analysers in accordance with BS 7967, Parts 1 to 4.

7.1 BOILER FROST PROTECTION

The appliance has a built in frost protection device that protects the boiler from freezing. With the gas and electric supplies ON and irrespective of any room thermostat setting, the frost protection device will operate the pump when the temperature falls below 10 °C and will operate the burner when the temperature falls below 5°C.
The burner will switch off when the temperature reaches 27 °C. When the frost protection device operates “AF” is displayed on the digital display.

IMPORTANT NOTE:

The system should be protected by incorporating a system frost thermostat.

To ensure continued efficient operation of the appliance it is necessary to carry out servicing and cleaning at regular intervals.
The frequency of servicing and cleaning will depend upon the particular installation conditions and usage but in general, once a year is advisable.

WARNING:
Before the start of any servicing or replacement of components always isolate the electricity supply to the appliance and always turn off the appliance gas supply at the gas service cock.

The data badge is positioned low on the inside left panel.

- The following notes apply to the appliance and its controls but it should be remembered that attention must also be paid to the heating and hot water circuits with special attention to radiator valves, thermostats, clocks, leaking hot water taps etc.
- Where it is necessary to replace a gasket that relies on adhesive for securing - this adhesive will be supplied with the gasket as a spare item.
- In all cases prior to servicing, remove the front panel of the case. Operate the appliance by turning the hot water services on to a high water flow. Measurement of the products of combustion can be achieved by connection of a probe to the combustion analyser test point.

- **IMPORTANT:**
After completing any servicing or replacement of gas carrying components it is essential that a test for gas soundness is always carried out along with functional checks in operation.

7.2 TO INSPECT AND CLEAN THE APPLIANCE

Before carrying out the cleaning operation, cover the electrical control panel with a piece of waterproof material to protect it from debris.
Inspect the heat exchanger for any blockage. Deposits of any material should be brushed away using a soft brush.

NOTE: Do not use brushes with metallic bristles.

Examine internal pipe-work connections and automatic air vent for any water leaks and rectify if necessary.
Examine and remove loose debris from the combustion chamber using a soft brush and vacuum cleaner. Carefully flush, by spraying water at any remaining debris through the condensate trap.
(Ensure the water is kept away from electrical components).

Inspect the siphonic condensate trap for a blockage. Remove the cap at the base of the condensate trap. Remove any debris found. Remove the float to clean it. Any deposits should be flushed out. Reassemble and refit the condensing trap.
When refitting the cap ensure that a watertight seal is achieved, but do not use excessive force.
Examine the spark and sensing electrodes for any mechanical damage. Clean away any debris and check the spark and sensing gap.

Examine flue duct and flue manifold and ensure that there is no obstruction.
Examine the gasket at the entry into the flue manifold.

It is essential that a good seal is made at the outlet to the flue manifold, renew this gasket if there is any sign of damage or deterioration.

8 REPLACEMENT OF PARTS

8.1 GENERAL

Replacement of parts must be carried out by a competent person.

Before replacing any parts the boiler should be isolated from the mains electric supply and the gas should be turned off at the service cock on the boiler.

After replacing any parts always test for gas soundness and if necessary carry out functional test of the controls.

For replacement of parts, the front, and bottom panels of the boiler will need to be removed (it is not necessary to remove the side panels as all parts are accessible from the front or beneath the boiler).

8.2 TO REMOVE THE BOILER PANELS

To remove the front panel unscrew the two lower screws that secure the front panel to the boiler and lift off.

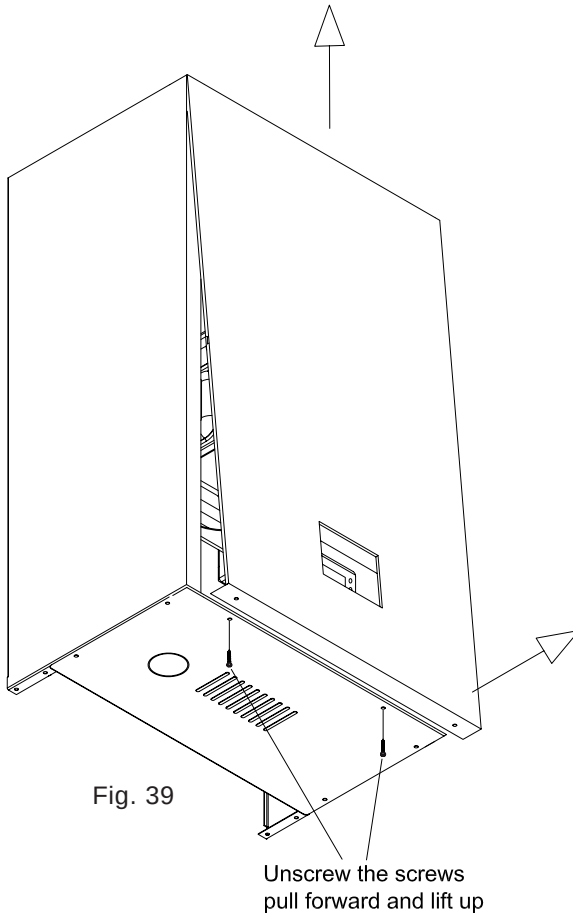

Fig. 39

8.3 TO REMOVE LEFT AND RIGHT PANELS (Fig. 40)

Remove the front panel (fig. 39).
Unscrew the four screws to the bottom panel.
Unscrew the two screws to the side panel and pull.

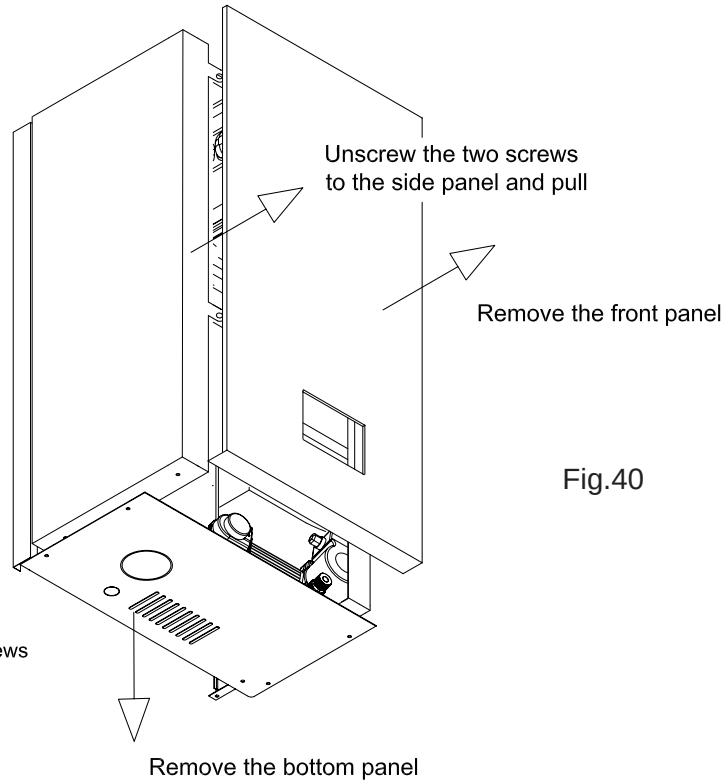

Fig.40

8.4 TO REMOVE/REPLACE SPARK IGNITER BOX (Fig. 41)

Remove the front panel (fig. 39).
Detach all the connectors from the igniter control box.
Remove the 2 screws that secure the spark igniter to the bracket.
Replace in reverse order.

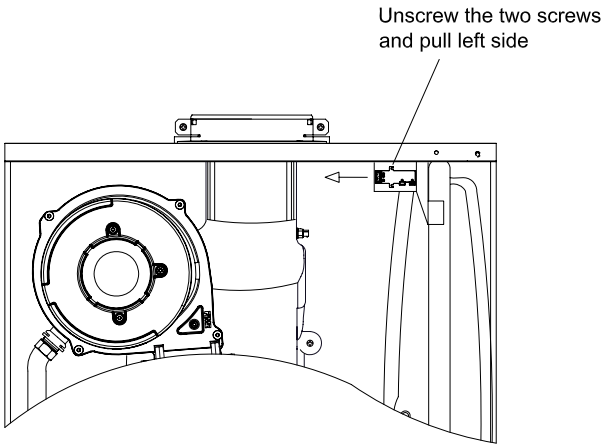

Fig.41

8.5 TO REMOVE/REPLACE FAN (Fig. 42)

Remove the front panel (fig. 39).
Unscrew the gas pipe nut and remove the retaining clip. Detach the connectors from the fan.
Unscrew the four screws that fix the fan and remove only the right screws.
Pull the fan to the right and pull forward.
Replace in reverse order (always fitting a new gasket).

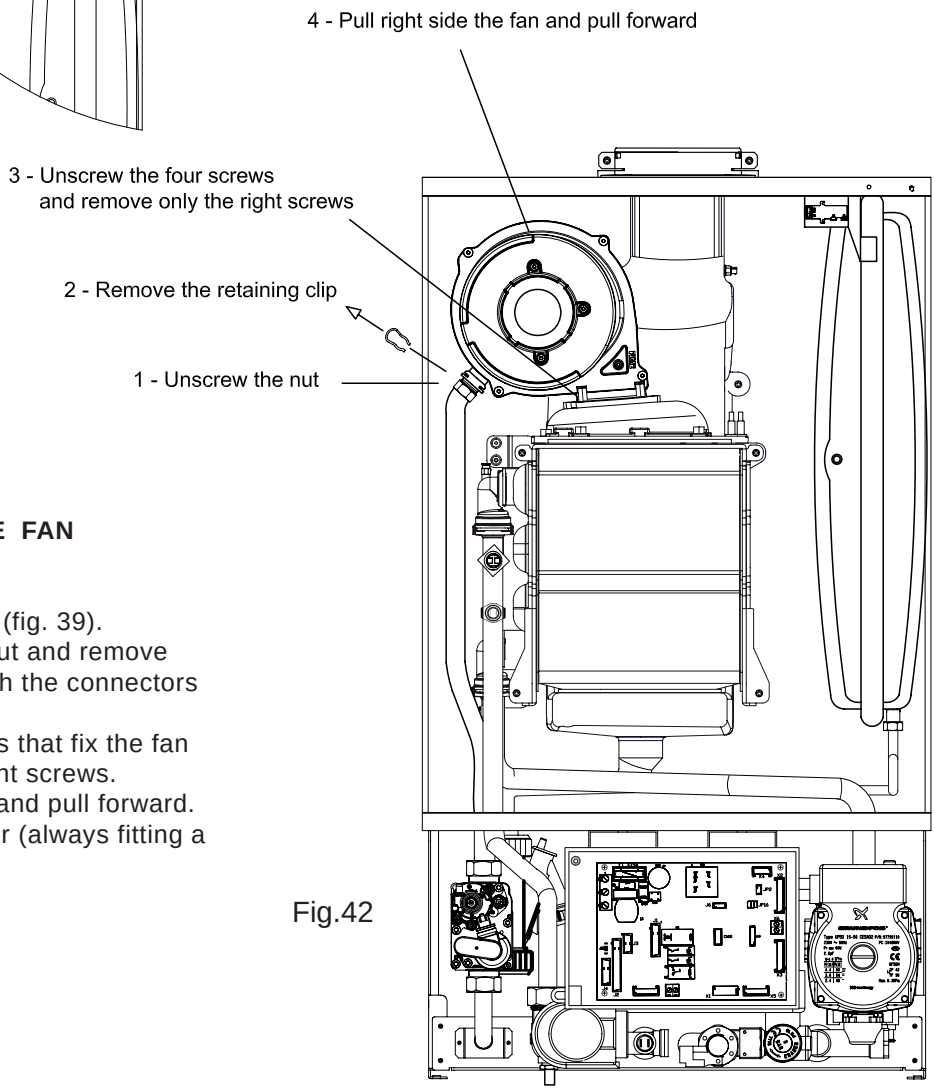

Fig.42

8.6 TO REMOVE/ REPLACE THE ELECTRODES (Fig.37)

Remove the front panel (fig. 39).
Remove the ignition and/or sensing lead plug.
Unscrew the two securing screws and put them into a suitable container so that they don't get lost.
Withdraw the Spark electrode and/or Sensing electrode carefully from the burner cover being careful not to damage the seal.
Replace with a new electrode in reverse order. Ensure the gap is correct and there is a good seal when replaced (always fitting a new gasket).

8.7 TO REMOVE/REPLACE THE BURNER (FIG.43)

Remove the front panel (fig. 39).
Unscrew the gas pipe nut and remove the retaining clip. Detach the connectors from the fan.
Unscrew the screws to the burner cover and remove the cover with the fan.
To remove the burner, unscrew the screws in the lower cover side.
Replace in reverse order (always fitting a new gasket).

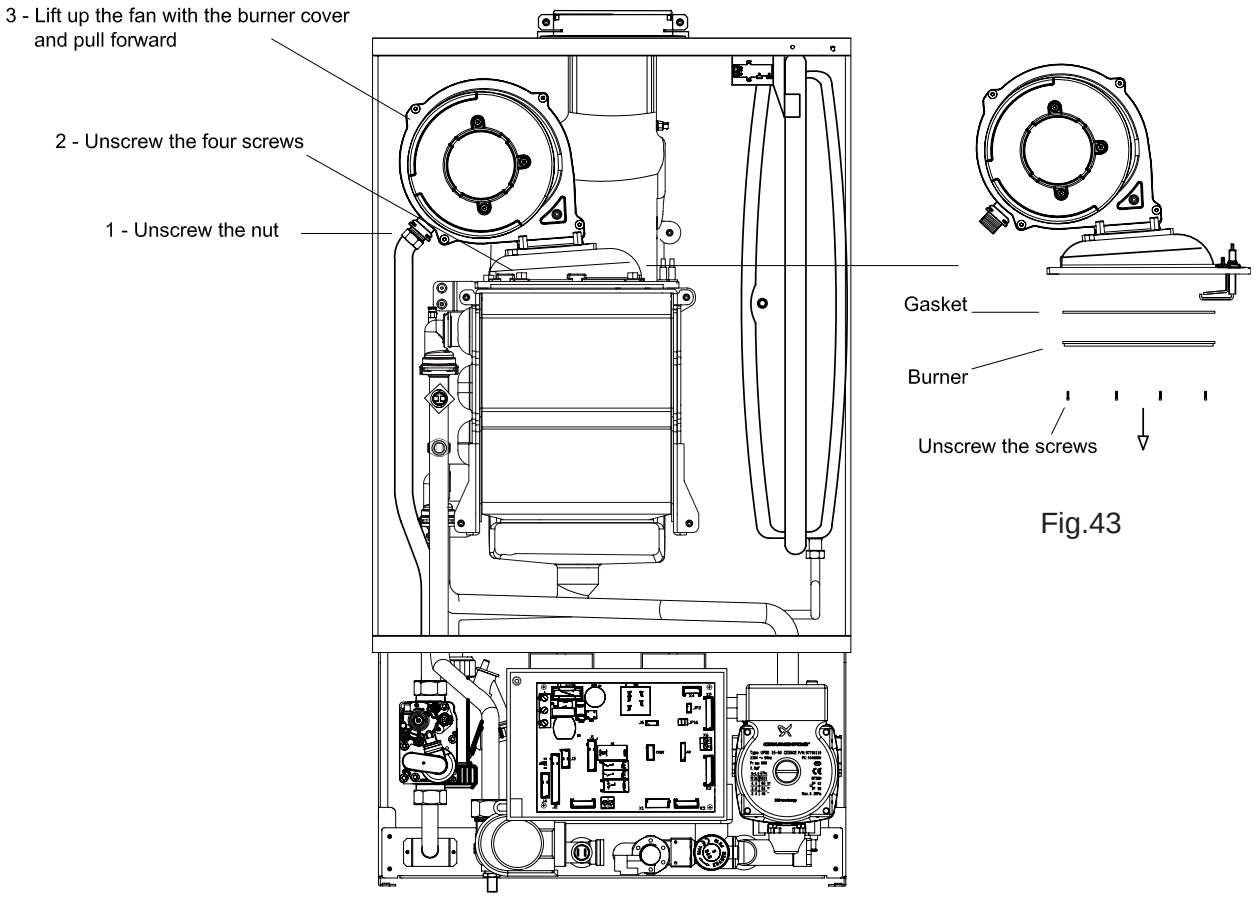

Fig.43

8.8 TO REMOVE/REPLACE THE MAIN HEAT EXCHANGER

Remove the front and bottom panels (fig. 39-40).
Drain the boiler CH circuit and drain the DHW circuit. Follow the instructions to remove the burner (sect. 8.7). Pull down to remove the condense pipe on the bottom of the heat exchanger. Disconnect the flow and return pipes at the heat exchanger.
Loosen the four heat exchanger securing screws and clamps then carefully ease the heat exchanger out.

CAUTION : There will be water in the heat exchanger.

Replace in reverse order, always use new O-ring seals.

8.9 TO REMOVE/REPLACE EXPANSION VESSEL (Fig.44)

Remove the front and bottom panels (fig. 39-40).
Close the on/off valves for the heating circuit and drain the water at the drain point (fig.36). Unscrew the fixing bracket and the nut connecting the expansion vessel. Lift up the vessel and remove.
Replace in reverse order. Use a new gasket, taking care to ensure they are replaced correctly.

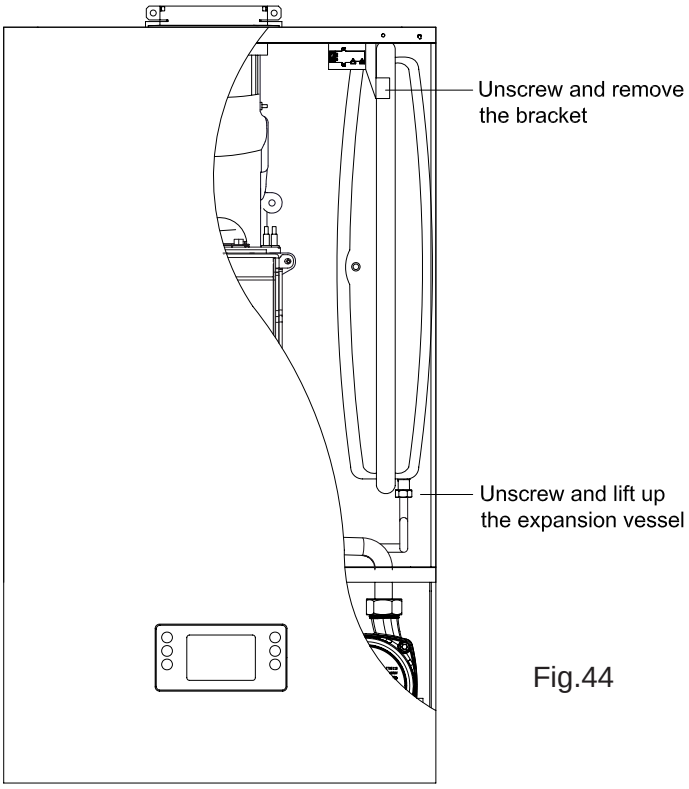

Fig.44

8.10 TO REMOVE/REPLACE GAS VALVE (Fig. 45)

Remove the front and bottom panels (fig. 39-40).
Unscrew the nut and the four screws on the bottom of the gas valve.
Replace in reverse order.

IMPORTANT:
when the gas valve is re-fitted, **check combustion CO_2 and adjust if necessary (see section 6.9).**

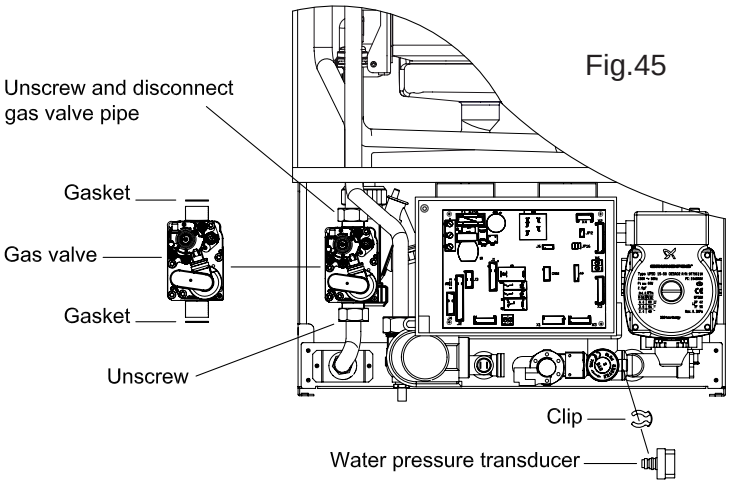

Fig.45

8.11 TO REMOVE/REPLACE PLATE HEAT EXCHANGER (Fig. 46)

Remove the front and bottom panels (fig. 39-40).
Remove the panel control box (sect. 8.23).
Close off the on/off valves for CH circuit and DHW circuit and drain the boiler and drain hot water from the lowest hot water tap.
Unscrew the two allen screws that connect the DHW heat exchanger and pull it out from the boiler (fig. 46).
If necessary the pipes from the flow manifold may have to be removed for easier access. Lift up the plate heat exchanger.
Replace in reverse order.
NOTE: Always use new O-rings.

8.12 TO REMOVE/REPLACE THE WATER PRESSURE TRANSDUCER (Fig. 45)

Remove the front and bottom panels (fig. 39-40).
Close the on/off valves for the heating circuit and drain the water at drain point (fig.36).
Detach the wire connector, remove the securing clip.
Replace in reverse order.

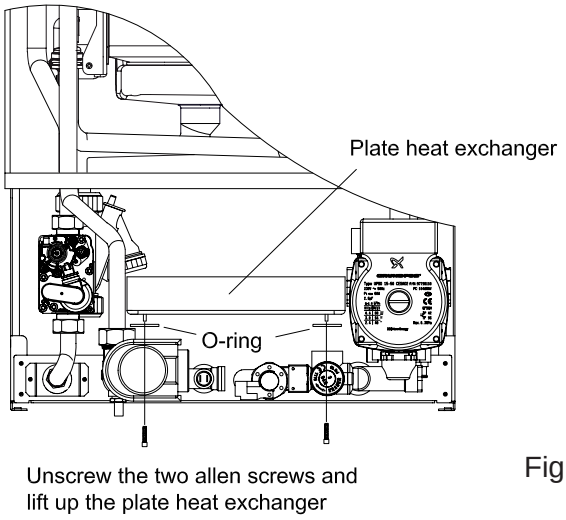

Fig.46

8.13 TO REMOVE/REPLACE DIVERTER VALVE MOTOR (Fig. 47)

Remove the front and bottom panels (fig. 39-40).
Detach the electrical plug and remove the retaining clip. Replace in reverse order.

8.14 TO REMOVE/REPLACE C.H. DIVERTER VALVE (Fig. 47)

Remove the front and bottom panels (fig. 39-40).
Remove the panel control box (sect. 8.23).
Close the on/off valves for the heating circuit and drain the water at drain point (fig.36).
Remove diverter valve motor switch, to allow access and unscrew the C.H.diverter valve (fig.47).
Replace in reverse order.
NOTE: Always use new O-ring.

8.15 TO REMOVE/REPLACE D.H.W. DIVERTER VALVE MECHANISM (Fig. 47)

Remove the front and bottom panels (fig. 39-40).
Remove the panel control box (sect. 8.23).
Close the on/off valves for the heating circuit and drain the water at drain point (fig.36).

Remove flow detector and unscrew DHW diverter valve.
Replace in reverse order.
NOTE: Always use new O-ring.

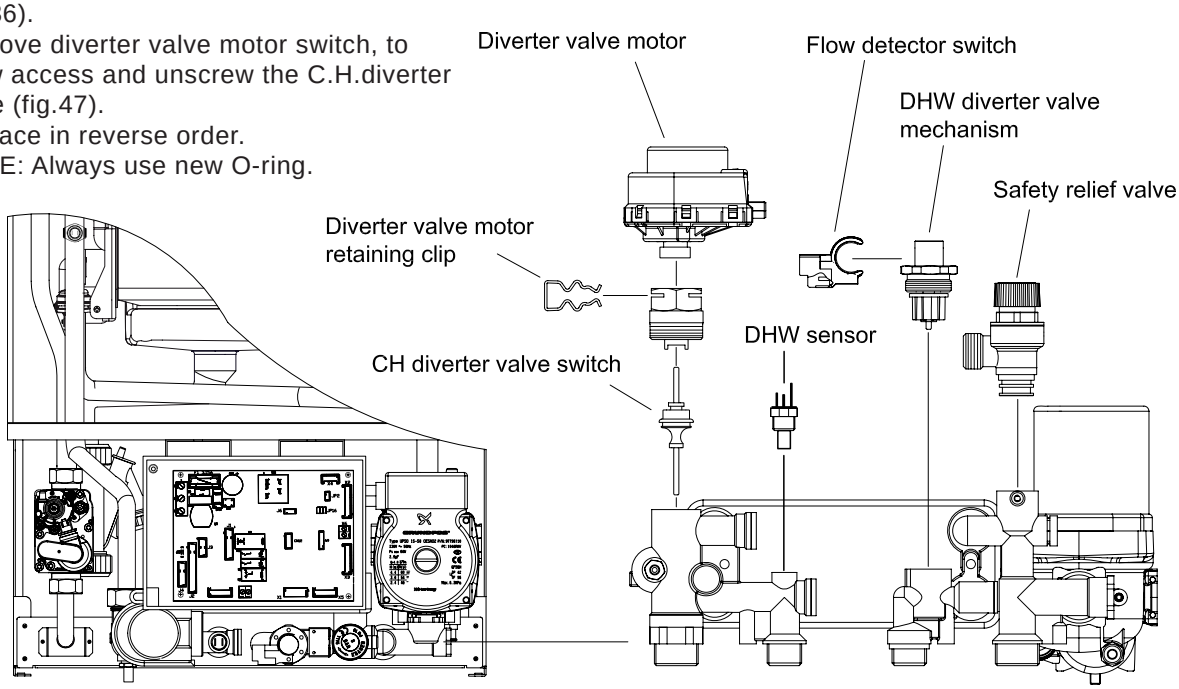

Fig.47

8.16 TO REMOVE/REPLACE PUMP (Fig.48)

Remove the front and bottom panels (fig. 39-40).
Close the on/off valves for the heating circuit and drain the water at drain point (fig.36).
Detach the supply wire connector from the pump.
Unscrew the nut that fastens the pump to the CH pipe and remove the pump and remove the securing clip at the pump manifold.
Replace in reverse order.
NOTE: Always use new O-ring.

8.17 TO REMOVE/REPLACE AUTOMATIC AIR VENT (Fig. 48)

Remove the front and bottom panels (fig. 39-40).
Remove the panel control box (sect. 8.23).
Close the on/off valves for C.H. circuit and drain the water from at drain point Fig.36.
Remove the clip and pull the automatic air vent from the pump.
Replace in reverse order.
NOTE: Always use new O-ring.

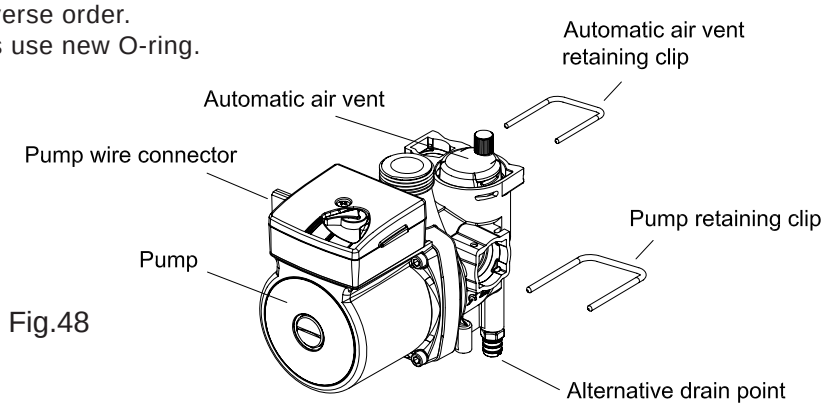

Fig.48

8.18 TO REMOVE/REPLACE SAFETY RELIEF VALVE (Fig. 47)

Remove the front and bottom panels (fig. 39-40).
Close the on/off valves for C.H. circuit and drain the water from at drain point fig.36.
Unscrew the safety relief valve screw and pull up.
Replace in reverse order and using a new gasket.

8.19 TO REMOVE/REPLACE D.H.W. SENSOR (Fig. 47)

Remove the front and bottom panels (fig. 39-40).
Close the on/off valve for the DHW circuit and drain the hot water from the lowest hot water tap.
Detach the wire connector and unscrew the sensor.
Replace in reverse order.

8.20 TO REMOVE/REPLACE C.H. FLOW AND RETURN SENSORS (Fig. 49)

Remove the front panel (fig. 39).
Detach the wire connector and remove the retaining clip sensor from the pipe.
NOTE: When reconnecting ensure the correct wires go to the relevant sensor (the polarity on each one is unimportant).

8.21 TO REMOVE/REPLACE FLUE SENSOR (Fig. 3 item 22)

Remove the front panel (fig. 39).
Detach the wire connector and rotate the sensor.
Replace in reverse order.

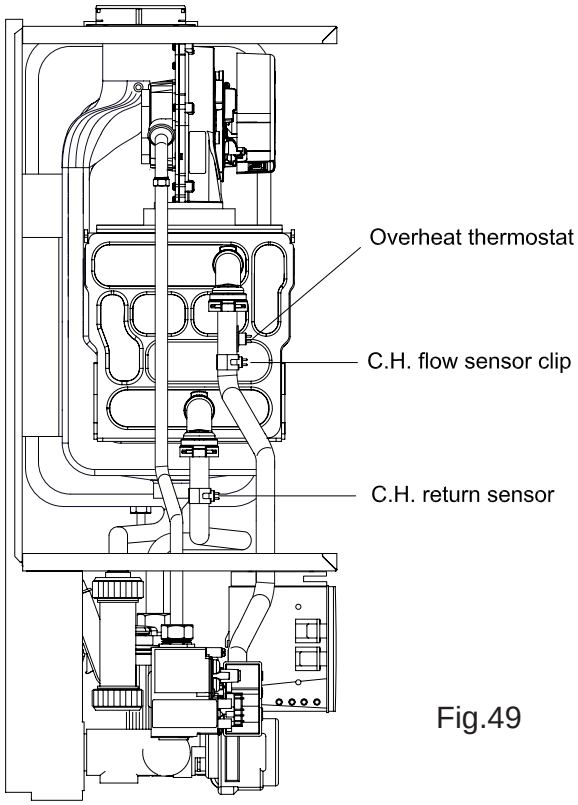

Fig.49

8.22 TO CLEAN AND REMOVE/REPLACE CONDENSING TRAP (Fig. 50)

Remove the front panel (fig. 39), bottom and left side panels (fig. 40).
Remove the securing clip and pull out the plastic pipe that connects the condensing trap at the heat exchanger.
Unscrew the nut that fastens the condensing trap to the depression chamber and remove it.
If the side panel can not be removed then remove the gas valve (see sec 8.10) and continue with the above instructions.
Replace in reverse order.

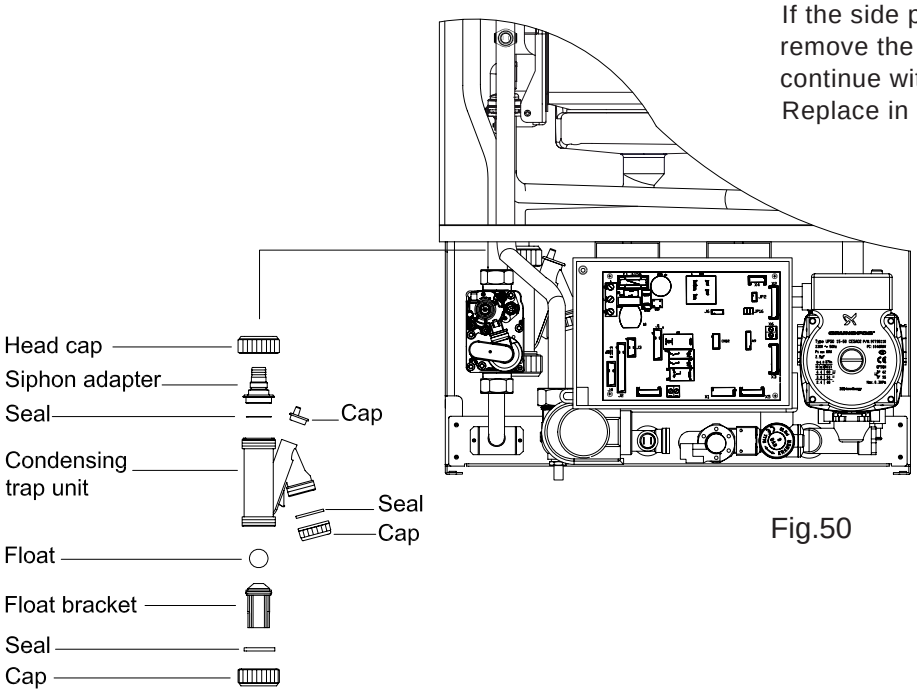

Fig.50

8.23 TO REMOVE PANEL CONTROL BOX (Fig. 51,52,53).

Remove the front panel (fig. 39).
Pull forward the control panel box with both hands until it is slightly out of the boiler. As doing so move the box over to the left while still pulling it forward until the control box becomes free.
Lift and fix the box on the depression chamber with the service retaining clips (fig. 53).
This will allow free access to lower part of the boiler.

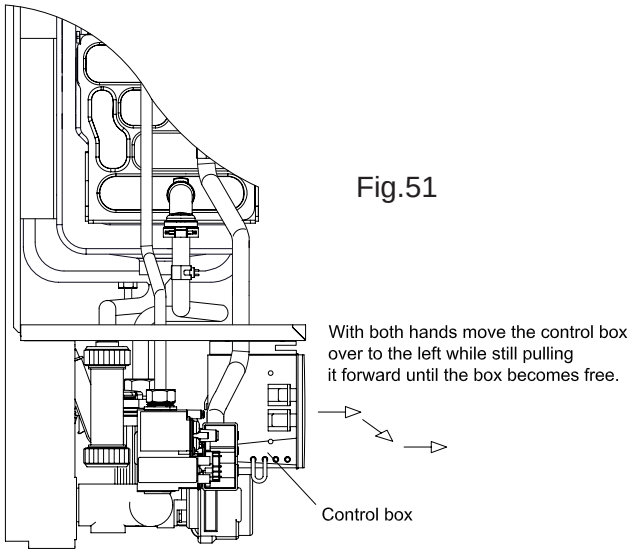

Fig.51

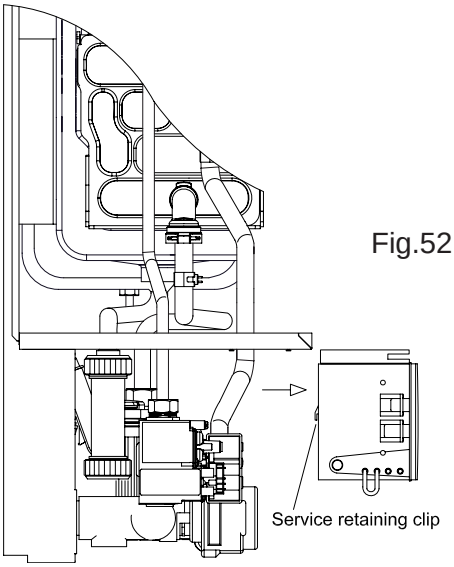

Fig.52

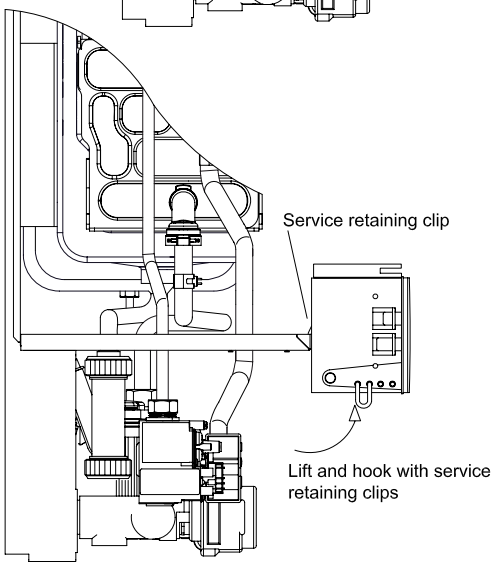

Fig.53

8.24 TO REMOVE THE INSTRUMENT PANEL (Fig. 54).

Remove the front panel (fig. 39).
Push the four retaining latches and remove the front of the panel box (fig. 54).

8.25 TO REMOVE/REPLACE CONTROL BOARD (Fig.55).

Remove the front panel (fig. 39).
Remove the instrument panel (sect. 8.24).
Detach all connectors from control board, unscrew the four screws and lift up.
Replace in reverse order (fig. 55).

8.26 TO REMOVE/REPLACE DIGITAL DISPLAY BOARD.

Remove the front panel (fig. 39).
Remove the instrument panel (8.24).
Detach the connectors and unscrew the four screws.
Replace in reverse order.

8.27 EXTERNAL CONTROL CONNECTION (Fig. 54)

Remove the front panel (fig. 39).
Remove the external wire link on the panel control box.
Replace with external wire controls.
(These must be volt free).

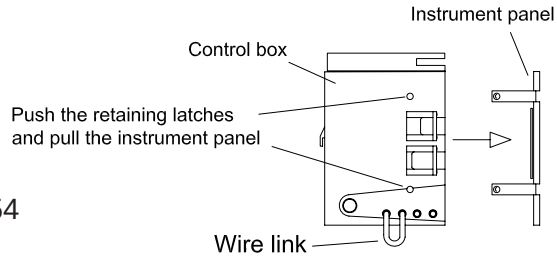

Fig.54

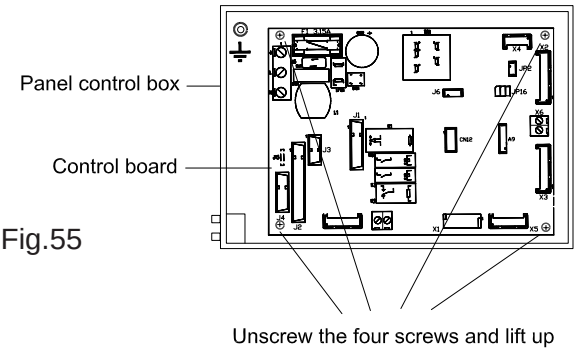

Fig.55

9 FAULT FINDING CENTRAL HEATING

Before trying to operate the boiler make sure that: all gas supply cocks are open and the gas supply has been purged of air. The heating system pressure is at least 1 bar min to 1.5 bar max, select winter position on the digital display and set the central heating temperature to maximum. (sect. 1.5).
Ensure external controls are calling for heat (room thermostat/ digital clock) and check the following appliance operations:

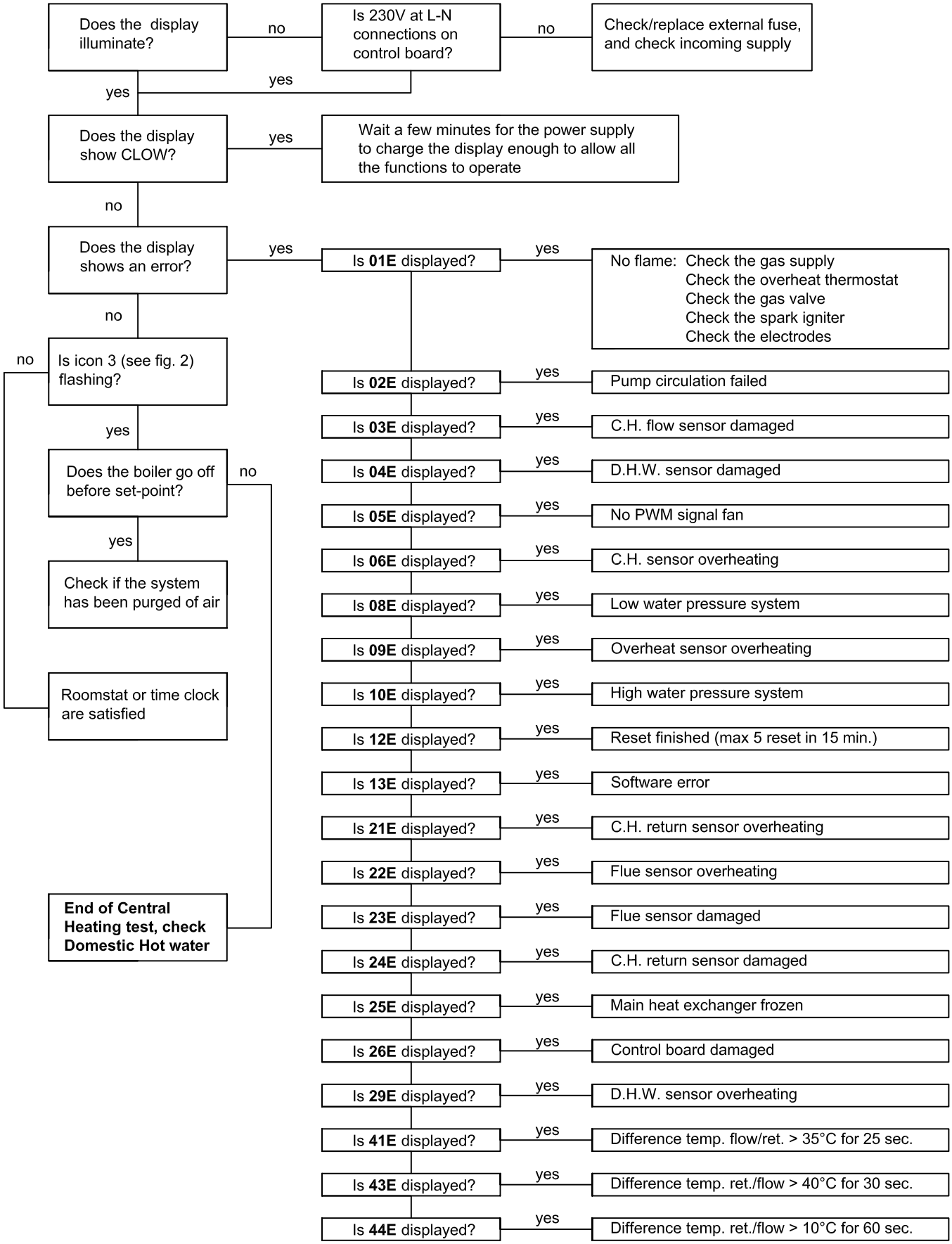

9.1 FAULT FINDING DOMESTIC HOT WATER

Before continuing see section 9, and after selecting the summer position on the digital display and setting the domestic hot water temperature to maximum (sect.1.5).
Open the domestic hot tap and check the following appliance operations:

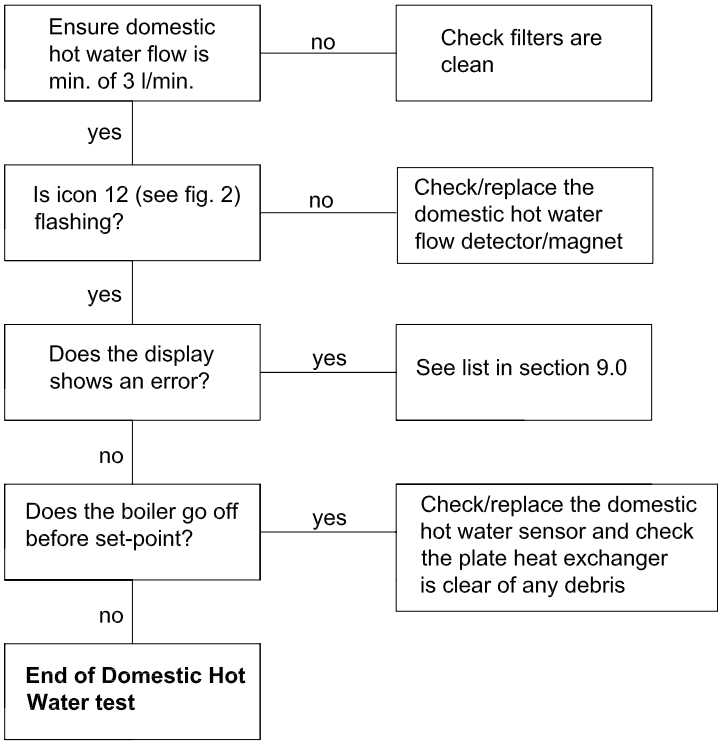

10 ELECTRICAL SYSTEM DIAGRAM

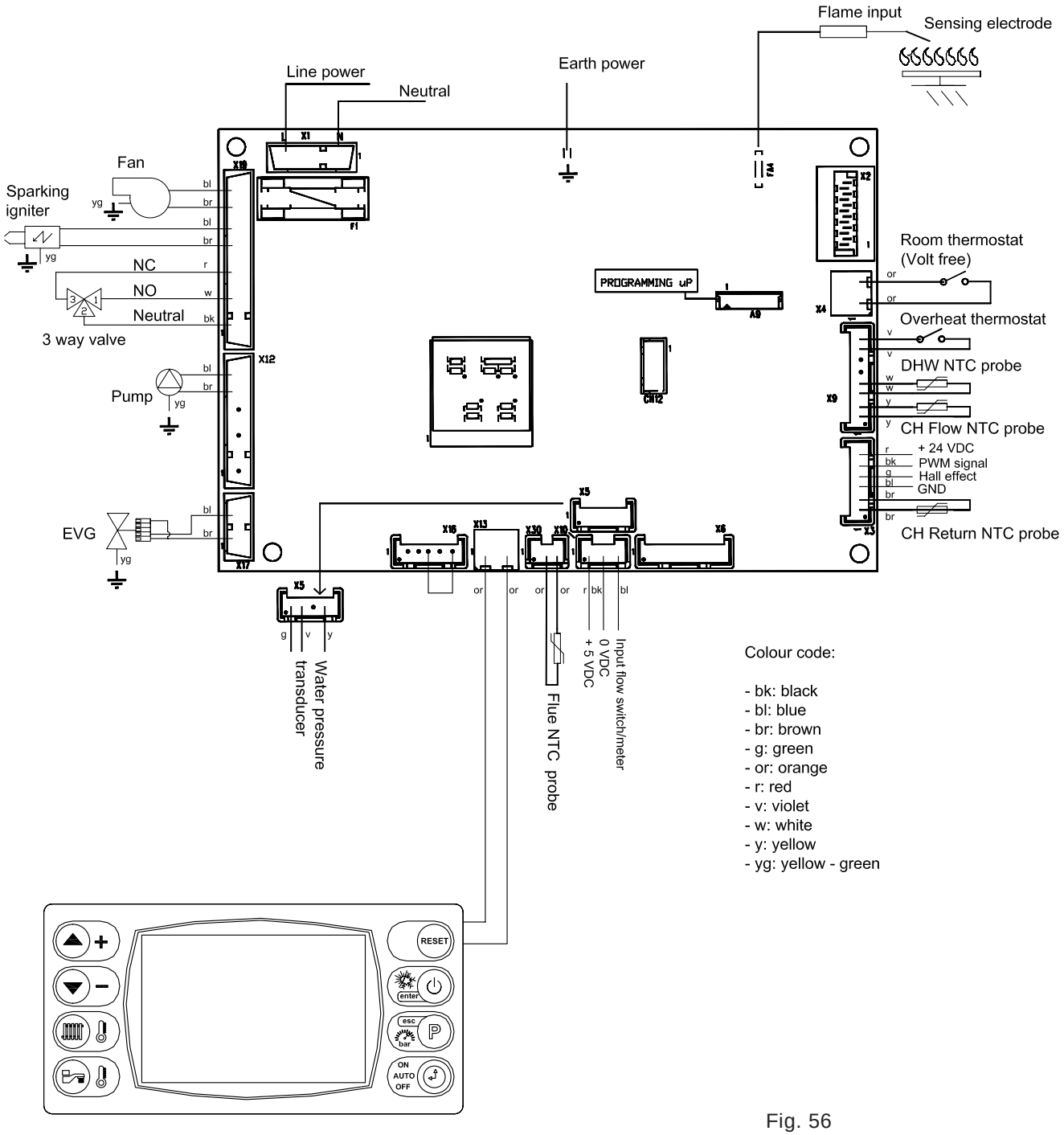

Colour code:

- bk: black
- bl: blue
- br: brown
- g: green
- or: orange
- r: red
- v: violet
- w: white
- y: yellow
- yg: yellow - green

Fig. 56

11 SPARE PARTS

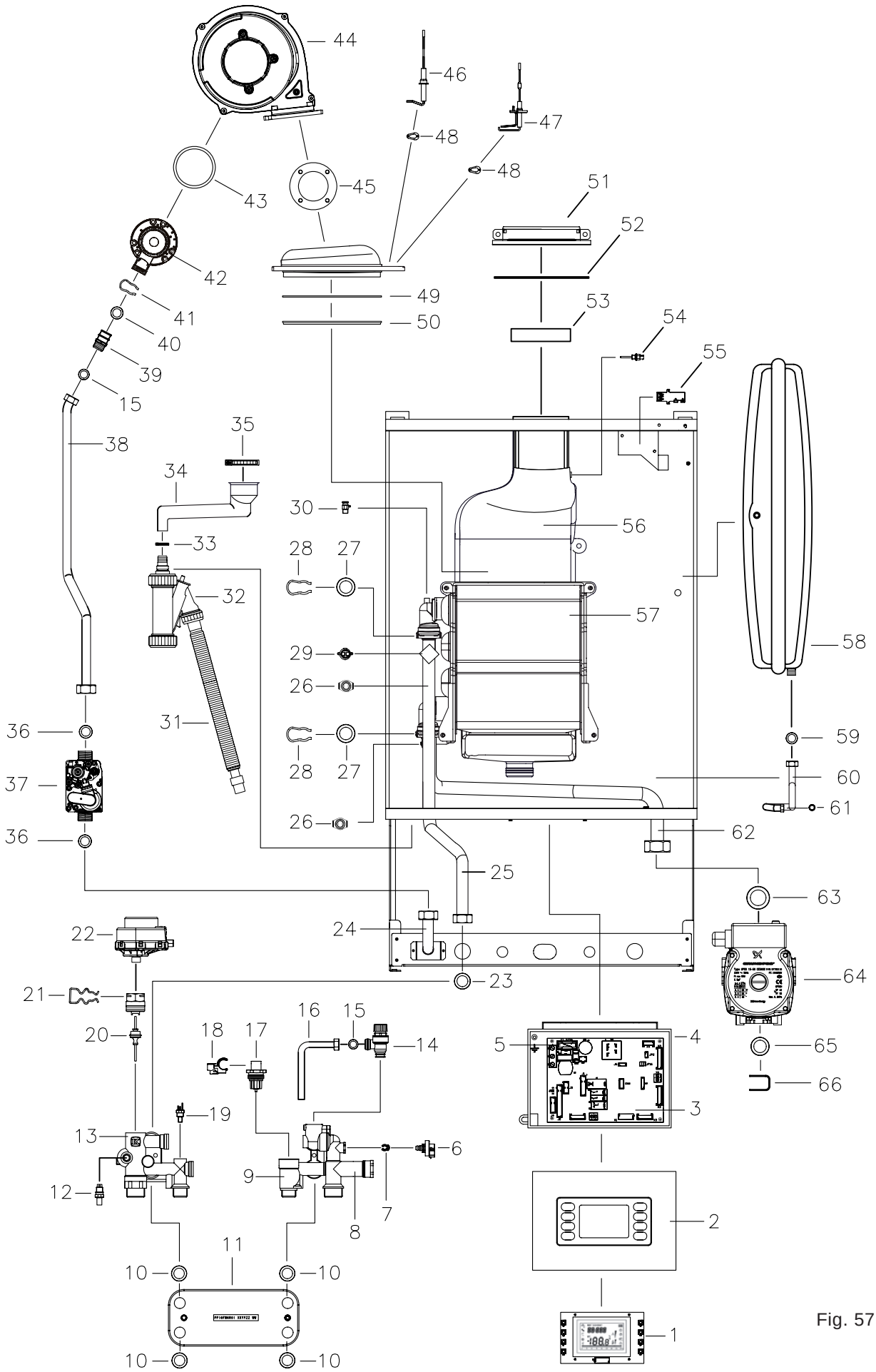

Fig. 57

RAVENHEAT CS 80/90 (T)
HIGH EFFICIENCY CONDENSING COMBINATION BOILER

SHORT LIST OF SPARE PARTS AND FLUE ACCESSORIES

Pos.	Part. No.	G.C. Part. No.	Description
1	CIR150100		Digital display
2	PAN150100		Instrument panel CS 80/90 with timer
2.1	PAN150150		Instrument panel CS 80/90 without timer
3	CIR150070		Control board
4	SCA110051		Instrument panel box
5	FUS010150		Internal fuse 3.15 A
6	TRA150100		Water pressure transducer
7	FOR150250		Water pressure transducer clip
8	GRU150120		Return manifold
9	GRU150100		Turbine manifold
10	ORI110450		Plate heat exchanger O-ring
11	SCA150150		CS 80 plate heat exchanger
11.1	SCA150200		CS 90 plate heat exchanger
12	VAL150250		Drain valve
13	GRU150050		Flow manifold
14	VAL150100		Safety relief valve
15	5018025		1/2” gasket (GUA010200)
16	TUB150480		Safety relief valve pipe
17	TUR150050		Turbine
18	RIV150050		Flow detector switch
19	SON150050		D.H.W. sensor
20	OTT150050		Diverter valve by-pass
21	FOR150150		Diverter valve motor clip
22	MOT150050		Diverter valve motor
23	5018030		3/4”gasket (GUA010250)
24	TUB150150		Gas valve inlet pipe
25	TUB150070		Flow pipe
26	SON110100		C.H. flow and return sensors (SON110150)
27	ORI150100		Primary heat exchanger O-ring
28	FOR150050		Primary heat exchanger clip
29	TER080050		Overheat thermostat (TER060150)
30	VAL150200		Manual air vent
31	TUB110150		Flexible condensing pipe (TUB110300)
32	RAC110050		Condensing trap
33	FAS150050		Condensing trap pipe hose clamp 12-22
34	TUB150050		Condensing pipe
35	FAS150150		Condensing trap hose clamp 30-45
36	GUA010260		3/4” gas valve gasket
37	VAL150150		Gas valve
38	TUB150200		Gas valve outlet pipe CS 80
38.1	TUB150250		Gas valve outlet pipe CS 90

Pos.	Part. No.	G.C. Part. No.	Description
39	RAC150050		Air/gas mixer junction
40	ORI150050		Air/gas mixer junction O-ring
41	FOR150100		Air/gas mixer junction clip
42	MIX150050		CS 90 air/gas mixer
42.1	MIX150100		CS 80 air/gas mixer
43	ORI110050		Air/gas mixer - fan O-ring
44	VEN130100		Fan
45	GUA110052		Fan - burner gasket
46	CAN150100		Sensing electrode
47	CAN150070		Spark electrode
48	GUA150050		Sensing/spark electrode gasket
49	GUA150100		CS 90 burner gasket
49.1	GUA150120		CS 80 burner gasket
50	BRU150050		CS 80 burner
50.1	BRU150100		CS 90 burner
51	FLA110050		Flue flange (FLA110052)
52	GUA110350		Flue flange gasket
53	GUA110250		Flue manifold washer (GUA130050)
54	SON130050		Temperature flue sensor
55	GEN150100		Spark igniter
56	COL150050		Flue exhaust manifold
57	SCA150050		CS 80 main heat exchanger
57.1	SCA150100		CS 90 main heat exchanger
58	VAS150050		Expansion vessel
59	GUA050050		3/8” gasket (GUA060111)
60	TUB150120		Expansion vessel pipe
61	GUA010050		1/4” gasket
62	TUB150110		Return pipe
63	GUA010310		1” gasket (GUA010311)
64	CIR150100		Pump
65	ORI150150		Pump O-ring
66	FOR150200		Pump clip
/	IMP150050		CS 80-90 (T) wiring harness

Plume Management Kit (see sect. 5.6)

Part. No.	Description
TER110101	1 metre high plume kit
CUR110050	45° flue exhaust deflection bend
CUR11010	90° flue exhaust deflection bend

Accessories concentric flue 60/100 (see sect. 5.12 - Table 7)

Part. No.	Description
PR5094110A	Straight flue header / sample point 60/100
PRFE	Flue Extension 60/100 L1000
PR45FBI	45° bend 60/100
PR90FBI	90° elbow bend 60/100
PR5023016	Horizontal terminal 60/100
TER110200	Vertical flue Terminal

Accessories concentric flue 80/125 (see sect. 5.18)

Part. No.	Description
PR5094110A	Straight flue header / sample point 60/10
PRO110300	Flue Extension 80/125 L1000
RID110050	125/80 to 100/60 Flue reducer
CUR110250	45° bend 80/125
CUR110300	90° elbow bend 80/125
TER010050	Horizontal Flue Terminal 80/125
TER110200	Vertical Flue Terminal 80/125
TEG060050	Flashing sleeve/slate

Accessories eccentric flue 80/80 (see sect. 5.13 - 5.14 - 5.15 - 5.16 - 5.17)

Part. No.	Description
SDO110100	Twin flue header F80/80
PRO110200	Straight pipe L1000 80
CUR110150	90° elbow bend 80
CUR110250	45° bend 80
GRI110050	Air inlet terminal 80
GRI110100	Exhaust terminal 80
TER060110	Vertical eccentric flue terminal

RAVENHEAT®

Chartists Way, Morley, Leeds, U.K. LS27 9ET

Telephone: 0113 252 7007
Fax: 0113 238 0229
Website: www.ravenheat.co.uk
E-mail: sales@ravenheat.co.uk

Ravenheat reserves the right to make changes and improvements in our products which may affect the accuracy of the information contained in this leaflet.

COD 0017LIB15007/0 01/2015

12 BENCHMARK COMMISSIONING CHECKLIST DETAILS

Boiler	Page
Make and model	14/17
Appliance serial no. on data badge	Left side panel
Controls	
Temperature control to heating	12
Temperature control to hot water	12
Heating zone valves	n/a
Auto by-pass	22
Boiler interlock	22
For all boilers	
Flushing to BS7593	24
Inhibitor	25
Central heating mode	
Heat input	to be calculated

	Page
Burner operating pressure	n/a
Central heating flow temp	measure and record
Central heating return temp	measure and record
For combination boilers only	
Scale reducer	25
Hot water mode	
Max. operating burner pressure	measure and record
Max. operating water pressure	measure and record
Cold water inlet temp	measure and record
Hot water temp	measure and record
Water flow rate at max. setting	measure and record
For condensing boiler only	
Condensate drain	38/39

For all boilers: complete, sign & hand over to the customer.

NOTE TO THE INSTALLER: COMPLETE THE BENCHMARK COMMISSIONING CHECKLIST AND LEAVE THESE INSTRUCTIONS WITH APPLIANCE

benchmark
COLLECTIVE MARK
THE MARK OF QUALITY FOR THE INSTALLATION, COMMISSIONING AND SERVICING OF DOMESTIC HEATING AND HOT WATER SYSTEMS

For assistance please call Ravenheat technical helpline:
telephone: 0113 252 7007
fax: 0113 238 0229
e-mail: sales@ravenheat.co.uk

Code Of Practice

For the installation, commissioning and servicing of domestic heating and hot water products

Benchmark places responsibilities on both manufacturers and installers.* The purpose is to ensure that customers** are provided with the correct equipment for their needs, that it is installed, commissioned and serviced in accordance with the manufacturer's instructions by competent persons and that it meets the requirements of the appropriate Building Regulations. Installers are required to carry out work in accordance with the following:

Standards of Work

- Be competent and qualified to undertake the work required.
- Install, commission, service and use products in accordance with the manufacturer's instructions provided.
- Ensure that where there is responsibility for design work, the installation is correctly sized and fit for purpose.
- Meet the requirements of the appropriate Building Regulations. Where this involves notifiable work be a member of a Competent Persons Scheme or confirm that the customer has notified Local Authority Building Control (LABC), prior to work commencing.
- Complete all relevant sections of the Benchmark Checklist/Service Record when carrying out commissioning or servicing of a product or system.
- Ensure that the product or system is left in a safe condition and, whenever possible, in good working order.
- Highlight to the customer any remedial or improvement work identified during the course of commissioning or servicing work.
- Refer to the manufacturer's helpline where assistance is needed.
- Report product faults and concerns to the manufacturer in a timely manner.

Customer Service

- Show the customer any identity card that is relevant to the work being carried out prior to commencement or on request.
- Give a full and clear explanation/demonstration of the product or system and its operation to the customer.
- Hand over the manufacturer's instructions, including the Benchmark Checklist, to the customer on completion of an installation.
- Obtain the customer's signature, on the Benchmark Checklist, to confirm satisfactory demonstration and receipt of manufacturer's instructions.
- Advise the customer that regular product servicing is needed, in line with manufacturers' recommendations, to ensure that safety and efficiency is maintained.
- Respond promptly to calls from a customer following completion of work, providing advice and assistance by phone and, if necessary, visiting the customer.
- Rectify any installation problems at no cost to the customer during the installer's guarantee period.

benchmark
COLLECTIVE MARK
THE MARK OF QUALITY FOR THE INSTALLATION, COMMISSIONING AND SERVICING OF DOMESTIC HEATING AND HOT WATER SYSTEMS

*The use of the word "installer" is not limited to installation itself and covers those carrying out installation, commissioning and/or servicing of heating and hot water products, or the use of supporting products (such as water treatment or test equipment).
**Customer includes householders, landlords and tenants.

© Heating and Hotwater Industry Council (HHIC)

www.centralheating.co.uk

INSTALLER NOTIFICATION GUIDELINES

A change to Building Regulations (England and Wales) requires the installer to notify when installing a heating appliance, as from 1st April 2005.

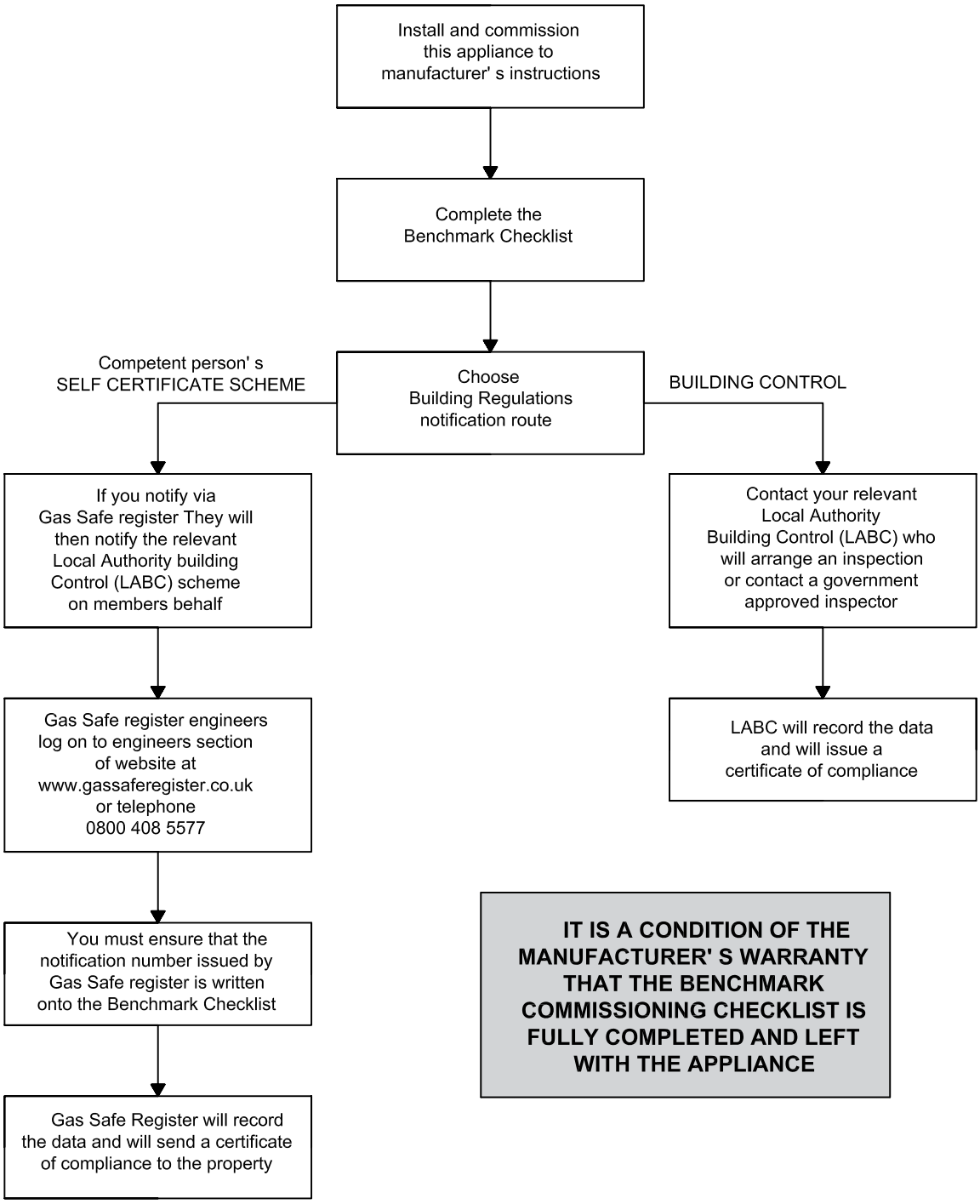

IT IS A CONDITION OF THE MANUFACTURER' S WARRANTY THAT THE BENCHMARK COMMISSIONING CHECKLIST IS FULLY COMPLETED AND LEFT WITH THE APPLIANCE

Benchmark Commissioning and Servicing Section

It is a requirement that the boiler is installed and commissioned to the manufacturers instructions and the data fields on the commissioning checklist completed in full.

To instigate the boiler guarantee the boiler needs to be registered with the manufacturer within one month of the installation.

To maintain the boiler guarantee it is essential that the boiler is serviced annually by a Gas Safe registered engineer who has been trained on the boiler installed. The service details should be recorded on the Benchmark Service Interval Record and left with the householder.

benchmark
COLLECTIVE MARK
THE MARK OF QUALITY FOR THE INSTALLATION, COMMISSIONING AND SERVICING OF DOMESTIC HEATING AND HOT WATER SYSTEMS

www.centralheating.co.uk

© Heating and Hotwater Industry Council (HHIC)

FLOWCHART FOR CO LEVEL AND COMBUSTION RATIO CHECK ON COMMISSIONING A CONDENSING BOILER

Important Preliminary Information on Checks

The air gas ratio valve is factory-set and must not be adjusted DURING COMMISSIONING.

If the boiler requires conversion to operate with a different gas family (e.g. conversion from natural gas to LPG) separate guidance is provided with the conversion kit supplied and this must be followed.

PRIOR TO CO LEVEL AND COMBUSTION RATIO CHECK

The installation instructions must have been followed, gas type verified and gas supply pressure / gas rate checked as required prior to commissioning.

As part of the installation process, ESPECIALLY WHERE A FLUE HAS BEEN FITTED BY PERSONS OTHER THAN THE BOILER INSTALLER, visually check the integrity of the whole flue system to confirm that all components are correctly assembled, fixed and supported. Check that maximum flue lengths have not been exceeded and all guidance has been followed (e.g. Gas Safe Register Technical Bulletin (TB) 008 where chimney/flues are in voids).

The ECGA should be of the correct type, as specified by BS 7967.

Prior to its use, the ECGA should have been maintained and calibrated as specified by the manufacturer. The installer must have the relevant competence for use of the analyser.

Check and zero the analyser IN FRESH AIR in accordance with the analyser manufacturer's instructions.

KEY:
CO = carbon monoxide
CO_2 = carbon dioxide
O_2 = oxygen
Combustion Ratio = The CO reading measured in ppm divided by the CO_2 reading first converted to ppm
ppm = parts per million

Setting to Minimum Rate:

1 - Put the boiler in Test mode function (see section 6.16)
2 - Create a CH demand by ensuring that the system controls are requesting heat and the boiler is set in the Winter Position.
3 - Press the arrow down button to set the minimum fan speed.
5 - The function is enabled for maximum 15 minutes, press reset to esc test mode.

12.1 ANALYSER CHECK LIST

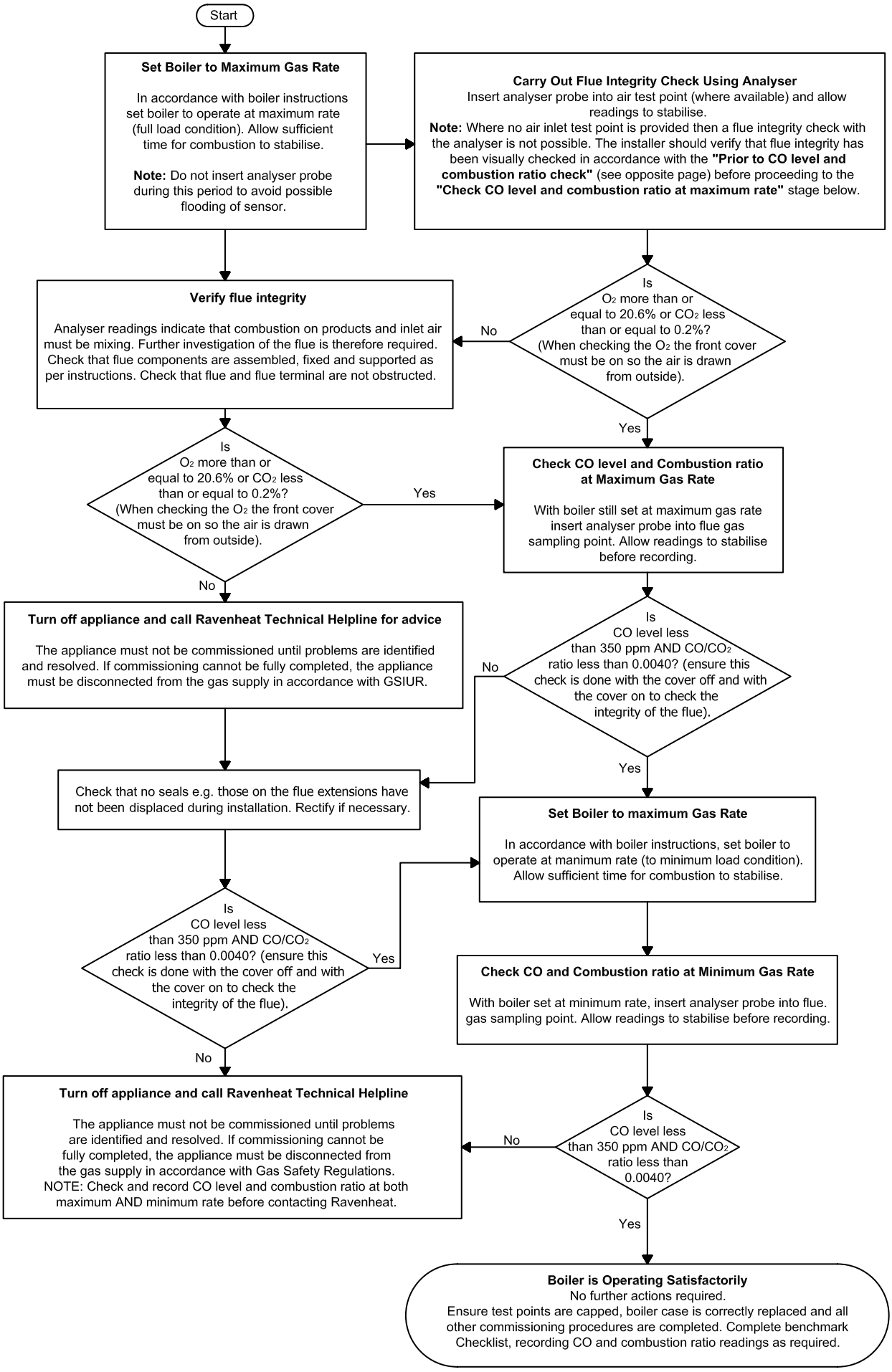

GAS BOILER SYSTEM COMMISSIONING CHECKLIST

This Commissioning Checklist is to be completed in full by the competent person who commissioned the boiler as a means of demonstrating compliance with the appropriate Building Regulations and then handed to the customer to keep for future reference.

Failure to install and commission according to the manufacturer's instructions and complete this Benchmark Commissioning Checklist will invalidate the warranty. This does not affect the customer's statutory rights.

Customer name:	Telephone number:
Address:	
Boiler make and model:	
Boiler serial number:	
Commissioned by (PRINT NAME):	Gas Safe register number:
Company name:	Telephone number:
Company address:	
	Commissioning date:
To be completed by the customer on receipt of a Building Regulations Compliance Certificate*	
Building Regulations Notification Number (if applicable):	

CONTROLS (tick the appropriate boxes)				
Time and temperature control to heating	Room thermostat and programmer/timer		Programmable room thermostat	
	Load/weather compensation		Optimum start control	
Time and temperature control to hot water	Cylinder thermostat and programmer/timer		Combination Boiler	
Heating zone valves	Fitted		Not required	
Hot water zone valves	Fitted		Not required	
Thermostatic radiator valves	Fitted		Not required	
Automatic bypass to system	Fitted		Not required	
Boiler interlock			Provided	

ALL SYSTEMS				
The system has been flushed and cleaned in accordance with BS7593 and boiler manufacturer's instructions			Yes	
What system cleaner was used?				
What inhibitor was used?		Quantity		litres
Has a primary water system filter been installed?	Yes		No	

CENTRAL HEATING MODE measure and record:			
Gas rate	m³/hr	**OR**	ft³/hr
Burner operating pressure (if applicable)	mbar	**OR** Gas inlet pressure	mbar
Central heating flow temperature			°C
Central heating return temperature			°C

COMBINATION BOILERS ONLY				
Is the installation in a hard water area (above 200ppm)?	Yes		No	
If yes, and if required by the manufacturer, has a water scale reducer been fitted?	Yes		No	
What type of scale reducer has been fitted?				
DOMESTIC HOT WATER MODE Measure and Record:				
Gas rate	m³/hr	**OR**	ft³/hr	
Burner operating pressure (at maximum rate)	mbar	**OR** Gas inlet pressure at maximum rate	mbar	
Cold water inlet temperature			°C	
Hot water has been checked at all outlets	Yes		Temperature	°C
Water flow rate			l/min	

CONDENSING BOILERS ONLY		
The condensate drain has been installed in accordance with the manufacturer's instructions and/or BS5546/BS6798	Yes	

ALL INSTALLATIONS						
Record the following:	At max. rate:	CO	ppm	**AND**	CO/CO_2	Ratio
	At min. rate: (where possible)	CO	ppm	**AND**	CO/CO_2	Ratio
The heating and hot water system complies with the appropriate Building Regulations					Yes	
The boiler and associated products have been installed and commissioned in accordance with the manufacturer's instructions					Yes	
The operation of the boiler and system controls have been demonstrated to and understood by the customer					Yes	
The manufacturer's literature, including Benchmark Checklist and Service Record, has been explained and left with the customer					Yes	

Commissioning Engineer's Signature
Customer's Signature
(To confirm satisfactory demonstration and receipt of manufacturer's literature)

*All installations in England and Wales must be notified to Local Authority Building Control (LABC) either directly or through a Competent Persons Scheme. A Building Regulations Compliance Certificate will then be issued to the customer.

benchmark COLLECTIVE MARK
THE MARK OF QUALITY FOR THE INSTALLATION, COMMISSIONING AND SERVICING OF DOMESTIC HEATING AND HOT WATER SYSTEMS

© Heating and Hotwater Industry Council (HHIC)

SERVICE RECORD

It is recommended that your heating system is serviced regularly and that the appropriate Service Interval Record is completed.

Service Provider

Before completing the appropriate Service Record below, please ensure you have carried out the service as described in the manufacturer's instructions. Always use the manufacturer's specified spare part when replacing controls.

SERVICE 01				Date:
Engineer name:				
Company name:				
Telephone No:				
Gas safe register No:				
Record:	At max. rate:	CO ppm	**AND**	CO_2 %
	At min. rate: (Where Possible)	CO ppm	**AND**	CO_2 %
Comments:				
Signature				

SERVICE 02				Date:
Engineer name:				
Company name:				
Telephone No:				
Gas safe register No:				
Record:	At max. rate:	CO ppm	**AND**	CO_2 %
	At min. rate: (Where Possible)	CO ppm	**AND**	CO_2 %
Comments:				
Signature				

SERVICE 03				Date:
Engineer name:				
Company name:				
Telephone No:				
Gas safe register No:				
Record:	At max. rate:	CO ppm	**AND**	CO_2 %
	At min. rate: (Where Possible)	CO ppm	**AND**	CO_2 %
Comments:				
Signature				

SERVICE 04				Date:
Engineer name:				
Company name:				
Telephone No:				
Gas safe register No:				
Record:	At max. rate:	CO ppm	**AND**	CO_2 %
	At min. rate: (Where Possible)	CO ppm	**AND**	CO_2 %
Comments:				
Signature				

SERVICE 05				Date:
Engineer name:				
Company name:				
Telephone No:				
Gas safe register No:				
Record:	At max. rate:	CO ppm	**AND**	CO_2 %
	At min. rate: (Where Possible)	CO ppm	**AND**	CO_2 %
Comments:				
Signature				

SERVICE 06				Date:
Engineer name:				
Company name:				
Telephone No:				
Gas safe register No:				
Record:	At max. rate:	CO ppm	**AND**	CO_2 %
	At min. rate: (Where Possible)	CO ppm	**AND**	CO_2 %
Comments:				
Signature				

SERVICE 07				Date:
Engineer name:				
Company name:				
Telephone No:				
Gas safe register No:				
Record:	At max. rate:	CO ppm	**AND**	CO_2 %
	At min. rate: (Where Possible)	CO ppm	**AND**	CO_2 %
Comments:				
Signature				

SERVICE 08				Date:
Engineer name:				
Company name:				
Telephone No:				
Gas safe register No:				
Record:	At max. rate:	CO ppm	**AND**	CO_2 %
	At min. rate: (Where Possible)	CO ppm	**AND**	CO_2 %
Comments:				
Signature				

SERVICE 09				Date:
Engineer name:				
Company name:				
Telephone No:				
Gas safe register No:				
Record:	At max. rate:	CO ppm	**AND**	CO_2 %
	At min. rate: (Where Possible)	CO ppm	**AND**	CO_2 %
Comments:				
Signature				

SERVICE 10				Date:
Engineer name:				
Company name:				
Telephone No:				
Gas safe register No:				
Record:	At max. rate:	CO ppm	**AND**	CO_2 %
	At min. rate: (Where Possible)	CO ppm	**AND**	CO_2 %
Comments:				
Signature				

*All installations in England and Wales must be notified to Local Authority Building Control (LABC) either directly or through a Competent Persons Scheme. A Building Regulations Compliance Certificate will then be issued to the customer.

benchmark COLLECTIVE MARK
THE MARK OF QUALITY FOR THE INSTALLATION, COMMISSIONING AND SERVICING OF DOMESTIC HEATING AND HOT WATER SYSTEMS

© Heating and Hotwater Industry Council (HHIC)