Installation, use and maintenance instructions

Kerosene and gas oil burners

One stage operation

RDB

CODE	MODEL	TYPE
3748950	RDB3 CF	489T50
3748850	RDB4 CF	488T50

2902587 (2)

INDEX

1. BURNER DESCRIPTION 1
1.1 Burner equipment 1

2. TECHNICAL DATA 2
2.1 Technical data 2
2.2 Overall dimensions. 2
2.3 Working field 2

3. INSTALLATION 3
3.1 Boiler fixing 3
3.2 Mounting the burner. 3
3.3 Hydraulic systems 4
3.4 Electrical wiring 5

4. WORKING 6
4.1 Combustion adjustment. 6
4.2 Nozzles recommended 6
4.3 Electrodes setting 7
4.4 Combustion head setting 8
4.5 Air damper adjustment 8
4.6 Pump pressure 8
4.7 Burner start-up cycle. 8

5. FAULTS / SOLUTIONS 9

1. BURNER DESCRIPTION

- One stage kerosene and gas oil burner.
- In case of **BF** applications the intake air temperature must not be over 70°C.
- The burner meets protection level of IP 40, EN 60529.
- Burner with CE marking in conformity with EEC directives: EMC 89/336/EEC, Low Voltage 73/23/EEC, Machines 98/37/EEC and Efficiency 92/42/EEC.
- CE Reg. N: **0036 0275/99** (489 T50) - **0036 0274/99** (488 T50), as 92/42/EEC.

Fig. 1

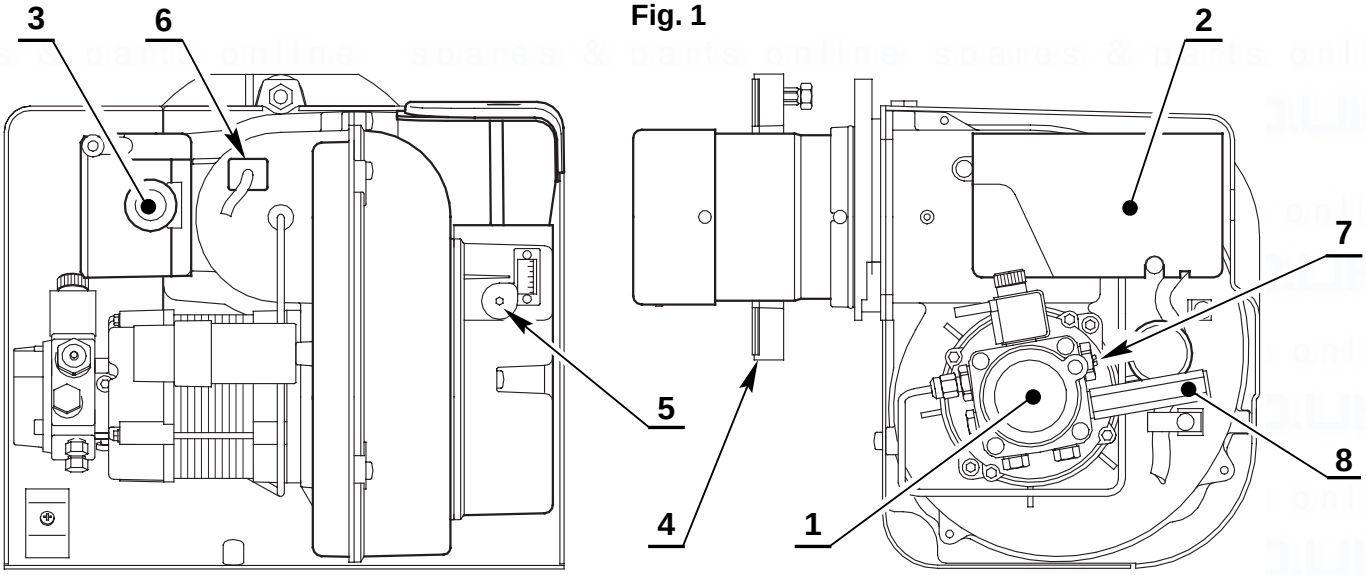

1 – Pump
2 – Control-box
3 – Reset button with lock-out lamp
4 – Flange with insulating gasket
5 – Air damper adjustment screw
6 – Photoresistance
7 – Pump pressure adjustment screw
8 – Pressure gauge port

1.1 BURNER EQUIPMENT

Flange and gasket . . . . . No. 1
Screw and nuts for flange . . . . . No. 1
Hexagonal key . . . . . No. 1
Flexible oil pipe with nipple . . . . . No. 1
Screw of by-pass pump . . . . . No. 1
Bolts for flange to be fixed to boiler . . . . . No. 4
Screws and terminal screw for feeding cable . . . . No. 3

2. TECHNICAL DATA

2.1 TECHNICAL DATA

TYPE	489 T50	488 T50
Output – Thermal power *(with air at 20 °C)*	3.0 – 5.8 kg/h	4.7 – 9.5 kg/h
	35.6 – 68.7 kW	55.7 – 113 kW
	(H_i = 11.97 kWh/kg)	
Fuel	Kerosene, viscosity 1.6 – 6 mm^2/s at 20 °C Gas oil, viscosity 4 – 6 mm^2/s at 20 °C ◆	
Electrical supply	Single phase, ~ 50Hz 230 V ± 10%	
Motor	Run current 1.3 A – 2750 rpm – 288 rad/s	
Capacitor	5 µF	
Ignition transformer	Secondary 8 kV – 16 mA	
Pump	Kerosene, maximum pressure 10 bar (145 psi) Gas oil, maximum pressure 15 bar (218 psi)	
Absorbed electrical power	0.16 kW	

◆ Gas oil is not permitted on low level discharge of flue gas products.

2.2 OVERALL DIMENSIONS

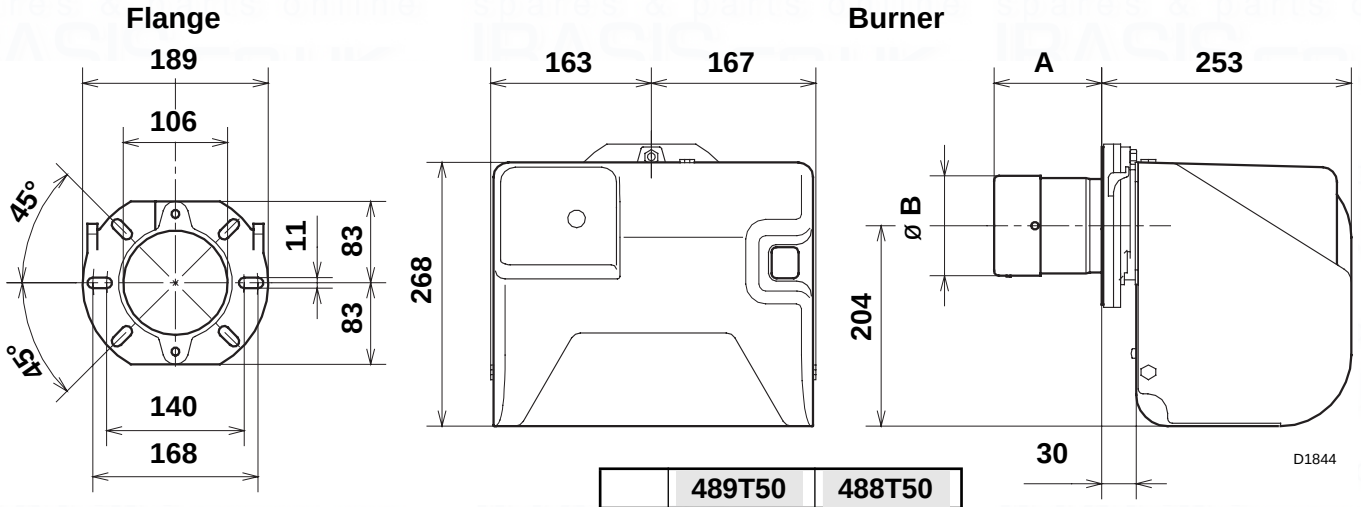

	489T50	488T50
A	78	111
ø B	88	105

2.3 WORKING FIELD (as EN 267)

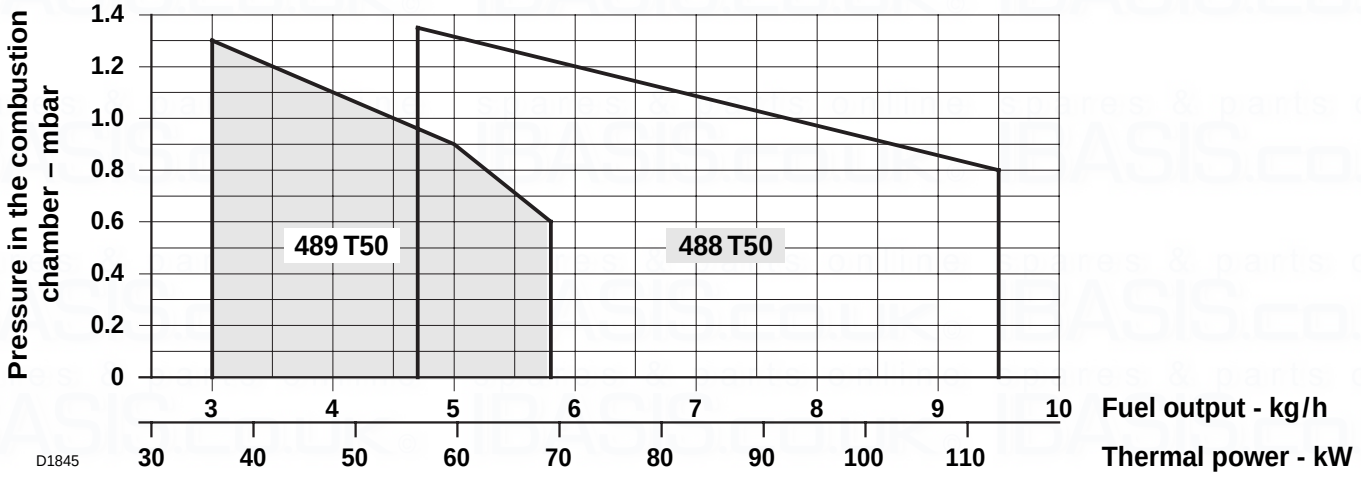

3. INSTALLATION

3.1 BOILER FIXING

➤ Put on the flange (1) the screw and two nuts, (see fig. 2).

➤ Widen, if necessary, the insulating gasket holes (5), (see fig. 3).

➤ Fix the flange (1) to the boiler door (4) using screws (2) and (*if necessary*) the nuts (3) **interposing the insulating gasket (5)**, (see fig. 4).

Fig. 2

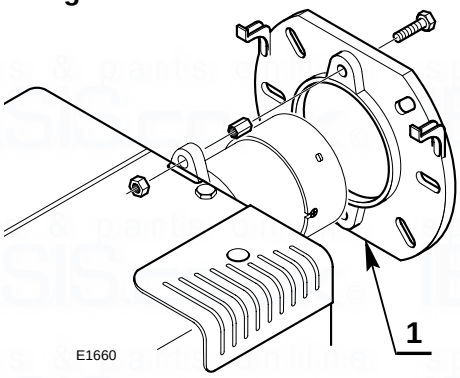

Fig. 3

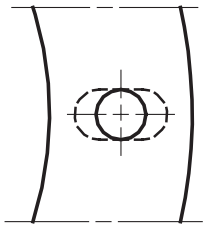

Fig. 4

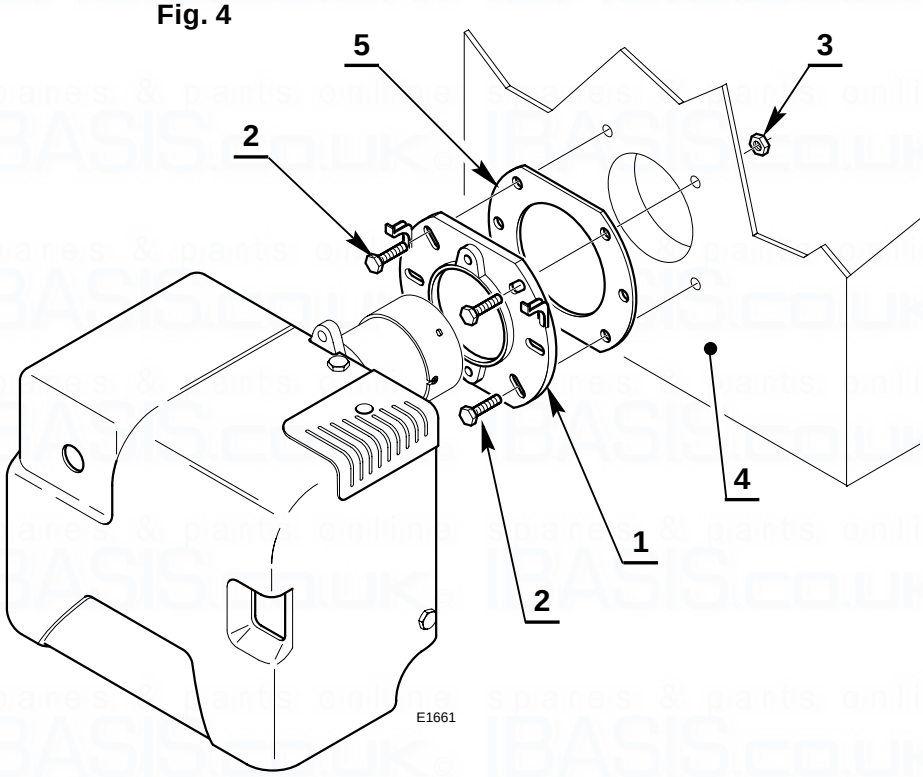

3.2 MOUNTING THE BURNER

1) In case of **CF** applications, the burner shall not operate without protection of the suction inlet.

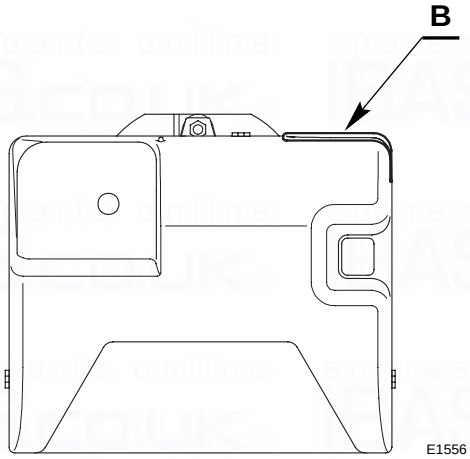

2) In case of **BF** applications an optional snorkel and gasket are available replacing **(B)** with **(C)**. This item can be supplied separetely.
The combustion air supply is through a flexible tube connected at the socket.

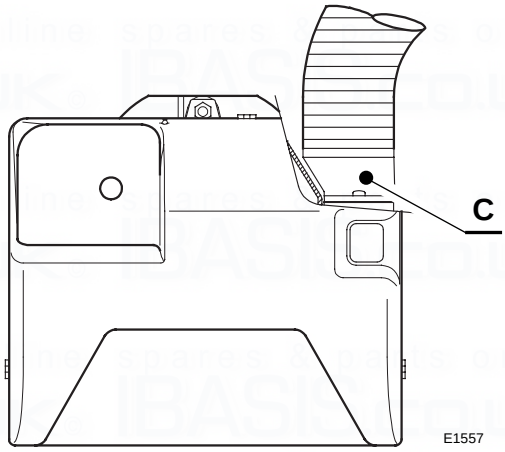

3.3 HYDRAULIC SYSTEMS

WARNING:

- **The pump is designed to allow working with one pipe. In order to obtain two pipes working it is necessary to unscrew the return plug (2), screw the by-pass screw (3) and then screw again the plug (2). (See fig. 5).**
- **In the two pipes systems, before starting the burner make sure that the return pipe-line is not clogged. An excessive back pressure would cause the damage of the pump seal.**

Fig. 5

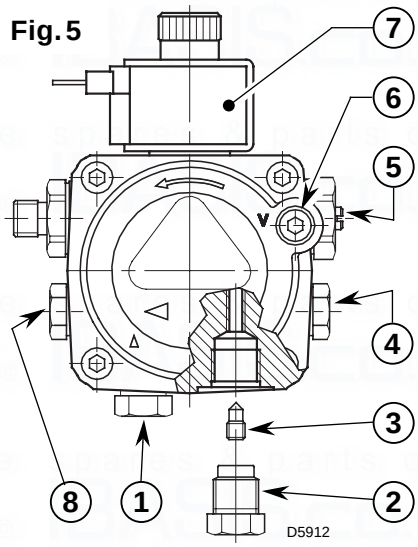

1 - Suction line
2 - Return line
3 - By-pass screw
4 - Gauge connection
5 - Pressure adjuster
6 - Suction gauge connection
7 - Valve
8 - Auxiliary pressure test point

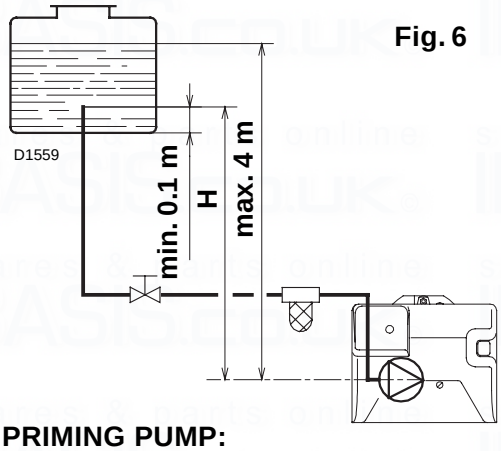

Fig. 6

H meters	L meters	
	I. D. 8 mm	I. D. 10 mm
0.5	10	20
1	20	40
1.5	40	80
2	60	100

PRIMING PUMP:

On the system in fig. 6 it is sufficient to loosen the suction gauge connection (6, fig. 5) and wait until oil flows out.
On the systems in fig. 7 and 8 start the burner and wait for the priming. Should lock-out occur prior to the arrival of the fuel, await at least 20 seconds before repeating the operation.
The pump suction should not exceed a maximum of 0,4 bar (30 cm Hg). Beyond this limit gas is released from the oil. Oil pipes must be completely tight.
In the vacuum systems (fig. 8) the return line should terminate within the oil tank at the same level as the suction line. In this case a non-return valve is not required. Should however the return line arrive over the fuel level, a non-return valve is required. This solution however is less safe than previous one, due to the possibility of leakage of the valve.

H meters	L meters	
	I. D. 8 mm	I. D. 10 mm
0	35	100
0.5	30	100
1	25	100
1.5	20	90
2	15	70
3	8	30
3.5	6	20

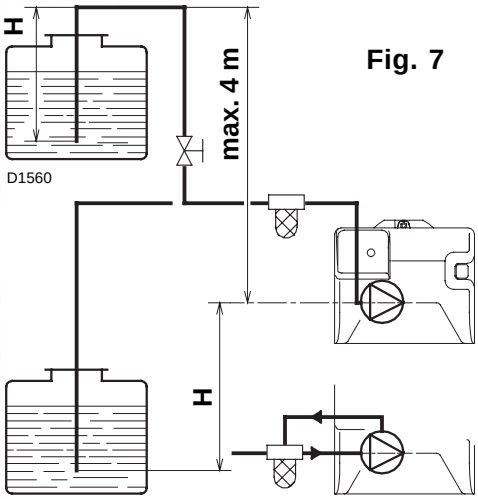

Fig. 7

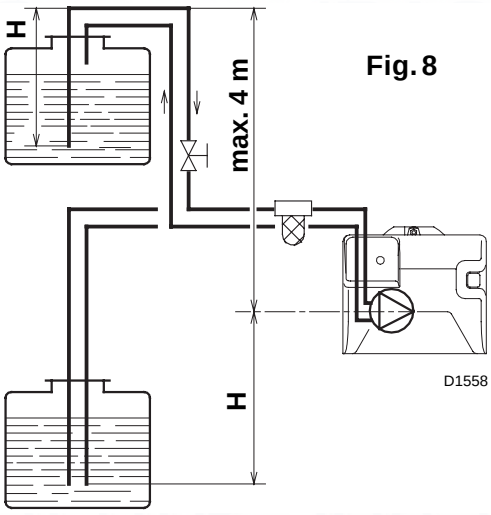

Fig. 8

- Check periodically the flexible pipes conditions.
  Using kerosene, they have to be replaced at least **every 2 years.**
- **A metal bowl filter with replaceable micronic filter must be fitted in the oil supply pipe.**

H = difference of level **L** = Max. lenght of the suction line **I.D.** = Interminal diameter of the oil pipes

3.4 ELECTRICAL WIRING

WARNING

DO NOT EXCHANGE NEUTRAL WITH PHASE

~ 50 Hz - 230 V

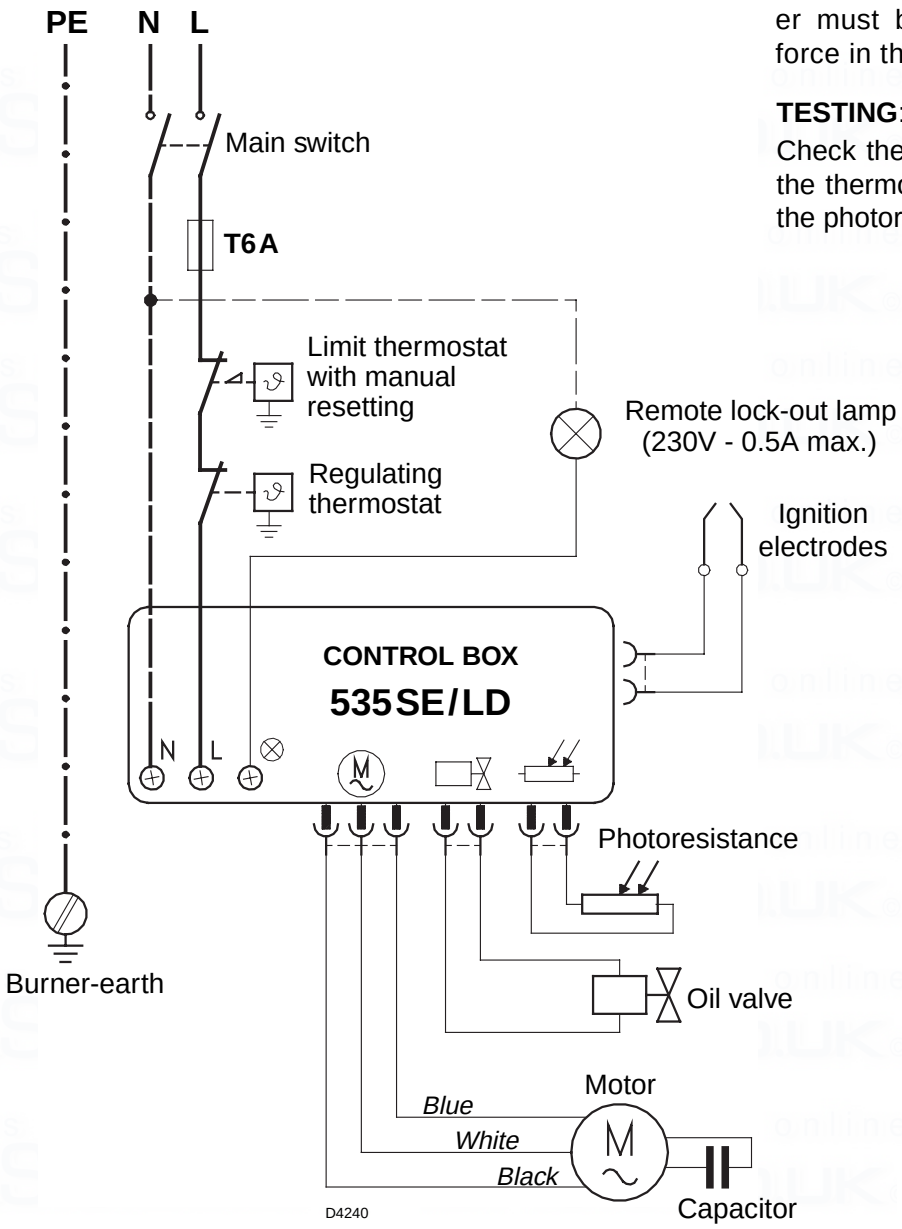

NOTES:

– Wires of min. 1 mm^2 section. (Unless requested otherwise by local standards and legislation).

– The electrical wiring carried out by the installer must be in compliance with the rules in force in the Country.

TESTING:

Check the shut-down of the burner by opening the thermostats and the lock-out by **darkening** the photoresistance.

CONTROL BOX (see fig. 9)

To remove the control box from the burner follow of the istruction:

➤ Loosen the screw (1), open the protection (2) and remove all components.

➤ Remove the coil (3).

➤ Loosen the two screws (4).

➤ Move a little the control box and remove the high voltage leads.

Fig. 9

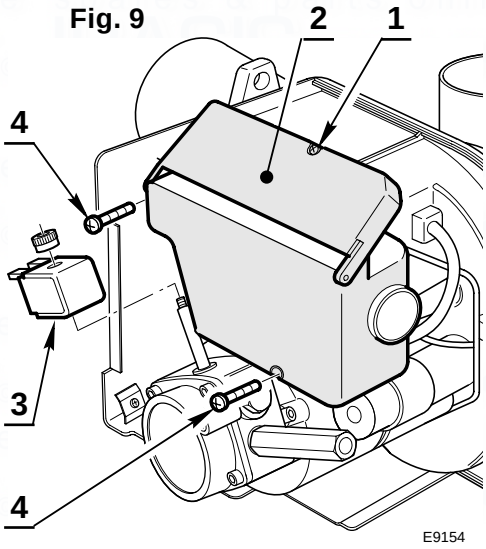

4. WORKING

4.1 COMBUSTION ADJUSTMENT

In conformity with Efficiency Directive 92/42/EEC the application of the burner on the boiler, adjustment and testing must be carried out observing the instruction manual of the boiler, including verification of the CO and CO_2 concentration in the flue gases, their temperatures and the average temperature of the water in the boiler.

To suit the required appliance output, choose the proper nozzle and adjust the pump pressure, the setting of the combustion head, and the air damper opening in accordance with the following schedule.

The values shown in the table are measured on a CEN boiler (as per EN 267). They refer to 12.5% CO_2 at sea level and with fuel and room temperature of 20°C.

		Nozzle		Pump pressure	Burner output	Combustion head adjustment	Air damper adjustment
		GPH	Angle	bar	kg/h ± 4%	Set-point	Set-point
489 T50	GAS OIL	0.75	60°	12	3.0	0.5	1.0
		0.85	60°	12	3.4	0.5	1.4
		1.00	60°	12	4.0	1.5	2.0
		1.10	60°	12	4.4	3.0	2.6
		1.25	60°	12	5.0	4.5	3.0
		1.35	60°	13	5.6	6.0	4.0
	KEROSENE	1.10	60°	7	3.08	0.0	1.1
		1.25	60°	8	3.74	0.0	1.4
		1.35	60°	8	4.04	0.5	1.9
		1.50	60°	8	4.49	1.5	2.2
		1.65	60°	8	4.93	3.0	2.5
		1.75	60°	8	5.23	4.5	3.1
		1.75	60°	10	5.85	6.0	4.0
488 T50	GAS OIL	1.10	60°	12	4.4	2.0	2.8
		1.25	60°	12	5.0	2.5	3.4
		1.35	60°	12	5.4	2.5	3.7
		1.50	60°	12	6.0	3.0	4.3
		1.65	60°	12	6.6	3.0	5.0
		1.75	60°	12	7.0	3.5	5.5
		2.00	60°	12	8.0	4.0	7.5
		2.25	60°	12	9.0	5.0	8.3
	KEROSENE	1.65	60°	7	4.65	2.0	2.8
		1.75	60°	8	5.23	2.5	3.1
		2.00	60°	8	5.98	2.5	3.9
		2.25	60°	8	6.73	3.0	5.1
		2.50	60°	8	7.48	3.5	5.9
		2.75	60°	8	8.22	4.0	7.4
		3.00	60°	9	9.51	5.0	8.5

4.2 NOZZLES RECOMMENDED:

Hago type ES - B ; Delavan type W - B;
Steinen type S ; Danfoss type S.

MAINTENANCE POSITION

ACCESS TO THE COMBUSTION HEAD, ELECTRODES AND NOZZLE (see fig. 10).

- ➤ Remove the burner out of the boiler, after loosing the fixing nut to the flange.
- ➤ Hook the burner to the flange (1), by removing the blast tube (2) after loosing the fixing screws (3).
- ➤ Remove the electrodes assembly (5) from the nozzle holder (4) after loosing its fixing screw (**A**, fig. 11).
- ➤ Screw the nozzle (6).

Fig. 10

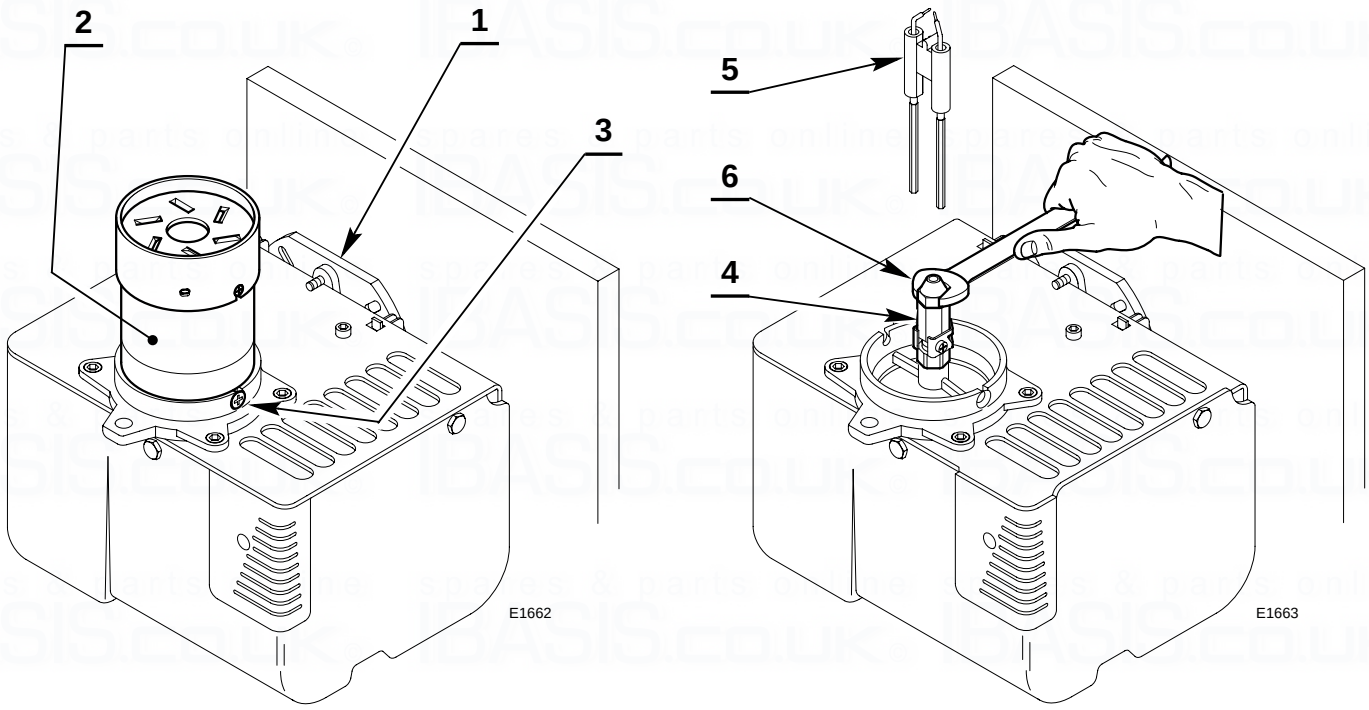

4.3 ELECTRODES SETTING

ATTENTION

Before removing or assembling the nozzle, loosen the screw (**A**, fig. 11) and move the electrodes ahead.

TYPE	D
489 T50	2 – 2.5 mm
488 T50	4 ± 0.5 mm

Fig. 11

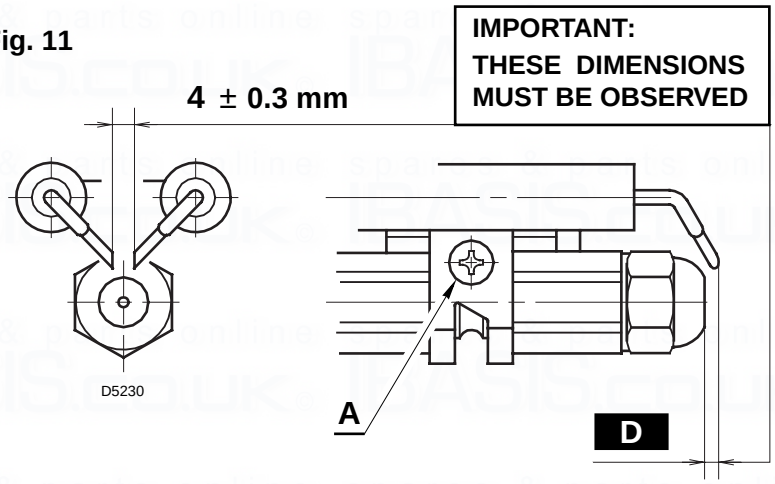

4.4 COMBUSTION HEAD SETTING

This is done when fitting the nozzle, with the blast tube removed. It depends on the output of the burner and is carried out by rotating the regulating rod, till the terminal plane of the blast tube is level with the set-point, as indicated in the schedule.

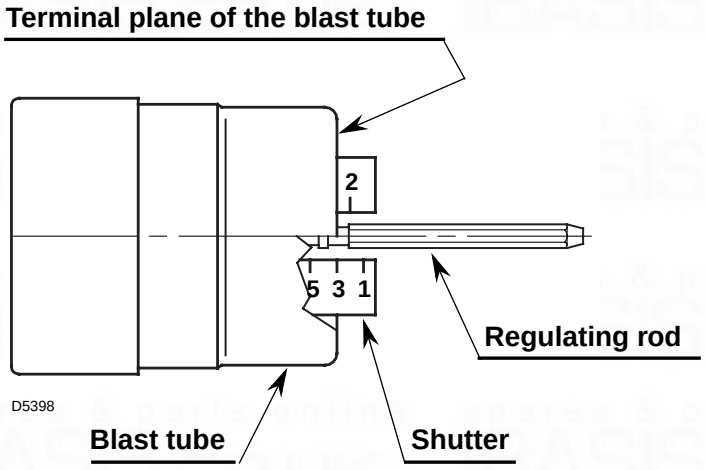

489 T50	488 T50
In the sketch on the left, the combustion head is set for an output of 1.10 GPH at 12 bar (*for gas oil*) or 1.65 GPH at 8 bar (*for kerosene*).	In the sketch on the left, the combustion head is set for an output of 1.50 GPH at 12 bar (*for gas oil*) or 2.25 GPH at 8 bar (*for kerosene*).

The shutter is level with set-point **3**, as required by the schedule at page 6.

Combustion head settings indicated in the schedule are valid for most cases.
The setting of the fan output according to the installation should normally be done only through the air damper.

4.5 AIR DAMPER ADJUSTMENT

The settings indicated in the schedule refer to the combustion-chamber with “zero” depression.
These regulations are purely indicative. Each installation however, has its own unpredictable working conditions: actual nozzle output; positive or negative pressure in the combustion-chamber, the need of excess air, etc.
All these conditions may require a different air-damper setting.

4.6 PUMP PRESSURE:

The pump leaves the factory set for kerosene working.

10 bar: maximum pressure for kerosene.

FOR GAS OIL INCREASE PRESSURE

12 bar: pressure suitable for gas oil in most cases.

14 bar: improves flame retention; it is therefore suitable for ignitions at low temperatures.

4.7 BURNER START-UP CYCLE

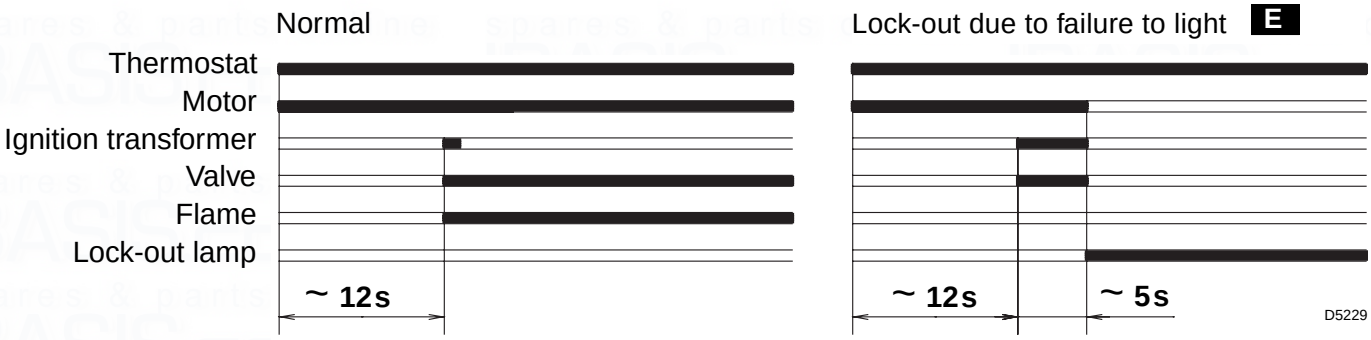

E Lock out is indicated by a lamp on the control box (3, fig. 1, page 1).

5. FAULTS / SOLUTIONS

Here below you can find some causes and the possible solutions for some problems that could cause a failure to start or a bad working of the burner.
A fault usually makes the lock-out lamp light which is situated inside the reset button of the control box (3, fig. 1, page 1).
When lock out lamp lights the burner will attempt to light only after pushing the reset button.
After this if the burner functions correctly, the lock-out can be attributed to a temporary fault.
If however the lock out continues the cause must be determined and the solution found.

FAULTS	POSSIBLE CAUSES	SOLUTION
The burner will not start when the adjustment thermostat closes.	Lack of electrical supply.	Check presence of voltage in the L - N clamps of the control box.
		Check the conditions of the fuses.
		Check that thermostat limit is not lock out.
	The photoresistance sees false light.	Eliminate the light.
	The connections in the control box are wrongly inserted.	Check and connect completely all the plugs.
Burner runs normally in the prepurge and ignition cycle and locks out after 5 seconds ca.	The photoresistance is dirty.	Clear it.
	The photoresistance is defective.	Change it.
	Flame moves away or fails.	Check pressure and output of the fuel.
		Check air output.
		Change nozzle.
		Check the coil of solenoid valve.
Burner starts with an ignition delay.	The ignition electrodes are wrongly positioned.	Adjust them according to the instructions of this manual.
	Air output is too high.	Set the air output.
	Nozzle dirty or worn.	Replace it.

WARNING

The manufacturer cannot accept responsibility for any damage to persons, animals or property due to error in installation or in the burner adjustment, or due to improper or unreasonable use or non observance of the technical instruction enclosed with the burner, or due to the intervention of unqualified personnel.