RIELLO

GB

Dual fuel gas oil/ gas burner

Two-stage progressive or modulating operation gas side / two-stage gas oil side

CE

RLS B10

CODE	MODEL	TYPE
20034278	RLS 250/M MZ	1302 T

20034293 (5) - 09/2013

Original instructions

1 Declaration ... 3

2 Information and general warnings ... 4
2.1 Information about the instruction manual ... 4
2.1.1 Introduction ... 4
2.1.2 General dangers ... 4
2.1.3 Other symbols ... 4
2.1.4 Delivery of the system and the instruction manual ... 5
2.2 Guarantee and responsibility ... 5
2.3 Guidance for the use of bio fuel blends up to 10% ... 6
2.3.1 Information and general instructions ... 6
2.3.2 Product Disclaimer Statement ... 6

3 Safety and prevention ... 7
3.1 Introduction ... 7
3.2 Safety warnings ... 7
3.3 Basic safety rules ... 7
3.4 Personnel training ... 7

4 Technical description of the burner ... 8
4.1 Burner designation ... 8
4.2 Models available ... 8
4.3 Countries of destination - Burner categories ... 9
4.4 Technical data ... 9
4.5 Electrical data ... 10
4.6 Packaging - Weight ... 10
4.7 Overall dimensions ... 11
4.8 Firing rate ... 11
4.9 Test boiler ... 12
4.9.1 Commercial boilers ... 12
4.9.2 Modulation ratio ... 12
4.10 Burner description ... 13
4.11 Standard equipment ... 13

5 Installation ... 14
5.1 Notes on safety for the installation ... 14
5.2 Handling ... 14
5.3 Preliminary checks ... 14
5.4 Installer/Servicer notes for the use of Gas oil with Bio blends up to 10% ... 15
5.5 Operating position ... 15
5.6 Preparing the boiler ... 15
5.6.1 Boring the boiler plate ... 15
5.6.2 Blast tube length ... 16
5.7 Securing the burner to the boiler ... 16
5.8 Nozzles ... 16
5.8.1 Choice of nozzles for 1st and 2nd stage ... 17
5.8.2 Nozzle assembly ... 17
5.9 Electrode position ... 18
5.10 Burner closing ... 18
5.11 Servomotor ... 18
5.12 Gas oil supply ... 19
5.12.1 Double-pipe circuit ... 19
5.12.2 The loop circuit ... 19
5.12.3 Single-pipe circuit ... 20
5.13 Hydraulic system layout ... 20
5.14 Hydraulic connections ... 21
5.15 Pump ... 21
5.16 Gas feeding line ... 23

5.16.1 Gas train 24
5.16.2 Gas train installation 24
5.16.3 Gas pressure 24
5.17 Electrical wiring 25
5.17.1 Electrical connections 25
5.18 Calibration of thermal relay 26
5.19 Current to the UV photocell 26

6 Start-up, calibration and operation of the burner 27
6.1 Notes on safety for the first start-up 27
6.2 Adjustment before first firing (gas oil operation) 27
6.2.1 Combustion head setting 27
6.2.2 Pump adjustment 27
6.2.3 Fan gate adjustment 27
6.3 Burner calibration (gas oil operation) 27
6.3.1 Firing 27
6.3.2 Operation 28
6.4 Adjustment before first firing (gas operation) 28
6.5 Burner starting (gas operation) 29
6.6 Burner firing (gas operation) 29
6.7 Burner calibration (gas operation) 29
6.7.1 Firing output 29
6.7.2 MAX burner output 29
6.7.3 MIN burner output 30
6.7.4 Intermediate outputs 30
6.8 Pressure switch adjustment 31
6.8.1 Air pressure switch 31
6.8.2 Maximum gas pressure switch 31
6.8.3 Minimum gas pressure switch 31
6.9 Combustion checks 32
6.10 Burner operation 32
6.10.1 Burner starting 32
6.10.2 Steady state operation 32
6.10.3 Firing failure 32
6.10.4 Burner flame goes out during operation 32

7 Maintenance 33
7.1 Notes on safety for the maintenance 33
7.2 Maintenance programme 33
7.2.1 Maintenance frequency 33
7.2.2 Checking and cleaning 33
7.3 Opening the burner 35
7.4 Closing the burner 35

8 Faults - Possible causes - Solutions 36

A Appendix - Accessories (optional) 41

B Appendix - Electrical panel layout 42

1 Declaration

Declaration of conformity in accordance with ISO / IEC 17050-1		
Manufacturer:	RIELLO S.p.A.	
Address:	Via Pilade Riello, 7 37045 Legnago (VR)	
Product:	Dual fuel gas oil/ gas burner	
Model:	RLS 250/M MZ	
These products are in compliance with the following Technical Standards:		
EN 676		
EN 267		
EN 12100		
and according to the European Directives:		
GAD	2009/142/EC	Gas Appliances Directive
MD	2006/42/EC	Machine Directive
LVD	2006/95/EC	Low Voltage Directive
EMC	2004/108/EC	Electromagnetic Compatibility
Such products are marked as follows:		
CE	CE-0085CM0153	

The quality is guaranteed by a quality and management system certified in accordance with UNI EN ISO 9001.

Manufacturer's Declaration			
RIELLO S.p.A. declares that the following products comply with the NOx emission limits specified by German standard "**1. BImSchV release 26.01.2010**".			
Product	Type	Model	Power
Dual fuel gas oil/ gas burner	1302 T	RLS 250/M MZ	550 - 2460kW

Legnago, 09.04.2013

Executive Director
RIELLO S.p.A. - Burner Department
Mr. I. Zinna

Research & Development Director
RIELLO S.p.A. - Burner Department
Mr. R. Cattaneo

2 Information and general warnings

2.1 Information about the instruction manual

2.1.1 Introduction

The instruction manual supplied with the burner:

- ➤ is an integral and essential part of the product and must not be separated from it; it must therefore be kept carefully for any necessary consultation and must accompany the burner even if it is transferred to another owner or user, or to another system. If the manual is lost or damaged, another copy must be requested from the Technical Assistance Service of the area;
- ➤ is designed for use by qualified personnel;
- ➤ offers important indications and instructions relating to the installation safety, start-up, use and maintenance of the burner.

Symbols used in the manual

In some parts of the manual you will see triangular DANGER signs. Pay great attention to these, as they indicate a situation of potential danger.

2.1.2 General dangers

The **dangers** can be of **3 levels**, as indicated below.

DANGER

Maximum danger level!
This symbol indicates operations which, if not carried out correctly, cause serious injury, death or long-term health risks.

WARNING

This symbol indicates operations which, if not carried out correctly, may cause serious injury, death or long-term health risks.

CAUTION

This symbol indicates operations which, if not carried out correctly, may cause damage to the machine and/or injury to people.

2.1.3 Other symbols

DANGER

DANGER: LIVE COMPONENTS

This symbol indicates operations which, if not carried out correctly, lead to electric shocks with lethal consequences.

DANGER: FLAMMABLE MATERIAL

This symbol indicates the presence of flammable materials.

DANGER: BURNING

This symbol indicates the risks of burns due to high temperatures.

DANGER: CRUSHING OF LIMBS

This symbol indicates the presence of moving parts: danger of crushing of limbs.

WARNING: MOVING PARTS

This symbol indicates that you must keep limbs away from moving mechanical parts; danger of crushing.

DANGER: EXPLOSION

This symbol signals places where an explosive atmosphere may be present. An explosive atmosphere is defined as a mixture - under atmospheric conditions - of air and flammable substances in the form of gases, vapours, mist or dust in which, after ignition has occurred, combustion spreads to the entire unburned mixture.

PERSONAL PROTECTION EQUIPMENT

These symbols indicate the equipment that must be worn and kept by the operator for protection against threats against safety and/or health while at work.

OBLIGATION TO ASSEMBLE THE HOOD AND ALL THE SAFETY AND PROTECTION DEVICES

This symbol signals the obligation to reassemble the hood and all the safety and protection devices of the burner after any maintenance, cleaning or checking operations.

ENVIRONMENTAL PROTECTION

This symbol gives indications for the use of the machine with respect for the environment.

IMPORTANT INFORMATION

This symbol indicates important information that you must bear in mind.

➤ This symbol indicates a list.

Abbreviations used

Ch.	Chapter
Fig.	Figure
Page	Page
Sec.	Section
Tab.	Table

2.1.4 Delivery of the system and the instruction manual

When the system is delivered, it is important that:

➤ the instruction manual is delivered to the user by the system manufacturer, with the recommendation to keep it in the room where the heat generator is to be installed.

➤ The instruction manual shows:
- the serial number of the burner;

  .....

- the address and telephone number of the nearest Assistance Centre.

  .....
  .....
  .....

➤ The system supplier must carefully inform the user about:
- the use of the system;
- any further tests that may be required before activating the system;
- maintenance, and the need to have the system checked at least once a year by a representative of the manufacturer or another specialised technician.
  To ensure a periodic check, the manufacturer recommends the drawing up of a Maintenance Contract.

2.2 Guarantee and responsibility

The manufacturer guarantees its new products from the installation date, in accordance with the regulations in force and/or the sales contract. At the moment of the first start-up, check that the burner is integral and complete.

WARNING

Failure to observe the information given in this manual, operating negligence, incorrect installation and carrying out of non authorised modifications will result in the annulment by the manufacturer of the guarantee that it supplies with the burner.

In particular, the rights to the guarantee and the responsibility will no longer be valid, in the event of damage to things or injury to people, if such damage/injury was due to any of the following causes:

➤ incorrect installation, start-up, use and maintenance of the burner;
➤ improper, incorrect or unreasonable use of the burner;
➤ intervention of unqualified personnel;
➤ carrying out of unauthorised modifications on the equipment;
➤ use of the burner with safety devices that are faulty, incorrectly applied and/or not working;
➤ installation of untested supplementary components on the burner;
➤ powering of the burner with unsuitable fuels;
➤ faults in the fuel supply system;
➤ continuation of use of the burner when a fault has occured
➤ repairs and/or overhauls incorrectly carried out;
➤ modification of the combustion chamber with inserts that prevent the regular development of the structurally established flame;
➤ insufficient and inappropriate surveillance and care of those burner components most likely to be subject to wear and tear;
➤ the use of non-original components, including spare parts, kits, accessories and optional;
➤ force majeure.

The manufacturer furthermore declines any and every responsibility for the failure to observe the contents of this manual.

Riello warranty is subject to correct burner, appliance and application matching, and set up in line with Riello's instructions and guidelines. All components within the hydraulic circuit suitable for bio fuel use and supplied by Riello will be identified as Bio compatible. No warranty is given in relation to the use of components which are not so identified with bio fuel blends. If in any doubt please contact Riello for further advice.

If any Riello burners are used with fuel with a bio content >10% then the components within the hydraulic circuit maybe affected and are not covered under warranty. The hydraulic circuit consists of;

- Pump
- Hydraulic ram (where applicable)
- Valve block
- Flexible oil lines (considered as a consumable component)

1. Irrespective of any warranty given by Riello in relation to normal use and manufacturing defects, when fuels not meeting the relevant standards are used, or where fuel storage issues have not been addressed correctly, or the equipment used is not compatible, if failures occur which are directly or indirectly attributed to such issues and/or to the non-observance of this guidance, then no warranty or liability is implied or accepted by Riello.
2. Riello have carefully chosen the specification of the bio compatible components including the flexible oil lines to protect the pump, safety value and nozzle. The Riello warranty is dependent upon the use of Riello genuine components including the oil lines, being used.
3. Riello warranty does not cover defects arising from incorrect commissioning or servicing by non Riello employed service engineers, and any issues impacting the burner arising from external site related issues.

2.3 Guidance for the use of bio fuel blends up to 10%

Background

With increasing focus on renewable and sustainable energy requirements, Bio fuel usage is set to increase. Riello is committed to promoting energy conservation and the use of renewable energy from sustainable resources including liquid bio fuels, however there are some technical aspects that must be considered at the planning stage of using such fuels to reduce the potential for equipment failure or the risks of fuel leakage.

Liquid Bio fuel is a generic description used for oil that can come from numerous feed stocks including recycled cooking oils. These types of oils have to be considered and treated differently from standard mineral or fossil fuels, as they are generally more acidic, hydroscopic and less stable.

Due to this, a holistic approach is needed from the specification of the liquid Bio fuel, the storage of the fuel, its oil supply line and ancillary equipment, and very importantly the oil filtration and the burner itself. The specification for FAME (Fatty Acids Methyl Ester) liquid Bio fuel is critical to reliable equipment operation.

It is a minimum requirement that the fuel blend (up to 10% Bio) is obtained with gasoil in accordance with the relevant EN standards, regional regulations and FAME in accordance with EN 14214. It is also important that the fuel blends meet the requirements related to operational environment conditions within the relevant EN standards.

When choosing your Riello oil products where you know Bio fuels will be in use, please make sure that a Bio compatible burner and/or components have been supplied. If an existing burner is to be used with a liquid Bio fuel then a kit may be required to make it compatible and the guidance notes enclosed concerning oil storage and filtration must be adhered to. The end user is responsible for the thorough verification of the potential risks associated with the introduction of a bio fuel blend and the suitability of the appliances and installation applicable.

Irrespective of any warranty given by Riello in relation to normal use and manufacturing defects, when fuels not meeting the relevant standards are used, or where fuel storage issues have not been addressed correctly, or the equipment used is not compatible, if failures occur which are directly or indirectly attributed to such issues and/or to the non-observance of this guidance, then no warranty or liability is implied or accepted by Riello.

2.3.1 Information and general instructions

To ensure consistency, the supplier of the fuel must be able to demonstrate compliance with a recognised Quality Control and management system to ensure high standards are maintained within the storage, blending and delivery processes. The installation oil storage tank and its ancillaries must also be prepared BEFORE liquid Bio fuel is introduced. Checks and preparation should include;

- ➤ For new installations, make sure that all materials and seals in the oil storage and supply line to the burner are compatible with Bio fuels. For all installations, there must be a good quality bio compatible oil filter at the tank and then a secondary filter of 100 Microns protecting the burner from contamination.
- ➤ If an existing oil storage tank is to be used then in addition to the materials checks as detailed above, it will be essential that the tank is first inspected for condition and checked for water or other contamination. Riello strongly recommends that the tank is cleaned and oil filters replaced prior to Bio fuel delivery. If this is not completed then due to the hydroscopic nature of Bio fuel, it will effectively clean the tank, absorb water present which in turn will result in equipment failure that is not covered by the manufacturer's warranty.
- ➤ Depending on the capacity of the oil storage tank and oil usage, fuels may remain static within the tank for some considerable time and so Riello recommends that the oil distributor is consulted regarding the use of additional Biocides within the fuel to prevent microbial growth from occurring within the tank. Riello suggests that fuel suppliers and or service companies are contacted for guidance on fuel filtration. Special attention should be applied to duel fuel applications where oil may be stored for long periods of time.
- ➤ The burner must be set according to the appliance application and commissioned checking that all combustion parameters are as recommended in the appliance technical manual.
- ➤ Riello recommends that the in line and burner oil pump filters are inspected and if required replaced at least every 4 months during burner use, before the burner start-up following a long period of discontinue operation and even more frequently where contamination has occurred. Particular attention is needed when inspecting and checking for fuel leakages from seals, gaskets and hoses.

2.3.2 Product Disclaimer Statement

CAREFULLY READ THE FOLLOWING DISCLAIMER. YOU ACCEPT AND AGREE TO BE BOUND BY THIS DISCLAIMER BY PURCHASING RIELLO BIO COMPATIBLE BURNERS AND/OR COMPONENTS.

Although the information and recommendations (hereinafter "Information") in this guidance is presented in good faith, believed to be correct and has been carefully checked, Riello (and its subsidiaries) makes no representations or warranties as to the completeness or accuracy of the Information. Information is supplied upon the condition that the persons receiving same will make their own determination as to its suitability for their purposes prior to use. In no event will Riello (and its subsidiaries) be responsible for damages of any nature whatsoever resulting from the use of or reliance upon Information.

Other than set forth herein, Riello (and its subsidiaries) makes no additional warranties with respect to the bio compatible burner, either express or implied, including that of merchantability or fitness for a particular purpose or use.

In no event shall Riello (and its subsidiaries) be liable for any indirect, incidental, special or consequential damages including, without limitation, loss of profits, damages for loss of business profits, business interruption, loss of business information, loss of equipment, or other pecuniary loss or compensation for services whether or not it is advised of the possibility of such damages.

With the exception of injuries to persons, Riello's liability is limited to the customer's right to return defective/non-conforming products as provided by the relevant product warranty.

3 Safety and prevention

3.1 Introduction

The burners have been designed and built in compliance with current regulations and directives, applying the known technical rules of safety and envisaging all the potential danger situations.

It is necessary, however, to bear in mind that the imprudent and clumsy use of the equipment may lead to situations of death risk for the user or third parties, as well as the damaging of the burner or other items. Inattention, thoughtlessness and excessive confidence often cause accidents; the same applies to tiredness and sleepiness.

It is a good idea to remember the following:

➤ The burner must only be used as expressly described. Any other use should be considered improper and therefore dangerous.

In particular:

it can be applied to boilers operating with water, steam, diathermic oil, and to other uses expressly named by the manufacturer; the type and pressure of the fuel, the voltage and frequency of the electrical power supply, the minimum and maximum deliveries for which the burner has been regulated, the pressurisation of the combustion chamber, the dimensions of the combustion chamber and the room temperature must all be within the values indicated in the instruction manual.

➤ Modification of the burner to alter its performance and destinations is not allowed.
➤ The burner must be used in exemplary technical safety conditions. Any disturbances that could compromise safety must be quickly eliminated.
➤ Opening or tampering with the burner components is not allowed, apart from the parts requiring maintenance.
➤ Only those parts detailed as available as spare parts by the Manufacturer can be replaced.

3.2 Safety warnings

The dimension of the boiler's combustion chamber must respond to specific values, in order to guarantee a combustion with the lowest polluting emissions rate.

The Technical Service Personnel will be glad to give you all the imformation for a correct matching of this burner to the boiler.

This burner must only be used for the application it was designed for.

The manufacturer accepts no liability within or without the contract for any damage caused to people, animals and property due to installation, adjustment and maintenance errors or to improper use.

3.3 Basic safety rules

➤ Children or inexpert persons must not use the appliance.
➤ Under no circumstances must the intake grids, dissipation grids and ventilation vents in the installation room be covered up with cloths, paper or any other material.
➤ Unauthorised persons must not attempt to repair the appliance.
➤ It is dangerous to pull or twist the electric leads.
➤ Cleaning operations must not be performed if the appliance is not disconnected from the main power supply.
➤ Do not clean the burner or its parts with inflammable substances (e.g. petrol, alcohol, etc.). The cover must be cleaned with soapy water.
➤ Do not place anything on the burner.
➤ Do not block or reduce the size of the ventilation vents in the installation room.
➤ Do not leave containers and inflammable products or combustible materials in the installation room.

3.4 Personnel training

The user is the person, body or company that has acquired the machine and intends to use it for the specific purpose. He is responsible for the machine and for the training of the people working around it.

The user:

➤ undertakes to entrust the machine exclusively to suitably trained and qualified personnel;
➤ must take all the measures necessary to prevent unauthorised people gaining access to the machine;
➤ undertakes to inform his personnel in a suitable way about the application and observance of the safety instructions. With that aim, he undertakes to ensure that everyone knows the use and safety instructions for his own duties;
➤ must inform the manufacturer if faults or malfunctioning of the accident prevention systems are noticed, along with any presumed danger situation.
➤ Personnel must always use the personal protective equipment envisaged by legislation and follow the indications given in this manual.
➤ Personnel must observe all the danger and caution indications shown on the machine.
➤ Personnel must not carry out, on their own initiative, operations or interventions that are not within their province.
➤ Personnel must inform their superiors of every problem or dangerous situation that may arise.
➤ The assembly of parts of other makes, or any modifications, can alter the characteristics of the machine and hence compromise operating safety. The manufacturer therefore declines any and every responsibility for any damage that may be caused by the use of non-original parts.

4 Technical description of the burner

4.1 Burner designation

Series : R

Fuel :		
	S	Natural gas
	L	Gas oil
	LS	Gas oil / Methane
	N	Heavy oil

Size

Setting :		
	/1	Single stage
	...	Two stage
	/M	Modulating

Emission :		
	C11 or ...	Class 1 EN267 - EN676
	C22 or MZ	Class 2 EN267 - Class 2 EN676
	C33 or BLU	Class 3 EN267 - EN676
	C23 or MX	Class 2 EN267 - Class 3 EN676
	C13	Class 1 EN267 - Class 3 EN676

Head :		
	TC	Standard head
	TL	Extended head

Flame control system :

FS1	Standard (1 stop every 24 h)
FS2	Continuos working (1 stop every 72 h)

Electrical supply to the system :

1 / 230/50	1 / 230V / 50Hz
3 / 230 / 50	3 / 230V / 50Hz
3 / 400 / 50	3N / 400V / 50Hz
3 / 230-400 / 50	3 / 230V / 50Hz - 3N / 400V / 50Hz
3 / 220 / 60	3 / 220V / 60Hz
3 / 380 / 60	3N / 380V / 60Hz
3 / 220-380 / 60	3 / 220V / 60Hz - 3N / 380V / 60Hz

Auxiliary voltage :

230/50/60	230V / 50-60Hz
110/50/60	110V / 50-60Hz

R	LS	250	/M	MZ	TC	FS1	3/230-400/50	230/50

BASIC DESIGNATION

EXTENDED DESIGNATION

4.2 Models available

Designation		Electrical supply	Code
RLS 250/M MX	TC	3/230-400/50	20034278

Tab. A

4.3 Countries of destination - Burner categories

Country of destination	Gas category
IT - AT - GR - DK - FI - SE - EE - CZ - HU - LT - SK - BG - LV - SI - PL	$^{II}2H3B/P$
ES - GB - IE - PT	$^{II}2H3P$
NL	$^{II}2L3B/P$
FR	$^{II}2Er3P$
DE	$^{II}2ELL3B/P$
BE	$^{I}2E(R)B$, $^{I}3P$
LU	$^{II}2E3B/P$
NO - CY - MT	$^{I}3B/P$
RO	$^{I}2H$

Tab. B

4.4 Technical data

Model			RLS 250/M MZ
Type			1302 T
Output (1) Delivery (1)	2nd stage	kW kg/h	1230 - 2460 104 - 207
	min. 1st stage	kW kg/h	550 47.5
Fuel			Gas oil, viscosity at 20 °C: 6 mm^2/s max (1,5 °E - 6 cSt) Gas oil and Blends of gas oil and bio fuel (FAME in accordance with EN 14214) up to 10% Natural gas: G20 (methane) - G21 - G22 - G23 - G25
Gas pressure at maximum delivery (2) Gas: G20/G25		mbar	42.9/55.7
Operation			- Intermittent (min. 1 stop in 24 hours) - Gas oil: two-stage (high and low flame) and single-stage (all - nothing) - Gas: Progressive two-stage or modulating by kit (see Appendix - Accessoires)
Nozzles		number	2
Standard applications			Boilers: water, steam, diathermic oil
Ambient temperatur		°C	0 - 40
Combustion air temperature		°C max	60
Pump	delivery (at 12 bar) pressure range fuel temperatur	kg/h bar ° C max	230 10 - 21 90
Noise levels (3)		dB(A)	85

Tab. C

(1) Reference conditions: ambient temperature 20°C - Barometric pressure 1013 mbar - Altitude 0 m a.s.l.
(2) Pressure at test point 4)(Fig. 6 at page 13) with zero pressure in the combustion chamber and maximum burner output.
(3) Sound pressure measured in manufacturer's combustion laboratory, with burner operating on test boiler and at maximum rated output.

4.5 Electrical data

Motor IE1

Model		RLS 250/M MZ
Electrical supply	V/Ph/Hz	400/3/50
Auxiliary power supply	V/Ph/Hz	230/1N/50
Fan motor	rpm	2900
	V	230 / 400
	W	5500
Running current	A	21.6 - 12.5
Start-up current	A	144 - 83
Pump motor	V	220/240
	W	550
	A	3,6
Pump motor capacitor	µF	25
Ignition transformer	V1 - V2	230 V - 2 x 5 kV
	I1 - I2	1.9 A - 30 mA
Electrical power consumption gas oil	W max	7500
gas		6000
Electrical protection		IP 44

Tab. D

Motor IE2

Model		RLS 250/M MZ
Electrical supply	V/Ph/Hz	400/3/50
Auxiliary power supply	V/Ph/Hz	230/1N/50
Fan motor	rpm	2920
	V	230 / 400
	W	5500
Running current	A	18 - 10.4
Start-up current	A	120 - 69
Pump motor	V	220/240
	W	550
	A	3,6
Pump motor capacitor	µF	25
Ignition transformer	V1 - V2	230 V - 2 x 5 kV
	I1 - I2	1.9 A - 30 mA
Electrical power consumption gas oil	W max	7500
gas		6000
Electrical protection		IP 44

Tab. E

4.6 Packaging - Weight

The burners stands on a wooden base which can be lifted by fork-lifts. Outer dimensions of packaging are indicated in Tab. F.

The weight of the burner complete with packaging is indicated in Tab. F.

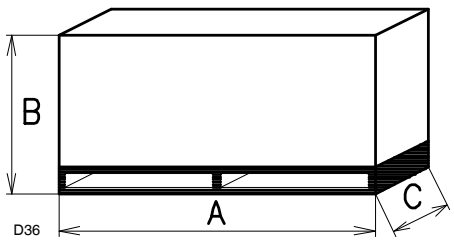

Fig. 1

mm	A	B	C	kg
RLS 250/M MZ	1400	765	1000	100

Tab. F

4.7 Overall dimensions

The maximum dimensions of the burner are given in Fig. 2.

Bear in mind that inspection of the combustion head requires the burner to be opened and the rear part withdrawn on the slide bars.

The maximum dimension of the burnerwhen open, without casing, is give in measurement I.

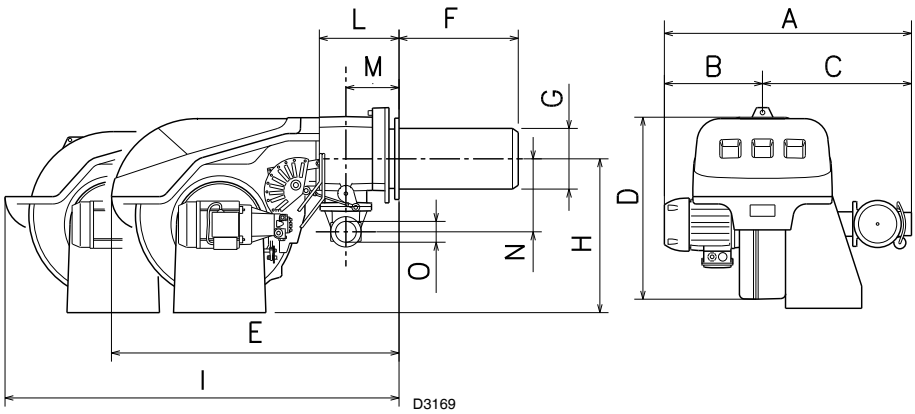

Fig. 2

mm	A	B	C	D	E	F (1)	G	H	I (1)	L	M	N	O
RLS 250/M MZ	904	427	477	555	863	412-542	222	435	1442-1587	237	141	186	Rp2

Tab. G

(1) Blast tube: short-long

4.8 Firing rate

During operation, burner output varies between:

- a **MAXIMUM OUTPUT**, selected within area A,
- and a **MINIMUM OUTPUT**, which must not be lower than the minimum limit in the diagram.

Model	kW	kg/h
RLS 250/M MZ	550	46

WARNING

The firing rate value (Fig. 3) has been obtained considering an ambient temperature of 20 °C, an atmospheric pressure of 1013 mbar (approx. 0 m above sea level), and with the combustion head adjusted as shown on pag. 27.

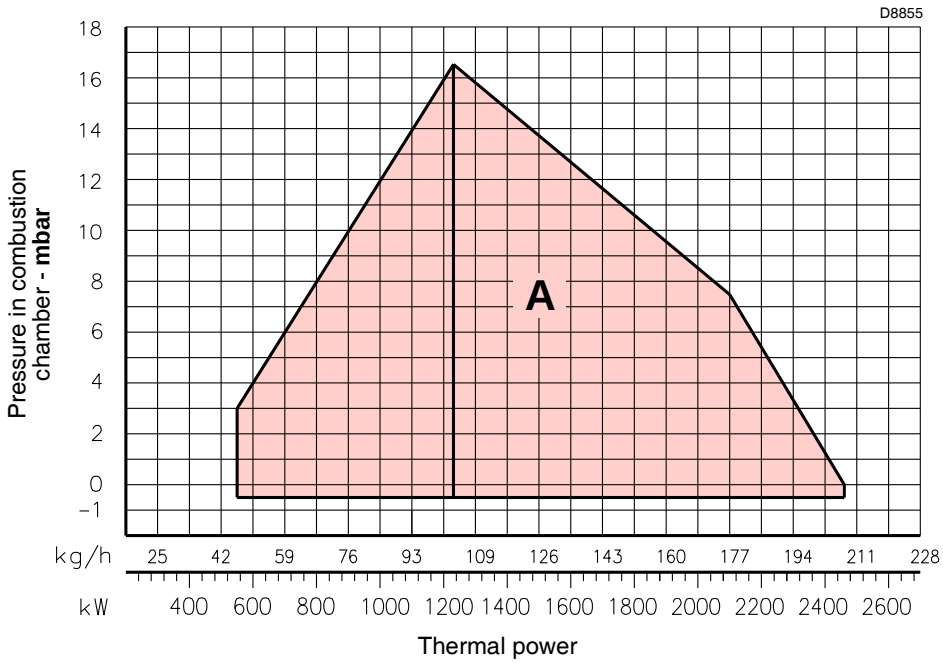

Fig. 3

4.9 Test boiler

The firing rate was set in relation to special test boilers, according to EN 676 regulations.

Fig. 4 indicates the diameter and length of the test combustion chamber.

Example:

output 650 Mcal/h: diameter = 60 cm; length = 2 m.

4.9.1 Commercial boilers

The burner is suitable for operation on boilers with combustion chambers featuring flow from the base (three flue passes) on which the best results are obtained in terms of low NOx emissions.

The maximum thickness of the boiler's front door must not exceed 250 mm. See Fig. 5.

The burner-boiler match is assured where the boiler is EC type-approved; for boilers and furnaces with combustion chambers featuring dimensions differing considerably from those given in the diagram (Fig. 4), it is advisable to perform preliminary tests.

4.9.2 Modulation ratio

The modulation ratio, determined using test boilers according to standard (EN 676 for gas, EN 267 for light oil), is:

– 4 : 1 (gas)
– 2 : 1 (gas oil)

In case of gas operation the burner can be used with a different modulation ratio depending on the application - contact the manufacturer for further information.

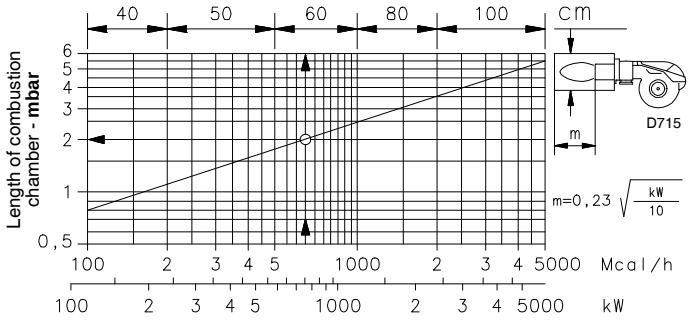

Fig. 4

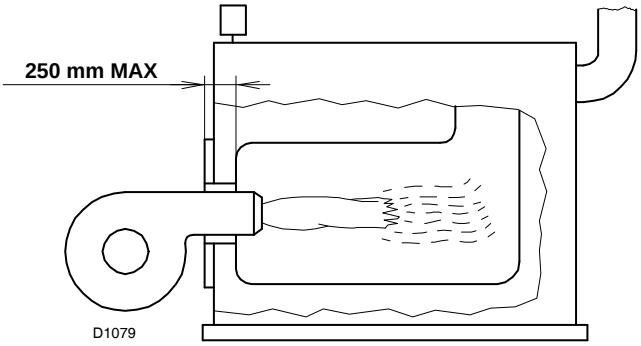

Fig. 5

4.10 Burner description

1 Flame stability disk
2 Ignition electrodes
3 Combustion head
4 Gas pressure test point and head fixing screw
5 Screw securing fan to sleeve
6 OIL/GAS selector
7 Relay
8 Slide bars for opening the burner and inspecting the combustion head
9 Control box with lock-out pilot light and lock-out reset button
10 Air gate valve
11 Air inlet to fan
12 Gas input pipework
13 Gas butterfly valve
14 Screw for combustion head adjustment
15 Sleeve with flange for securing the burner to the boiler
16 Max. gas pressure switch
17 Cell UV
18 Servomotor controlling the gas butterfly valve and of air gate valve (by means of a variable profile cam mechanism). When the burner is not operating the air gate valve is fully closed in order to reduce heat dispersion from the boiler due to the flue draught which draws air from the fan suction inlet.
19 Fan motor
20 Extensions for slide bars 8)
21 Switch for: automatic - manual - off operations
Button for: increase - reduction power
22 Motor contactor and thermal cut-out with reset button
23 Bracket for mounting the power regulator RWF40
24 Terminal strip
25 Fairleads for electrical connections by installer
26 Flame inspection window
27 Minimum air pressure switch (differential operating type)
28 Pump motor
29 Pump
30 Safety solenoid valve
31 1st and 2nd stage valves
32 Air pressure test point

Two types of burner failure may occur:

Control box lock-out:
if the control box 9)(Fig. 6) pushbutton lights up, it indicates that the burner is in lock-out. To reset, press the pushbutton.

Motor trip:
release by pressing the pushbutton on thermal relay 22)(Fig. 6).

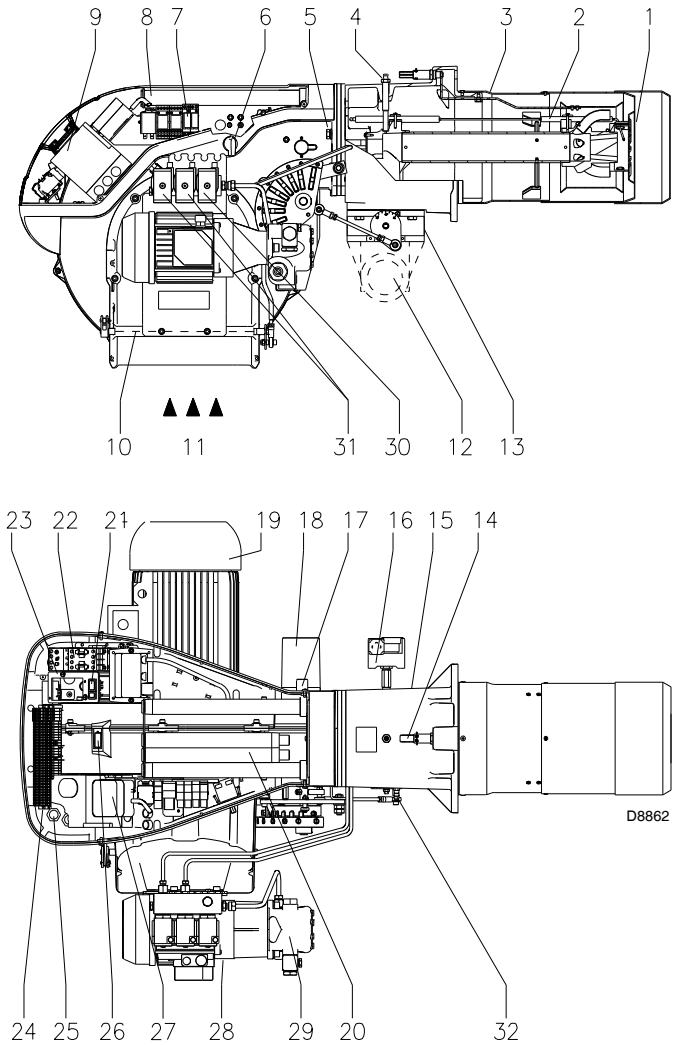

Fig. 6

4.11 Standard equipment

1 - Gas train flange
1 - Flange gasket
4 - Flange fixing screws (M10x40) to the butterfly valve
1 - Thermal insulation screen
4 - Screws (M16x40) to secure the burner sleeve with flange to the boiler
2 - Hoses
2 - Nipples for hoses with gaskets
1 - Instruction booklet
1 - Spare parts list

WARNING
In case of use with gas oil containing up to 10% Bio blend, it will be essential to use flexible oil lines suitable for bio fuel use.
Please contact Riello for further information.

5 Installation

5.1 Notes on safety for the installation

After carefully cleaning all around the area where the burner will be installed, and arranging the correct lighting of the environment, proceed with the installation operations.

DANGER

All the installation, maintenance and disassembly operations must be carried out with the electricity supply disconnected.

WARNING

The installation of the burner must be carried out by qualified personnel, as indicated in this manual and in compliance with the standards and regulations of the laws in force.

5.2 Handling

The packaging of the burner includes a wooden platform, so it is possible to move the burner (still packaged) with a transpallet truck or fork lift truck.

WARNING

The handling operations for the burner can be highly dangerous if not carried out with the greatest attention: keep any unauthorised people at a distance; check the integrity and suitableness of the available means of handling.
Check also that the area in which you are working is empty and that there is an adequate escape area (i.e. a free, safe area to which you can quickly move if the burner should fall).
When handling, keep the load at not more than 20-25 cm from the ground.

After positioning the burner near the installation point, correctly dispose of all residual packaging, separating the various types of material.

CAUTION

Before proceeding with the installation operations, carefully clean all around the area where the burner will be installed.

5.3 Preliminary checks

Checking the consignment

CAUTION

After removing all the packaging, check the integrity of the contents. In the event of doubt, do not use the burner; contact the supplier.

The packaging elements (wooden cage or cardboard box, nails, clips, plastic bags, etc.) must not be abandoned as they are potential sources of danger and pollution; they should be collected and disposed of in the appropriate places.

Checking the characteristics of the burner

Check the identification label of the burner, showing:
- ➤ the model (**A**)(Fig. 7) and type of burner (**B**);
- ➤ the year of manufacture, in cryptographic form (**C**);
- ➤ the serial number (**D**);
- ➤ the data for electrical supply and the protection level (**E**);
- ➤ the electrical input power (**F**);
- ➤ the types of gas used and the relative supply pressures (**G**);
- ➤ the data of the burner's minimum and maximum output possibilities (**H**) (see Firing rates)
  Warning. The output of the burner must be within the boiler's firing rate;
- ➤ the category of the device/countries of destination (**I**).
- ➤ gas oil (**L**) max. viscosity.

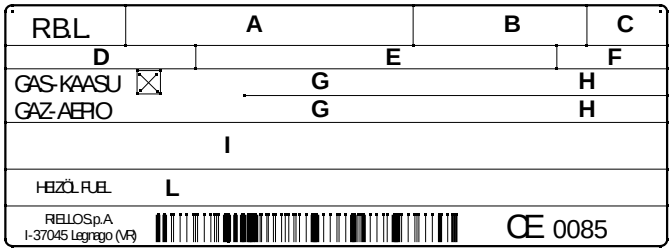

D9243

Fig. 7

WARNING

A burner label that has been tampered with, removed or is missing, along with anything else that prevents the definite identification of the burner makes any installation or maintenance work difficult.

5.4 Installer/Servicer notes for the use of Gas oil with Bio blends up to 10%

- During the burner installation, check that the gasoil and bio fuel blends are in accordance with Riello specifications (please refer to the chapters "Technical Data" and "Guidance for the use of bio fuel blends up to 10%" within the burner technical manual).
- If a Bio blend is in use the installer must seek information from the end user that their fuel supplier can evidence that the blends of fuel conform to the relevant standards.
- Check that the materials used in the construction of the oil tank and ancillary equipment are suitable for bio fuels, If not these must be upgraded or replaced with Bio compatible parts.
- Particular attention should be given to the oil storage tank and supply to the burner. Riello recommends that existing oil storage tanks are cleaned, inspected and any traces of water are removed BEFORE bio fuel is introduced (Contact the tank manufacturer or oil supplier for further advice). If these recommendations are not respected this will increase the risk of contamination and possible equipment failure.
- In line oil filters should be replaced making sure that they are Bio compatible. Riello recommends a good quality bio compatible oil filter at the tank and a secondary 100 micron filter are used to protect the burner pump and nozzle from contamination.
- The burner hydraulic components and flexible oil lines must be suitable for bio fuel use (check with Riello if in doubt). Riello have carefully chosen the specification of the bio compatible components including the flexible oil lines to protect the pump, safety value and nozzle. The Riello warranty is dependent upon the use of Riello genuine components including the oil lines, being used. The burner must be commissioned and combustion parameters set to appliance manufacturer's recommendations.
- Regularly check visually for any signs of oil leakage from seals, gaskets and hoses.
- It is strongly recommended that with Bio fuel use, oil filters are inspected and replaced every 4 months. More regularly where contamination is experienced.
- During extended periods of non operation and/or where burners are using oil as a standby fuel, it is strongly recommended that the burner is put into operation for shorts periods at least every three months.

5.5 Operating position

WARNING

- The burner is designed to operate only in positions **1**, **2**, **3** and **4** (Fig. 8).
- Installation **1** is preferable, as it is the only one that allows the maintenance operations as described in this manual.
- Installations **2**, **3** and **4** permit operation but make maintenance and inspection of the combustion head more difficult, pag. 33

DANGER

- Any other position could compromise the correct operation of the appliance.
- Installation **5** is prohibited for safety reasons.

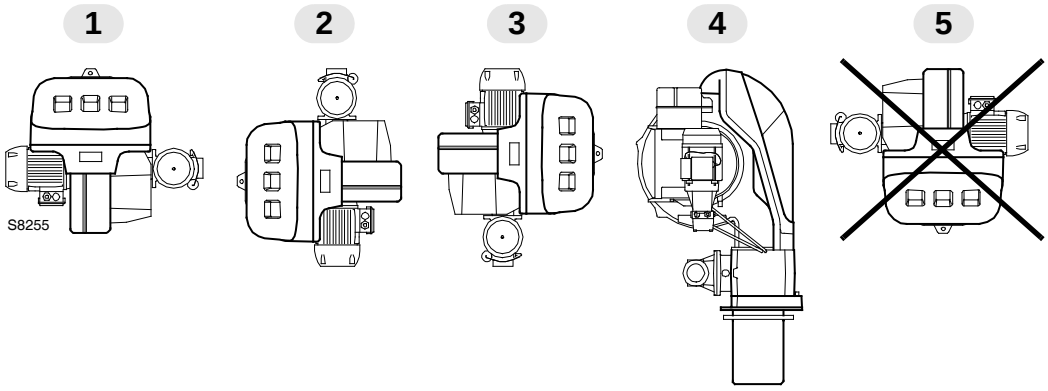

Fig. 8

5.6 Preparing the boiler

5.6.1 Boring the boiler plate

Drill the combustion chamber locking plate as shown in Fig. 9.

The position of the threaded holes can be marked using the thermal screen supplied with the burner.

mm	A	B	C
RLS 250/M MZ	230	325 - 368	M 16

Tab. H

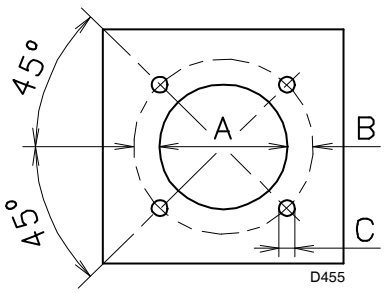

Fig. 9

5.6.2 Blast tube length

The length of the blast tube must be selected according to the indications provided by the manufacturer of the boiler, and in any case it must be greater than the thickness of the boiler door complete with its fettling.

The range of lengths available, L (mm), is as follows:

Blast tube 12)(Fig. 10)	Short	Long
RLS 250/M MZ	418	548

Tab. I

For boilers with front flue passes 15)(Fig. 10) or flame inversion chambers, protective fettling in refractory material 13) must be inserted between the boiler fettling 14) and the blast tube 12).

This protective fettling must not compromise the extraction of the blast tube.

For boilers having a water-cooled front the refractory fettling 13)-14)(Fig. 10) is not required unless it is expressly requested by the boiler manufacturer.

5.7 Securing the burner to the boiler

Detach the combustion head from the burner:

- ➤ disconnect the hoses by unscrewing the two connectors 6)(Fig. 10).
- ➤ Disengage the articulated coupling 7) from the graduated sector 8).
- ➤ Loosen the 4 screws 3) and remove the cover 1).
- ➤ Remove the screws 2) from the slide bars 5).
- ➤ Remove the 2 screws 4) and pull the burner back on slide bars 5) by about 100 mm.
- ➤ Disconnect the electrode wires and then pull the burner completely off the slide bars.
- ➤ Secure the sleeve with flange 11) to the boiler plate, interposing the thermal insulating screen 9) supplied with the burner.
- ➤ Use the 4 screws, also supplied with the unit, after first protecting the thread with an anti-locking product.

WARNING

The seal between burner and boiler must be airtight.

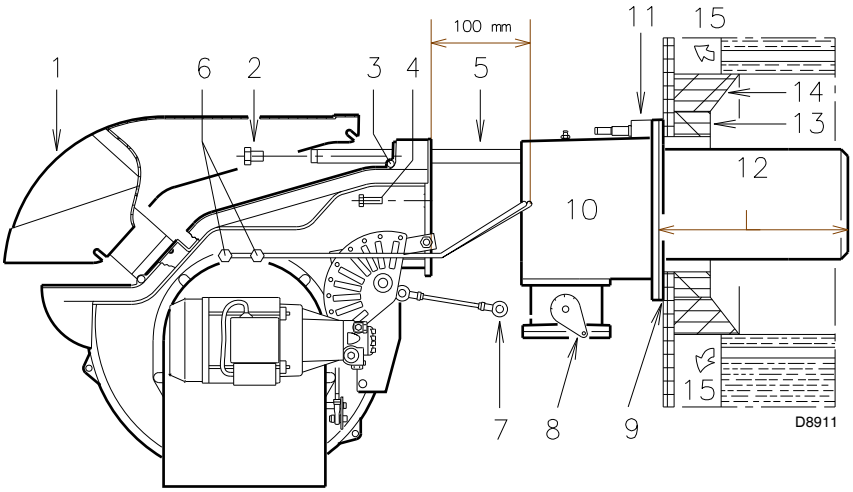

Fig. 10

5.8 Nozzles

The burner complies with the emission requirements of the EN 267 standard.

In order to guarantee that emissions do not vary, recommended and/or alternative nozzles specified by Riello in the Instruction and warning booklet should be used.

WARNING

It is advisable to replace nozzles every year during regular maintenance operations.

CAUTION

The use of nozzles other than those specified by Riello S.p.A. and inadequate regular maintenance may result into emission limits non-conforming to the values set forth by the regulations in force, and in extremely serious cases, into potential hazards to people and objects.

The manufacturing company shall not be liable for any such damage arising from nonobservance of the requirements contained in this manual.

5.8.1 Choice of nozzles for 1st and 2nd stage

Both nozzles must be chosen from among those listed in Tab. J.

The first nozzle determines the delivery of the burner in the 1st stage.

The second nozzle works together with the 1st nozzle to determine the delivery of the burner in the 2nd stage.

The deliveries of the 1st and 2nd stages must be contained within the value range indicated on pag. 9.

Use nozzles with a 60° spray angle at the recommended pressure of 12 bar.

As a rule the two nozzles have equal deliveries but the 1st stage nozzle may have a delivery less than 50% of the total delivery when a reduction of the counter-pressure peak is desired at the moment of starting (the burner allows good combustion rates also with a 40 - 100 % ratio between the 1st and 2nd stage).

Example

Boiler output = 1630 kW - efficiency 90 %
Output required by the burner: 1630 : 0.9 = 1812 kW
per nozzle: 1812 : 2 = 906 kW

therefore, two equal, 60°, 12 bar nozzles are required:
1° = 18 GPH - 2° = 18 GPH,
or the following two different nozzles:
1° = 16 GPH - 2° = 20 GPH

Nozzle DELAVAN B 60°

GPH	kg/h			kW
	10 bar	12 bar	14 bar	12 bar
12.0	44.16	48.73	52.96	582.36
13.0	47.84	52.79	57.38	630.89
14.0	51.52	56.86	61.79	679.42
15.0	55.20	60.92	66.20	727.95
16.0	58.88	64.98	70.62	776.48
17.0	62.57	69.04	75.03	825.01
18.0	66.25	73.10	79.44	873.54
19.0	69.93	77.16	83.86	922.07
20.0	73.61	81.22	88.27	970.60
22.0	80.97	89.34	97.10	1067.66
24.0	88.33	97.47	105.93	1164.72
25.0	92.00	101.53	110.34	1198.00
26.0	95.69	105.59	114.75	1261.78
28.0	103.05	113.71	123.58	1358.84
30.0	110.41	121.83	132.41	1455.90
32.0	117.77	129.95	141.24	1533.47
34.0	125.13	138.08	150.06	1629.31
35.0	128.81	142.14	154.48	1667.23

Tab. J

5.8.2 Nozzle assembly

- ➤ Remove screw 1)(Fig. 11) and extract the internal part 2).
- ➤ Fit two nozzles with the box spanner (16 mm) 1)(Fig. 12), after having removed the plastic plugs 2).
- ➤ Fitting the spanner through the central hole in the flame stability disk or loosen screws 1)(Fig. 13).
- ➤ Remove disk 2)(Fig. 13) and replace the nozzles using the wrench 3).

WARNING

Do not use any sealing products such as gaskets, sealing compound, or tape.
Be careful to avoid damaging the nozzle sealing seat. The nozzles must be screwed into place tightly but not to the maximum torque value provided by the wrench.

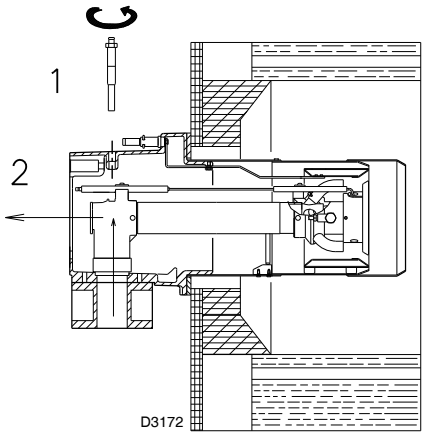

Fig. 11

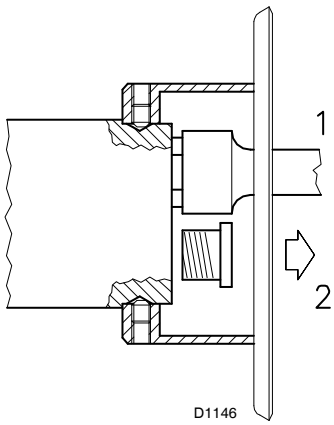

Fig. 12

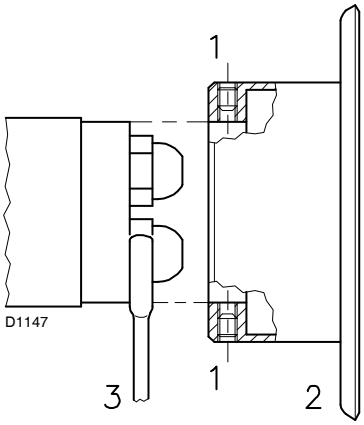

Fig. 13

The nozzle for the 1st stage of operation is the one lying beneath the firing electrodes (Fig. 14).

5.9 Electrode position

WARNING

Make sure that the electrodes are positioned as shown in Fig. 14.

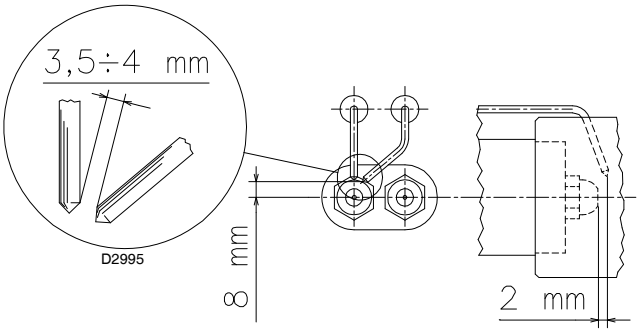

Fig. 14

5.10 Burner closing

- ➤ Refit the burner to the slide bars 3)(Fig. 15) at approximately 100 mm from the sleeve 4) - burner positioned as shown in Fig. 10 at page 16.
- ➤ Insert the ignition electrode cables and then slide the burner up to the sleeve so that it is positioned as shown in Fig. 15.
- ➤ Refit screws 2)(Fig. 15) on slide bars 3).
- ➤ Secure the burner to the sleeve by tightening screws 1).
- ➤ Connect the oil pipes again by screwing on the two connectors.
- ➤ Reconnect the articulation 7) to the graduated sector 5).

WARNING

When fitting the burner on the two slide bars, it is advisable to gently draw out the high tension cables until they are slightly stretched.

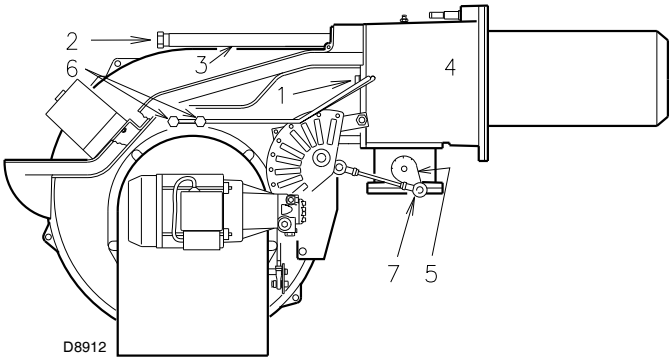

Fig. 15

5.11 Servomotor

The servomotor (Fig. 16) provides simultaneous adjustment of the air gate valve, by means of the variable profile cam, and the gas butterfly valve.

The servomotor rotates through 130 degrees in 33 seconds.

Do not alter the factory setting for the 5 cams; simply check that they are set as indicated below:

Cam I : 130°
Limits rotation toward maximum position.
When the burner is at max output the gas butterfly valve must be fully open: 90°.

Cam II : 0°
Limits rotation toward the minimum position.
When the burner is shut down the air gate valve and the gas butterfly valve must be closed: 0°.

Cam III : 40° (gas)
Adjusts the ignition position and the MIN output.

Cam IV : 70° (gas oil)
Adjusts the ignition position and the 1st stage output.

Cam V : 100°
Determines when the 2nd stage diesel oil valve opens.

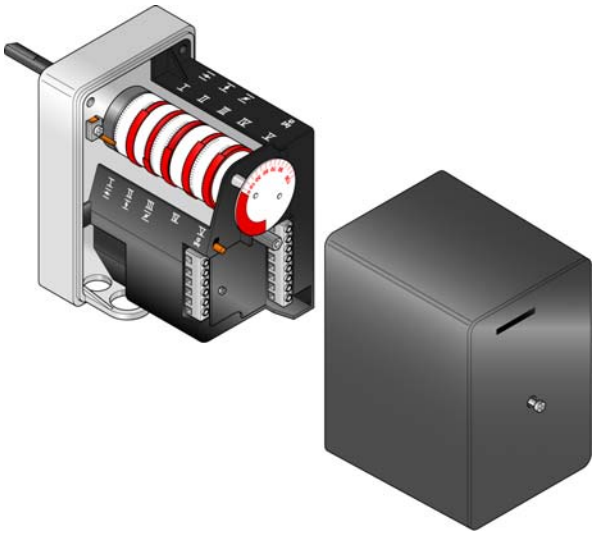

Fig. 16

5.12 Gas oil supply

WARNING

Where gas oil containing bio diesel is in use, it is recommended to avoid over oxygenation of the blended fuels.
Where at all possible avoid the use of two pipe systems where the circulated fuel is returned to the tank.
If this cannot be avoided make sure that the return pipe is normally below the surface of the fuel level within the storage tank.

WARNING

In case of use with gas oil containing up to 10% Bio blend, it will be essential to use flexible oil lines suitable for bio fuel use.

Please contact Riello for further information.

DANGER

It is strongly recommended a periodic check of the pump pressure operation (annually or better every six months, if the burner operation is continuous).

CAUTION

You are advised to use additional filters on the fuel supply line.
Riello recommends a good quality fuel filter at the tank (Fig. 17 - Fig. 18) and a secondary filter (100 µ for gas oil and 15 µ for kerosene) are used to protect the burner pump and nozzle from contamination.
In case of Biodiesel use, pay attention to install Biocompatible filters.

5.12.1 Double-pipe circuit

The burner is equipped with a self-priming pump which is capable of feeding itself within the limits listed in the Tab. K.

The tank higher than the burner A (Fig. 17)

The distance "P" must not exceed 10 meters in order to avoid subjecting the pump's seal to excessive strain; the distance "V" must not exceed 4 meters in order to permit pump self-priming even when the tank is almost completely empty.

The tank lower than the burner B (Fig. 17)

Pump depression values higher than 0.45 bar (35 cm Hg) must not be exceeded because at higher levels gas is released from the fuel, the pump starts making noise and its working life-span decreases.
It is good practice to ensure that the return and suction lines enter the burner from the same height; in this way it will be more improbable that the suction line fails to prime or stops priming.

5.12.2 The loop circuit

A loop circuit consists of a loop of piping departing from and returning to the tank with an auxiliary pump that circulates the fuel under pressure.

A branch connection from the loop goes to feed the burner.

This circuit is extremely useful whenever the burner pump does not succeed in self-priming because the tank distance and/or height difference are higher than the values listed in the Tab. K.

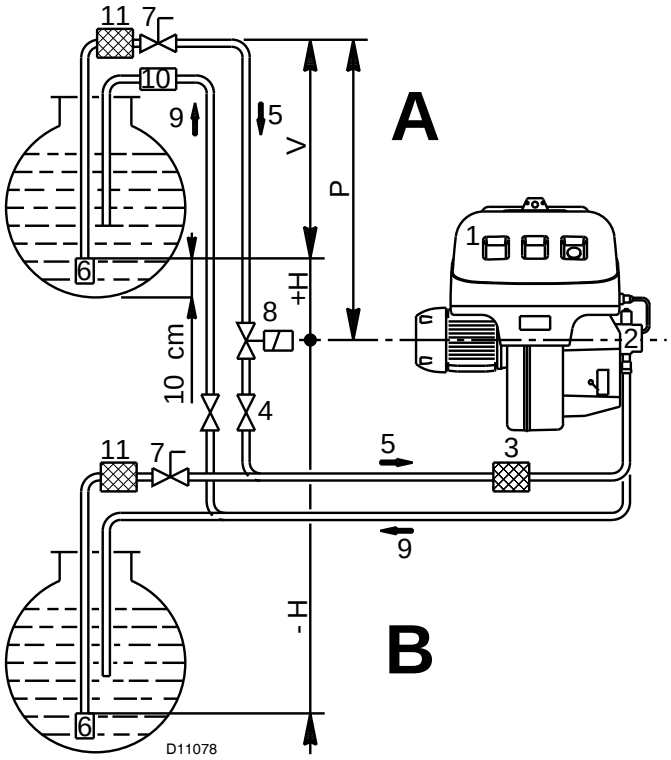

Fig. 17

Key (Fig. 17)
H Pump/Foot valve height difference
L Piping length
ø Inside pipe diameter
1 Burner
2 Pump
3 Filter
4 Manual on/off valve
5 Suction line
6 Foot valve
7 Rapid closing manual valve remote controlled (only Italy)
8 On/off solenoid valve (only Italy)
9 Return line
10 Check valve (only Italy)
11 Tank filter

+/- H	L (meters)		
(meters)	ø 8 mm	ø 10 mm	ø 12 mm
+ 4	71	138	150
+ 3	62	122	150
+ 2	53	106	150
+ 1	44	90	150
+ 0.5	40	82	150
0	36	74	137
- 0.5	32	66	123
- 1	28	58	109
- 2	19	42	81
- 3	10	26	53
- 4	-	10	25

Tab. K

5.12.3 Single-pipe circuit

In order to obtain single-pipe working it is necessary to unscrew the return hose, remove the by-pass screw 6)(Fig. 19) and then screw the plug 7)(Fig. 19).

The distance “P” must not exceed 10 meters in order to avoid subjecting the pump's seal to excessive strain; the distance "V" must not exceed 4 meters.

For the priming pump loosen the screw 3)(Fig. 21) in order to bleed off the air contained in the suction line and wait until the fuel flows out.

Key (Fig. 18)
H Pump/Foot valve height difference
L Piping length
ø Inside pipe diameter
1 Burner
2 Pump
3 Filter
4 Manual on/off valve
5 Suction line
6 Foot valve
7 Rapid closing manual valve remote controlled (only Italy)
8 On/off solenoid valve (only Italy)
11 Tank filter

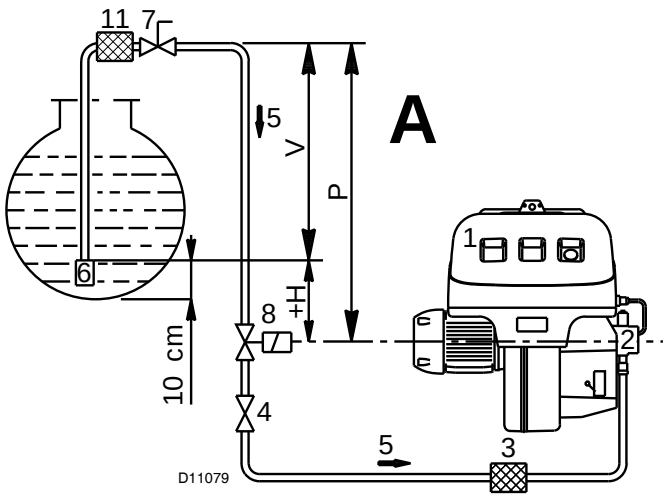

Fig. 18

+H	L (meters)		
(meters)	ø 8 mm	ø 10 mm	ø 12 mm
4	71	138	150
3	62	122	150
2	53	106	150
1	44	90	150
0.5	40	82	150

Tab. L

5.13 Hydraulic system layout

Key Fig. 19
1 Pump suction
2 Filter
3 Pump
4 Pressure governor
5 Return pipe
6 By-pass screw
7 Pump return
8 Safety solenoid
9 1st stage valve
10 2nd stage valve
11 Filter
M Pressure gauge
V Vacuometer

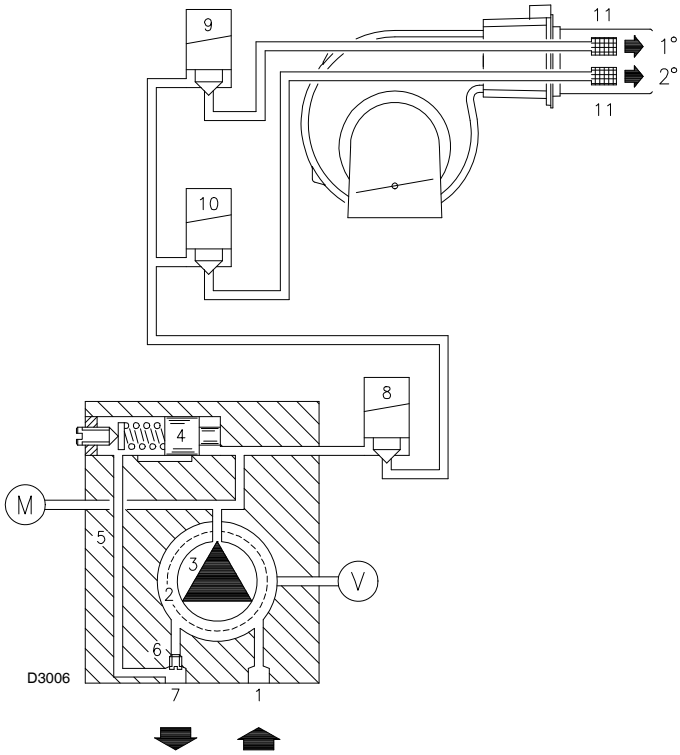

Fig. 19

5.14 Hydraulic connections

The pumps are equipped with a by-pass that connects return line and suction line. The pumps are installed on the burner with the by-pass closed by screw 6)(Fig. 19).

It is therefore necessary to connect both hoses to the pump.

The pump will break immediately if it is run with the return line closed and the by-pass screw inserted.

➤ Remove the plugs from the suction and return connections of the pump.

➤ Insert the hose connections with the supplied seals into the connections and screw them down.

➤ Take care that the hoses are not stretched or twisted during installation.

➤ Install the hoses where they cannot be stepped on or come into contact with hot surfaces of the boiler and where they do not hamper the opening of the burner.

➤ Now connect the other end of the hoses to the suction and return lines by using the supplied nipples.

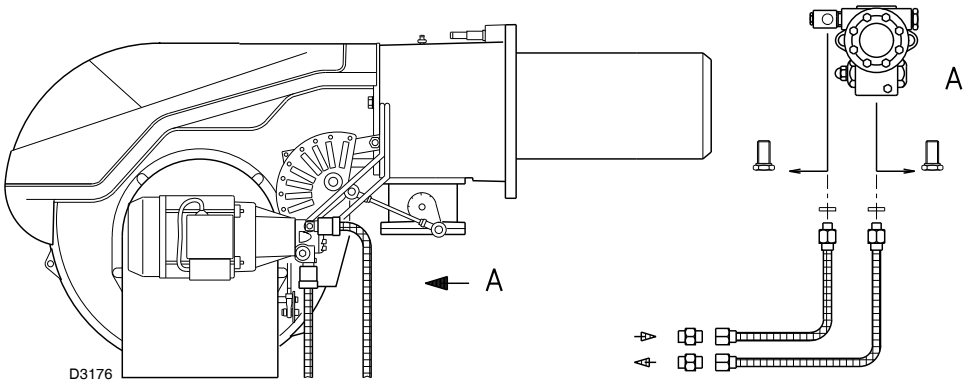

Fig. 20

5.15 Pump

WARNING

In case of use with gas oil containing up to 10% Bio blend, it will be essential to use flexible oil lines suitable for bio fuel use.
Please contact Riello for further information.

Technical data

Suntec E7CC

Min. delivery rate at 12 bar pressure	kg/h	230
Delivery pressure range	bar	10 - 30
Max. suction depression	bar	0.45
Viscosity range	mm^2/s (cSt)	3 - 75
Max. gas oil temperature	°C	90
Max. suction and return pressure	bar	1.5
Pressure calibration in the factory	bar	12
Filter mesh width	mm	0.17

Tab. M

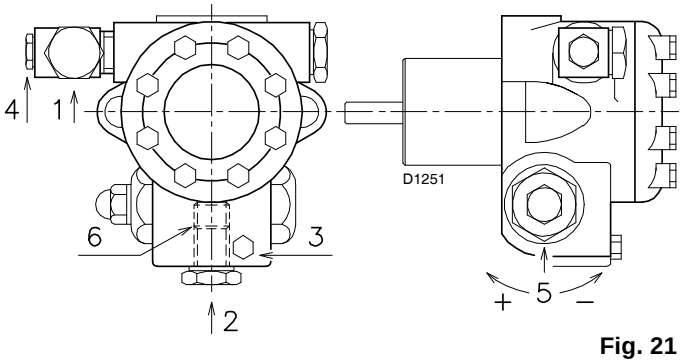

Fig. 21

Key Fig. 21

1	Suction	G 1/2”
2	Return	G 1/2”
3	Pressure gauge attachment	G 1/8”
4	Vacuum meter attachment	G 1/2”
5	Pressure adjustment screw	
6	By-pass screw	

Pump priming

WARNING

Before starting the burner, make sure that the tank return line is not clogged.

Obstructions in the line could cause the sealing organ located on the pump shaft to break.

(The pump leaves the factory with the by-pass closed).

- For self-priming to take place, the screw 3)(Fig. 21) must be loosened in order to bleed off the air contained in the suction line.
- Start the burner by closing the thermostats/pressure switch devices, with switch 1)(Fig. 22) in the "MAN" position and with switch 6)(Fig. 6 on page 13) in the "OIL" position.
- The rotation of the pump motor must be as indicated in Fig. 23.
- The pump can be considered to be primed when the light oil starts coming out of the screw 3)(Fig. 21).
- Stop the burner: switch 1)(Fig. 22) set to "OFF" and tighten the screw 3).

The time required for this operation depends upon the diameter and length of the suction tubing.

If the pump fails to prime at the first starting of the burner and the burner locks out, wait approx. 15 seconds, reset the burner, and then repeat the starting operation as often as required.

After 5 or 6 starting operations allow 2 or 3 minutes for the transformer to cool.

Do not illuminate the UV cell or the burner will lock out; the burner should lock out anyway about 10 seconds after it starts.

WARNING

The a.m. operation is possible because the pump is already full of fuel when it leaves the factory.

If the pump has been drained, fill it with fuel through the opening on the vacuum meter prior to starting; otherwise, the pump will seize.

Whenever the length of the suction piping exceeds 20-30 meters, the supply line must be filled using a separate pump.

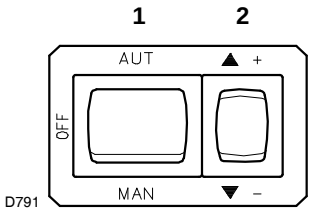

Fig. 22

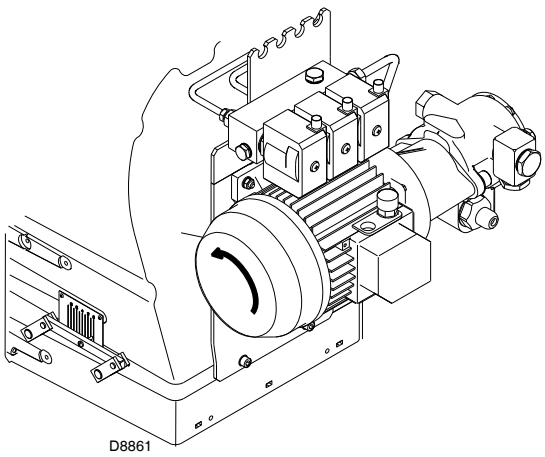

Fig. 23

5.16 Gas feeding line

Explosion danger due to fuel leaks in the presence of a flammable source.

Precautions: avoid knocking, attrition, sparks and heat.

Make sure that the fuel interception tap is closed before performing any operation on the burner.

WARNING

The fuel supply line must be installed by qualified personnel, in compliance with current standards and laws.

Key (Fig. 24)

1 Gas input pipe
2 Manual valve
3 Vibration damping joint
4 Pressure gauge with pushbutton cock
5 Filter
6A Includes:
- Filter
- working valve
- safety valve
- pressure adjuster

6C Includes
- safety valve
- working valve

6D Includes:
- safety valve
- working valve
- pressure adjuster
- filter

7 Minimum gas pressure switch
8 Leak detection device, supplied as an accessory or incorporated, based on the gas train code. In compliance with the EN 676 standard, the leak detection control is compulsory for burners with maximum outputs over 1200 kW.
9 Gasket, for “flanged” versions only
10 Pressure adjuster
11 Train-burner adaptor, supplied separately
P2 Upstream pressure of valves/adjuster
P3 Upstream pressure of the filter
L Gas train supplied separately
L1 The responsibility of the installer

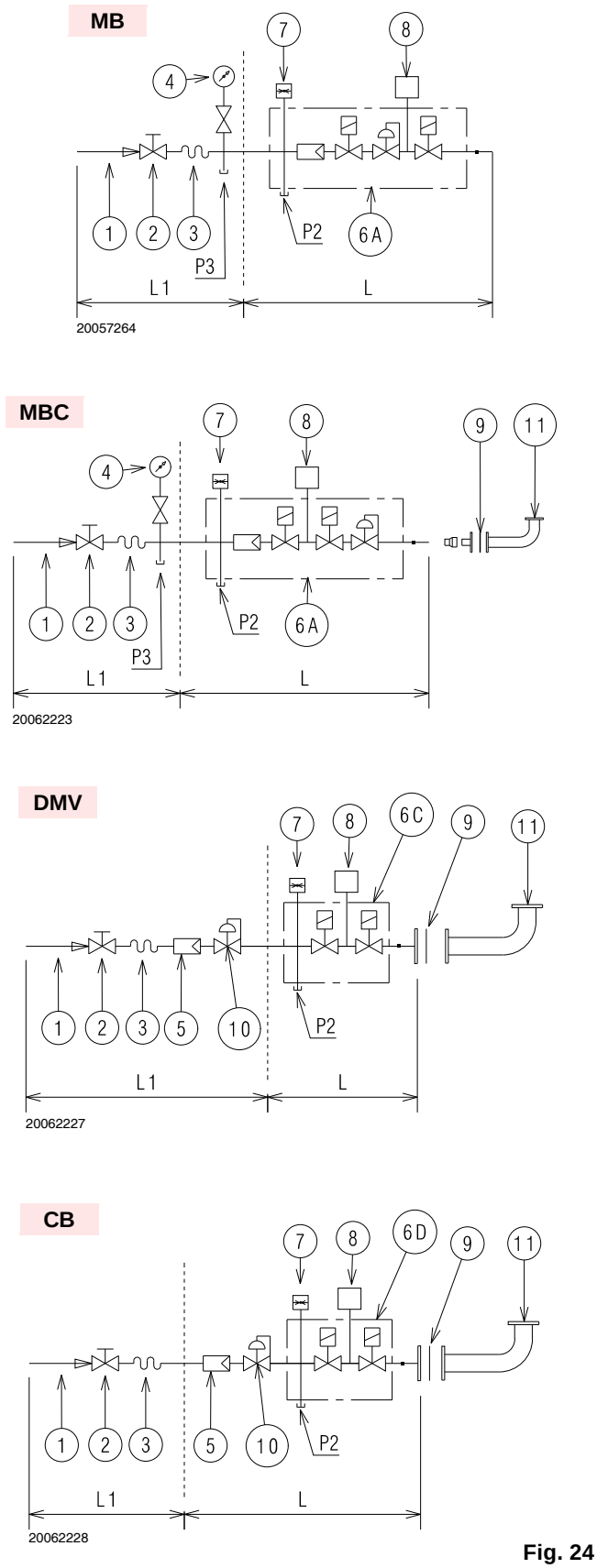

Fig. 24

5.16.1 Gas train

It is type-approved according to EN 676 Standards and is supplied separately from the burner.

To select the correct gas train model, refer to the supplied "Burner-gas train combination" manual.

5.16.2 Gas train installation

DANGER

Disconnect the electrical power using the main system switch.

Check that there are no gas leaks.

Beware of train movements: danger of crushing of limbs.

Make sure that the gas train is properly installed by checking for any fuel leaks.

The operator must use appropriate tools for installation.

The gas train can enter the burner from the right or left side, depending on which is the most convenient.

Gas solenoids must be as close as possible to the burner to ensure gas reaches the combustion head within the safety time range of 3 s.

WARNING

Make sure that the pressure governor calibration range (colour of the spring) comprises the pressure required by the burner.

5.16.3 Gas pressure

The Tab. N shows minimum pressure losses along the gas supply line depending on the maximum burner output operation.

kW	1 Δp (mbar)		2 Δp (mbar)	
	G 20	G 25	G 20	G 25
1230	8,5	1,9	12,7	2,8
1367	10,3	2,7	15,4	4,0
1503	12,2	3,5	18,2	5,2
1640	14,3	4,1	21,3	6,1
1777	16,5	4,6	24,6	6,9
1913	18,7	5,2	27,9	7,8
2050	21,0	5,9	31,3	8,8
2187	23,2	6,9	34,6	10,3
2323	25,5	7,8	38,0	11,6
2460	27,8	8,8	41,5	13,1

Tab. N

Column 1

Pressure loss at combustion head.
Gas pressure measured at test point 1)(Fig. 25), with:
– combustion chamber at 0 mbar;
– combustion head adjusted as indicated in diagram (Fig. 30 at page 27).

Column 2

Pressure loss at gas butterfly valve 2)(Fig. 25) with maximum opening: 90°.

The values shown in the Tab. N refer to:

- natural gas G 20 PCI 9.45 kWh/Sm^3 (8.2 Mcal/Sm^3)
- natural gas G 25 PCI 8.13 kWh/Sm^3 (7.0 Mcal/Sm^3)

Calculate the approximate maximum output of the burner thus:
– subtract the combustion chamber pressure from the gas pressure measured at test point 1)(Fig. 25).
– Find the nearest pressure value to your result in column 1 of the Tab. N.
– Read off the corresponding output on the left.

Example:
- Maximum output operation
- Natural gas G 20 PCI 9.45 kWh/Sm^3
- Gas pressure at test point 1)(Fig. 25) = 24.0 mbar
- Pressure in combustion chamber = 3.0 mbar

24.0 - 3.0 = 21.0 mbar

A maximum output of 2050 kW shown in Tab. N corresponds to 21.0 mbar pressure, column 1.

This value serves as a rough guide, the effective delivery must be measured at the gas meter.

To calculate the required gas pressure at test point 1)(Fig. 25), set the maximim output required from the burner operation:
– Find the nearest output value in the Tab. N.
– Read off the pressure at test point 1)(Fig. 25) on the right in column 1.
– Add this value to the estimated pressure in the combustion chamber.

Example:
- Required burner maximum output operation: 2050 kW
- Natural gas G 20 PCI 9.45 kWh/Sm^3
- Gas pressure at burner output of 2050 kW, column 1 = 21.0 mbar
- Pressure in combustion chamber = 3.0 mbar

21.0 + 3.0 = 24.0 mbar

pressure required at test point 1)(Fig. 25).

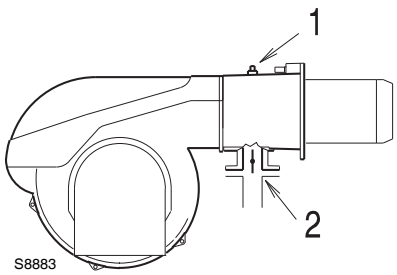

Fig. 25

5.17 Electrical wiring

Notes on safety for the electrical wiring

DANGER

- ➤ The electrical wiring must be carried out with the electrical supply disconnected.
- ➤ Electrical wiring must be carried out by qualified personnel and in compliance with the regulations currently in force in the country of destination. Refer to the wiring diagrams.
- ➤ The manufacturer declines all responsibility for modifications or connections different from those shown in the wiring diagrams.
- ➤ Do not invert the neutral with the phase in the electrical supply line. Any inversion would cause a lockout due to firing failure.
- ➤ Check that the electrical supply of the burner corresponds to that shown on the identification label and in this manual.
- ➤ The burners have been set for intermittent operation. This means they should compulsorily be stopped at least once every 24 hours to enable the control box to perform checks of its own start-up efficiency. Normally the boiler's thermostat/pressure switch ensures the stopping of the burner.
  If this is not the case, it is necessary to apply in series with IN a timer switch that turns off the burner at least once every twenty-four hours. Refer to the wiring diagrams.
- ➤ The electrical safety of the device is obtained only when it is correctly connected to an efficient earthing system, made according to current standards. It is necessary to check this fundamental safety requirement. In the event of doubt, have the electrical system checked by qualified personnel.
- ➤ The electrical system must be suitable for the maximum input power of the device, as indicated on the label and in the manual, checking in particular that the section of the cables is suitable for the input power of the device.
- ➤ For the main power supply of the device from the electricity mains:
  - do not use adapters, multiple sockets or extensions;
  - use an omnipolar switch, as indicated by the current safety standards.
- ➤ Do not touch the device with wet or damp body parts and/or in bare feet.
- ➤ Do not pull the electric cables.

Before carrying out any maintenance, cleaning or checking operations:

DANGER

Disconnect the electrical supply from the burner by means of the main system switch.

DANGER

Close the fuel interception tap.

DANGER

Avoid condensate, ice and water leaks from forming.

If the hood is still present, remove it and proceed with the electrical wiring according to the wiring diagrams.

5.17.1 Electrical connections

WARNING

Electrical wiring must be made in accordance with the regulations currently in force in the country of destination and by qualified personnel.

WARNING

Riello S.p.A. declines all liability for modifications or connections other than those shown on these diagrams.

Use flexible cables according to EN 60 335-1. Regulations:
– if in PVC sheath, use at least H05 VV-F;
– if in rubber sheath, use at least H05 RR-F.

All the wires to connect to the burner terminal strip 8)(Fig. 26) must enter through the supplied fairleads.
The fairleads and hole press-outs can be used in various ways; the following lists show one possible solution:

1 Pg 13.5 Three-phase power supply
2 M20 7 pole socket input
3 M20 4 pole socket input
4 M20 6 pole socket input
5 Optional holes
6 Open the hole, if necessary add a cable gland
7 6 pole socket for gas valves, gas pressure switch or device for VPS control
8 Terminal strip
9 4 pole socket for TR thermostat/pressure switch
10 7 pole socket single-phase power supply for TR thermostat/pressure switch

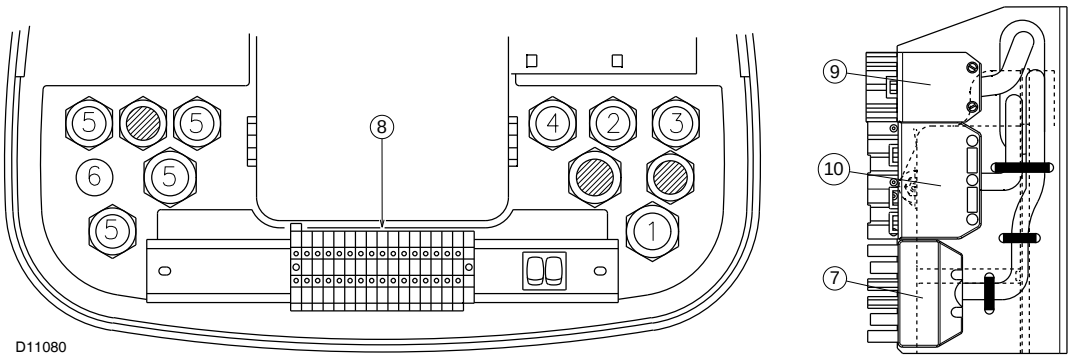

Fig. 26

5.18 Calibration of thermal relay

The thermal relay (Fig. 27) is used to avoid damage to the motor owing to a strong increase in absorption or the lack of a phase.

For the calibration 2), refer to the table given in electrical layout (Electrical connections set by installer).

To reset, in the case of an intervention of the thermal relay, press the button “RESET” 1).

The button “STOP” 3) opens the NC (95-96) contact and stops the motor.

To test the thermal relay, insert a screwdriver in the window “TEST/TRIP” 4) and move it in the sense of the arrow (towards right).

WARNING

Automatic resetting can be dangerous. This action is not provided for the burner operation.

Before carrying out any maintenance, cleaning or checking operations:

DANGER

Disconnect the electricity supply from the burner by means of the main switch of the system.

Close the fuel interception tap.

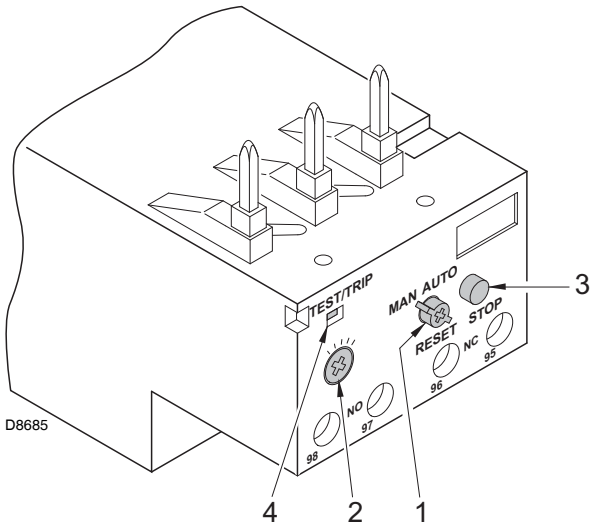

Fig. 27

5.19 Current to the UV photocell

Min. value for a good work: 70 µA.

If the value is lower, it can depend on:

- exhausted photocell
- low current (lower than 187V)
- bad regulation of the burner

In order to measure the current, use a microammeter of 100 µA c.c., connected to the photocell, as in the scheme, with a capacitor of 100 µF - 1V c.c. at the same level of the instrument.
See Fig. 28.

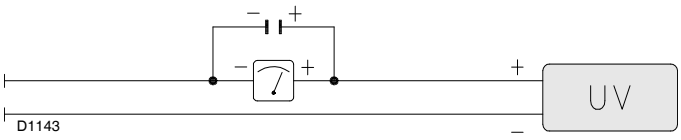

Fig. 28

6 Start-up, calibration and operation of the burner

6.1 Notes on safety for the first start-up

WARNING

The first start-up of the burner must be carried out by qualified personnel, as indicated in this manual and in compliance with the standards and regulations of the laws in force.

WARNING

Check the correct working of the adjustment, command and safety devices.

6.2 Adjustment before first firing (gas oil operation)

6.2.1 Combustion head setting

The setting of the combustion head depends exclusively on the maximum burner output.

Turn screw 5)(Fig. 29) until the notch shown in diagram (Fig. 30) is level with the front surface of flange 6).

WARNING

In order to facilitate adjustment, loosen screw 1)(Fig. 11 at page 17), adjust and then tighten.

Example:
Maximum burner output = 1500 kW.
If diagram (Fig. 30) is consulted it is clear that for this delivery, the combustion head must be adjusted using notch 4, as shown in Fig. 29.

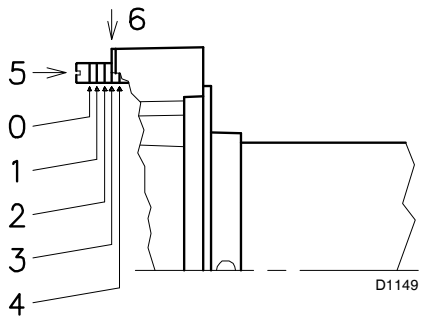

Fig. 29

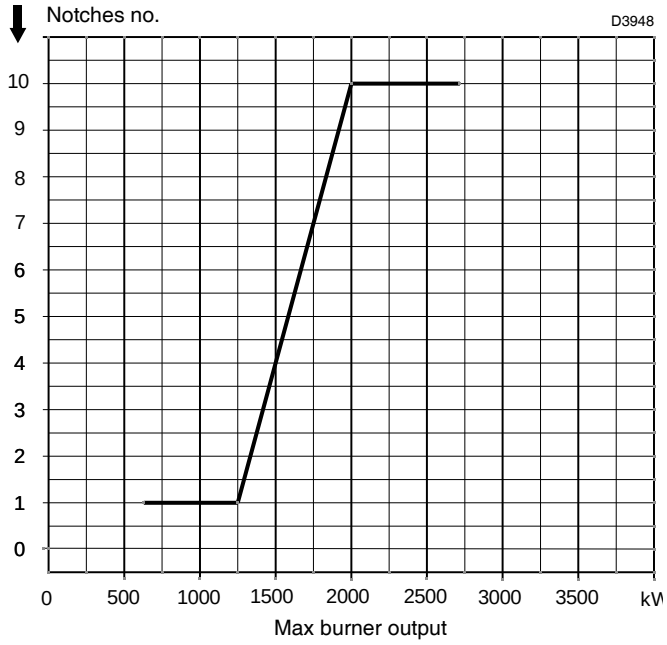

Fig. 30

6.2.2 Pump adjustment

No settings are required for the pump, which is set to 12 bar by the manufacturer. This pressure must be checked and adjusted (if required) after the burner has been ignited.

The only operation required in this phase is the application of a pressure gauge on the appropriate pump attachment.

6.2.3 Fan gate adjustment

The first time the burner is fired leave the factory setting unchanged for both 1st stage and 2nd stage operation.

6.3 Burner calibration (gas oil operation)

WARNING

It is advisable to first set the burner for operating on oil and then for gas.

Execute the fuel exchange when the burner is off.

6.3.1 Firing

Set switch 1)(Fig. 31) to "MAN".

During the first firing, during the passage from the 1st to the 2nd stage, there is a momentary lowering of the fuel pressure caused by the filling of the 2nd stage nozzle tubing.

This lowering of the fuel pressure can cause the burner to lock-out and can sometimes give rise to pulsations.

Once the following adjustments have been made, the firing of the burner must generate a noise similar to the noise generated during operation.

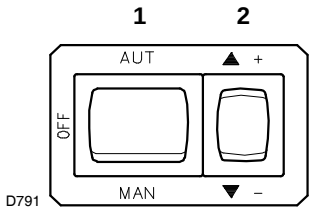

Fig. 31

6.3.2 Operation

The optimum calibration of the burner requires an analysis of the flue gases at the boiler outlet and interventions on the following points.

1st and 2nd stage nozzles

See the information listed on pag. 16.

Combustion head

The adjustment of the combustion head already carried out (pag. 27) need not be altered unless the 2nd stage delivery of the burner is changed.

Pump pressure

12 bar: this is the pressure calibrated in the factory which is usually sufficient for most purposes.
Sometimes, this pressure must be adjusted to:

10 bar: in order to reduce fuel delivery.
This adjustment is possible only if the surrounding temperature remains above 0°C.

14 bar: in order to increase fuel delivery or to ensure firings even at temperatures of less than 0°C. In order to adjust pump pressure, use the screw 5)(Fig. 21 at page 21).

1st and 2nd stage fan air gate valve

See adjustments of servomotor at pag. 18.

6.4 Adjustment before first firing (gas operation)

Adjustment of the combustion head has been illustrated on pag. 27.

In addition, the following adjustments must also be made:

- ➤ open manual valves up-line from the gas train.
- ➤ Adjust the minimum gas pressure switch to the start of the scale (Fig. 32).
- ➤ Adjust the maximum gas pressure switch to the start of the scale (Fig. 33).
- ➤ Adjust the air pressure switch to the zero position of the scale (Fig. 34).
- ➤ Purge the air from the gas line.
  Continue to purge the air (we recommend using a plastic tube routed outside the building) until gas is smelt.
- ➤ Fit a U-type manometer (Fig. 35) to the gas pressure test point on the sleeve. The manometer readings are used to calculate the MAX. burner power using the Tab. N at page 24.
- ➤ Connect two lamps or testers to the two gas line solenoid valves VR and VS to check the exact moment at which voltage is supplied.
  This operation is unnecessary if each of the two solenoid valves is equipped with a pilot light that signals voltage passing through.

Before starting up the burner it is good practice to adjust the gas train so that ignition takes place in conditions of maximum safety, i.e. with gas delivery at the minimum.

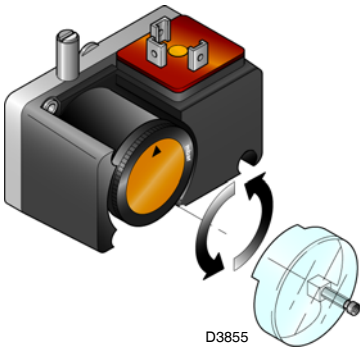

Fig. 32

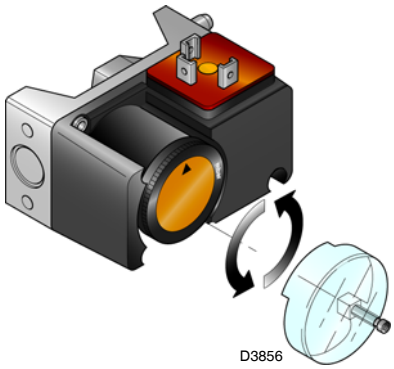

Fig. 33

Fig. 34

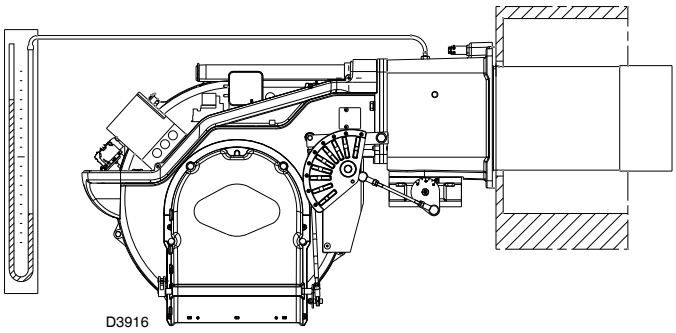

Fig. 35

6.5 Burner starting (gas operation)

WARNING

It is advisable to first set the burner for operating on oil and then for gas.

Execute the fuel exchange when the burner is off.

Close the control devices and set switch 1)(Fig. 36) to “MAN”.

As soon as the burner starts check the direction of rotation of the fan blade, looking through the flame inspection window 26)(Fig. 6 at page 13).

Make sure that the lamps or testers connected to the solenoids, or pilot lights on the solenoids themselves, indicate that no voltage is present. If voltage is present, then **immediately** stop the burner and check electrical connections.

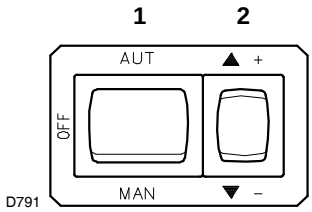

Fig. 36

6.6 Burner firing (gas operation)

Having completed the checks indicated in the previous heading, the burner should fire. If the motor starts but the flame does not appear and the control box goes into lock-out, reset and wait for a new firing attempt.

If firing is still not achieved, it may be that gas is not reaching the combustion head within the safety time period of 3 seconds. In this case increase gas firing delivery.

The arrival of gas at the sleeve is indicated by the U-type manometer (Fig. 35).

Once the burner has fired, now proceed with global calibration operations.

6.7 Burner calibration (gas operation)

The optimum calibration of the burner requires an analysis of the flue gases at the boiler outlet.

Adjust successively
- Firing output
- MAX burner output
- MIN burner output
- Intermediate outputs
- Air pressure switch
- Maximum gas pressure switch
- Minimum gas pressure switch

6.7.1 Firing output

According to EN 676 Regulations:

Burners with MAX output up to 120 kW

Firing can be performed at the maximum operation output level. Example:
- max. operation output : 120 kW
- max. firing output : 120 kW

Burners with MAX output above 120 kW

Firing must be performed at a lower output than the max. operation output. If the firing output does not exceed 120 kW, no calculations are required. If firing output exceeds 120 kW, the regulations prescribe that the value be defined according to the control box safety time “ts”:
- for ts = 2s, firing output must be equal to or lower than 1/2 of max. operation output;
- for ts = 3s, firing output must be equal to or lower than 1/3 of max. operation output.

Example:
MAX operation output of 600 kW.
Firing output must be equal to or lower than:
- 300 kW con ts = 2s
- 200 kW con ts = 3s

In order to measure the firing output:
➤ remove the UV cell 17)(Fig. 6 at page 13) (the burner will fire and then go into lock-out after the safety time has elapsed).
➤ Perform 10 firings with consecutive lock-outs.
➤ On the meter read the quantity of gas burned. This quantity must be equal to or lower than the quantity given by the formula:

$$\frac{\textbf{Sm}^3\textbf{/h}\ \text{(max. burner delivery)}}{\textbf{360}}$$

Example for G 20 (9.45 kWh/Nm^3):
max. operation output: 600 kW corresponding to 60 Sm^3/h.
After 10 firings with lock-outs, the delivery read on the meter must be equal to or lower than: 60 : 360 = 0.166 Sm^3.

6.7.2 MAX burner output

Max. output of the burner must be set within the firing rate range shown on pag. 11.

In the above instructions we left the burner running in MIN. output operation. Now press button 2)(Fig. 36) “increase output” and keep it pressed until the servomotor has opened the air gate valve and the gas butterfly valve.

Gas calibration

Measure the gas delivery at the meter.

A guideline indication can be calculated from the Tab. N at page 24, simply read off the gas pressure on the U-type manometer, see Fig. 35 at page 28, and follow the instructions on pag. 24.
- If delivery needs to be reduced, diminish outlet gas pressure and, if it is already very low, slightly close adjustment valve VR.
- If delivery needs to be increased, increase outlet gas pressure.

Adjusting air delivery

Progressively adjust the end profile of cam 4)(Fig. 37) by turning the screws 7).
- Turn the screws clockwise to increase air delivery.
- Turn the screws counter-clockwise to reduce air delivery.

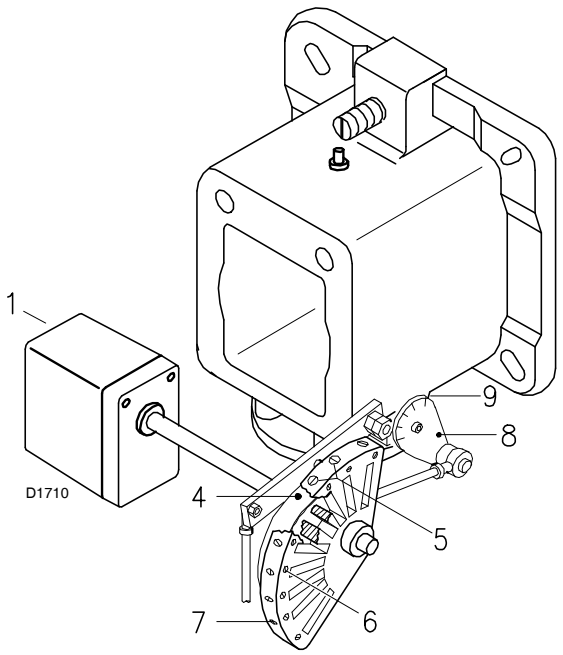

Fig. 37

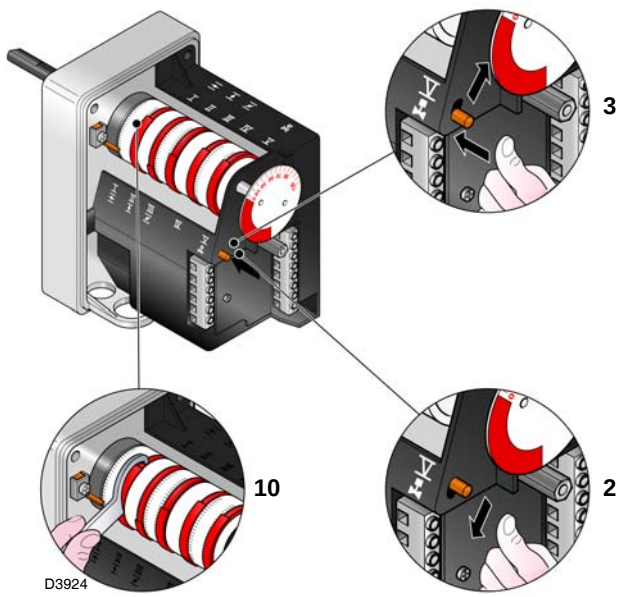

Fig. 38

Key Fig. 37
1 Servomotor
2 Servomotor 1) - Cam 4): engaged
3 Servomotor 1) - Cam 4): disengaged
4 Adjustable profile cam
5 Cam starting profile adjustment screws
6 Adjustment fixing screws
7 Cam end profile adjustment screws
8 Graduated sector for gas butterfly valve
9 Index for graduated sector 8
10 Key for cam III adjustment

6.7.3 MIN burner output

Min output must be selected within the firing rate range shown on pag. 11.

Press button 2)(Fig. 36 at page 29) “output reduction” until the servomotor has closed the air gate valve and the gas butterflu valve to 30° (factory set adjustment).

Adjusting gas delivery

Measure the delivery of gas from the gas meter.

– If this value is to be reduced, decrease the angle of cam III (Fig. 38) slightly by proceeding a little at a time until the angle is changed from 30° to 28° - 26°....
– If it has to be increased press the button “output increase” 2)(Fig. 36 at page 29) (i.e. open the gas butterfly valve by 10-15°), increase the cam III angle (Fig. 38) with small successive movements, i.e. take it from angle 30° to 32° - 34°....
  Then press the button “output decrease” until the servomotor is taken to the minimum opening position and measure the gas delivery.

WARNING

The servomotor follows the adjustment of cam III only when the cam angle is reduced. If it is necessary to increase the cam angle, first increase the servomotor angle with the key “output increase”, then increase the cam III angle, and finally bring the servomotor back to the MIN output position with the key ”output decrease”.

In order to adjust cam III, especially for fine movements, the key 10)(Fig. 38), held by a magnet under the servomotor, can be used.

Adjustment of air delivery

Progressively adjust the starting profile of cam 4)(Fig. 37) by turning the screws 5).

It is preferable not to turn the first screw since this is used to set the air gate valve to its fully-closed position.

6.7.4 Intermediate outputs

Adjustment of gas delivery

No adjustment of gas delivery is required.

Adjustment of air delivery

Press the key 2)(Fig. 36 at page 29) “output increase” a little so that the servomotor turns by about 15°.

Adjust the screws until optimal combustion is obtained. Proceed in the same way with the other screws.

WARNING

Take care that the cam profile variation is progressive.

➤ Switch off the burner using switch 1)(Fig. 36 at page 29), at OFF position;
➤ disengage the cam 4)(Fig. 37) from the servomotor, by pressing the button 3)(Fig. 38) and moving it to the right, and check more than once that the movement is soft and smooth, and does not grip, by rotating the cam 4) forward and backward by hand.
➤ Engage the cam 4) to the servomotor again by moving the button 2)(Fig. 38) to the left.

WARNING

As far as is possible, try not to move those screws at the ends of the cam that were previously adjusted for the opening of the air gate to MAX and MIN output.

➤ Finally fix the adjustment by turning the screws 6)(Fig. 37).

NOTE:

Once you have finished adjusting outputs MAX - MIN - INTERMEDIATE, check ignition once again: noise emission at this stage must be identical to the following stage of operation.

If you notice any sign of pulsations, reduce the ignition stage delivery.

6.8 Pressure switch adjustment

6.8.1 Air pressure switch

Adjust the air pressure switch after having performed all other burner adjustments with the air pressure switch set to the start of the scale (Fig. 39).

With the burner working at MIN output, insert a combustion analyser in the stack, slowly close the suction inlet of the fan (for example, with cardboard) until the CO value does not exceed 100 ppm.

Then slowly turn the appropriate knob clockwise until the burner reaches the lockout position.

Check the indication of the arrow pointing upwards on the graduated scale (Fig. 39).

Turn the knob clockwise again, until the value shown on the graduated scale corresponds with the arrow pointing downwards, and so recovering the hysteresis of the pressure switch (shown by the white mark on a blue background, between the two arrows).

Now check the correct start-up of the burner.

If the burner locks out again, turn the knob anticlockwise a little bit more.

The incorporated air pressure switch can work in a “differential” mode if connected with two pipes. If a negative pressure in the combustion chamber during pre-purging prevents the air pressure switch from switching. Switching may be obtained by fitting a second pipe between the air pressure switch and the suction inlet of the fan. In such a manner the air pressure switch operates as differential pressure switch.

WARNING

The use of the air pressure switch with differential operation is allowed only in industrial applications and in places where national rules enable the air pressure switch to control only fan operation.

6.8.2 Maximum gas pressure switch

Adjust the maximum gas pressure switch after having performed all the other burner adjustments with the maximum gas pressure switch set at the end of the scale (Fig. 40).

With the burner operating at MAX output, reduce the adjustment pressure by slowly turning the relative knob anticlockwise until the burner locks out.

Then turn the knob clockwise by 2 mbar and repeat burner firing.

If the burner locks out again, turn the knob again clockwise by 1 mbar.

6.8.3 Minimum gas pressure switch

Adjust the minimum gas pressure switch after having performed all the other burner adjustments with the pressure switch set at the start of the scale (Fig. 41).

With the burner operating at MAX output, increase adjustment pressure by slowly turning the relative knob clockwise until the burner locks out.

Then turn the knob anti-clockwise by 2 mbar and repeat burner starting to ensure it is uniform.

If the burner locks out again, turn the knob anti-clockwise again by 1 mbar.

Fig. 39

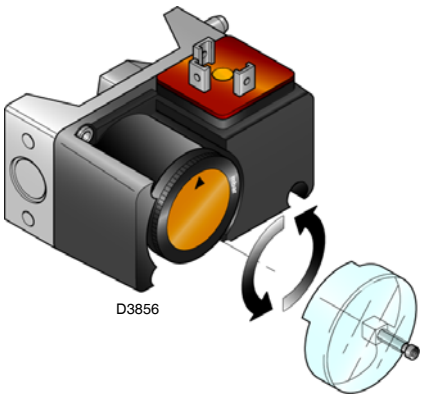

Fig. 40

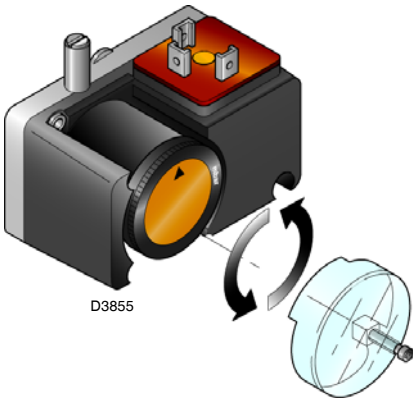

Fig. 41

6.9 Combustion checks

CO_2

It is better to set the burner with CO_2 not higer than 10% (gas with Pci 8,600 kcal/m^3).
In this way avoiding a loss of calibration setting (for example draft variation) that could cause combustion with little air and the production of CO.

CO

It must be not higher than 100 mg/kWh.

6.10 Burner operation

6.10.1 Burner starting

0s: TL closes. Fan motor starts (Fig. 42)

6s: Servomotor starts: 130° rotation to right, until contact is made on cam I (Fig. 16 at page 18).
The air gate valve is positioned to MAX. output.

48s: Pre-purge stage with air delivery at MAX. output.
Duration 32 seconds.

80s: Servomotor rotates to left up to the angle set on cam cam III (Fig. 16 at page 18) for MIN. output.

112s: The air gate valve and the gas butterfly are positioned to MIN. output (with cam III)(Fig. 16 at page 18) at 30°).

113s: Ignition electrode strikes a spark.

119s: Safety valve VS and adjustment valve VR (rapid opening) open. The flame is ignited at a low output level, point A (Fig. 42).
Output is then progressively increased, with the valve VR opening slowly up to MIN. output, point B (Fig. 42).

122s: The spark goes out.

135s: The control box starting cycle ends.

NORMAL FIRING
(n° = seconds from instant 0)

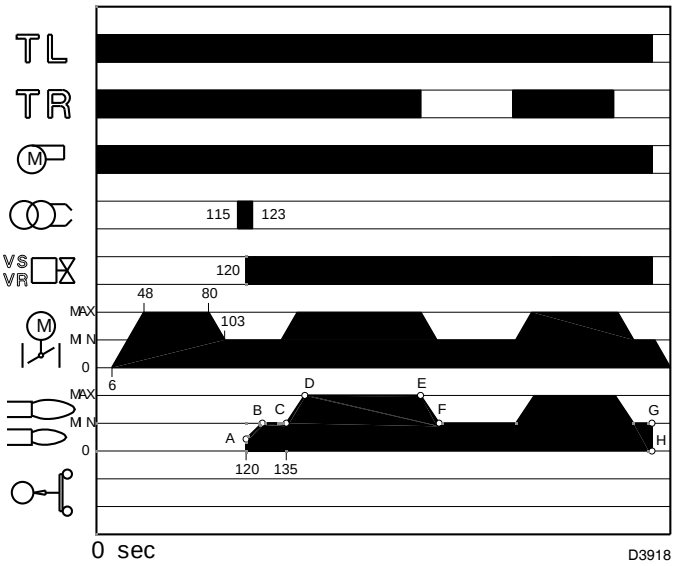

Fig. 42

6.10.2 Steady state operation

Burner without modulating operation kit

Once the starting cycle has come to an end, control of the servomotor passes on to the TR that controls boiler temperature or pressure, point C (Fig. 42).

(The control box will continue, however, to monitor flame presence and the correct position of the air and gas max. pressure switches).

- ➤ If the temperature or pressure is low (and the TR load control is consequently closed), the burner progressively increases its output to the MAX. value, section C-D (Fig. 42).
- ➤ If subsequently the temperature or pressure increases until TR opens, the burner progressively decreases its output to the MIN. value (section E-F) (Fig. 42).
  And so on.
- ➤ The burner locks out when the demand for heat is less than the heat supplied by the burner in min. output, section G-H (Fig. 42).
  Load control TL opens.
  The servomotor returns to the 0° angle limited by contact with cam II (Fig. 16 at page 18).
  The air gate valve closes completely to reduce thermal dispersion to a minimum.

Every time output is changed, the servomotor automatically modifies gas delivery (gas butterfly valve) and air delivery (fan gate valve).

Burner with modulating operation kit

See the handbook enclosed with the regulator.

NO FIRING

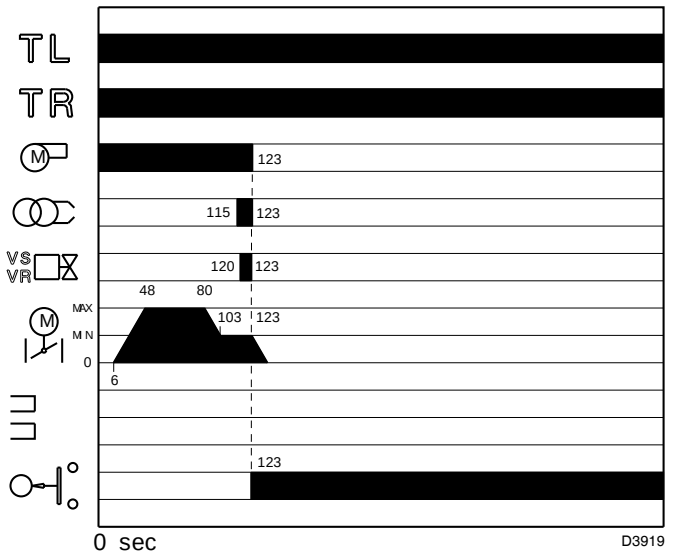

Fig. 43

6.10.3 Firing failure

If the burner does not fire, it goes into lock-out within 3 s of the opening of the gas solenoid valve and 122 s after the closing of control device TL (Fig. 43).

6.10.4 Burner flame goes out during operation

If the flame should accidentally go out during operation, the burner will lock out within 1s.

7 Maintenance

7.1 Notes on safety for the maintenance

The periodic maintenance is essential for the good operation, safety, yield and duration of the burner.

It allows you to reduce consumption and polluting emissions and to keep the product in a reliable state over time.

DANGER

The maintenance interventions and the calibration of the burner must only be carried out by qualified, authorised personnel, in accordance with the contents of this manual and in compliance with the standards and regulations of current laws.

Before carrying out any maintenance, cleaning or checking operations:

DANGER

Disconnect the electrical supply from the burner by means of the main system switch.

DANGER

Close the fuel interception tap.

Wait for the components in contact with heat sources to cool down completely.

7.2 Maintenance programme

7.2.1 Maintenance frequency

The combustion system should be checked at least once a year by a representative of the manufacturer or another specialised technician.

7.2.2 Checking and cleaning

Combustion

The optimum calibration of the burner requires an analysis of the flue gases.
Significant differences with respect to the previous measurements indicate the points where more care should be exercised during maintenance.

Combustion head

Open the burner and make sure that all components of the combustion head are in good condition, not deformed by the high temperatures, free of impurities from the surroundings and correctly positioned. If in doubt, extract the internal part 5)(Fig. 45).

UV cell

Clean the glass cover from any dust that may have accumulated. The UV cell 17)(Fig. 6 at page 13) is held in position by a pressure fit and can therefore be removed by pulling it outward forcefully.

Fan

Check to make sure that no dust has accumulated inside the fan or on its blades, as this condition will cause a reduction in the air flow rate and provoke polluting combustion.

Burner

Check for excess wear or loose screws in the mechanisms controlling the air gate valve and the gas butterfly valve. Also make sure that the screws securing the electrical leads in the burner terminal strip are fully tightened.

Clean the outside of the burner, taking special care with the transmission joints and cam 4)(Fig. 37 at page 30).

Boiler

Clean the boiler as indicated in its accompanying instructions in order to maintain all the original combustion characteristics intact, especially the flue gas temperature and combustion chamber pressure.

Flame inspection window

Clean the flame inspection window (Fig. 44).

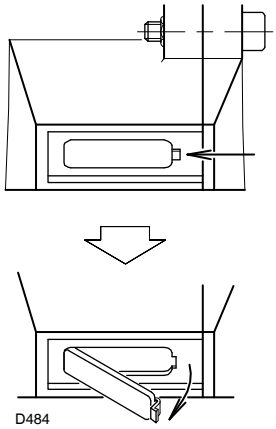

Fig. 44

Servomotor

Disengage the cam 4)(Fig. 37 at page 30) from the servomotor, by pressing and moving button 3)(Fig. 38 at page 30) towards the right, and turn it backwards and forwards by hand to make sure it moves freely.
Now engage the cam again by moving the button 2)(Fig. 38 at page 30) to the left.

GAS OIL OPERATION

Filters

Check the filtering baskets on line and at nozzle present in the system. Clean or replace if necessary.
If rust or other impurities are observed inside the pump, use a separate pump to lift any water and other impurities that may have deposited on the bottom of the tank.

Pump

The delivery pressure must be stable. The depression must be less than 0.4 bar. Unusual noise must not be evident during pump operation.

If the pressure is found to be unstable or if the pump runs noisily, the flexible hose must be detached from the line filter and the fuel must be sucked from a tank located near the burner. This measure permits the cause of the anomaly to be traced to either the suction piping or the pump.

If the pump is found to be responsible, check to make sure that the filter is not dirty. The vacuometer is installed upstream from the filter and consequently will not indicate whether the filter is clogged or not. Contrarily, if the problem lies in the suction line, check to make sure that the filter is clean and that air is not entering the piping.
Please check that the supply line and filters are clear. The use of a pump vacuum gauge will assist in this. This measure permits the cause of the anomaly to be traced to either the suction line or the pump.
If the problem lies in the suction line, check to make sure that the filter is clean and that air is not entering the piping.

Hoses

- ➤ Check periodically the flexible pipes conditions. They have to be replaced at least **every 2 years**.
- ➤ In case of use of gas oil and bio fuel blends, it is strongly recommended to inspect **even more frequently** the hoses and replace them where contamination has occurred.
- ➤ Check to make sure that the hoses are still in good condition.

Nozzles

Do not clean the nozzle openings; do not even open them.
The nozzle filters however may be cleaned or replaced as required.
It is advisable to replace nozzles every year during regular maintenance operations.
Combustion must be checked after the nozzles have been changed.

Fuel tank

If water or contamination is present within the fuel tank, it is essential that this is removed before the equipment is to be used. This is extremely important when gas oil containing Bio diesel is in use. If in doubt about how to achieve this then please contact the fuel or oil tank supplier.

Combustion

In case the combustion values found at the beginning of the intervention do not respect the standards in force or, in any case, do not correspond to a proper combustion, contact the Technical Assistant and have him carry out the necessary adjustments.

EN 267	Excess air		
	Max output $\lambda \leq 1.2$		Min output $\lambda \leq 1.3$
Theoretical max. CO_2 0 % O_2	Calibration CO_2 %		CO mg/kWh
	$\lambda = 1,2$	$\lambda = 1,3$	
15.2	12.6	11.5	≤ 100

Tab. O

GAS OPERATION

Gas leaks

Make sure that there are no gas leaks on the pipework between the gas meter and the burner.

Gas filter

Change the gas filter when it is dirty.

Combustion

In case the combustion values found at the beginning of the intervention do not respect the standards in force or, in any case, do not correspond to a proper combustion, contact the Technical Assistant and have him carry out the necessary adjustments.

EN 676		Excess air		
		Max output $\lambda \leq 1,2$		Min output $\lambda \leq 1,3$
GAS	Theoretical max. CO_2 0 % O_2	Calibration CO_2 %		CO mg/kWh
		$\lambda = 1,2$	$\lambda = 1,3$	
G 20	11.7	9.7	9.0	≤ 100
G 25	11.5	9.5	8.8	≤ 100
G 30	14.0	11.6	10.7	≤ 100
G 31	13.7	11.4	10.5	≤ 100

Tab. P

7.3 Opening the burner

DANGER

Disconnect the electrical supply from the burner by means of the main system switch.

DANGER

Close the fuel interception tap.

Wait for the components in contact with heat sources to cool down completely.

- ➤ Loosen screws 1)(Fig. 45) and withdraw the cover 2).
- ➤ Disconnect the light-oil pipes 7).
- ➤ Disengage the articulated coupling 8) from the graduated sector 9).
- ➤ Remove the screws 10) from the two slide bars 4).
- ➤ Fit the two extensions onto the slide bars 4).
- ➤ Replace the screws 10) onto the two slide bars.
- ➤ Remove screws 3) and pull the burner back by about 100 mm on the slide bars.
- ➤ Disconnect the electrode leads and then pull the burner fully back.
- ➤ Now extract the internal part 5) after having removed the screw 6).

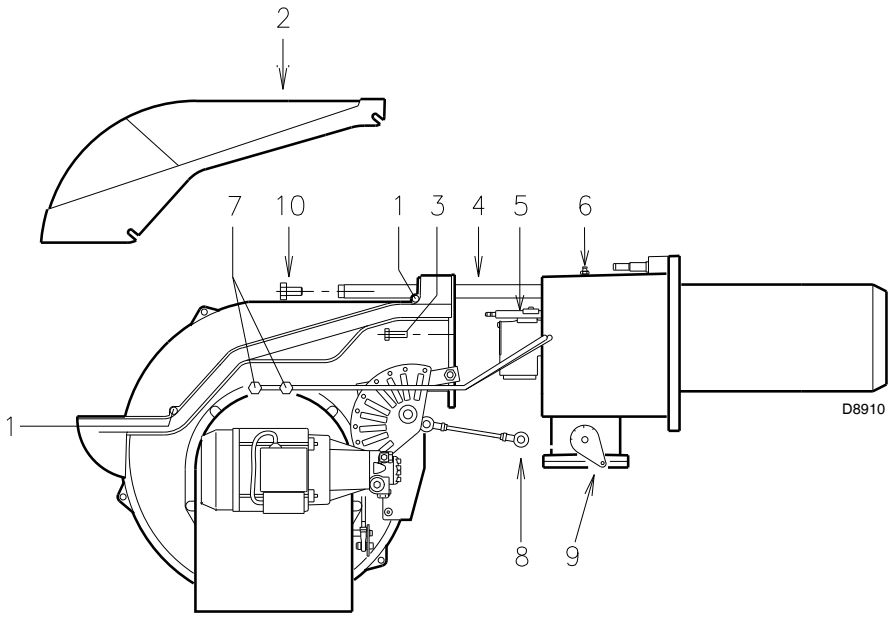

Fig. 45

7.4 Closing the burner

- ➤ Push the burner until it is about 100 mm from the sleeve.
- ➤ Re-connect the leads and slide in the burner until it comes to a stop.
- ➤ Refit screws 3), and pull the probe and electrode leads gently out until they are slightly stretched.
- ➤ Re-couple the articulated coupling 8) to the graduated sector 9).
- ➤ Reconnect the light-oil pipes 7).
- ➤ Remove the two extensions from the slide bars 4) and return them to their original position.

After carrying out maintenance, cleaning or checking operations, reassemble the hood and all the safety and protection devices of the burner.

8 Faults - Possible causes - Solutions

Find a list of faults, causes and possible solutions for a set of failures that may occur and result in irregular burner operation or no functioning at all.

If a burner malfunction is detected, first of all:

- check that the electrical wiring is adequately connected;
- check whether fuel is delivered;
- check that every adjustment parameter is adequately set.

WARNING

In the event of a burner lockout, more than two consecutive burner reset operations could cause damage to the installation. On the third lockout, contact the Aftersales Service.

DANGER

If further lockouts or burner faults occur, interventions must only be made by qualified, authorised personnel (as indicated in this manual, and in compliance with the laws and regulations currently in force).

GAS OIL OPERATION			
SYMBOL (1)	FAULT	PROBABLE CAUSE	SUGGESTED REMEDY
◀	The burner does not start	A limit or safety control device is open	Adjust or replace
		Control box lock-out	Reset
		Fan motor blocked	Reset thermal cut-out
		Oil pressure switch intervenes	Adjust pressure switch or eliminate overpressure
		No electrical power supply	Close all switches - Check connections
		No gas oil	Check the gas oil supply circuit
		Control box fuse blown	Replace
		Pump is jammed	Replace
		Defective motor command control device	Replace
		Defective control box	Replace
		Defective electrical motor	Replace
		The pilot burner does not work	Check
		Defective safety solenoid valve	Replace
		Defective oil modulator	Recondition or replace
	The burner does not start and a function lock-out occurs	Flame simulation	Replace control box
		Photocell short-circuit	Replace photocell
		2-phase power supply thermal relay trips	Reset thermal cut-out when third phase is re-connected
▲	The burner starts but stops at maximum air damper setting	Contact 1 of servomotor does not operate control box terminals 9-8	Adjust cam I or replace servo-motor
P	The burner starts and then goes into lock-out	Air pressure switch adjusted badly	Adjust
		Pressure switch pressure point pipe blocked	Clean
■	The burner starts and then goes into lock-out	Fault in flame detection circuit	Replace control box
▼	The burner remains in pre-purging phase	Contact III of servomotor does not operate control box terminals 10-8	Adjust cam III or replace servo-motor

GAS OIL OPERATION			
SYMBOL (1)	FAULT	PROBABLE CAUSE	SUGGESTED REMEDY
1	After pre-purge and the safety time, the burner goes to lock-out and the flame does not appear	The solenoid VP1 allows little gas through	Increase
		Solenoid valves VP1 or VP2 fail to open	Renew the coil or rectifier panel
		No fuel in tank; water on tank bottom	Top up fuel level or suck up water
		Inappropriate head and air gate valve adjustments	Adjust
		High voltage cable defective or grounded	Replace
		High voltage cable deformed by high temperature	Replace and protect
		Erroneous valves or transformer electrical connections	Check
		Pump unprimed	Prime
		Pump suction line connected to return line	Correct connection
		Filters dirty (on line 1 at the nozzle)	Clean
		Valves up-line from pump closed	Open
		Incorrect motor rotation direction	Change motor electrical connections
		Gas oil solenoid valves fail to open	Check the connections and the solenoid valves
		Nozzle clogged, dirty, or deformed	Clean or replace
		The pilot burner does not work	Check
1		Defective control box	Replace
		Ignition electrode wrongly adjusted	Adjust
		Grounded electrode due to broken insulation	Replace
		Pump/motor coupling broken	Replace
		Ignition transformer defective	Replace
	The flame ignites normally but the burner locks out when the safety time has elapsed	Defective photocell or control box	Replace photocell or control box
		Dirty photocell	Clean
	Smoke in flame - dark Bacharach	Not enough air	Adjust head and fan gate
		Erroneous pump pressure	Adjust
		Nozzle filter clogged	Clean or replace
		Boiler room air vents insufficient	Increase
		Nozzle worn or dirty	Replace
		Flame disk dirty, loose, or deformed	Clean, tighten in place, or replace
	Smoke in flame (yellow Bacharach)	Too much air	Adjust head and air gate
	Firing with pulsations or flame detachment, delayed firing	Poorly adjusted head	Adjust
		Poorly adjusted fan air gate: too much air	Adjust
		Nozzle unsuited for burner or boiler	See Nozzle Table
		Defective nozzle	Replace
		Inappropriate pump pressure	Adjust
		Poorly adjusted or dirty firing electrodes	Adjust
		Output during ionisation phase is too high	Reduce
	The burner does not pass to 2nd stage	Control device TR does not close	Adjust or replace
		Defective control box	Replace
	Uneven fuel supply	Check if cause is in pump or in the fuel supply system	Feed the burner from a tank located nearby
	Rusty pump internal parts	Water in tank	Suck water from tank bottom with separate pump
	Noisy pump, unstable pressure	Air has entered the suction line	Tighten connectors
		Depression value too high (higher than 35 cm Hg):	
		Tank/burner height difference too great	Feed burner with loop circuit
		Piping diameter too small	Increase
		Suction filters clogged	Clean
		Suction valves closed	Open
		Paraffin solidified due to low temperature	Add additive to gas oil

GAS OIL OPERATION			
SYMBOL (1)	**FAULT**	**PROBABLE CAUSE**	**SUGGESTED REMEDY**
	Pump unprimes after prolonged pause	Return pipe not immersed in fuel	Bring to same height as suction pipe
		Air enters suction piping	Tighten connectors
	Pump leaks gas oil	Leakage from sealing organ	Replace pump
	Dirty combustion head	Nozzle or filter dirty	Replace
		Unsuitable nozzle delivery or angle	See recommended nozzles
		Loose nozzle	Tighten
		Impurities on flame stability disk	Clean
		Erroneous head adjustment or not enough air	Adjust, open air damper
		Blast tube length unsuited to boiler	Contact boiler manufacturer
I	During operation, the burner stops in lock out	Dirty or defective photocell	Clean or replace
		Defective air pressure switch	Replace

(1) The control box is fitted with a disc rotates during the firing programme, which can been seen through the transparent lock-out reset button.
When the burner does not fire or comes to a half following a fault, the symbol which appears behind the reset button indicates the type of problem.

GAS OPERATION			
SYMBOL (1)	FAULT	PROBABLE CAUSE	SUGGESTED REMEDY
◀	The burner does not start	No electrical power supply	Close all switches and check connections
		A limiter or safety control device is open	Adjust or replace
		Control box lock-out	Reset control box
		Control box fuse blown	Replace (2)
		Erroneous electrical connections	Check
		Defective control box	Replace
		No gas supply	Open the manual valves between meter and train
		Mains gas pressure insufficient	Contact your GAS COMPANY
		Minimum gas pressure switch fails to close	Adjust or replace
		Air pressure switch in operating position	Adjust or replace
		Contact (locking cam) of servomotor does not operate	Adjust locking cam or replace servomotor
	The burner does not start and a function lock-out occurs	Flame simulation	Replace control box
		Defective motor command control device	Replace
		Defective electrical motor	Replace
		Motor protection tripped	Reset thermal cut-out
▲	The burner starts but stops at maximum air damper setting	Contact of servomotor does not operate (Cam-max. opening)	Adjust cam (max.) or replace servomotor
P	The burner starts and then goes into lock-out	Air pressure switch inoperative due to insufficient air pressure:	
		Air pressure switch adjusted badly	Adjust or replace
		Pressure switch pressure point pipe blocked	Clean
		Poorly adjusted head	Adjust
		Dirty fan	Clean
		High negative draft in chamber	Ask our technical office
■	The burner starts and then goes into lock-out	Fault in flame detection circuit	Replace control box
▼	The burner remains in pre-purging phase	Contact servomotor does not operate (Minimum cam)	Adjust cam (minimum) or replace servomotor
1	After pre-purge and the safety time, the burner goes to lock-out and the flame does not appear	The solenoid VP1 allows little gas through	Increase
		Solenoid valves VP1 or VP2 fail to open	Renew the coil or rectifier panel
		Gas pressure too low	Increase pressure at governor
		Ignition electrode wrongly adjusted	Adjust
		Grounded electrode due to broken insulation	Replace
		High voltage cable defective or grounded	Replace
		High voltage cable deformed by high temperature	Replace and protect
		Ignition transformer defective	Replace
		Erroneous valves or transformer electrical connections	Repeat connection
		Defective control box	Replace
		A cock down-line of the gas train is closed	Open
		Air in pipework	Bleed air
	The burner goes to lock-out right after flame appearance	The solenoid VP1 or VP2 allows little gas through	Increase
		Dirty flame sensor	Check, replace flame sensor
		Defective connection	Check, replace flame sensor
		Insufficient defection current (min.70 μA)	Measure current, replace flame sensor
		Exhausted, defective flame sensor	Replace
		Max. gas pressure switch operates	Adjust or replace
		Defective control box	Replace

GAS OPERATION			
SYMBOL (1)	**FAULT**	**PROBABLE CAUSE**	**SUGGESTED REMEDY**
	The burner repeats the starting cycle without lock out	Mains gas pressure is near the valve to which the min. gas pressure switch gas is adjusted. The repeated drop in pressure which follows valve opening causes temporary opening of the pressure switch itself, the valve immediately closes and the burner comes to a halt. Pressure increases again, the pressure switch closes again and the firing cycle is repeated. And so on.	Reduce operating pressure of minimum gas pressure switch. Replace gas filter
	Lock out without symbol indication	Flame simulation	Replace control box
I	During operation, the burner stops in lock out	Defective flame sensor	Replace worn parts
		Fault on air pressure switch	Replace
		Max. gas pressure switch operates	Adjust or replace
◀	Lock out when burner stops	Flame remains in combustion head or flame simulation	Eliminate persistence of flame or replace control box
	Ignition with pulsation	Poorly adjusted head	Adjust
		Ignition electrode wrongly adjusted	Adjust
		Poorly adjusted fan air gate: too much air	Adjust
		Output during ionisation phase is too high	Reduce

(1) The control box is fitted with a disc rotates during the firing programme, which can been seen through the transparent lock-out reset button.
When the burner does not fire or comes to a half following a fault, the symbol which appears behind the reset button indicates the type of problem.

(2) The fuse is located in the rear part of the control box. A pull-out fuse is also available as a spare part which can be fitted after breaking the tag on the panel which holds in place.

A Appendix - Accessories (optional)

OUTPUT POWER REGULATOR KIT RWF 40

With the modulating operation, the burner continually adapts the power to the request for heat, ensuring great stability for the parameter controlled: temperature or pressure.

Two components should be ordered:
- the output regulator to install on the burner
- the probe to install on the heat generator

Parameter to control		Probe		Output power regulator	
	Range	Type	Code	Type	Code
Temperature	- 100...+ 500°C	PT 100	3010110	RWF40	3010414
Pressure	0...2.5 bar 0...16 bar	Probe with output 4...20 μA	3010213 3010214		

OUTPUT POWER REGULATOR WITH SIGNAL 4-20 mA, 0-10V

Two components should be ordered:
- the Analogic signal converter
- the Potentiometer

Potentiometer		Analogic signal converter	
Type	Code	Type	Code
ASZ...	3010416	E5202	3010415

POTENTIOMETER KIT FOR THE INDICATION OF LOAD POSITION

A three-pole potentiometer (1000 Ω) can be installed to check the position of the servomotor.

Burner	Code
RLS 250/M MZ	3010416

DEGASSING UNIT

It may occur that a certain amount of air is contained in the fuel sucked up by the pump.
This air may originate from the fuel itself as a consequence of depressurisation or air leaking past imperfect seals.
In double-pipe systems, the air returns to the tank from the return pipe; in single-pipe systems, the air remains in circulation causing pressure variations in the pump and burner malfunctions.
For this reason, we advise installing a degassing unit near the burner in single-pipe installations.
Degassing units are provided in two versions:

Burner	Code
RLS 250/M MZ (without filter)	20034277
RLS 250/M MZ (with filter)	20034281

Degassing unit characteristics

Burner output	80 kg/h max
Fuel pressure	0.7 bar max
Ambient temperature	40 °C max
Fuel temperature	40 °C max
Attachment connectors (without filter)	FF G 1/4 tank side FM G 3/8 conic burner side
Attachment connectors (with filter)	FF G 3/8 tank side FM G3/8 conic burner side

CONTINUOUS VENTILATION KIT

If the burner requires continuous ventilation in the stages without flame, a special kit is available as given in the following table.

Burner	Code
RLS 250/M MZ	3010094

EXTENDED HEAD KIT

“Standard head” burners can be transformed into “extended head” versions, by using the special kit. The kits available for the various burners, giving the original and the extended lengths, are listed below.

Burner	Code
RLS 250/M MZ	3010440

SOUND PROOFING BOX

If noise emission needs reducing even further, sound-proofing boxes is available.

Burner	Box type	Average noise reduction [dB(A)]	Code
RLS 250/M MZ	C7	10	3010376

SPACER KIT

If burner head penetration into the combustion chamber needs reducing, varying thickness spacers are available, as given in the following table.

Burner	Code
RLS 250/M MZ	3000722

GAS TRAINS APPROVED ACCORDING TO EN 676

Refer to the instruction manual.

B Appendix - Electrical panel layout

1	**Index of layouts**
2	References layout
3	LFL 1... Operational layout
4	LFL 1... Operational layout
5	LFL 1... Operational layout
6	Electrical connections set by installer
7	RWF40 ... Operational layout

2 Reference layout

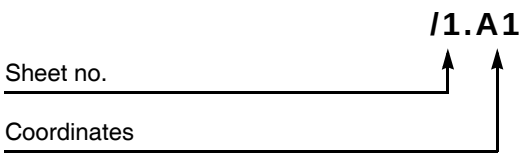

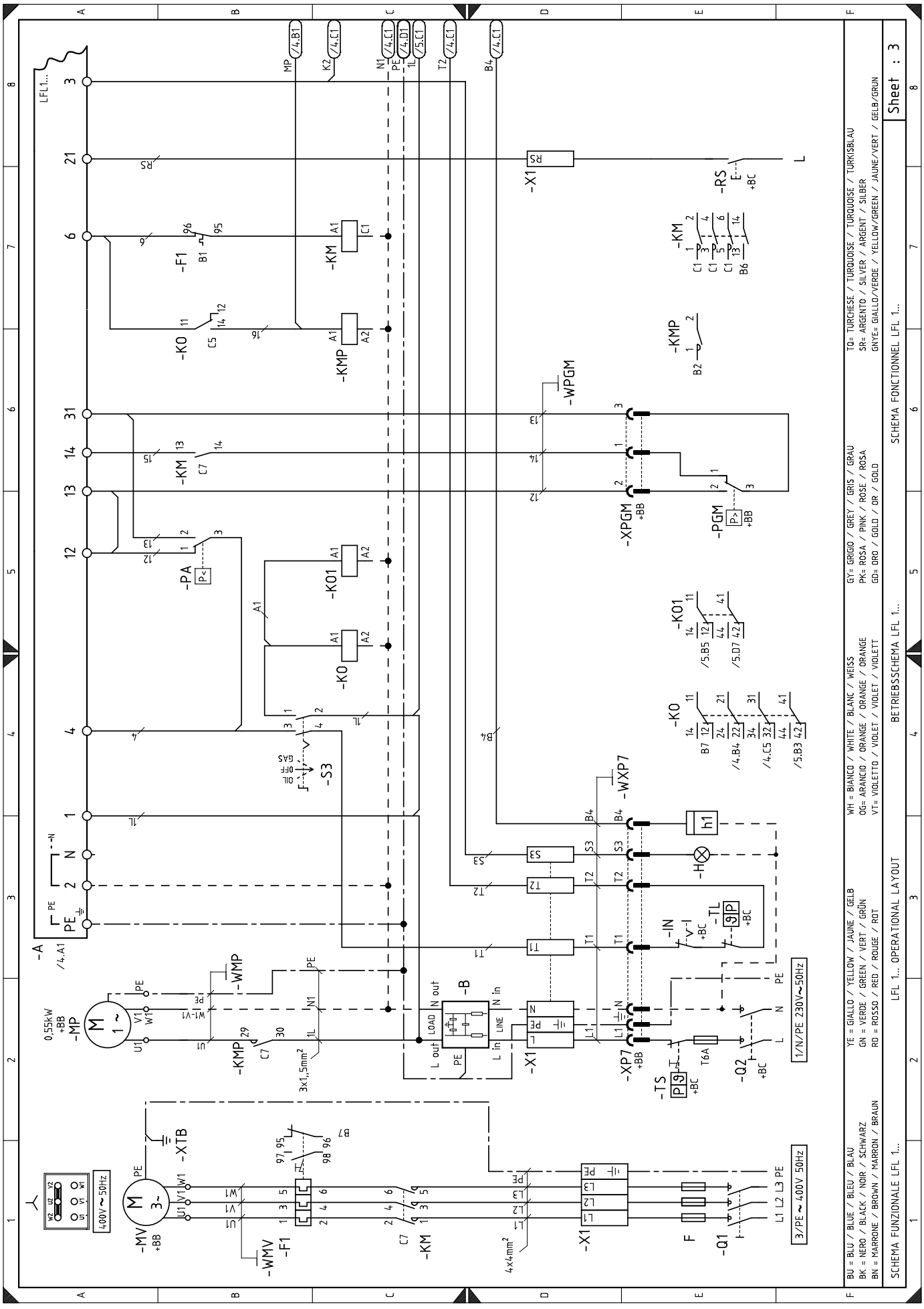
SCHEMA FUNZIONALE LFL 1...
LFL 1... OPERATIONAL LAYOUT
BETRIEBSSCHEMA LFL 1...
SCHEMA FONCTIONNEL LFL 1...
Sheet : 3
BU = BLU / BLUE / BLEU / BLAU
BK = NERO / BLACK / NOIR / SCHWARZ
BN = MARRONE / BROWN / MARRON / BRAUN
YE = GIALLO / YELLOW / JAUNE / GELB
GN = VERDE / GREEN / VERT / GRÜN
RD = ROSSO / RED / ROUGE / ROT
WH = BIANCO / WHITE / BLANC / WEISS
OG= ARANCIO / ORANGE / ORANGE / ORANGE
VT= VIOLETTO / VIOLET / VIOLET / VIOLETT
GY= GRIGIO / GREY / GRIS / GRAU
PK= ROSA / PINK / ROSE / ROSA
GD= ORO / GOLD / OR / GOLD
TQ= TURCHESE / TURQUOISE / TURQUOISE / TURKISBLAU
SR= ARGENTO / SILVER / ARGENT / SILBER
GNYE= GIALLO/VERDE / YELLOW/GREEN / JAUNE/VERT / GELB/GRUN
400V ~ 50Hz
3/PE ~ 400V 50Hz
1/N/PE 230V~50Hz
0,55kW
3x1,5mm²
4x4mm²
-A
-MP
-MV
-XTB
-WMV
-F1
-KM
-KMP
-KO
-KO1
-PA
-S3
-B
-X1
-XP7
-WXP7
-XPGM
-PGM
-WPGM
-TS
-Q1
-Q2
-IN
-TL
-H
-RS
-WMP
-WPGM

20034293

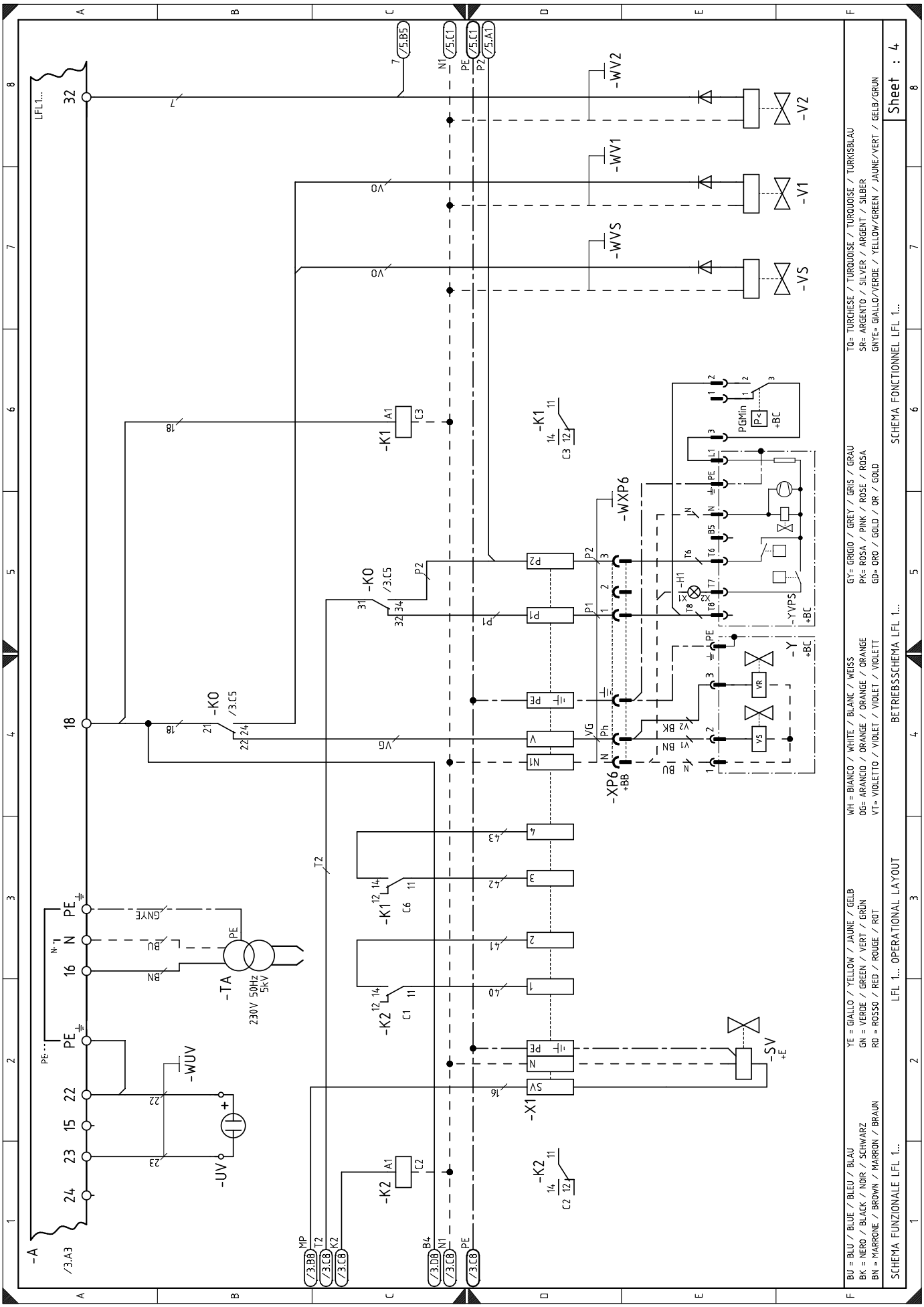
BU = BLU / BLUE / BLEU / BLAU
BK = NERO / BLACK / NOIR / SCHWARZ
BN = MARRONE / BROWN / MARRON / BRAUN
YE = GIALLO / YELLOW / JAUNE / GELB
GN = VERDE / GREEN / VERT / GRÜN
RD = ROSSO / RED / ROUGE / ROT
WH = BIANCO / WHITE / BLANC / WEISS
OG= ARANCIO / ORANGE / ORANGE / ORANGE
VT= VIOLETTO / VIOLET / VIOLET / VIOLETT
GY= GRIGIO / GREY / GRIS / GRAU
PK= ROSA / PINK / ROSE / ROSA
GD= ORO / GOLD / OR / GOLD
TQ= TURCHESE / TURQUOISE / TURQUOISE / TURKISBLAU
SR= ARGENTO / SILVER / ARGENT / SILBER
GNYE= GIALLO/VERDE / YELLOW/GREEN / JAUNE/VERT / GELB/GRUN
SCHEMA FUNZIONALE LFL 1...
LFL 1... OPERATIONAL LAYOUT
BETRIEBSSCHEMA LFL 1...
SCHEMA FONCTIONNEL LFL 1...
Sheet : 4
-A
-TA
230V 50Hz 5kV
-UV
-WUV
-K1
-K2
-K0
-XP6
-WXP6
-X1
-SV
-Y
-YVPS
-WVS
-WV1
-WV2
-VS
-V1
-V2
PGMin

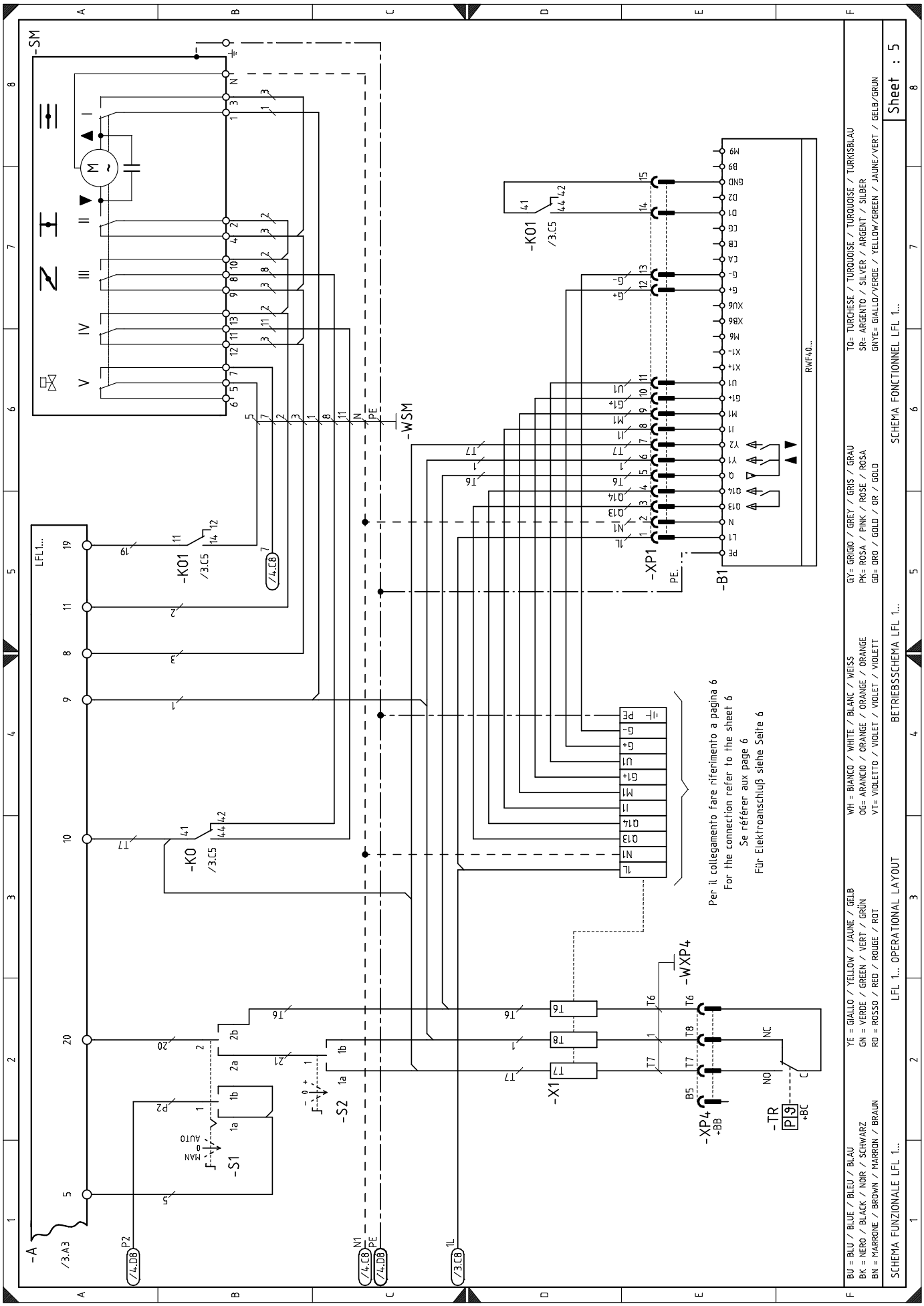
-SM
-WSM
-KO1
-KO
-XP1
-B1
-X1
-XP4
-WXP4
-TR
-S1
-S2
-A
LFL1...
RWF40...
Per il collegamento fare riferimento a pagina 6
For the connection refer to the sheet 6
Se référer aux page 6
Für Elektroanschluß siehe Seite 6
BU = BLU / BLUE / BLEU / BLAU
BK = NERO / BLACK / NOIR / SCHWARZ
BN = MARRONE / BROWN / MARRON / BRAUN
YE = GIALLO / YELLOW / JAUNE / GELB
GN = VERDE / GREEN / VERT / GRÜN
RD = ROSSO / RED / ROUGE / ROT
WH = BIANCO / WHITE / BLANC / WEISS
OG= ARANCIO / ORANGE / ORANGE / ORANGE
VT= VIOLETTO / VIOLET / VIOLET / VIOLETT
GY= GRIGIO / GREY / GRIS / GRAU
PK= ROSA / PINK / ROSE / ROSA
GD= ORO / GOLD / OR / GOLD
TQ= TURCHESE / TURQUOISE / TURQUOISE / TURKISBLAU
SR= ARGENTO / SILVER / ARGENT / SILBER
GNYE= GIALLO/VERDE / YELLOW/GREEN / JAUNE/VERT / GELB/GRUN
SCHEMA FUNZIONALE LFL 1...
LFL 1... OPERATIONAL LAYOUT
BETRIEBSSCHEMA LFL 1...
SCHEMA FONCTIONNEL LFL 1...
Sheet : 5

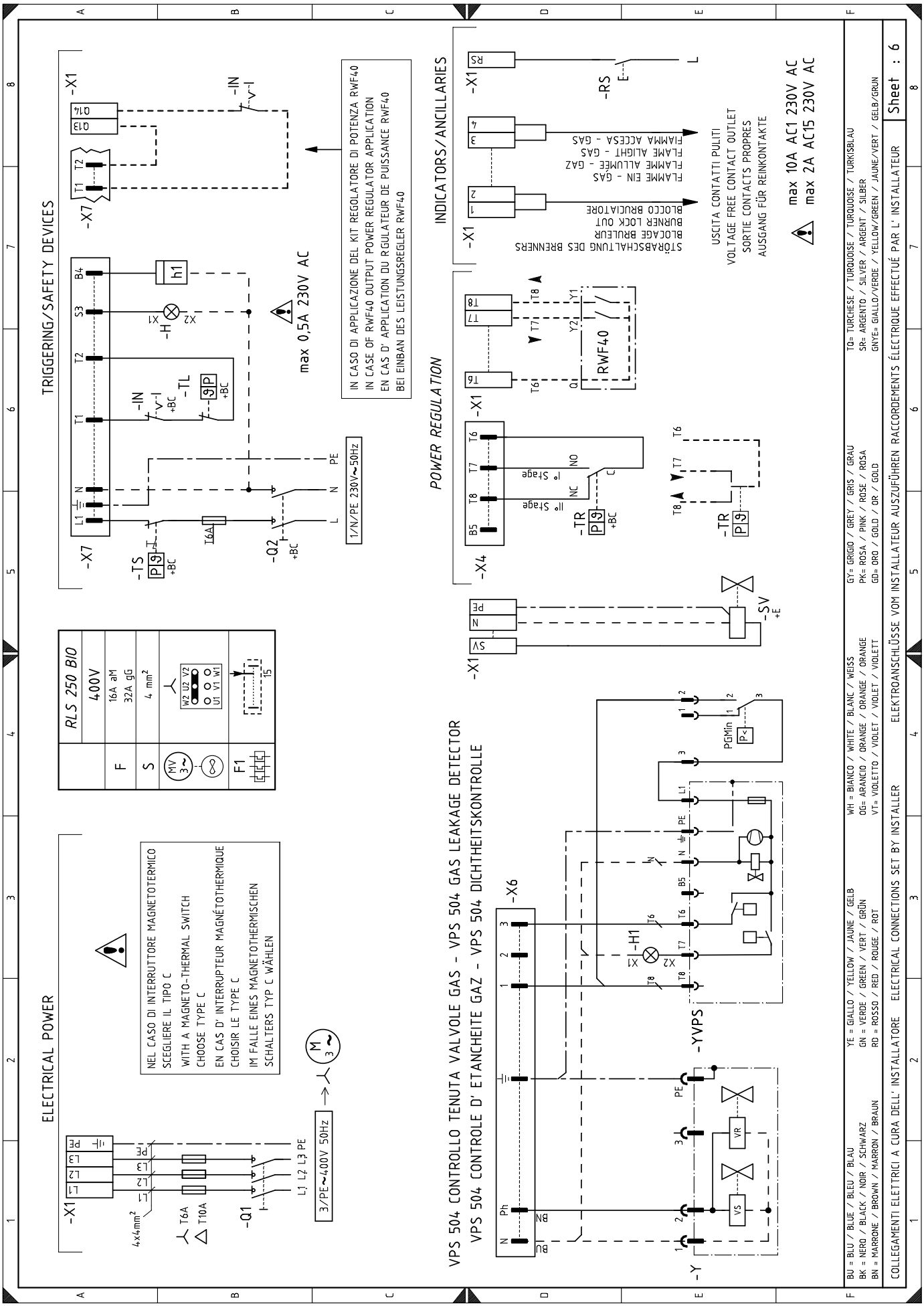
ELECTRICAL POWER
TRIGGERING/SAFETY DEVICES
POWER REGULATION
INDICATORS/ANCILLARIES
RLS 250 BIO
400V
16A aM
32A gG
4 mm²
NEL CASO DI INTERRUTTORE MAGNETOTERMICO
SCEGLIERE IL TIPO C
WITH A MAGNETO-THERMAL SWITCH
CHOOSE TYPE C
EN CAS D' INTERRUPTEUR MAGNÉTOTHERMIQUE
CHOISIR LE TYPE C
IM FALLE EINES MAGNETOTHERMISCHEN
SCHALTERS TYP C WÄHLEN
IN CASO DI APPLICAZIONE DEL KIT REGOLATORE DI POTENZA RWF40
IN CASE OF RWF40 OUTPUT POWER REGULATOR APPLICATION
EN CAS D' APPLICATION DU RGULATEUR DE PUISSANCE RWF40
BEI EINBAN DES LEISTUNGSREGLER RWF40
max 0,5A 230V AC
1/N/PE 230V~50Hz
3/PE~400V 50Hz
L1 L2 L3 PE
4x4mm²
T6A
T10A
RWF40
STÖRABSCHALTUNG DES BRENNERS
BLOCAGE BRULEUR
BURNER LOCK OUT
BLOCCO BRUCIATORE
FLAMME EIN - GAS
FLAMME ALLUMÉE - GAZ
FLAME ALIGHT - GAS
FIAMMA ACCESA - GAS
USCITA CONTATTI PULITI
VOLTAGE FREE CONTACT OUTLET
SORTIE CONTACTS PROPRES
AUSGANG FÜR REINKONTAKTE
max 10A AC1 230V AC
max 2A AC15 230V AC
VPS 504 CONTROLLO TENUTA VALVOLE GAS - VPS 504 GAS LEAKAGE DETECTOR
VPS 504 CONTROLE D' ETANCHEITE GAZ - VPS 504 DICHTHEITSKONTROLLE
BU = BLU / BLUE / BLEU / BLAU
BK = NERO / BLACK / NOIR / SCHWARZ
BN = MARRONE / BROWN / MARRON / BRAUN
YE = GIALLO / YELLOW / JAUNE / GELB
GN = VERDE / GREEN / VERT / GRÜN
RD = ROSSO / RED / ROUGE / ROT
WH = BIANCO / WHITE / BLANC / WEISS
OG= ARANCIO / ORANGE / ORANGE / ORANGE
VT= VIOLETTO / VIOLET / VIOLET / VIOLETT
GY= GRIGIO / GREY / GRIS / GRAU
PK= ROSA / PINK / ROSE / ROSA
GD= ORO / GOLD / OR / GOLD
TQ= TURCHESE / TURQUOISE / TURQUOISE / TURKISBLAU
SR= ARGENTO / SILVER / ARGENT / SILBER
GNYE= GIALLO/VERDE / YELLOW/GREEN / JAUNE/VERT / GELB/GRÜN
COLLEGAMENTI ELETTRICI A CURA DELL' INSTALLATORE
ELECTRICAL CONNECTIONS SET BY INSTALLER
ELEKTROANSCHLÜSSE VOM INSTALLATEUR AUSZUFÜHREN
RACCORDEMENTS ÉLECTRIQUE EFFECTUÉ PAR L' INSTALLATEUR
Sheet : 6

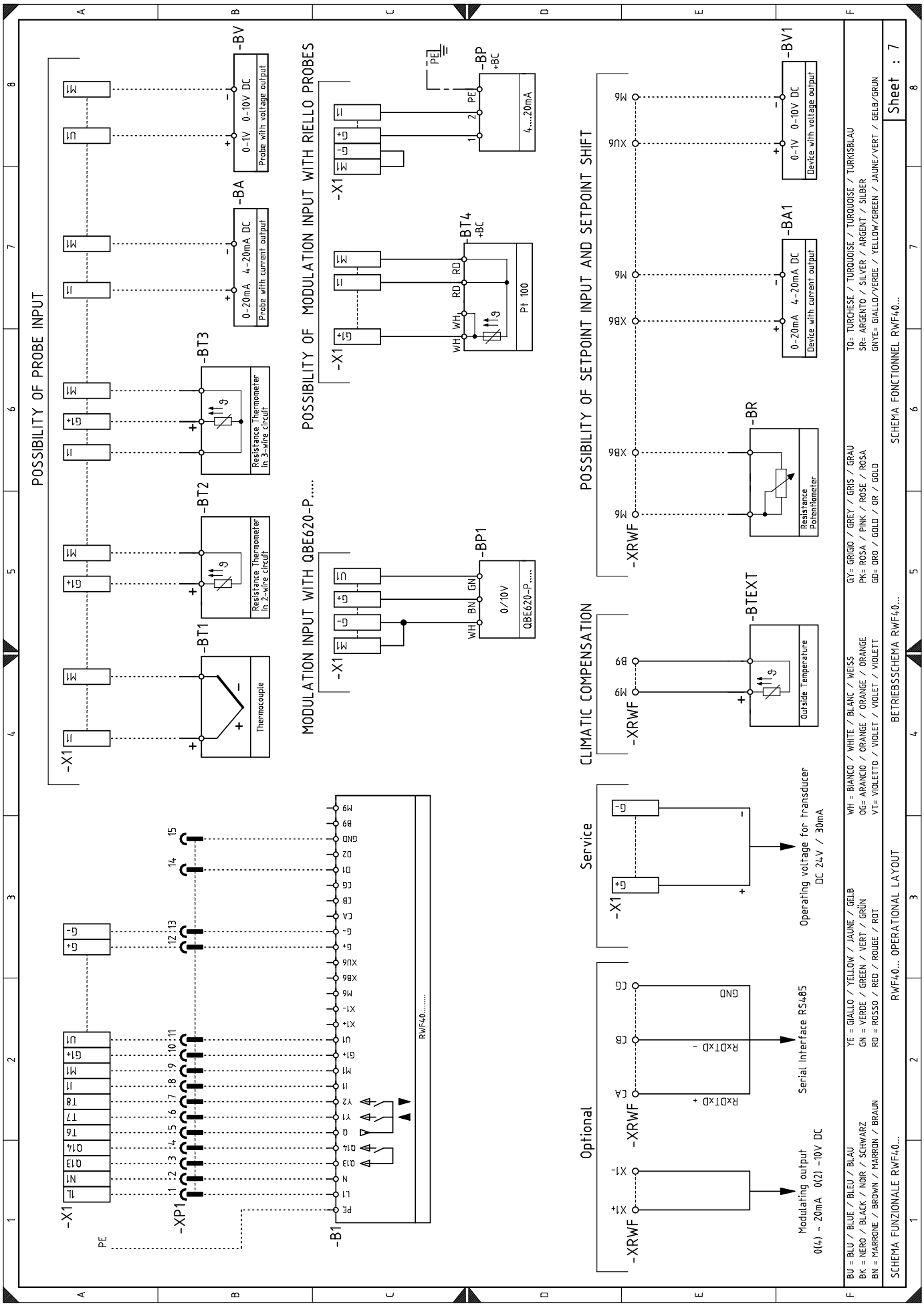
POSSIBILITY OF PROBE INPUT
-BV
0-1V 0-10V DC
Probe with voltage output
-BA
0-20mA 4-20mA DC
Probe with current output
-BT3
Resistance Thermometer in 3-wire circuit
-BT2
Resistance Thermometer in 2-wire circuit
-BT1
Thermocouple
-X1
POSSIBILITY OF MODULATION INPUT WITH RIELLO PROBES
-BP
+BC
4...20mA
-BT4
+BC
Pt 100
MODULATION INPUT WITH QBE620-P.....
-BP1
0/10V
QBE620-P.....
POSSIBILITY OF SETPOINT INPUT AND SETPOINT SHIFT
-BV1
0-1V 0-10V DC
Device with voltage output
-BA1
0-20mA 4-20mA DC
Device with current output
-BR
Resistance Potentiometer
-XRWF
CLIMATIC COMPENSATION
-BTEXT
Outside Temperature
-XRWF
Service
Operating voltage for transducer DC 24V / 30mA
Optional
Serial Interface RS485
Modulating output 0(4) - 20mA 0(2) -10V DC
-XP1
-B1
RWF40.....
BU = BLU / BLUE / BLEU / BLAU
BK = NERO / BLACK / NOIR / SCHWARZ
BN = MARRONE / BROWN / MARRON / BRAUN
YE = GIALLO / YELLOW / JAUNE / GELB
GN = VERDE / GREEN / VERT / GRÜN
RD = ROSSO / RED / ROUGE / ROT
WH = BIANCO / WHITE / BLANC / WEISS
OG= ARANCIO / ORANGE / ORANGE / ORANGE
VT= VIOLETTO / VIOLET / VIOLET / VIOLETT
GY= GRIGIO / GREY / GRIS / GRAU
PK= ROSA / PINK / ROSE / ROSA
GD= ORO / GOLD / OR / GOLD
TQ= TURCHESE / TURQUOISE / TURQUOISE / TURKISBLAU
SR= ARGENTO / SILVER / ARGENT / SILBER
GNYE= GIALLO/VERDE / YELLOW/GREEN / JAUNE/VERT / GELB/GRUN
SCHEMA FUNZIONALE RWF40...
RWF40... OPERATIONAL LAYOUT
BETRIEBSSCHEMA RWF40...
SCHEMA FONCTIONNEL RWF40...
Sheet : 7

Key to lay-out

A	Control box
B	Protection against radio interference
B1	Output power regulator RWF40
BA	DC input 4...20 mA
BA1	DC input 4...20 mA for modifying the remote setpoint
+BB	Burners components
+BC	Boiler components
BP	Pressure probe
BP1	Pressure probe
BR	Remote setpoint voltage divider
BT1	Thermocouple probe
BT2	Probe Pt100 with 2 wires
BT3	Probe Pt100 with 3 wires
BT4	Probe Pt100 with 3 wires
BTEXT	External probe for the climatic compensation of the set-point
BV	DC voltage input 0...10 V
BV1	DC voltage input 0...10 V for modifying the remote set-point
F1	Fan motor thermal cut-out
H	Remote lock-out signal
H1	VPS lock-out
IN	Burner manual stop switch
K1	Burner on voltage free contact relay
K2	Burner lock-out voltage free contact relay
KM	Motor contactor
KMP	Relay
KO	Relay
KO1	Relay
MP	Pump motor
MV	Fan motor
PA	Air pressure switch
PE	Burner ground
PGMin	Minimum gas pressure switch
PGM	Maximum gas pressure switch
Q1	Three-phase disconnect switch
Q2	Single-phase disconnect switch
RS	Remote lock-out reset button
S1	Switch for following operations: off-automatic-manual
S2	Button for: power increase/reduction
S3	Oil/gas selector
SM	Servomotor
SV	External oil valve
TA	Ignition transformer
TL	Limit pressure switch/thermostat
TR	Control pressure switch/thermostat
TS	Safety pressure switch/thermostat
UV	UV cell
VS	Safety valve
V1	1st stage adjustment valve
V2	2nd stage adjustment valve
Y	Gas adjustment valve + gas safety valve
YVPS	Gas leak detection control device
X1	Main supply terminal strip
XPGM	Maximum gas pressure switch connection plug
XP1	Socket for kit
XRWF	RWF40 terminal strip
XP7	7 pole socket
XP6	6 pole socket
XP4	4 pole socket
X7	7 pin plug
X6	6 pin plug
X4	4 pin plug
+E	External components
F	Fuses for three-phase line protection
T6A	Fuses for auxiliary line protection

RIELLO S.p.A.
I-37045 Legnago (VR)
Tel.: +39.0442.630111
http:// www.riello.it
http:// www.rielloburners.com

Subject to modifications