GB

Dual fuel gas oil/gas burners

Modulating operation

CODE	MODEL	TYPE
20057529	RLS 1000/E MX	1311 T1
20057530	RLS 1200/E MX	1312 T1

20061317 (7) - 12/2015

Translation of the original instructions

1 Declarations ... 3

2 Information and general warnings ... 4
2.1 Information about the instruction manual ... 4
2.1.1 Introduction ... 4
2.1.2 General dangers ... 4
2.1.3 Other symbols ... 4
2.1.4 Delivery of the system and the instruction manual ... 5
2.2 Guarantee and responsibility ... 5

3 Safety and prevention ... 6
3.1 Introduction ... 6
3.2 Personnel training ... 6

4 Technical description of the burner ... 7
4.1 Burner designation ... 7
4.2 Models available ... 7
4.3 Burner categories - Countries of destination ... 7
4.4 Technical data ... 8
4.5 Electrical data ... 8
4.6 Maximum dimensions ... 9
4.7 Firing rates ... 10
4.8 Test boiler ... 10
4.9 Burner description ... 11
4.10 Electrical panel description ... 12
4.11 Burner equipment ... 12
4.12 Control box for the air/fuel ratio (LMV51...) ... 13
4.13 Servomotor ... 15

5 Installation ... 16
5.1 Notes on safety for the installation ... 16
5.2 Handling ... 16
5.3 Preliminary checks ... 16
5.4 Operating position ... 17
5.5 Removal of the locking screws from the shutter ... 17
5.6 Preparing the boiler ... 17
5.6.1 Boring the boiler plate ... 17
5.6.2 Blast tube length ... 17
5.7 Securing the burner to the boiler ... 18
5.8 Access to head internal part ... 18
5.9 Nozzle installation ... 19
5.9.1 Recommended nozzle ... 19
5.10 Electrode position ... 20
5.11 Combustion head adjustment ... 20
5.12 Light oil supply ... 21
5.12.1 Double-pipe circuit ... 21
5.12.2 Loop circuit ... 21
5.12.3 Hydraulic connections ... 22
5.12.4 Hydraulic circuit diagram ... 22
5.12.5 Pressure variator ... 22
5.13 Pump ... 23
5.13.1 Technical data ... 23
5.13.2 Priming pump ... 23
5.14 Gas feeding ... 24
5.14.1 Gas feeding line ... 24
5.14.2 Gas train ... 25
5.14.3 Gas train installation ... 25

5.14.4 Gas pressure 25
5.14.5 Pilot - gas train connection 26
5.14.6 Ignition pilot burner 26
5.15 Activation of the burner lance 27
5.16 Electrical connections 28
5.16.1 Supply cables and external connections passage 28
5.17 Calibration of the thermal relay 29

6 Start-up, calibration and operation of the burner 30
6.1 Notes on safety for the first start-up 30
6.2 Adjustments prior to ignition (light oil) 30
6.2.1 Nozzle 30
6.2.2 Combustion head 30
6.2.3 Pump pressure 30
6.3 Burner ignition (light oil) 30
6.4 Adjustments prior to ignition (gas) 31
6.5 Burner start-up (gas) 31
6.6 Check motor rotation 31
6.7 Burner ignition 31
6.8 Change of fuel 32
6.9 Combustion air adjustment 32
6.9.1 Air / gas adjustment and output modulation 32
6.10 Pressure switch adjustment 33
6.10.1 Air pressure switch - check CO 33
6.10.2 Maximum gas pressure switch 33
6.10.3 Minimum gas pressure switch 33
6.10.4 PVP pressure switch kit 33
6.10.5 Oil pressure switch 34
6.11 Final checks (with burner operating) 34

7 Maintenance 35
7.1 Notes on safety for the maintenance 35
7.2 Maintenance programme 35
7.2.1 Maintenance frequency 35
7.2.2 Checking and cleaning 35
7.3 Opening the burner 37
7.4 Closing the burner 37

8 Faults - Possible causes - Solutions 38

A Appendix - Accessories 39

B Appendix - Electrical panel layout 40

1 Declarations

Declaration of conformity in accordance with ISO / IEC 17050-1		
Manufacturer:	RIELLO S.p.A.	
Address:	Via Pilade Riello, 7 37045 Legnago (VR)	
Product:	Dual fuel gas oil/ gas burners	
Model:	RLS 1000/E MX RLS 1200/E MX	
These products are in compliance with the following Technical Standards:		
EN 676		
EN 267		
EN 12100		
and according to the European Directives:		
GAD	2009/142/EC	Gas Devices Directive
MD	2006/42/EC	Machine Directive
LVD	2014/35/UE	Low Voltage Directive
EMC	2014/30/UE	Electromagnetic Compatibility
Such products are marked as follows:		
CE	RLS 1000/E MX EC-0085CN0119 Class 2 (EN 267) - Class 3 (EN 676) RLS 1200/E MX EC-0085CN0120 Class 2 (EN 267) - Class 3 (EN 676)	

The quality is guaranteed by a quality and management system certified in accordance with UNI EN ISO 9001.

Manufacturer's Declaration			
RIELLO S.p.A. declares that the following products comply with the NOx emission limits specified by German standard "**1. BImSchV revision 26.01.2010**".			
Product	Type	Model	Output
Dual fuel gas oil/ gas burners	1311 T1 1312 T1	RLS 1000/E MX RLS 1200/E MX	1200 - 10600 kW 1500 - 11500 kW

Legnago, 01.12.2015

Executive General Manager
RIELLO S.p.A. - Burner Department
Mr. U. Ferretti

Research & Development Director
RIELLO S.p.A. - Burner Department
Mr. F. Comencini

2 Information and general warnings

2.1 Information about the instruction manual

2.1.1 Introduction

The instruction manual supplied with the burner:

- ➤ is an integral and essential part of the product and must not be separated from it; it must therefore be kept carefully for any necessary consultation and must accompany the burner even if it is transferred to another owner or user, or to another system. If the manual is lost or damaged, another copy must be requested from the Technical Assistance Service of the area;
- ➤ is designed for use by qualified personnel;
- ➤ offers important indications and instructions relating to the installation safety, start-up, use and maintenance of the burner.

Symbols used in the manual

In some parts of the manual you will see triangular DANGER signs. Pay great attention to these, as they indicate a situation of potential danger.

2.1.2 General dangers

The **dangers** can be of **3 levels**, as indicated below.

DANGER

Maximum danger level!
This symbol indicates operations which, if not carried out correctly, cause serious injury, death or long-term health risks.

WARNING

This symbol indicates operations which, if not carried out correctly, may cause serious injury, death or long-term health risks.

CAUTION

This symbol indicates operations which, if not carried out correctly, may cause damage to the machine and/or injury to people.

2.1.3 Other symbols

DANGER

DANGER: LIVE COMPONENTS

This symbol indicates operations which, if not carried out correctly, lead to electric shocks with lethal consequences.

DANGER: FLAMMABLE MATERIAL

This symbol indicates the presence of flammable materials.

DANGER: BURNING

This symbol indicates the risks of burns due to high temperatures.

DANGER: CRUSHING OF LIMBS

This symbol indicates the presence of moving parts: danger of crushing of limbs.

WARNING: MOVING PARTS

This symbol indicates that you must keep limbs away from moving mechanical parts; danger of crushing.

DANGER: EXPLOSION

This symbol signals places where an explosive atmosphere may be present. An explosive atmosphere is defined as a mixture - under atmospheric conditions - of air and flammable substances in the form of gases, vapours, mist or dust in which, after ignition has occurred, combustion spreads to the entire unburned mixture.

PERSONAL PROTECTION EQUIPMENT

These symbols indicate the equipment that must be worn and kept by the operator for protection against threats against safety and/or health while at work.

OBLIGATION TO ASSEMBLE THE HOOD AND ALL THE SAFETY AND PROTECTION DEVICES

This symbol signals the obligation to reassemble the hood and all the safety and protection devices of the burner after any maintenance, cleaning or checking operations.

ENVIRONMENTAL PROTECTION

This symbol gives indications for the use of the machine with respect for the environment.

IMPORTANT INFORMATION

This symbol indicates important information that you must bear in mind.

➤ This symbol indicates a list.

Abbreviations used

Ch.	Chapter
Fig.	Figure
Page	Page
Sec.	Section
Tab.	Table

2.1.4 Delivery of the system and the instruction manual

When the system is delivered, it is important that:

➤ the instruction manual is delivered to the user by the system manufacturer, with the recommendation to keep it in the room where the heat generator is to be installed.

➤ The instruction manual shows:
- the serial number of the burner;

  .....

- the address and telephone number of the nearest Assistance Centre.

  .....
  .....
  .....

➤ The system supplier must carefully inform the user about:
- the use of the system;
- any further tests that may be required before activating the system;
- maintenance, and the need to have the system checked at least once a year by a representative of the manufacturer or another specialised technician.
  To ensure a periodic check, the manufacturer recommends the drawing up of a Maintenance Contract.

2.2 Guarantee and responsibility

The manufacturer guarantees its new products from the installation date, in accordance with the regulations in force and/or the sales contract. At the moment of the first start-up, check that the burner is integral and complete.

WARNING

Failure to observe the information given in this manual, operating negligence, incorrect installation and carrying out of non authorised modifications will result in the annulment by the manufacturer of the guarantee that it supplies with the burner.

In particular, the rights to the guarantee and the responsibility will no longer be valid, in the event of damage to things or injury to people, if such damage/injury was due to any of the following causes:

➤ incorrect installation, start-up, use and maintenance of the burner;
➤ improper, incorrect or unreasonable use of the burner;
➤ intervention of unqualified personnel;
➤ carrying out of unauthorised modifications on the equipment;
➤ use of the burner with safety devices that are faulty, incorrectly applied and/or not working;
➤ installation of untested supplementary components on the burner;
➤ powering of the burner with unsuitable fuels;
➤ faults in the fuel supply system;
➤ use of the burner even following an error and/or an irregularity;
➤ repairs and/or overhauls incorrectly carried out;
➤ modification of the combustion chamber with inserts that prevent the regular development of the structurally established flame;
➤ insufficient and inappropriate surveillance and care of those burner components most likely to be subject to wear and tear;
➤ the use of non-original components, including spare parts, kits, accessories and optional;
➤ force majeure.

The manufacturer furthermore declines any and every responsibility for the failure to observe the contents of this manual.

3 Safety and prevention

3.1 Introduction

The burners have been designed and built in compliance with current regulations and directives, applying the known technical rules of safety and envisaging all the potential danger situations.

It is necessary, however, to bear in mind that the imprudent and clumsy use of the equipment may lead to situations of death risk for the user or third parties, as well as the damaging of the burner or other items. Inattention, thoughtlessness and excessive confidence often cause accidents; the same applies to tiredness and sleepiness.

It is a good idea to remember the following:

➤ The burner must only be used as expressly described. Any other use should be considered improper and therefore dangerous.

In particular:

it can be applied to boilers operating with water, steam, diathermic oil, and to other uses expressly named by the manufacturer; the type and pressure of the fuel, the voltage and frequency of the electrical power supply, the minimum and maximum deliveries for which the burner has been regulated, the pressurisation of the combustion chamber, the dimensions of the combustion chamber and the room temperature must all be within the values indicated in the instruction manual.

➤ Modification of the burner to alter its performance and destinations is not allowed.

➤ The burner must be used in exemplary technical safety conditions. Any disturbances that could compromise safety must be quickly eliminated.

➤ Opening or tampering with the burner components is not allowed, apart from the parts requiring maintenance.

➤ Only those parts envisaged by the manufacturer can be replaced.

WARNING

The manufacturer guarantees safety and proper functioning only if all burner components are intact and positioned correctly.

3.2 Personnel training

The user is the person, body or company that has acquired the machine and intends to use it for the specific purpose. He is responsible for the machine and for the training of the people working around it.

The user:

➤ undertakes to entrust the machine exclusively to suitably trained and qualified personnel;

➤ undertakes to inform his personnel in a suitable way about the application and observance of the safety instructions. With that aim, he undertakes to ensure that everyone knows the use and safety instructions for his own duties;

➤ Personnel must observe all the danger and caution indications shown on the machine.

➤ Personnel must not carry out, on their own initiative, operations or interventions that are not within their province.

➤ Personnel must inform their superiors of every problem or dangerous situation that may arise.

➤ The assembly of parts of other makes, or any modifications, can alter the characteristics of the machine and hence compromise operating safety. The manufacturer therefore declines any and every responsibility for any damage that may be caused by the use of non-original parts.

In addition:

➤ the user must take all the measures necessary to prevent unauthorised people gaining access to the machine;

➤ the user must inform the manufacturer if faults or malfunctioning of the accident prevention systems are noticed, along with any presumed danger situation.

➤ Personnel must always use the personal protective equipment envisaged by legislation and follow the indications given in this manual.

4 Technical description of the burner

4.1 Burner designation

Series : R

Fuel :

S	Natural gas
L	Gas oil
LS	Gas oil / Methane
N	Heavy oil

Size

Adjustment :

BP	Two stage (light oil) / Proportional valve (gas)
E	Electronic cam
EV	Electronic cam with variable speed (with Inverter)
P	Proportional air/gas valve
M	Mechanical cam

Emission :

C11 or...	Class 1 EN267 - EN676
C22 or MZ	Class 2 EN267 - EN676
C33 or BLU	Class 3 EN267 - EN676
C23 or MX	Class 2 EN267 - Class 3 EN676
MX	Class 1 EN267 - Class 3 EN676

Head :

TC	Standard head
TL	Extended head

Flame control system:

FS1	Standard (1 stop every 24 h)
FS2	Continuos working (1 stop every 72 h)

Electrical supply of the system :

3/400/50	3N / 400V / 50Hz
3/230/50	3 / 230V / 50Hz

Auxiliary voltage :

230/50/60	230V / 50-60Hz
110/50/60	110V / 50-60Hz

R	LS	1000	E	MX	TC	FS1	3/400/50	230/50/60

BASIC DESIGNATION

EXTENDED DESIGNATION

4.2 Models available

Designation		Voltage	Start-up	Code
RLS 1000/E MX	TC	3/400/50	Star/Triangle	20057529
RLS 1200/E MX	TC	3/400/50	Star/Triangle	20057530

4.3 Burner categories - Countries of destination

Country of destination	Gas category
SE - FI - AT - GR - DK - ES - GB - IT - IE - PT - IS - CH - NO	I_{2H}
DE	I_{2ELL}
NL	I_{2L}
FR	I_{2Er}
BE	$I_{2E(R)B}$
LU - PL	I_{2E}

4.4 Technical data

Model			RLS 1000/E MX	RLS 1200/E MX
Type			1311 T1	1312 T1
Output (1) Delivery (1)	min - max	kW kg/h	1200/3750 ÷ 10600 100/315 ÷ 867	1500/5500 ÷ 11500 171/462 ÷ 942
Fuels			– Light oil, max. viscosity at 20 °C: 6 mm^2/s (1.5 °E - 6 cSt) – Natural gas: G20 (methane gas) - G21 - G22 - G23 - G25	
Gas pressure at max. output (2) - Gas: G20/G25		mbar	67.8/101.1	97.2/145
Operation			– Intermittent (min. 1 stop in 24 hours) – Modulating	
Pump	Output at 30 bar Pressure range Fuel temperature	kg/h bar °C max	1400 9/40 140	1826 9/40 140
Nozzles		number	1	
Standard applications			Boilers: water, steam, diathermic oil	
Ambient temperature		°C	0 - 50	
Combustion air temperature		°C max	60	
Noise levels (3)	Sound pressure Sound power	dB(A)	85.4 100.6	84.4 99.7
Weight		kg	500	540

Tab. A

(1) Reference conditions: Ambient temperature 20°C - Gas temperature 15°C - Barometric pressure 1013 mbar - Altitude 0 m a.s.l.
(2) Pressure on the test point 28(Fig. 4) with zero pressure in the combustion chamber and at maximum burner output.
(3) Sound pressure measured in manufacturer's combustion laboratory, with burner operating on test boiler and at maximum rated output. The sound power is measured with the “Free Field” method, as per EN 15036, and according to an “Accuracy: Category 3” measuring accuracy, as set out in EN ISO 3746.

4.5 Electrical data

Model			RLS 1000/E MX		RLS 1200/E MX
Electrical supply			3N ~ 400V 50 Hz		
Fan motor IE2		rpm V kW A	2935 400/690 22 38.6/22.3	2964 400/690 21 41.8/24.2	2920 400/690 25 44.1/25.5
Pump motor		rpm V kW A	1458 230/400 2.2 9.3/5.4		1400 400 4 8.2
Ignition transformer		V1 - V2 I1 - I2	230 V - 1 x 8 kV 1 A - 20 mA		
Electrical power consumption	Light oil Gas	kW max	26 24		31 27
Protection level			IP 55		

Tab. B

Model		RLS 1000/E MX		RLS 1200/E MX
Electrical supply		3N ~ 400V 50 Hz		
Fan motor IE3	rpm V kW A	2880 400/690 22 38.1/22	2880 400/690 21 38.2/22.3	2880 400/690 25 43.4/25.1
Pump motor	rpm V kW A	1458 230/400 2,2 9.3/5.4		1400 400 4 8.2
Ignition transformer	V1 - V2 I1 - I2	230 V - 1 x 8 kV 1 A - 20 mA		
Electrical power consumption Light oil Gas	kW max	27 24		32 27.2
Protection level		IP 55		

Tab. C

4.6 Maximum dimensions

The maximum dimensions of the burner are given in Fig. 1.

Bear in mind that inspection of the combustion head requires the burner to be opened and the rear part turned on the hinge.

The maximum dimensions of the open burner are indicated by the L and R positions.

The l position is reference for the refractory thickness of the boiler door.

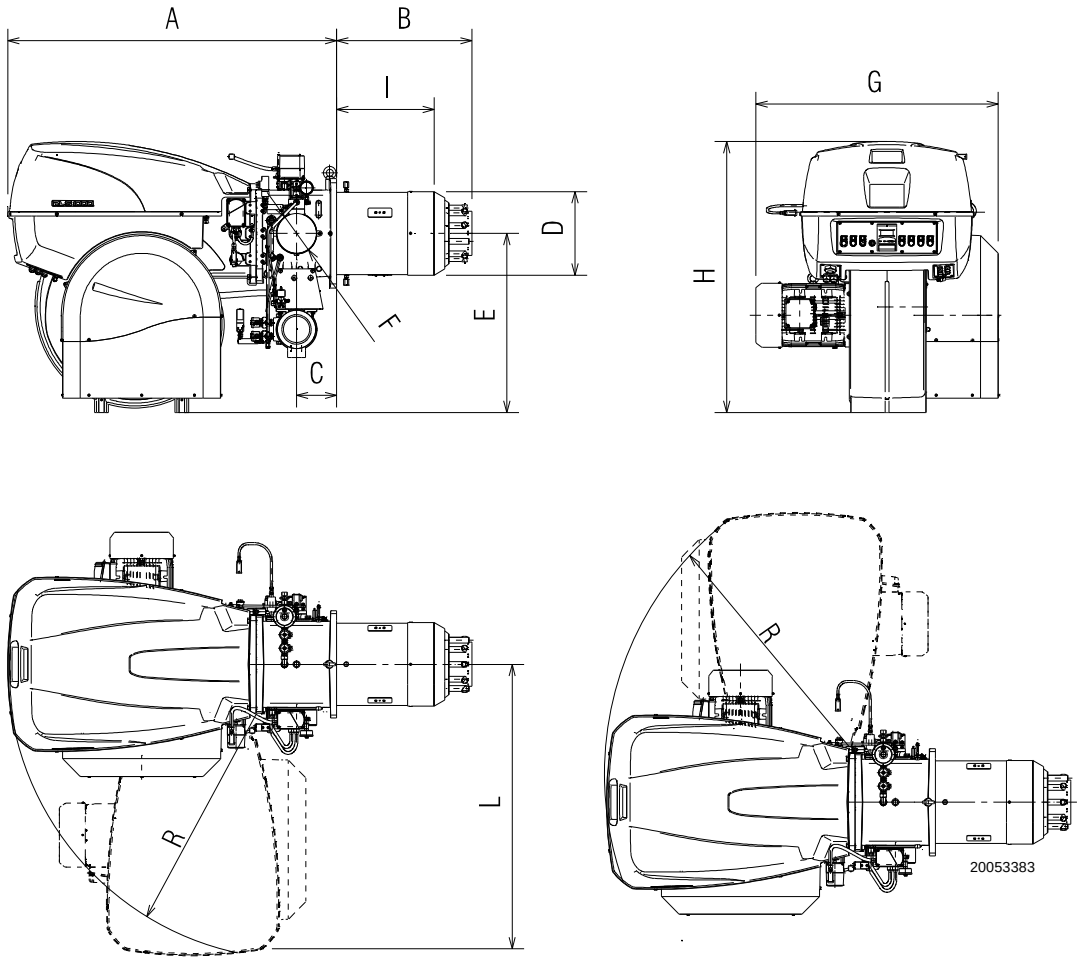

Fig. 1

mm	A	B	C	D	E	F	G	H	I	L	R
RLS 1000/E MX	1637	674	200	413	885	DN80	1206	1338	484	1425	1350
RLS 1200/E MX	1637	658	200	456	885	DN80	1250	1338	465	1425	1350

Tab. D

4.7 Firing rates

The **MAXIMUM OUTPUT** is chosen from within the continuous diagram area (Fig. 2).

The **MINIMUM OUTPUT** must not be lower than the minimum limit of the diagram:
RLS 1000/E MX = 3750 kW
RLS 1200/E MX = 5500 kW

WARNING

The firing rate value (Fig. 2) has been obtained considering an ambient temperature of 20C, an atmospheric pressure of 1013 mbar (approx. 0 m a.s.l.), and with the combustion head adjusted as shown on pag. 20.

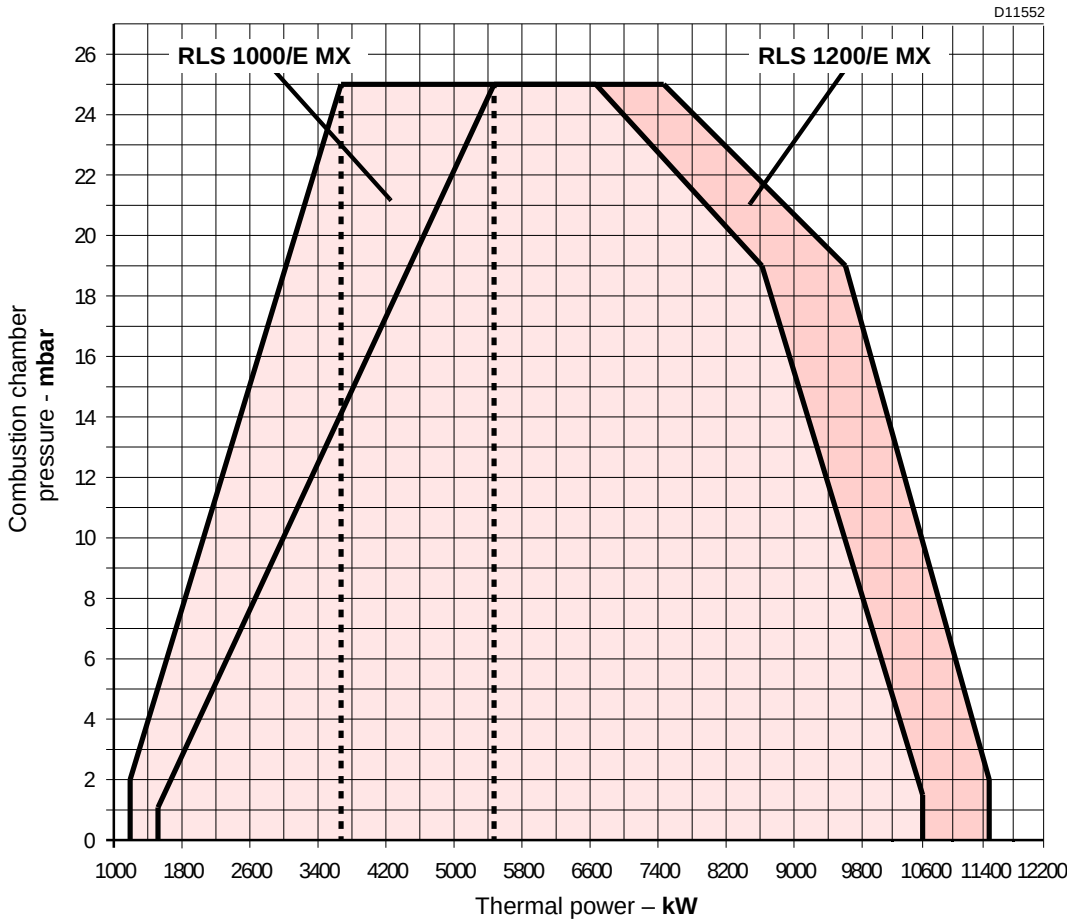

Fig. 2

4.8 Test boiler

The burner/boiler combination does not pose any problems if the boiler is EC approved and its combustion chamber dimensions are similar to those indicated in the diagram (Fig. 3).

If the burner must be combined with a boiler that has not been EC approved and/or its combustion chamber dimensions are clearly smaller than those indicated in the diagram, consult the manufacturer.

The firing rates were set in relation to special test boilers, according to EN 676 regulations.

In Fig. 3 you can see the diameter and length of the test combustion chamber.

Example:
Output 7000 kW - diameter 120 cm - length 6 m.

MODULATING RATIO

The modulating ratio, obtained in the test boilers, according to standard (EN 676 for gas, EN 267 for light oil), is of 4:1

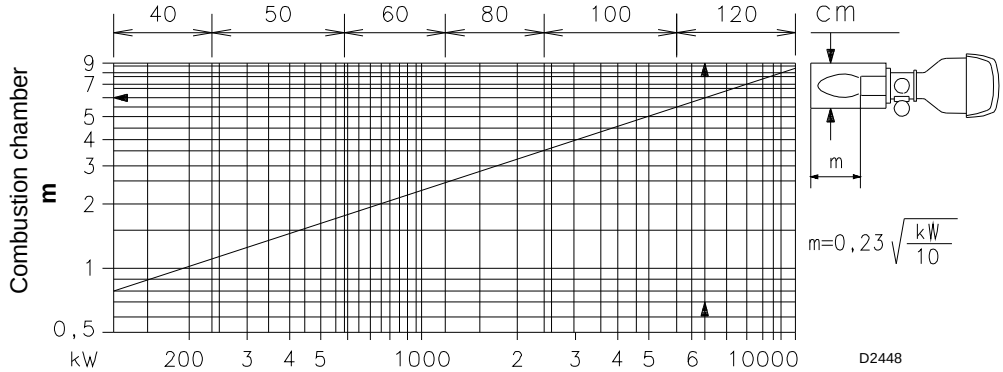

Fig. 3

4.9 Burner description

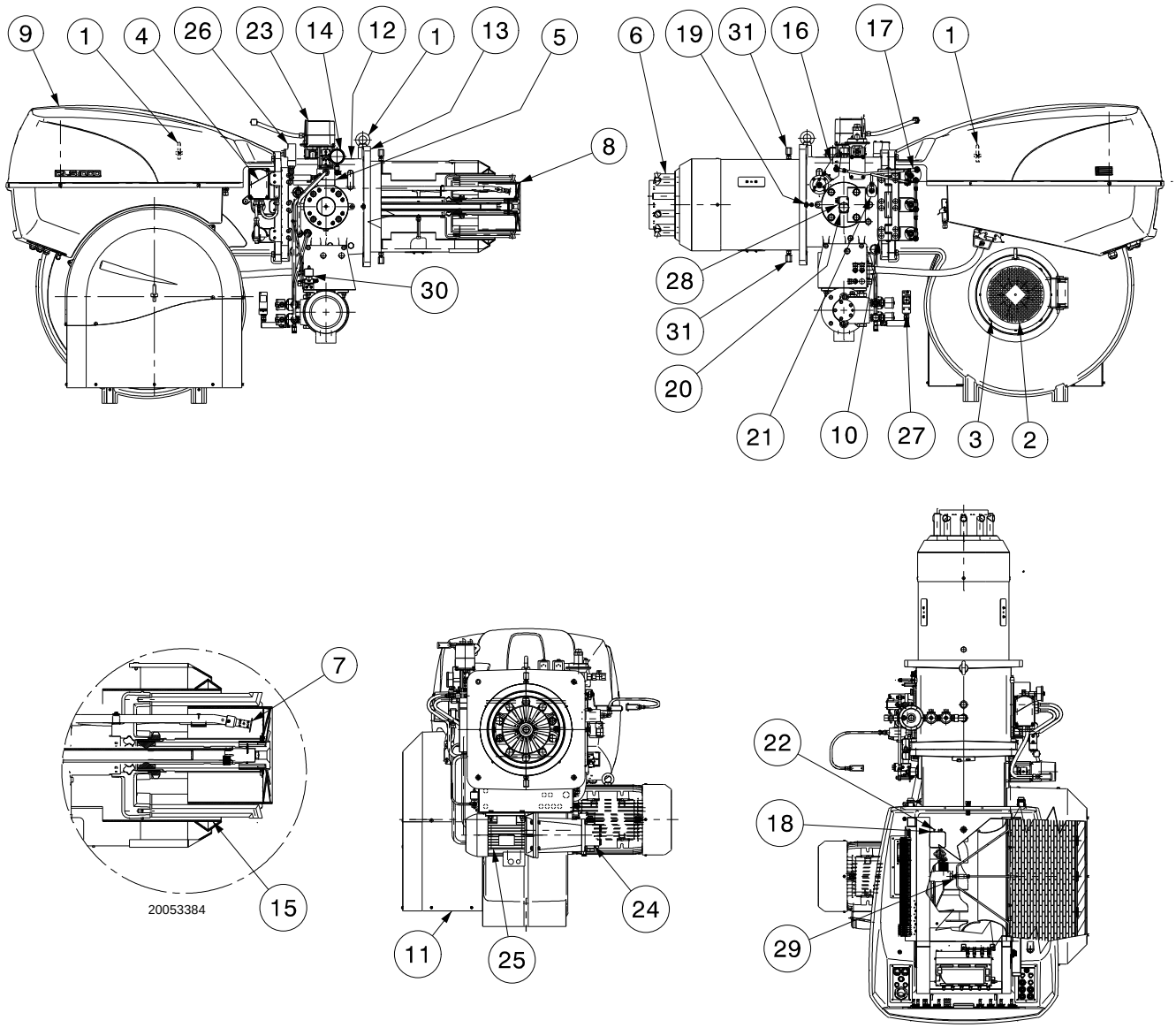

Fig. 4

1 Lifting rings
2 Fan
3 Fan motor
4 Air damper servomotor
5 Oil modulator
6 Combustion head
7 Ignition pilot
8 Flame stability disc
9 Electrical panel casing
10 Hinge for opening the burner
11 Fan air inlet
12 Pipe coupling
13 Gasket for boiler fixing
14 Nozzle return pressure gauge
15 Shutter
16 Combustion head movement lever
17 Air damper movement lever
18 Air pressure switch (differential operating type)
19 Combustion head air pressure test point
20 Maximum gas pressure switch with pressure test point
21 QRI cell
22 Pressure test point for air pressure switch “+”
23 Gas butterfly valve and oil modulator servomotor
24 Pump
25 Pump motor
26 Maximum oil pressure switch
27 Minimum oil pressure switch
28 Combustion head gas pressure test point
29 Gas regulator
30 3-way valve for the mechanical activation of the burner lance
31 Locking screws of the shutter during the transport (replace them with the screws M12x25 supplied with the burner).

CAUTION

The burner can be opened to the right or to the left without links to the fuel supply side.

When the burner is closed, the hinge can be refitted on the opposite side.

WARNING

The gas can only enter from the right side of the burner as shown in Fig. 4.

4.10 Electrical panel description

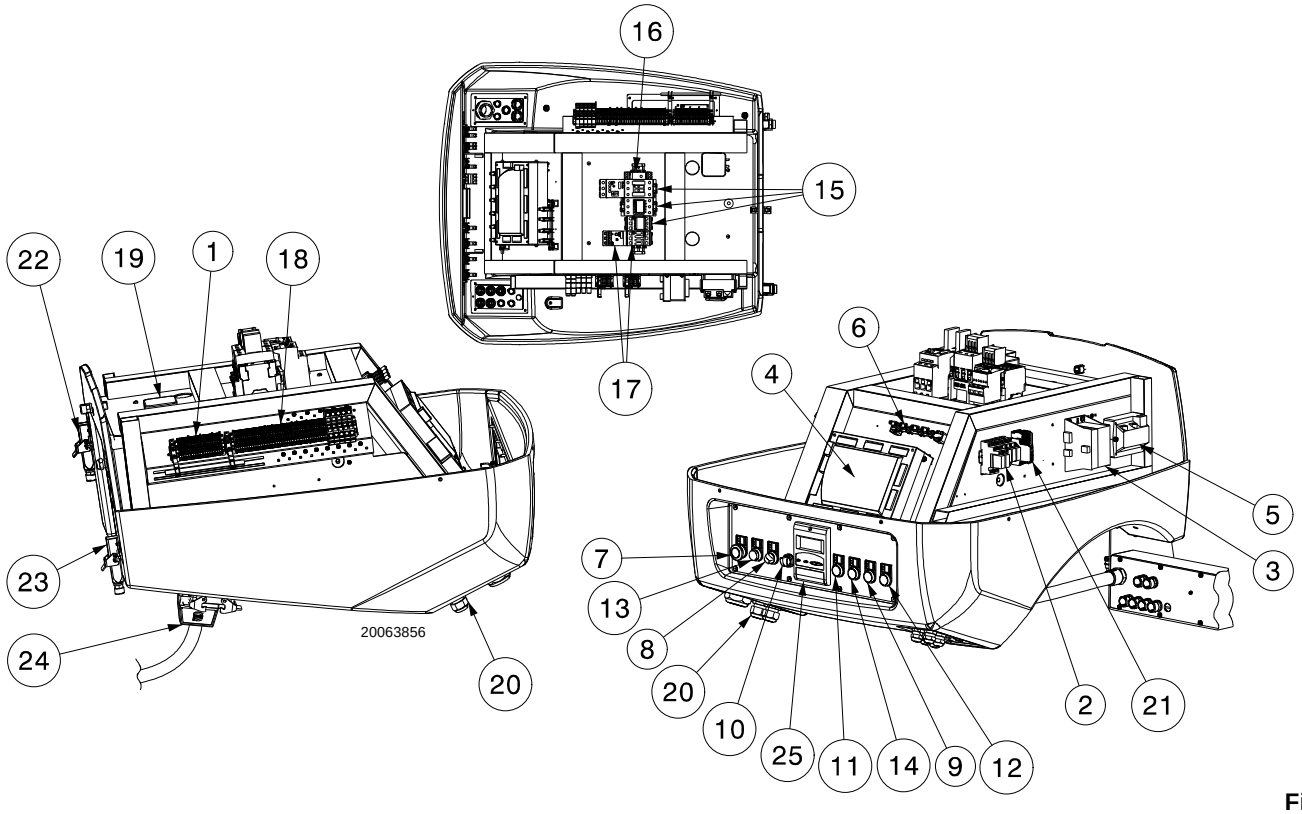

Fig. 5

1 Terminal board for kits
2 Clean contacts output relay
3 Electronic cam transformer
4 Electronic control box
5 Ignition transformer
6 Shielding terminals
7 Stop push-button
8 Off-automatic selector
9 Light signalling of main fuel valve open
10 Fuel selector and enable signal to remote fuel selector
11 Light signalling of mains live state
12 Light signalling of fan motor lockout and pump motor
13 Light signalling of burner lockout and reset switch
14 Heat request signal
15 Fan motor contactor and thermal relay, star-triangle starter
16 Timer
17 Pump motor contactor and thermal relay
18 Main terminal supply board
19 Air pressure switch
20 Supply cables, external connections and kits
21 Auxiliary circuits fuse
22 Plug/socket servomotor
23 Flame sensor plug/sensor socket
24 Oil valve plug/socket/Pump motor/PGm (Deriv. unit)
25 AZL display

NOTE

Two types of burner failure may occur:

➤ **Control box lockout:** if the pushbutton 13)(Fig. 5) (**red led**) lights up, it indicates that the burner is in lockout. release by pressing the pushbutton 13)(Fig. 5).

➤ **Motors lockout**: release by pressing the button on the relevant thermal relay.

4.11 Burner equipment

Gasket for gas train flange . . . . . No. 1
M 16 x 70 gas flange fastener screws . . . . . No. 8
Thermal insulation screen . . . . . No. 1
M 20 x 70 screws to secure the burner flange to the boiler . . . . . No. 4
Pressure switch (for leak detection control) . . . . . No. 1
Light gas flexible hoses . . . . . No. 2
Fitting 1” 1/2 - 3/4” (RLS 1200/E MX). . . . . No. 1
Fitting 3/4” - 1/2” (RLS 1200/E MX) . . . . . No. 1
Rotating elbow 1/2” (RLS 1000/E MX) . . . . . No. 1
Instructions. . . . . No. 1
Spare parts list . . . . . No. 1

4.12 Control box for the air/fuel ratio (LMV51...)

Warnings

WARNING

To avoid accidents, material or environmental damage, observe the following instructions!

The LMV51... is a safety device! Avoid opening or modifying it, or forcing its operation. Riello S.p.A. cannot assume any responsibility for damage resulting from unauthorised interventions!

Risk of explosion!

An incorrect configuration can provoke fuel overcharging, with the consequential risk of explosion! Operators must be aware that incorrect settings made on the AZL5… display and operating unit and incorrect settings of the fuel and / or air actuator positions can lead to dangerous burner operating conditions.

- ➤ All interventions (assembly and installation operations, assistance, etc.) must be carried out by qualified personnel.
- ➤ Before modifying the wiring in the LMV52 control box connection area, fully disconnect the system from the power supply (omnipolar separation). Check the system is not powered and cannot be accidentally reconnected. Failure to do this will lead to the risk of electrocution.
- ➤ Protection against electrocution from the LMV5... control box and all connected electric components is obtained with correct assembly.
- ➤ Before any intervention (assembly and installation operations, assistance, etc.), ensure the wiring is in order and that the parameters are correctly set, then make the safety checks.
- ➤ Falls and collisions can negatively affect the safety functions.
  In this case, the control box must not be operated, even if it displays no evident damage.
- ➤ In programming mode, the position check of actuators and VSD (checking electronic fuel / air ratio control) is different from the check during automatic operation.
  As for automatic operation, the actuators are guided together to the positions requested and, if an actuator does not reach the position requested, adjustments are made until the position is actually reached. However, in contrast to automatic operation, there are no time limits to these corrective actions.
  The other actuators maintain their positions until all actuators have reached the positions currently required.
  This is absolutely important to set the fuel / air ratio control system.
  During the time the fuel / air ratio curves are being programmed, the person making the plant settings must continuously monitor the quality of the combustion process (e.g. by means of a flue gas analyzer).
  Also, if combustion levels are poor, or in the event of dangerous situations, the commissioning engineer must take appropriate action (e.g. switching off manually).

To ensure the safety and reliability of the LMV5... system, the following instructions must also be followed:

– avoid conditions that can favour the development of condensate and humidity. Otherwise, before switching on again, make sure that the entire control box is perfectly dry!
– Static charges must be avoided since they can damage the control box's electronic components when touched.

Fig. 6

Mechanical structure

The LMV5... control box is a system to check the burners, based on a microprocessor and equipped with components to adjust and monitor medium and large capacity forced draught burners. The base control box of the LMV5... system incorporates the following components:

- Burner control with gas valve proving system
- Electronic fuel / air ratio control with a maximum of 4 (LMV51…) or 6 (LMV52…) actuators
- Optional PID temperature / pressure controller (load controller)
- Optional VSD module Mechanical design

Installation notes

- Check the electric wiring inside the boiler complies with the national and local safety regulations.
- Do not confuse the powered conductors with the neutral ones.
- Make certain that strain relief of the connected cables is in compliance with the relevant standards (e.g. as per DIN EN 60730 and DIN EN 60 335).
- Ensure that spliced wires cannot get into contact with neighbouring terminals. Use adequate ferrules.
- Arrange the HV ignition cables separately, as far as possible from the control box and the other cables.
- The burner manufacturer must protect unused AC 230 V terminals with dummy plugs (refer to sections Suppliers of other accessory items).
- When wiring the unit, make sure that AC 230 V mains voltage cables are run strictly separate from extra low-voltage cables to avoid risks of electrical shock hazard.

Electrical connection of flame detector

It is important for signal transmission to be almost totally free of any disturbances or loss:

- always separate the detector cables from the other cables:
  – Line capacitance reduces the magnitude of the flame signal.
  – Use a separate cable.
- Respect the allowed cable lengths.

Technical data

LMV51... basic unit	Mains voltage	AC 230 V -15 % / +10 %
	Mains frequency	50 / 60 Hz ±6 %
	Power absorption	< 30W (normal)
	Safety class	I, with components in compliance with II and III, according to DIN EN 60730-1
Load on 'input' terminals	F1 unit fuse (internal)	6.3 AT
	Main fuse of perm. network (external)	Max. 16 AT
	Undervoltage • Safety switch-off from operating position to mains voltage • Restart when mains voltage picks up	 < AC 186 V > AC 188 V
	Oil pump / magnetic clutch (nominal voltage) • Nominal current • Power factor	 2A cosφ > 0.4
	Air pressure switch test valve (nominal voltage) • Nominal current • Power factor	 0.5A cosφ > 0.4
Load on 'output' terminals	**Total load on the contacts:** • Mains voltage • Total unit input current (safety circuit) load on contacts due to: - Fan motor contactor - Ignition transformer - Valve - Oil pump / magnetic clutch	 AC 230 V -15 % / +10 % Max. 5 A
	Single contact loading: Fan motor contactor (nominal voltage) • Nominal current • Power factor	 1A cosφ > 0.4
	Alarm output (nominal voltage) • Nominal current • Power factor	 1A cosφ > 0.4
	Ignition transformer (nominal voltage) • Nominal current • Power factor	 2A cosφ > 0.2
	Fuel gas valve (nominal voltage) • Nominal current • Power factor	 2A cosφ > 0.4
	Fuel oil valve (nominal voltage) • Nominal current • Power factor	 1A cosφ > 0.4
Cable lengths	Main line	Max. 100 m (100 pF/m)
Environmental conditions	Operation Climatic conditions Mechanical conditions Temperature range Humidity	DIN EN 60721-3-3 Class 3K3 Class 3M3 -20...+60°C < 95% RH

Tab. E

4.13 Servomotor

Warnings

WARNING

To avoid accidents, material or environmental damage, observe the following instructions!

Avoid opening, modifying or forcing the actuators.

➤ All interventions (assembly and installation operations, assistance, etc.) must be carried out by qualified personnel.
➤ Before modifying the wiring in the SQM4... system connection area, fully disconnect the burner control device from the power supply (omnipolar separation).
➤ To avoid the risk of electrocution, protect the connection terminals in a suitable manner and correctly fix the cover.
➤ Check the wiring is in order.
➤ Falls and collisions can negatively affect the safety functions. In this case, the unit must not be operated, even if it displays no evident damage.

Assembly notes

- Check the relevant national safety standards are respected.
- The connection between the actuator command shaft and the control element must be rigid, without any mechanical play.
- To avoid an excessive load on the bearings due to rigid hubs, the use of compensation clutches without any mechanical play is recommended (e.g. metal bellows-type clutches).

Installation notes

- Arrange the H.V. ignition cables separately, as far as possible from the control box and the other cables.
- To avoid the risk of electrocution, make sure that the 230V AC section of the SQM4... unit is fully separated from the functional low-voltage section.
- The static torque is reduced when the electrical supply of the actuator is switched off.
- The housing cover may only be removed for short periods of time for wiring or when making the addressing. In similar cases, make sure that dust or dirt does not penetrate inside the actuator.
- The actuator comprises a PCB with ESD-sensitive components.
- The top side of the board carries a cover which affords protection against direct contact. This protective cover must not be removed! The underside side of the board must not be touched.

WARNING

During the maintenance or replacement of the actuators, be careful not to invert the connectors.

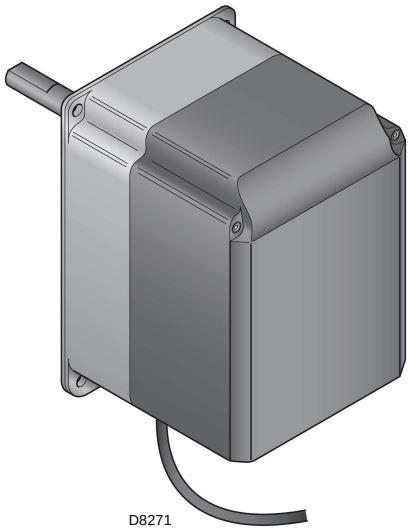

Fig. 7

Technical data

Operating voltage	AC 2 x 12V via bus cable from the base unit or via a separate transformer
Safety class	extra low-voltage with safe isolation from mains voltage
Power absorption – SQM45... – SQM48...	 9...15 VA 26...34 VA
Degree of protection	to EN 60 529, IP 54, provided adequate cable entries are used
Cable connection	RAST3,5 connectors
Rotation direction	- Anticlockwise (standard) - Clockwise (inverted rotation)
Nominal torque (max) – SQM45... – SQM48...	 3 Nm 20 Nm
Holding torque (max) – SQM45... – SQM48...	 1.5 Nm 20 Nm
Running time (min.) for 90° – SQM45... – SQM48...	 10 s. 30 s.
Weight – SQM45... – SQM48...	 1 kg approx. 1.6 kg approx.
Environmental conditions:	
Operation	DIN EN 60 721-3-3
Climatic conditions	Class 3K3
Mechanical conditions	Class 3M3
Temperature range	-20...+60°C
Humidity	< 95% RH

Tab. F

5 Installation

5.1 Notes on safety for the installation

After carefully cleaning all around the area where the burner will be installed, and arranging the correct lighting of the environment, proceed with the installation operations.

DANGER

All the installation, maintenance and disassembly operations must be carried out with the electricity supply disconnected.

WARNING

The installation of the burner must be carried out by qualified personnel, as indicated in this manual and in compliance with the standards and regulations of the laws in force.

DANGER

Combustion air inside the boiler must be free from hazardous mixes (e.g.: chloride, fluoride, halogen); if present, it is highly recommended to carry out cleaning and maintenance more frequently.

5.2 Handling

The packaging of the burner includes a wooden platform, so it is possible to move the burner (still packaged) with a transpallet truck or fork lift truck.

WARNING

The handling operations for the burner can be highly dangerous if not carried out with the greatest attention: keep any unauthorised people at a distance; check the integrity and suitableness of the available means of handling.
Check also that the area in which you are working is empty and that there is an adequate escape area (i.e. a free, safe area to which you can quickly move if the burner should fall).
When handling, keep the load at not more than 20-25 cm from the ground.

After positioning the burner near the installation point, correctly dispose of all residual packaging, separating the various types of material.

CAUTION

Before proceeding with the installation operations, carefully clean all around the area where the burner will be installed.

5.3 Preliminary checks

Checking the consignment

CAUTION

After removing all the packaging, check the integrity of the contents. In the event of doubt, do not use the burner; contact the supplier.

The packaging elements (wooden cage or cardboard box, nails, clips, plastic bags, etc.) must not be abandoned as they are potential sources of danger and pollution; they should be collected and disposed of in the appropriate places.

Checking the characteristics of the burner

Check the identification label of the burner, showing:
- ➤ the model (**A**)(Fig. 8) and type of burner (**B**);
- ➤ the year of manufacture, in cryptographic form (**C**);
- ➤ the serial number (**D**);
- ➤ the data for electrical supply and the protection level (**E**);
- ➤ the absorbed electrical power (**F**);
- ➤ the types of gas used and the relative supply pressures (**G**);
- ➤ the data of the burner's minimum and maximum output possibilities (**H**) (see Firing rate)
  Warning. The burner output must be within the boiler's firing rate;
- ➤ the category of the appliance/countries of destination (**I**).
- ➤ light oil maximum viscosity (**L**).

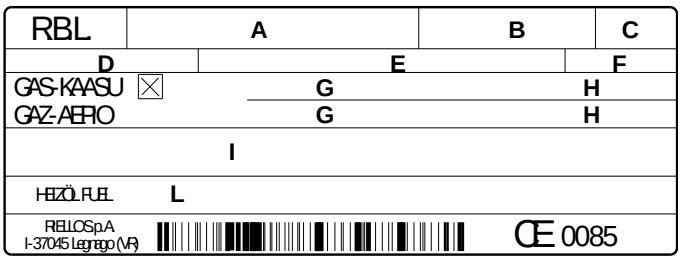

D9243

Fig. 8

WARNING

A burner label that has been tampered with, removed or is missing, along with anything else that prevents the definite identification of the burner and makes any installation or maintenance work difficult.

5.4 Operating position

WARNING

- The burner is designed to operate only in positions **1**, **2**, **3** and **4** (Fig. 9).
- Installation **1** is preferable, as it is the only one that allows the maintenance operations as described in this manual.
- Installations **2**, **3** and **4** permit operation but make maintenance and inspection of the combustion head more difficult.

DANGER

- Any other position could compromise the correct operation of the appliance.
- Installation **5** is prohibited for safety reasons.

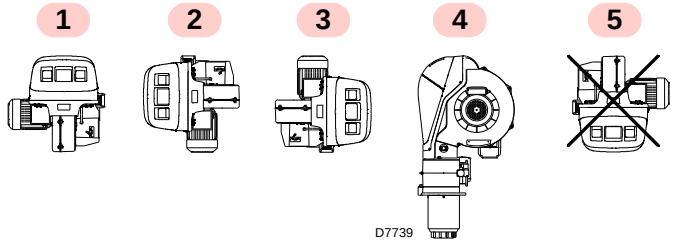

Fig. 9

5.5 Removal of the locking screws from the shutter

Remove the screws and the nuts 1) and 2)(Fig. 10), before installing the burner on the boiler. Replace them with the screws 3) M12x25 supplied with the burner.

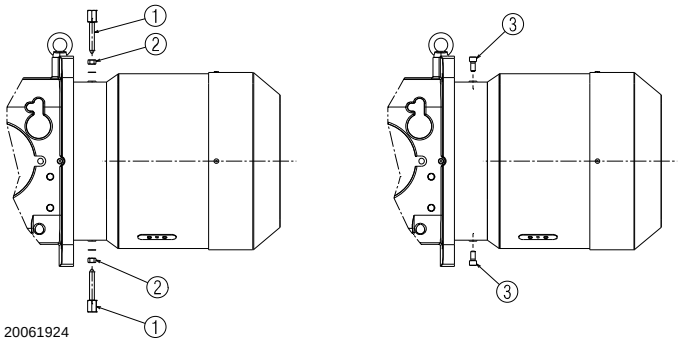

Fig. 10

5.6 Preparing the boiler

5.6.1 Boring the boiler plate

Drill the combustion chamber locking plate as shown in Fig. 11. The position of the threaded holes can be marked using the thermal screen supplied with the burner.

5.6.2 Blast tube length

The length of the blast tube must be selected according to the indications provided by the manufacturer of the boiler, and in any case it must be greater than the thickness of the boiler door complete with its fettling.

For boilers with front flue passes 1)(Fig. 12) or flame inversion chamber, a protection in refractory material 5) must be inserted between the boiler fettling 2) and the blast tube 4).

This protective fettling must not compromise the extraction of the blast tube.

For boilers with a water-cooled frontpiece, a refractory lining 2)-5)(Fig. 12) is not necessary, unless expressly requested by the boiler manufacturer.

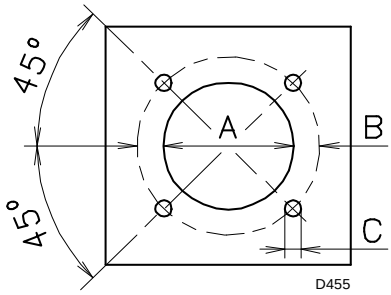

Fig. 11

mm	A	B	C
RLS 1000/E MX	460	608	M 20
RLS 1200/E MX	500	608	M 20

Tab. G

5.7 Securing the burner to the boiler

Prepare a suitable lifting system using rings 3) (Fig. 12).

➤ Insert the thermal protection supplied with the blast tube 4).
➤ Insert the entire burner on the boiler hole, previously fitted, as in Fig. 11, and fix it with the screws supplied.

WARNING

The seal between burner and boiler must be airtight.

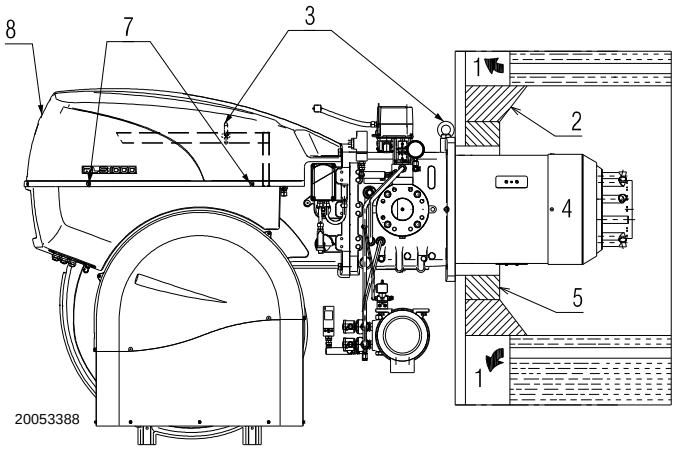

Fig. 12

5.8 Access to head internal part

In order to reach inside the combustion head (Fig. 13) proceed as follows:

➤ disconnect the derivation unit socket 1) and the QRI photocell 2);
➤ disconnect the fuel servomotor socket;
➤ disconnect the leverage of the head motor drive 3);
➤ remove the 4 fixing screws 4);
➤ open the burner on the hinge;
➤ disconnect the cable of the pilot electrode 5);
➤ release the ignition pilot fitting 6);
➤ remove the screw/gas pressure socket 7) of the head;
➤ disconnect the light oil pipes unscrewing the two pipe fittings 8);
➤ remove the oil lance lockout screw 9);
➤ release the oil lance from the combustion head 10);
➤ pull out the inner part of the head 11).

Be careful as some drops of fuel may leak out during this phase.

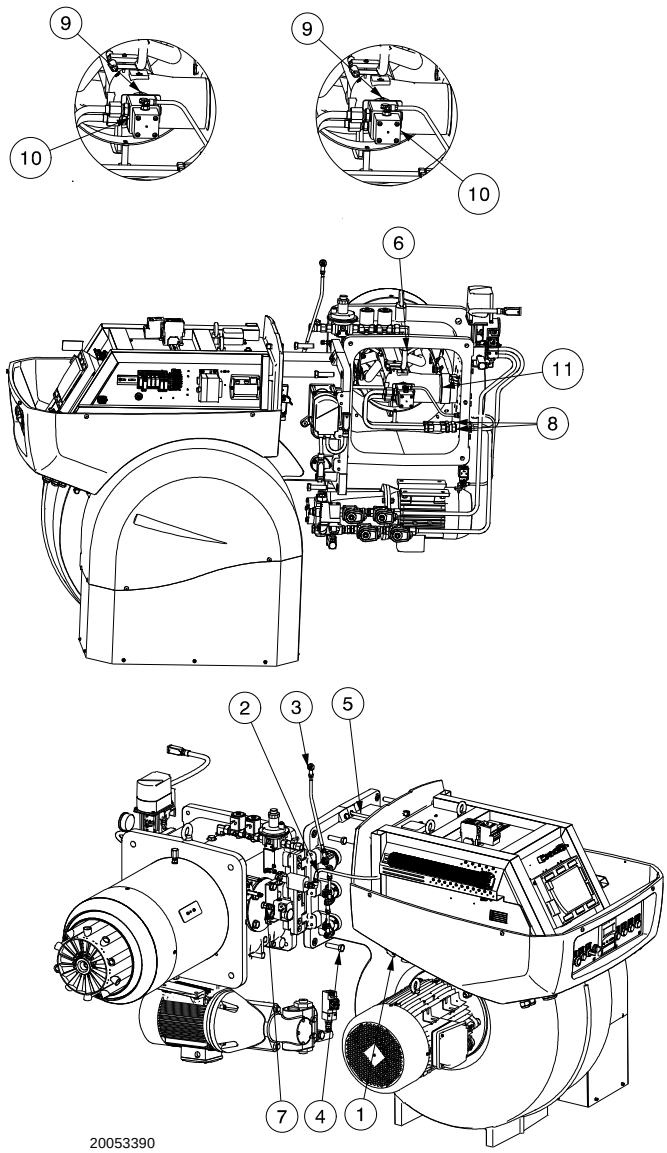

Fig. 13

5.9 Nozzle installation

The burner complies with the emission requests specified in standard EN 267. To guarantee a constant level of emissions, it is necessary to use the nozzles recommended and/or alternatives indicated by Riello in the instructions and warnings.

WARNING

It is advisable to replace the nozzle once a year during periodical maintenance.

CAUTION

The use of nozzles other than those specified by Riello S.p.A. and inadequate regular maintenance may result into emission limits non-conforming to the values set forth by the regulations in force, and in extremely serious cases, into potential hazards to people and objects.

The manufacturing company shall not be liable for any such damage arising from nonobservance of the requirements contained in this manual.

Fit the nozzle with a 24 mm (for RLS 1000/E MX) and 41 mm (for RLS 1200/E MX) box wrench, passing from the centre opening of the flame stability disc (Fig. 14).

Fit the nozzles with the fuel interception rod on the nozzle holder. To calibrate the delivery range of operation of the nozzle, adjust the fuel pressure on the nozzle return line, according to Tab. H.

WARNING

- ➤ Do not use any sealing products such as gaskets, sealing compound, or tape.
- ➤ Be careful to avoid damaging the nozzle sealing seat.
- ➤ The nozzle must be screwed into place tightly but not to the maximum torque value provided by the wrench.

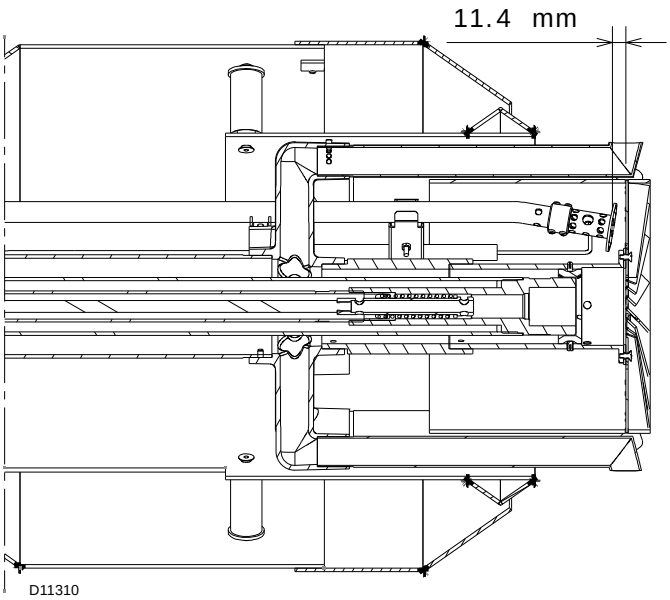

Fig. 14

5.9.1 Recommended nozzle

Model	Nozzle	
RLS 1000/E MX	– Bergonzo – Fluidics	type B5 60° type W2 60°
RLS 1200/E MX	– Bergonzo	type C3 - C5 60°

Complete range of nozzles:

- Bergonzo type B5 60°
  350 - 375 - 400 - 425 - 450 - 475 - 500 - 525 - 550 - 575 - 600 650 - 700 - 750 - 800 - 850 - 900.
- Bergonzo type C3 - C5 60°
  700 - 800 - 900 - 1000 - 1100
- Fluidics type W2 60°:
  375 - 400 - 450 - 500 - 550 - 600 - 650 - 700 - 750.

Nozzle	kg/h	Delivery pressure (bar)	Return pressure (bar)	kg/h	kW
Bergonzo B5 60°	350	18	8	100	1200
		20	17.5	315	3750
	600	20	6	140	1675
		22	16	563	6700
	750	20	6.5	180	2150
		22	19	722	8600
	900	16	4	168	2000
		20	15	867	10300
Bergonzo C3 - C5 60°	700	18	3	172	2043
		20	16	462	5500
	700	18	3	172	2043
		20	19	635	7550
	900	17	5	237	2815
		18	17.5	791	9400
	1100	16	6	273	3242
		18	16.5	961	11425

Tab. H

5.10 Electrode position

WARNING

Place the electrode on the ignition pilot observing the dimensions specified in Fig. 15.

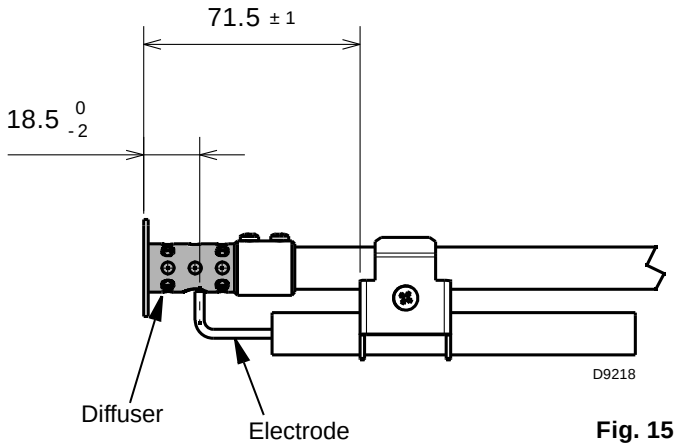

Fig. 15

5.11 Combustion head adjustment

The air damper servomotor 4)(Fig. 4), beyond varying the air output according to the output demand, through a leverage varies the combustion head adjustment.

This system allows an optimum adjustment also at minimum firing rate. Similarly to servomotor rotation, it is possible to vary the opening of the combustion head moving the tie-rod on the holes (5-6-7-8-10)(Fig. 16).

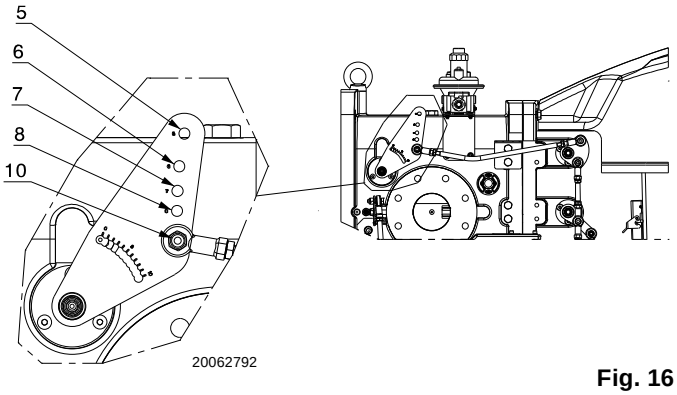

Fig. 16

The selection of the hole to be used is determined based on the maximum output requested, as illustrated in Tab. I.

In the factory, the adjustment is adjusted for the maximum stroke (hole 10, Fig. 16).

	Leverage hole	Output (kW) From	A
RLS 1000	5	1200	3750
	5	3750	6700
	8	6700	8600
	8	8600	10600
RLS 1200	5	1500	5500
	5	5500	7500
	6	7500	9600
	10	9600	11500

Tab. I

WARNING

The gas pipes leave the factory calibrated at notch 1.

The adjustment shown in Fig. 17 allows the gas pipes to be positioned in the best way for the application on which the burner is installed (e.g. boilers with flame inversion chamber).

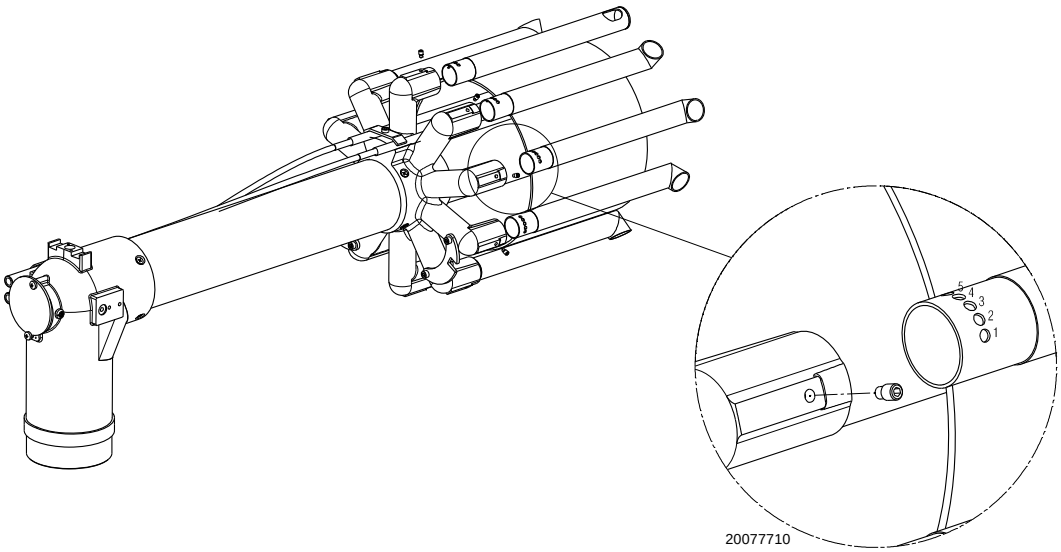

Fig. 17

5.12 Light oil supply

Explosion danger due to fuel leaks in the presence of a flammable source.

Precautions: avoid knocking, attrition, sparks and heat.

Make sure that the fuel interception tap is closed before performing any operation on the burner.

WARNING

The fuel supply line must be installed by qualified personnel, in compliance with current standards and laws.

5.12.1 Double-pipe circuit

The burner is equipped with a self-priming pump which is capable of feeding itself within the limits listed in Tab. J.

Tank higher than burner A (Fig. 18)
Distance "P" must not exceed 10 meters in order to avoid straining the pump's seal; distance "V" must not exceed 4 meters in order to allow pump self-priming even when the tank is almost empty.

Tank lower than burner B (Fig. 18)
Pump depression values higher than 0.45 bar (35 cm Hg) must not be exceeded because at higher levels gas is released from the fuel, the pump starts making noise and its working life-span decreases.
It is good practice to ensure that the return and suction lines enter the burner from the same height; in this way it will be less probable that the suction line fails to prime or stops priming.

5.12.2 Loop circuit

A loop circuit consists of a loop of piping departing from and returning to the tank with an auxiliary pump that circulates the fuel under pressure. A branch connection from the loop feeds the burner.

This circuit is extremely useful whenever the burner pump does not succeed in self-priming because the tank distance and/or height difference are higher than the values listed in Tab. J.

+/- H [m]	RLS 1000/E MX				RLS 1200/E MX			
	Ø [mm]				Ø [mm]			
	20	22	24	27	22	24	27	36
4.0	26	45	73	138	19	33	65	300
3.0	22	39	63	120	16	28	55	260
2.0	18	33	53	102	13	23	45	220
1.0	15	26	44	84	10	18	38	185
0.5	13	23	39	75	9	16	33	165
0	11	20	34	66	7	13	30	145
-4.0	-	-	-	-	-	-	-	-
-3.0	-	-	-	12	-	-	-	30
-2.0	-	7	14	30	-	-	11	70
-1.0	7	14	24	48	-	9	20	108
-0.5	9	17	29	57	5	11	25	125
0	11	20	34	66	7	13	29	145

Tab. J

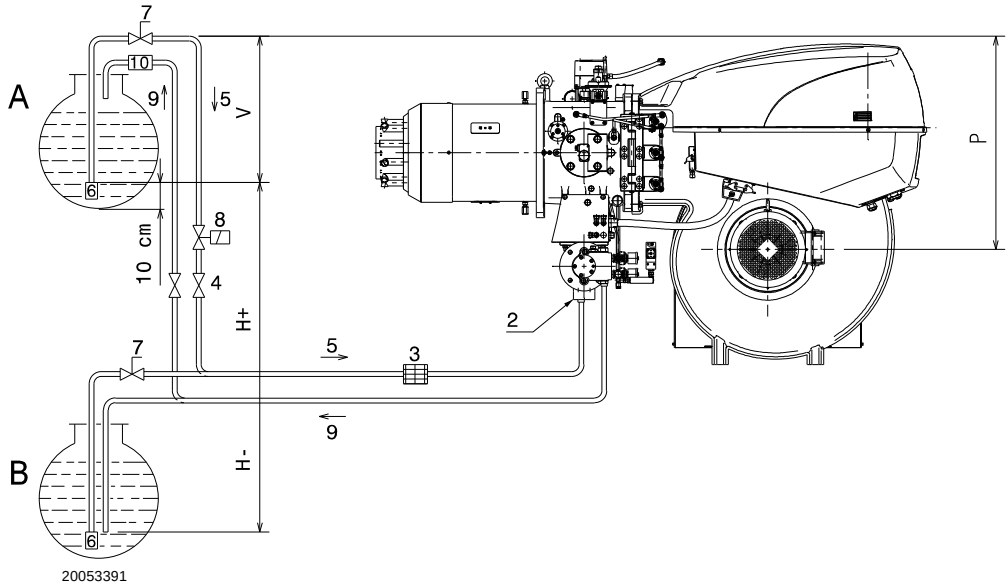

Fig. 18

Key (Fig. 18)

H = Pump/Foot valve height difference
Ø = Inside pipe diameter
1 = Burner
2 = Pump
3 = Filter
4 = Manual on/off valve
5 = Suction line
6 = Foot valve
7 = Quick closing manual valve with remote control (Italy only)
8 = On/off solenoid valve (Italy only). See electrical layout. Connections to be carried out by the installer (SV).
9 = Return line
10 = Check valve (only Italy)

5.12.3 Hydraulic connections

CAUTION

➤ Make sure that the flexible hoses to the pump supply and return line are installed correctly.

WARNING

Follow the instructions below:

➤ Tighten the flexible hoses with the supplied gaskets.

➤ Take care that the hoses are not stretched or twisted during installation.

➤ Place the pipes so that they are not crushed or are in contact with hot parts of the boiler and so it is possible to open the burner.

➤ Finally, connect the other end of the flexible hoses to the suction and return pipes.

5.12.4 Hydraulic circuit diagram

Key (Fig. 19)

1 Pump suction
2 Pump return line and nozzle return line
3 Pump pressure regulator
4 Delivery safety valve
5 Delivery safety valve
6 Nozzle delivery line
7 Nozzle without interception rod
8 Nozzle return line
9 Pressure variator on nozzle return line
10 Pressure variator servomotor
11 Pressure switch on nozzle return line
12 Safety valve on nozzle return line
13 Safety valve on nozzle return line
14 Pressure switch on pump delivery line
M Pressure gauges
V Vacuometer connection

OPERATION

Pre-purging phase:
valves 4), 5), 12) and 13) closed.

Ignition and operation phase:
valves 4), 4), 12) and 13) open.

Stop: all valves closed.

5.12.5 Pressure variator

The pressure variator (Fig. 20), incorporated in the oil circuit valve group, makes it possible to vary the pressure on the nozzle return line depending on the output required.

The pressure on the return line is adjusted by varying a section by means of the rotation of the servomotor 23)(Fig. 4), which also controls the gas butterfly valve at the same time.

➤ Regulator to 0° (maximum opening) = minimum pressure on nozzle return line.

➤ Regulator to 90° (minimum opening) = maximum pressure on nozzle return line.

The servomotor is controlled by the electronic cam 3) (Fig. 5); thanks to this device, it is possible to set different curves for oil and gas on the same servomotor (also for the air damper servomotor 4)(Fig. 4).

➤ When **adjusting the gas**, it is recommended to adjust the servomotor to about 90° to reduce leaks from the gas butterfly valve.

➤ When **adjusting the oil**, the adjustment is done based on the nozzle fitted and on the required degree of modulation; in a situation of minimum firing rate, a rotation of 20° can be enough.

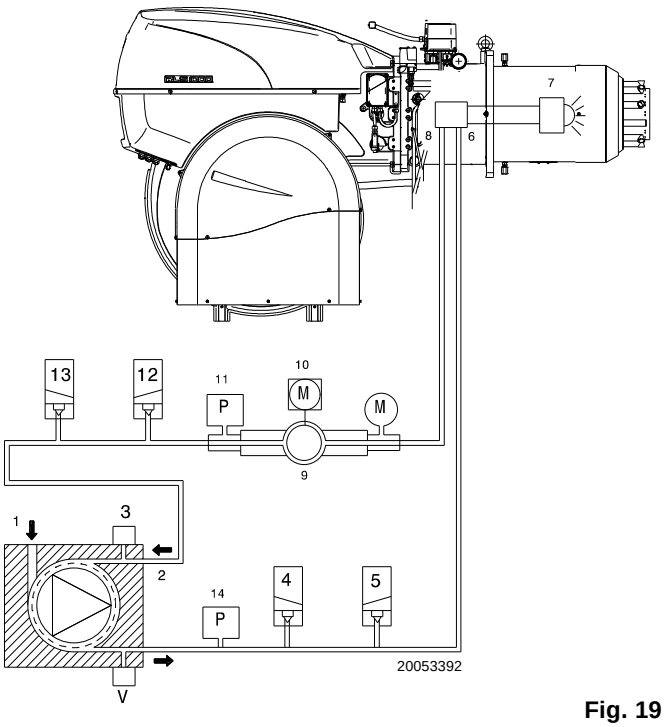

Fig. 19

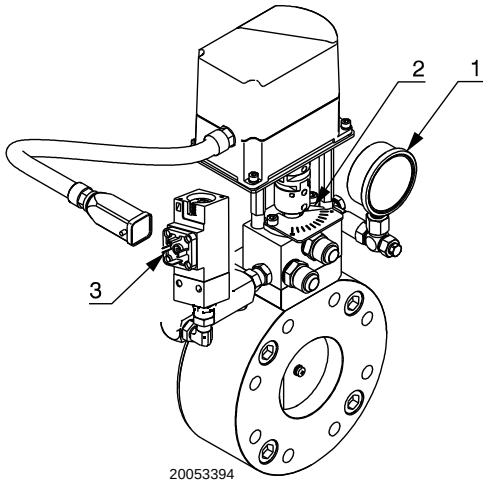

Fig. 20

Key (Fig. 20)

15 Nozzle return pressure gauge
16 Position indicator (0 ÷ 90) of the pressure variator
17 Maximum oil pressure switch on return circuit

5.13 Pump

5.13.1 Technical data

Pump	RLS 1000/E MX VBHRG	RLS 1200/E MX VBHGRP
Min. delivery rate at 40 bar pressure	1160 kg/h	1660 kg/h
Delivery pressure range	9 - 40 bar	9 - 40 bar
Max. suction depression	0.6 bar	0.6 bar
Viscosity range	6 - 800 cSt	6 - 800 cSt
Max. light oil temperature	140°C	140°C
Max. suction and return pressure	5 bar	5 bar
Pressure calibration in the factory	22 bar	22 bar

Tab. K

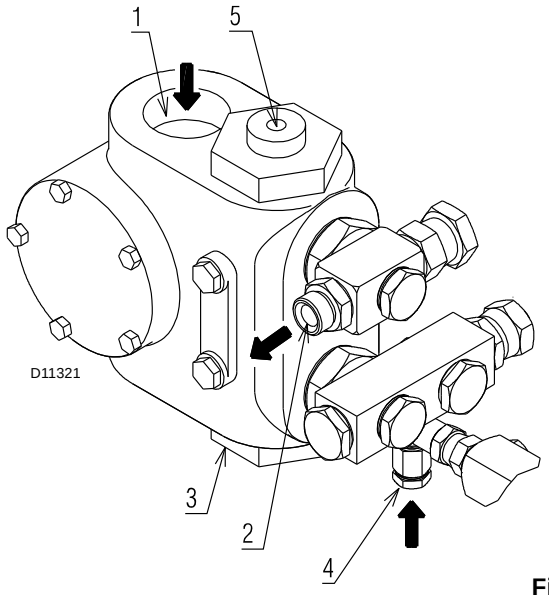

Fig. 21

Key (Fig. 21)
1 Suction line G 3/4” (RLS 1000/E)
1 G 1” 1/2 (RLS 1200/E)
2 Return line G 1”
3 Vacuometer connection G 1/4”
4 Gauge connectionG 1/4”
5 Pressure adjuster

5.13.2 Priming pump

WARNING

Before starting the burner, make sure that the tank return line is not clogged.

Obstructions in the line could cause the sealing organ located on the pump shaft to break.

- ➤ In order for self-priming to take place, the screw 4) on the pump (Fig. 21) must be loosened to bleed off the air contained in the suction line.
- ➤ Start the burner by closing the remote controls. As soon as the burner starts, check the direction of rotation of the fan blade.
- ➤ The pump can be considered to be primed when the light oil starts coming out of the screw 4).
- ➤ Close the burner and undo the screws 4).

The time required for this operation depends upon the diameter and length of the suction tubing.
If the pump fails to prime at first start-up and the burner locks out, wait approx. 15 seconds, reset the burner, and then repeat the start-up operation. And so on.
After 5 or 6 starting operations allow 2 or 3 minutes for the transformer to cool.

Do not illuminate the QRI cell or the burner will lock out; the burner should lock out anyway about 10 seconds after it starts.

WARNING

The a.m. operation is possible because the pump is already full of fuel when it leaves the factory.

If the pump has been drained, fill it with fuel through the opening on the vacuometer 4)(Fig. 21) prior to starting; otherwise, the pump will seize.

Whenever the length of the suction piping exceeds 20-30 meters, the supply line must be filled using a separate pump.

5.14 Gas feeding

Explosion danger due to fuel leaks in the presence of a flammable source.

Precautions: avoid knocking, attrition, sparks and heat.

Make sure that the fuel interception tap is closed before performing any operation on the burner.

WARNING

The fuel supply line must be installed by qualified personnel, in compliance with current standards and laws.

5.14.1 Gas feeding line

Key (Fig. 22 - Fig. 23 - Fig. 24 - Fig. 25)

1 Gas input pipe
2 Manual valve
3 Vibration damping joint
4 Pressure gauge with pushbutton cock
5 Filter
6A Includes:
– filter
– working valve
– safety valve
– pressure adjuster
6B Includes
– working valve
– safety valve
– pressure adjuster
6C Includes
– safety valve
– working valve
6D Includes:
– safety valve
– working valve
7 Minimum gas pressure switch
8 Leak detection control, provided as an accessory or integrated, based on the gas train code. In compliance with the EN 676 standard, the leak detection control is compulsory for burners with maximum outputs over 1200 kW.
9 Gasket, for "flanged" versions only
10 Pressure adjuster
11 Train-Burner adaptor, supplied separately
P2 Upline pressure of valves/adjuster
P3 Upstream pressure of the filter
L Gas train, supplied separately
L1 The responsibility of the installer

MBC “threaded”

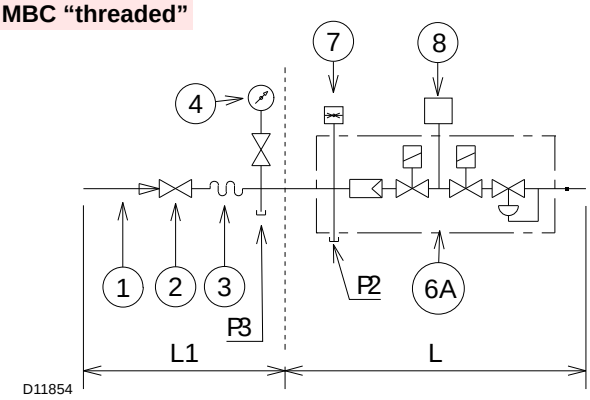

Fig. 22

MBC “flanged”

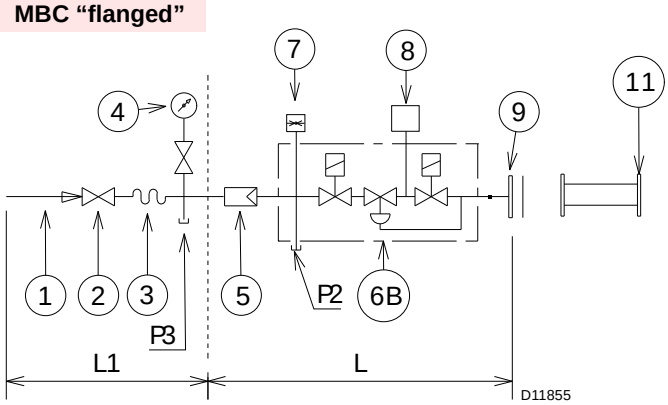

Fig. 23

DMV “flanged or threaded”

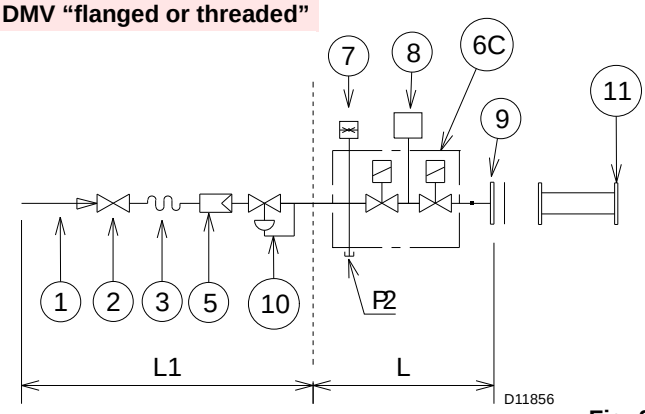

Fig. 24

CB “flanged or threaded”

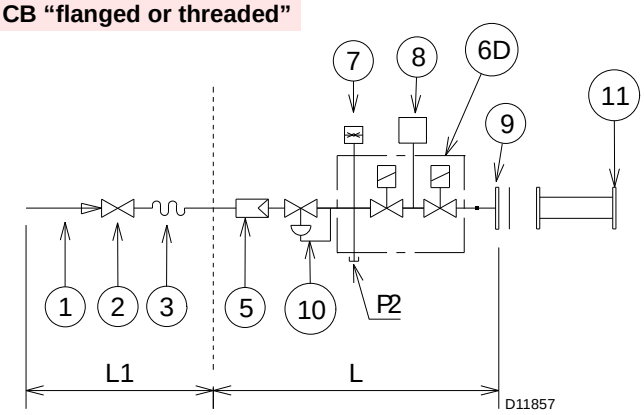

Fig. 25

5.14.2 Gas train

Approved according to standard EN 676 and provided separately from the burner.

To select the correct gas train model, refer to the supplied "Burner-gas train combination" manual.

5.14.3 Gas train installation

Disconnect the electrical power using the main system switch.

Check that there are no gas leaks.

Beware of train movements: danger of crushing of limbs.

Make sure that the gas train is properly installed by checking for any fuel leaks.

The operator must use appropriate tools for installation.

The gas train is prearranged to be connected to the burner by the flange 1) (Fig. 26).

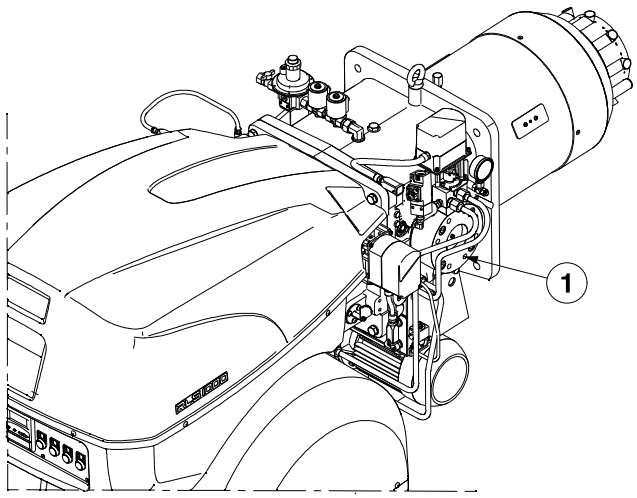

Fig. 26

5.14.4 Gas pressure

The Tab. L indicates the pressure drop of the combustion head and the gas butterfly valve depending on the operating output of the burner.

	kW	1 Δp (mbar)		2 Δp (mbar)	
		G 20	G 25	G 20	G 25
RLS 1000/E MX	3750	9.2	13.7	1.0	1.4
	4000	10.8	16.0	1.1	1.6
	4500	13.9	20.7	1.4	2.1
	5000	17.0	25.4	1.7	2.5
	5500	20.2	30.1	2.1	3.1
	6000	23.3	34.8	2.4	3.7
	6500	26.4	39.4	2.9	4.3
	7000	30.4	45.3	3.3	5.0
	7500	34.8	51.9	3.8	5.7
	8000	39.2	58.5	4.4	6.5
	8500	43.6	65.1	4.9	7.3
	9000	49.2	73.3	5.5	8.2
	9500	55.0	82.0	6.1	9.2
	10000	60.8	90.7	6.8	10.1
	10600	67.8	101.1	7.6	11.4
RLS 1200/E MX	5500	23.1	34.5	2.1	3.1
	6000	27.9	41.6	2.4	3.7
	6500	32.6	48.7	2.9	4.3
	7000	37.4	55.7	3.3	5.0
	7500	42.1	62.8	3.8	5.7
	8000	48.3	72.1	4.4	6.5
	8500	54.5	81.3	4.9	7.3
	9000	60.7	90.6	5.5	8.2
	9500	67.0	99.8	6.1	9.2
	10000	74.3	110.8	6.8	10.2
	10500	81.9	122.2	7.5	11.2
	11000	89.6	133.6	8.2	12.3
	11500	97.2	145.0	9.0	13.4

Tab. L

The values shown in Tab. L refer to:
– Natural gas G 20 NCV 9.45 kWh/Sm^3 (8.2 Mcal/Sm^3)
– Natural gas G 25 NCV 8.13 kWh/Sm^3 (7.0 Mcal/Sm^3)

Column 1

Pressure loss at combustion head.
Gas pressure measured at test point 1)(Fig. 27), with:
- combustion chamber at 0 mbar;
- burner working at maximum modulating output;
- combustion head set as in pag. 20.

Column 2

Pressure loss at gas butterfly valve 2)(Fig. 27) with maximum opening: 90°.

Calculate the approximate output of the burner thus:
– Subtract the combustion chamber pressure from the gas pressure measured at test point 1) (Fig. 27).
– Find, in the table Tab. L related to the burner concerned, the pressure value closest to the result of the subtraction.
– Read off the corresponding output on the left.

Example RLS 1000/E MX with natural gas G20:
Operation at maximum modulating output

Gas pressure at test point 1)(Fig. 27)	=	44.2 mbar
Pressure in combustion chamber	=	5 mbar
44.2 - 5	=	39.2 mbar

A pressure of 39.2 mbar, column 1, corresponds in Tab. L to an output of 8000 kW.

This value serves as a rough guide; the effective output must be measured at the gas meter.

To calculate the required gas pressure at test point 1) (Fig. 27), set the maximum modulating output required from the burner operation:
– find the nearest output value in the table Tab. L for the burner in question.
– read, on the right (column 1), the pressure at the test point 1) (Fig. 27).
– Add this value to the estimated pressure in the combustion chamber.

Example RLS 1000/E MX with natural gas G20:
Operation at maximum modulating output

Gas pressure at an output of 8000 kW	=	39.2 mbar
Pressure in combustion chamber	=	5 mbar
39.2 + 5	=	44.2 mbar

pressure required at test point 1)(Fig. 27).

5.14.5 Pilot - gas train connection

The burner is fitted with a dedicated gas train that is fixed to the pipe coupling.
➤ It should be connected to the main train downstream the filter or the pressure regulator (depending on configuration).

WARNING Supply pressure 68 ÷ 500 mbar

5.14.6 Ignition pilot burner

For proper operation, adjust gas pressure (measured at pressure test point 1)(Fig. 28) as follows:

Model	Gas	mbar	Sm³/h
RLS 1000/E MX	G20	1.5	12.3
	G31	1.4	3.2
RLS 1200/E MX	G20	40	14.3
	G31	30	7.1

Tab. M

WARNING Check pilot flame stability before starting up the main burner.

In the case of ignition problems check:
➤ correct positioning of the ignition electrode;
➤ the gas pressure, according to indications.

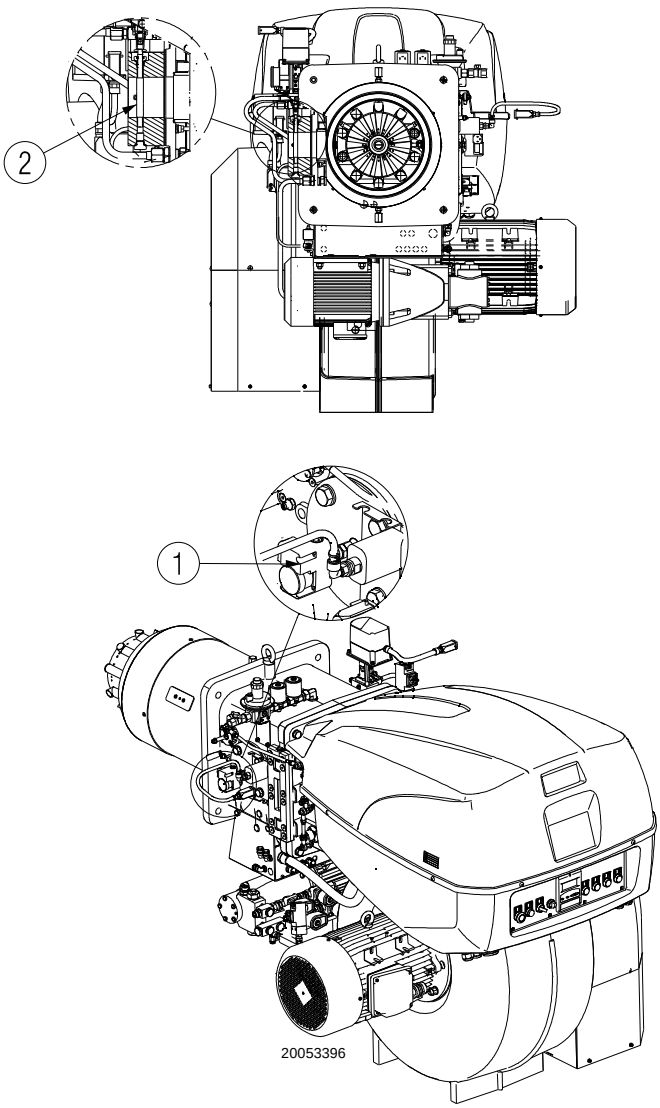

Fig. 27

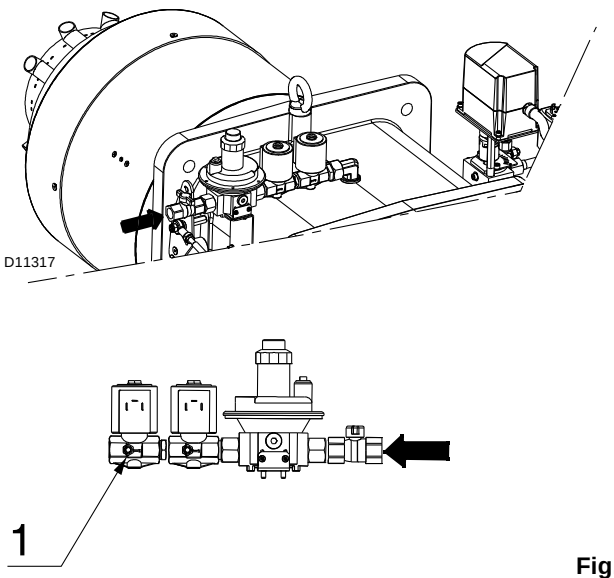

Fig. 28

5.15 Activation of the burner lance

The burner is equipped with a spray lance for light oil.
Fig. 29 shows the 3-way valve used for the mechanical activation of the burner lance and the point at which the compressed air input A) must be connected.
It must operate at 6 - 7 bar.

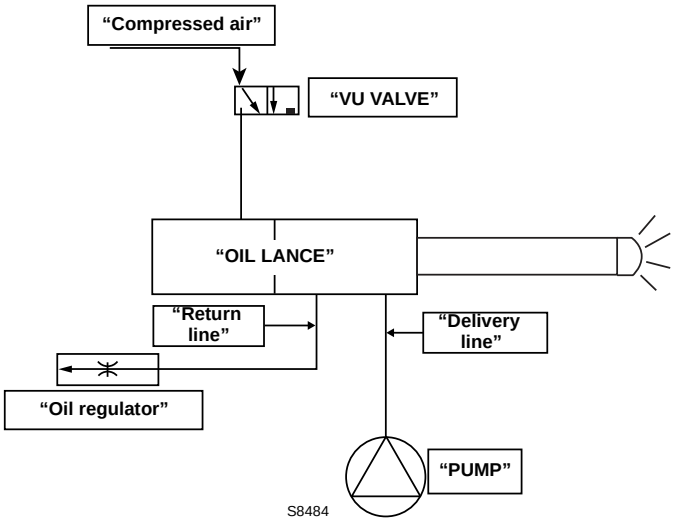

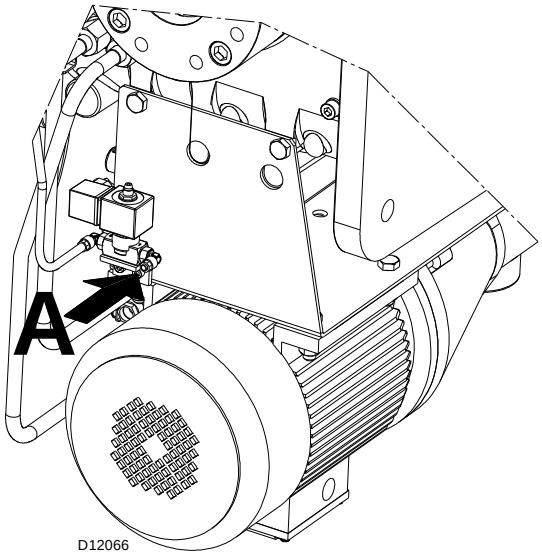

Fig. 29

5.16 Electrical connections

Notes on safety for the electrical wiring

DANGER

- ➤ The electrical wiring must be carried out with the electrical supply disconnected.
- ➤ Electrical wiring must be made in accordance with the regulations currently in force in the country of destination and by qualified personnel. Refer to the wiring diagrams.
- ➤ The manufacturer declines all responsibility for modifications or connections different from those shown in the wiring diagrams
- ➤ Check that the electrical supply of the burner corresponds to that shown on the identification label and in this manual.
- ➤ The burner has been type-approved for intermittent use (FS1).
  This means they should compulsorily be stopped at least once every 24 hours to enable the control box to perform checks of its own start-up efficiency. Normally, burner stopping is guaranteed by the boiler's thermostat/pressure switch. If this is not the case, a time switch should be fitted in series to TL to stop the burner at least once every 24 hours. Refer to the wiring diagrams.
- ➤ The burner is factory set for FS1 operation (1 stop every 24 hours); it can be converted to FS2 operation (continuous - 1 stop every 72 hours), by changing the parameters using the menu of the AZL Display.
- ➤ The electrical safety of the device is obtained only when it is correctly connected to an efficient earthing system, made according to current standards. It is necessary to check this fundamental safety requirement. In the event of doubt, have the electrical system checked by qualified personnel. Do not use the gas tubes as an earthing system for electrical devices.
- ➤ The electrical system must be suitable for the maximum power absorption of the device, as indicated on the label and in the manual, checking in particular that the section of the cables is suitable for that level of power absorption.
- ➤ For the main power supply of the device from the electricity mains:
  - do not use adapters, multiple sockets or extensions;
  - use a multiple pole switch with at least a 3 mm gap between the contacts (overvoltage category III), as envisaged by the present safety standards.
- ➤ Do not touch the device with wet or damp body parts and/or in bare feet.
- ➤ Do not pull the electric cables.

Before carrying out any maintenance, cleaning or checking operations:

DANGER

Disconnect the electrical supply from the burner by means of the main system switch.

DANGER

Close the fuel interception tap.

DANGER

Avoid condensate, ice and water leaks from forming.

If the hood is still present, remove it and proceed with the electrical wiring according to the wiring diagrams.

Use flexible cables in compliance with the EN 60 335-1 standard.

5.16.1 Supply cables and external connections passage

All the cables to be connected to the burner should be passed through cable grommets, as shown in Fig. 30.

WARNING

To guarantee the protection level of the burner, it is necessary to close any holes that are still free, using the plugs supplied.

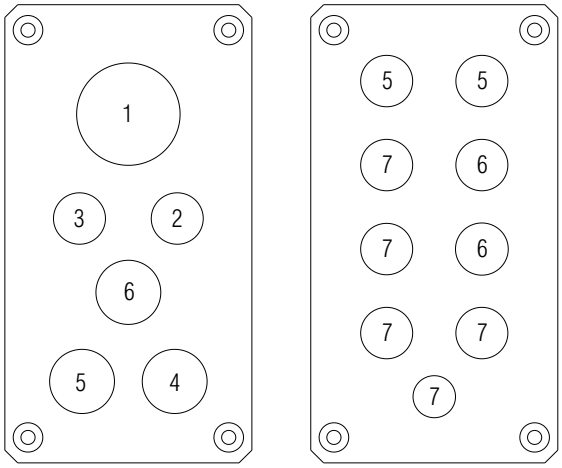

Fig. 30

Key (Fig. 30)
1 Electrical supply
2 Minimum gas pressure switch
3 Pressure switch for VPS gas valve leak detection
4 Gas train
5 Consents/Safety
6 Available
7 Plug

After carrying out maintenance, cleaning or checking operations, reassemble the hood and all the safety and protection devices of the burner.

5.17 Calibration of the thermal relay

The thermal relay (Fig. 31) serves to avoid damage to the motor due to an excessive absorption increase or if a phase is missing.

For calibration 2), refer to the table indicated in the electrical layout (electrical wiring in charge of the installer).

To reset, in case of an intervention of the thermal relay, press button "RESET" 1).

The button “STOP” 3) opens the NC contact (95-96) and stops the motor.

Insert a screwdriver in the window “TEST/TRIP” 4) and move it in the arrow direction (to the right) to carry out the thermal relay test.

WARNING

The automatic reset can be dangerous.

This operation is not foreseen in the burner operation.

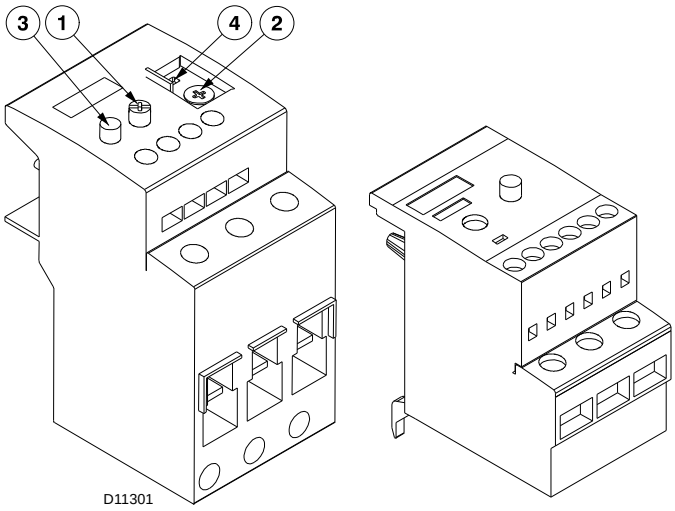

Fig. 31

6 Start-up, calibration and operation of the burner

6.1 Notes on safety for the first start-up

WARNING

The first start-up of the burner must be carried out by qualified personnel, as indicated in this manual and in compliance with the standards and regulations of the laws in force.

WARNING

Check the correct working of the adjustment, command and safety devices.

6.2 Adjustments prior to ignition (light oil)

WARNING

It is recommended to adjust first the light oil burner and then the gas burner.

Carry out the fuel change with burner off.

The optimum calibration of the burner requires an analysis of the flue gases at the boiler outlet and interventions on the following points.

6.2.1 Nozzle

See information on pag. 19.

6.2.2 Combustion head

The adjustment of the combustion head already carried out on pag. 20 need not be altered unless the 2nd stage delivery of the burner is changed.

6.2.3 Pump pressure

In order to change pump pressure, act on screw 5) (Fig. 21). See information on pag. 19.

6.3 Burner ignition (light oil)

Position the selector 1)(Fig. 32) in “**AUTO**”.

Position the selector 2) in “**OIL**” to select light oil fuel.

When the limit thermostat (TL) is closed, the “**HEAT REQUEST**” 3) signal must be switched on.

At first ignition, there is a momentary drop in fuel pressure due to the filling of the nozzle piping. This lowering of the fuel pressure can cause the burner to lockout and can sometimes give rise to pulsations.

Once the following adjustments have been made, the ignition of the burner must generate a noise similar to the noise generated during operation.

If a burner lockout occurs, refer to the “Release procedure” given in the equipment manual supplied.

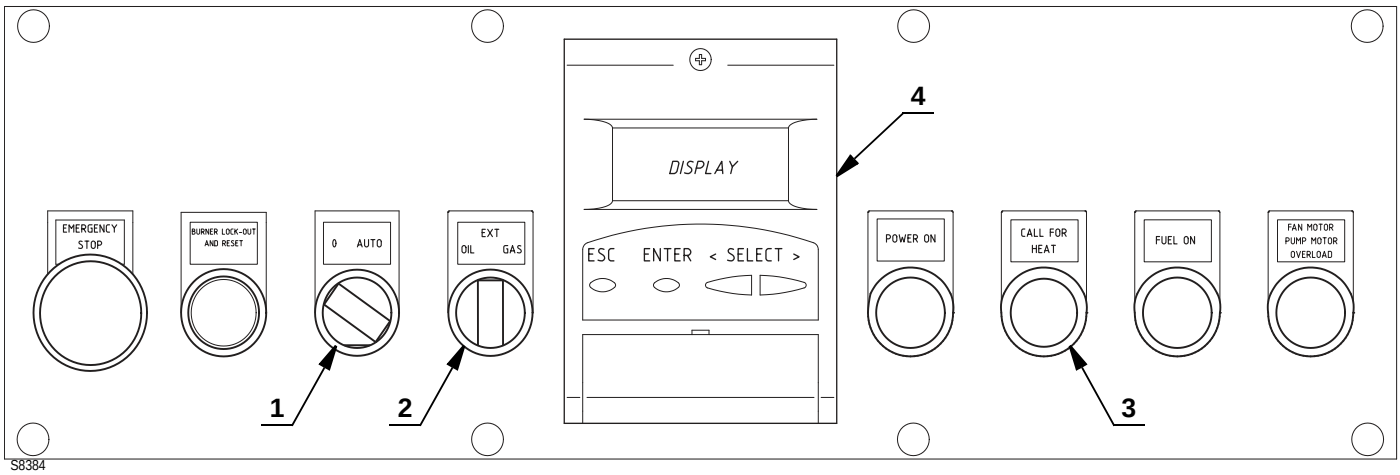

Fig. 32

6.4 Adjustments prior to ignition (gas)

In addition, the following adjustments must also be made:

- ➤ Slowly open the manual valves situated upstream from the gas train.
- ➤ Adjust the minimum gas pressure switch (Fig. 37) to the start of the scale.
- ➤ Adjust the maximum gas pressure switch (Fig. 36) to the end of the scale.
- ➤ Adjust the air pressure switch (Fig. 35) to the start of the scale.
- ➤ Purge the air from the gas line.
  We recommend using a plastic tube routed outside the building and to purge air until gas is smelt.
- ➤ Fit a U-type pressure gauge or a differential pressure gauge (Fig. 33), with socket (+) on the gas pressure of the pipe coupling and (-) in the combustion chamber.
  The manometer readings are used to calculate MAX burner output.
- ➤ Connect two lamps or testers to the two gas line solenoids to check the exact moment in which voltage is supplied.
  This operation is unnecessary if each of the two solenoid valves is equipped with a pilot light that signals voltage passing through.

CAUTION

Before starting up the burner, it is good practice to adjust the gas train so that ignition takes place in conditions of maximum safety, i.e. with gas delivery at the minimum.

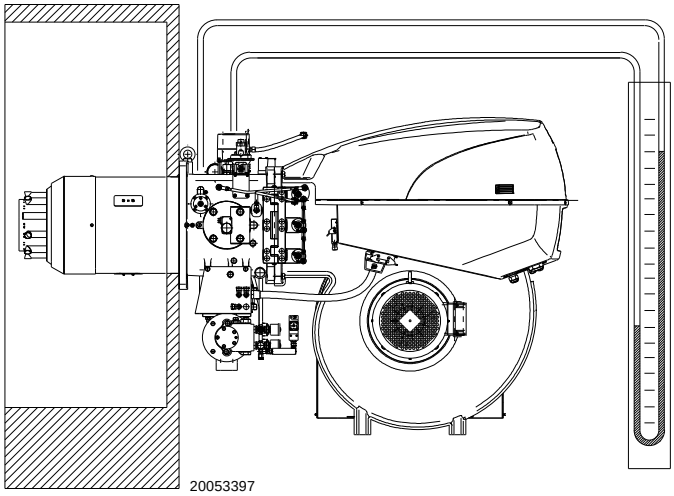

Fig. 33

6.5 Burner start-up (gas)

Close the remote controls and position the selector 1)(Fig. 32) to "**AUTO**".

Position the selector 2) to "**GAS**" to select gas as fuel.

Make sure that the lights or testers connected to the solenoids, or the pilot lights on the solenoids themselves, indicate that no voltage is present. If voltage is present, stop the burner immediately and check the electrical connections.

When the limit thermostat (TL) closes, the "**CALL FOR HEAT**" 3) signal must come on. The burner will subsequently begin its starting cycle.

6.6 Check motor rotation

WARNING

As soon as the burner starts up, go in front of the fan motor cooling fan and check it is rotating anti-clockwise (Fig. 34).

If this is not the case:

- ➤ turn the burner switch to position "0" (OFF) and wait for the control box to carry out the switch-off phase;
- ➤ disconnect the power supply to the main panel;
- ➤ invert the phases on the three-phase power supply;
- ➤ if necessary, carry out the same operation for the pump motor.

DANGER

This operation must be carried out with the electrical supply disconnected.

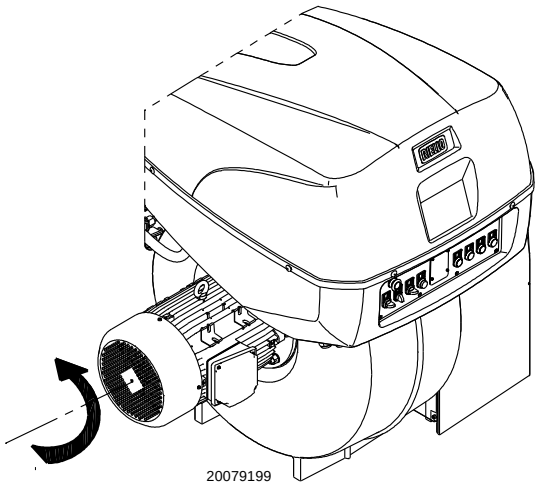

Fig. 34

6.7 Burner ignition

The burner should light after having performed the above steps.

If the motor starts up, but the flame does not appear and the control box goes into lockout, reset it and wait for a new ignition attempt.

If ignition is still not achieved, it may be that gas is not reaching the combustion head within the safety time period of 3 seconds. In this case increase gas ignition delivery.

The arrival of gas at the sleeve is indicated by the U-type manometer (Fig. 33).

If further burner lockouts occur, refer to the "Release procedure" given in the equipment manual supplied.

WARNING

In the event of a burner lockout, more than two consecutive burner reset operations could cause damage to the installation. On the third lockout, contact the Aftersales Service.

DANGER

If further lockouts or burner faults occur, interventions must only be made by qualified, authorised personnel (as indicated in this manual, and in compliance with the laws and regulations currently in force).

Once the burner has fired, now proceed with global calibration operations.

6.8 Change of fuel

There are three options of change of fuel:
1 with the AZL device 4)(Fig. 32);
2 with selector 2);
3 with a remote selector connected to the main terminal board.

The AZL device sets the priority fuel; the display shows the selected fuel.

Positioning the selector 2)(Fig. 32) to “EXT” activates the remote selection of the fuel. In this position, if there is no remote selector, the display shows the priority fuel.

6.9 Combustion air adjustment

Fuel/combustion air synchronisation is done with the relevant servomotors (air and gas) by logging a calibration curve by means of the electronic cam.

It is advisable, to reduce the loss and for a wide calibration field, to adjust the servomotors to the maximum of the output used, the nearest possible to the maximum opening (90°).

On the gas butterfly valve, fuel step according to the burner output required, with servomotor completely open, is carried out by the pressure stabiliser placed on the gas train.

The values indicated in Tab. N and Tab. O can be a reference for a good combustion calibration.

EN 676		Air excess		CO
		Max. output $\lambda \leq 1.2$	Max. output $\lambda \leq 1.3$	
GAS	Theoretical max. CO_2 0 % O_2	CO_2 % Calibration		mg/kWh
		$\lambda = 1.2$	$\lambda = 1.3$	
G 20	11.7	9.7	9	≤ 1000
G 25	11.5	9.5	8.8	≤ 1000
G 30	14.0	11.6	10.7	≤ 1000
G 31	13.7	11.4	10.5	≤ 1000

Tab. N

EN 267	Air excess		CO
	Max. output $\lambda \leq 1.2$	Min. output $\lambda \leq 1.3$	
Theoretical max. CO_2 0 % O_2	CO_2 % Calibration		mg/kWh
	$\lambda = 1.2$	$\lambda = 1.3$	
15.2	12.6	11.5	≤ 1000

Tab. O

6.9.1 Air / gas adjustment and output modulation

The air/gas adjustment and output modulation system with which the **RLS** range burners are equipped carries out a series of integrated functions in order to optimise burner functioning, both for single operation and together with other units (e.g. double furnace boiler or more than one generator in parallel).

The basic system functions control:
1 The dosage of the air and fuel through positioning using direct servocommands of the relevant valves eliminating the possible play in the calibration systems with mechanical cam lever mechanisms, used on traditional modulating burners.
2 The modulation of the burner output in accordance with the load required by the system, with maintenance of the pressure or temperature of the boiler at the operating values set.
3 The sequence (cascade adjustment) of more than one boiler through the suitable connection of the various units and the activation of the internal software of the individual systems (option).

Further interfaces and communication functions with computers, for remote control or integration in central supervision systems are available on the basis of the configuration of the system.

WARNING

The first start up and every further internal setting operation of the adjustment system or the expansion of the base functions require access by means of password and are to be carried out by service personnel who are especially trained for the internal programming of the instrument and the specific application created with this burner.

The first start-up and curve synchronisation manual is supplied with the burner.

At request, the complete manual for the control and setting of all parameters is available.

6.10 Pressure switch adjustment

6.10.1 Air pressure switch - check CO

Adjust the air pressure switch after performing all other burner adjustments with the air pressure switch set to the start of the scale (Fig. 35).

With the burner working at MIN output, insert a combustion analyser in the stack, slowly close the suction inlet of the fan (for example, with a piece of cardboard) until the CO value does not exceed 100 ppm.

Slowly turn the appropriate knob clockwise until the burner goes into lockout.

Check the indication of the arrow pointing upwards on the graduated scale.

Turn the knob clockwise again, until the value shown on the graduated scale corresponds with the arrow pointing downwards, and so recovering the hysteresis of the pressure switch (shown by the white mark on a blue background, between the two arrows). Now check the correct start-up of the burner.

If the burner locks out again, turn the knob anticlockwise a little bit more.

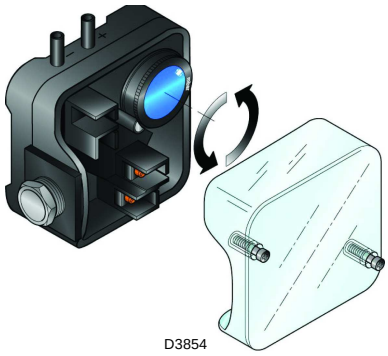

Fig. 35

6.10.2 Maximum gas pressure switch

Adjust the maximum gas pressure switch after having performed all the other burner adjustments with the maximum gas pressure switch set at the end of the scale (Fig. 36).

With the burner operating at maximum output, lower the adjustment pressure by slowly turning the relative knob anticlockwise until the burner locks out.

Now turn the knob clockwise by 0,2 kPa (2 mbar) and repeat the start-up of the burner.

If the burner locks out again, turn the knob clockwise again by 0,1 kPa (1 mbar).

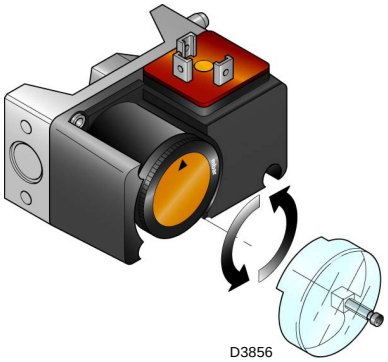

Fig. 36

6.10.3 Minimum gas pressure switch

Adjust the minimum gas pressure switch after performing all the other burner adjustments with the pressure switch set to the start of the scale (Fig. 37).

With the burner operating at maximum output, increase adjustment pressure by slowly turning the relative knob clockwise until the burner stops.

Now turn the knob anticlockwise by 0,2 kPa (2 mbar) and repeat burner start-up to ensure it is uniform.

If the burner locks out again, turn the knob anti-clockwise again by 0,1 kPa (1 mbar).

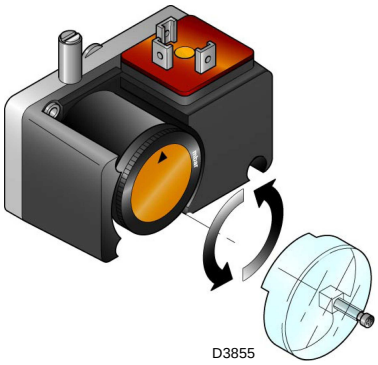

Fig. 37

6.10.4 PVP pressure switch kit

Adjust the pressure switch for the leak detection control (PVP kit) (Fig. 38) according to the instructions supplied with the kit.

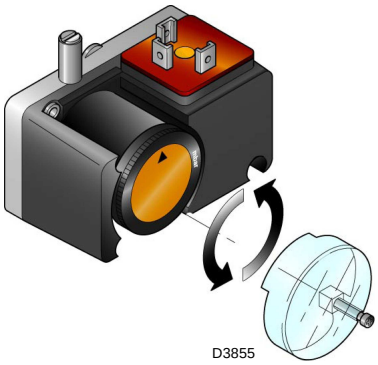

Fig. 38

WARNING

1 kPa = 10 mbar

6.10.5 Oil pressure switch

Check the calibration of the maximum and minimum oil pressure switches, using the adjustment screw as shown in Fig. 39.

The check should be carried out by individually varying the calibration of each pressure switch.

Maximum oil pressure switch
Turning the screw anti-clockwise lowers the setting and the burner should go into lockout.
Once this control has been carried out, it is necessary to reset the factory setting of the maximum oil pressure switch to about 4/5 bar.

Minimum oil pressure switch
Turning the screw clockwise increases the setting and the burner should not start.
Once this control has been carried out, it is necessary to reset the factory setting of the minimum oil pressure switch to about 16/18 bar.

Any other pressure values should be adjusted to the burner output.

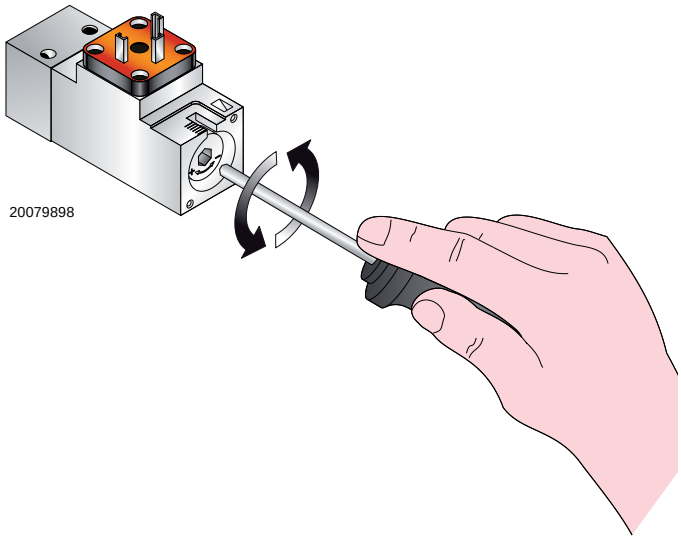

Fig. 39

6.11 Final checks (with burner operating)

➤ Open the thermostat/pressure switch TL ➤ Open the thermostat/pressure switch TS	⇨	The burner must stop
➤ Turn the gas maximum pressure switch knob to the minimum end of scale position ➤ Turn the air pressure switch to the maximum end of scale position	⇨	The burner must stop in lockout
➤ Check the maximum oil pressure switch ➤ Check the minimum oil pressure switch	⇨	The burner must stop in lockout
➤ Turn off the burner and cut off the power ➤ Disconnect the minimum gas pressure switch connector	⇨	The burner must not start
➤ Disconnect the QRI cell wire	⇨	The burner must stop in lockout due to ignition failure

Tab. P

WARNING

Make sure that the mechanical locking systems on the various adjustment devices are fully tightened.

7 Maintenance

7.1 Notes on safety for the maintenance

The periodic maintenance is essential for the good operation, safety, yield and duration of the burner.

It allows you to reduce consumption and polluting emissions and to keep the product in a reliable state over time.

DANGER

The maintenance interventions and the calibration of the burner must only be carried out by qualified, authorised personnel, in accordance with the contents of this manual and in compliance with the standards and regulations of current laws.

Before carrying out any maintenance, cleaning or checking operations:

DANGER

Disconnect the electrical supply from the burner by means of the main system switch.

DANGER

Close the fuel interception tap.

Wait for the components in contact with heat sources to cool down completely.

7.2 Maintenance programme

7.2.1 Maintenance frequency

The gas combustion system should be checked at least once a year by a representative of the manufacturer or another specialised technician.

7.2.2 Checking and cleaning

The operator must use the required equipment during maintenance.

Combustion
Carry out an analysis of the combustion discharge gases.
Significant differences with respect to the previous check indicate the points where more care should be exercised during maintenance.

Combustion head
Open the burner and make sure that all components of the combustion head are in good condition, not deformed by the high temperatures, free of impurities from the surroundings and correctly positioned.

Voltage on the QRI cell

Minimum value for correct operation: 3.5 Vdc (value on AZL display at about 50%).

If the value is lower, it could be due to:
- cell not positioned correctly
- low voltage (lower than 187 V)
- bad regulation of the burner

In order to measure, use a voltmeter with a 10 Vdc scale connected as in the diagram (Fig. 40).

If rust or other impurities are observed inside the pump, use a separate pump to lift any water and other impurities that may

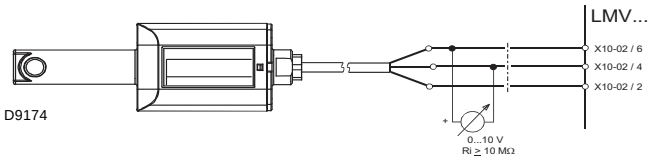

Fig. 40

Burner
Clean the outside of the burner.

Fan
Check to make sure that no dust has accumulated inside the fan or on its blades, as this condition will cause a reduction in the air flow rate and provoke polluting combustion.

Boiler
Clean the boiler as indicated in its accompanying instructions in order to maintain all the original combustion characteristics intact, especially the flue gas temperature and combustion chamber pressure.

GAS OIL OPERATION

Pump
The delivery pressure must comply with Tab. H, a pag. 19.
The depression must be less than 0.45 bar.
Unusual noise must not be evident during pump operation.
If the pressure is found to be unstable or if the pump runs noisily, the flexible hose must be detached from the line filter and the fuel must be sucked from a tank located near the burner.
This measure permits the cause of the anomaly to be traced to either the suction piping or the pump.
If the problem lies in the suction line, check the filter is clean and that air is not entering the piping.

Filters (Fig. 41)
Check the filtering baskets on line 1) and at nozzle 2) present in the system.
Clean or replace if necessary.
have deposited on the bottom of the tank.

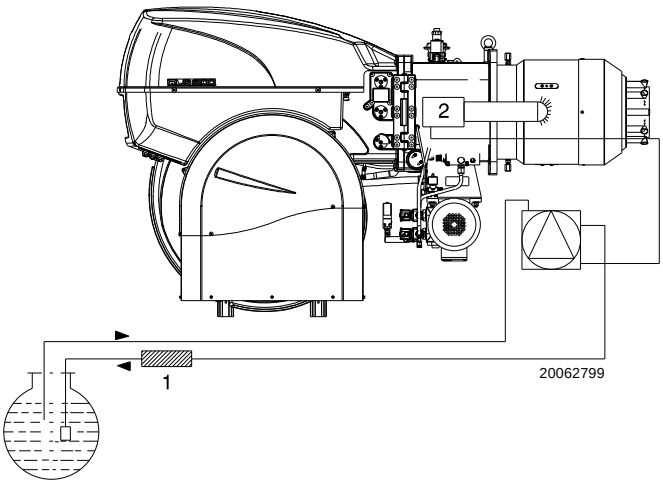

Fig. 41

Nozzles
It is advisable to replace nozzles once a year during periodical maintenance.
Do not clean the nozzle openings;

Hoses
Check that these are in good conditions.

Fuel tank
Approximately every 5 years, suck any water on the bottom of the tank using a separate pump.

Combustion
If the combustion values found at the start of the intervention do not satisfy current standards or anyway indicate a poor state of combustion (consult the table below), contact the Technical Assistance Service for the necessary adjustments.

EN 267	Air excess		CO
	Max. output $\lambda \leq 1.2$	Min. output $\lambda \leq 1.3$	
Theoretical max. CO_2 0 % O_2	CO_2 % Calibration		mg/kWh
	$\lambda = 1.2$	$\lambda = 1.3$	
15.2	12.6	11.5	≤ 1000

Tab. Q

GAS OPERATION

Gas leaks
Make sure that there are no gas leaks on the pipework between the gas meter and the burner.

Gas filter
Change the gas filter when it is dirty.

Combustion
If the combustion values found at the start of the intervention do not satisfy current standards or anyway indicate a poor state of combustion (consult the table below), contact the Technical Assistance Service for the necessary adjustments.

EN 676		Air excess		CO
		Max. output $\lambda \leq 1.2$	Max. output $\lambda \leq 1.3$	
GAS	Theoretical max. CO_2 0 % O_2	CO_2 % Calibration		mg/kWh
		$\lambda = 1.2$	$\lambda = 1.3$	
G 20	11.7	9.7	9	≤ 1000
G 25	11.5	9.5	8.8	≤ 1000
G 30	14.0	11.6	10.7	≤ 1000
G 31	13.7	11.4	10.5	≤ 1000

Tab. R

7.3 Opening the burner

DANGER

Disconnect the electrical supply from the burner by means of the main system switch.

DANGER

Close the fuel interception tap.

Wait for the components in contact with heat sources to cool down completely.

- ➤ Disconnect the derivation unit socket and the QRI photocell;
- ➤ disconnect the electrode cable;
- ➤ remove the tie-rod 1)(Fig. 42) of the head movement lever, undoing the nut 2);
- ➤ disconnect the socket 4) of the fuel servomotor;
- ➤ remove the screws 5).
- ➤ At this point, it is possible to open the burner on the hinge.

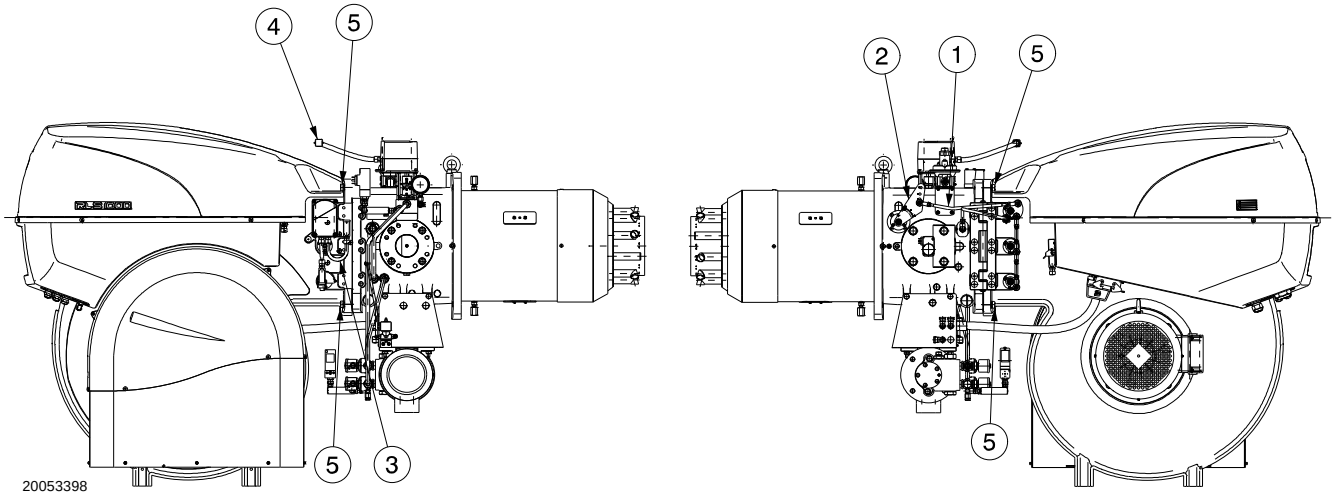

Fig. 42

7.4 Closing the burner

Refit following the steps described but in reverse order; refit all burner components as they were originally assembled.

After carrying out maintenance, cleaning or checking operations, reassemble the hood and all the safety and protection devices of the burner.

8 Faults - Possible causes - Solutions

If faults arise in ignition or operations, the burner performs a "safety stop", which is signalled by the red burner lockout LED.

The display visualises alternately the lockout code and the relative diagnostic. To reset the start-up conditions, refer to the “Reset procedure” indicated in the control box manual supplied.

When the burner starts again, the red LED goes out and the control box is reset.

WARNING

In the event of a burner lockout, more than two consecutive burner reset operations could cause damage to the installation. On the third lockout, contact the Aftersales Service.

DANGER

If further lockouts or burner faults occur, interventions must only be made by qualified, authorised personnel (as indicated in this manual, and in compliance with the laws and regulations currently in force).

A Appendix - Accessories

Software interface kit

Burner	Code
RLS 1000/E MX RLS 1200/E MX	3010388

Soundproofing box kit

Burner	Code
RLS 1000/E MX RLS 1200/E MX	3010401

AZL kit (display and operating unit) (Russia only)

Burner	Code
RLS 1000/E MX RLS 1200/E MX	3010469

Pressure switch kit for leak detection control (supplied as standard)

Burner	Code
RLS 1000/E MX RLS 1200/E MX	3010344

Probe for checking temperature/pressure

Parameter to be checked		Probe	
	Adjustment field	Type	Code
Temperature	- 100...+ 500°C	PT 100	3010110
Pressure	0...2.5 bar 0...16 bar	Output probe 4....20 mA	3010213 3010214

Gas trains in compliance with EN 676

Please refer to manual.

B Appendix - Electrical panel layout

1	**Index of layouts**
2	Indication of references
3	Single-wire output layout
4	Functional layout star/triangle starter
5	LMV51.... functional layout
6	LMV51.... functional layout
7	LMV51.... functional layout
8	LMV51.... functional layout
9	LMV51.... functional layout
10	LMV51.... functional layout
11	LMV51.... functional layout
12	Electrical wiring that the installer is responsible for
13	Electrical wiring that the installer is responsible for
14	Electrical wiring that the installer is responsible for

2 Indication of references

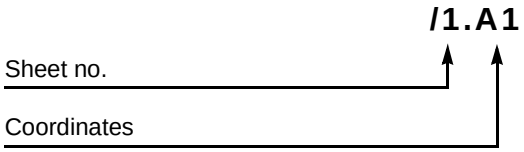

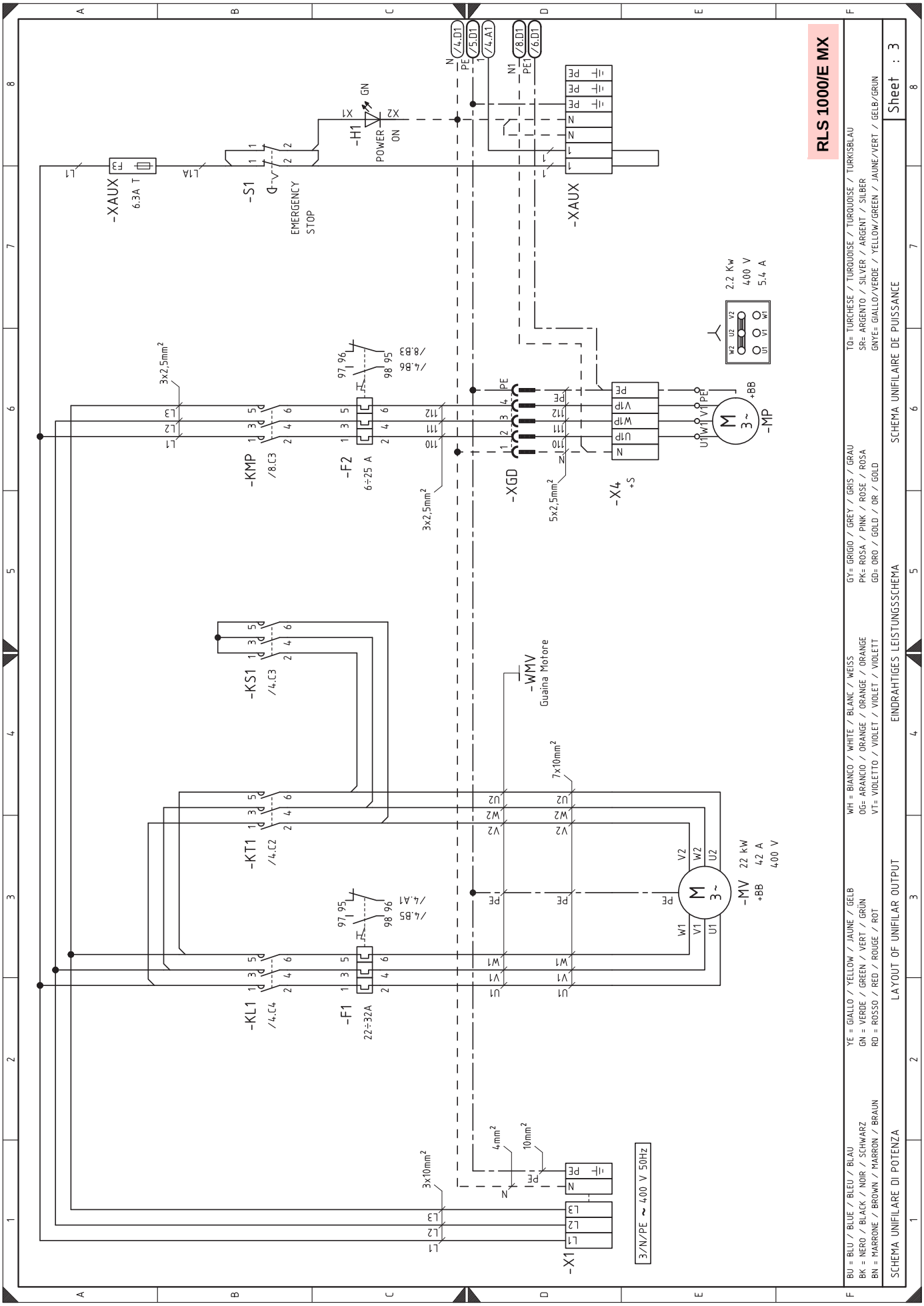
RLS 1000/E MX
-XAUX
6.3A T
-S1
EMERGENCY STOP
-H1
POWER ON
GN
-KMP
/8.C3
-F2
6÷25 A
-XGD
-X4
+S
-MP
+BB
2.2 Kw
400 V
5.4 A
-KS1
/4.C3
-KT1
/4.C2
-KL1
/4.C4
-F1
22÷32A
-WMV
Guaina Motore
-MV
+BB
22 kW
42 A
400 V
-X1
3/N/PE ~ 400 V 50Hz
BU = BLU / BLEU / BLAU
BK = NERO / BLACK / NOIR / SCHWARZ
BN = MARRONE / BROWN / MARRON / BRAUN
YE = GIALLO / YELLOW / JAUNE / GELB
GN = VERDE / GREEN / VERT / GRÜN
RD = ROSSO / RED / ROUGE / ROT
WH = BIANCO / WHITE / BLANC / WEISS
OG= ARANCIO / ORANGE / ORANGE / ORANGE
VT= VIOLETTO / VIOLET / VIOLET / VIOLETT
GY= GRIGIO / GREY / GRIS / GRAU
PK= ROSA / PINK / ROSE / ROSA
GD= ORO / GOLD / OR / GOLD
TQ= TURCHESE / TURQUOISE / TURQUOISE / TURKISBLAU
SR= ARGENTO / SILVER / ARGENT / SILBER
GNYE= GIALLO/VERDE / YELLOW/GREEN / JAUNE/VERT / GELB/GRUN
SCHEMA UNIFILARE DI POTENZA
LAYOUT OF UNIFILAR OUTPUT
EINDRAHTIGES LEISTUNGSSCHEMA
SCHEMA UNIFILAIRE DE PUISSANCE
Sheet : 3

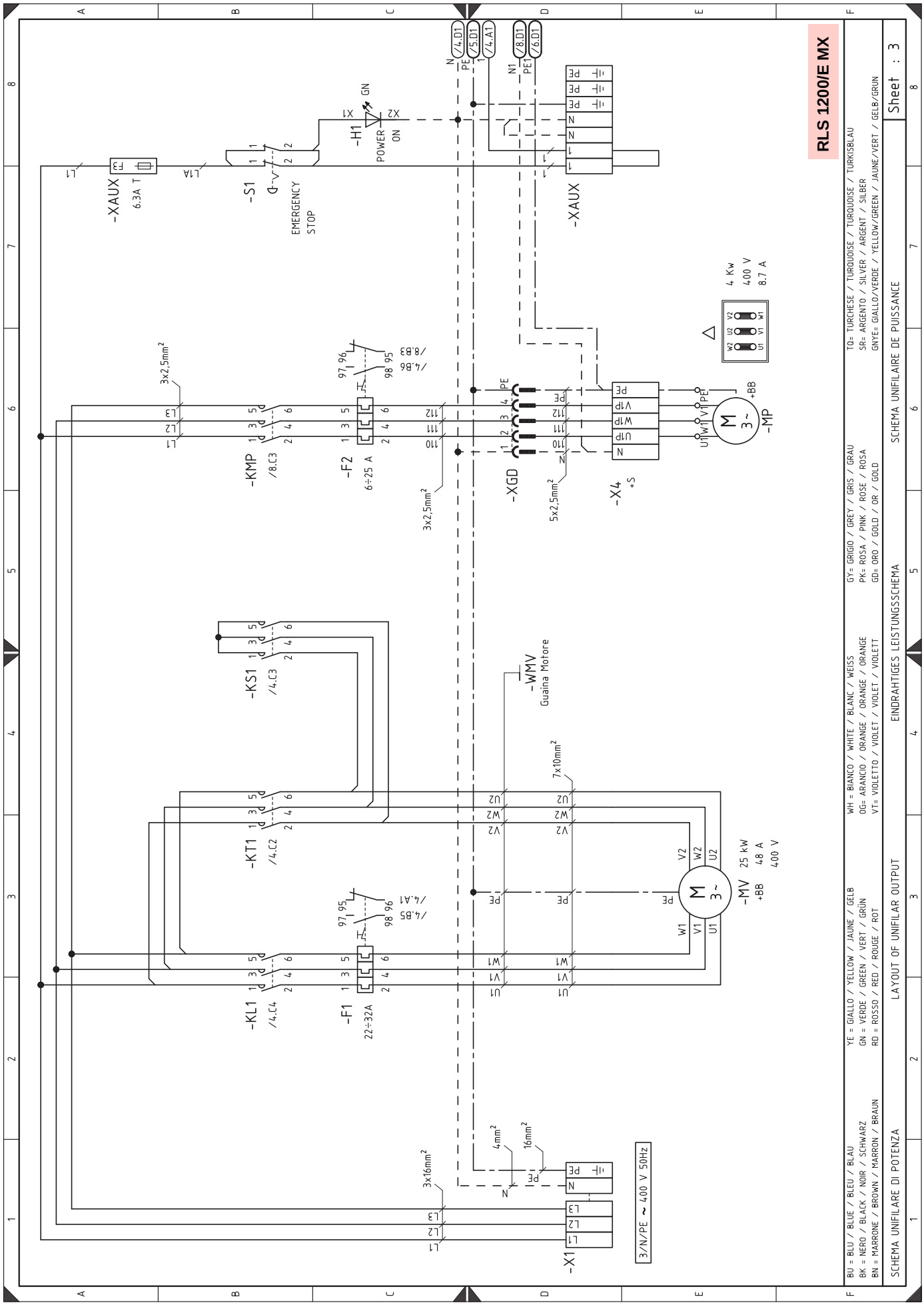
RLS 1200/E MX
-XAUX
6.3A T
-S1
EMERGENCY STOP
-H1
POWER ON
GN
-KMP
/8.C3
-F2
6÷25 A
-KS1
/4.C3
-KT1
/4.C2
-KL1
/4.C4
-F1
22÷32A
-XGD
-X4
+S
-MP
+BB
4 Kw
400 V
8.7 A
-WMV
Guaina Motore
-MV
25 kW
48 A
400 V
-X1
3/N/PE ~ 400 V 50Hz
3x2,5mm²
3x2,5mm²
5x2,5mm²
7x10mm²
3x16mm²
4mm²
16mm²
BU = BLU / BLUE / BLEU / BLAU
BK = NERO / BLACK / NOIR / SCHWARZ
BN = MARRONE / BROWN / MARRON / BRAUN
YE = GIALLO / YELLOW / JAUNE / GELB
GN = VERDE / GREEN / VERT / GRÜN
RD = ROSSO / RED / ROUGE / ROT
WH = BIANCO / WHITE / BLANC / WEISS
OG= ARANCIO / ORANGE / ORANGE / ORANGE
VT= VIOLETTO / VIOLET / VIOLET / VIOLETT
GY= GRIGIO / GREY / GRIS / GRAU
PK= ROSA / PINK / ROSE / ROSA
GD= ORO / GOLD / OR / GOLD
TQ= TURCHESE / TURQUOISE / TURQUOISE / TÜRKISBLAU
SR= ARGENTO / SILVER / ARGENT / SILBER
GNYE= GIALLO/VERDE / YELLOW/GREEN / JAUNE/VERT / GELB/GRÜN
SCHEMA UNIFILARE DI POTENZA
LAYOUT OF UNIFILAR OUTPUT
EINDRAHTIGES LEISTUNGSSCHEMA
SCHEMA UNIFILAIRE DE PUISSANCE
Sheet : 3

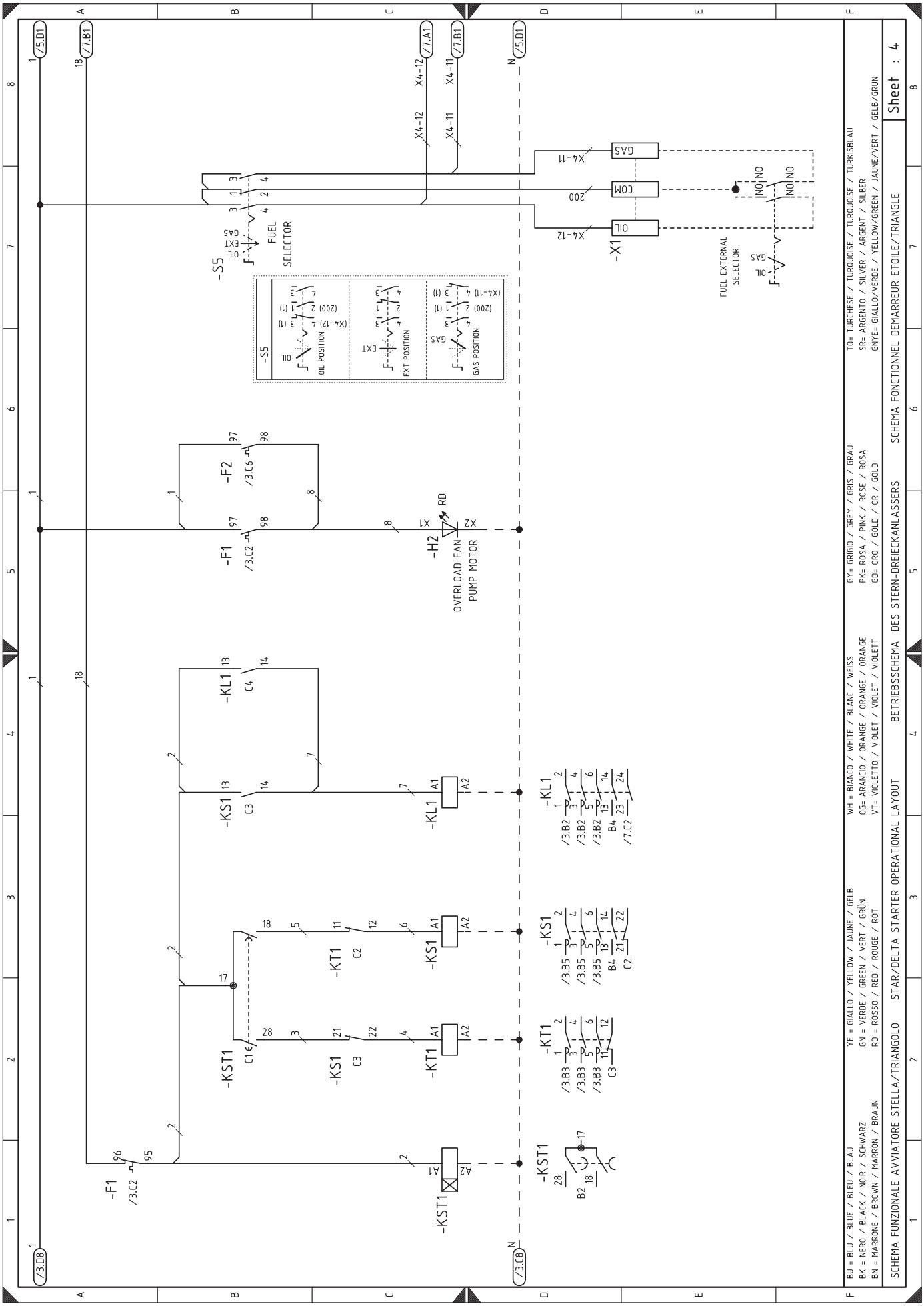
-S5
FUEL SELECTOR
OIL POSITION
EXT POSITION
GAS POSITION
-X1
FUEL EXTERNAL SELECTOR
-F1
-F2
-H2
OVERLOAD FAN PUMP MOTOR
-KL1
-KS1
-KT1
-KST1
BU = BLU / BLEU / BLAU
BK = NERO / BLACK / NOIR / SCHWARZ
BN = MARRONE / BROWN / MARRON / BRAUN
YE = GIALLO / YELLOW / JAUNE / GELB
GN = VERDE / GREEN / VERT / GRÜN
RD = ROSSO / RED / ROUGE / ROT
WH = BIANCO / WHITE / BLANC / WEISS
OG= ARANCIO / ORANGE / ORANGE / ORANGE
VT= VIOLETTO / VIOLET / VIOLET / VIOLETT
GY= GRIGIO / GREY / GRIS / GRAU
PK= ROSA / PINK / ROSE / ROSA
GD= ORO / GOLD / OR / GOLD
TQ= TURCHESE / TURQUOISE / TURQUOISE / TURKISBLAU
SR= ARGENTO / SILVER / ARGENT / SILBER
GNYE= GIALLO/VERDE / YELLOW/GREEN / JAUNE/VERT / GELB/GRUN
SCHEMA FUNZIONALE AVVIATORE STELLA/TRIANGOLO
STAR/DELTA STARTER OPERATIONAL LAYOUT
BETRIEBSSCHEMA DES STERN-DREIECKANLASSERS
SCHEMA FONCTIONNEL DEMARREUR ETOILE/TRIANGLE
Sheet : 4

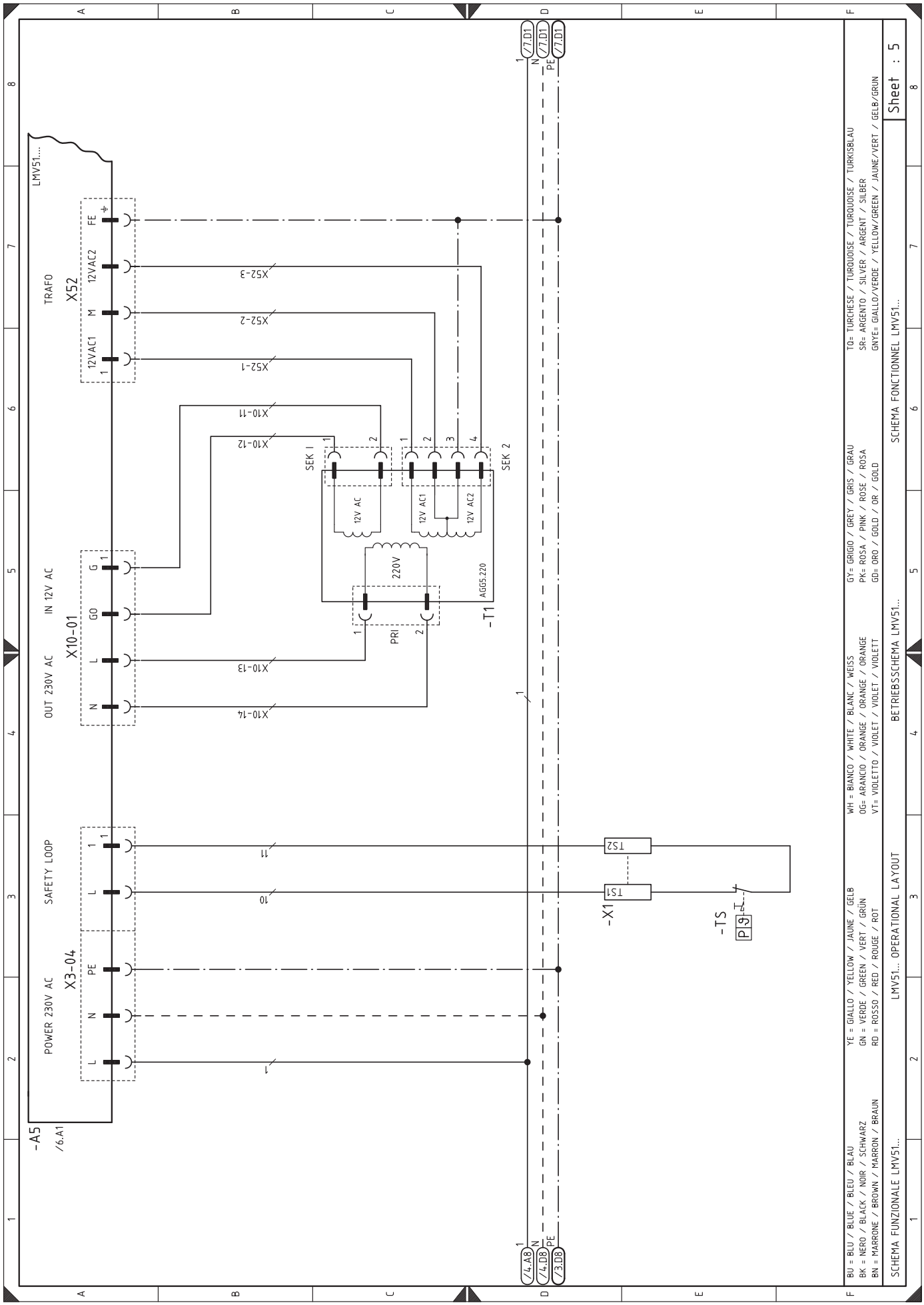
LMV51...
TRAFO
X52
12VAC1
M
12VAC2
FE
X52-1
X52-2
X52-3
X10-11
X10-12
SEK 1
SEK 2
12V AC
12V AC1
12V AC2
220V
AGG5.220
-T1
PRI
X10-01
IN 12V AC
OUT 230V AC
G
GO
L
N
X10-13
X10-14
SAFETY LOOP
POWER 230V AC
X3-04
PE
TS1
TS2
-X1
-TS
-A5
/6.A1
/7.D1
/4.A8
/4.D8
/3.D8
BU = BLU / BLUE / BLEU / BLAU
BK = NERO / BLACK / NOIR / SCHWARZ
BN = MARRONE / BROWN / MARRON / BRAUN
YE = GIALLO / YELLOW / JAUNE / GELB
GN = VERDE / GREEN / VERT / GRÜN
RD = ROSSO / RED / ROUGE / ROT
WH = BIANCO / WHITE / BLANC / WEISS
OG= ARANCIO / ORANGE / ORANGE / ORANGE
VT= VIOLETTO / VIOLET / VIOLET / VIOLETT
GY= GRIGIO / GREY / GRIS / GRAU
PK= ROSA / PINK / ROSE / ROSA
GD= ORO / GOLD / OR / GOLD
TQ= TURCHESE / TURQUOISE / TURQUOISE / TÜRKISBLAU
SR= ARGENTO / SILVER / ARGENT / SILBER
GNYE= GIALLO/VERDE / YELLOW/GREEN / JAUNE/VERT / GELB/GRÜN
SCHEMA FUNZIONALE LMV51...
LMV51... OPERATIONAL LAYOUT
BETRIEBSSCHEMA LMV51...
SCHEMA FONCTIONNEL LMV51...
Sheet : 5

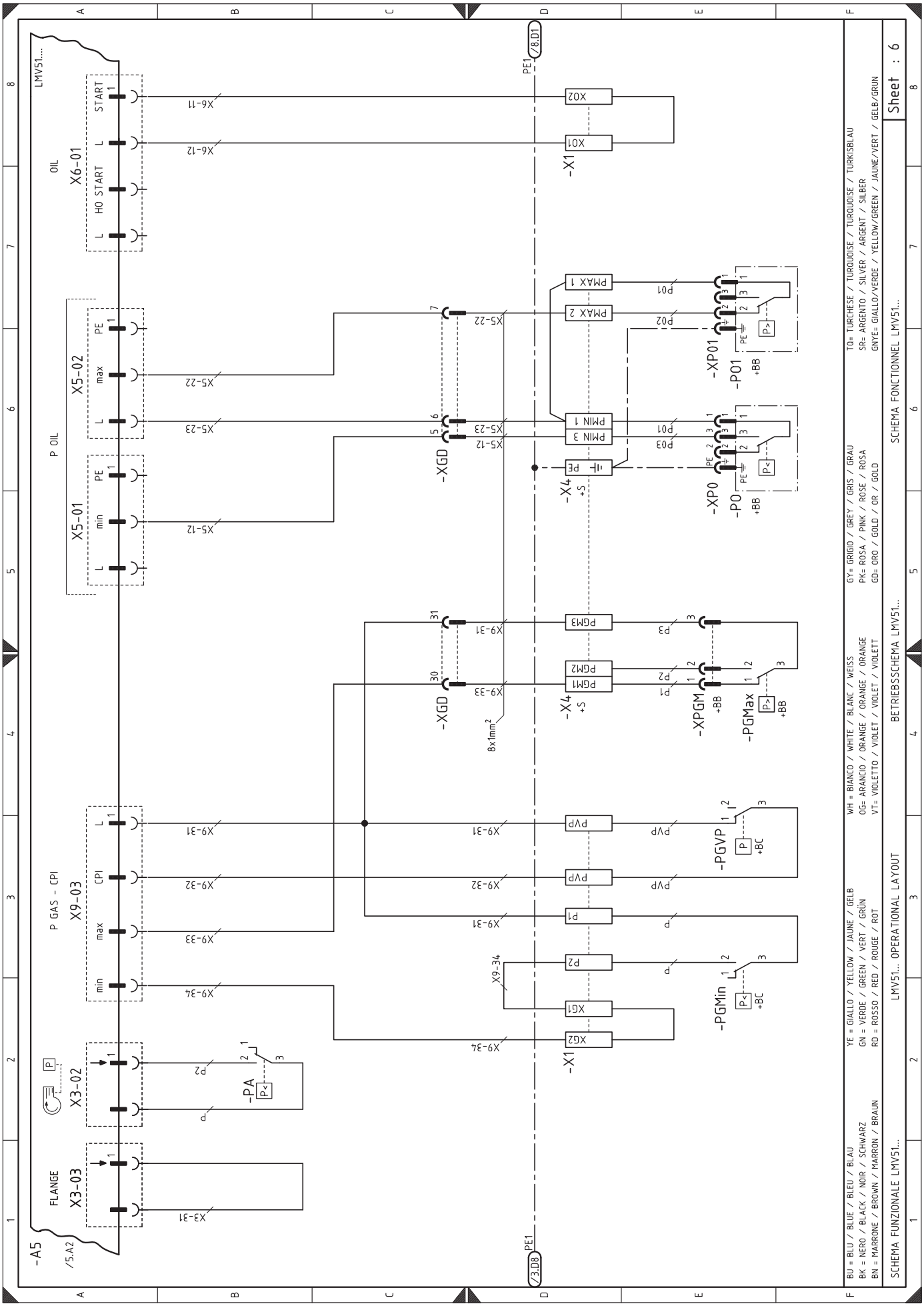

LMV51...
OIL
X6-01
START
HO START
P OIL
X5-02
X5-01
P GAS - CPI
X9-03
X3-02
FLANGE
X3-03
-A5
/5.A2
-X1
-XGD
-X4
-XP01
-P01
-XP0
-P0
-XPGM
-PGMax
-PGVP
-PGMin
-PA
PE1
/8.D1
/3.D8
8x1mm²
BU = BLU / BLUE / BLEU / BLAU
BK = NERO / BLACK / NOIR / SCHWARZ
BN = MARRONE / BROWN / MARRON / BRAUN
YE = GIALLO / YELLOW / JAUNE / GELB
GN = VERDE / GREEN / VERT / GRÜN
RD = ROSSO / RED / ROUGE / ROT
WH = BIANCO / WHITE / BLANC / WEISS
OG= ARANCIO / ORANGE / ORANGE / ORANGE
VT= VIOLETTO / VIOLET / VIOLET / VIOLETT
GY= GRIGIO / GREY / GRIS / GRAU
PK= ROSA / PINK / ROSE / ROSA
GD= ORO / GOLD / OR / GOLD
TQ= TURCHESE / TURQUOISE / TURQUOISE / TURKISBLAU
SR= ARGENTO / SILVER / ARGENT / SILBER
GNYE= GIALLO/VERDE / YELLOW/GREEN / JAUNE/VERT / GELB/GRUN
SCHEMA FUNZIONALE LMV51...
LMV51... OPERATIONAL LAYOUT
BETRIEBSSCHEMA LMV51...
SCHEMA FONCTIONNEL LMV51...
Sheet : 6

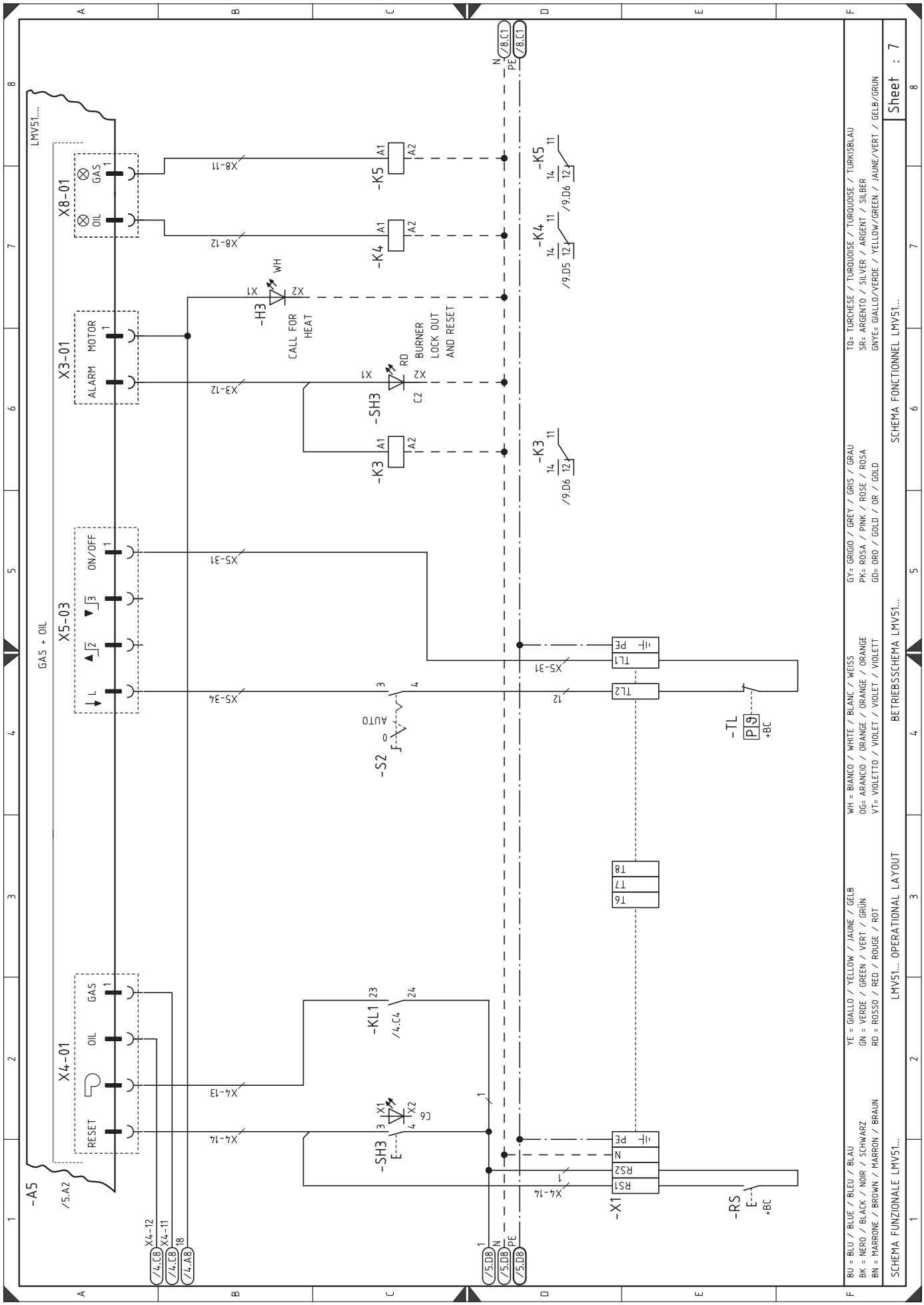
LMV51...
GAS + OIL
X8-01
GAS
OIL
X3-01
MOTOR
ALARM
X5-03
ON/OFF
X4-01
GAS
OIL
RESET
-A5
/5.A2
-K5
-K4
-H3
CALL FOR HEAT
-SH3
BURNER LOCK OUT AND RESET
-K3
-S2
AUTO
-KL1
/4.C4
-X1
-TL
-RS
/8.C1
/9.D6
/9.D5
/5.D8
/4.C8
/4.A8
BU = BLEU / BLEU / BLAU
BK = NERO / BLACK / NOIR / SCHWARZ
BN = MARRONE / BROWN / MARRON / BRAUN
YE = GIALLO / YELLOW / JAUNE / GELB
GN = VERDE / GREEN / VERT / GRÜN
RD = ROSSO / RED / ROUGE / ROT
WH = BIANCO / WHITE / BLANC / WEISS
OG= ARANCIO / ORANGE / ORANGE / ORANGE
VT= VIOLETTO / VIOLET / VIOLET / VIOLETT
GY= GRIGIO / GREY / GRIS / GRAU
PK= ROSA / PINK / ROSE / ROSA
GD= ORO / GOLD / OR / GOLD
TQ= TURCHESE / TURQUOISE / TURQUOISE / TÜRKISBLAU
SR= ARGENTO / SILVER / ARGENT / SILBER
GNYE= GIALLO/VERDE / YELLOW/GREEN / JAUNE/VERT / GELB/GRÜN
SCHEMA FUNZIONALE LMV51...
LMV51... OPERATIONAL LAYOUT
BETRIEBSSCHEMA LMV51...
SCHEMA FONCTIONNEL LMV51...
Sheet : 7

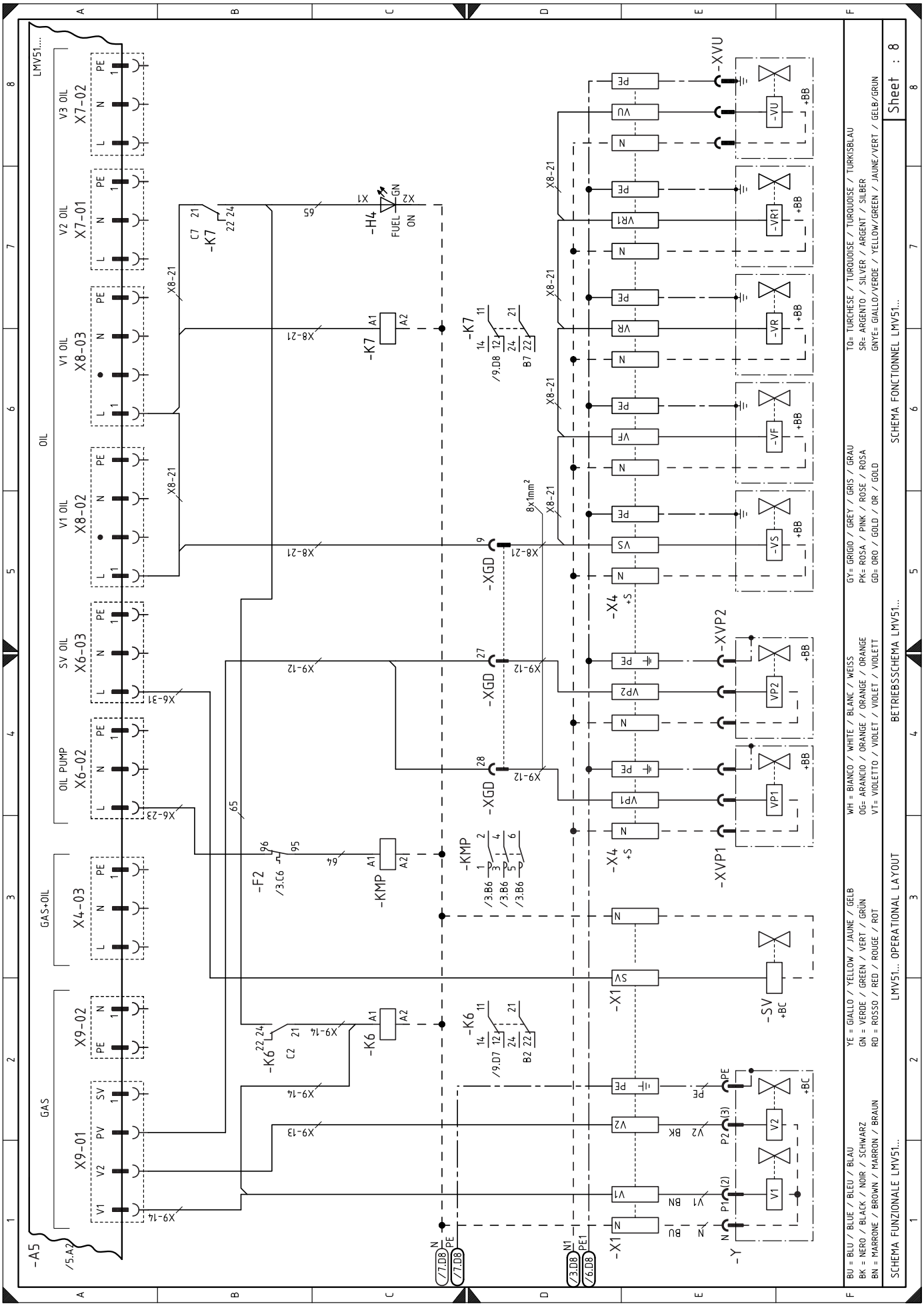
SCHEMA FUNZIONALE LMV51...
LMV51... OPERATIONAL LAYOUT
BETRIEBSSCHEMA LMV51...
SCHEMA FONCTIONNEL LMV51...
Sheet : 8
BU = BLU / BLUE / BLEU / BLAU
BK = NERO / BLACK / NOIR / SCHWARZ
BN = MARRONE / BROWN / MARRON / BRAUN
YE = GIALLO / YELLOW / JAUNE / GELB
GN = VERDE / GREEN / VERT / GRÜN
RD = ROSSO / RED / ROUGE / ROT
WH = BIANCO / WHITE / BLANC / WEISS
OG = ARANCIO / ORANGE / ORANGE / ORANGE
VT = VIOLETTO / VIOLET / VIOLET / VIOLETT
GY = GRIGIO / GREY / GRIS / GRAU
PK = ROSA / PINK / ROSE / ROSA
GD = ORO / GOLD / OR / GOLD
TQ = TURCHESE / TURQUOISE / TURQUOISE / TÜRKISBLAU
SR = ARGENTO / SILVER / ARGENT / SILBER
GNYE = GIALLO/VERDE / YELLOW/GREEN / JAUNE/VERT / GELB/GRÜN
LMV51...
OIL
GAS
GAS+OIL
OIL PUMP
SV OIL
V1 OIL
V2 OIL
V3 OIL
X7-02
X7-01
X8-03
X8-02
X6-03
X6-02
X4-03
X9-02
X9-01
-A5
/5.A2
-K7
-H4
FUEL
ON
-K6
-F2
/3.C6
-KMP
-XGD
-X4
-X1
-XVU
-XVP2
-XVP1
-SV
-Y
-VU
-VR1
-VR
-VF
-VS
-VP2
-VP1
-V2
-V1
+BB
+BC
8x1mm²
/9.D8
/9.D7
/3.B6
/7.D8
/3.D8
/6.D8

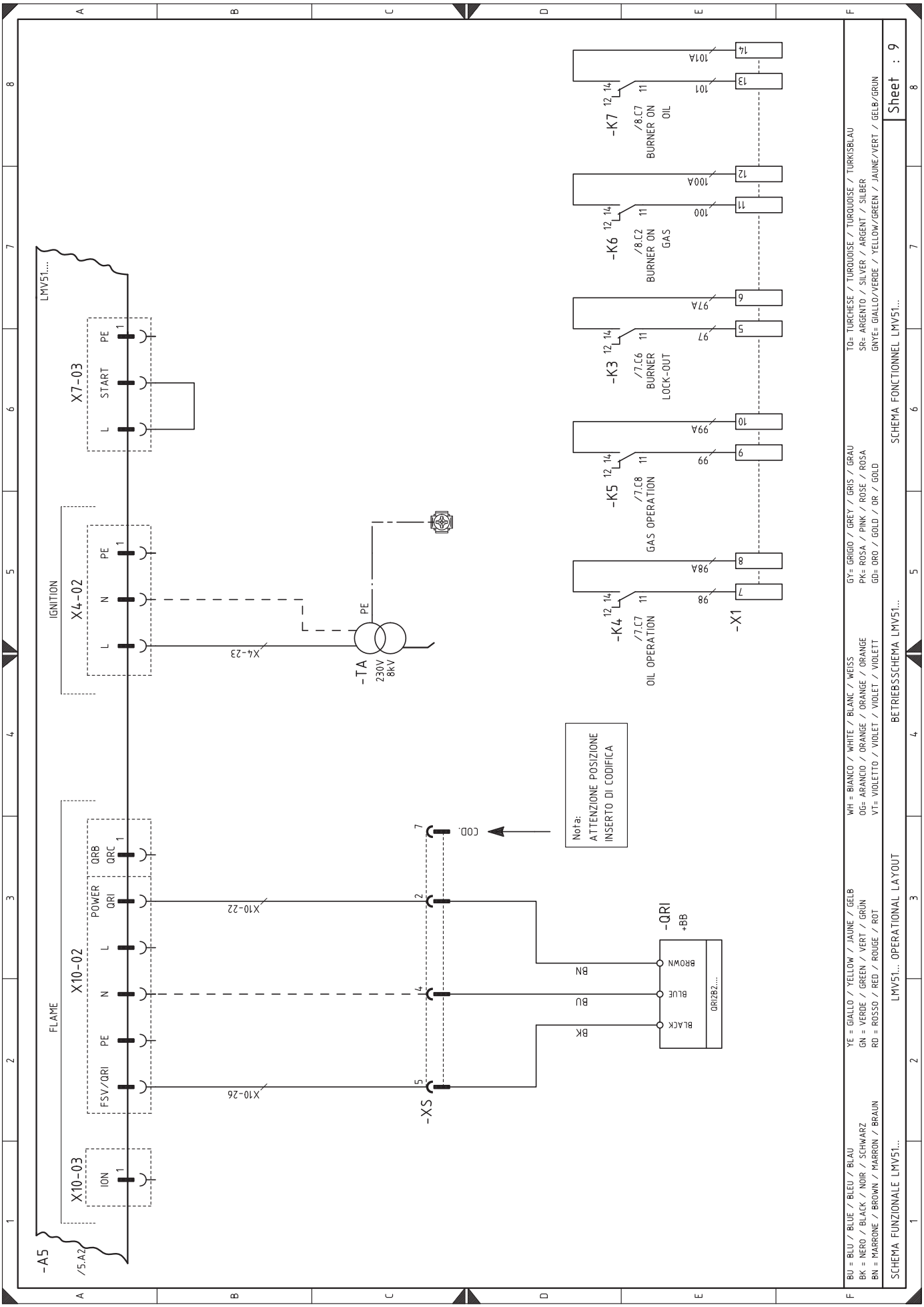
-A5
/5.A2
LMV51...
FLAME
X10-03
ION
X10-02
FSV/QRI
PE
N
L
POWER
QRI
QRB
QRC
IGNITION
X4-02
X7-03
START
-TA
230V
8kV
X4-23
X10-22
X10-26
-XS
COD.
Nota:
ATTENZIONE POSIZIONE
INSERTO DI CODIFICA
-QRI
+BB
BROWN
BLUE
BLACK
QRI2B2....
BN
BU
BK
-K4
/7.C7
OIL OPERATION
-K5
/7.C8
GAS OPERATION
-K3
/7.C6
BURNER
LOCK-OUT
-K6
/8.C2
BURNER ON
GAS
-K7
/8.C7
BURNER ON
OIL
-X1
BU = BLU / BLUE / BLEU / BLAU
BK = NERO / BLACK / NOIR / SCHWARZ
BN = MARRONE / BROWN / MARRON / BRAUN
YE = GIALLO / YELLOW / JAUNE / GELB
GN = VERDE / GREEN / VERT / GRÜN
RD = ROSSO / RED / ROUGE / ROT
WH = BIANCO / WHITE / BLANC / WEISS
OG= ARANCIO / ORANGE / ORANGE / ORANGE
VT= VIOLETTO / VIOLET / VIOLET / VIOLETT
GY= GRIGIO / GREY / GRIS / GRAU
PK= ROSA / PINK / ROSE / ROSA
GD= ORO / GOLD / OR / GOLD
TQ= TURCHESE / TURQUOISE / TURQUOISE / TURKISBLAU
SR= ARGENTO / SILVER / ARGENT / SILBER
GNYE= GIALLO/VERDE / YELLOW/GREEN / JAUNE/VERT / GELB/GRUN
SCHEMA FUNZIONALE LMV51...
LMV51... OPERATIONAL LAYOUT
BETRIEBSSCHEMA LMV51...
SCHEMA FONCTIONNEL LMV51...
Sheet : 9

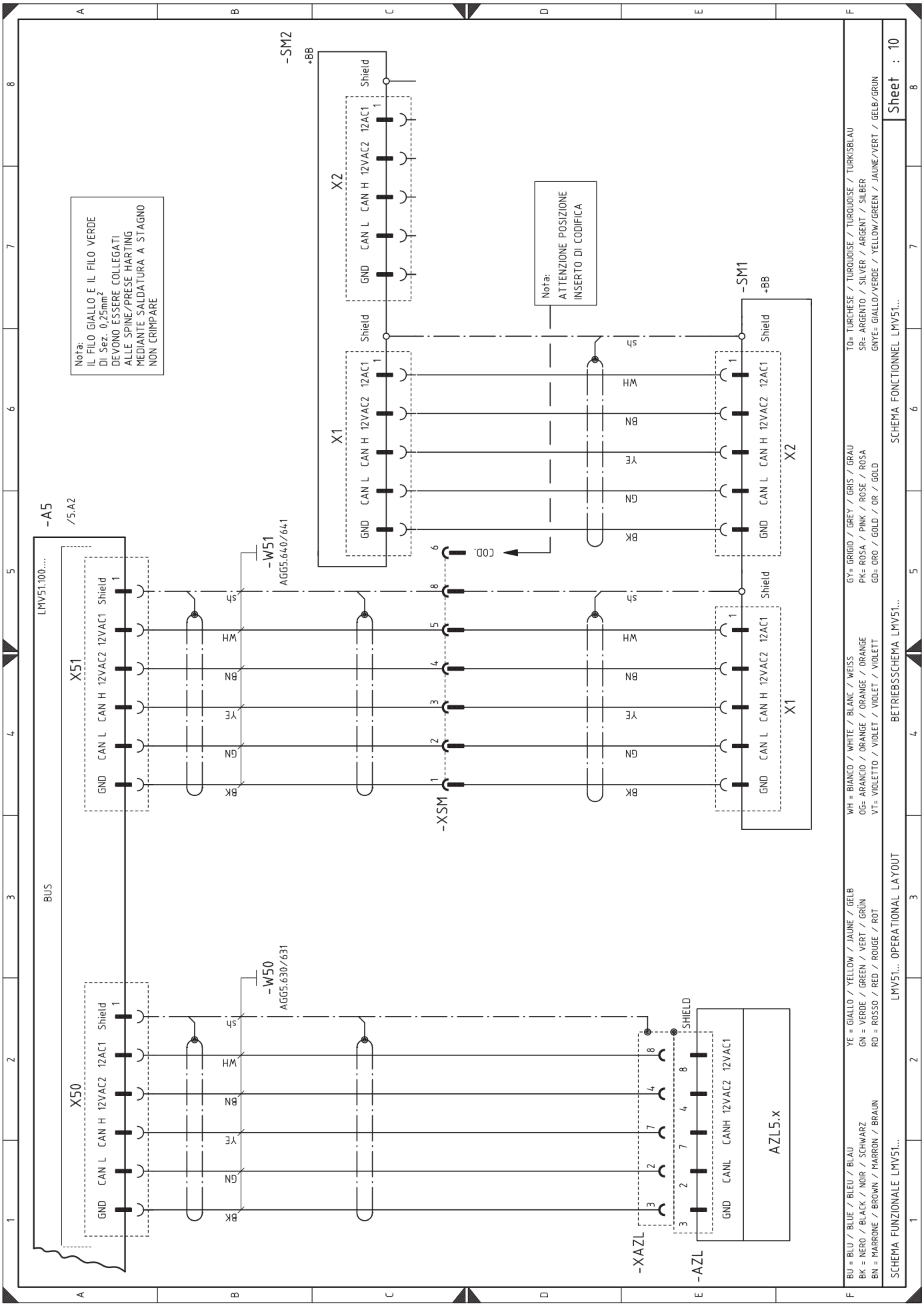
-A5
/5.A2
LMV51.100....
BUS
X50
X51
GND CAN L CAN H 12VAC2 12AC1 Shield
-W50
AGG5.630/631
-W51
AGG5.640/641
-XSM
COD.
-XAZL
-AZL
SHIELD
GND CANL CANH 12VAC2 12VAC1
AZL5.x
-SM2
+BB
X2
X1
-SM1
Nota:
IL FILO GIALLO E IL FILO VERDE
DI Sez. 0,25mm²
DEVONO ESSERE COLLEGATI
ALLE SPINE/PRESE HARTING
MEDIANTE SALDATURA A STAGNO
NON CRIMPARE
Nota:
ATTENZIONE POSIZIONE
INSERTO DI CODIFICA
BU = BLU / BLUE / BLEU / BLAU
BK = NERO / BLACK / NOIR / SCHWARZ
BN = MARRONE / BROWN / MARRON / BRAUN
YE = GIALLO / YELLOW / JAUNE / GELB
GN = VERDE / GREEN / VERT / GRÜN
RD = ROSSO / RED / ROUGE / ROT
WH = BIANCO / WHITE / BLANC / WEISS
OG= ARANCIO / ORANGE / ORANGE / ORANGE
VT= VIOLETTO / VIOLET / VIOLET / VIOLETT
GY= GRIGIO / GREY / GRIS / GRAU
PK= ROSA / PINK / ROSE / ROSA
GD= ORO / GOLD / OR / GOLD
TQ= TURCHESE / TURQUOISE / TURQUOISE / TURKISBLAU
SR= ARGENTO / SILVER / ARGENT / SILBER
GNYE= GIALLO/VERDE / YELLOW/GREEN / JAUNE/VERT / GELB/GRUN
SCHEMA FUNZIONALE LMV51...
LMV51... OPERATIONAL LAYOUT
BETRIEBSSCHEMA LMV51...
SCHEMA FONCTIONNEL LMV51...
Sheet : 10

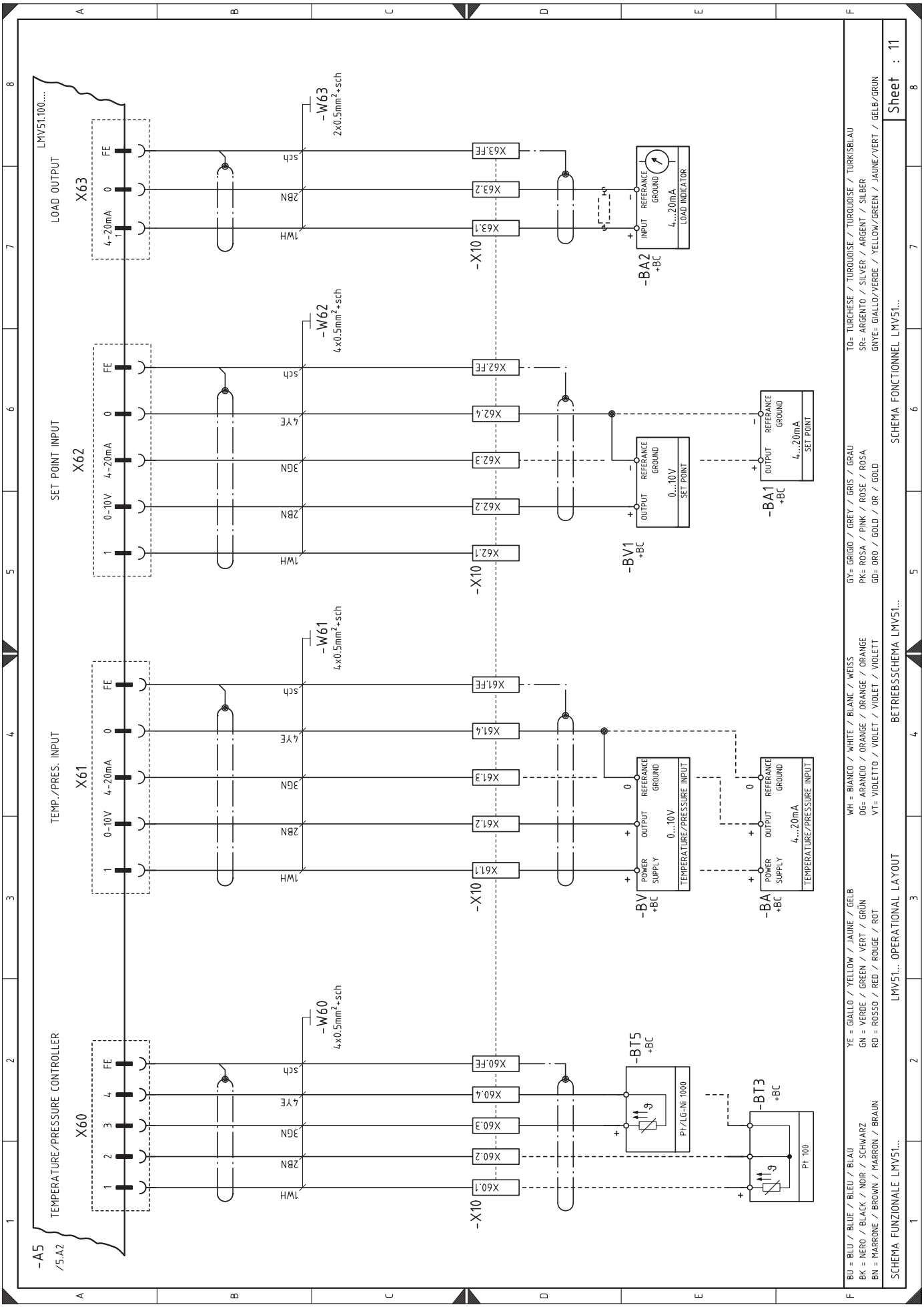
LMV51.100...
LOAD OUTPUT
X63
SET POINT INPUT
X62
TEMP./PRES. INPUT
X61
TEMPERATURE/PRESSURE CONTROLLER
X60
-A5
/5.A2
-W63
2x0.5mm²+sch
-W62
4x0.5mm²+sch
-W61
4x0.5mm²+sch
-W60
4x0.5mm²+sch
-X10
-BA2
+BC
LOAD INDICATOR
-BV1
+BC
-BA1
+BC
-BV
+BC
-BA
+BC
-BT5
+BC
-BT3
+BC
Pt 100
Pt/LG-Ni 1000
BU = BLU / BLEU / BLAU
BK = NERO / BLACK / NOIR / SCHWARZ
BN = MARRONE / BROWN / MARRON / BRAUN
YE = GIALLO / YELLOW / JAUNE / GELB
GN = VERDE / GREEN / VERT / GRÜN
RD = ROSSO / RED / ROUGE / ROT
WH = BIANCO / WHITE / BLANC / WEISS
OG= ARANCIO / ORANGE / ORANGE / ORANGE
VT= VIOLETTO / VIOLET / VIOLET / VIOLETT
GY= GRIGIO / GREY / GRIS / GRAU
PK= ROSA / PINK / ROSE / ROSA
GD= ORO / GOLD / OR / GOLD
TQ= TURCHESE / TURQUOISE / TURQUOISE / TÜRKISBLAU
SR= ARGENTO / SILVER / ARGENT / SILBER
GNYE= GIALLO/VERDE / YELLOW/GREEN / JAUNE/VERT / GELB/GRÜN
SCHEMA FUNZIONALE LMV51...
LMV51... OPERATIONAL LAYOUT
BETRIEBSSCHEMA LMV51...
SCHEMA FONCTIONNEL LMV51...
Sheet : 11

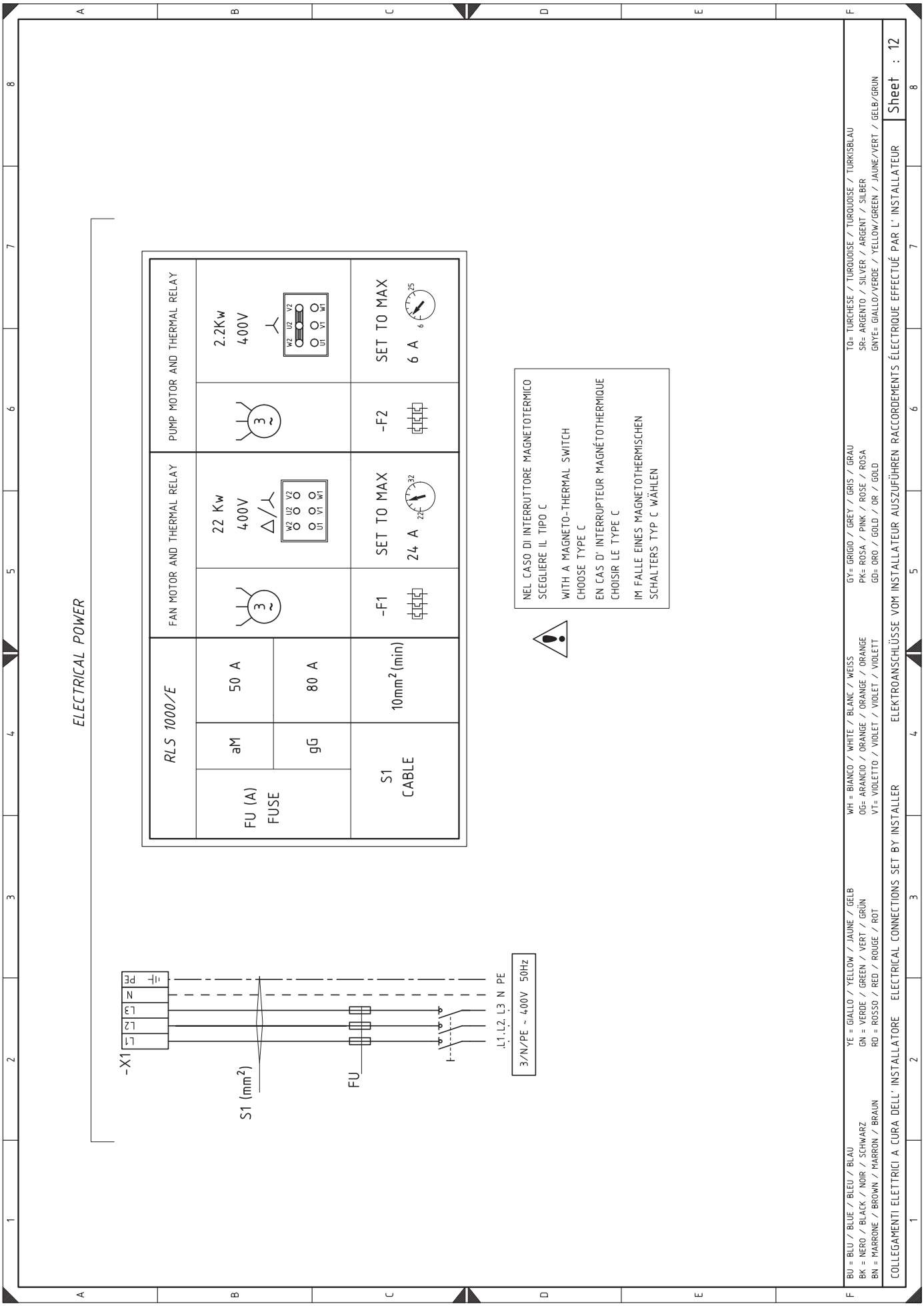
ELECTRICAL POWER
RLS 1000/E
FAN MOTOR AND THERMAL RELAY
PUMP MOTOR AND THERMAL RELAY
FU (A)
FUSE
aM
50 A
gG
80 A
S1
CABLE
10mm² (min)
22 Kw
400V
Δ/⅄
-F1
SET TO MAX
24 A
2.2Kw
400V
-F2
SET TO MAX
6 A
NEL CASO DI INTERRUTTORE MAGNETOTERMICO
SCEGLIERE IL TIPO C
WITH A MAGNETO-THERMAL SWITCH
CHOOSE TYPE C
EN CAS D' INTERRUPTEUR MAGNÉTOTHERMIQUE
CHOISIR LE TYPE C
IM FALLE EINES MAGNETOTHERMISCHEN
SCHALTERS TYP C WÄHLEN
-X1
L1
L2
L3
N
PE
S1 (mm²)
FU
L1 L2 L3 N PE
3/N/PE ~ 400V 50Hz
BU = BLU / BLEU / BLAU
BK = NERO / BLACK / NOIR / SCHWARZ
BN = MARRONE / BROWN / MARRON / BRAUN
YE = GIALLO / YELLOW / JAUNE / GELB
GN = VERDE / GREEN / VERT / GRÜN
RD = ROSSO / RED / ROUGE / ROT
WH = BIANCO / WHITE / BLANC / WEISS
OG= ARANCIO / ORANGE / ORANGE / ORANGE
VT= VIOLETTO / VIOLET / VIOLET / VIOLETT
GY= GRIGIO / GREY / GRIS / GRAU
PK= ROSA / PINK / ROSE / ROSA
GD= ORO / GOLD / OR / GOLD
TQ= TURCHESE / TURQUOISE / TURQUOISE / TÜRKISBLAU
SR= ARGENTO / SILVER / ARGENT / SILBER
GNYE= GIALLO/VERDE / YELLOW/GREEN / JAUNE/VERT / GELB/GRÜN
COLLEGAMENTI ELETTRICI A CURA DELL' INSTALLATORE
ELECTRICAL CONNECTIONS SET BY INSTALLER
ELEKTROANSCHLÜSSE VOM INSTALLATEUR AUSZUFÜHREN
RACCORDEMENTS ÉLECTRIQUE EFFECTUÉ PAR L' INSTALLATEUR
Sheet : 12

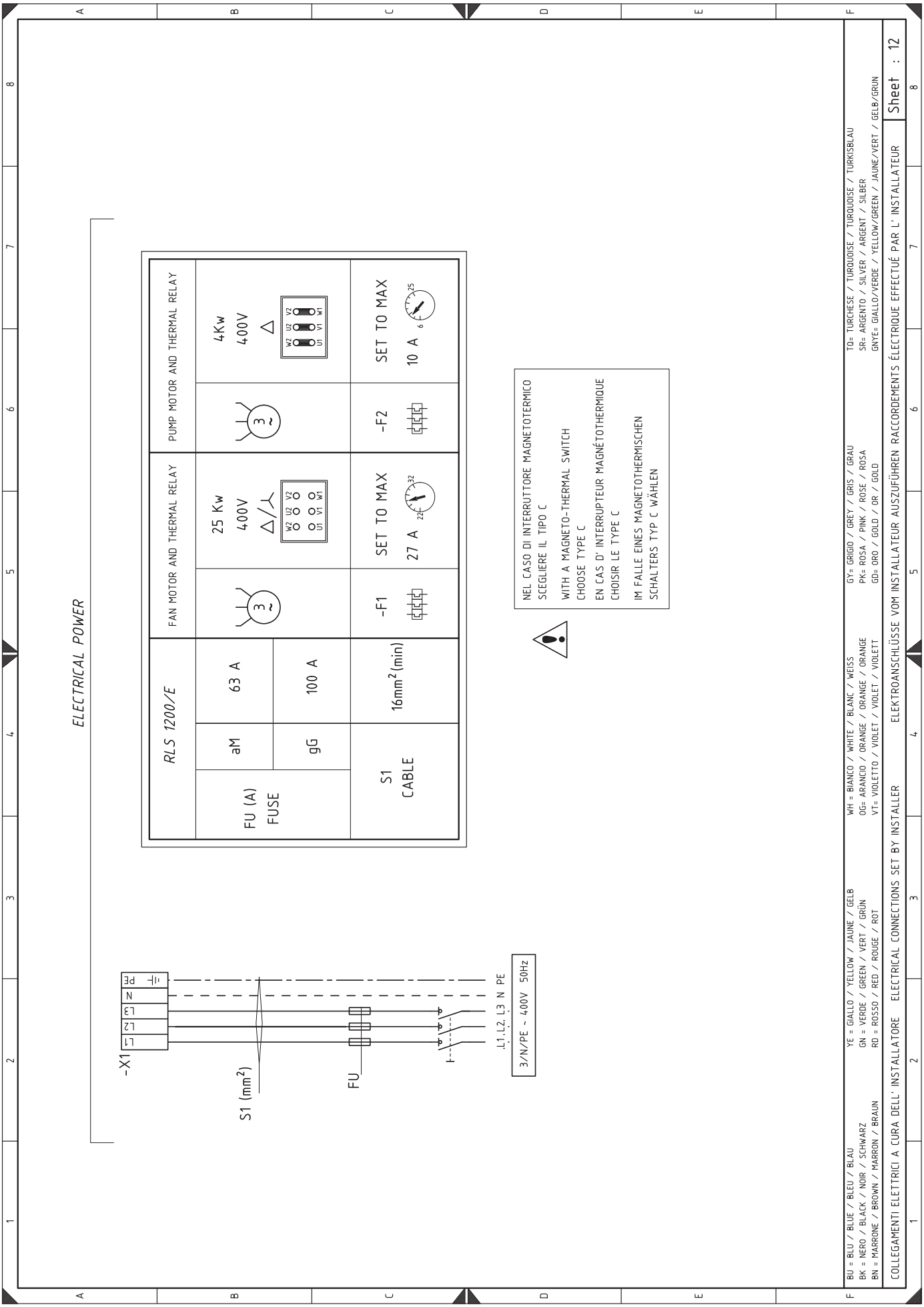
ELECTRICAL POWER
RLS 1200/E
FAN MOTOR AND THERMAL RELAY
PUMP MOTOR AND THERMAL RELAY
FU (A)
FUSE
aM
63 A
gG
100 A
S1
CABLE
16mm²(min)
25 Kw
400V
Δ/⊥
-F1
SET TO MAX
27 A
22
32
4Kw
400V
Δ
-F2
SET TO MAX
10 A
6
25
W2 U2 V2
U1 V1 W1
NEL CASO DI INTERRUTTORE MAGNETOTERMICO
SCEGLIERE IL TIPO C
WITH A MAGNETO-THERMAL SWITCH
CHOOSE TYPE C
EN CAS D' INTERRUPTEUR MAGNÉTOTHERMIQUE
CHOISIR LE TYPE C
IM FALLE EINES MAGNETOTHERMISCHEN
SCHALTERS TYP C WÄHLEN
-X1
L1
L2
L3
N
PE
S1 (mm²)
FU
L1 L2 L3 N PE
3/N/PE ~ 400V 50Hz
BU = BLU / BLUE / BLEU / BLAU
BK = NERO / BLACK / NOIR / SCHWARZ
BN = MARRONE / BROWN / MARRON / BRAUN
YE = GIALLO / YELLOW / JAUNE / GELB
GN = VERDE / GREEN / VERT / GRÜN
RD = ROSSO / RED / ROUGE / ROT
WH = BIANCO / WHITE / BLANC / WEISS
OG= ARANCIO / ORANGE / ORANGE / ORANGE
VT= VIOLETTO / VIOLET / VIOLET / VIOLETT
GY= GRIGIO / GREY / GRIS / GRAU
PK= ROSA / PINK / ROSE / ROSA
GD= ORO / GOLD / OR / GOLD
TQ= TURCHESE / TURQUOISE / TURQUOISE / TÜRKISBLAU
SR= ARGENTO / SILVER / ARGENT / SILBER
GNYE= GIALLO/VERDE / YELLOW/GREEN / JAUNE/VERT / GELB/GRÜN
COLLEGAMENTI ELETTRICI A CURA DELL' INSTALLATORE
ELECTRICAL CONNECTIONS SET BY INSTALLER
ELEKTROANSCHLÜSSE VOM INSTALLATEUR AUSZUFÜHREN
RACCORDEMENTS ÉLECTRIQUE EFFECTUÉ PAR L' INSTALLATEUR
Sheet : 12

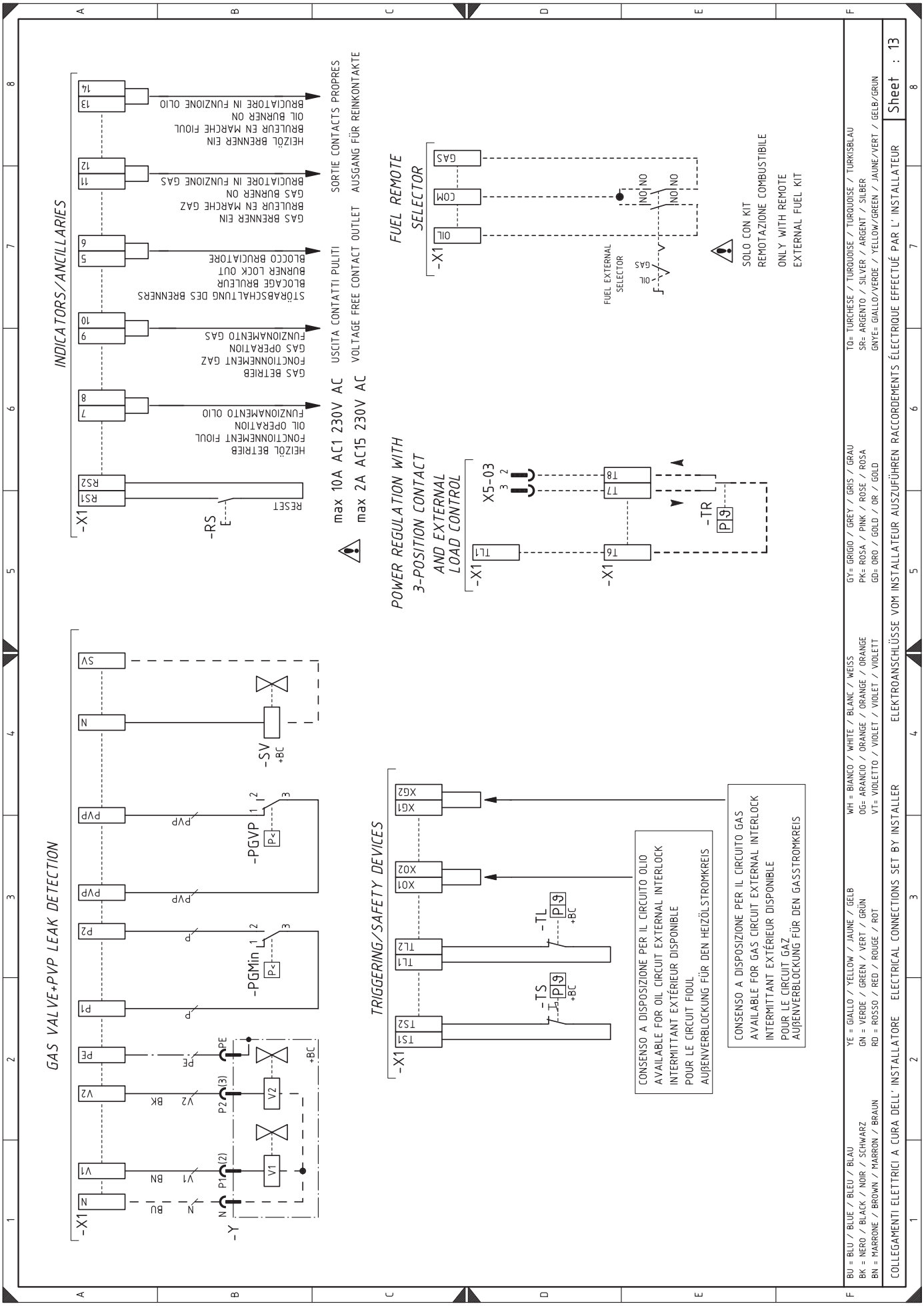
INDICATORS/ANCILLARIES
HEIZÖL BETRIEB
FONCTIONNEMENT FIOUL
OIL OPERATION
FUNZIONAMENTO OLIO
GAS BETRIEB
FONCTIONNEMENT GAZ
GAS OPERATION
FUNZIONAMENTO GAS
STÖRABSCHALTUNG DES BRENNERS
BLOCAGE BRULEUR
BURNER LOCK OUT
BLOCCO BRUCIATORE
GAS BRENNER EIN
BRULEUR EN MARCHE GAZ
GAS BURNER ON
BRUCIATORE IN FUNZIONE GAS
HEIZÖL BRENNER EIN
BRULEUR EN MARCHE FIOUL
OIL BURNER ON
BRUCIATORE IN FUNZIONE OLIO
SORTIE CONTACTS PROPRES
AUSGANG FÜR REINKONTAKTE
USCITA CONTATTI PULITI
VOLTAGE FREE CONTACT OUTLET
max 10A AC1 230V AC
max 2A AC15 230V AC
RESET
-RS
-X1
FUEL REMOTE SELECTOR
FUEL EXTERNAL SELECTOR
SOLO CON KIT
REMOTAZIONE COMBUSTIBILE
ONLY WITH REMOTE
EXTERNAL FUEL KIT
POWER REGULATION WITH
3-POSITION CONTACT
AND EXTERNAL
LOAD CONTROL
X5-03
-TR
GAS VALVE+PVP LEAK DETECTION
-PGMin
-PGVP
-SV
-Y
TRIGGERING/SAFETY DEVICES
-TS
-TL
CONSENSO A DISPOSIZIONE PER IL CIRCUITO OLIO
AVAILABLE FOR OIL CIRCUIT EXTERNAL INTERLOCK
INTERMITTANT EXTÉRIEUR DISPONIBLE
POUR LE CIRCUIT FIOUL
AUßENVERBLOCKUNG FÜR DEN HEIZÖLSTROMKREIS
CONSENSO A DISPOSIZIONE PER IL CIRCUITO GAS
AVAILABLE FOR GAS CIRCUIT EXTERNAL INTERLOCK
INTERMITTANT EXTÉRIEUR DISPONIBLE
POUR LE CIRCUIT GAZ
AUßENVERBLOCKUNG FÜR DEN GASSTROMKREIS
BU = BLU / BLEU / BLAU
BK = NERO / BLACK / NOIR / SCHWARZ
BN = MARRONE / BROWN / MARRON / BRAUN
YE = GIALLO / YELLOW / JAUNE / GELB
GN = VERDE / GREEN / VERT / GRÜN
RD = ROSSO / RED / ROUGE / ROT
WH = BIANCO / WHITE / BLANC / WEISS
OG= ARANCIO / ORANGE / ORANGE / ORANGE
VT= VIOLETTO / VIOLET / VIOLET / VIOLETT
GY= GRIGIO / GREY / GRIS / GRAU
PK= ROSA / PINK / ROSE / ROSA
GD= ORO / GOLD / OR / GOLD
TQ= TURCHESE / TURQUOISE / TURQUOISE / TURKISBLAU
SR= ARGENTO / SILVER / ARGENT / SILBER
GNYE= GIALLO/VERDE / YELLOW/GREEN / JAUNE/VERT / GELB/GRUN
COLLEGAMENTI ELETTRICI A CURA DELL' INSTALLATORE
ELECTRICAL CONNECTIONS SET BY INSTALLER
ELEKTROANSCHLÜSSE VOM INSTALLATEUR AUSZUFÜHREN
RACCORDEMENTS ÉLECTRIQUE EFFECTUÉ PAR L' INSTALLATEUR
Sheet : 13

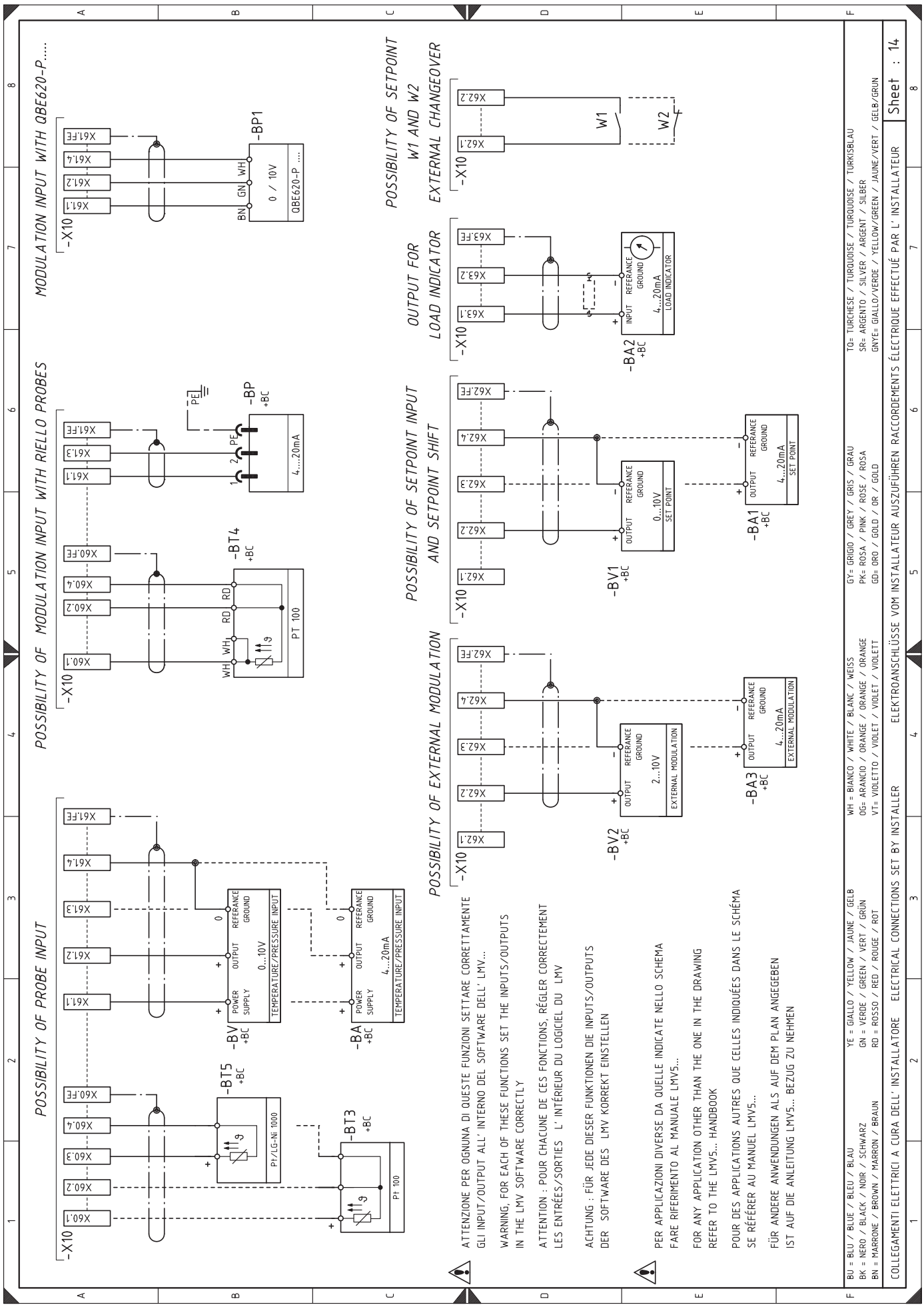
POSSIBILITY OF PROBE INPUT
POSSIBILITY OF MODULATION INPUT WITH RIELLO PROBES
MODULATION INPUT WITH QBE620-P.....
POSSIBILITY OF EXTERNAL MODULATION
POSSIBILITY OF SETPOINT INPUT AND SETPOINT SHIFT
OUTPUT FOR LOAD INDICATOR
POSSIBILITY OF SETPOINT W1 AND W2 EXTERNAL CHANGEOVER
-X10
-BT5 +BC
Pt/LG-Ni 1000
-BV +BC
POWER SUPPLY
OUTPUT
REFERANCE GROUND
0...10V
TEMPERATURE/PRESSURE INPUT
-BT3 +BC
Pt 100
-BA +BC
4...20mA
-BT4 +BC
PT 100
-BP +BC
PE
-BP1
0 / 10V
QBE620-P ....
-BV2 +BC
2...10V
EXTERNAL MODULATION
-BA3 +BC
-BV1 +BC
SET POINT
-BA1 +BC
-BA2 +BC
INPUT
LOAD INDICATOR
W1
W2
ATTENZIONE PER OGNUNA DI QUESTE FUNZIONI SETTARE CORRETTAMENTE GLI INPUT/OUTPUT ALL' INTERNO DEL SOFTWARE DELL' LMV...
WARNING, FOR EACH OF THESE FUNCTIONS SET THE INPUTS/OUTPUTS IN THE LMV SOFTWARE CORRECTLY
ATTENTION : POUR CHACUNE DE CES FONCTIONS, RÉGLER CORRECTEMENT LES ENTRÉES/SORTIES L' INTÉRIEUR DU LOGICIEL DU LMV
ACHTUNG : FÜR JEDE DIESER FUNKTIONEN DIE INPUTS/OUTPUTS DER SOFTWARE DES LMV KORREKT EINSTELLEN
PER APPLICAZIONI DIVERSE DA QUELLE INDICATE NELLO SCHEMA FARE RIFERIMENTO AL MANUALE LMV5...
FOR ANY APPLICATION OTHER THAN THE ONE IN THE DRAWING REFER TO THE LMV5... HANDBOOK
POUR DES APPLICATIONS AUTRES QUE CELLES INDIQUÉES DANS LE SCHÉMA SE RÉFÉRER AU MANUEL LMV5...
FÜR ANDERE ANWENDUNGEN ALS AUF DEM PLAN ANGEGEBEN IST AUF DIE ANLEITUNG LMV5... BEZUG ZU NEHMEN
BU = BLU / BLUE / BLEU / BLAU
BK = NERO / BLACK / NOIR / SCHWARZ
BN = MARRONE / BROWN / MARRON / BRAUN
YE = GIALLO / YELLOW / JAUNE / GELB
GN = VERDE / GREEN / VERT / GRÜN
RD = ROSSO / RED / ROUGE / ROT
WH = BIANCO / WHITE / BLANC / WEISS
OG= ARANCIO / ORANGE / ORANGE / ORANGE
VT= VIOLETTO / VIOLET / VIOLET / VIOLETT
GY= GRIGIO / GREY / GRIS / GRAU
PK= ROSA / PINK / ROSE / ROSA
GD= ORO / GOLD / OR / GOLD
TQ= TURCHESE / TURQUOISE / TURQUOISE / TÜRKISBLAU
SR= ARGENTO / SILVER / ARGENT / SILBER
GNYE= GIALLO/VERDE / YELLOW/GREEN / JAUNE/VERT / GELB/GRÜN
COLLEGAMENTI ELETTRICI A CURA DELL' INSTALLATORE ELECTRICAL CONNECTIONS SET BY INSTALLER ELEKTROANSCHLÜSSE VOM INSTALLATEUR AUSZUFÜHREN RACCORDEMENTS ÉLECTRIQUE EFFECTUÉ PAR L' INSTALLATEUR
Sheet : 14

Wiring layout key

A5	Control box
AZL	Display for control box
BA	Output probe in current
BA1	Output device in current to modify remote setpoint
BA2	Load indicator at current input
BA3	Device with current output for remote modulation
BP	Pressure probe
BP1	Pressure probe
BT3	Probe Pt100, 3 wires
BT4	Probe Pt100, 3 wires
BT5	PT 1000 probe, 2 wires
BV	Output probe in voltage
BV1	Output devicein voltage to modify remote setpoint
BV2	Device with voltage current output for remote modulation
F1	Fan motor thermal relay
F2	Pump motor thermal relay
F3	Auxiliary fuse
H1	Light signalling burner on
H2	Light signalling fan motor lockout and pump motor
H3	Heat request lighting signal
H4	Burner working lighting signal
KL1	Star/triangle starter line contactor and direct start-up
KMP	Pump motor contact maker
KT1	Star/triangle starter triangle contactor
KS1	Start/triangle starter star contactor
KST1	Star/triangle starter timer
K3	Clean contacts output relay burner lockout
K4	Output relay for light oil operation clean contacts
K5	Output relay for gas operation clean contacts
K6	Clean contacts for gas output relay burner switched on
K7	Output relay for 'light oil burner on' clean contacts
MP	Pump motor
MV	Fan motor
PA	Air pressure switch
PE	Burner earth
PGMax	Maximum gas pressure switch
PGMin	Minimum gas pressure switch
PGVP	Pilot valves gas pressure switch
PO	Oil pressure switch
PO1	Maximum oil pressure switch on return line
QRI	Flame sensor
RS	Remote burner reset button
S1	Emergency stop button
S2	0 / AUTO selector
S5	Fuel selector and enable signal to remote fuel selector
SH3	Burner reset button and lock-out signal
SM1	Servomotor
SM2	Fuel servomotor
SV	Remote safety light oil valve
TA	Ignition transformer
TL	Limit thermostat/pressure switch
TR	Adjustment thermostat/pressure switch
TS	Safety thermostat/pressure switch
T1	Control box transformer
VF	Light oil operation valve
VP1	Pilot valve 1
VP2	Pilot valve 2
VR	Light oil return valve
VR1	Light oil return valve
VS	Safety light oil valve
VU	Nozzle valve
XAZL	AZL display connector
XAUX	Auxiliary terminal board
XGD	Derivation unit connector
XPGM	Maximum gas pressure switch connector
XPO	Oil pressure switch connector
XPO1	Oil return pressure switch connector
XS	Flame sensor connector
XSM	Servomotor connector
X1	Main terminal supply board
X4	Derivation unit terminal board
X10	Kit terminal board
Y	Gas adjustment valve + gas safety valve

RIELLO S.p.A.
I-37045 Legnago (VR)
Tel.: +39.0442.630111
http:// www.riello.it
http:// www.riello.com

Subject to modifications