spares & parts online
IBASIS.co.uk©

ENSURE THAT THESE INSTRUCTIONS ARE LEFT FOR THE USER AFTER COMPLETION OF THE BENCHMARK SECTION

Format C

Installation and servicing instructions

GAS safe REGISTER
199838

benchmark COLLECTIVE MARK
THE MARK OF QUALITY FOR THE INSTALLATION, COMMISSIONING AND SERVICING OF DOMESTIC HEATING AND HOT WATER SYSTEMS

WRAS APPROVED PRODUCT

Please read the Important Notice within this guide regarding your boiler warranty

sime®

IMPORTANT NOTICE

For the first year all of our appliances are protected by our manufacturer's guarantee which covers both parts and labour.
As you would expect from Sime Ltd, it is our aim to provide our valued customers with the best in after sales and service.
To take advantage of any extended warranty offered, all you have to do is to adhere to these 3 simple conditions:

- The installation must be carried out to Manufacturers/Benchmark Standards by a Gas Safe Registered Engineer, and recorded in the installation manual.

- The appliance must be registered with both Sime Ltd and Gas Safe within 30 days of installation.

- The appliance must be serviced annually, by either Sime Ltd or a Gas Safe registered engineer- ensuring that the Benchmark service record in the installation manual is completed.

Failure to comply with the above will result in only the 12 month warranty being offered.
In the absence of any proof of purchase, the 12 month warranty period will commence from the date of manufacture of the boiler as shown on the appliance data plate.

All descriptions and illustrations provided in this manual have been carefully prepared but we reserve the right to make changes and improvements in our products that may affect the accuracy of the information contained in this manual.

Code Of Practice

For the installation, commissioning and servicing of domestic heating and hot water products

Benchmark places responsibilities on both manufacturers and installers.* The purpose is to ensure that customers** are provided with the correct equipment for their needs, that it is installed, commissioned and serviced in accordance with the manufacturer's instructions by competent persons and that it meets the requirements of the appropriate Building Regulations. Installers are required to carry out work in accordance with the following:

Standards of Work

- Be competent and qualified to undertake the work required.
- Install, commission, service and use products in accordance with the manufacturer's instructions provided.
- Ensure that where there is responsibility for design work, the installation is correctly sized and fit for purpose.
- Meet the requirements of the appropriate Building Regulations. Where this involves notifiable work be a member of a Competent Persons Scheme or confirm that the customer has notified Local Authority Building Control (LABC), prior to work commencing.
- Complete all relevant sections of the Benchmark Checklist/Service Record when carrying out commissioning or servicing of a product or system.
- Ensure that the product or system is left in a safe condition and, whenever possible, in good working order.
- Highlight to the customer any remedial or improvement work identified during the course of commissioning or servicing work.
- Refer to the manufacturer's helpline where assistance is needed.
- Report product faults and concerns to the manufacturer in a timely manner.

Customer Service

- Show the customer any identity card that is relevant to the work being carried out prior to commencement or on request.
- Give a full and clear explanation/demonstration of the product or system and its operation to the customer.
- Hand over the manufacturer's instructions, including the Benchmark Checklist, to the customer on completion of an installation.
- Obtain the customer's signature, on the Benchmark Checklist, to confirm satisfactory demonstration and receipt of manufacturer's instructions.
- Advise the customer that regular product servicing is needed, in line with manufacturers' recommendations, to ensure that safety and efficiency is maintained.
- Respond promptly to calls from a customer following completion of work, providing advice and assistance by phone and, if necessary, visiting the customer.
- Rectify any installation problems at no cost to the customer during the installer's guarantee period.

benchmark COLLECTIVE MARK
THE MARK OF QUALITY FOR THE INSTALLATION, COMMISSIONING AND SERVICING OF DOMESTIC HEATING AND HOT WATER SYSTEMS

*The use of the word "installer" is not limited to installation itself and covers those carrying out installation, commissioning and/or servicing of heating and hot water products, or the use of supporting products (such as water treatment or test equipment).
**Customer includes householders, landlords and tenants.

© Heating and Hotwater Industry Council (HHIC)

The Benchmark Scheme

Sime Ltd is a licensed member of the Benchmark Scheme which aims to improve the standards of installation and commissioning of domestic heating and hot water systems in the UK and to encourage regular servicing to optimise safety, efficiency and performance.

Benchmark is managed and promoted by the Heating and Hotwater Industry Council.
For more information visit www.centralheating.co.uk

CE IPX4D

Format 80 C:
Gas Council number 47-719-12

Format 100 C:
Gas Council number 47-719-13

Format 110 C:
Gas Council number 47-719-21

These appliances comply with the S.E.D.B.U.K. scheme, band "D"

Important Information
IT IS A STATUTORY REQUIREMENT THAT ALL GAS APPLIANCES ARE INSTALLED BY COMPETENT PERSONS, IN ACCORDANCE WITH THE GAS SAFETY (INSTALLATION AND USE) REGULATIONS (CURRENT EDITION). The manufacturer's instructions must not be taken as overriding any statutory requirements, and failure to comply with these regulations may lead to prosecution.

No modifications to the appliance should be made unless they are fully approved by the manufacturer.

GAS LEAKS: DO NOT OPERATE ANY ELECTRICAL SWITCH, OR USE A NAKED FLAME. TURN OFF THE GAS SUPPLY AND VENTILATE THE AREA BY OPENING DOORS AND WINDOWS CONTACT THE GAS EMERGENCY SERVICE ON 0800111999.

benchmark
COLLECTIVE MARK
THE MARK OF QUALITY FOR THE INSTALLATION, COMMISSIONING AND SERVICING OF DOMESTIC HEATING AND HOT WATER SYSTEMS

Please refer to commissioning instructions for filling in the checklist of this installation guide.

Note: All Gas Safe registered installers carry a ID Card.
You can check your installer is Gas Safe Registered by calling 0800 408 5577

SIME COMBINATION BOILERS
Installer checklist

Please remember to carry out the following checks after installation. This will achieve complete customer satisfaction, and avoid unnecessary service calls. A charge will be made for a service visit where the fault is not due to a manufacturing defect.

- Has a correct by-pass been fitted and adjusted?
- Has the system been flushed in accordance with the guidelines given in BS7593 "Treatment of water in domestic hot water central heating systems"?
- Is the system and boiler full of water, and the correct pressure showing on the pressure gauge?
- Is the Auto Air Vent open?
- Has the pump been rotated manually?
- Is the gas supply working pressure correct?
- Is the boiler wired correctly? (See installation manual).
- Has the D.H.W. flow rate been set to the customer requirements?
- Has the customer been fully advised on the correct use of the boiler, system and controls?
- Has the log book provided been completed?

CONTENTS

1 TECHNICAL FEATURES AND DIMENSIONS

1.1 INTRODUCTION 8
1.2 DIMENSIONAL DETAILS
1.3 GENERAL DATA 8
1.4 HYDRAULIC CIRCUIT 10
1.5 INTERNAL VIEW 11
1.6 BOILER OPERATION

2 GENERAL REQUIREMENTS FOR INSTALLATION

2.1 STATUTORY REQUIREMENTS 12
2.2 BOILER POSITION
2.3 FLUE TERMINAL POSITION
2.4 VENTILATION REQUIREMENTS 13
2.5 GAS SUPPLY
2.6 ELECTRICITY SUPPLY
2.7 EXTERNAL CONTROLS
2.8 WATER SYSTEMS - GENERAL
2.9 REQUIREMENTS FOR SEALED WATER SYSTEMS
2.10 D.H.W. SYSTEMS 15

3 INSTALLING THE BOILER

3.1 FIXING THE WALL MOUNTING BRACKET 16
3.2 HANGING THE BOILER
3.3 FLUE DUCTS PREPARATION
3.4 FLUE AND TERMINAL INSTALLATION 17
3.5 SEPARATE DUCTS 19
3.6 WATER CONNECTIONS 20
3.7 GAS CONNECTIONS
3.8 SAFETY VALVE CONNECTION
3.9 WIRING INSTRUCTIONS

4 COMMISSIONING AND TESTING (including BENCHMARK)

4.1 FILLING THE WATER SYSTEM 22
4.2 COMMISSIONING THE BOILER
4.3 SETTING THE C.H. INPUT
4.4 SETTING THE D.H.W. FLOWRATE 23
4.5 FINAL CHECKS
4.6 USER'S INSTRUCTIONS

5 ROUTINE SERVICING INSTRUCTIONS

5.1 MAIN BURNER ASSEMBLY 26
5.2 FAN ASSEMBLY
5.3 HEAT EXCHANGER
5.4 WATER FLOW SWITCH
5.5 CHIMNEY SWEEP FUNCTION 27
5.6 RE-ASSEMBLY
5.7 RE-COMMISSIONING
5.8 CLEANING THE C.H. WATER FILTER

6 FAULT FINDING

6.1 EARTH CONTINUITY CHECK 28
6.2 SHORT CIRCUIT CHECK
6.3 POLARITY CHECK
6.4 RESISTANCE TO EARTH CHECK
6.5 FAULT FINDING LEDS
6.6 C.H. MODE - FAULT FINDING 29
6.7 D.H.W. MODE - FAULT FINDING 30

7 WIRING & FUNCTIONAL DIAGRAM

7.1 ILLUSTRATED FLOW WIRING DIAGRAM 31

8 REPLACEMENT OF PARTS

8.1 HEAT EXCHANGER 32
8.2 COMBUSTION CHAMBER INSULATION
8.3 FAN ASSEMBLY
8.4 MAIN BURNER
8.5 IGNITION/DETECTION ELECTRODE
8.6 GAS VALVE
8.7 AIR PRESSURE SWITCH 33
8.8 OVERHEAT THERMOSTAT
8.9 THERMISTOR
8.10 DRIVER PCB
8.11 PUMP MOTOR
8.12 D.H.W. HEAT EXCHANGER
8.13 DIVERTOR VALVE - COMPLETE 34
8.14 DIVERTOR VALVE - MICROSWITCH ASSEMBLY
8.15 C.H. EXPANSION VESSEL
8.16 PRESSURE/TEMPERATURE GAUGE
8.17 SAFETY VALVE
8.18 AUTOMATIC AIR VENT
8.19 TIME CLOCK

9 EXPLODED VIEWS 35

1 TECHNICAL FEATURES AND DIMENSIONS

1.1 INTRODUCTION

The Sime **"FORMAT C"** are wall mounted, fan assisted balanced flue combination boilers.
The appliance is supplied suitable for use with natural gas, L.P.G. and provide central heating and instantaneous production of D.H.W. Heat output is varied according to demand by the modulating gas control on both D.H.W. and C.H.
The appliance is supplied with a telescopic air/flue duct suitable for wall thicknesses up to 635 mm (25 in) although extension duct kits are available (see details in section 3.4).
The combined flue and air duct can exit the boiler from either side or from the rear of the appliance. A vertical extension and additional flue elbow may be fitted. If required, the boilers can also be fitted with a separate flues kit (see section 3 for details). The boiler is designed for use with sealed primary water systems and is supplied fully assembled and equipped with complete valve packs.

The boiler can be used with a 24V room thermostat (class II according to EN 60730.1). This booklet provides instructions for the boiler models: **"FORMAT 80 C"** - **"FORMAT 100 C"** - **"FORMAT 110 C"** with following features:
- electronic ignition,
- fully modulating,
- built in mechanical time clock.

1.2 DIMENSIONAL DETAILS

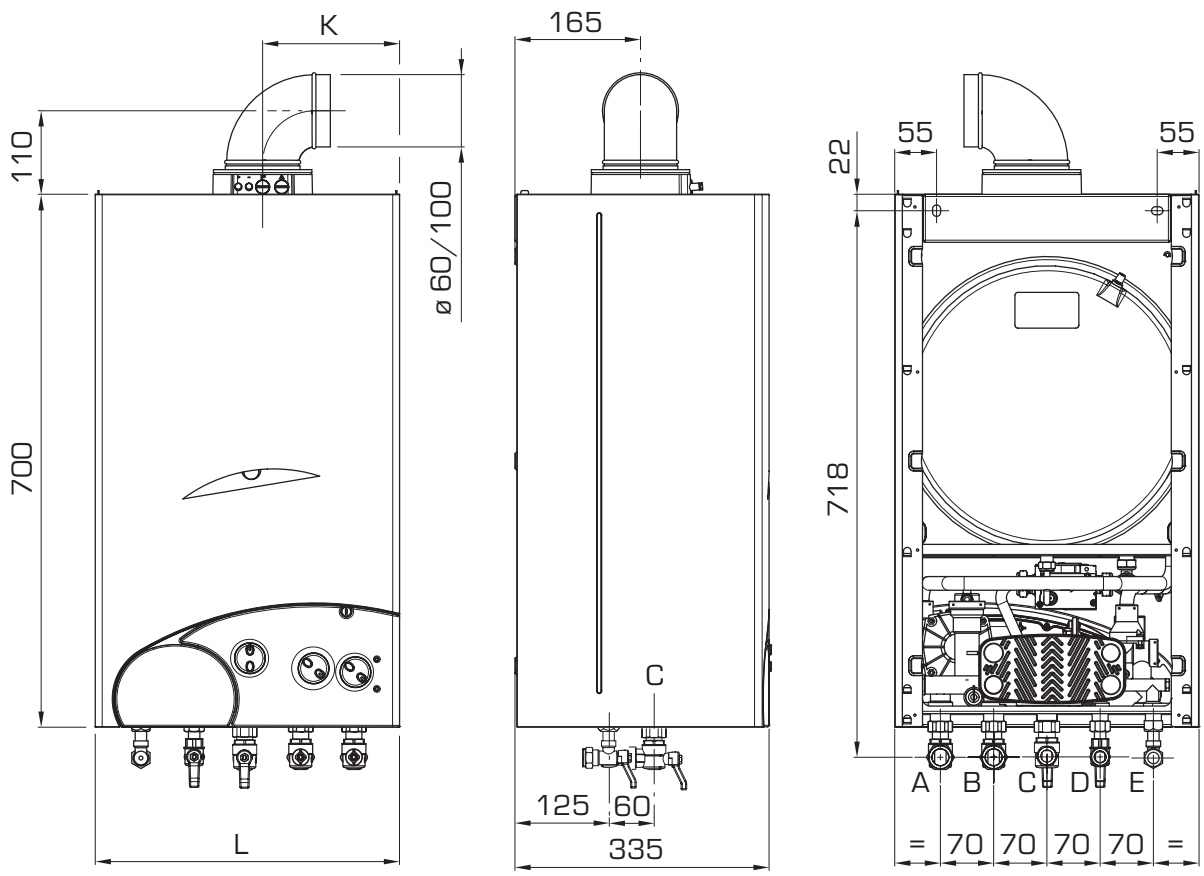

	80 C	100 C	110 C
L mm	400	450	450
K mm	180	205	205

Fig. 1

TABLE 1 - Connections

A	**C.H. return**	22 mm	Compression
B	**C.H. flow**	22 mm	Compression
C	**Gas connection**	15 mm	Compression
D	**Cold water**	15 mm	Compression
E	**Hot water**	15 mm	Compression

TABLE 2 - Minimum clearances

	For ventilation	For servicing
ABOVE THE APPLIANCE CASING	200 mm	300 mm
AT THE R.H.S.	15 mm	15 mm
AT THE L.H.S.	15 mm	15 mm
BELOW THE APPLIANCE CASING	200 mm	200 mm
IN FRONT OF THE APPLIANCE	350 mm	500 mm

1.3 GENERAL DATA

TABLE 3a - Nominal boiler ratings (5 minutes after lighting) for "FORMAT 80 C"

MODE		OUTPUT		INPUT (G.C.V.)		BURNER PRESS. (Nat. gas)		BURNER PRESS. (Butane/Propane)	
		kW	Btu/h	kW	Btu/h	mbar	inwg	mbar	inwg
CENTRAL HEATING RANGE		9.0	31,000	12.0	42,000	2.4	0.9	5.9/7.7	2.4/3.1
		10.6	36,000	14.1	48,000	3.2	1.3	7.9/10.3	3.2/4.1
		12.3	42,000	16.2	55,000	4.1	1.7	10.2/13.2	4.1/5.3
		14.1	48,000	18.2	62,000	5.2	2.1	12.7/16.3	5.1/6.5
	X* (G20-G31)	15.9	54,000	20.3	69,000	6.3	2.5	15.4/19.6	6.2/7.9
	X* (G30)	17.7	60,000	22.4	76,000	7.5	3.0	18.4/23.2	7.4/9.3
		19.6	67,000	24.5	84,000	8.9	3.6	21.5/26.9	8.6/10.8
		21.5	73,000	26.6	90,000	10.3	4.1	24.8/30.8	10.0/12.4
		23.4	80,000	28.7	98,000	11.8	4.7	28.5/36.5	11.4/14.7
DOMESTIC HOT WATER	Max.	23.4	80,000	28.7	98,000	11.8	4.7	28.5/36.5	11.4/14.7
	Min.	9.0	31,000	12.0	42,000	2.4	0.9	5.9/7.7	2.4/3.1

* Factory setting

TABLE 3b - Nominal boiler ratings (5 minutes after lighting) for "FORMAT 100 C"

MODE		OUTPUT		INPUT (G.C.V.)		BURNER PRESS. (Nat. gas)		BURNER PRESS. (Butane/Propane)	
		kW	Btu/h	kW	Btu/h	mbar	inwg	mbar	inwg
CENTRAL HEATING RANGE		11.4	39,000	15.0	51,000	2.6	1.0	5.5/7.1	2.2/2.9
		13.5	46,000	17.5	60,000	3.5	1.4	7.4/9.4	3.0/3.8
		15.6	53,000	20.0	68,000	4.5	1.8	9.7/12.1	3.9/4.8
		17.7	60,000	22.5	77,000	5.6	2.3	12.2/14.9	4.9/6.0
	X* (G20-G31)	19.8	68,000	25.0	86,000	6.8	2.7	14.9/18.0	6.0/7.2
	X* (G30)	22.0	75,000	27.6	94,000	8.2	3.3	17.9/21.3	7.2/8.6
		24.2	83,000	30.1	103,000	9.6	3.8	21.2/24.8	8.5/10.0
		26.5	90,000	32.6	111,000	11.1	4.5	24.7/28.5	9.9/11.4
		28.8	98,000	35.1	120,000	12.7	5.1	28.5/36.5	11.4/14.7
DOMESTIC HOT WATER	Max.	28.8	98,000	35.1	120,000	12.7	5.1	28.5/36.5	11.4/14.7
	Min.	11.4	39,000	15.0	51,000	2.6	1.0	5.5/7.1	2.2/2.9

* Factory setting

TABLE 3c - Nominal boiler ratings (5 minutes after lighting) for "FORMAT 110 C"

MODE		OUTPUT		INPUT (G.C.V.)		BURNER PRESS. (Nat. gas)		BURNER PRESS. (Butane/Propane)	
		kW	Btu/h	kW	Btu/h	mbar	inwg	mbar	inwg
CENTRAL HEATING RANGE		11.2	38,000	15.0	51,000	2.2	0.9	4.5/5.8	1.8/2.3
		13.6	46,000	17.9	61,000	3.1	1.3	6.4/8.2	2.6/3.3
		16.0	55,000	20.9	72,000	4.2	1.7	8.5/11.0	3.4/4.4
		18.5	63,000	23.9	81,000	5.4	2.2	11.0/14.1	4.4/5.7
	X* (G20-G31)	21.0	72,000	26.8	92,000	6.8	2.7	13.7/17.6	5.5/7.1
	X* (G30)	23.6	80,000	29.8	101,000	8.3	3.3	16.7/21.4	6.7/8.6
		26.2	89,000	32.7	111,000	10.0	4.0	20.0/25.6	8.0/10.3
		28.9	99,000	35.7	122,000	11.8	4.7	23.5/30.0	9.4/12.0
		31.6	108,000	38.6	132,000	13.7	5.5	28.2/36.2	11.3/14.5
DOMESTIC HOT WATER	Max.	31.6	108,000	38.6	132,000	13.7	5.5	28.2/36.2	11.3/14.5
	Min.	11.2	38,000	15.0	51,000	2.2	0.9	4.5/5.8	1.8/2.3

* Factory setting

TABLE 4 - General specifications

			80 C	100 C	110 C
Main burner injectors	No off		12	14	15
	Dia for Natural gas	mm	1.3	1.3	1.3
	Dia for LPG	mm	0.77	0.78	0.80
Water capacity		l (gal)	3.4 (0.75)	4.7 (1.00)	4.7 (1.00)
Minimum water flow	D.H.W.	l/min (gal/min)	2 (0.5)	2 (0.5)	2 (0.5)
D.H.W. flow rate					
at a temperature rise of	30°C	l/min (gal/min)	11.2 (2.5)	13.8 (3.0)	15.1 (3.3)
	35°C	l/min (gal/min)	9.6 (2.1)	11.9 (2.6)	12.9 (2.8)
Static head	Minimum	bar (psi)	0.5 (7.3)	0.5 (7.3)	0.5 (7.3)
	Maximum	bar (psi)	3.0 (43.5)	3.0 (43.5)	3.0 (43.5)
D.H.W. pressure	Minimum	bar (psi)	1.0 (14.6)	1.0 (14.6)	1.0 (14.6)
	Maximum	bar (psi)	6.0* (87)	6.0* (87)	6.0* (87)
Weight	Empty	kg (lb)	38 (84)	40 (88)	40 (88)
	Total (full)	kg (lb)	41.4 (91)	44.7 (98)	44.7 (98)
Electrical supply			230 V - 50 Hz, Fused at 3 A		
Internal fuse			Line: F 1.6 A		
Maximum power consumption		Watt	150	160	160
Maximum gas consumpt. (Natural gas)		m^3/h (ft^3/h)	2.73 (96)	3.34 (118)	3.68 (130)
Maximum gas consumpt. (Butane - Propane)		kg/h (lb/h)	2.02 - 1.99 (4.45 - 4.39)	2.48 - 2.44 (5.47 - 5.38)	2.74 - 2.70 (6.04 - 5.95)
Max. working temperature		°C (F)	95 (203)	95 (203)	95 (203)
Integral exp. vessel capacity		l (gal)	8 (1.76)	8 (1.76)	8 (1.76)

* For greater pressures it is necessary to install a pressure reducer in the inlet of D.H.W.

1.4 HYDRAULIC CIRCUIT

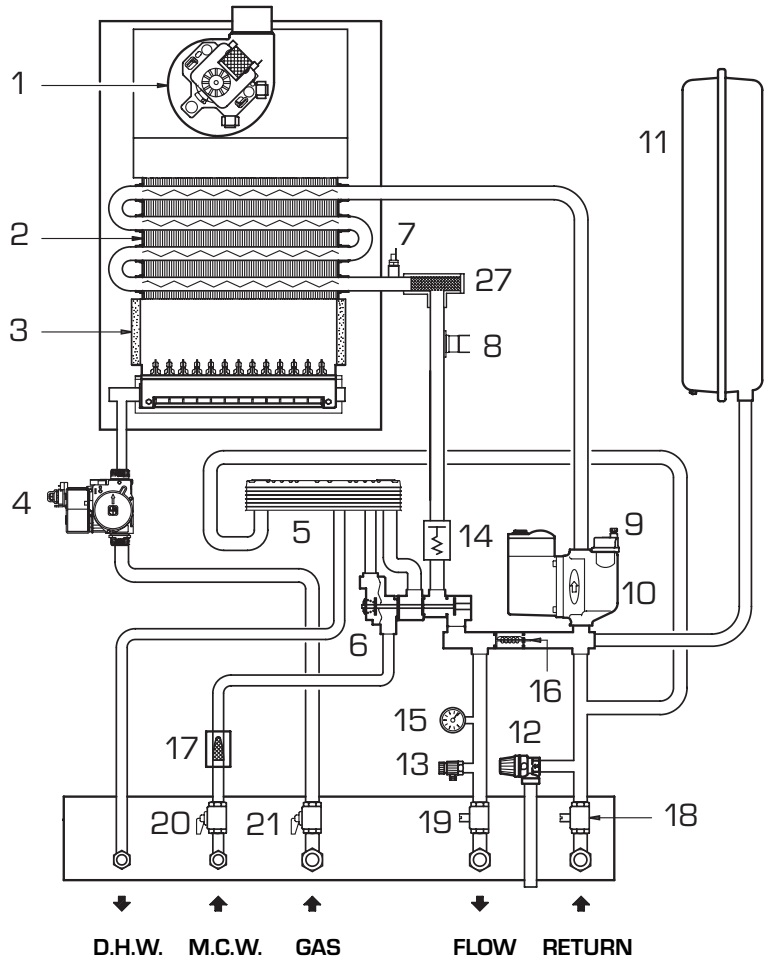

KEY
1 Fan
2 Water-gas exchanger
3 Combustion chamber
4 Gas valve
5 D.H.W. exchanger
6 Divertor valve
7 NTC sensor
8 100°C safety stat
9 Air relief valve
10 Circulation pump
11 Expansion vessel
12 Safety valve
13 Drain plug
14 Water flow switch
15 Temperature and pressure gauge
16 Automatic by-pass
17 D.H.W. filter
18 C.H. return cock
19 C.H. flow cock
20 D.H.W. cock
21 Gas cock
27 C.H. water filter

Fig. 2

1.5 INTERNAL VIEW

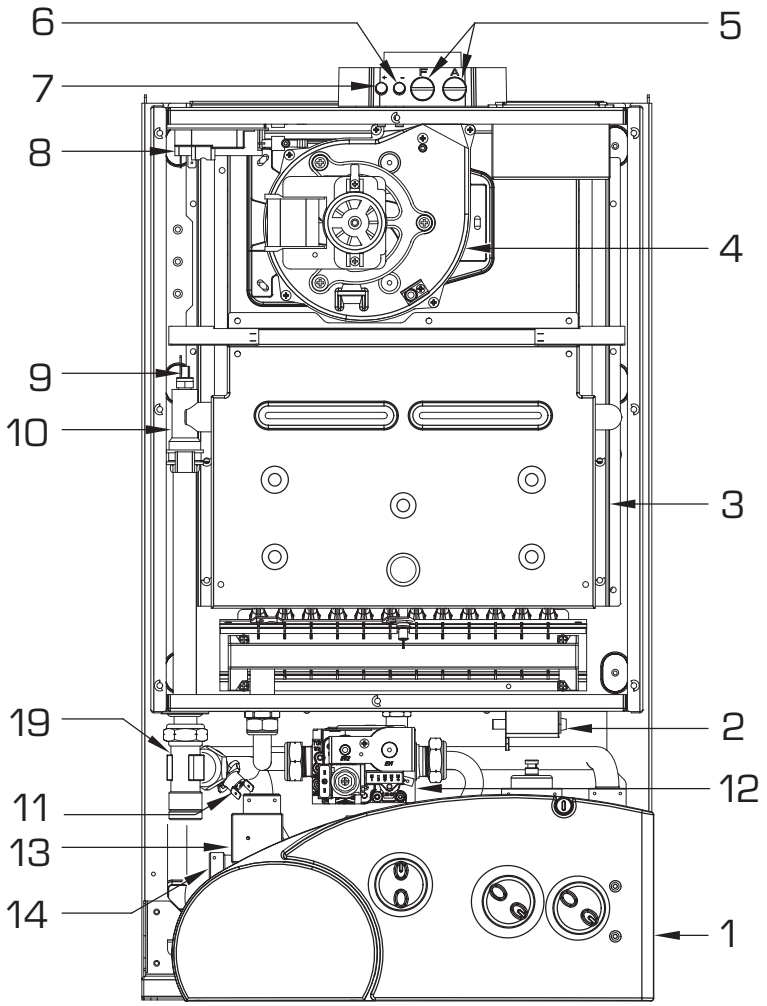

KEY
1 Control panel
2 Ignition transformer
3 Combustion chamber
4 Fan
5 Combustion analysis intakes
6 Negative pressure intake
7 Positive pressure intake
8 Air pressure switch
9 C.H. sensor (SM)
10 Main exchanger
11 100°C safety stat
12 Gas valve
13 Flow water switch
14 Divertor valve
19 C.H. water filter

Fig. 3

1.6 BOILER OPERATION

The boiler operating mode is controlled by the selector switch on the control panel. When set to winter (❄) it will operate in the Domestic Hot Water and Central Heating modes. For Domestic Hot Water only the selector switch should be set to summer (☀).
Domestic hot water supply always takes priority over central heating. If a demand for hot water is required during a central heating period, the boiler will automatically switch to hot water mode until the demand is satisfied.

1.6.1 Central Heating mode

If there is a call for central heating the pump will start to circulate the primary heating water and the fan will run at full speed; once the air pressure switch has been proved the burner will light. The burner output then automatically adjusts to suit the system demand; as the temperature of the heating water in the boiler approaches that set by the adjustable central heating control knob the burner output is reduced. When this set temperature is reached, the burner extinguishes and the fan stops.
The pump continues to run for 30 seconds to prevent residual heat build up in the boiler. The burner will not relight for 3 minutes unless there is a demand for domestic hot water during this period.

1.6.2 Domestic Hot Water mode

When there is a demand for hot water, the diverter valve operates and the pump circulates the primary heating water. The fan will run at full speed; once the air pressure switch has been proved the burner will light.
The burner output then automatically adjusts to suit the demand required to raise the temperature set by the adjustable domestic hot water control knob.
When the hot water demand has been satisfied, the diverter valve operates
to divert the primary heating water to the central heating, if the selector is set to winter (❄) and there is a C.H. demand, otherwise the burner will extinguish.

2 GENERAL REQUIREMENTS FOR INSTALLATION

2.1 STATUTORY REQUIREMENTS

GAS SAFETY (INSTALLATION AND USE) REGULATIONS (as amended). It is the law that all gas appliances are installed by a registered person, in accordance with the above regulations. Failure to install appliances correctly could lead to prosecution. It is in your own interest, and that of safety, to ensure that the law is complied with.
In addition to the above regulations, this appliance must be installed in accordance with the current IEE Wiring Regulations (BS 7671), Local Building Regulations, the Building Standards (Scotland) (Consolidation) Regulations, Byelaws of the local water undertaking, and Health and Safety Document No 635 "The Electricity at Work Regulations 1989". It should also be in accordance with the relevant recommendations in the current editions of the following British Standards and Codes of Practice: BS5449, BS5546, BS5440:1, BS5440:2, BS6798, BS6891, and BG.DM2, BS7074, and BS5482 for propane installations.

Manufacturer's instructions must NOT be taken in any way as over-riding statutory obligations.

2.2 BOILER POSITION

In siting the combination boiler, the following limitations MUST be observed:
- The boiler is not suitable for external installation. The position selected for installation should be within the building, unless otherwise protected by a suitable enclosure, and MUST allow adequate space for installation, servicing, and operation of the appliance, and for air circulation around it (section 2.4).
- This position MUST allow for a suitable flue termination to be made. The combination boiler must be installed on a flat vertical wall which is capable of supporting the weight of the appliance, and any ancillary equipment.
- If the combination boiler is to be fitted in a timber framed building it should be fitted in accordance with the Institute of Gas Engineers document for Gas Installations In Timber Frame Housing, Reference 16E/UP/7: 1998. If in doubt, advice must be sought from the gas supplier.
- If the appliance is installed in a room containing a bath or shower, any electrical switch or control utilising mains electricity must be so situated that it cannot be touched by a person using the bath or shower. Attention is drawn to the requirements of the current I.E.E. Wiring Regulations (BS 7671), and in Scotland the electrical provisions of the Building Regulations applicable in Scotland.

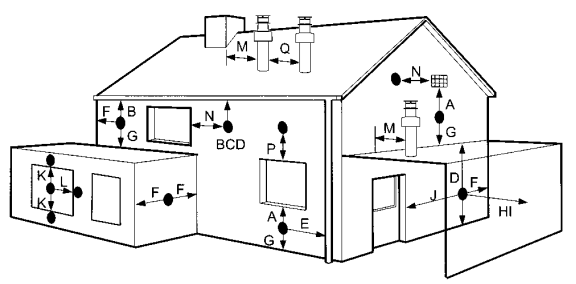

Fig. 4

- A compartment used to enclose the appliance MUST be designed and constructed specifically for this purpose. An existing cupboard, or compartment, may be used provided it is modified accordingly.
- Where installation will be in an unusual location, special procedures may be necessary. BS6798 gives detailed guidance on this aspect.

2.3 FLUE TERMINAL POSITION

Detailed recommendations for flue installation are given in BS5440:1. The following notes are for general guidance:
- The boiler MUST be installed so that the terminal is exposed to the external air.
- It is important that the position of the terminal allows free passage of air across it at all times.
- It is ESSENTIAL TO ENSURE, in practice that products of combustion discharging from the terminal cannot re-enter the building, or any other adjacent building, through ventilators, windows, doors, other sources of natural air infiltration, or forced ventilation/air conditioning. If this does occur, the appliance MUST be turned OFF IMMEDIATELY and the gas supplier consulted.
- **The minimum acceptable dimensions from the terminal to obstructions and ventilation openings are specified in fig. 4.**
- If the terminal discharges into a pathway or passageway check that combustion products will not cause nuisance and that the terminal will not obstruct the passageway.
- Where the lowest part of the terminal is fitted less than 2 m (78 in) above ground, above a balcony or above a flat roof to which people have access, the terminal MUST be protected by a purpose designed guard.
- Where the terminal is fitted within 850 mm (34 in) of a plastic or painted gutter, or 450 mm (18 in) of painted eaves, an aluminium shield at least 1,500 mm (59 in) long must be fitted to the underside of the painted surface.
- The air inlet/outlet flue duct MUST NOT be closer than 25 mm (1 in) to combustible material.
- In certain weather conditions the terminal may emit a plume of steam. This is normal but positions where this would cause a nuisance should be avoided.

TABLE 5

Terminal position		Minimum spacing in mm
A	Directly below an openable window, air vent or any other ventilation opening	300
B	Below guttering, drain pipes or soil pipes	25*
C/D	Below eaves, balconies or carport roof	25*
E	From vertical drain pipes or soil pipes	75
F	From internal or external corners	25
G	Above adjacent ground, roof or balcony level	300
H	From a surface facing the terminal	600
I	From a terminal facing the terminal	1,200
J	From an opening in the carport (e.g. door, window into dwelling)	1,200
K	Vertically from a terminal on the same wall	1,500
L	Horizontally from a terminal on the same wall	300
M	Horizontally from a vertical terminal to a wall	300
N	Horizontally from an openable window or other opening	300
P	Above an openable window or other opening	300

* With "heat shield" installed in accordance to BS 5440 Pt1.

2.4 VENTILATION REQUIREMENTS

Detailled recommendations for air supply are given in BS5440:2. The following notes are for general guidance:

- It is not necessary to have a purpose provided air vent in the room or compartment in which the appliance is installed.

2.5 GAS SUPPLY

- The gas installation should be in accordance with BS6891. The gas required for the boiler is specified in *Table 4*.
- Ensure that the pipework from the meter to the appliance is of adequate size.
- The governor at the meter must give a constant outlet pressure of 20 mbar (8 inwg) for natural gas and 30 - 37 mbar (12 - 15 inwg) for LPG, when the appliance is running.
- The gas supply line should be purged.
  NOTE: Before purging open all doors and windows, also extinguish any cigarettes, pipes, and any other naked flames.
- The complete installation must be tested for gas soundness.

2.6 ELECTRICITY SUPPLY

The appliance MUST be earthed. A mains supply of 230 V - 50 Hz single phase is required. All external controls and wiring MUST be suitable for mains voltage.
Wiring should be in 3 core PVC insulated cable NOT LESS than 0.75 mm^2 (24 x 0.2 mm) to BS6500, Table 16. Wiring external to the boiler MUST be in accordance with current I.E.E. Wiring Regulations (BS 7671) and local regulations. The supply connection to the flying lead provided MUST be made to a fused double pole switch, having a 3 mm (1/8 in) contact separation in both poles, serving only the boiler and system controls; the fuse rating should be 3 amp. This connection should be readily accessible and be made adjacent to the boiler (except in the case of bathroom installations for domestic boilers where the point of connection to the mains MUST be outside of the bathroom).

2.7 EXTERNAL CONTROLS (Refer to section 3.9)

The boiler is intended for use with a 24 V room thermostat. The connection is made inside the control box as described in section 3.9.

2.8 WATER SYSTEMS - GENERAL

- This appliance is designed for connection to sealed central heating water systems.
- Check that the mains water pressure is sufficient to produce the required D.H.W. flow rate, but does not exceed the maximum D.H.W. pressure (*Table 4*).
  Where mains pressure exceed 6 bar a pressure reducing valve must be fitted in the D.H.W. inlet.

2.8.1 Treatment of water circulating systems

- All recirculatory systems will be subject to corrosion unless an appropriate water treatment is applied. This means that the efficiency of the system will deteriorate as corrosion sludge accumulates within the system, risking damage to pump and valves, boiler noise and circulation problems.
- For optimum performance after installation this boiler and its associated central heating system must be flushed in accordance with the guidelines given in BS 7593 "Treatment of water in domestic hot water central heating systems".
- This must involve the use of a proprietary cleanser, such as Sentinel X300 or X400, or Fernox Superfloc. Full instructions are supplied with the products, but for immediate information please contact GE Betz (0151 420 9563) or Fernox (01799 550 811) directly.
- For long term protection against corrosion and scale, after flushing it is recommended that an inhibitor such as Sentinel X100, or Fernox MB-1 or Copal is dosed in accordance with the guidelines given in BS 7593.
  Failure to flush and add inhibitor to the system may invalidate the appliance warranty.
- It is important to check the inhibitor concentration after installation, system modification and at every service in accordance with the manufacturer's instructions. (Test kits are available from inhibitor stockists).

2.9 REQUIREMENTS FOR SEALED WATER SYSTEMS

The heating system design should be based on the following information:

a) The available pump head is given in fig. 5.
b) The burner starts when the C.H. flow reaches 400÷450 l/h. This safety condition is ensured by the flow switch.
c) The appliance is equipped with an internal by-pass that operates with system heads (H) greater than 3 m. The maximum flow through the by-pass is about 300 l/h. If thermostatic radiator valves are to be installed, at least one radiator should be without a thermostatic valve (usually the bathroom radiator).
d) A sealed system must only be filled by a competent person using one of the approved methods shown in fig. 7. The system design should incorporate the connections appropriate to one of these methods.
e) The following paragraphs outline the specifications of the items fitted to the boiler.

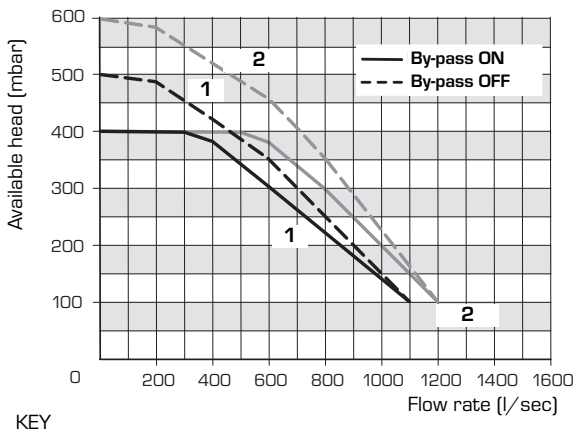

KEY
1 Available Head for **"80 C - 100 C"** models
2 Available Head for **"110 C"** model

Fig. 5

TYPICAL SYSTEM DESIGN

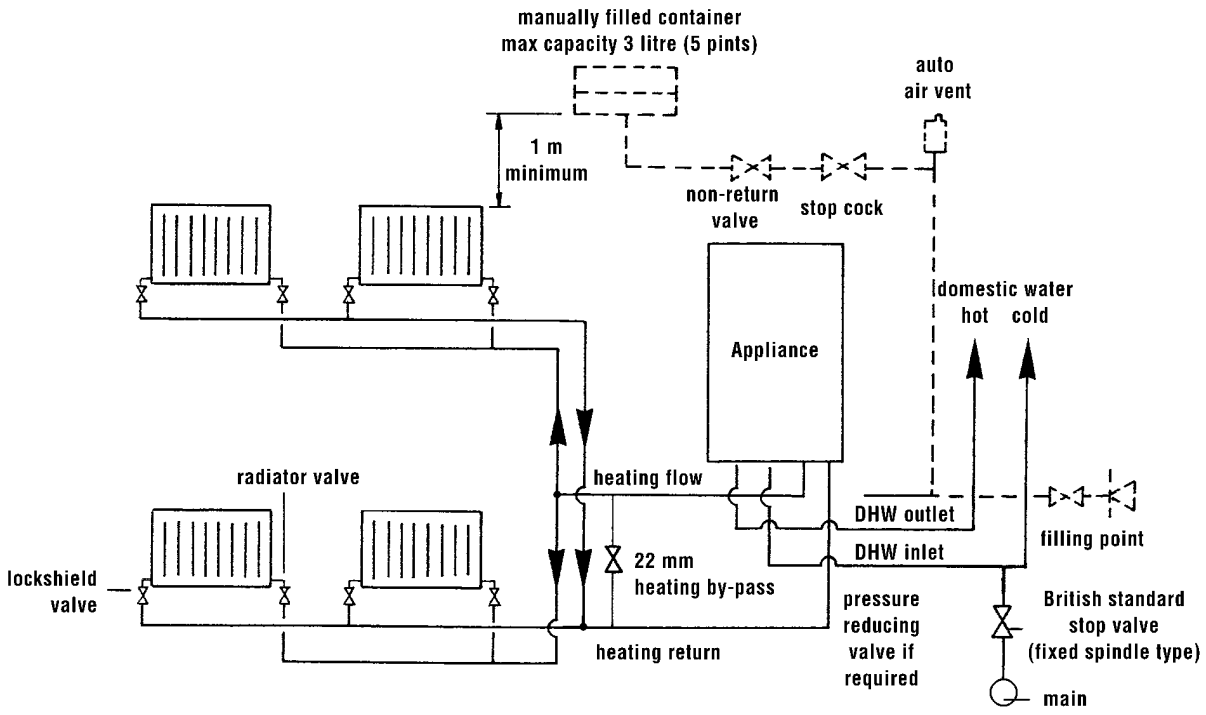

NOTE: A drain cock should be installed at the lowest point of the heating circuit and beneath the appliance.

Fig. 6

ALTERNATIVE METHODS OF FILLING A SEALED SYSTEM

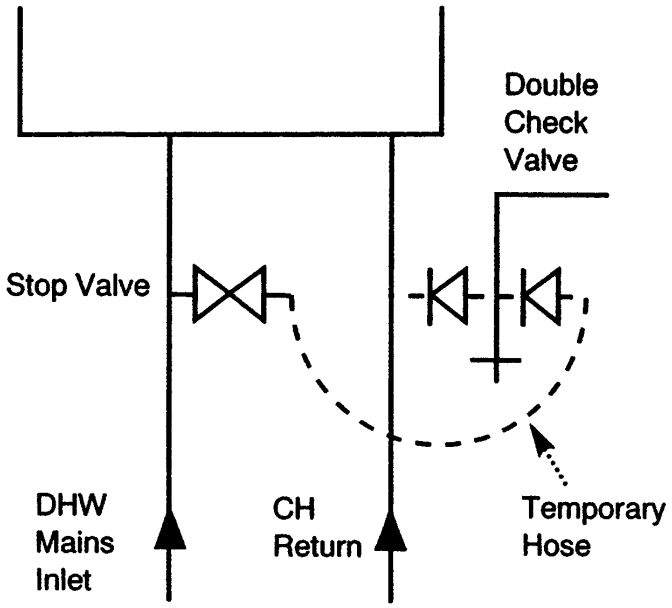

Fig. 7

2.9.1 Pump

The available head shown in fig. 5 is that in excess of the appliance hydraulic resistance, i.e. that available for the system at any given heating load up to the maximum output in C.H. mode. Never reduce the pump speed below maximum as this will reduce D.H.W. output. The pump speed is indicated on the side of the pump speed selector switch (if fitted).

2.9.2 System volume (total water content)

The following Table gives the maximum system volume that the integral expansion vessel can sustain under different charge pressure conditions.
If the system volume exceeds that shown, an additional expansion vessel must be fitted and connected to the heating system primary return pipe as close as possible to the appliance.
If an extra vessel is required, ensure that the total capacity of both vessels is adequate. Further details are available in the current issues of BS5449 and BS6798.

NOTE: If the pressure gauge indicates 2.65 bar or greater when the appliance is at maximum temperature with all radiators in circulation an extra expansion vessel is required.

TABLE 6

Vessel charge and initial system pressure	bar psi	0.5 7.3	1.0 14.5	1.5 21.8
Total water content of system using 8 l (1.76 gal) capacity expansion vessel supplied with appliance	l gal	96 21.1	74 16.2	51 11.2
For systems having a larger capacity multiply the total system capacity in litres (gal) by the factor to obtain the total minimum expansion vessel capacity required litres (gal)		.0833	.109	.156

2.9.3 Pressure gauge

A pressure gauge is mounted on the appliance facia panel.

2.9.4 Safety valve

A safety valve set at 3 bar (43.5 psi) is fitted to the appliance and a discharge pipe is routed to outside of the appliance. This discharge pipe should be extended to terminate safely away from the appliance and where a discharge would not cause damage to persons or property but would be detected. The pipe should be able to withstand boiling water, be a minimum of 15 mm in diameter, and installed with a continuous fall.

2.10 D.H.W. SYSTEMS

- Check that the mains supply pressure is within the prescribed limits (*Table 4*).
  If necessary, a pressure reducing valve should be fitted to the mains supply before the D.H.W. inlet connection.
- A maximum D.H.W. flow rate of: 10.3 l/m (2.3 gpm) for **"FORMAT 80 C"**, 13 l/m (2.9 gpm) for **"FORMAT 100 C"** and 14 l/m (3.1 gpm) for **"FORMAT 110 C"** is recommended. Higher flow rates will not damage the appliance but may lower the water temperature below an acceptable level.
- If the appliance is installed in an area where the temporary hardness of the water supply is high, say over 150 ppm, the fitting of an in line scale inhibitor may be an advantage. Consult the Local Water Undertaking if in doubt.
- Devices capable of preventing the flow of expansion water: e.g. non return valves and/or loose-jumpered stop cocks should not be fitted unless separate arrangements are made for expansion water.
- For specific information relating to fittings (eg. Showers, washing machines etc.) suitable for connection in the D.H.W. circuit, consult the Local Water Undertaking, however the following information is given for guidance.

2.10.1 Domestic hot/cold water supply taps and mixing taps

All equipment designed for use at mains water pressure is suitable.

2.10.2 Showers

Any **WRAS** approved shower suitable for the mains water pressure available may be used.
A loose or flexible shower head type may require the fitting of an anti-syphon device to comply wth water by-laws.

2.10.3 Bidets

Providing that the appliance is of the over-rim flushing type, the outlets are shrouded and it is impossible to attach a temporary hand held spray, no anti syphonage device is necessary.

3 INSTALLING THE BOILER

Appliance package:

- combination boiler (assembled);
- installation and servicing instructions;
- users instructions;
- wall mounting templates (paper);
- wall mounting bracket;
- fixing screws with wall plugs;
- plastic bags containing:
  - gas service cock;
  - C.H. F/R isolation valves;
  - D.H.W. isolation valve;
  - D.H.W. elbow connection;
  - associated fixing screws;
  - associated gaskets;
  - safety valve discharge pipe.

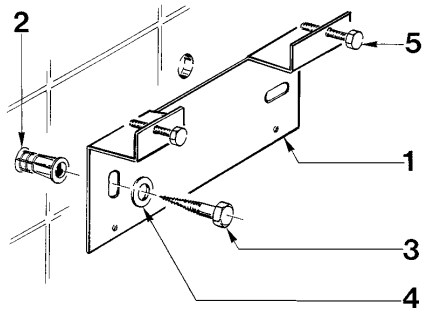

KEY
1 Wall mounting bracket
2 Plastic wall plug (2 Off)
3 Woodscrew (2 Off)
4 Washer (2 Off)
5 Adjustment screw (2 Off)

Fig. 8

3.1 FIXING THE WALL MOUNTING BRACKET

Before installing the appliance ensure that the chosen location is suitable (section 2.2) and that the requirements for flue position, (section 2.3), and minimum clearances, (*Table 2*) are satisfied. These minimum clearances are essential to provide access for servicing, and are included on the wall mounting templates.

- Open the paper wall mounting templates. If a rear flue is to be used, discard the side templates and secure the rear template in the desired position. For a side flue application, secure both the rear and appropriate side template in position.
- Mark the position of the two wall mounting bracket fixing holes and the flue/air duct hole on the appropriate wall(s).
- Remove the template(s) and drill the two fixing holes using a 10 mm masonry drill. Fit the plastic plugs provided.
- Cut the hole in the wall for the flue/air duct. The diameter should not be less than 100 mm (4 in) and must be horizontal. Refer to fig. 12-14.
- Accurately measure the wall thickness, and note this dimension for later use.
- Secure the wall mounting bracket in position using the screws provided. Ensure that it is the correct way up, as indicated in fig. 8.

3.2 HANGING THE BOILER

- Lift the appliance into position. The upper cross member locates onto the wall mounting bracket.
- Screw in the wall mounting bracket adjusting screws until the appliance is secure and vertical.

3.3 FLUE DUCTS PREPARATION

3.3.1 Flue/air duct lenghts

- Determine whether an extension duct is required with reference to the **Z** dimension shown in figs. 10-11.
- If no extension ducts are required, procede to 3.4.
- If an extension duct or ducts is/are to be used, the flue and air ducts should be joined before proceeding to the next section. The extension ducts should be joined to each other and to the standard ducts using the following procedure (fig. 9);

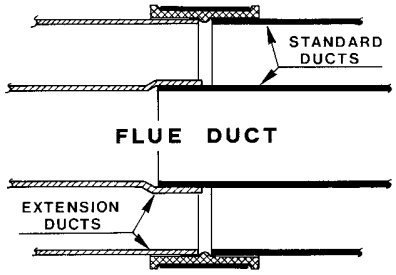

Fig. 9

- For the flue ducts in turn, push the plain end of the standard and (if using two or three extensions) extension duct into the swaged end of the extension duct(s).
- Push an air duct in to the clamp. Join the air ducts (larger ducts) and tighten the screws an the clamp to connect them.

3.3.2 Cutting the flue/air duct extension to the correct length

Rear flue outlet (Only - fig. 10)

- Select the air duct (larger duct) and starting at the formed end, 'mark off' the length to be cut which is the wall thickness **X** + 70 mm.

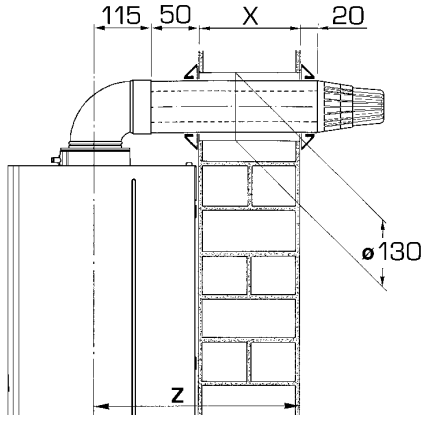

Fig. 10

Side flue outlet (Only - fig. 11)

Right hand side

- Select the air duct (larger duct) and starting at the formed end, 'mark off' the length to be cut which is the wall thickness **X** + the clearance **Y** plus 85 mm for the **"FORMAT 80 C"** model and 110 mm for the **"FORMAT 100 C"** and **"FORMAT 110 C"** models.

Left hand side

- Select the air duct (larger duct) and starting at the formed end, 'mark off' the length to be cut which is the wall thickness **X** + the clearance **Y** plus 125 mm for the **"FORMAT 80 C"** model and 150 mm for the **"FORMAT 100 C"** and **"FORMAT 110 C"** models.

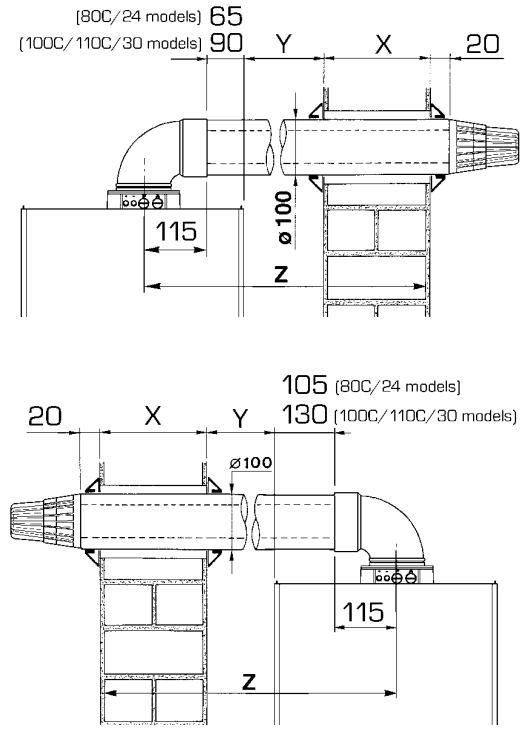

Fig. 11

All installations

- Cut the air duct square to the mark and remove all burrs and sharp edges.
- Hold the air duct at the plain end, and slide the flue duct (small duct) inside the air duct (terminal first) until it stops against the terminal, then mark off the length to be cut which leaves 20 mm protruding flue duct.
- Remove and cut the flue duct square to the mark and remove all burrs and sharp edges.

3.4 FLUE AND TERMINAL INSTALLATION

3.4.1 Telescopic flue

For the assembly follow what is indicated in figure 12:

- Make a hole in the wall sufficiently large to allow an insertion of a PVC pipe 130 mm ø of the same length as the thickness of the wall it has to pass through. Then fix the PVC pipe in place using cement mortar.
- Before to insert the duct in the wall hole fit in position the outer wall seal (D).
- Push the tube outwards until the gasket comes out. Pull the pipe inwards bringing the ring to rest on the wall.
- Slide the inner ring (C).
- Insert the inner/outer duct into the elbow (A) until the ducts touch the inner part of the elbow where the diameter becomes smaller.
- Fit the sponge-rubber gasket (B) to the collar (E).
- Secure the collar (E) to the sealed chamber using the four screws provided.
- Insert the elbow (A) into the collar (E) tightening the screw (F).

NOTE: The air intake-flue outlet assembly must slope slightly downwards to prevent rain water getting into the boiler.

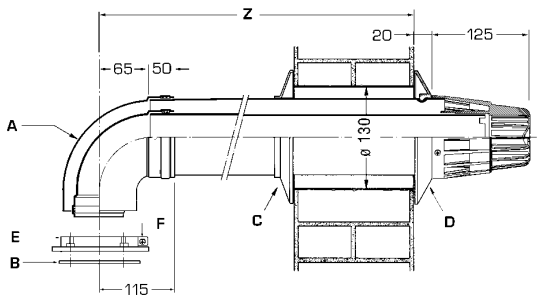

KEY

A Elbow 90°
B Sponge-rubber gasket ø 125/95
C White inner duct
D Grey outer duct
E Junction collar
F Screw

NOTE: The kit can be extended to a maximum measure of 800 mm horizontal.

Fig. 12

3.4.2 Standard flue

- Push the flue duct assembly into the air duct until the external swaged ring on the flue terminal stops against the internal swage on the air duct (fig. 13).
- Fit the rubber sealing ring into the swaged groove in the air duct as shown in fig. 14. Ensure that it is the correct way around.
- From inside or outside the building, slide the duct assembly into the wall until the sealing ring forms a good seal against the outside wall.
- With reference to fig. 14, slide on the aluminium retention ring (D), check that the rubber sealing ring (E) is pulled up to the wall and that the duct assembly is horizontal, then secure the aluminium retention ring to the air duct using the two screws (H) provided. Do not overtighten the screws.
- Push the junction collar (B) over the air duct until the air duct touches the inner part of the collar where the diameter becomes smaller.
- Push the elbow socket into the junction collar and onto the flue duct.
- Fit the jointing clamp (I) over the junction collar.

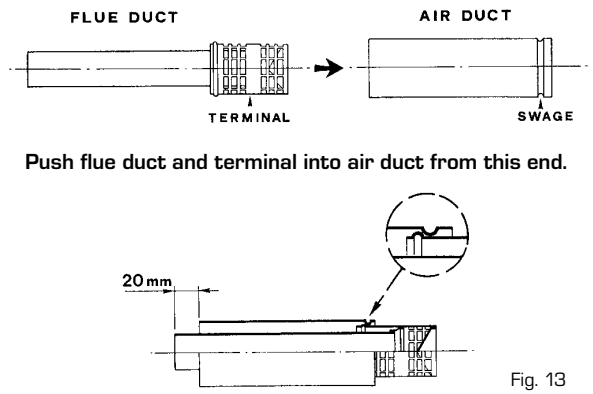

Fig. 13

- Remove the six fixing screws securing the sealed chamber front panel then remove the panel.
- Place the gasket (G) under the flange of the elbow and fit the elbow onto the top of the appliance, taking care to ensure that the silicon seal on the fan outlet correctly engages and forms a seal at its joint with the elbow. This must be checked from inside the sealed chamber.
- Secure the elbow onto the top of the appliance using the four screws and washers provided, and refit the sealed chamber front panel.

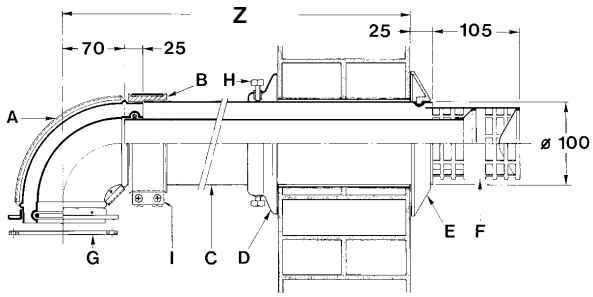

KEY

A	Elbow flange	F	Inner duct c/w terminal
B	Junction collar	G	Gasket ø 95/125 x 2
C	Outer duct	H	Fixing screw
D	Aluminium ring	I	Protective jointing clamp
E	Rubber sealing ring	J	Inner "O" ring

Fig. 14

3.4.3 Coaxial flue diaphragm

The boiler is normally supplied with a Ø 87.5 diaphragm. Way of use and optional diaphragm to be used with vertical ducts is shown in fig. 15.

3.4.4 Coaxial flue specifications

With the elbow supplied in the kit the maximum length of the flue must not exceed following measures:

	Horizontal	Vertical
FORMAT 80 C	3.4	5.0
FORMAT 100 C	3.0	5.0
FORMAT 110 C	3.0	5.0

Each additional 90° elbow installed reduces the available lenght by 0.9 metres, each additional 45° elbow reduces the available lenght by 0.45 metres.
NOTE: Sime flue systems are suitable for installation with SE-duct systems.

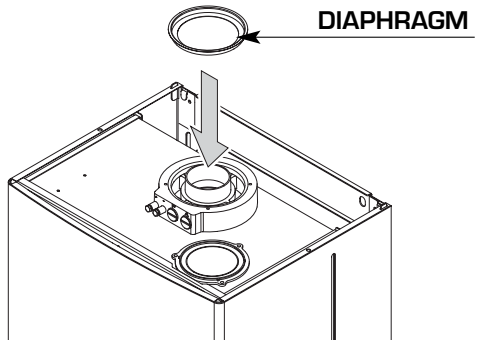

HORIZONTAL FLUE DUCTS
Install diaphragm ø 87.5 only if the coaxial flue is less than 1.8 metres long for model "FORMAT 80 C" or 1.5 metres long for models "FORMAT 100 C" and "FORMAT 110 C".

VERTICAL FLUE DUCTS
Use the following diaphragms, depending on flue length and without any additional elbow:

Flue ducts lenght	Diaphragm to be used
From 1.3 to 2.5 m	optional ø 86
From 2.5 to 4 m	standard ø 87.5
From 4 to 5 m	none

Fig. 15

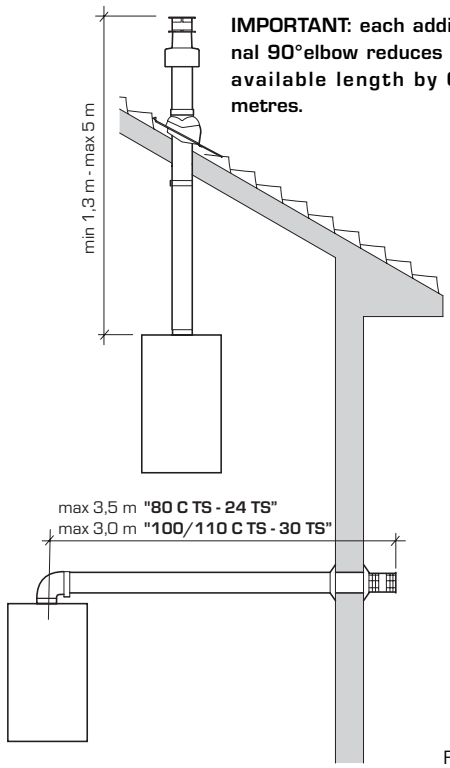

Fig. 16

3.5 SEPARATE DUCTS
(Optional alternative twin pipe system)

When installing the separate ducts, comply with the requirements of the current standards, as well as the following practical pointers:

- With direct intake from outside, when the pipe is longer than 1 m, you are recommended to insulate the piping so as to prevent the formation of condensation on the outside of the piping during particularly cold periods of the year.
- With the outlet pipe outside the building or in cold indoor environments, insulation is necessary to prevent burner ignition failure. In such cases, provide for condensate drainage.
- If a segment of the flue passes through a flammable wall, this segment must be insulated with a glass wool pipe insulator 30 mm thick, with a density of 50 kg/m³.

The maximum overall length of the intake and exhaust ducts depends on the head losses of the single fittings installed (excluding the adaptors) and can reach approximately the following horizontal measures:

- **30 m for "80 C" model,**
- **35 m for "100 C" model**
- **40 m for "110 C" model.**

For head losses in the fittings, refer to *Table 7*.

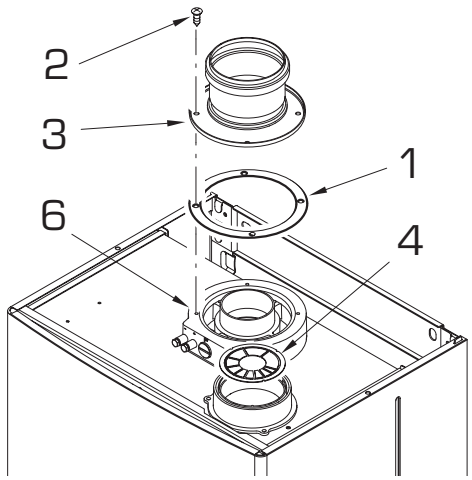

KEY
1 Sponge-rubber gasket ø 125/95
2 Fixing screw
3 Smoke outlet flange
4 Air intake diaphragm
6 Air/smoke manifold with intakes

	80 C	100 C - 110 C
K mm	180	205

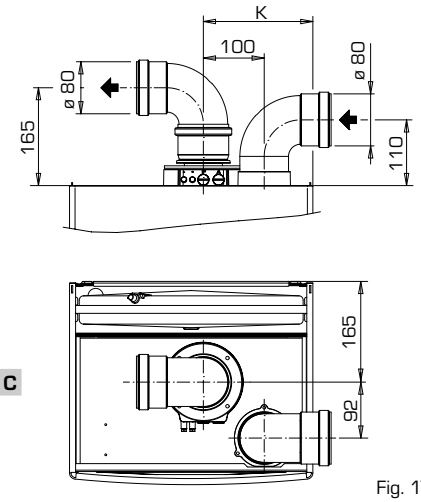

Fig. 17

Model "FORMAT 80 C"

N° segments to remove	Total horizontal lenght (inlet+outlet) in metres
none	0 ÷ 3.2
n° 1	3.2 ÷ 6.4
n° 1 and 2	6.4 ÷ 9.6
from n° 1 to 3	9.6 ÷ 12.4
from n° 1 to 4	12.4 ÷ 15.2
from n° 1 to 5	15.2 ÷ 18.0
from n° 1 to 6	18.0 ÷ 20.8
from n° 1 to 7	20.8 ÷ 23.2
from n° 1 to 8	23.2 ÷ 25.6
from n° 1 to 9	25.6 ÷ 28.0
without diaphragm	28.0 ÷ 30.4

Model "FORMAT 100 C"

N° segments to remove	Total horizontal lenght (inlet+outlet) in metres
none	0 ÷ 3.3
n° 1	3.3 ÷ 6.7
n° 1 and 2	6.7 ÷ 10.0
from n° 1 to 3	10.0 ÷ 13.3
from n° 1 to 4	13.3 ÷ 16.7
from n° 1 to 5	16.7 ÷ 19.7
from n° 1 to 6	19.7 ÷ 22.7
from n° 1 to 7	22.7 ÷ 25.7
from n° 1 to 8	25.7 ÷ 28.7
from n° 1 to 9	28.7 ÷ 31.7
without diaphragm	31.7 ÷ 34.7

Model "FORMAT 110 C"

N° segments to remove	Total horizontal lenght (inlet+outlet) in metres
n° 1 and 2	0 ÷ 3.3
from n° 1 to 3	3.3 ÷ 6.7
from n° 1 to 4	6.7 ÷ 10.0
from n° 1 to 5	10.0 ÷ 13.3
from n° 1 to 6	13.3 ÷ 16.7
from n° 1 to 7	16.7 ÷ 20.0
from n° 1 to 8	20.0 ÷ 23.3
from n° 1 to 9	23.3 ÷ 26.7
from n° 1 to 10	26.7 ÷ 33.3
without diaphragm	33.3 ÷ 40.0

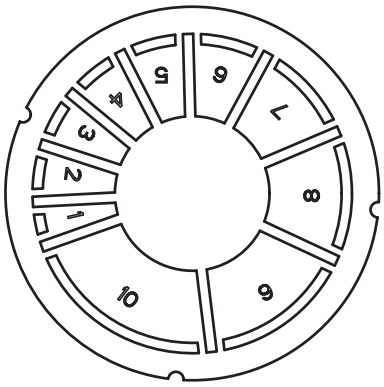

Fig. 18

TABLE 7

Twin flue accessories ø 80	Head loss metres
90° elbow MF	1.5
45° elbow MF	0.7
Extension L. 1000 (horizontal)	1.0
Extension L. 1000 (vertical)	1.0
Outlet terminal	1.0
Intake terminal	0.3
Junction twin/concentric	0.7
Roof outlet terminal L.1240	2.0
Tee condensation outlet	4.0

3.5.1 Separate flue accessories

Part No 8089904 is supplied for this purpose.
The sectored diaphragm is to be used according to the maximum head loss allowed in both pipes, as given in fig. 18.

3.5.2 Use of air intake (fig. 19)

To use the air intake in this type of outlet you must perform the following operations:
- Remove the base of the air intake, using a tool to cut it off (a);
- Overturn the air intake (b) and replace the seal (5) with the seal supplied in the kit code 8089904;
- Insert the intake diaphragm supplied in the kit code 8089904, pushing it in until it is in contact with the beat;

You can now insert the extension or curve in its housing to complete the intake (you need not use any seal or sealant).

3.6 WATER CONNECTIONS

3.6.1 Central heating connections

- Fit the two C.H. isolation valves using the gaskets supplied to the flow and return connections as shown in fig. 2. The pipe connections are labelled on the lower part of the boiler.
- Connect the C.H. pipework as required.

3.6.2 D.H.W. connections

- Fit the D.H.W. isolation valve to the cold water inlet connection as shown in fig. 2.
- Fit the union connection to the D.H.W. outlet.
- Connect the D.H.W. pipework as required.

3.7 GAS CONNECTIONS

- Screw the gas cock into the internal thread in the gas inlet connection using a suitable jointing compound.
- Connect the gas supply pipe.

3.8 SAFETY VALVE CONNECTION

- The appliance safety valve is located towards the R.H.S. of the boiler and the discharge pipe is supplied loose. Remove the two selftapping screws and lower the control box to improve access.
- Connect the discharge pipe to the valve outlet, and extend the pipe to ensure that any discharge from the safety valve is safely routed to a drain. The discharge pipe should be a minimum of 15 mm copper, and must avoid sharp corners or upward pipe runs where water may be retained.

3.9 WIRING INSTRUCTIONS
(Refer to sections 2.6 - 2.7 and fig. 20)

- Disconnect the electric power supply before performing any work.
- Remove the three screws (9) locking the control panel in place and pull the panel forward until it can be tilted downward.
- To access the components of the electrical panel, unscrew the four screws holding the protective guard in place (6).

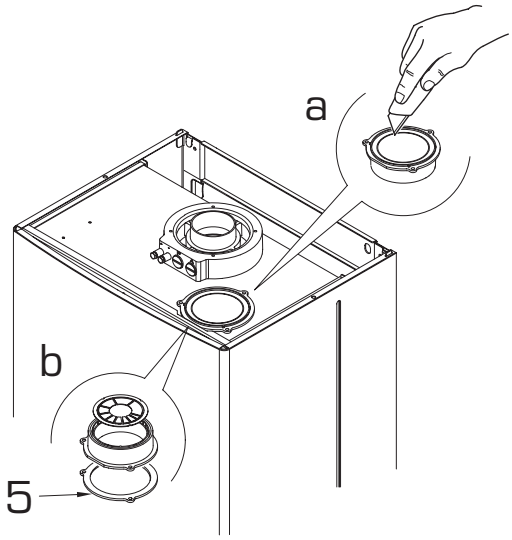

IMPORTANT: The three housings on the diaphragm permit assembly of the air intake in one position only (with numbers toward inside the boiler).

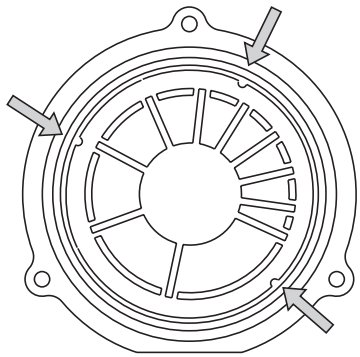

Fig. 19

- To gain access to connector **"TA"**, remove the control panel cover (7) and connect the room stat to the terminals 10-11 after having removed the jumper.
  The thermostat or timer-thermostat, recommended for better room temperature control, must be class II as specified by standard EN 60730.1 (clean contact).
- Carry out electrical system checks through a suitable test meter: earth continuity, polarity, resistance to earth and short circuit.
- Re-secure control box.
- Ensure sufficient length of cable to allow access to control panel.

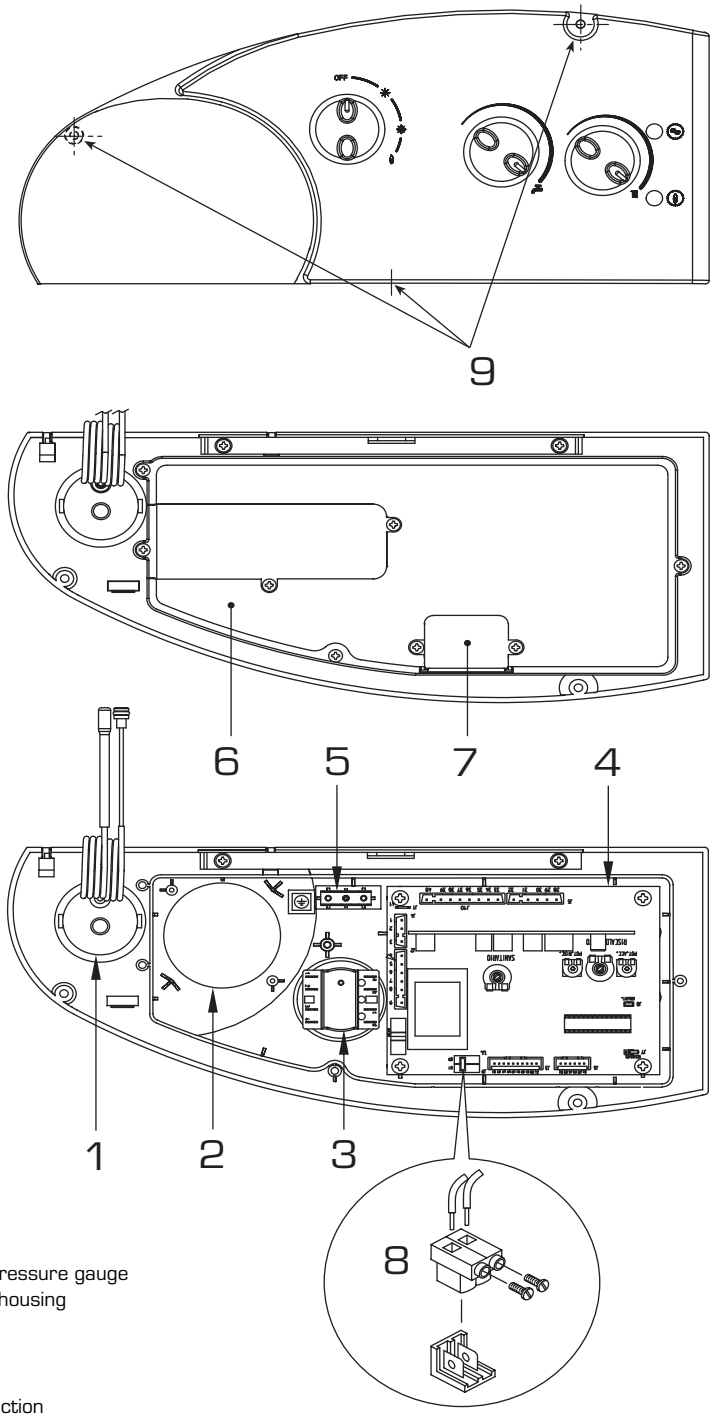

KEY
1 Temperature and pressure gauge
2 Time programmer housing
3 Rotary switch
4 Main PCB
5 Earth faston
6 Control panel protection
7 Cover (TA)
8 Connector (TA)
9 Fixing screw

ATTENTION: After having removed the three fixing screws, tilt the panel downward to gain access.

Fig. 20

4 COMMISSIONING AND TESTING

SIME SUPPORT THE BENCHMARK INITIATIVE

All relevant sections of the logbook must be filled in at the time of installation and thereafter service information on the back page of the logbook. Commissioning of the boiler is not complete until the logbook is filled in.
Before commissioning the appliance, the whole gas installation including the meter MUST be purged and tested for gas soundness in accordance with BS6891.

IMPORTANT: open all doors and windows, extinguish naked lights, and DO NOT SMOKE whilst purging the gas line.
Before commencing the commissioning procedure, ensure that the gas service cock is turned on, the electricity supply is isolated, and that the D.H.W. and C.H. isolation valves are in the closed position.

4.1 FILLING THE WATER SYSTEM

- Open the C.H. flow and C.H. return valves (19 - 18 fig. 2).
- Loosen the automatic air vent cap (9 fig. 2).
- Open all radiator valves and system air vents. Fill the system with water using one of the approved methods described in section 2.9 to about 0.5 bar greater than the system design pressure. Close all air vents. Do not close the A.A.V. the one near the pump!
- Check the system for water soundness.
- Completely drain the appliance and heating system, thoroughly flush the system, and refill the system design pressure.
- Open the D.H.W. inlet valve, open any hot tap, clear of air bubbles. Close hot tap.

4.2 COMMISSIONING THE BOILER

- Remove the screw and connect a pressure gauge to the burner pressure test point on the gas valve (fig. 21).

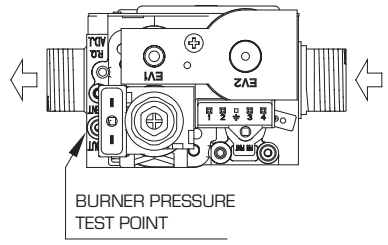

Fig. 21

- Ensure that the rotary switch on the facia panel is set to the summer position "☀" (D.H.W. Only), turn the D.H.W. thermostat to maximum (fully clockwise), and turn on the electrical supply. Fully open any D.H.W. tap and the burner will light.
- Allow the boiler to run for at least 5 minutes and check that the burner pressure is as stated in section 1.3. The D.H.W. burner pressure is factory set and should not require adjusting. If the burner pressure is low, check that the appliance has not begun to modulate (this will occur if the D.H.W. flow rate is low. If modulation is suspected, open all D.H.W. taps to maximise flow and recheck burner pressure). Check also the inlet pressure with the burner alight; this should be 20 mbar +/– 1.0 mbar standing pressure & the working inlet pressure limited to a loss no greater than 1.0 mbar for natural gas. If it is necessary to adjust the D.H.W. burner pressure the method is described in section 8.6.
- Reduce the D.H.W. draw off rate to the minimum necessary to maintain the burner alight by carefully adjusting the D.H.W. inlet valve and check that the burner pressure decreases in response to D.H.W. temperature rise. Fully open the inlet valve.
- Close the D.H.W. tap and ensure that the burner is extinguished and the pump stops.

4.3 SETTING THE C.H. INPUT

- Turn the rotary switch to the winter position "❄" and ensure that the room thermostat (if fitted) is calling for heat. Turn the C.H. thermostat knob to maximum (fully clockwise) and the burner will light.
- Allow the boiler to run for at least 5 minutes and check the burner pressure. The heating input is factory set as stated in *Table 3*.
- If the heating output is to be adjusted, proceed as follows:
  - refer to section 1.3 and establish the desired burner pressure;
  - remove (pull forwards) the C.H. knob protecting the potentiometer;
  - set the burner pressure as required using a small screwdriver on potentiometer (1 fig. 22). Rotate the screw anti-clockwise to reduce the burner pressure;
  - operate the rotary switch between SUMMER and WINTER position a few times and check that the correct burner pressure is maintained.
  - Replace the C.H. knob over potentiometer.
  - To set the time clock see the user instructions.

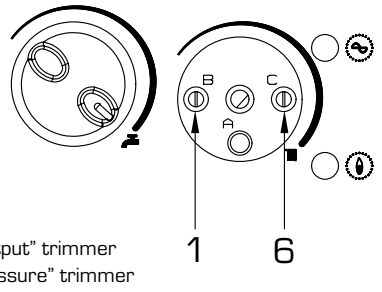

KEY
1 "Heating output" trimmer
6 "Ignition pressure" trimmer

NOTE: To gain access to trimmers (1) and (6), take off the central heating potentiometer knob.
Fig. 22

4.3.1 Ignition gas pressure trimmer (6 fig. 22)

Trimmer to vary the pressure level upon ignition (STEP), of the gas valve. According to the type of gas for which the boiler is equipped, the trimmer must be regulated so as to obtain a pressure of approx. 3 mbar at the burner for methane gas and 7 mbar for butane gas (G30) and propane gas (G31).
To increase pressure, turn the trimmer clockwise; to reduce pressure, turn the trimmer counterclockwise.
The slow ignition pressure level can be set during the first 10

seconds following burner ignition.
After setting the pressure level upon ignition (STEP) according to the type of gas, check that the pressure for heating is still at the value previously set.

4.4 SETTING THE D.H.W. FLOWRATE

A restrictor nut is fitted into the diverting valve to reduce the D.H.W. flow to that which will give an acceptable D.H.W. temperature. To set the D.H.W. flow, procede as follows:

- select Summer position "☀" and turn the D.H.W. thermostat to max.;
- fully open the D.H.W. tap furthest from the boiler;
- check that the boiler is firing at maximum burner pressure;
- adjust the D.H.W. flowrate by turning the restrictor lever on the divertor valve until a D.H.W. temperature rise of approx 35°C is achieved. This corresponds to the flowrates shown in *Table 4*;
- turn off the tap;
- remove the pressure gauge and refit the sealing screw;

Remember that the flow rates and corresponding temperatures of use of hot water, given in *Table 4*, have been obtained by positioning the selector of the circulation pump on the maximum value.
Should there be any reduction in the D.H.W. flow rate, the filter installed on the inlet to the pressure switch valve may need cleaning. To gain access to the filter, first close the cold water isolation valve (20, figure 2), drain the D.H.W. circuit via the lowest tap, make provision to collect a small discharge of water, then loosen the brass swivel connection to access the filter.

4.5 FINAL CHECKS

- Re-light and test for gas soundness.
- Re-fit the casing front panel and securing brackets.
- Set the C.H. and D.H.W. potentiometers to the required settings.
- Ensure that the time clock is set at the desired time periods. Set the room thermostat (if fitted) to the required setting.

4.6 USER'S INSTRUCTIONS

Upon completion of commissioning and testing the system, the installer should:

- Give the "Users Instructions" to the householder and emphasise their responsibilities under the "Gas Safety (Installation and Use) Regulations 1996 (as amended)".
- Explain and demonstrate the lighting and shutdown procedures.
- Advise the householder on the efficient use of the system, including the use and adjustment of all system controls for both D.H.W. and C.H.
- Advise the user of the precautions necessary to prevent damage to the system, and to the building, in the event of the system remaining inoperative during frost conditions.
- Explain the function of the boiler overheat thermostat, and how to reset it.
  Emphasise that if cut-out persists, the boiler should be turned off and the installer or service engineer consulted.
- Stress the importance of an annual service by a registered heating engineer.

GAS BOILER SYSTEM COMMISSIONING CHECKLIST

This Commissioning Checklist is to be completed in full by the competent person who commissioned the boiler as a means of demonstrating compliance with the appropriate Building Regulations and then handed to the customer to keep for future reference.

Failure to install and commission according to the manufacturer's instructions and complete this Benchmark Commissioning Checklist will invalidate the warranty. This does not affect the customer's statutory rights.

Customer Name _____ Telephone Number _____

Address _____

Boiler Make and Model _____

Boiler Serial Number _____

Commissioned by *(print name)* _____ Gas Safe Register Number _____

Company Name _____ Telephone Number _____

Company Address _____

_____ Commissioning Date _____

To be completed by the customer on receipt of a Building Regulations Compliance Certificate*:

Building Regulations Notification Number *(if applicable)* _____

CONTROLS Tick the appropriate boxes

Time and Temperature Control to Heating	Room Thermostat and Programmer/Timer ☐	Programmable Room Thermostat ☐	Load/Weather Compensation ☐	Optimum Start Control ☐
Time and Temperature Control to Hot Water		Cylinder Thermostat and Programmer/Timer ☐		Combination Boiler ☐
Heating Zone Valves			Fitted ☐	Not Required ☐
Hot Water Zone Valves			Fitted ☐	Not Required ☐
Thermostatic Radiator Valves			Fitted ☐	Not Required ☐
Automatic Bypass to System			Fitted ☐	Not Required ☐
Boiler Interlock				Provided ☐

ALL SYSTEMS

The system has been flushed and cleaned in accordance with BS7593 and boiler manufacturer's instructions Yes ☐

What system cleaner was used? _____

What inhibitor was used? _____ Quantity _____ *litres*

CENTRAL HEATING MODE Measure and Record:

Gas Rate	_____	m^3/hr	OR	_____	ft^3/hr
Burner Operating Pressure (if applicable)	_____	mbar	OR Gas Inlet Pressure	_____	mbar
Central Heating Flow Temperature				_____	°C
Central Heating Return Temperature				_____	°C

COMBINATION BOILERS ONLY

Is the installation in a hard water area (above 200ppm)? Yes ☐ No ☐

If yes, and if required by the manufacturer, has a water scale reducer been fitted? Yes ☐ No ☐

What type of scale reducer has been fitted? _____

DOMESTIC HOT WATER MODE Measure and Record:

Gas Rate	_____	m^3/hr	OR	_____	ft^3/hr
Burner Operating Pressure (at maximum rate)	_____	mbar	OR Gas Inlet Pressure (at maximum rate)	_____	mbar
Cold Water Inlet Temperature				_____	°C
Hot water has been checked at all outlets			Yes ☐ Temperature	_____	°C
Water Flow Rate				_____	*l/min*

CONDENSING BOILERS ONLY

The condensate drain has been installed in accordance with the manufacturer's instructions and/or BS5546/BS6798 Yes ☐

If the condensate pipe terminates externally has the pipe diameter been increased and weatherproof insulation fitted? Yes ☐

ALL INSTALLATIONS

If required by the manufacturer, record the following CO_2 _____ % OR CO _____ *ppm* OR CO/CO_2 Ratio _____

The heating and hot water system complies with the appropriate Building Regulations Yes ☐

The boiler and associated products have been installed and commissioned in accordance with the manufacturer's instructions Yes ☐

The operation of the boiler and system controls have been demonstrated to and understood by the customer Yes ☐

The manufacturer's literature, including Benchmark Checklist and Service Record, has been explained and left with the customer Yes ☐

Commissioning Engineer's Signature _____

Customer's Signature _____

(To confirm satisfactory demonstration and receipt of manufacturer's literature)

*All installations in England and Wales must be notified to Local Authority Building Control (LABC) either directly or through a Competent Persons Scheme. A Building Regulations Compliance Certificate will then be issued to the customer.

benchmark

©Heating and Hotwater Industry Council (HHIC)

www.centralheating.co.uk

Service Record

It is recommended that your heating system is serviced regularly and that the appropriate Service Interval Record is completed. This is also a condition of any extended warranty offered.

Service Provider

Before completing the appropriate Service Record below, please ensure you have carried out the service as described in the manufacturer's instructions.

Always use the manufacturer's specified spare part when replacing controls.

Service 1 Date:

Engineer Name:

Company Name:

Telephone No.

Gas Safe Register No.

Comments:

Signature:

Service 2 Date:

Engineer Name:

Company Name:

Telephone No.

Gas Safe Register No.

Comments:

Signature:

Service 3 Date:

Engineer Name:

Company Name:

Telephone No.

Gas Safe Register No.

Comments:

Signature:

Service 4 Date:

Engineer Name:

Company Name:

Telephone No.

Gas Safe Register No.

Comments:

Signature:

Service 5 Date:

Engineer Name:

Company Name:

Telephone No.

Gas Safe Register No.

Comments:

Signature:

Service 6 Date:

Engineer Name:

Company Name:

Telephone No.

Operative ID No.

Comments:

Signature:

Service 7 Date:

Engineer Name:

Company Name:

Telephone No.

Gas Safe Register No.

Comments:

Signature:

Service 8 Date:

Engineer Name:

Company Name:

Telephone No.

Gas Safe Register No.

Comments:

Signature:

Service 9 Date:

Engineer Name:

Company Name:

Telephone No.

Gas Safe Register No.

Comments:

Signature:

Service 10 Date:

Engineer Name:

Company Name:

Telephone No.

Gas Safe Register No.

Comments:

Signature:

5 ROUTINE SERVICING INSTRUCTIONS

To ensure continued efficient operation of the appliance, it is recommended that it is checked and serviced as necessary at regular intervals. The frequency of servicing will depend upon the particular installation conditions and usage but in general once a year should be adequate.
It is the law that any service work must be carried out by registered personnel (C.O.R.G.I.). Before commencing any service operation, ISOLATE the mains electrical supply, and TURN OFF the gas supply at the main service cock. Service the appliance by following the full procedure detailed below.

5.1 MAIN BURNER ASSEMBLY

- Remove the casing as showed in fig. 23.
- Remove the 8 fixing screws securing the sealed chamber front panel then remove the panel.
- Unscrew the 7 screws securing the combustion chamber front panel and remove the panel, taking care not to damage the insulation.
- Remove the electrode by unscrewing it from the burner manifold.
- Unscrew the burner manifold union and locking nut. Lift the front of the burner to disengage manifold thread and then lift the burner clear.
- Remove the burner manifold by disconnecting the four screws.
- Inspect and if necessary, clean the injectors, electrodes, and the main burner bars.

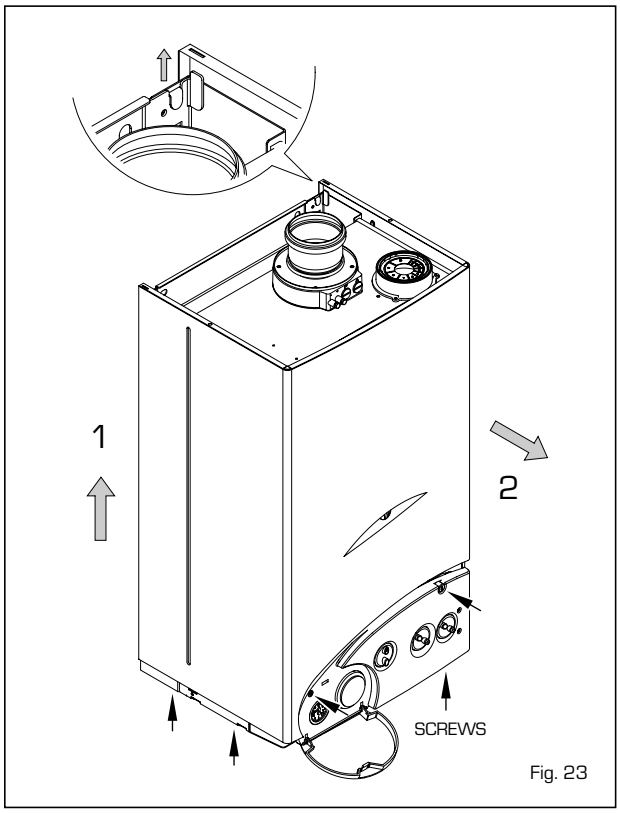

Fig. 23

5.2 FAN ASSEMBLY

- Disconnect the electrical connections to the fan. Note the position of the earth conductor.
- Remove the three screws securing the fan.
- Tilt the fan forwards and remove in a downwards direction.
- Inspect the fan assembly and clean if necessary.

5.3 HEAT EXCHANGER

- Inspect the heat exchanger, and clean if necessary.

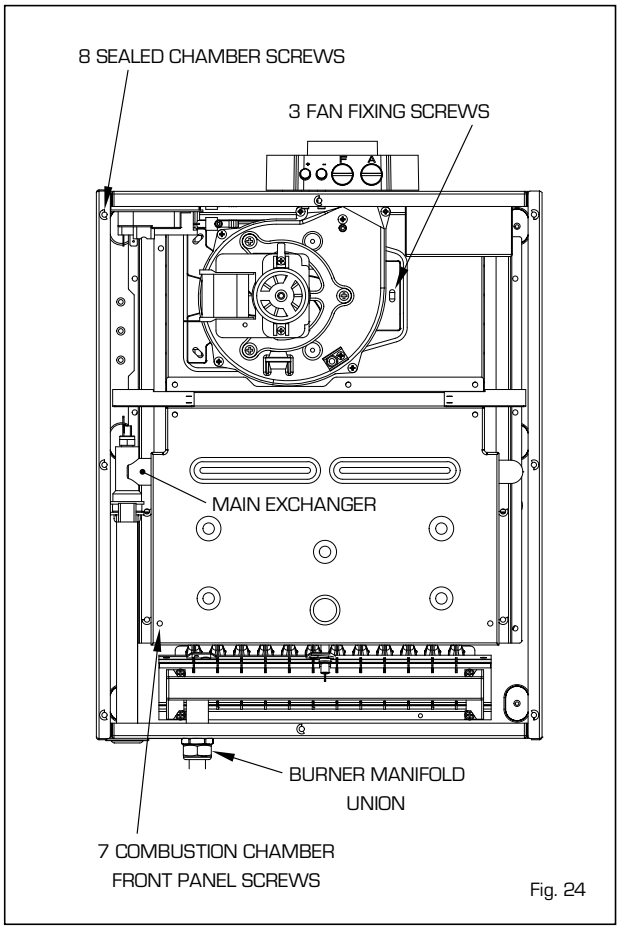

Fig. 24

5.4 WATER FLOW SWITCH

- Revome the cover from the micro assembly to gain access to the flow switch spindle.
- Ensure the spindle is free to move (see fig. 25).
- Re-assemble the cover.

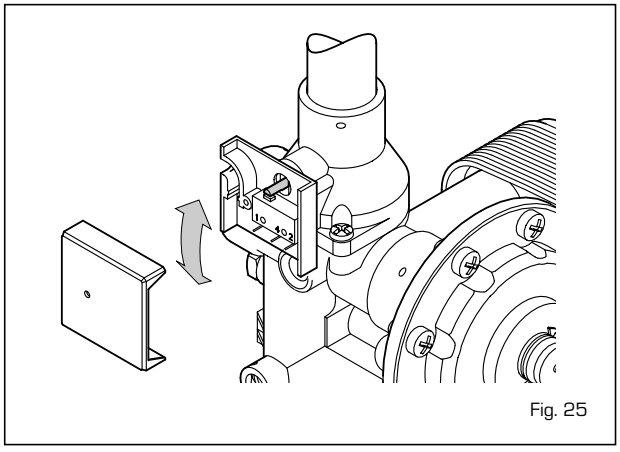
Fig. 25

5.5 CHIMNEY SWEEP FUNCTION (combustion analysis)

To carry out the verification of combustion in the boiler turn the selector and stop on the position ( ) until the green/orange led starts to flash intermittently.
From that moment the boiler will start functioning in heating mode at the maximum power, with switching off at 80°C and restarting at 70°C.
Before activating the chimney sweep function make sure that the radiator valves or eventual zone valves are open.
The test may be carried out also during D.H.W. mode.
To do so it is enough, after having activated the chimney sweep function, to take some hot water from one or more outlets.
Even in this condition the boiler functions at the maximum temperature always with the primary controlled between 80°C and 70°C. During the entire duration of the testing the hot water taps must remain open.
After verifying the combustion the boiler should be switched off by placing the selector on the **OFF** position; then return the selector to the desired function.

ATTENTION: After about 15 minutes, or once the hot water request has been fulfilled, the chimney sweep function automatically deactivates.

5.6 RE-ASSEMBLY

- Re-assemble all the components in reverse order and replace all the gaskets fitted in the gas line.
  Ensure that all seals are correctly fitted and that the pressure sensing line is correctly fitted.
  Check that the fan earth connection is correctly re-fitted. Note that the fan polarity (Line and Neutral) is immaterial.
- Check for gas soundness before fitting the casing.

5.7 RE-COMMISSIONING

- Turn on the gas supply, and check for gas soundness whilst the appliance is running.
- Check the operation of the appliance in both C.H. and D.H.W. mode and ensure in both cases that the burner pressure after at least 5 minutes running is as stated on the data plate or in *Table 3*.
  Adjust if necessary as described in section 8.

When any service or replacement of electrical components which has required the breaking and re-making of electrical connections has taken place, the following tests must be repeated:
- earth continuity;
- short circuit;
- polarity;
- resistance to earth.

5.8 CLEANING THE C.H. WATER FILTER (fig. 25/a)

To clean the filter, close the delivery/return on/off taps, turn off the power to the control panel, remove the casing and empty the boiler using the drain provided until the hydrometer shows “zero”.
Place a container for collection underneath the filter, unscrew the cap and proceed to clean the filter, removing impurities and limestone deposits. Check the seal o-ring before reassembling the cap with the filter.

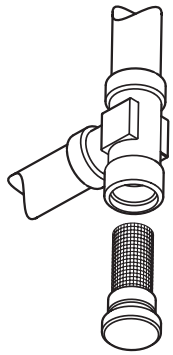

Fig. 25/a

6 FAULT FINDING

6.1 EARTH CONTINUITY CHECK

Appliances must be electrically disconnected, meter set on Ω (ohm) x 1 scale and adjust zero if necessary. Tests leads from any appliance earth point (e.g. inside control box) see wiring diagrams (section 7) to earth pin on plug. Resistance should be less than 1Ω (ohm). If the resistance is greater than 1Ω (ohm) check all earth wires for continuity and all contacts are clean and tight. If the resistance to earth is still greater than 1Ω (ohm) then this should be investigated futher.

6.2 SHORT CIRCUIT CHECK

Switches turned FULL ON - meter set on Ω (ohms) x 1 scale. Test leads from L to N on appliance terminal block, if meter reads 0 then there is a short circuit.
Meter set on Ω (ohm) x 100 scale. Repeat it with leads from L to E. If meter reads less than infinity (∞) there is a fault.

NOTE: Should it be found that the fuse has failed but no fault is indicated, a detailed continuity check (i.e. by disconnecting and checking each component) is required to trace the faulty component.
It is possible that a fault could occur as a result of local burning/arcing but no fault could be found under test. However, a detailed visual inspection should reveal evidence of burning around the fault.

6.3 POLARITY CHECK

Appliance reconnected to mains supply and meter set on 300 V ac scale. Test at appliance terminal block.
- Test leads from L to N meter reads approx.: 240 V ac.
- Test leads from L to E " ⏚ " meter reads approx. 240 V ac.
- Test leads from N to E " ⏚ " meter reads from 0 to 15 V ac.

6.4 RESISTANCE TO EARTH CHECK

Appliance must be disconnected from main supply and meter on Ω (ohm) x 100 scale.
All switches including thermostat on test leads from L to E - if meter reads other than infinity (∞) there is a fault which should be isolated. A detailed continuity check is required to trace the faulty component.

IMPORTANT:
These series of checks are the first electrical checks to be carried out during a fault finding procedure. On completion of the service/fault finding task which has required the breaking and remaking of electrical connections then the checks 6.1 Earth continuity, 6.3 Polarity and 6.4 Resistance to earth must be repeated.

6.5 FAULT FINDING LEDS

The indicator leds signalling irregular and/or incorrect operation of the equipment are indicated in fig. 26.
Before commencing any service operation, ISOLATE the mains electrical supply, and TURN OFF the gas supply at the main service cock. It is the law that any service work must be carried out by registered personnel (Gas Safe Register).

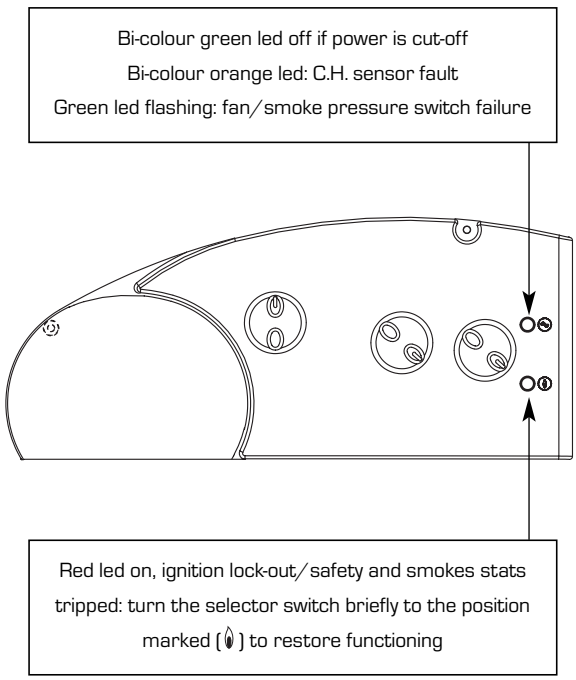

Fig. 26

6.6 C.H. MODE - FAULT FINDING

Start from cold Rotary switch set to WINTER position.
Room thermostat (if fitted) calling for heat and all D.H.W. taps off.
C.H. thermostat set to maximum position.
Clock in the on position.

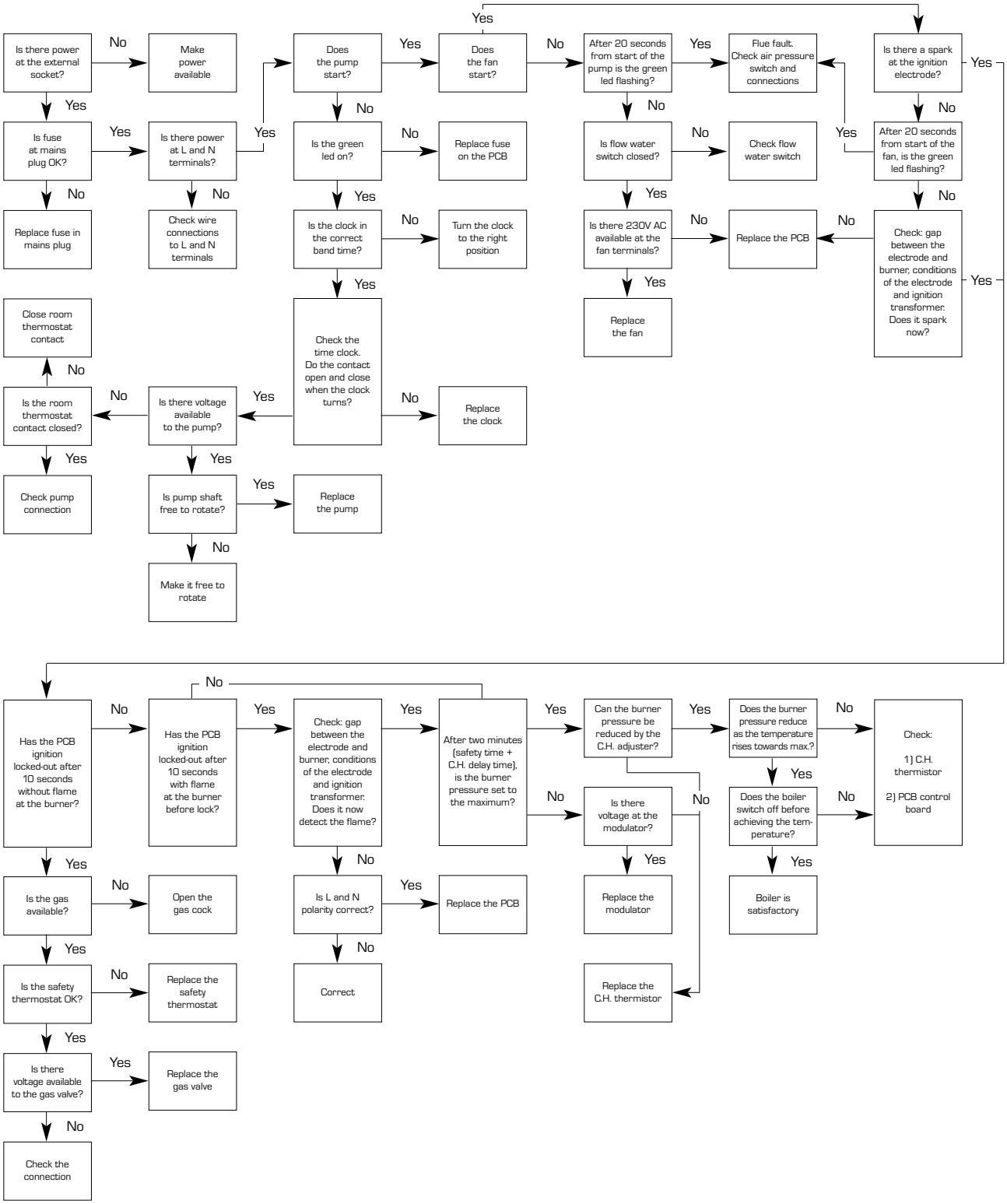

NOTE:
After completing fault finding reset the room thermostat (if fitted) to the required setting. If the appliance will not function check the wiring to the clock and if necessary, replace the clock.

6.7 D.H.W. MODE - FAULT FINDING

Start from cold - rotary switch set to SUMMER position, D.H.W. thermostat set to maximum, and all D.H.W. taps OFF.

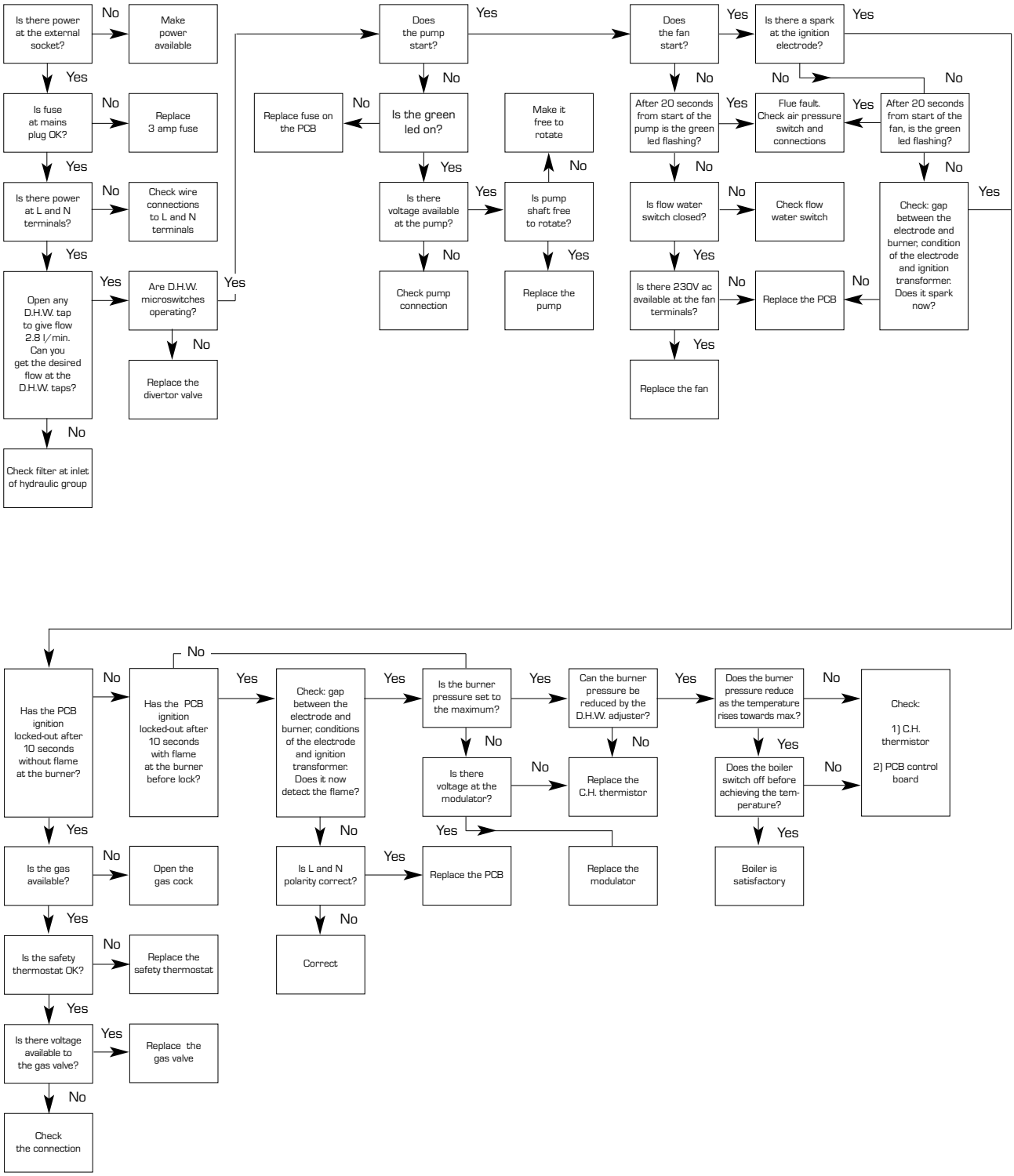

7 WIRING & FUNCTIONAL DIAGRAMS

7.1 ILLUSTRATED FLOW WIRING DIAGRAM

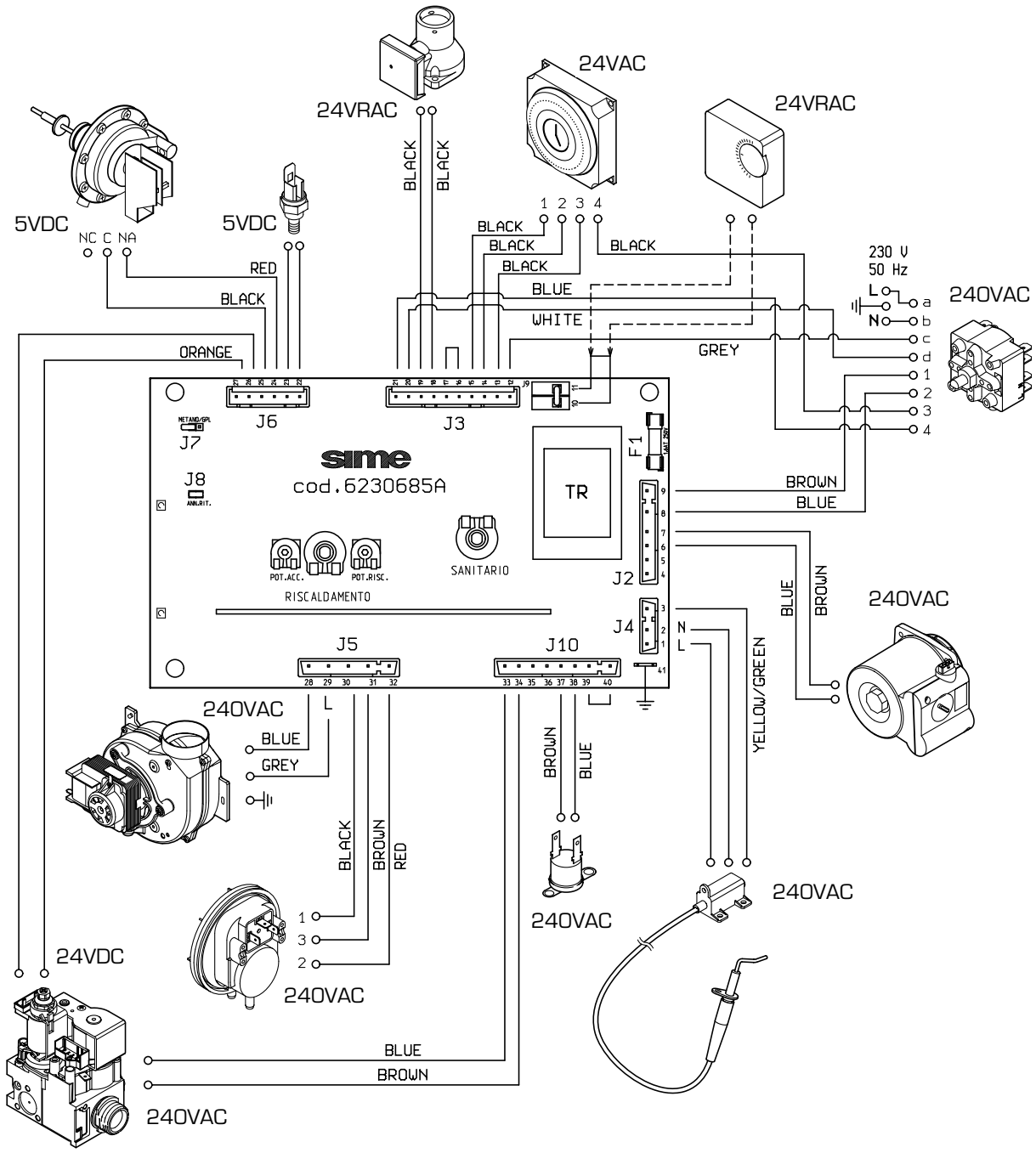

NOTE:

- **The room thermostat must be connected to the terminals 10-11 of the "TA" connector after having removed the link.**
- **To remote control the boiler connect an external clock to the terminals 10-11 (24 V) of the "TA" connector and set the built-in clock to "constant" mode (see user instructions for details).**

JUMPERS POSITION AND FEATURES

JUMPER	POSITION AND FEATURE CLOSED	POSITION AND FEATURE OPEN	SUPPLY POSITION
J7 - METANO/GPL	Ready to function with LPG	Ready to function with natural gas	Open
J8 - ANN. RIT.*	Ignition delay cancelled	Ignition delay operating	Open

* In the heating phase, the electronic board is programmed to include a burner technical delay interval of approx. 3 minutes, which occurs both at system cold starting and at subsequent re-ignitions. The aim is to overcome the problem of repeated ignitions and turning off with very short time intervals between. This could occur in particular in systems presenting high head losses. At each restart after the period of slow ignition, the boiler will set itself for about 1 minute at the minimum modulation pressure, and will then move to the heating pressure value set.

Fig. 27

8 REPLACEMENT OF PARTS

8.1 HEAT EXCHANGER

- Remove the fan as described in section 8.3.
- Disconnect the pressure sensing pipe from the flue box, lift the collector hood assembly, tilt forwards, and remove the hood.
- Isolate the C.H. flow and return valves.
- Drain the heat exchanger using the drain cock (at the bottom RHS of the appliance)
- Unclip the heat exchanger securing clips and unscrew completely the expansion vessel nut.
- Disconnect the pipes from the exchanger and lift out the heat exchanger.
- Re-assemble in reverse order, ensuring that the heat exchanger seals and clips are correctly located and that the pressure sensing pipe is correctly re-fitted. The fan polarity is not important except the earth conductor (G/Y which is marked on the appliance).
- Refill, and re-commission the system as described in section 4.

8.2 COMBUSTION CHAMBER INSULATION

The design of this appliance is such that the rear and side insulation should not require replacement unless mechanically damaged.

IMPORTANT: When handling insulation panels, take care to avoid producing or inhaling dust particles. When removing old or damaged insulation panels, dampen with water to minimise dust.

To replace the insulation front panel, proceed as follows:
- remove the combustion chamber front panel as described in section 5.1;
- replace the front insulation panel and glue it into position on the front panel using the glue supplied. Re-assemble in reverse order.

Should the rear or side panels become damaged, replace them as follows.
- remove the heat exchanger as described in section 8.1;
- remove the side insulation panels followed by the rear panel;
- re-assemble in reverse order, refill, and recommission the system as described in section 4.

8.3 FAN ASSEMBLY

- Remove the casing front panel and sealed chamber front panel as described in section 5.1.
- Disconnect the electrical connections and the pressure sensing pipes to the fan. Note the position of the earth conductor.
- Unscrew the three screws securing the fan.
- Drop and tilt the fan forwards and remove in a downwards direction.
- Re-assemble in reverse order. Ensure that the earth connection is correctly refitted. Note that the polarity (Line and Neutral) is immaterial.

8.4 MAIN BURNER

- Remove the main burner by following section 5.1.
- Transfer the ignition electrode onto the new burner assembly.
- Re-assemble in reverse order. Check the electrode gaps (fig. 28) and test for gas soundness.
- Re-commission the appliance as described in section 4.

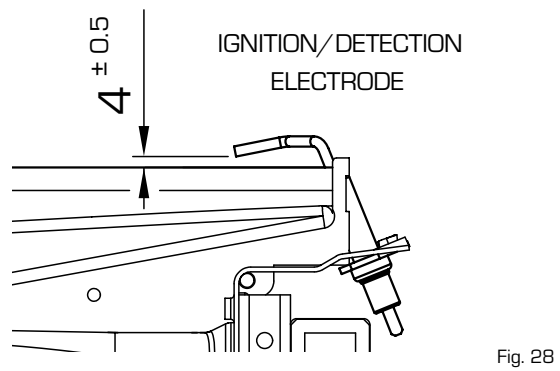

Fig. 28

8.5 IGNITION/DETECTION ELECTRODE

- Remove the casing front panel and sealed chamber front panel as described in section 5.1.
- Unscrew the single screw securing the electrode in position, and release the electrode from the burner.
- Remove the electrode and disconnect its cable from the ignition transformer.
- Replace the electrode and re-assemble in reverse order.

8.6 GAS VALVE

- Remove the casing front panel as described in section 5.1.
- Disconnect the two leads from the modulating solenoid and disconnect the valve connector (one screw).
- Unscrew the nut between the inlet pipe and the valve.
- Unscrew the burner manifold nut underneath the sealed chamber, and withdraw the gas valve complete with outlet pipe.
- Transfer the outlet pipe onto the new gas valve, using a new gasket (supplied with the valve).
- Fit the new gas valve assembly into the appliance using the other new gasket supplied on the valve inlet, and re-assemble in reverse order.
- Re-light the appliance, check for gas soundness, and re-commission in accordance with section 4.

In addition it will be necessary to set the D.H.W. and C.H. heat inputs, with reference to fig. 29, as follows:
Note that it is necessary to set the MAXIMUM PRESSURE FIRST.
- Connect a pressure gauge to the burner pressure test point.
- Remove the sealing cap of the proportioning unit (C) by rotating it/turn anticlockwise.
- Adjust DHW potentiometer to maximum, then fully open any DHW tap to light the boiler.
- Using a 10 mm spanner, turn nut (B) to attain the maximum pressure in *Table 3*.
  Turn the nut clockwise to increase or anti-clockwise to decrease the burner pressure.

- Turn the main selector switch on and off a few times (with the hot tap still open) and check that the pressure returns to the correct (set) maximum value (as in *Table 3*).
- Set the minimum burner pressure by first isolating the electricity supply and disconnecting one of the modulating solenoid leads, then restore the electricity supply and fully open a DHW tap to light the appliance at minimum gas rate.
- Set the minimum pressure with reference to *Tables 3* by holding nut (B) in position with a 10 mm spanner and rotating the plastic screw (A) with a screwdriver until the correct pressure is obtained. Turn the screw clockwise to increase the pressure or anti-clockwise to decrease it. It is essential that the max pressure has been set prior to adjusting the minimum pressure. Check that the minimum pressure is correctly set by turning on and off the D.H.W. inlet valve several times and ensuring that the pressure returns to that previously adjusted;
- Isolate the power supply, re-connect the modulation lead, restore the power and re-check the maximum pressure, then re-fit the plastic cover (1).
- Reduce the D.H.W. draw off rate to the minimum necessary to maintain the burner alight by carefully adjusting the D.H.W. Inlet valve and check that the burner pressure decreases in response to D.H.W. temperature rise. Fully open the inlet valve;
- Close the D.H.W. tap and ensure that the burner is extinguished and the pump stops.
- Adjust the Central Heating maximum pressure as described in section 4.3, then complete the re-commissioning as described in 4.4 and 4.5.

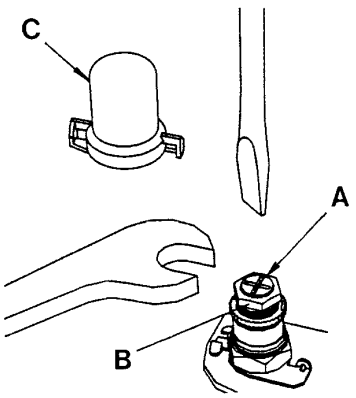

KEY
A Plastic screw
B Nut
C Sealing cap

Fig. 29

8.7 AIR PRESSURE SWITCH

- Remove the casing front panel and sealed chamber front panel as described in section 5.1.
- Disconnect the pressure sensing pipe from the switch.
- Remove the switch (two screws) and fit the new one.
- Transfer the electrical connections one at a time (to ensure that they are not incorrectly re-fitted) to the new switch.
- Re-assemble in reverse order referring to the wiring diagrams (section 7) if necessary.
  Ensure that the pressure sensing lead is correctly connected to the low pressure connection on the pressure switch (marked P2).

8.8 OVERHEAT THERMOSTAT

The overheat thermostat is situated on the flow pipe, below the sealed chamber (11 fig. 3).
- Remove the casing front panel as described in section 5.1.
- Disconnect the two overheat thermostat wires.
- Unscrew the two limit thermostat fixing screws and remove the thermostat.
- Replace the thermostat and spread heat sink compound (supplied) over the base of the new one.
- Re-assemble in reverse order. (Polarity is immaterial).

8.9 THERMISTOR

The thermistor is placed over the main exchanger.
- Remove the casing front panel as described in section 5.1.
- Isolate the C.H. flow and return valves (19 - 18 fig. 2), and drain the appliance through the drain plug (13 fig. 2).
- Pull off the electric connection, and unscrew the thermistor from the exchanger.
- Replace the thermistor and re-assemble in reverse order.

Table 8 shows the resistance values (Ω) that are obtained on the sensor as the temperature varies.

TABLE 8

Temperature (°C)	Resistance (Ω)
20	12,090
30	8,313
40	5,828
50	4,161
60	3,021
70	2,229
80	1,669

8.10 DRIVER PCB

- Remove the casing front panel as described in section 5.1.
- Open the control panel protecting cover by removing the four fixing screw.
- Pull off the potentiometer knobs.
- Release the PCB (four screws), transfer all connections onto the new PCB, and re-assemble in reverse order.
- Re-set the C.H. burner pressure as described in section 4.3.

8.11 PUMP MOTOR

- Remove the casing front panel as described in section 5.1.
- Unplug the electrical connection plug.
- Isolate the C.H. flow and return valves (19 - 18 fig. 2), and drain the appliance through the drain plug (13 fig 2).
- Unscrew the four fixing screws on the motor.
- Replace the pump motor and re-assemble in reverse order. If the new pump is fitted with a speed adjuster, ensure that the speed is set to maximum.
- Refill and commission the system as described in section 4.1.

8.12 D.H.W. HEAT EXCHANGER

- Remove the casing front panel as described in section 5.1.
- Isolate the C.H. flow and return valves, and the D.H.W. isolation valve (19 - 18 - 20 fig. 2).
- Drain the appliance through the drain plug (13 fig 2).
- Drain the D.H.W. circuit by opening any D.H.W. tap below the level of the boiler.
- Lift off the microswitch assembly.
- Remove the three screws fixing the D.H.W. heat exchanger and remove the heat exchanger.
- Fit new heat exchanger and re-assemble in reverse order using the new gaskets supplied with the heat exchanger.
- Refill and re-commission the system as described in section 4.1.

8.13 DIVERTOR VALVE - COMPLETE

- Remove the casing front panel as described in section 5.1.
- Isolate the C.H. flow and return valves, and the D.H.W. isolation valve (19 - 18 - 20 fig. 2).
- Drain the appliance through the drain plug (13 fig 2)
- Drain the D.H.W. circuit by opening any D.H.W. tap below the level of the boiler.
- Lift off the microswitch assembly.
- Remove the three screws fixing the D.H.W. heat exchanger and remove the heat exchanger.
- Pull out the divertor valve circlip and remove the valve.
- Transfer the electrical connections onto the new valve. If necessary. Refer to the wiring diagrams in section 7.
- Re-assemble in reverse order, using the new gaskets supplied with the valve.
- Refill and re-commission the system as described in section 4.1.

8.14 DIVERTOR VALVE - MICROSWITCH ASSEMBLY

- Remove the casing front panel as described in section 5.1.
- Remove the two screws pivot the control box downwards.
- Lift off the microswitch assembly.
- Transfer the electrical connections onto the new microswitch assembly. If necessary refer to the wiring diagrams in section 7.
- Re-assemble in reverse order.

8.15 C.H. EXPANSION VESSEL

Replacement is not recommended if a rear flue outlet is used or if the clearance above the casing is less than 300 mm.

- Remove the casing front panel as described in section 5.1.
- Isolate the C.H. flow and return valves (17 - 18 fig. 2), and drain the appliance through the drain plug (13 fig. 2).
- Unscrew the expansion vessel union on the C.H. return pipe.
- If a rear flue outlet is used it is necessary to disengage the flue and air duct temporarily. Refer to section 3.5.
- Remove the adjusting screws on the wall mounting bracket thereby allowing the appliance to move slightly forwards at the top.
- Lift the expansion vessel out of the appliance through the top.
- Replace the expansion vessel and re-assemble in reverse order. Re-pressurise and re-commission the system as described in section 4.1.

8.16 PRESSURE/TEMPERATURE GAUGE

- Remove the casing front panel as described in section 5.1.
- Isolate the C.H. flow and return valves (19 - 18 fig. 2).
- Drain the appliance through the drain point (13 fig. 2).
- Remove the circlip securing the pressure sensor to the hydraulic group and pull out the sensor.
- Remove the fixing spring of the thermometer bulb from the C.H. flow pipe.
- Squeeze the gauge to depress the retaining clips, then ease the gauge forwards.
- Reassemble in reverse order.
  Refill and re-commission the system as described in section 4.1.

8.17 SAFETY VALVE

- Remove the casing front panel as described in section 5.1.
- Isolate the C.H. flow and return valves (19 - 18 fig. 2).
- Drain the appliance through the drain point (13 fig. 2)
- Remove the circlip securing the valve to the hydraulic group and remove the valve.
- Fit the new safety valve and re-assemble in reverse order. Refill and re-commission the system as described in section 4.1.

8.18 AUTOMATIC AIR VENT

- Remove the casing front panel as described in section 5.1.
- Isolate the C.H. flow and return valves (19 - 18 fig. 2).
- Drain the appliance through the drain point (13 fig. 2).
- Remove the circlip securing the automatic air vent to the hydraulic group.
- Fit the new automatic air vent and re-assemble in reverse order. Refill and re-commission the system as described in section 4.1.

8.19 TIME CLOCK

- Remove the casing front panel as described in section 5.1.
- Open the control panel protecting cover by removing the four fixing screws.
- Pull off the electrical connections at the back of the clock.
- Remove the two screws securing the plastic frame of the time clock to the facia panel.
- Remove the plastic frame and pull out the time clock.
- Re-assemble in reverse order and test the operation of the new clock.
- Set it to the desired settings as described in section 4.3.

9 EXPLODED VIEWS

COD. **3820044/733** TYPE **FORMAT C UK** DATE **02.09.2003** PAGE **1/4**

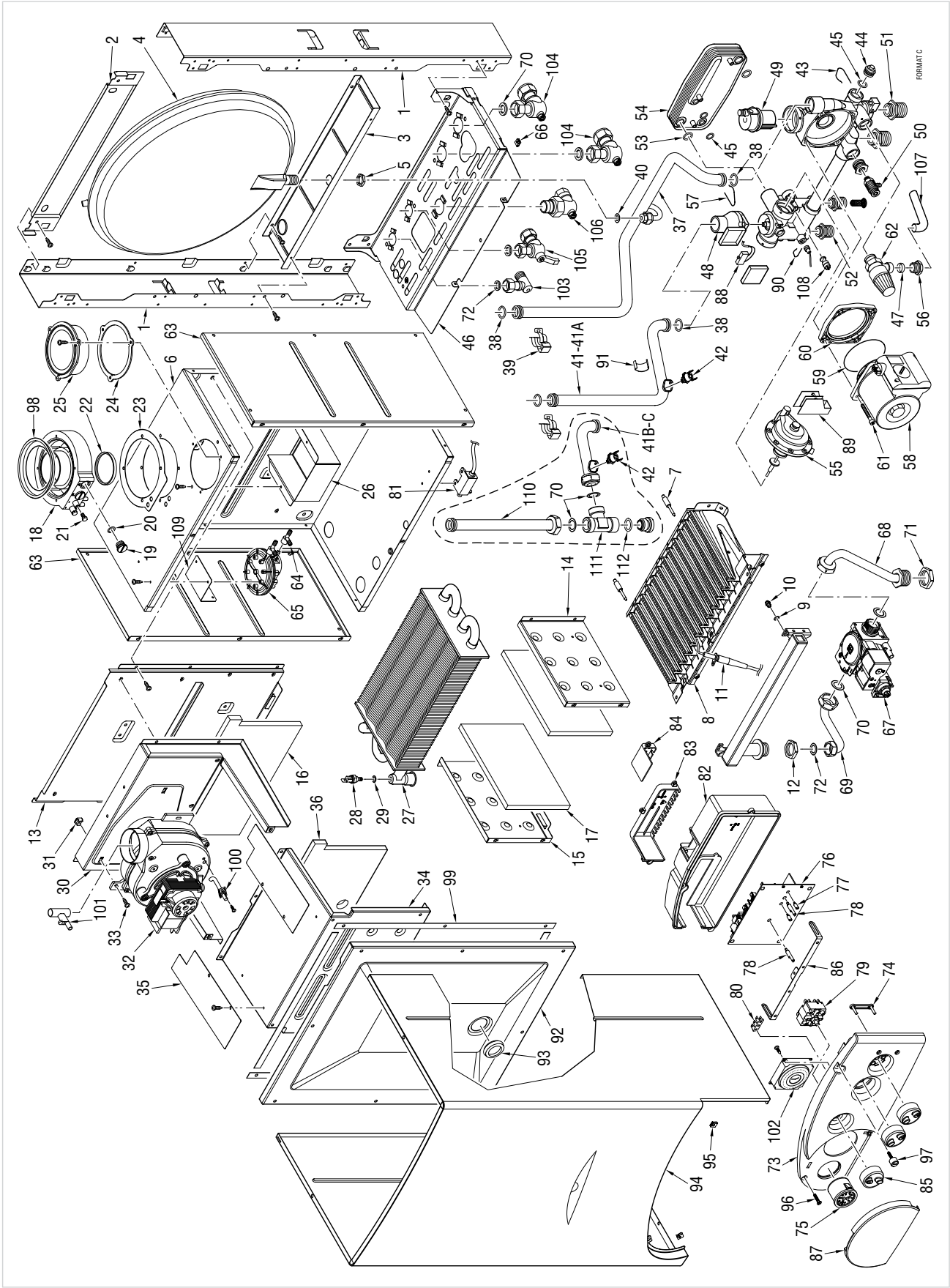

COD. **3820044/733** TYPE **FORMAT C UK** DATE **02.09.2003** PAGE **2/4**

POSITION		CODE	DESCRIPTION	MODEL	NOTE
1		6138570	Side frame part		
2		6138770	Frame assembly upper support	80C	
2 A		6138771	Frame assembly upper support	100C-110C	
3		6255430	Expansion vessel lower support	80C	
3 A		6255431	Expansion vessel lower support	100C-110C	
4	•	5139120	Expansion vessel l.6 - 3/8" M	80C	
4 A	•	5139130	Expansion vessel l.8 - 3/8" M	100C-110C	
5		6146305	Brass Nut 3/8"		
6		6288100	Sealed chamber rear panel	80C	
6 A		6288110	Sealed chamber rear panel	100C-110C	
7		6223202	Burner centering pin		
8		5190700	Main burner assembly	80C	
8 A		5190750	Main burner assembly	100C	
8 B		5190760	Main burner assembly	110C	
9		6022004	Copper washer Ø 6		
10		6154402	Main burner nozzle NP 130 natural gas		
10 A		6154410	Main burner nozzle NP 77 GLP	80C	
10 B		6154414	Main burner nozzle NP 78 GLP	100C	
10 C		6154406	Main burner nozzle NP 0,80	110C	
11	•	6235929	Ignition-ionisation electrode		
12		6146301	Brass nut 1/2"		
13		6288400	Combustion chamber rear panel	80C	
13 A		6288410	Combustion chamber rear panel	100C-110C	
14		6288500	Combust. chamber right hand side panel	80C	
14 A		6288510	Combust. chamber right hand side panel	100C	
14 B		6288511	Combust. chamber right hand side panel	110C	
15		6288600	Combust. chamber left hand side panel	80C	
15 A		6288610	Combust. chamber left hand side panel	100C	
15 B		6288611	Combust. chamber left hand side panel	110C	
16		6139772	Combustion chamber rear insulation	80C	
16 A		6139773	Combustion chamber rear insulation	100C-110C	
17		6139774	Combustion chamber side insulation		
18		6287900	Air/smoke manifold		
19		6147406	Air/smoke manifold plug M14x1.5		
20	•	6226417	O-ring 3043		
21		6242602	Air/smoke manifold screw		
22		6248803	Lip seal for Ø 60 pipe		
23		6028706	Air/smoke manifold gasket		

POSITION		CODE	DESCRIPTION	MODEL	NOTE
24		6028707	Air intake gasket		
25		6288000	Air intake		
26		6257512	Air deflector for separate ducts		
27	•	6174230	Heat exchanger	80C	
27 A	•	6174231	Heat exchanger	100C	
27 B		6174240	Heat exchanger	110C	
28	•	6231351	Plunged sensor		
29	•	6022010	Sensor gasket		
30		5190600	Smoke chamber assembly	80C	
30 A		5190610	Smoke chamber assembly	100C-110C	
31		2016020	Locked nut M4		
32	•	6225621	Fan	80C	
32 A	•	6225622	Fan	100C	
32 B		6225624	Fan	110C	
33		2000715	Screw TCB M4x10 AISI 304		
34		6288700	Combustion chamber front panel	80C	
34 A		6288710	Combustion chamber front panel	100C-110C	
35		6257511	Air deflector		
36		6139770	Combustion chamber front insulation	80C	
36 A		6139771	Combustion chamber front insulation	100C-110C	
37		6264825	C.H. return pipe	80C	
37 A		6264826	C.H. return pipe	100C-110C	
38	•	6226412	O-ring 3068		
39	•	6226601	Spring for heat exchanger connection		
40		2030226	Gasket Ø 10,2x14,8x2		
41		6264730	C.H. flow pipe	80C	up to s/n 3307069086
41 A		6264731	C.H. flow pipe	100C-110C	up to s/n 3306061007
41 B		6264747	C.H. flow pipe	80C	from s/n 3307069087
41 C		6264748	C.H. flow pipe	100C-110C	from s/n 3306061008
42	•	6146701	100°C safety stat		
43	•	6226602	Pipe fixing spring		up to s/n 3303036709
43 A		6226612	Pipe fixing double spring		from s/n 3303036710
44		6119370	Plastic plug		
45	•	6226414	O-ring 117 Ø 13,1x2,62 EP851		
46		6138870	Frame assembly lower side	80C	
46 A		6138880	Frame assembly lower side	100C-110C	
47		6100202	Ogive for pipe Ø 15		
48	•	6281502	Flow water switch spare parts		

• Recommended stock parts - Componenti da tenere a scorta

POSITION		CODE	DESCRIPTION	MODEL	NOTE
49	•	6013101	Automatic air vent		
50	•	6017210	Manual air vent 1/4"		
51		6281500	Straight fitting 3/4"		
52		6281501	Straight fitting 1/2"		
53		6226421	O-ring Dalmar R12		
54		6281522	14 plate heat exchanger kit	80C-100C	
54 A		6281525	16 plate heat exchanger kit	110C	
55	•	6281504	Divertor valve		
56		6168401	Locking nut for pipe Ø 15		
57		6226607	Pipe fixing spring		
58 A	•	6272301	Circulating pump VA 55 Dab motor	80C-100C	
58 C		6272304	Circulating pump VA 65 Dab motor	110C	
59 A	•	6028705	Gasket EP709 for Dab		
60 A		6281521	Flange + OR for Dab pump		
61		2000201	Screw M5x40		
62	•	6040201	Pressure relief valve		
63		6288200	Sealed chamber side panel		
64	•	6280510	3-ways junction	80C-100C	
65	•	5192100	Air pressure switch	80C-100C	
65 A	•	6225707	Air pressure switch	110C	
66		2013303	Fastener for self tapping screw		
67		6243820	Sit gas valve 845 SIGMA		
68		6226856	Gas inlet pipe		
69		6226945	Pipe connecting gas valve-main burner		
70		2030228	Gasket Ø 17x24x2		
71		6146302	Brass nut 3/4"		
72		2030227	Gasket Ø 12x18x2		
73		6289810	Control panel		
74		6273210	Guidelight - 2 ways out		
75		6217005	Temperature and pressure gauge		
76	•	6230687	Main PCB with ignition		
77	•	6201501	Trimmer spindle Ø 5		
78	•	6201505	Trimmer spindle Ø 6		
79	•	6260701	Rotary switch		
80		2211610	Earth faston		
81	•	6098305	Ignition transformer		
82		6289900	Control panel protecting cover		
83		6290300	Control panel cable cover		

POSITION		CODE	DESCRIPTION	MODEL	NOTE
84		6290200	Room stat connection cover		
85		6290100	Knob Ø 40		
86		6009585	Control panel bracket		
87		6290001	Flap door	80C	
87 A		6290002	Flap door	100C	
87 B		6290006	Flap door	110C	
88	•	6131401	Microswitch for flowmeter		
89		5191900	Divertor valve microswitch + support		
90		6226605	Fixing spring		
91		2051100	Retaining spring		
92		6288350	Sealed chamber front panel	80C	
92 A		6288360	Sealed chamber front panel	100C-110C	
93		6001210	Peephole		
94		6287321	Casing	80C	
94 A		6287331	Casing	100C-110C	
95	•	2013302	Fastener for self tapping screw		
96		2004510	Screw 8Px7/8"		
97		6112420	Control panel screw		
98		6028624	Air diaphragm Ø 87.5		
99		5192200	Gasket for sealed chamber		
100		6263905	Fan pressure test point	80C-100C	
100 A		6263906	Fan pressure test point	110C	
101		6223351	Venturi	80C	
101 A		6223352	Venturi	100C	
102	•	6197709	Time programmer		
103		6142330	Quarter bend 1/2" x 15		
103 A		6147231	Straight fitting 1/2" Ø 15		LPG
104		6177505	Ball cock 3/4" x 22		
104 A		6245000	Ball cock 3/4"		LPG
105		6177506	Ball cock 1/2" x 15		
105 A		6245001	Ball cock 1/2"		LPG
106		6177504	Gas cock 1/2" x 1/2"		
106 A		6063601	Gas cock 1/2"		LPG
107		6157602	Pressure relief valve drain pipe		
108		6281512	Water rate adjuster		
109		6229101	Smoke pressure switch bracket	110C	
110		6264746	Pipe conn. C.H. filter-D.H.W. exchang.	from s/n 3307069087	
111		6295500	C.H. filter 3/4"M x 3/4"M	from s/n 3307069087	

• Recommended stock parts - Componenti da tenere a scorta

Fonderie Sime S.p.A. - Via Garbo, 27 - 37045 Legnago (Verona) - Tel. +39-0442-631111 - Fax +39-0442-631292 - www.sime.it

POSITION	CODE	DESCRIPTION	MODEL	NOTE
112	6226429	O-ring 121	from s/n 3307069087	
	5191110	Complete control panel		
	6127210	Main cable L=2000		
	6245335	845 Sigma gas valve connector		
	6278671	6 pole Lumberg cable connector J6		
	6278673	6 pole Stocko cable connector J2		
	6278674	8 pole Stocko cable connector J10		
	6278675	5 pole Stocko cable connector J5		
	6278688	10 pole LUMBERG cable connector		
•	5144712	Conversion kit to LPG	80C	
•	5144713	Conversion kit to LPG	100C	
•	6233506	Fuse T1,6A 250V		
•	6281506	O-ring kit for hydraulic group		
	6281507	Split pin kit for hydraulic group		
	5185403	Convers. kit to the nat. gas 25-30 kW		
	5187312	Technyl hydraulic group		
	6280500	3-ways junct. with press. test nipple	110C	
	5144716	Conversion kit to LPG	110C	

Products reference:

8098454 Format 80 C
8098455 Format 80 C LPG
8098456 Format 100 C
8098459 Format 100 C LPG
8098461 Format 110 C

Check the correspondence with the boiler data plate.

POSITION	CODE	DESCRIPTION	MODEL	NOTE

• Recommended stock parts - Componenti da tenere a scorta

GAS CONVERSION

A kit is supplied upon request complete with the necessary change-over materials for operation with butane gas (G30) or propane gas (G31). Operate in the following manner for changing over from one gas to another:

- Close the gas cock.
- Slide out the burner unit.
- Replace the main nozzles (6) supplied in a kit, inserting the copper washer (4). Use a ø 7 spanner to perform this operation.
- Remove the "MET/GPL" connector link on the main board and set it on **"GPL"**.
- To set the values of maximum and minimum gas pressure, follow the instructions given in section 8.6.
  When the working pressures have been adjusted, reseal the regulators.
- After the conversion of the boiler, please stick onto the casing panel the plate showing the relevant feeding gas which is included in the kit.

NOTE: When reassembling components which you have removed, replace gas seals; test all gas connections after assembly using soapy water or a product made specifically for the purpose, being sure not to use open flame. Conversion must be performed by authorised personnel only.

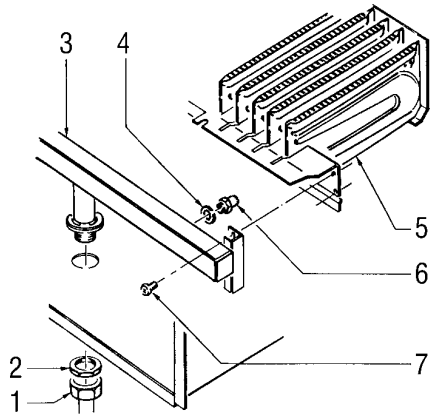

KEY
1 Swivel connection 1/2"
2 Locknut 1/2"
3 Burner manifold
4 Washer ø 6.1
5 Burners
6 Nozzle M6
7 Screw

Cod. 6272251C - 02/11 - Documentation Dpt.

Sime Ltd
1a Blue Ridge Park
Thunderhead Ridge
Glasshoughton, Castleford, WF10 4UA

Phone: 0845 9011114
Fax: 0845 9011115

www.sime.ltd.uk
Email: enquiries@sime.ltd.uk