spares & parts online
IBASIS.co.uk©

sime®

Friendly Combination Boilers

installation and servicing instructions

CONTENTS

1 TECHNICAL FEATURES AND DIMENSIONS

1.1 INTRODUCTION 1
1.2 DIMENSIONAL DETAILS
1.3 GENERAL DATA 2
1.4 HYDRAULIC CIRCUIT 3

2 GENERAL REQUIREMENTS FOR INSTALLATION

2.1 STATUTORY REQUIREMENTS 4
2.2 BOILER POSITION
2.3 FLUE TERMINAL POSITION
2.4 VENTILATION REQUIREMENTS 5
2.5 GAS SUPPLY
2.6 ELECTRICITY SUPPLY
2.7 EXTERNAL CONTROLS
2.8 WATER SYSTEMS - GENERAL
2.9 REQUIREMENTS FOR SEALED WATER SYSTEMS
2.10 D.H.W. SYSTEMS 7

3 INSTALLING THE BOILER

3.1 UNPACKING THE BOILER 8
3.2 FIXING THE WALL MOUNTING BRACKET
3.3 HANGING THE BOILER 9
3.4 FLUE AND TERMINAL PREPARATION
3.5 FLUE AND TERMINAL INSTALLATION 11
3.6 WATER CONNECTIONS
3.7 GAS CONNECTIONS 12
3.8 SAFETY VALVE CONNECTION
3.9 WIRING INSTRUCTIONS

4 COMMISSIONING AND TESTING

4.1 FILLING THE WATER SYSTEM 13
4.2 COMMISSIONING THE BOILER
4.3 SETTING THE C.H. INPUT 14
4.4 SETTING THE D.H.W. FLOWRATE
4.5 FINAL CHECKS
4.6 USER'S INSTRUCTIONS

5 ROUTINE SERVICING INSTRUCTIONS

5.1 MAIN BURNER ASSEMBLY 15
5.2 PILOT ASSEMBLY
5.3 FAN ASSEMBLY
5.4 HEAT EXCHANGER
5.5 RE-ASSEMBLY
5.6 RE-COMMISSIONING 16

6 FAULT FINDING

6.1 EARTH CONTINUITY CHECK 16
6.2 SHORT CIRCUIT CHECK
6.3 POLARITY CHECK
6.4 RESISTANCE TO EARTH CHECK
6.5 FAULT FINDING - PILOT (“FRIENDLY” MODEL) 17
6.6 C.H. MODE - FAULT FINDING (“FRIENDLY” MODEL) 18
6.7 D.H.W. MODE - FAULT FINDING (“FRIENDLY” MODEL) 19
6.8 C.H. MODE - FAULT FINDING (“FRIENDLY E” MODEL) 20
6.9 D.H.W. MODE - FAULT FINDING (“FRIENDLY E” MODEL) 21

7 INTERNAL WIRING DIAGRAMS AND VIEWS

7.1 FUNCTIONAL FLOW WIRING DIAGRAM “FRIENDLY” MODEL 22
7.2 FUNCTIONAL FLOW WIRING DIAGRAM “FRIENDLY E” MODEL 23
7.3 INTERNAL VIEW “FRIENDLY” MODEL 24
7.4 INTERNAL VIEW “FRIENDLY E” MODEL

8 REPLACEMENT OF PARTS

8.1 HEAT EXCHANGER 25
8.2 COMBUSTION CHAMBER INSULATION
8.3 FAN ASSEMBLY
8.4 MAIN BURNER
8.5 PILOT BURNER ASSEMBLY AND ELECTRODE
8.6 GAS VALVE 26
8.7 PRESSURE SWITCH 27
8.8 LIMIT THERMOSTAT
8.9 THERMOCOUPLE AND OVERHEAT THERMOSTAT FOR “FRIENDLY” MODEL
8.10 OVERHEAT THERMOSTAT FOR “FRIENDLY E” MODEL
8.11 THERMISTOR - C.H. OR D.H.W.
8.12 SPARK GENERATOR FOR “FRIENDLY”MODEL 28
8.13 IGNITION PCB FOR “FRIENDLY E” MODEL
8.14 DRIVER PCB
8.15 PUMP
8.16 D.H.W. HEAT EXCHANGER
8.17 DIVERTOR VALVE - COMPLETE
8.18 DIVERTOR VALVE - MICROSWITCH ASSEMBLY
8.19 C.H. EXPANSION VESSEL 29
8.20 SUMMER/WINTER SWITCH AND CLOCK OVER-RIDE SWITCH
8.21 PRESSURE GAUGE
8.22 SAFETY VALVE
8.23 AUTOMATIC AIR VENT
8.24 VIEWING WINDOW
8.25 TIME CLOCK

9 SHORT LIST OF PARTS 30

1 TECHNICAL FEATURES AND DIMENSIONS

1.1 INTRODUCTION

The Sime **"FRIENDLY"** is a wall mounted, fan assisted balanced flue combination boiler.
The appliance can be fuelled with natural gas and is range rated to provide C.H. outputs of between 9.7 kW (33,000 Btu/h) and 23.4 kW (80,000 Btu/h) with instantaneous D.H.W. priority. Heat output is varied according to demand by the modulating gas control on both D.H.W. and C.H.
The appliance is supplied with a concentric air and flue duct suitable for flue lengths of up to 0.83 m (32 1/2 in) although extension duct kits are available and may be used up to a flue length of 2.4 m (94 1/2 in). The combined flue and air duct can exit the boiler from either side or from the rear of the appliance. A vertical extension and additional flue elbow may be fitted.

The boiler is designed for use with sealed primary water systems and is supplied fully assembled and equipped with complete valve packs. If the wall thickness is less than 0.5 m (19 in) the appliance can be installed from inside the room without access to the external wall although a wall liner is required.
This is available as an optional extra, and full details are given in section 3. The boiler has to be used with a 240 V room thermostat (class II according to EN 60730.1).

This booklet provides instructions for the following boiler models:
– "**FRIENDLY**" with permanent pilot and electronic modulation;
– "**FRIENDLY E**": electronic ignition with intermittent pilot and electronic modulation.

1.2 DIMENSIONAL DETAILS

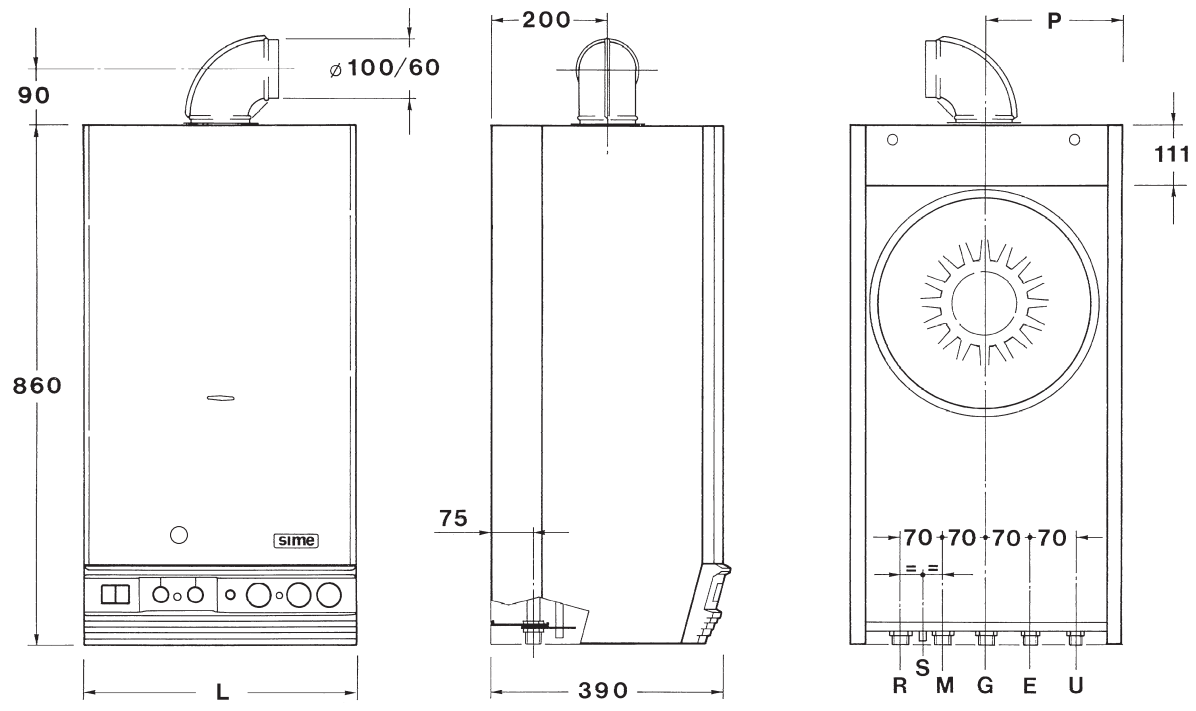

Fig. 1

TABLE 1 - Connections

R	**C.H. return**	22 mm	Compression
M	**C.H. flow**	22 mm	Compression
G	**Gas connection**	1/2 in	Bsp
E	**Cold water**	15 mm	Compression
U	**Hot water**	15 mm	Compression
S	**Safety valve**	15 mm	Copper

TABLE 2 - Minimum clearances

	mm	in
ABOVE THE APPLIANCE CASING	200	8
AT THE R.H.S.	90	3 ½
AT THE L.H.S.	30	1 3/18
BELOW THE APPLIANCE CASING	200	8
IN FRONT OF THE APPLIANCE	450	18

1.3 GENERAL DATA

TABLE 3a - Nominal boiler ratings (2 minutes after lighting) for "FRIENDLY" model

MODE		OUTPUT		INPUT (G.C.V.)		BURNER PRESSURE	
		kW	Btu/h	kW	Btu/h	mbar	inwg
CENTRAL HEATING RANGE		9.7	33,000	13.5	46,100	1.1	0.4
		10.6	36,000	14.7	50,200	1.3	0.5
		12.3	42,000	16.8	57,300	2.0	0.7
		14.1	48,000	18.8	64,100	2.7	1.0
		15.8	54,000	20.8	70,900	3.6	1.3
		17.6	60,000	22.7	77,700	4.5	1.7
		19.3	66,000	24.7	84,400	5.7	2.1
		21.1	72,000	26.7	91,100	6.8	2.5
		23.4	80,000	29.3	99,800	8.8	3.2
DOMESTIC HOT WATER	Max.	24.0	82,000	30.0	102,500	9.3	3.4
	Min.	8.8	30,000	12.5	42,800	0.8	0.3

TABLE 3b - Nominal boiler ratings (2 minutes after lighting) for "FRIENDLY E" model

MODE		OUTPUT		INPUT (G.C.V.)		BURNER PRESSURE	
		kW	Btu/h	kW	Btu/h	mbar	inwg
CENTRAL HEATING RANGE		9.7	33,000	13.5	46,100	1.9	0.7
		10.6	36,000	14.7	50,200	2.3	0.9
		12.3	42,000	16.8	57,300	3.2	1.3
		14.1	48,000	18.8	64,100	4.1	1.6
		15.8	54,000	20.8	70,900	5.2	2.1
		17.6	60,000	22.7	77,700	6.3	2.5
		19.3	66,000	24.7	84,400	7.5	3.0
		21.1	72,000	26.7	91,100	8.7	3.5
		23.4	80,000	29.3	100,000	10.5	4.2
DOMESTIC HOT WATER	Max.	24.0	82,000	30.0	102,500	11.1	4.4
	Min.	8.8	30,000	12.5	42,800	1.5	0.6

TABLE 4 - General specifications

Main burner injectors	No off		13		
	Dia	mm	1.3		
Water capacity		l	2.1	gal	0.5
Minimum water flow	C.H.	l/min	22.0	gal/min	5.0
	D.H.W.	l/min	2.1	gal/min	0.5
D.H.W. flow rate					
at a temperature rise of	30°C	l/min	11.5	gal/min	2.5
	35°C	l/min	9.8	gal/min	2.2
Static head	Minimum	bar	0.5	psi	7.3
	Maximum	bar	3.0	psi	43.5
D.H.W. pressure	Minimum	bar	0.9	psi	13.0
	Maximum	bar	7.0	psi	102
Weight	Empty	kg	48	lb	106
	Max lift	kg	45	lb	99
	Total (full)	kg	50	lb	110
Electrical supply			230 V - 50 Hz, Fused at 3 A		
Internal fuses	**"FRIENDLY"** model		Line: T 1.6 A		
	"FRIENDLY E" model		Line: F 1.6 A - P.C.B.: T 100 mA		
Maximum power consumption		Watt	150		
Maximum gas consumpt. (G20) *	C.H.	m^3/h	2.8	ft^3/h	99
	D.H.W.	m^3/h	2.9	ft^3/h	101
Max. working temperature		°C	85	F	185
Integral exp. vessel capacity		l	7	gal	1.5

TABLE 5 - Maximum flue lengths

	Rear outlet		L.H. side outlet		R.H. side outlet	
	mm	in	mm	in	mm	in
STANDARD FLUE KIT	745	29 ¼	690	27 ¼	630	24 ¾
WITH ONE EXTENSION KIT	1,560	61 ½	1,505	59 ¼	1,445	56 ¾
WITH TWO EXTENSION KITS	2,375	93 ½	2,320	91 ¼	2,260	89

1.4 HYDRAULIC CIRCUIT

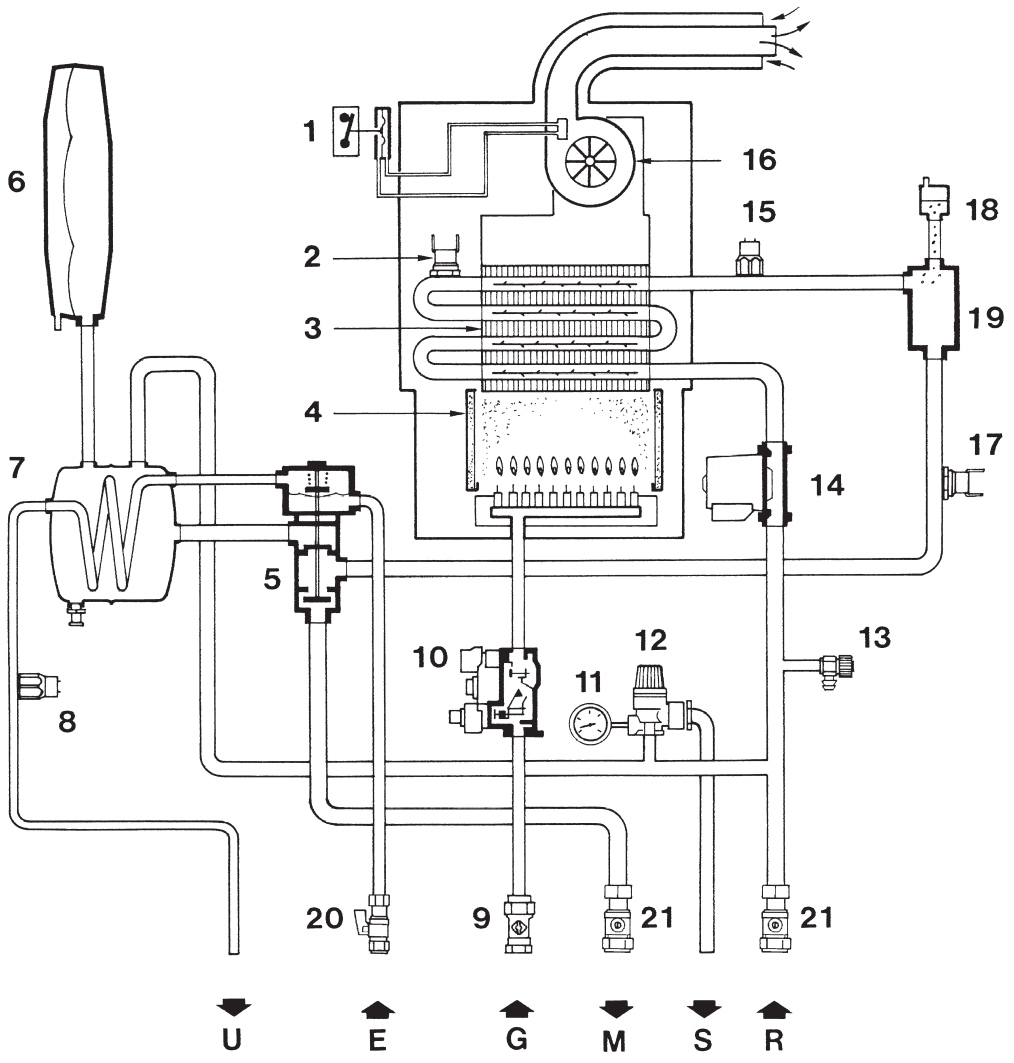

KEY

1 Air pressure switch
2 Limit thermostat
3 Heat exchanger
4 Combustion chamber
5 Divertor valve
6 C.H. expansion vessel
7 D.H.W. heat exchanger (calorifier)
8 D.H.W. thermistor
9 Gas cock
10 Multifunctional gas control
11 Pressure gauge
12 Safety valve
13 Drain cock
14 Circulating pump
15 C.H. thermistor
16 Fan
17 Safety thermostat (**"FRIENDLY"** model)
18 Automatic air vent
19 Air separator
20 D.H.W. isolation valve
21 C.H. isolation valves

Fig. 2

2 GENERAL REQUIREMENTS FOR INSTALLATION

2.1 STATUTORY REQUIREMENTS

GAS SAFETY (INSTALLATION AND USE) REGULATIONS 1984. It is the law that all gas appliances are installed by a competent person, in accordance with the above regulations. Failure to install appliances correctly could lead to prosecution. It is in your own interest, and that of safety, to ensure that the law is complied with. In addition to the above regulations, this appliance must be installed in accordance with the current IEE Wiring Regulations, Local Building Regulations, the Building Standards (Scotland) and bye laws of the local water undertaking. It should also be in accordance with the relevant recommendations in the current editions of the following British Standards and Codes of Practice: BS5449, BS5546, BS5440:1, BS5440:2, BS6798, BS6891, and BG.DM2.

Manufacturer's instructions must NOT be taken in any way as over-riding statutory obligations.

2.2 BOILER POSITION

In siting the combination boiler, the following limitations MUST be observed:

- The boiler is not suitable for external installation. The position selected for installation should be within the building, unless otherwise protected by a suitable enclosure, and MUST allow adequate space for installation, servicing, and operation of the appliance, and for air ciculation around it. (section 2.4).
- This position MUST allow for a suitable flue termination to be made.
  The combination boiler must be installed on a flat vertical wall which is capable of supporting the weight of the appliance, and any ancillary equipment.
- If the combination boiler is to be fitted in a timber framed building it should be fitted in accordance with the British Gas publication Guide for Gas Installations In Timber Frame Housing, Reference DM2. If in doubt, advice must be sought from the Local Gas Region.
- If the appliance is installed in a room containing a bath or shower, any electrical switch or control utilising mains electricity must be so situated that it cannot be touched by a person using the bath or shower. Attention is drawn to the requirements of the current I.E.E. Wiring Regulations, and in Scotland the electrical provisions of the Building Regulations applicable in Scotland.
- A compartment used to enclose the appliance MUST be designed and constructed specifically for this purpose. An existing cupboard, or compartment, may be used provided it is modified accordingly.
- Where installation will be in an unusual location, special procedures may be necessary. BS6798 gives detailed guidance on this aspect.

2.3 FLUE TERMINAL POSITION

Detailed recommendations for flue installation are given in BS5440:1. The following notes are for general guidance:

- The boiler MUST be installed so that the terminal is exposed to the external air.
- It is important that the position of the terminal allows free passage of air across it at all times.
- It is ESSENTIAL TO ENSURE, in practice that products of combustion discharging from the terminal cannot re-enter the building, or any other adjacent building, through ventilators, windows, doors, other sources of natural air infiltration, or forced ventilation/air conditioning. If this does occur, the appliance MUST be turned OFF IMMEDIATELY and the Local Gas Region consulted.
- The minimum acceptable dimensions from the terminal to obstructions and ventilation openings are specified in fig. 3.

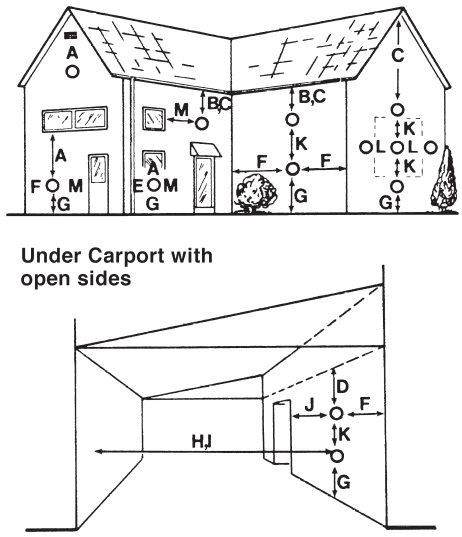

Fig. 3

TABLE 6

	Terminal position	Minimum spacing	
A	Directly below an openable window, air vent or any other ventilation opening	300 mm	12 in
B	Below guttering, drain pipes or soil pipes	75 mm	3 in
C/D	Below eaves, balconies or carport roof	200 mm	8 in
E	From vertical drain pipes or soil pipes	75 mm	3 in
F	From internal or external corners	300 mm	12 in
G	Above adjacent ground, roof or balcony level	300 mm	12 in
H	From a surface facing the terminal	600 mm	24 in
I	From a terminal facing the terminal	1,200 mm	48 in
J	From an opening in the carport (eg door, window into dwelling)	1,200 mm	48 in
K	Vertically from a terminal on the same wall	1,500 mm	60 in
L	Horizontally from a terminal on the same wall	300 mm	12 in
M	Adjacent to opening	300 mm	12 in

– If the terminal discharges into a pathway or passageway check that combustion products will not cause nuisance and that the terminal will not obstruct the passageway.
– Where the lowest part of the terminal is fitted less than 2 m (78 in) above ground, above a balcony or above a flat roof to which people have access, the terminal MUST be protected by a purpose designed guard. Terminal guards are available from Quinnell, Barrett, and Quinnell, Old Kent Road, London. State model C2, (G.C. Part No 382946).
– Where the terminal is fitted within 850 mm (34 in) of a plastic or painted gutter, or 450 mm (18 in) of painted eaves, an aluminium shield at least 1,500 mm (59 in) long must be fitted to the underside of the painted surface.
– The air inlet/outlet flue duct MUST NOT be closer than 25 mm (1 in) to combustible material.
– In certain weather conditions the terminal may emit a plume of steam.
This is normal but positions where this would cause a nuisance should be avoided.

2.4 VENTILATION REQUIREMENTS

Detailled recommendations for air supply are given in BS5440:2.
The following notes are for general guidance:
– It is not necessary to have a purpose provided air vent in the room or internal space in which the appliance is installed.
– If the boiler is to be installed in a cupboard or compartment, permanent air vents are required for cooling purposes in the cupboard or compartment at both high and low levels. Both air vents must communicate with either the same internal room/space or be on the same wall to external air. The following table gives the minimum effective areas of the vents.

TABLE 7

Position of air vent.	Air from room int. space		Air direct from outside	
HIGH LEVEL	293 cm^2	48 in^2	147 cm^2	24 in^2
LOW LEVEL	293 cm^2	48 in^2	147 cm^2	24 in^2

2.5 GAS SUPPLY

– The Local Gas Region should be consulted at the installation planning stage in order to establish the availability of an adequate supply of gas.
– An existing service pipe MUST NOT be used without prior consultation with the Local Gas Region.
– A gas meter can only be connected by the Local Gas Region or by a Local Gas Region Contractor.
– An existing meter should be of sufficient size to carry the maximum boiler input plus the demand of any other installed appliance. BS6891: 1988.The gas required for the boiler is 2.9 m^3/h (101 ft^3/h).
– The governor at the meter must give a constant outlet pressure of 20 mbar (8 inwg) when the appliance is running.
– The gas supply line should be purged.

NOTE: Before purging open all doors and windows, also extinguish any cigarettes, pipes, and any other naked lights.

– The complete installation must be tested for gas soundness.
– It is important to assure an adequate gas supply to the appliance. No more than 3 m of 15 mm pipe should be used. Where the supply exceeds 3 m the pipe should be suitbly sized only reducing to 15 mm for the last 3 m prior to the appliance.

2.6 ELECTRICITY SUPPLY

The appliance MUST be earthed. A mains supply of 230 V ~ 50 Hz single phase is required.
All external controls and wiring MUST be suitable for mains voltage.

Wiring should be in 3 core PVC insulated cable NOT LESS than 0.75 mm^2 (24 x 0.2 mm) to BS6500, Table 16.
Wiring external to the boiler MUST be in accordance with current I.E.E. Wiring Regulations and local regulations.
The supply connection to the flying lead provided MUST be made to a fused double pole switch, having a 3 mm (1/8 in) contact separation in both poles, serving only the boiler and system controls.
The fuse rating should be as per the original instructions.
This connection should be readily accessible and be made adjacent to the boiler (except in the case of bathroom installations for domestic boilers where the point of connection to the mains MUST be outside of the bathroom).

2.7 EXTERNAL CONTROLS (Refer to section 3.9)

"FRIENDLY" model
The boiler is intended for use with a 240 V room thermostat. The connection is made inside the control box across terminals 40 and 41.

"FRIENDLY E" model
The voltage between **terminals 40 and 41 is 24 V**, hence for satisfactory operation of the compensating resistor in the thermostat it is necessary to use a 24 V room thermostat. A mains room thermostat can be used, but the compensator would not function correctly, hence the room temperature swing would be greater.

2.8 WATER SYSTEMS - GENERAL

– This appliance is designed for connection to sealed central heating water systems.
– Check that the mains water pressure is sufficient to produce the required D.H.W. flow rate, but does not exceed the maximum D.H.W. pressure (table 4). If necessary, a pressure reducing valve must be fitted to the mains supply before the D.H.W. inlet connection.

2.9 REQUIREMENTS FOR SEALED WATER SYSTEMS

The heating system design should be based on the following information:

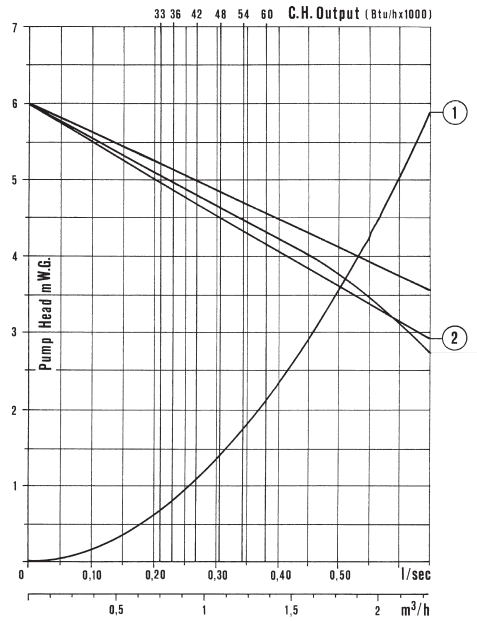

KEY
1 Boiler resistance
2 Available Head for C.H. for MYSON CP 51 pump

Fig. 4

a) The available pump head is given in fig. 4.
The type of pump fitted is easily identified after removal of the front panel.
b) A minimum flow rate corresponding to a heating differential of 11°C must be obtained at all times.
c) A heating by-pass should be fitted to ensure condition (b) is satisfied.
If thermostatic radiator valves are to be installed, at least one radiator should be without a thermostatic valve (usually the bathroom radiator).
d) A sealed system must only be filled by a competent person using one of the approved methods shown in fig. 6. The system design should incorporate the connections appropriate to one of these methods.
e) The following paragraphs outline the specifications of the items fitted to the boiler.

2.9.1 Pump

The available head shown in fig. 4 is that in excess of the appliance hydraulic resistance, i.e. that available for the system at any given heating load up to the maximum output in C.H. mode. Never reduce the pump speed below maximum as this will reduce D.H.W. output.
The pump speed is indicated on the side of the pump speed selector switch (if fitted).

TYPICAL SYSTEM DESIGN

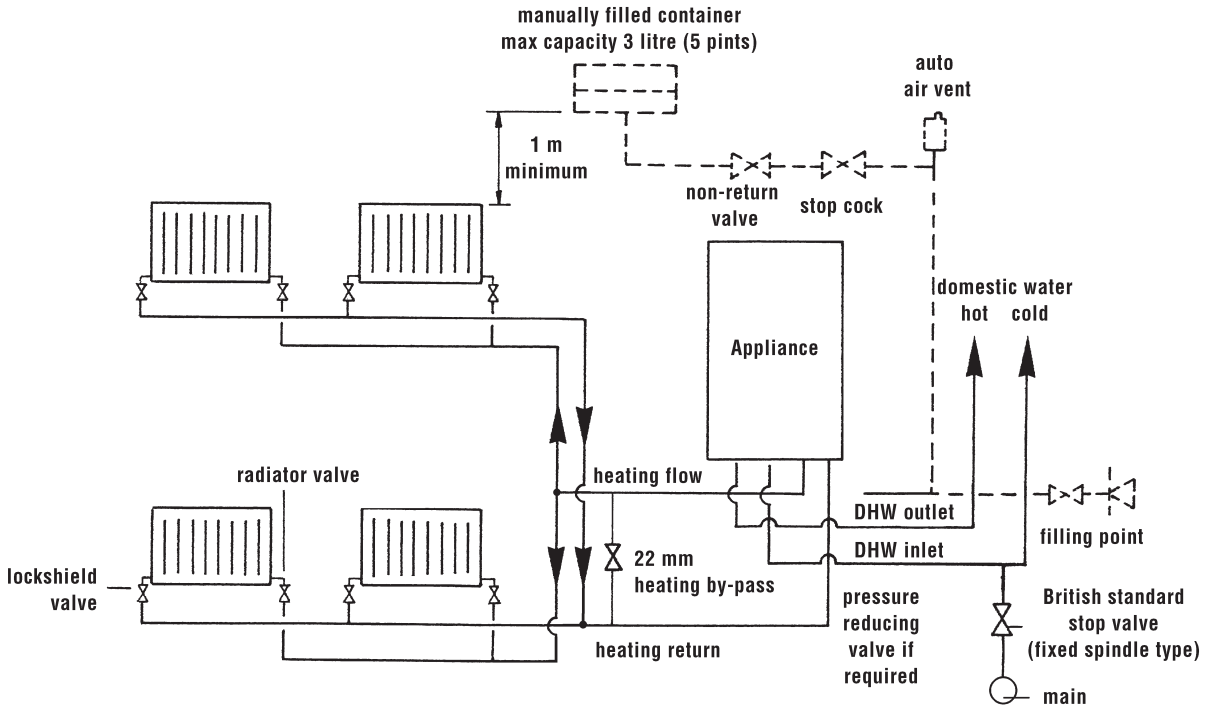

NOTE:
– A drain cock should be installed at the lowest point of the heating circuit and beneath the appliance.

Fig. 5

ALTERNATIVE METHODS OF FILLING A SEALED SYSTEM

METHOD 1 (complies with BS6798.1987)

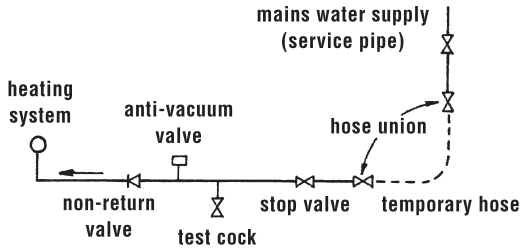

METHOD 2 (complies with BS6798.1987)

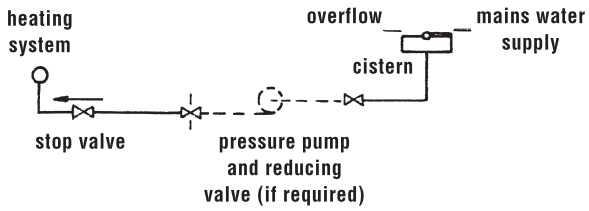

NOTES:

- When it is not possible to avoid a situation where the initial system pressure and static head are equal a manually fitted top up container should be fitted as shown above.
  Take note of the requirements relative to container capacity: height above system, inclusion of a non-return valve, stop cock and automatic air vent in the feed pipe, as shown in fig. 5.
  Note also the feed pipe connection is made to the heating return as close to the appliance as possible.
- The Local Water Undertaking MUST approve ALL connections between the system and a water storage cistern or water main supplying D.H.W.

Fig. 6

2.9.2 System volume (total water content)

The following table gives the maximum system volume that the integral 7 l expansion vessel can sustain under different charge pressure conditions.
If the system volume exceeds that shown, an additional expansion vessel must be fitted and connected to the heating system primary return pipe as close as possible to the appliance.
If an extra vessel is required, ensure that the total capacity of both vessels is adequate. Further details are available in the current issues of BS5449 and BS6798.

NOTE: If the pressure gauge indicates 2.65 bar or greater when the appliance is at maximum temperature with all radiators in circulation an extra expansion vessel is required.

TABLE 8

Vessel charge and initial system pressure	bar	0.5	1.0	1.5
	psi	7.3	14.5	21.8
Total water content of system using 7 l (1.54 gal) capacity expansion vessel supplied with appliance	l	87	64	44
	gal	18.5	14.0	9.7
For systems having a larger capacity multiply the total system capacity in litres (gallons) by the factor to obtain the total minimum expansion vessel capacity required litres (gallons)		.0833	.109	.156

2.9.3 Pressure gauge

A pressure gauge is mounted on the appliance facia panel.

2.9.4 Safety valve

A safety valve set at 3 bar (43.5 psi) is fitted to the appliance and a discharge pipe is routed to outside of the appliance.
This discharge pipe should be extended to terminate safely away from the appliance and where a discharge would not cause damage to persons or property but would be detected.
The pipe should be able to withstand boiling water, be a minimum of 15 mm in diameter, and not include any horizontal runs prone to freezing.

2.10 D.H.W. SYSTEMS

- The authority of the local Water Company should be obtained before the appliance is connected to the cold water mains supply.
  Check that the mains supply pressure is within the prescribed limits (section 1.3).
  If necessary, a pressure reducing valve should be fitted to the mains supply before the D.H.W. inlet connection.
- The final 600 mm (24 in) of the mains supply pipe to the boiler must be copper.
- A maximum D.H.W. flow rate of 10 l/m (2.2 gpm) is recommended. Higher flow rates will not damage the

appliance but may lower the water temperature below an acceptable level.
- If the appliance is installed in an area where the temporary hardness of the water supply is high, say over 150 ppm, the fitting of an in line scale inhibitor may be an advantage. Consult the Local Water Undertaking if in doubt.
- Devices capable of preventing the flow of expansion water: e.g. non return valves and/or loose-jumpered stop cocks should not be fitted unless separate arrangements are made for expansion water.
- If a non-return valve is fitted in the incoming water supply - e.g. in line with a scale inhibitorthen the optional D.H.W. expansion vessel MUST be obtained and fitted at the connection provided in the D.H.W. circuit within the casing of the appliance (section 3.6.2.)
- For specific information relating to fittings (eg. Showers, washing machines etc.) suitable for connection in the D.H.W. circuit, consult the Local Water Undertaking, however the following information is given for guidance.

2.10.1 Domestic hot/cold water supply taps and mixing taps

All equipment designed for use at mains water pressure is suitable.

2.10.2 Showers

Any mains pressure shower is suitable, but if the unit has a loose head which may become immersed in bath water either an anti-syphonage device must be fitted, or the length of the flexible hose must be reduced so that it cannot fall closer than 13 mm (1/2 in) to the top of the bath.

2.10.3 Bidets

Providing that the appliance is of the over-rim flushing type, the outlets are shrouded and it is impossible to attach a temporary hand held spray, no anti syphonage device is necessary.

3 INSTALLING THE BOILER

3.1 UNPACKING THE BOILER

The standard appliance is supplied in two separate cardboard cartons. In addition up to two extension duct kits may be used. If the appliance is to be installed without access to the outside wall, the wall liner will also be required. Unpack each carton and check the contents against the following lists:

Appliance package:

- combination boiler (assembled);
- installation and servicing instructions;
- users instructions;
- wall mounting templates (paper);
- wall mounting bracket assembly ;
- fixing screws with wall plugs;
- plastic bags containing:
  - gas service cock;
  - C.H. F/R isolation valves;
  - D.H.W. isolation valve;
  - D.H.W. compression fitting;
  - aluminium ring;
  - associated fixing screws;
  - associated gaskets;
  - safety valve discharge pipe.

Flue Package:

- inner duct (flue) c/w flue terminal and centering springs;
- outer duct (air);
- junction collar with protective metal sleeve;
- flue elbow with gasket;
- rubber sealing ring.

Extension duct kit(s) (optional):

- inner duct c/w springs;
- outer duct;
- junction collar with protective metal sleeve.

3.2 FIXING THE WALL MOUNTING BRACKET

Before installing the appliance ensure that the chosen location is suitable (section 2.2) and that the requirements for flue position, (section 2.3), and minimum clearances, (table 2) are satisfied. These minimum clearances are essential to provide access for servicing, and are included on the wall mounting templates.
- Open the paper wall mounting templates. If a rear flue is to be used, discard the side templates and secure the rear template in the desired position. For a side flue application, secure both the rear and appropriate side template in position.
- Mark the position of the two wall mounting bracket fixing holes, the two lower frame fixing holes, and the flue/air duct hole on the appropriate wall(s).
- Remove the template(s) and drill the top two fixing holes using a 10 mm masonry drill and the bottom two fixing holes using a 6 mm masonry drill. Fit the plastic plugs provided.
- Cut the hole in the wall for the flue/air duct. The diameter should not be less than 100 mm (4 in) and must be horizontal. If the hole is not accessible from the outside of the building, its minimum diameter should be sufficient to allow the insertion of the wall liner (130 mm - 5 $^1/_4$ in diameter) which will be sealed with mortar. Refer to fig. 13. (The wall liner is available as an optional extra).

– Accurately measure the wall thickness, and note this dimension for later use.
– Secure the wall mounting bracket in position using the screws provided. Ensure that it is the correct way up, as indicated in fig. 7.

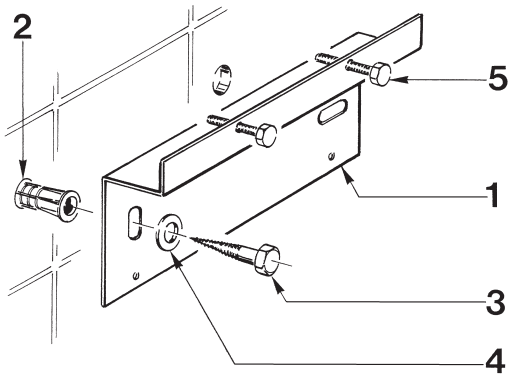

KEY
1 Wall mounting bracket
2 Plastic wall plug (2 Off)
3 Woodscrew (2 Off)
4 Washer (2 Off)
5 Adjustment screw (2 Off)

Fig. 7

3.3 HANGING THE BOILER

– Remove the outer casing as follows with reference to fig. 8:
  – remove the front panel fixing screw (6);
  – remove the front panel (5) by pulling forwards, starting at the top corners;
  – unscrew the fixing screws (1) securing each side panel (3) and (4) (two each), and remove the panels by sliding upwards to release the supporting hooks.

– Lift the appliance into position. The upper cross member locates onto the wall mounting bracket. Slide the appliance sideways (if necessary) until the lower frame fixing holes line up with the wall plugs.
– Screw in the wall mounting bracket adjusting screws until the appliance is secure and vertical, then pivot the control box downwards by removing the two rear screws as shown in fig. 14 and fit the two lower fixing screws to prevent any further movement using a long screwdriver through the clearance holes provided. Pivot the control box back into position and resecure with the two screws.

3.4 FLUE AND TERMINAL PREPARATION

If the wall thickness is less than 0.5 m (19 in) the flue/air duct may be fitted without access to the outside wall providing that the optional wall liner kit is used.
(This consists of a steel pipe, 0.5 m long and 129 mm outside diameter with a 1 mm wall thickness.)

3.4.1 Flue/air duct lenghts

– Determine whether an extension duct is required with reference to the **Z** dimension shown in figs. 10 - 11 - 13. Alternatively wall thickness information is given in Table 5.

Z Dimension UP TO 945 mm.
No extension duct required.
Z Dimension greater than 945 mm and up to 1,760 mm.
One extension duct kit required.
Z Dimension greater than 1,760 mm and up to 2,575 mm. Two extension duct kits required.
Z Dimension greater than 2,575 mm.
NOT PERMITTED.

– If no extension ducts are required, procede to 3.4.2.
– If an extension duct or ducts is/are to be used, the flue

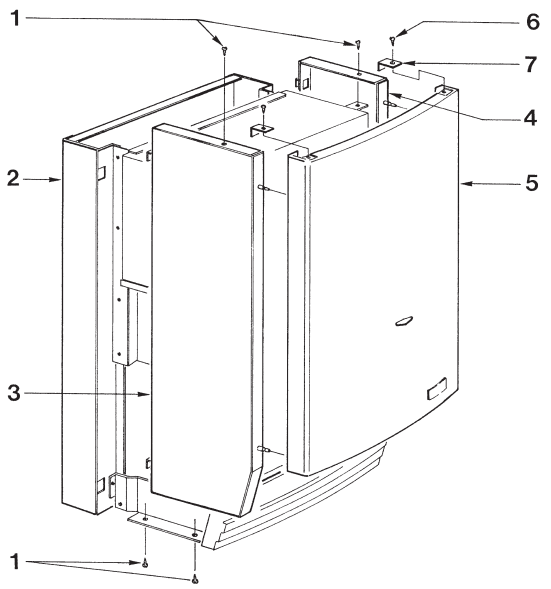

KEY
1 Side panel screws
2 Rear frame
3 L.H. side panel
4 R.H. side panel
5 Front panel
6 Front panel fixing screws
7 Fixing screws steel plates

Fig. 8

and air ducts should be joined before proceeding to the next section. The extension ducts should be joined to each other and to the standard ducts using the following procedure (fig. 9):

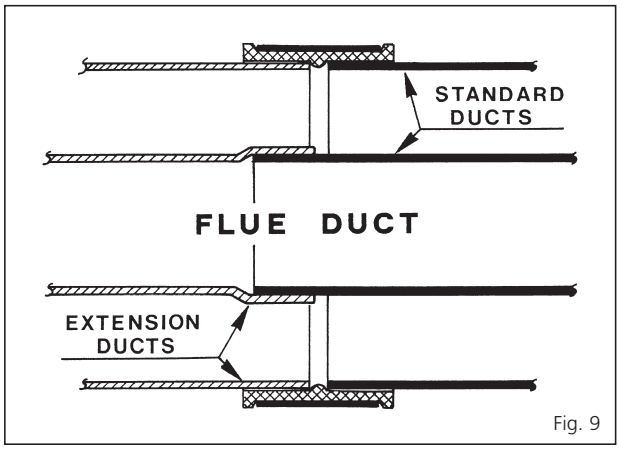

Fig. 9

– For the flue ducts in turn, push the plain end of the standard and (if using two extensions) extension duct into the swaged end of the extension duct(s).
– Introduce an air duct in the clamp.
  Join the air ducts (larger ducts) and tighten the screws an the clamp to connect them.

3.4.2 Cutting the flue/air duct to the correct length

Rear flue outlet (Only - fig. 10)

– Select the air duct (larger duct) and starting at the formed end, 'mark off' the length to be cut which is the wall thickness **X** + 130 mm (5 $^{3}/_{18}$ in).

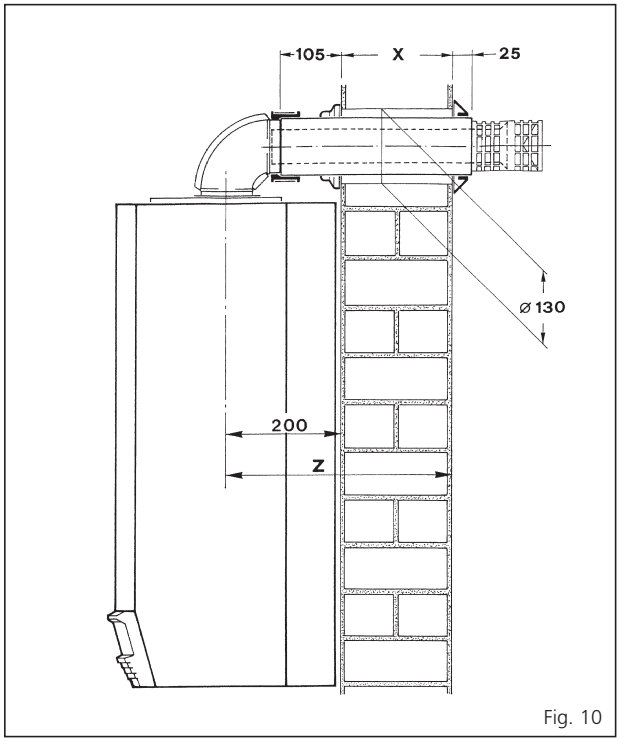

Fig. 10

Side flue outlet (Only - fig. 11)

– Select the air duct (larger duct) and starting at the formed end, 'mark off' the length to be cut which is the wall thickness **X** + the clearance **Y** plus 155 mm (6 $^{3}/_{18}$ in).

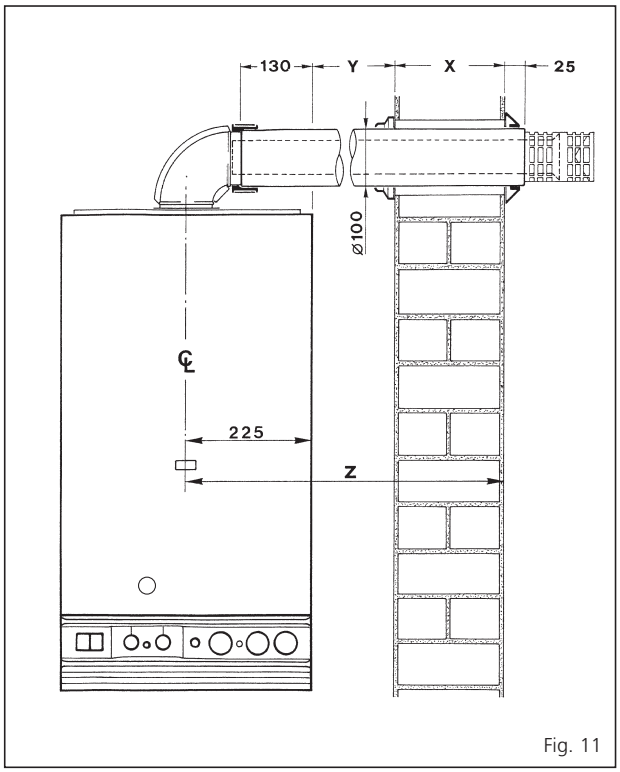

Fig. 11

All installations

– Cut the air duct square to the mark and remove all burrs and sharp edges.
– Refer to fig. 12. Hold the air duct at the plain end, and slide the flue duct (small duct) inside the air duct (terminal first) until the external swage of the terminal stops against the internal swage of the air duct, then mark off the length to be cut which leaves 20 mm protruding flue duct.
– Remove and cut the flue duct square to the mark and remove all burrs and sharp edges.

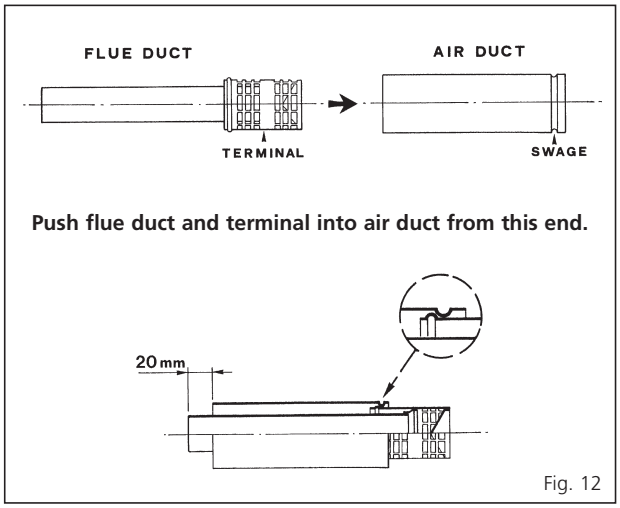

Fig. 12

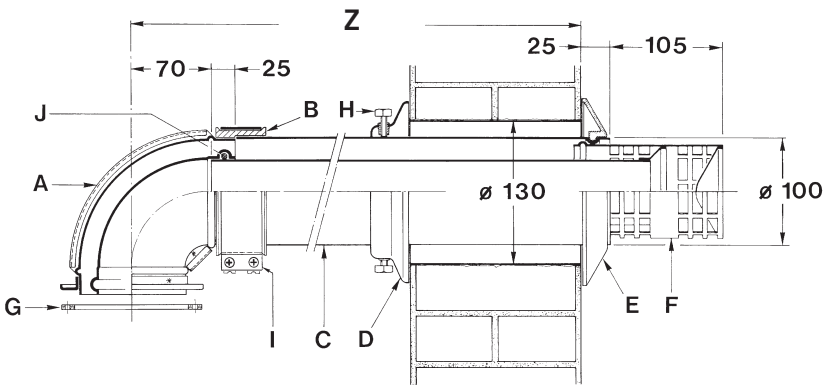

KEY
A Elbow flange
B Junction collar
C Outer duct
D Aluminium ring
E Rubber sealing ring
F Inner duct c/w terminal
G Gasket ø 95/125 x 2
H Fixing screw
I Protective metal collar
J Inner "O" ring

Fig. 13

3.5 FLUE AND TERMINAL INSTALLATION

3.5.1 Installations from inside the room

Wall thicknesses up to 0.5 m (19 in) only, Hole diameter sufficient to accept wall liner. 130 mm (5 1/4 in) if optional kit is used fig. 13.

- A wall liner, 127 mm (5 in) internal diameter, 500 mm (19 in) long is available as an optional extra for use when fitting the flue/air duct from inside the building, (or where it is required to seal the hole through a cavity wall). Cut the liner to the wall thickness, insert into the hole, and seal with mortar at inner and outer wall faces. Access to the outside can be made by inserting one's hand through the liner.
- Fit the rubber sealing ring into the swaged groove in the air duct as shown in fig. 13. Ensure that it is the correct way around and spray the outside surface with talcum powder or soap solution to reduce friction.
- Push the flue duct assembly into the air duct until the external swaged ring on the flue terminal stops against the internal swage on the air duct (fig. 12).
- From inside the building slide the duct assembly into the wall liner until the sealing ring passes completely through the wall, then pull the air duct back until the ring is pulled up to the wall surface.
- Procede to section 3.5.3.

3.5.2 Installations from outside the building only (Hole diameter 100 mm - 4in)

- Push the flue duct assembly into the air duct until the external swaged ring on the flue terminal stops against the internal swage on the air duct (fig. 12).
- From inside or outside the building, slide the duct assembly into the wall until the sealing ring forms a good seal against the outside wall.
- Fit the rubber sealing ring into the swaged groove in the air duct as shown in fig. 13. Ensure that it is the correct way around.

3.5.3 Connecting the duct assembly All installations

- With reference to fig. 13, slide on the aluminium retention ring (D), check that the rubber sealing ring (E) is pulled up to the wall and that the duct assembly is horizontal, then secure the aluminium retention ring to the air duct using the two screws (H) provided. Do not overtighten the screws.
- Push the junction collar (B) over the air duct until the air duct touches the inner part of the collar where the diameter becomes smaller.
- Push the elbow socket into the junction collar and onto the flue duct.
- Fit the protective metal collar (I) over the juction collar.
- Release the two spring clips and remove the four fixing screws securing the sealed chamber front panel then remove the panel.
- Place the gasket (G) under the flange of the elbow and fit the elbow onto the top of the appliance, taking care to ensure that the silicon seal on the fan outlet correctly engages and forms a seal at its joint with the elbow. This must be checked from inside the sealed chamber.
- Secure the elbow onto the top of the appliance using the four screws and washers provided, and refit the sealed chamber front panel.

3.6 WATER CONNECTIONS

3.6.1 Central heating connections

- Fit the two C.H. isolation valves using the gaskets supplied to the flow and return connections as shown in fig. 2.
  The pipe connections are labelled on the lower part of the boiler.
- Connect the C.H. pipework as required.

3.6.2 D.H.W. connections

- Fit the D.H.W. isolation valve to the cold water inlet connection as shown in fig. 2.
- Fit the union connection to the D.H.W. outlet.
- Connect the D.H.W. pipework as required.
- If a D.H.W. expansion vessel is to be fitted, remove the screwed plug from the D.H.W. expansion vessel connection on the left of the appliance, and screw the vessel into position using a jointing compound suitable for potable water.

3.7 GAS CONNECTIONS

– Screw the gas cock into the internal thread in the gas inlet connection using a suitable jointing compound.
– Connect the gas supply pipe.

3.8 SAFETY VALVE CONNECTION

– The appliance safety valve is located towards the R.H.S. of the boiler and the discharge pipe is supplied loose. Remove the two screws TCB M4 x 10 (2 fig. 14) and lower the control box to improve access.
– Screw the discharge pipe to the valve outlet using a suitable jointing compound, and extend the pipe to ensure that any discharge from the safety valve is safely routed to a drain. The discharge pipe should be a minimum of 15 mm copper, and should avoid sharp corners or upward pipe runs where water may be retained.

3.9 WIRING INSTRUCTIONS (Refer to sections 2.6 - 2.7)

The external wiring is connected to the boiler via a lead cable situated behind the control box at the L.H.S.
– If a room thermostat is to be used, remove the link between terminals 40 and 41 in the terminal provided therein and replace it with the room thermostat.
– Carry out electrical system checks through a suitable test meter: earth continuity, polarity, resistance to earth and short circuit.
– Resecure control box.

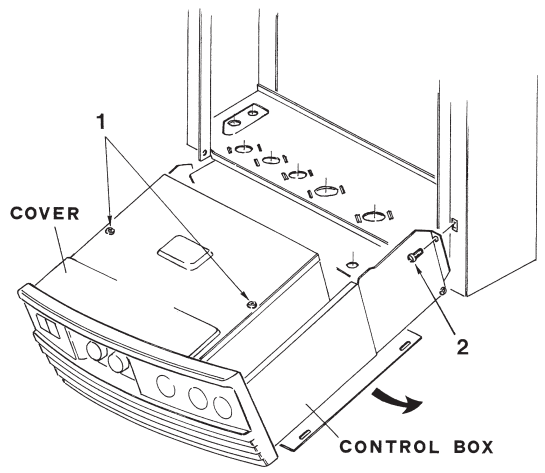

KEY
1 Self tapping screw
2 Screw TCB M4 x 10

Fig. 14

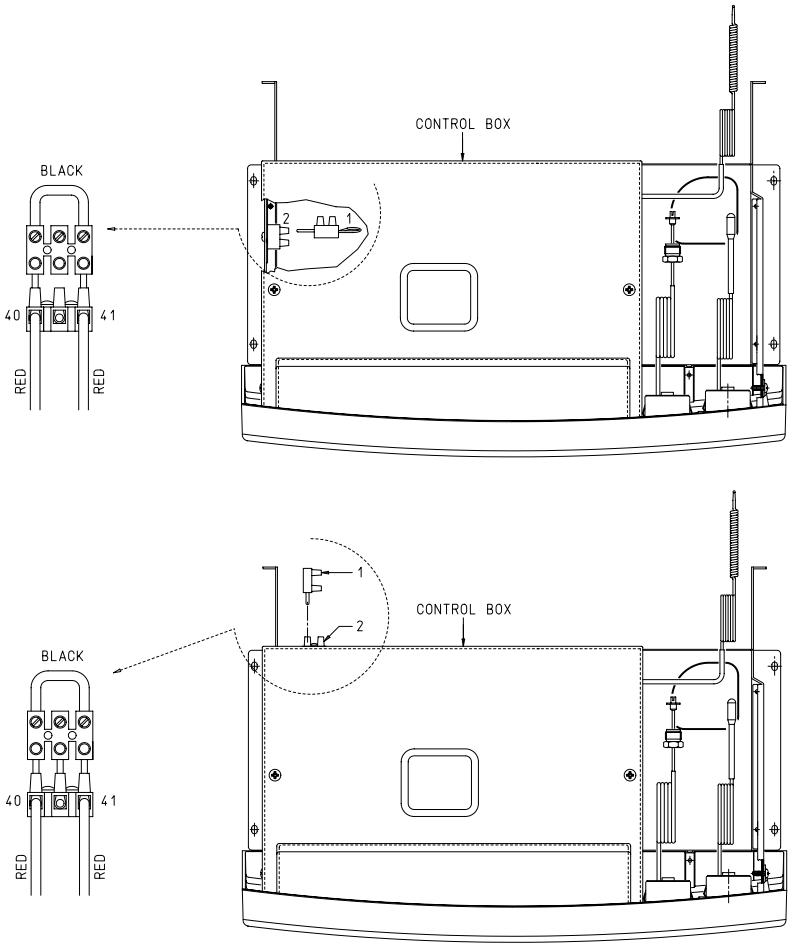

"FRIENDLY" model

KEY
1 3 pins socket
2 3 pins plug

"FRIENDLY E" model

Fig. 15

4 COMMISSIONING AND TESTING

Before commissioning the appliance, the whole gas installation including the meter MUST be purged and tested for gas soundness in accordance with BS6891: 1988.

IMPORTANT: open all doors and windows, extinguish naked lights, and DO NOT SMOKE whilst purging the gas line.
Before commencing the commissioning procedure, ensure that the gas service cock is turned on, the electricity supply is isolated, and that the D.H.W. and C.H. isolation valves are in the closed position.

4.1 FILLING THE WATER SYSTEM

- Open the C.H. flow and C.H. return valves (21 fig. 2).
- Loosen the automatic air vent cap (18 fig. 2) on the flow pipe near the heat exchanger.
- Open all radiator valves and system air vents.
  Fill the system with water using one of the approved methods described in section 2.9 to about 0.5 bar greater than the system design pressure. Close all air vents. Do not forget the one near the pump!
- Check the system for water soundness.
- Completely drain the appliance and heating system, thoroughly flush the system, and refill the system design pressure.
- Open the D.H.W. inlet valve, open any hot tap, clear of air bubbles. Close hot tap.

4.2 COMMISSIONING THE BOILER

4.2.1 V4600C mounted on "FRIENDLY" model

- Remove the screw and connect a pressure gauge to the burner pressure test point on the gas valve (5 fig. 16/a).

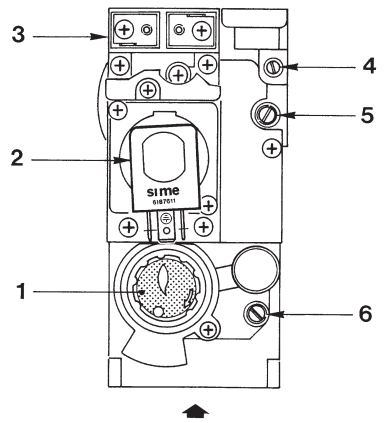

KEY

1	Control button	4	Inlet pressure test point
2	Modulating coil	5	Burner pressure test point
3	Electric operator	6	Pilot adjusting screw

Fig. 16/a

- Set the Summer/Winter switch (2 fig. 24/a) to SUMMER. Check the gas service cock is ON. Ensure that the time clock is ON and the room thermostat is calling for heat. Switch on the electrical supply to the boiler. Fully depress the gas valve control button and hold in. After approximately 15 secs. a spark will light the pilot (check through viewing window). After a further 20 secs. release the button and the pilot should remain alight.
  NOTE: on initial lighting it may take some time to purge the air from the pilot pipe.
  Check the pilot flame fully envelops 5 - 8 mm of the thermocouple tip. If necessary adjust using regulating screw on gas valve (6 fig. 16/a). Turn the D.H.W. temperature adjuster fully clockwise to maximum (3 fig. 17). Fully open any D.H.W. tap and the burner will light.
- Allow the boiler to run for at least 2 minutes and check that the burner pressure is as stated in section 1.3. The D.H.W. burner pressure is factory set and should not require adjusting. If the burner pressure is low, check that the appliance has not begun to modulate (this will occur if the D.H.W. flow rate is low. If modulation is suspected, open all D.H.W. taps to maximise flow and recheck burner pressure). If it is necessary to adjust the D.H.W. burner pressure the method is described in section 8.6.
- Reduce the D.H.W. draw off rate to the minimum necessary to maintain the burner alight by carefully adjusting the D.H.W. inlet valve and check that the burner pressure decreases in response to D.H.W. temperature rise. Fully open the inlet valve.
- Close the D.H.W. tap and ensure that the burner is extinguished and the pump stops.

4.2.2 SIT 837 TANDEM mounted on "FRIENDLY E" model

- Remove the screw and connect a pressure gauge to the burner pressure test point on the gas valve (fig. 16/b).

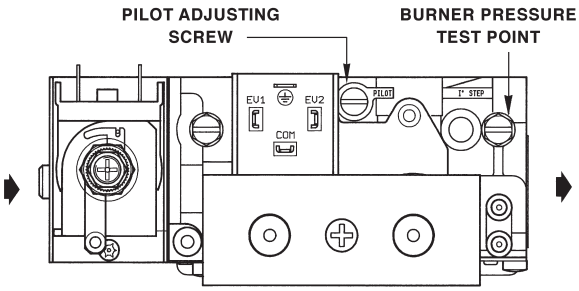

Fig. 16/b

- Ensure that the Summer/Winter switch on the facia panel (2 fig. 24/b) is set to the SUMMER position " ✺ " (D.H.W. Only), turn the D.H.W. thermostat (3 fig. 17) to maximum (fully clockwise), and turn on the electrical supply. Fully open any D.H.W. tap and the burner will light.
- Allow the boiler to run for at least 2 minutes and check that the burner pressure is as stated in section 1.3.
  The D.H.W. burner pressure is factory set and should not require adjusting. If the burner pressure is low, check that the appliance has not begun to modulate (this will occur if the D.H.W. flow rate is low. If modulation is suspected, open all D.H.W. taps to maximise flow and recheck burner pressure). If it is necessary to adjust the D.H.W. burner pressure the method is described in section 8.6.

– Reduce the D.H.W. draw off rate to the minimum necessary to maintain the burner alight by carefully adjusting the D.H.W. inlet valve and check that the burner pressure decreases in response to D.H.W. temperature rise. Fully open the inlet valve.
– Close the D.H.W. tap and ensure that the burner is extinguished and the pump stops.

4.3 SETTING THE C.H. INPUT

– Turn the Summer/Winter switch (2 fig. 24) to the WINTER position "❄" and turn the time clock override switch (1 fig. 24) to the override position "●".
  Ensure that the room thermostat (if fitted) is calling for heat. Turn the C.H. thermostat knob (1 fig. 17) to maximum (fully clockwise) and the burner will light.
– Allow the boiler to run for at least 2 minutes and check the burner pressure. The heating input is factory set as follows:
  – 23 kW (78,750 Btu/h) for **"FRIENDLY"** model which is required to give 17.9 kW (61,200 Btu/h) output.
  – 20.9 kW (71,300 Btu/h) for **"FRIENDLY E"** model which is required to give 16.2 kW (55,400 Btu/h) output.
– If the heating output is to be adjusted, proceed as follows:
  – refer to section 1.3 and establish the desired burner pressure;
  – remove the black plastic cover protecting the potentiometer (2 fig. 17);
  – set the burner pressure as required using a small screwdriver on potentiometer (2 fig. 17). Rotate the screw anti-clockwise to reduce the burner pressure;
  – operate the Summer/Winter switch a few times and check that the correct burner pressure is maintained.
– Replace the black plastic cover over potentiometer.
– Check that the pilot flame is the correct length (12 mm - 1/2 in) and touches the electrode. To do this isolate the electrical supply, remove the L.H. mains plug from the gas valve (fig. 16) and restore the mains supply. The pilot will light, but not the main burner. Check the pilot flame and adjust if necessary. See fig. 16 for the pilot adjusting screw. (anticlockwise rotation increases pilot length), then isolate the electrical supply, refit the L.H. mains plug and restore the electricity supply again.
– Set the time clock override switch (1 fig. 24) to CLOCK position "◷" and check the operation of the time clock and room thermostat (if fitted).
– To set the time clock proceed as follows:
  – push in the setting tabs around the clock dial at the times corresponding to when the heating is desired ON;
  – set the clock to the correct time by rotating the dial clockwise until the arrow corresponds to the current time.

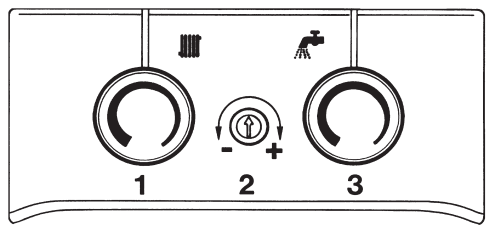

Fig. 17

4.4 SETTING THE D.H.W. FLOWRATE

A restrictor screw (fig. 18) is fitted to reduce the D.H.W. flow to that which will give an acceptable D.H.W. temperature. To set the D.H.W. flow, procede as follows:
– select Summer position " ☀ " and turn the D.H.W. thermostat (3 fig. 17) to max. ;
– fully open the D.H.W. tap furthest from the boiler;
– check that the boiler is firing at maximum burner pressure;
– adjust the D.H.W. flowrate by turning the restrictor screw on the divertor valve until a D.H.W. temperature rise of approx 35°C is achieved. This corresponds to the flowrates shown in table 4;
– turn off the tap;
– remove the pressure gauge and refit the sealing screw;
– relight and test for gas soundness.

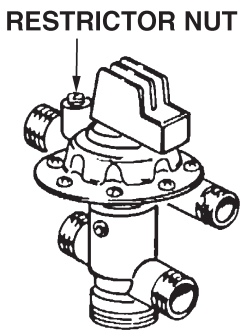

Fig. 18

4.5 FINAL CHECKS

– Re-fit the casing in reverse order.
– Set the C.H. and D.H.W. potentiometers to the required settings.
– Ensure that the clock override switch (1 fig. 24) is in the CLOCK position "◷", and check that the time clock is set at the desired time periods. Set the room thermostat (if fitted) to the required setting.

4.6 USER'S INSTRUCTIONS

Upon completion of commissioning and testing the system, the installer should:
– Give the "Users Instructions" to the householder and emphasise their responsibilities under the "Gas Safety (Installation and Use) Regulations 1984".
– Explain and demonstrate the lighting and shutdown procedures.
– Advise the householder on the efficient use of the system, including the use and adjustment of all system controls for both D.H.W. and C.H.
– Advise the user of the precautions necessary to prevent damage to the system, and to the building, in the event of the system remaining inoperative during frost conditions.
– Explain the function of the boiler overheat thermostat, and how to reset it. Emphasise that if cut-out persists, the boiler should be turned off and the installer or service engineer consulted.
– Stress the importance of an annual service by a competent heating engineer.

5 ROUTINE SERVICING INSTRUCTIONS

To ensure continued efficient operation of the appliance, it is recommended that it is checked and serviced as necessary at regular intervals. The frequency of servicing will depend upon the particular installation conditions and usage but in general once a year should be adequate.
It is the law that any service work must be carried out by a competent person such as British Gas or other CORGI registered personnel. Before commencing any service operation, ISOLATE the mains electrical supply, and TURN OFF the gas supply at the main service cock. Service the appliance by following the full procedure detailed below.

5.1 MAIN BURNER ASSEMBLY

– Remove the front casing panel by unscrewing the retaining screws and brackets situated above the front panel, and pulling the panel forwards from the top corners whilst holding the side panels in place.
– Remove both casing side panels by unscrewing the three screws in each situated underneath and above the side panel, and lift the panels vertically upwards to release them (fig. 8).
– Release the two spring clips and remove the four fixing screws securing the sealed chamber front panel then remove the panel (fig. 19).

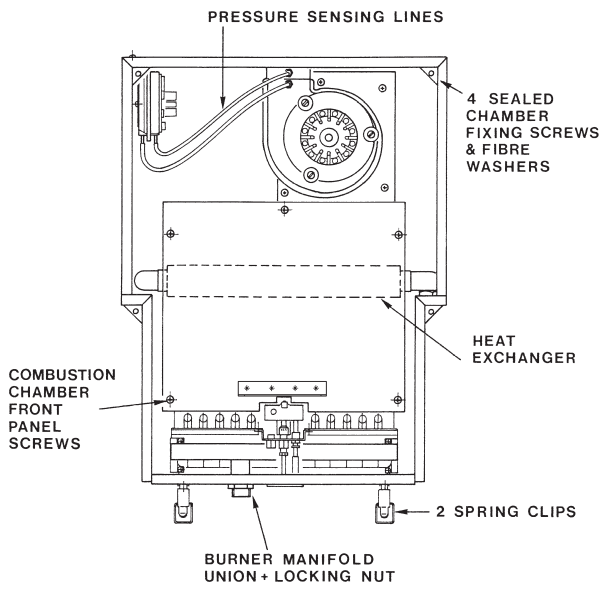

Fig. 19

– Unscrew the 5 screws securing the combustion chamber front panel and remove the panel, taking care not to damage the insulation.
– Unscrew the pilot pipe from the pilot burner and withdraw. Carefully remove the pilot injector. It may be necessary to remove the pilot bracket to do this.
– In the **"FRIENDLY"** model unscrew the thermocouple and spark electrode connections and remove from pilot bracket. Unscrew the two screws holding the pilot bracket and lift clear.
– Unscrew the burner manifold union.
– Remove the burner assembly locking nut.
– Lift the front of the burner to disengage manifold thread and then lift the burner clear.
– Remove the burner manifold by disconnecting the four screws (9 fig. 24).
– Inspect and if necessary, clean the injectors.
– Inspect and if necessary, clean the main burner bars.

5.2 PILOT ASSEMBLY

– Inspect the pilot injector; clean if necessary.
– Inspect and clean (if necessary) the pilot burner. Ensure that it is free from debris.
– Re-assemble the burner assembly in reverse order ensuring that the baffle is correctly re-positioned. Do not reassemble any other components until the service is completed.

5.3 FAN ASSEMBLY

– Disconnect the electrical connections to the fan. Note the position of the earth conductor.
– Pull off the two pressure sensing lines.
– Remove the four screws securing the fan mounting plate.
– Tilt the fan assembly forwards and remove in a downwards direction.
– Inspect the fan assembly and clean if necessary.

5.4 HEAT EXCHANGER

– Remove the anti-vibration spring on the top of the collector hood (fig. 20).
– Lift the collector hood assembly, tilt forwards and remove the hood.
– Inspect the heat exchanger, and clean if necessary.

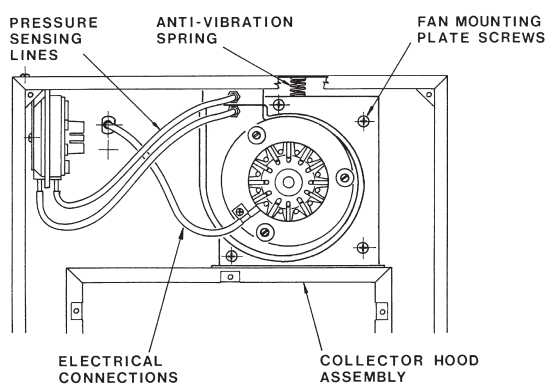

Fig. 20

5.5 RE-ASSEMBLY

– Re-assemble all the components in reverse order and replace all the gaskets fitted onto the gas line. Check

the gas soundness before fitting the outer case.
Ensure that all seals are correctly fitted and that the pressure sensing lines are correctly fitted as shown in figs. 21 and 22. Ensure that the earth connection is correctly refitted. Note that the polarity (Line and Neutral) is immaterial.

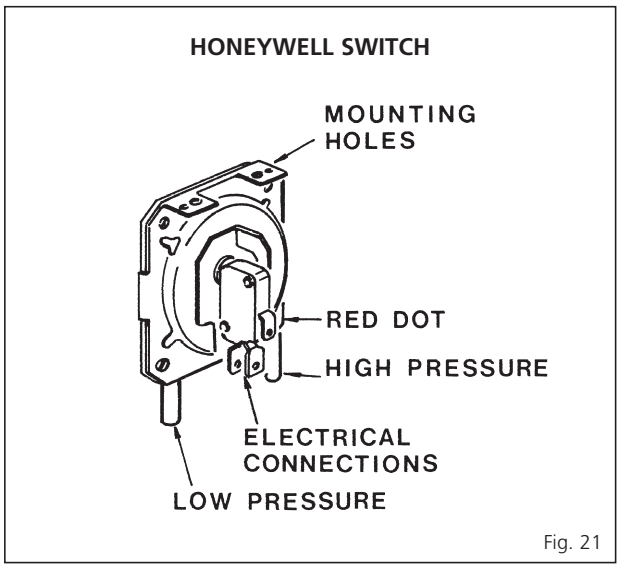

Fig. 21

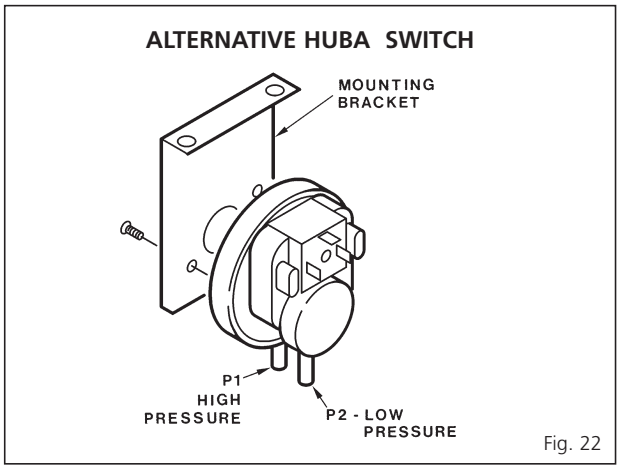

Fig. 22

5.6 RE-COMMISSIONING

– Turn on the gas supply, and check for gas soundness whilst the appliance is running.
– Check the operation of the appliance in both C.H. and D.H.W. mode and ensure in both cases that the burner pressure after at least 2 minutes running is as stated on the data plate or in section 1.3.
  Adjust if necessary as described in section 4.

6 FAULT FINDING

If an electrical fault occurs on the appliance the preliminary electrical system checks contained in the British Gas Multimeter Instruction Booklet must be carried out first. When any service or replacement of electrical components which has required the breaking and re-making of electrical connections has taken place, the following tests must be repeated:
– earth continuity;
– short circuit;
– polarity;
– resistance to earth.

6.1 EARTH CONTINUITY CHECK

Appliances must be electrically disconnected, meter set on Ω (ohm) x 1 scale and adjust zero if necessary. Tests leads from any appliance earth point (e.g. inside control box) see wiring diagrams (section 7) to earth pin on plug. Resistance should be less than 1 Ω (ohm). If the resistance is greater than 1 Ω (ohm) check all earth wires for continuity and all contacts are clean and tight. If the resistance to earth is still greater than 1 Ω (ohm) then this should be reported to your supervisor.

6.2 SHORT CIRCUIT CHECK

Switches turned FULL ON - meter set on Ω (ohms) x 1 scale.
Test leads from L to N on appliance terminal block, if meter reads 0 then there is a short circuit.
Meter set on Ω (ohm) x 100 scale. Repeat it with leads from L to E. If meter reads less than infinity (∞) there is a fault.

NOTE: Should it be found that the fuse has failed but no fault is indicated, a detailed continuity check (i.e. by disconnecting and checking each component) is required to trace the faulty component.
It is possible that a fault could occur as a result of local burning/arcing but no fault could be found under test. However, a detailed visual inspection should reveal evidence of burning around the fault.

6.3 POLARITY CHECK

Appliance reconnected to mains supply and meter set on 300 V ac scale. Test at appliance terminal block.
– Test leads from L to N meter reads approx.: 240 V ac.
– Test leads from L to E " ⏚ " meter reads approx. 240 V ac.
– Test leads from N to E " ⏚ " meter reads from 0 to 15 V ac.

6.4 RESISTANCE TO EARTH CHECK

Appliance must be disconnected from main supply and meter on Ω (ohm) x 100 scale.

All switches including thermostat on test leads from L to E - if meter reads other than infinity (∞) there is a fault which should be isolated. A detailed continuity check is required to trace the faulty component.

IMPORTANT: These series of checks are the first electrical checks to be carried out during a fault finding procedure. On completion of the service / fault finding task which has required the breaking and remaking of electrical connections then the checks 6.1 Earth continuity, 6.3 Polarity and 6.4 Resistance to earth must be repeated.

6.5 FAULT FINDING - PILOT ("FRIENDLY" model)

Room thermostat open, no D.H.W. request and all D.H.W. taps off.

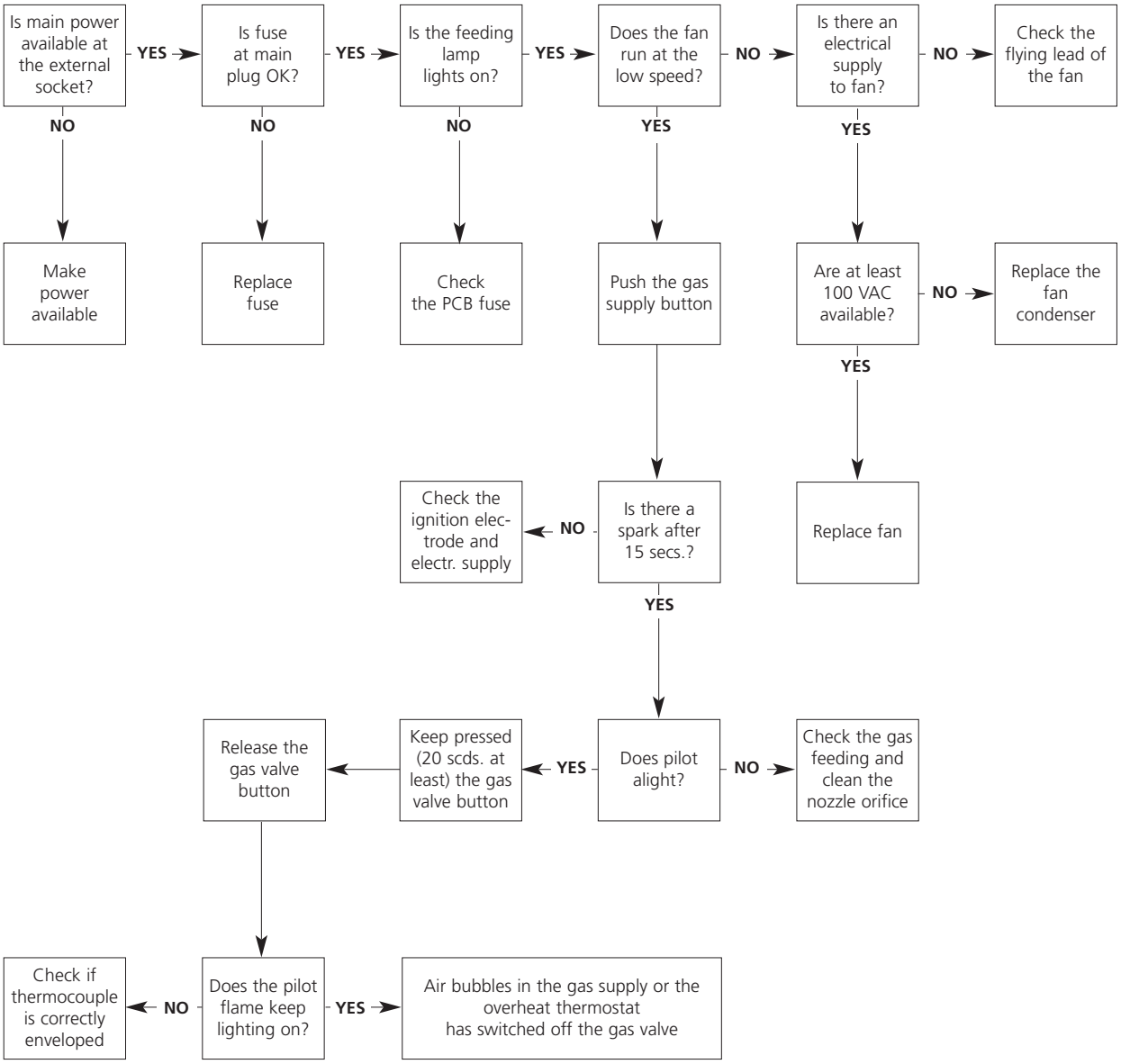

6.6 C.H. MODE - FAULT FINDING ("FRIENDLY" model)

Start from cold: Summer/Winter switch set to WINTER position; room thermostat (if fitted) calling for heat and all D.H.W. taps off; C.H. thermostat set to maximum position; clock override switch in the on position.

After completing fault finding. Reset the room thermostat (if fitted) to the required setting and turn the clock override switch to the clock position. If the appliance will not function on "clock" setting. Check the wiring to the clock and if necessary, replace the clock.

6.7 D.H.W. MODE - FAULT FINDING ("FRIENDLY" model)

Start from cold - Summer / Winter switch set to SUMMER position, D.H.W. thermostat set to maximum, and all D.H.W. taps OFF.

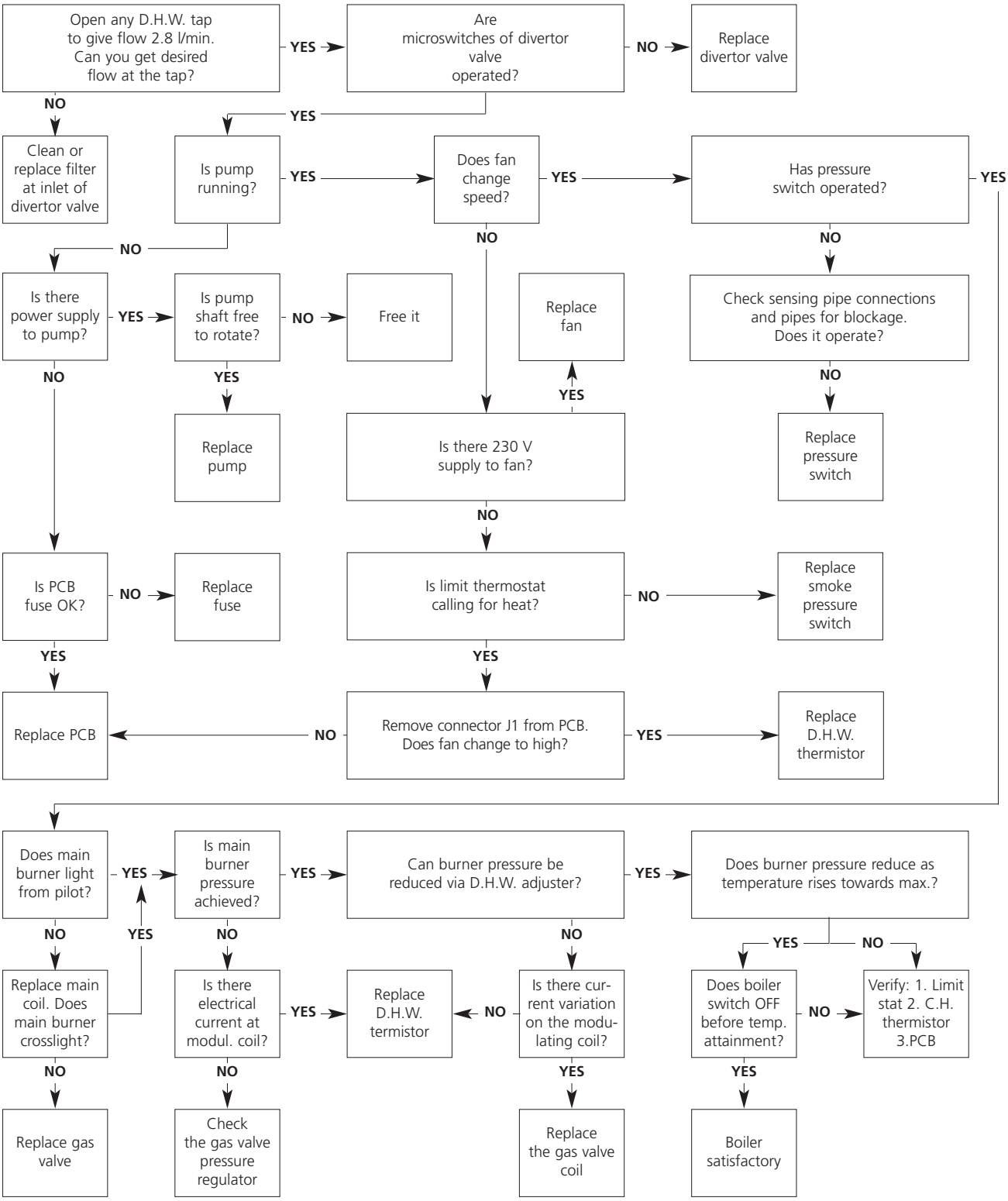

6.8 C.H. MODE - FAULT FINDING ("FRIENDLY E" model)

Start from cold Summer/Winter switch set to WINTER position.
Room thermostat (if fitted) calling for heat and all D.H.W. taps off.
C.H. thermostat set to maximum position.
Clock override switch in the on position.

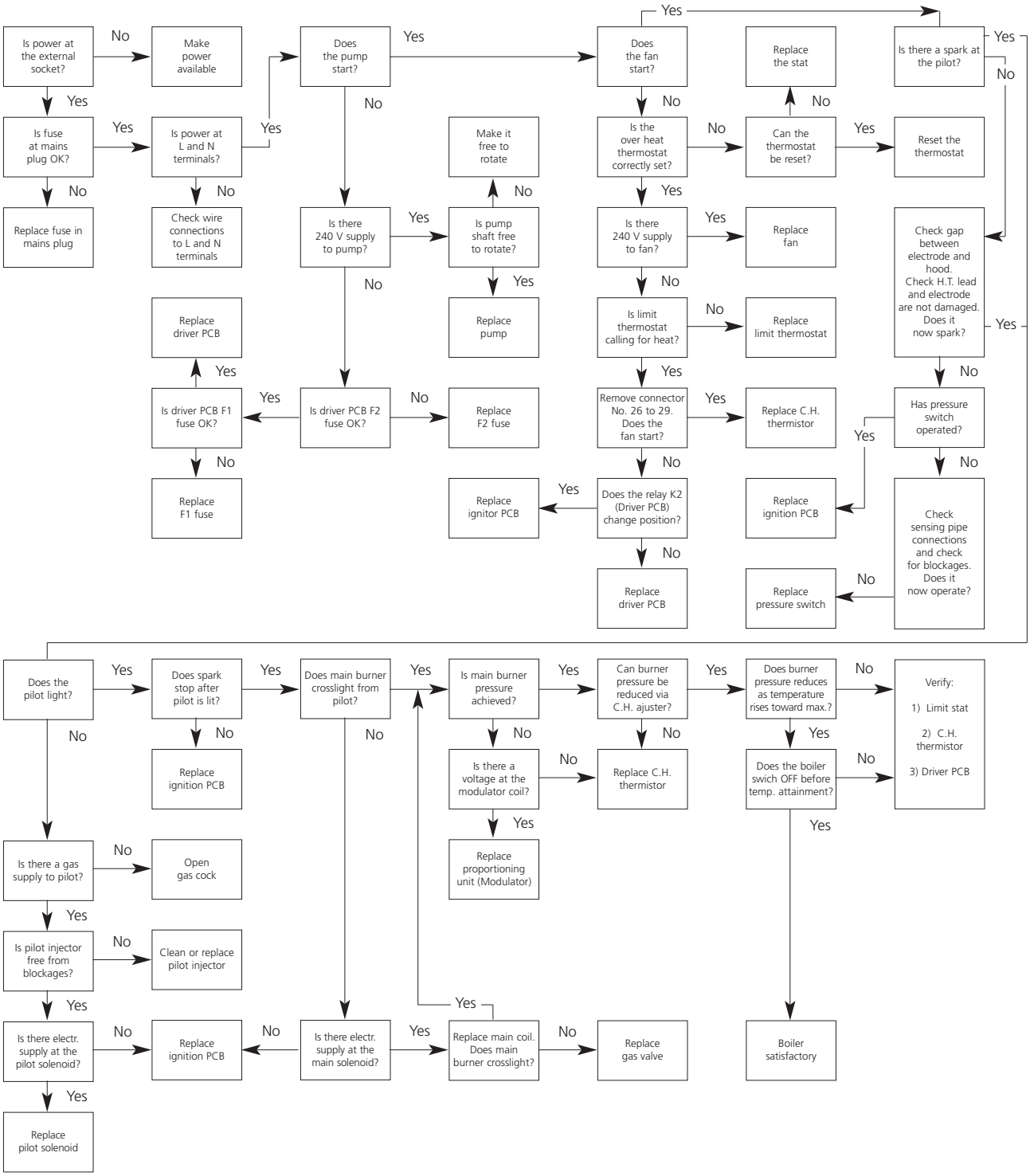

NOTE:
After completing fault finding reset the room thermostat (if fitted) to the required setting and turn the clock override switch to the clock position. If the appliance will not function on "clock" setting check the wiring to the clock and if necessary, replace the clock.

6.9 D.H.W. MODE - FAULT FINDING (“FRIENDLY E” model)

Start from cold - Summer/Winter switch set to SUMMER position, D.H.W. thermostat set to maximum, and all D.H.W. taps OFF.

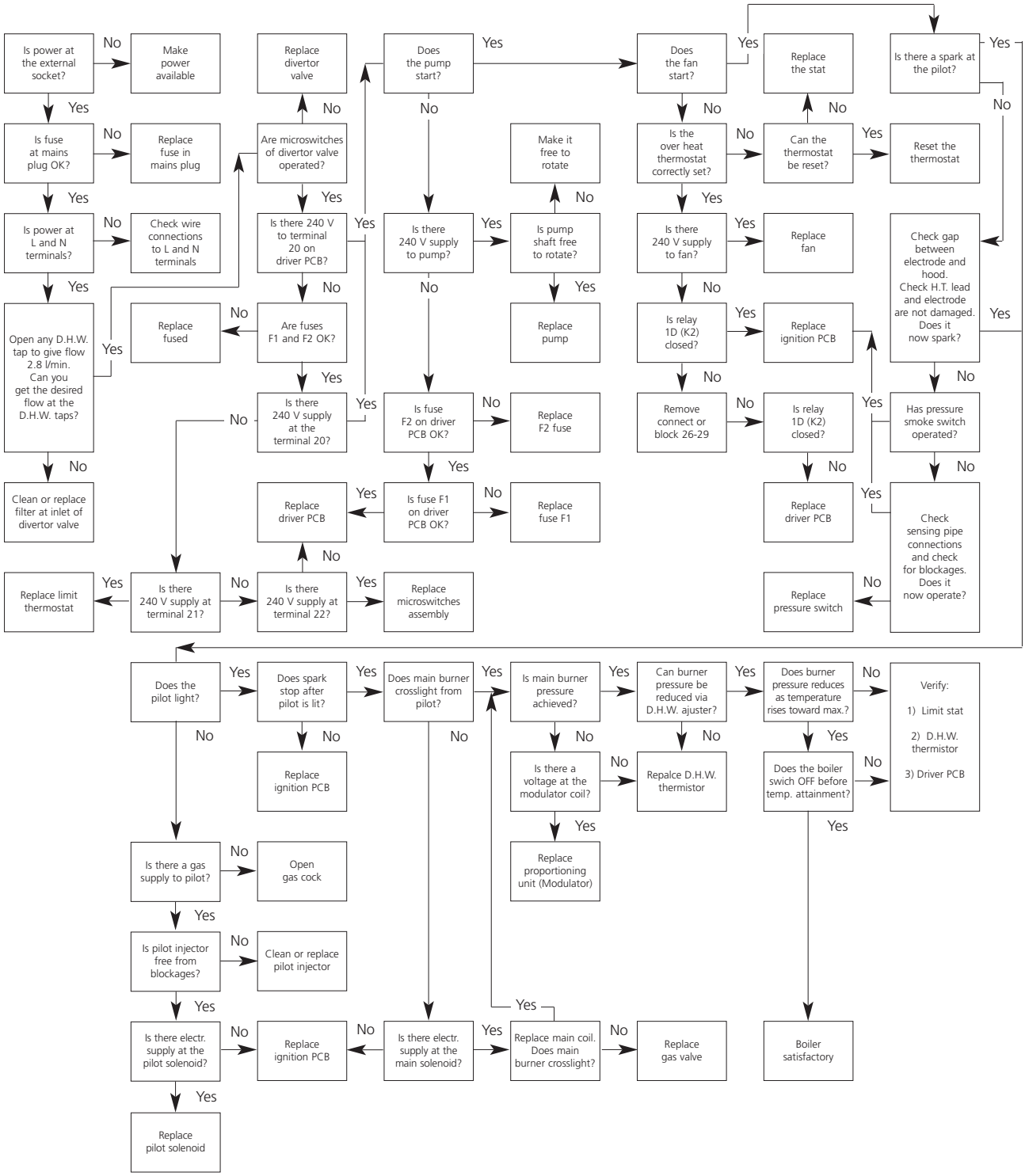

NOTE:
When commissioning the boiler, please check the polarity in case the pump and the fan are running but the burner does not fire.

7 INTERNAL WIRING DIAGRAMS AND VIEWS

7.1 FUNCTIONAL FLOW WIRING DIAGRAM “FRIENDLY” MODEL

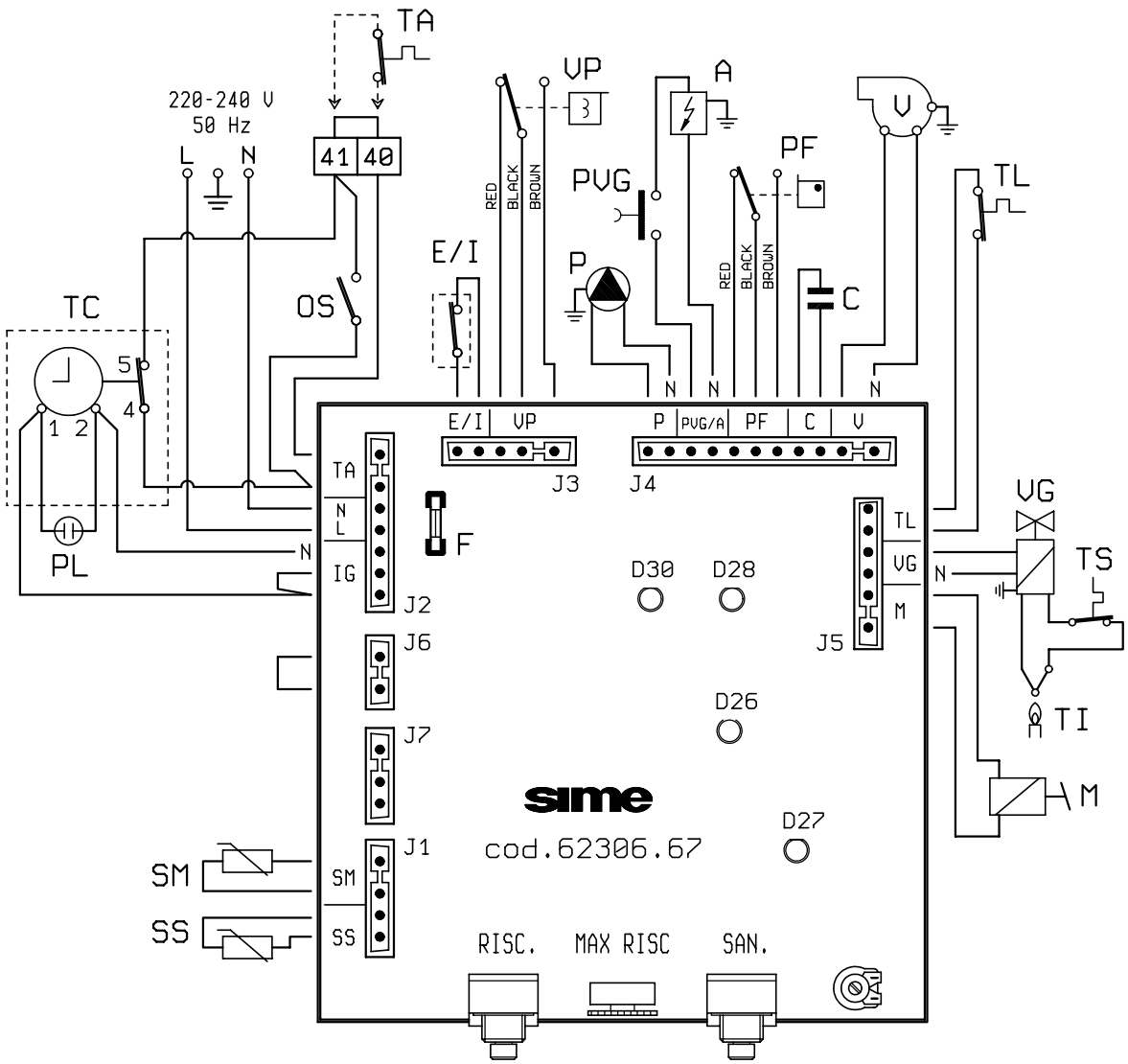

KEY

L	Phase	A	Delayed ignition
N	Neutral	PF	Smoke pressure switch
SS	D.H.W. temperature sensor (red)	C	Fan capacitor
SM	Outlet C.H. temperature sensor (blue)	V	Fan
TC	Time clock	TL	Limit stat 85°C
PL	Power-on lamp	VG	Gas valve
OS	Time clock overriding switch	TS	H.L. stat 100°C
F	Fuse (T 1.6 A)	TI	Interrupted thermocouple
TA	Room stat	M	Modulating coil
E/I	Summer/Winter switch	D30	Smoke pressure switch led
VP	Diverter valve	D28	Line led
P	Circulating pump	D26	Interrupted C.H. thermistor
PVG	Gas control push-button	D27	Ignition led

Fig. 23/a

7.2 FUNCTIONAL FLOW WIRING DIAGRAM "FRIENDLY E" MODEL

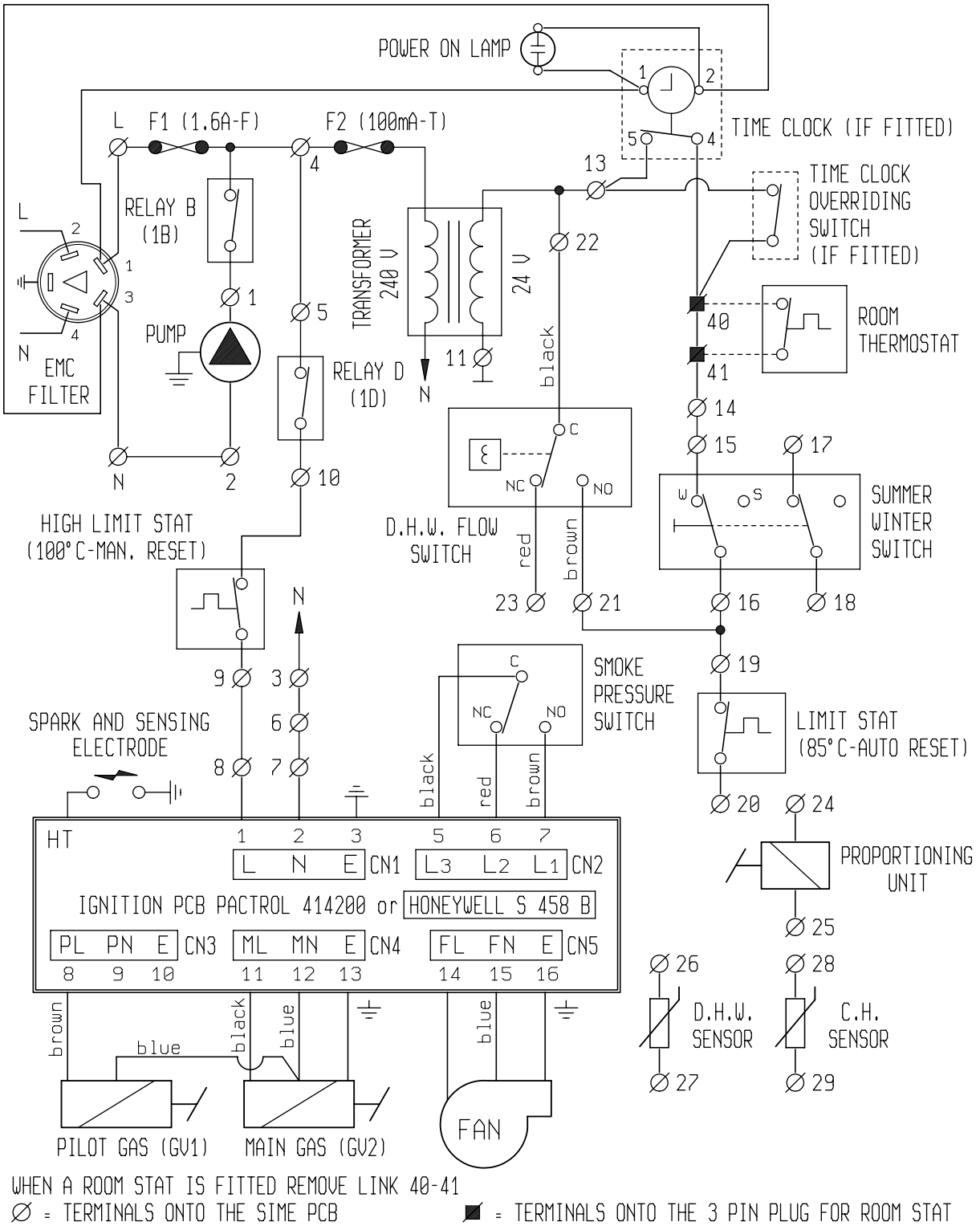

Fig. 23/b

7.3 INTERNAL VIEW “FRIENDLY” MODEL

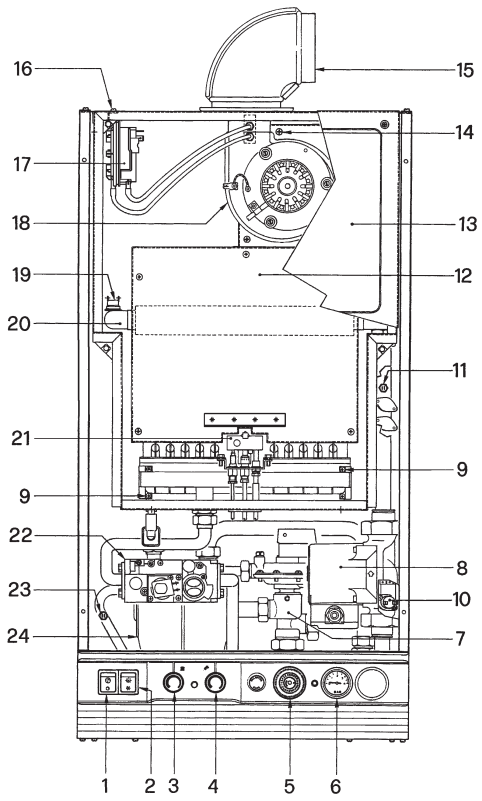

KEY
1 Clock override switch
2 Summer/Winter switch
3 C.H. potentiometer
4 D.H.W. potentiometer
5 Clock
6 Pressure gauge
7 Divertor valve
8 Circulating pump
9 Burner manifold screws
10 Overheat thermostat
11 C.H. thermistor
12 Combustion chamber
13 Sealed chamber
14 Fan mounting plate screws
15 Air/flue elbow
16 Pressure switch bracket screws
17 Pressure switch
18 Fan
19 Limit thermostat
20 Heat exchanger
21 Pilot assembly
22 Gas valve
23 D.H.W. thermistor
24 D.H.W. heat exchanger

Fig. 24/a

7.4 INTERNAL VIEW “FRIENDLY E” MODEL

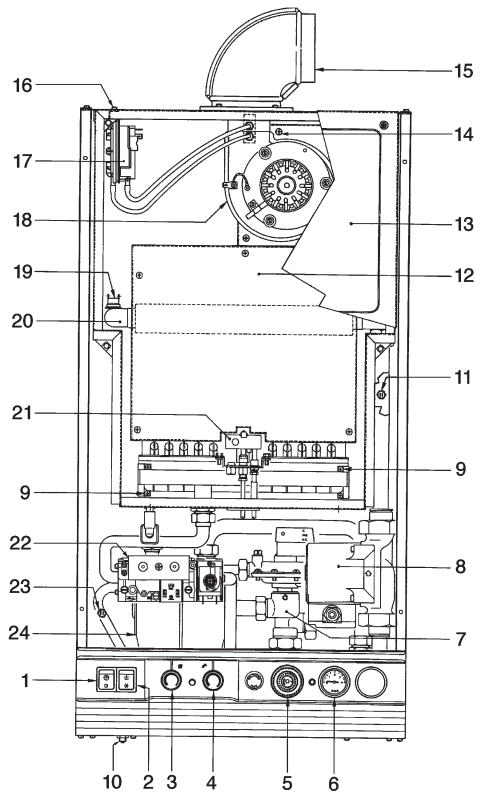

KEY
1 Clock override switch
2 Summer/Winter switch
3 C.H. potentiometer
4 D.H.W. potentiometer
5 Clock
6 Pressure gauge
7 Divertor valve
8 Circulating pump
9 Burner manifold screws
10 Overheat thermostat
11 C.H. thermistor
12 Combustion chamber
13 Sealed chamber
14 Fan mounting plate screws
15 Air/flue elbow
16 Pressure switch bracket screws
17 Pressure switch
18 Fan
19 Limit thermostat
20 Heat exchanger
21 Pilot assembly
22 Gas valve
23 D.H.W. thermistor
24 D.H.W. heat exchanger

Fig. 24/b

8 REPLACEMENT OF PARTS

Before commencing any service operation, ISOLATE the mains electrical supply, and TURN OFF the gas supply at the main service cock.
It is the law that any service work must be carried out by a competent person such as British gas or other Corgi registered personnel.

8.1 HEAT EXCHANGER

- Remove the fan as described in section 8.3.
- Remove the anti-vibration spring on the top of the collector hood (fig. 20).
- Lift the collector hood assembly, tilt forwards, and remove the hood.
- Isolate the C.H. flow and return valves.
- Drain the heat exchanger using the drain cock (fig. 2).
- Unscrew the two heat exchanger unions and the locking nuts, then lift out the heat exchanger.
- Re-assemble in reverse order, ensuring that the pressure sensing pipes and anti vibration spring are correctly refitted (figs. 20 - 21 - 22). The fan polarity is not important except the earth conductor (G/Y which is marked on the appliance). Refill, and re-commission the system as described in section 4.

8.2 COMBUSTION CHAMBER INSULATION

The design of this appliance is such that the rear and side insulation should not require replacement unless mechanically damaged. To replace the insulation front panel, proceed as follows:
- remove the combustion chamber front panel as described in section 5.1;
- replace the front insulation panel and glue it into position on the front panel using the glue supplied. Reassemble in reverse order.

Should the rear or side panels become damaged, replace them as follows.
- remove the heat exchanger as described in section 8.1;
- remove the side insulation panels followed by the rear panel;
- re-assemble in reverse order, refill, and recommission the system as described in section 4.

8.3 FAN ASSEMBLY

- Remove the outer casing and the sealed chamber front panel as described in section 5.1.
- Disconnect the electrical connections to the fan. Note the position of the earth conductor.
- Pull off the two pressure sensing lines (fig. 20).
- Unscrew the four screws securing the fan mounting plate.
- Drop and tilt the fan assembly forwards and remove in a downwards direction.
- Unscrew the three screws retaining the fan on the fan plate (14 fig. 24). Remove the fan assembly.
- Transfer the pressure sensing Venturi from the old fan to the new one, ensuring that it is fitted in the correct direction as shown in fig. 25.
- Transfer the fan outlet seal onto the new fan.
- Reassemble in reverse order. Ensure that the earth connection is correctly refitted. Note that the polarity (Line and Neutral) is immaterial. Ensure that the pressure sensing leads are correctly connected - red dot to red dot and plain to plain.

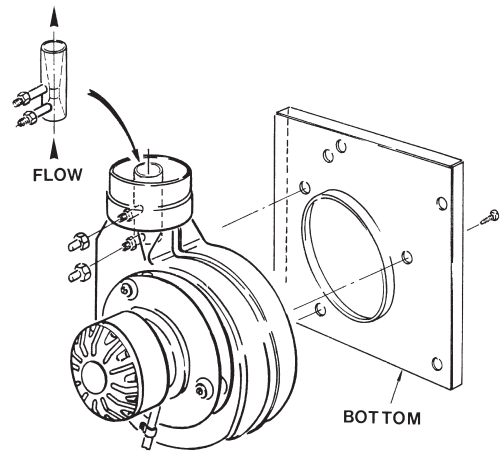

Fig. 25

8.4 MAIN BURNER

- Remove the main burner by following section 5.1.
- Transfer the pilot assembly onto the new burner assembly.
- Re-assemble in reverse order and check for gas soundness.

8.5 PILOT BURNER ASSEMBLY AND ELECTRODE

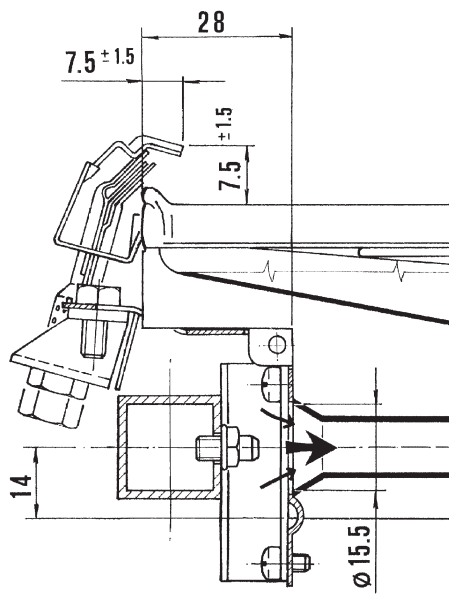

Fig. 26

"FRIENDLY" model
- Remove the combustion chamber front panel as described in section 5.1.
- Unscrew the pilot pipe from the pilot burner and withdraw. Carefully remove the pilot injector.
- Unscrew the thermocouple and spark electrode connections and remove from pilot bracket. Unscrew the two screws holding the pilot bracket and lift clear.

– To replace electrode remove the control box cover, pull off connection from the spark generator and work the lead through the plastic grommet in the base of the combustion chamber.
– Replace and reassemble in reverse order.

"FRIENDLY E" model
– Remove the combustion chamber front panel as described in section 5.1.
– Unscrew electrode. TO REPLACE ELECTRODE ONLY. Replace electrode, and go to last step.
– Remove the old pilot burner and replace with the new one. Check that the critical dimensions are as shown in fig 26.
– Re-assemble in reverse order and check for gas soundness.

8.6 GAS VALVE

8.6.1 V4600C mounted on "FRIENDLY" model

– Remove the outer casing as described in section 5.1.
– Disconnect the electrical connections to the gas valve by removing grey cover (take out one screw), pulling wires from connectors and disconnecting earth. Remove plug from modulator coil by taking out screw and pulling clear.
– Unscrew the pilot pipe connector at the L.H.S. of valve. Unscrew thermocouple from rear of valve. Take off microswitch by removing screw.
– Unscrew the burner manifold union.
– Unscrew the four posi-head screws securing the gas valve inlet pipe, and remove the gas valve complete with the outlet pipe.
– Transfer the outlet pipe onto the new gas valve, using a new gasket (supplied with the valve).
– Fit the new gas valve assembly into the appliance using the other new gasket supplied on the valve inlet, and re-assemble in reverse order.
– Relight the appliance, check for gas soundness, and recommission in accordance with section 4. In addition it will be necessary to set the D.H.W. and C.H. heat inputs, as follows (fig. 27).
  Disconnect one of the electrical connections to the coil (5). Undo nut (2) and remove screw (3). Turn the D.H.W. temperature adjuster (3 fig. 17) clockwise to maximum and open the D.H.W. taps.
  Undo nut (1) and turn stud (4) clockwise to increase the pressure, and anti-clockwise to decrease the pressure, until the correct pressure is reached.
  Tighten nut (1) keeping stud (4) from moving using a screwdriver. Check the burner pressure is stable. Close the D.H.W. taps.
  Set Summer/Winter switch to WINTER. Using a screwdriver turn trimmer (2 fig. 17) fully anti-clockwise to maximum. Turn the C.H. temperature adjuster (1 fig. 17) clockwise to maximum. Adjust the minimum pressure by turning the minimum rate adjustment screw (3) clockwise to increase the pressure, and anti-clockwise to decrease the pressure, until the correct pressure is reached. Tighten locking nut (2) without rotating screw (3). Check the burner pressure is stable. Turn the trimmer clockwise to set the pressure for the required output. Remove pressure gauge and tighten burner pressure test nipple. Check for gas soundness with leak detector fluid.
– Continue as in section 4.3 to 4.5.

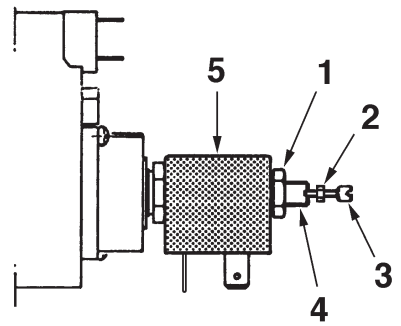

KEY
1 Locking nut M7
2 Locking nut M2
3 Adjustement screw for minimum pressure setting
4 Adjustement stud for maximum pressure setting
5 Modulating coil with 6.3 mm AMP terminals

Fig. 27

8.6.2 SIT 837 TANDEM mounted on "FRIENDLY E" model

– Remove the outer casing as described in section 5.1.
– Disconnect the electrical connections to the gas valve.
– Unscrew the pilot pipe connector.
– Unscrew the burner manifold union.
– Unscrew the four posi-head screws securing the gas valve inlet pipe, and remove the gas valve complete with the outlet pipe.
– Transfer the outlet pipe onto the new gas valve, using a new gasket (supplied with the valve).
– Fit the new gas valve assembly into the appliance using the other new gasket supplied on the valve inlet, and re-assemble in reverse order.
– Relight the appliance, check for gas soundness, and recommission in accordance with section 4.
  In addition it will be necessary to set the D.H.W. and C.H. heat inputs, as follows:
  – remove the sealing cap of the proportioning unit (C fig. 28) by rotating it/turn anticlockwise;
  – using a 10 mm spanner, turn nut (B fig. 28) to attain 11.1 mbar (4.4 inwg) of pressure. Turn the nut clockwise to increase the pressure or anti-clockwise to decrease it;
  – check that the maximum pressure is correctly set by turning on and off the D.H.W. inlet valve several times and ensuring that the pressure returns to that previously adjusted;
  – isolate the mains electricity supply and disconnect (pull off) the two 24 V modulation leads. Restore the mains supply. The appliance will light on minimum input only;
  – set the minimum pressure of 1.5 mbar by holding nut (B fig. 28) in position with a 10 mm spanner and rotating the plastic screw (A fig. 28) with a screwdriver until the correct pressure is obtained.
    Turn the screw clockwise to increase the pressure or anti-clockwise to decrease it. It is essential that the max pressure has been set prior to adjusting the minimum pressure. Check that the minimum pressure is correctly set by turning on and off the D.H.W. inlet valve several times and ensuring that the pressure returns to that previously adjusted;

– isolate the mains electricity supply and reconnect (push on) the two 24 V modulation leads (polarity is immaterial). Restore the mains supply. The appliance will light on maximum input. Check that the burner pressure corresponds to the values given in the previous points;
– refit the proportioning unit sealing cap (C fig 28);
– reduce the D.H.W. draw off rate to the minimum necessary to maintain the burner alight by carefully adjusting the D.H.W. Inlet valve and check that the burner pressure decreases in response to D.H.W. temperature rise. Fully open the inlet valve;
– close the D.H.W. tap and ensure that the burner is extinguished and the pump stops.

– Continue as in section 4.3 to 4.5.

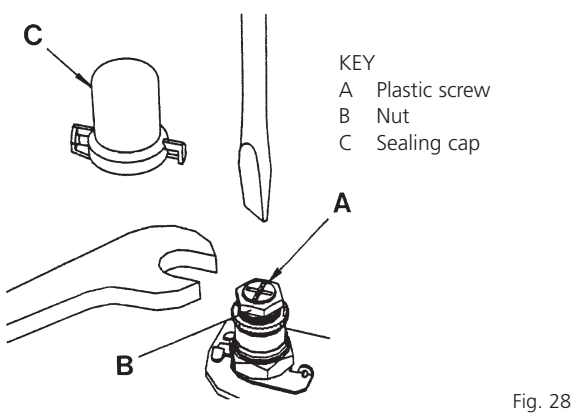

Fig. 28

8.7 PRESSURE SWITCH

Two types of pressure switch are available on this appliance, HONEYWELL or HUBA. Both are fully interchangeable, and figs. 21 - 22 shows the differences between them. Note that the HUBA switch has a bracket not required by the HONEYWELL switch.

– Remove the outer casing and the sealed chamber front panel as described in section 5.1.
– Disconnect the pressure sensing pipes from the switch (fig. 20).
– Disconnect the electrical connections from the switch.
– Unscrew and remove the two screws securing the mounting bracket (HUBA) or switch body (HONEYWELL).
– (HUBA only) Remove the switch from the bracket (two screws) and fit the new one.
– Fit the new switch and re-assemble in reverse order referring to figs. 21 - 22 and the wiring diagrams (section 7) as appropriate.

8.8 LIMIT THERMOSTAT

The limit thermostat is situated on the top, L.H.S. of the heat exchanger (19 fig. 24).
– Remove the outer casing and the sealed chamber front panel as described in section 5.1.
– Without disconnecting the wires, unscrew the two limit thermostat fixing screws.
– Lift the thermostat and fixing screws out using the wires.
– Replace the thermostat and spread heat sink compound (supplied) over the base of the new one.
Connect the wires, (polarity is immaterial) and position the screws in the flange and re-fit using the wires to position the thermostat before tightening the screws.
– Re-assemble in reverse order.

8.9 THERMOCOUPLE AND OVERHEAT THERMOSTAT FOR “FRIENDLY” MODEL

– Remove the combustion chamber front panel as described in section 5.1.
– Loosen thermocouple retaining nut at pilot burner and pull out thermocouple.
Work thermocouple through plastic grommet at the base of combustion chamber.
– Remove the two screws retaining overheat thermostat (10 fig. 24).
– Unscrew thermocouple from rear of gas valve.
– Replace and reassemble in reverse order.

8.10 OVERHEAT THERMOSTAT FOR “FRIENDLY E” MODEL

The bulb of the overheat thermostat (10 fig. 24) is positioned in a phial pocket alongside the air separator in the flow pipe.
– Remove the outer casing as described in section 5.1.
– From below the boiler, unscrew and remove the overheat thermostat locking nut to release the thermostat body.
– Remove the two screws TCB M4 x 10 (2 fig.14) and pivot the control box downwards, then remove the two self tapping screws (1 fig. 14) and remove the control box cover.
– Withdraw the thermostat then pull off the two electrical connections
– Remove the lower “key ring” securing the thermostat phial in its pocket and remove the phial by sliding it downwards. Withdraw the phial through the grommet in the control box.
– Re-assemble in reverse order ensuring that the new phial is coated in heat sink compound (supplied) and correctly positioned and secured in it’s pocket. Note that the electrical polarity is immaterial.

8.11 THERMISTOR - C.H. OR D.H.W.

The thermistors are screwed in fittings on the flow pipe (C.H.) and D.H.W. outlet pipe (D.H.W.).
The thermistors do not penetrate the waterways, therefore it is not necessary to drain the appliance (fig. 24).
– Remove the outer casing as described in section 5.1.
– Pull off both electrical connections from the faulty thermistor, unscrew the thermistor, replace and re-assemble in reverse order using the heat sink compound supplied. Note that the polarity of the thermistor connections is immaterial.

The sensors are NTC mod. ST03 ones and are interchangeable.
Table 9 shows the resistance values that are obtained on the sensors as the temperature varies.

TABLE 9

Temperature (°C)	Resistance (Ω)
20	12,000
30	8,300
35	6,900
40	5,800
45	4,900
50	4,100
55	3,500
60	3,000
70	2,200
80	1,700

8.12 SPARK GENERATOR FOR "FRIENDLY" MODEL

- Pull off four leads noting their position. If in doubt consult the wiring diagram.
- Remove two screws holding generator to control panel side wall.
- Replace and reassemble in reverse order.

8.13 IGNITION PCB FOR "FRIENDLY E" MODEL

- Remove the outer casing as described in section 5.1.
- Remove the two screws TCB M4 x 10 (2 fig. 14) and pivot the control box downwards, then remove the two self tapping screws (1 fig. 14) and remove the control box cover.
- Pull off the four connector blocks and the H.T. lead from the ignition PCB. (The R.H.S. - smaller - PCB), then release the PCB from it's mountings.
- Replace the PCB and reassemble in reverse order.

8.14 DRIVER PCB

- Remove the outer casing as described in section 5.1.
- Remove the two screws TCB M4 x 10 (2 fig. 14) and pivot the control box downwards, then remove the two self tapping screws (1 fig. 14) and remove the control box cover.
- Pull off the connector blocks from the driver PCB (The L.H.S. - larger - PCB for **"FRIENDLY E"** model).
- Pull off the potentiometer control knobs (1 - 3 fig. 17), and unscrew the locking nuts.
  Release the PCB from it's mountings by rotating the mounting pins ⁄turn anticlockwise, and lift it out of the control box taking care not to lose the potentiometer spacers.
- Replace the PCB and reassemble in reverse order. Do not forget to re-fit the spacers.

8.15 PUMP

- Remove the outer casing as described in section 5.1.
- Isolate the C.H. flow and return valves (21 fig. 2), and drain the appliance through the drain plug situated below the pump
- Swivel the pump and remove the plastic pump cover (1 screw); disconnect the electrical connections to the pump.
- Support the pump to prevent it from rotating, and unscrew both union connections.
- Replace the pump, and reassemble in reverse order, using the new gaskets supplied with the pump. If the new pump is fitted with a speed adjuster, ensure that the speed is set to maximum.
- Refill and commission the system as described in section 4.1.

8.16 D.H.W. HEAT EXCHANGER

- Remove the outer casing as described in section 5.1.
- Isolate the C.H. flow and return valves, and the D.H.W. isolation valve (21 - 20 fig. 2).
- Drain the appliance through the drain plug situated below the pump and the drain point at the bottom of the D.H.W. heat exchanger.
- Drain the D.H.W. circuit by opening any D.H.W. tap below the level of the boiler.
- Remove the two screws TCB M4 x 10 (2 fig. 14) and pivot the control box downwards.
- Disconnect all union connections to the D.H.W. heat exchanger and remove the heat exchanger.
- Fit new heat exchanger and reassemble in reverse order using the new gaskets supplied with the heat exchanger. Refill and re-commission the system as described in section 4.1.

8.17 DIVERTOR VALVE - COMPLETE

- Remove the outer casing as described in section 5.1.
- Isolate the C.H. flow and return valves, and the D.H.W. isolation valve (21 - 20 fig. 2).
- Drain the appliance through the drain plug situated below the pump outlet and the drain point at the bottom of the D.H.W. heat exchanger. Rotate the pump to the R.H.S. to improve access to the divertor valve.
- Drain the D.H.W. circuit by opening any D.H.W. tap below the level of the boiler.
- Remove the two screws TCB M4 x 10 (2 fig. 14) and pivot the control box downwards.
- Disconnect all union connections from the divertor valve. Withdraw the valve and remove the electrical connections.
- Transfer the electrical connections onto the new valve. Refer to the wiring diagrams in section 7.
- Re-assemble in reverse order, using the new gaskets supplied with the valve.
  Refill and re-commission the system as described in section 4.1.

8.18 DIVERTOR VALVE - MICROSWITCH ASSEMBLY

- Remove the outer casing as described in section 5.1.
- Rotate the pump to improve access to the divertor valve.
- Pull out the microswitch circlip, (fig. 18) and lift off the microswitch assembly.
- Transfer the electrical connections onto the new microswitch assembly.
  Refer to the wiring diagrams in section 7.
- Re-assemble in reverse order.

8.19 C.H. EXPANSION VESSEL

In the unlikely event of failure of the expansion vessel diaphragm it is acceptable to leave the vessel in position and to fit a replacement vessel (of similar or greater capacity) external to the appliance but as close as possible to the C.H. return. Alternatively the vessel can be replaced as follows. Note replacement is not recommended if a rear flue outlet is used or if the clearance above the casing is less than 300 mm.

- Remove the outer casing as described in section 5.1.
- Isolate the C.H. flow and return valves (21 fig. 2), and drain the appliance through the drain plug situated below the pump
- Unscrew the expansion vessel pipe union at it's connection with the D.H.W. heat exchanger.
- Remove the screw securing the expansion vessel bracket at the top, rear of the appliance.
- If a rear flue outlet is used it is necessary to disengage the flue and air duct temporarily. Refer to section 3.5.
- Remove the adjusting screws (5 fig. 7) on the wall mounting bracket thereby allowing the appliance to move slightly forwards at the top.
- Lift the expansion vessel, bracket, and pipe out of the appliance through the top.
- Transfer the bracket and pipe to the new expansion vessel, and re-assemble in reverse order. Re-pressurise and re-commission the system as described in section 4.1.

8.20 SUMMER/WINTER SWITCH AND CLOCK OVER-RIDE SWITCH

- Remove the outer casing as described in section 5.1.
- Remove the two screws TCB M4 x 10 (2 fig. 14) and pivot the control box downwards, then remove the two self tapping screws (1 fig. 14) and remove the control box cover.
- Squeeze the switch to depress the retaining clips, then withdraw the switch forwards.
- Pull off the connections to the switch.
- Fit the new switch and reassemble in reverse order, with reference to the wiring diagrams in section 7.

8.21 PRESSURE GAUGE

- Remove the outer casing as described in section 5.1.
- Remove the two screws TCB M4 x 10 (2 fig. 14) and pivot the control box downwards.
- Isolate the C.H. flow and return valves (21 fig. 2).
- Drain the appliance through the drain point situated below the pump.
- Unscrew the pressure sensor from the top of the safety valve.
- Squeeze the gauge to depress the retaining clips, then ease the gauge forwards.
- Reassemble in reverse order. Refil and recommission the system as described in section 4.1

8.22 SAFETY VALVE

- Remove the outer casing as described in section 5.1.
- Remove the two screws TCB M4 x 10 (2 fig. 14) and pivot the control box downwards.
- Isolate the C.H. flow and return valves (21 fig. 2).
- Drain the appliance through the drain point situated below the pump.
- Unscrew the pressure sensor from the top of the safety valve.
- Unscrew the union supporting the outlet pipe from the valve, and remove the valve by unscrewing it from the main pipe connection.
- Fit the new safety valve using a suitable jointing compound and reassemble in reverse order. Refil and recommission the system as described in section 4.1

8.23 AUTOMATIC AIR VENT

- Remove the outer casing front panel as described in section 5.1.
- Refer to fig. 8.
  Remove the casing R.H. side panel by unscrewing the two fixing screws.
- Isolate the C.H. flow and return valves (21 fig. 2).
- Drain the appliance through the drain point situated below the pump.
- Unscrew the automatic air vent.
- Fit the new automatic air vent using a suitable jointing compound and reassemble in reverse order. Refil and recommission the system as described in section 4.1.

8.24 VIEWING WINDOW

- Remove the outer casing and sealed chamber front panel as described in section 5.1.
- Unscrew the three screws and nuts securing the viewing window.
- Replace the viewing window and gaskets, and reassemble in reverse order.

8.25 TIME CLOCK

- Remove the outer casing as described in section 5.1.
- Remove the two screws TCB M4 x 10 (2 fig. 14) and pivot the control box downwards, then remove the two self tapping screws (1 fig. 14) and remove the control box cover.
- Pull off the electrical connections at the back of the clock.
- Remove the four screws securing the plastic frame of the time clock to the facia panel.
- Remove the plastic frame and pull out the time clock.
- Re-assemble in reverse order and test the operation of the new clock.
  Set it to the desired settings.

9 SHORT LIST OF PARTS

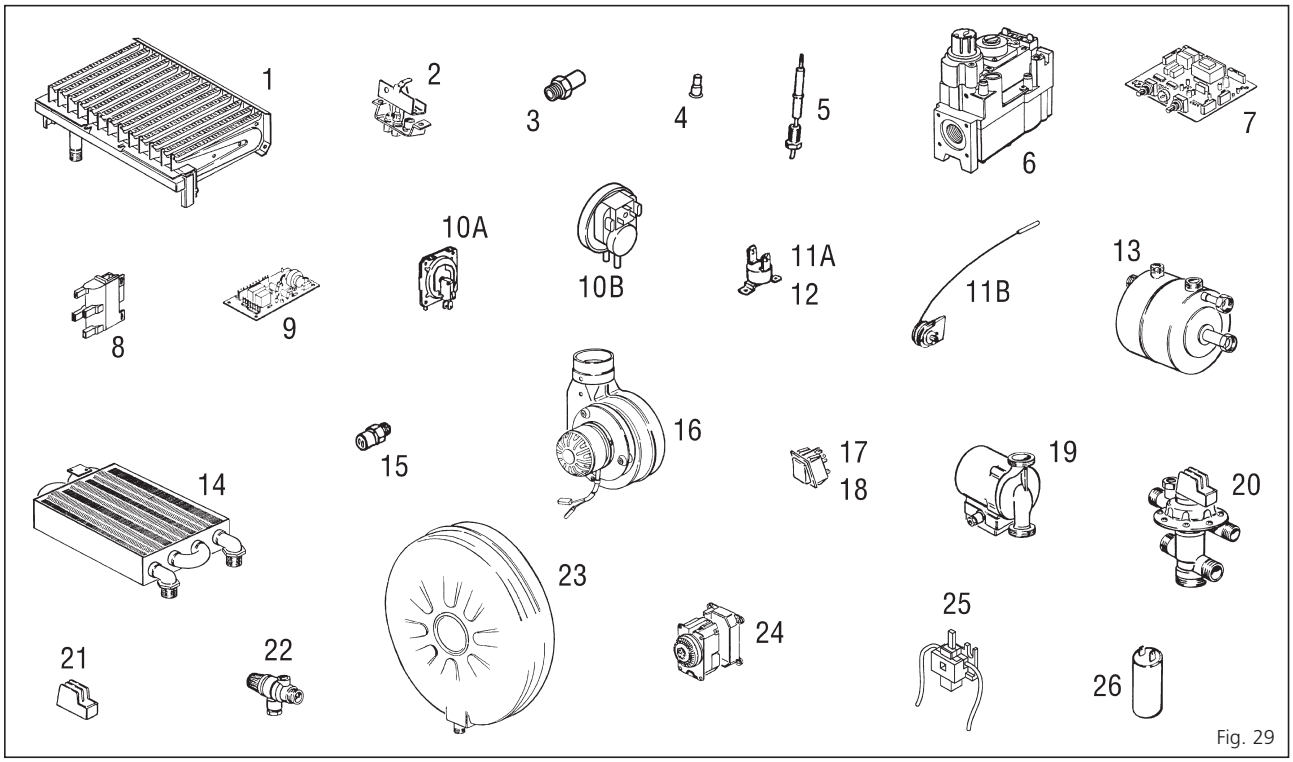

Fig. 29

KEY	G.C. PART NO	DESCRIPTION	NO OFF	MAKER'S PT NO
1	309 328	Main burner POLIDORO	1	51727.00
2		Pilot burner POLIDORO PA 646 F/G 29 (**"FRIENDLY"**)	1	62231.01
2	379 588	Pilot burner POLIDORO PA 646 F/G 29 (**"FRIENDLY E"**)	1	62231.03
3	397 950	Main injector NP 130	13	61544.02
4	397 949	Pilot injector POLIDORO G29	1	60661.02
5		Electrode SAPCO or CAST (**"FRIENDLY"**)	1	60230.01
5	309 329	Electrode SAPCO or CAST (**"FRIENDLY E"**)	1	60230.02
6		HONEYWELL gas valve V4600C 1128 B (**"FRIENDLY"**)	1	60897.00
6		SIT gas valve 0.837.025 (**"FRIENDLY E"**)	1	62438.03
7		Driver PCB SIME (**"FRIENDLY"**)	1	62306.67
7	309 330	Driver PCB SIME (**"FRIENDLY E"**)	1	62306.70
8		Delayed ignition (**"FRIENDLY"**)	1	62253.00
9	397 586	Igniter PCB PACTROL 414200 ISSO1 (**"FRIENDLY E"**)	1	62306.05
9	397 595	Igniter PCB HONEYWELL S458B 1002 (alternative **"FRIENDLY E"**)	1	A62306.05
9		Igniter PCB PEKTRON (alternative **"FRIENDLY E"**)	1	B62306.05
10 a	386 115	Air pressure switch HONEYWELL C6065 F	1	62257.02
10 b	397 596	Air pressure switch HUBA 605.99.157 (alternative)	1	A62257.02
11 a		Overheat thermostat (**"FRIENDLY"**)	1	51815.02
11 b	379 086	Overheat thermostat FIRT STB 901 (**"FRIENDLY E"**)	1	A61732.00
11 b	397 597	Overheat thermostat RANCO LM7 P5041 (alternative **"FRIENDLY E"**)	1	61732.00
12	397 590	Limit thermostat ELMWOOD 52455R L0851342AEAB A	1	61467.00
13	309 322	D.H.W. heat exchanger GIANNONI PB 24 - 32	1	62228.00
14	309 331	Heat exchanger GIANNONI PR 20323041	1	62476.00
15		C.H./D.H.W. thermistor	1	62313.50
16	397 585	Fan assembly SIFAN FFB 1711-001	1	62256.03
16	397 592	Fan assembly SALMSON E 15 - 19 DR (alternative)	1	A62256.03
17		Clock overriding switch	1	60135.03
18		Summer/Winter switch SIGNAL LUX 8226341886	1	60134.01
19		Pump MYSON CP 51	1	62546.01
20	397 951	Divertor valve GIANNONI V35/1M/1D/4A	1	61028.02
21	397 952	Divertor valve microswitch HONEYWELL	1	61507.00
22	397 677	Safety valve CALEFFI 3141	1	60422.01
23	397 584	C.H. expansion vessel ZILMET 7 l	1	51391.00
24		Time clock DIEHL FLASH 883 S	1	61977.03
25		Gas valve microswitch HONEYWELL (**"FRIENDLY"**)	1	62255.00
26		Condenser 1.75 µF (**"FRIENDLY"**)	1	62299.07

Combination Boilers

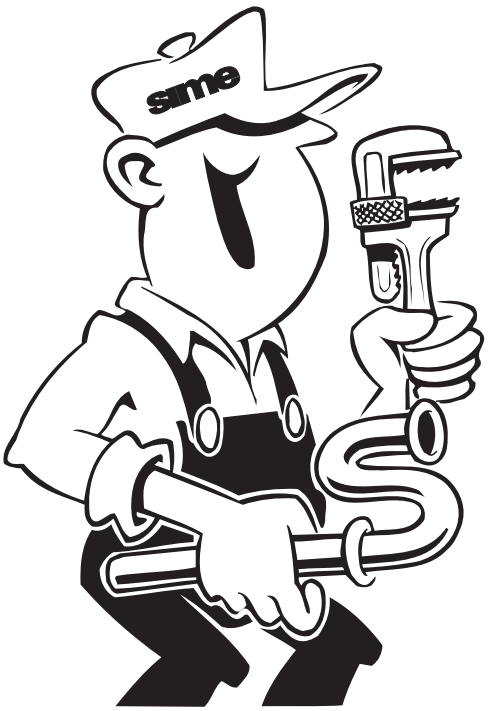

sime

THE FAMILY RANGE OF COMBINATION BOILERS

Join us at our training centre for installation and technical courses on our range of boilers.

We provide free of charge:
installation, fault finding and in-depth technical training courses.

FREE LUNCH

Certificate on completion of the course.

Please fill in the form below for more details.

Name: . . . . . .

Address: . . . . . .

. . . . . .

. . . . . .

Postcode: . . . . . **Tel No.** . . . . . .

Company: . . . . . .

Please hand this slip to your local merchant, or return it to:

SIME HEATING products UK ltd
Jubilee Works - Middlecroft Road
Staveley - Chesterfield - Derbyshire S 43 3XN
Tel. 01246/471950 - Fax 01246/281822

Cod. 623323 0A

sime heating products u.k.ltd.

Jubilee Works - Middlecroft Road - Staveley - Chesterfield - Derbyshire S 43 3XN
Tel. 01246/471950 - Fax 01246/281822

For service enquiries and boiler faults contact our service company on:
Tel. 01246/470777 - Fax 01246/470094