spares & parts online
IBASIS.co.uk©

ENSURE THAT THESE INSTRUCTIONS ARE LEFT FOR THE USER AFTER COMPLETION OF THE BENCHMARK SECTION

Super Mk.II

Installation and servicing instructions

GAS safe REGISTER
199838

benchmark COLLECTIVE MARK
THE MARK OF QUALITY FOR THE INSTALLATION, COMMISSIONING AND SERVICING OF DOMESTIC HEATING AND HOT WATER SYSTEMS

Please read the Important Notice within this guide regarding your boiler warranty

sime®

IMPORTANT NOTICE

For the first year all of our appliances are protected by our manufacturer's guarantee which covers both parts and labour.
As you would expect from Sime Ltd, it is our aim to provide our valued customers with the best in after sales and service.
To take advantage of any extended warranty offered, all you have to do is to adhere to these 3 simple conditions:

- The installation must be carried out to Manufacturers/Benchmark Standards by a Gas Safe Registered Engineer, and recorded in the installation manual.

- The appliance must be registered with both Sime Ltd and Gas Safe within 30 days of installation.

- The appliance must be serviced annually, by either Sime Ltd or a Gas Safe registered engineer- ensuring that the Benchmark service record in the installation manual is completed.

Failure to comply with the above will result in only the 12 month warranty being offered.
In the absence of any proof of purchase, the 12 month warranty period will commence from the date of manufacture of the boiler as shown on the appliance data plate.

All descriptions and illustrations provided in this manual have been carefully prepared but we reserve the right to make changes and improvements in our products that may affect the accuracy of the information contained in this manual.

Code Of Practice

For the installation, commissioning and servicing of domestic heating and hot water products

Benchmark places responsibilities on both manufacturers and installers.* The purpose is to ensure that customers** are provided with the correct equipment for their needs, that it is installed, commissioned and serviced in accordance with the manufacturer's instructions by competent persons and that it meets the requirements of the appropriate Building Regulations. Installers are required to carry out work in accordance with the following:

Standards of Work

- Be competent and qualified to undertake the work required.
- Install, commission, service and use products in accordance with the manufacturer's instructions provided.
- Ensure that where there is responsibility for design work, the installation is correctly sized and fit for purpose.
- Meet the requirements of the appropriate Building Regulations. Where this involves notifiable work be a member of a Competent Persons Scheme or confirm that the customer has notified Local Authority Building Control (LABC), prior to work commencing.
- Complete all relevant sections of the Benchmark Checklist/Service Record when carrying out commissioning or servicing of a product or system.
- Ensure that the product or system is left in a safe condition and, whenever possible, in good working order.
- Highlight to the customer any remedial or improvement work identified during the course of commissioning or servicing work.
- Refer to the manufacturer's helpline where assistance is needed.
- Report product faults and concerns to the manufacturer in a timely manner.

Customer Service

- Show the customer any identity card that is relevant to the work being carried out prior to commencement or on request.
- Give a full and clear explanation/demonstration of the product or system and its operation to the customer.
- Hand over the manufacturer's instructions, including the Benchmark Checklist, to the customer on completion of an installation.
- Obtain the customer's signature, on the Benchmark Checklist, to confirm satisfactory demonstration and receipt of manufacturer's instructions.
- Advise the customer that regular product servicing is needed, in line with manufacturers' recommendations, to ensure that safety and efficiency is maintained.
- Respond promptly to calls from a customer following completion of work, providing advice and assistance by phone and, if necessary, visiting the customer.
- Rectify any installation problems at no cost to the customer during the installer's guarantee period.

benchmark COLLECTIVE MARK
THE MARK OF QUALITY FOR THE INSTALLATION, COMMISSIONING AND SERVICING OF DOMESTIC HEATING AND HOT WATER SYSTEMS

*The use of the word "installer" is not limited to installation itself and covers those carrying out installation, commissioning and/or servicing of heating and hot water products, or the use of supporting products (such as water treatment or test equipment).
**Customer includes householders, landlords and tenants.

© Heating and Hotwater Industry Council (HHIC)

The Benchmark Scheme

Sime Ltd is a licensed member of the Benchmark Scheme which aims to improve the standards of installation and commissioning of domestic heating and hot water systems in the UK and to encourage regular servicing to optimise safety, efficiency and performance.

Benchmark is managed and promoted by the Heating and Hotwater Industry Council.
For more information visit www.centralheating.co.uk

Super 90 Mk.II:

Gas Council number 47-719-14

Super 105 Mk.II:

Gas Council number 47-719-15

Please refer to commissioning instructions for filling in the checklist of this installation guide.

Note: All Gas Safe registered installers carry a ID Card.
You can check your installer is Gas Safe Registered by calling 0800 408 5577

SIME COMBINATION BOILERS
Installer checklist

Please remember to carry out the following checks after installation. This will achieve complete customer satisfaction, and avoid unnecessary service calls. A charge will be made for a service visit where the fault is not due to a manufacturing defect.

- Has a correct by-pass been fitted and adjusted?
- Has the system and boiler been flushed?
- Is the system and boiler full of water, and the correct pressure showing on the pressure gauge?
- Is the Auto Air Vent open?
- Has the pump been rotated manually?
- Is the gas supply working pressure correct?
- Is the boiler wired correctly? (See installation manual).
- Has the D.H.W. flow rate been set to the customer requirements?
- Has the customer been fully advised on the correct use of the boiler, system and controls?
- Has the log book provided been completed?

CONTENTS

1 TECHNICAL FEATURES AND DIMENSIONS

1.1 INTRODUCTION 8
1.2 DIMENSIONAL DETAILS
1.3 GENERAL DATA 9
1.4 HYDRAULIC CIRCUIT 10

2 GENERAL REQUIREMENTS FOR INSTALLATION

2.1 STATUTORY REQUIREMENTS 11
2.2 BOILER POSITION
2.3 FLUE TERMINAL POSITION
2.4 VENTILATION REQUIREMENTS 12
2.5 GAS SUPPLY
2.6 ELECTRICITY SUPPLY
2.7 EXTERNAL CONTROLS
2.8 WATER SYSTEMS - GENERAL
2.9 REQUIREMENTS FOR SEALED WATER SYSTEMS
2.10 D.H.W. SYSTEMS 14

3 INSTALLING THE BOILER

3.1 UNPACKING THE BOILER 15
3.2 FIXING THE BOILER MOUNTING FRAME
3.3 WATER CONNECTIONS 16
3.4 HANGING THE BOILER
3.5 FLUE AND TERMINAL PREPARATION
3.6 FLUE AND TERMINAL INSTALLATION 17
3.7 SEPARATE DUCTS 18
3.8 GAS CONNECTIONS 20
3.9 SAFETY VALVE CONNECTION
3.10 WIRING INSTRUCTIONS
3.11 TIME-CLOCK INSTRUCTIONS 21

4 COMMISSIONING AND TESTING (including BENCHMARK)

4.1 FILLING THE WATER SYSTEM 21
4.2 COMMISSIONING THE BOILER
4.3 SETTING THE C.H. INPUT 22
4.4 SETTING THE D.H.W. FLOWRATE
4.5 FINAL CHECKS
4.6 USER'S INSTRUCTIONS

5 ROUTINE SERVICING INSTRUCTIONS

5.1 MAIN BURNER ASSEMBLY 26
5.2 FAN ASSEMBLY

5.3 HEAT EXCHANGER 27
5.4 RE-ASSEMBLY 27
5.5 RE-COMMISSIONING

6 FAULT FINDING

6.1 EARTH CONTINUITY CHECK 27
6.2 SHORT CIRCUIT CHECK
6.3 POLARITY CHECK
6.4 RESISTANCE TO EARTH CHECK
6.5 C.H. MODE - FAULT FINDING 28
6.6 D.H.W. MODE - FAULT FINDING 29

7 INTERNAL WIRING DIAGRAMS AND VIEWS

7.1 FUNCTIONAL FLOW WIRING DIAGRAM 30
7.2 INTERNAL VIEW 31

8 REPLACEMENT OF PARTS

8.1 HEAT EXCHANGER 32
8.2 COMBUSTION CHAMBER INSULATION
8.3 FAN ASSEMBLY
8.4 MAIN BURNER
8.5 IGNITION/DETECTION ELECTRODES
8.6 GAS VALVE 33
8.7 AIR PRESSURE SWITCH
8.8 LIMIT THERMOSTAT
8.9 OVERHEAT THERMOSTAT
8.10 THERMISTOR 34
8.11 IGNITION CONTROL BOX
8.12 DRIVER PCB
8.13 PUMP
8.14 D.H.W. HEAT EXCHANGER
8.15 DIVERTOR VALVE - COMPLETE
8.16 DIVERTOR VALVE - MICROSWITCH ASSEMBLY
8.17 C.H. EXPANSION VESSEL
8.18 PRESSURE GAUGE 35
8.19 SAFETY VALVE
8.20 AUTOMATIC AIR VENT
8.21 TIME CLOCK

9 EXPLODED VIEWS

9.1 DIVERTOR VALVE 35
9.2 HYDRAULIC CIRCUIT 36
9.3 COMBUSTION CIRCUIT 37
9.4 STRUCTURAL COMPONENTS AND CONTROL & REGULATION 38

1 TECHNICAL FEATURES AND DIMENSIONS

1.1 INTRODUCTION

The Sime **"Super Mk.II"** are wall mounted, fan assisted balanced flue combination boilers.
The appliance is supplied suitable for use with natural gas, (an L.P.G. model is available) and provide central heating and instantaneous production of D.H.W. Heat output is varied according to demand by the modulating gas control on both D.H.W. and C.H.
The appliance is supplied with a concentric air and flue duct suitable for wall thicknesses up to 740 mm (29 in) although extension duct kits are available and may be used up to a total flue length of 3.0 m (118 in).
The combined flue and air duct can exit the boiler from either side or from the rear of the appliance.
A vertical extension and additional flue elbow may be fitted. If required, the boilers can also be fitted with a separate flues kit (see section 3 for details).
The boiler is designed for use with sealed primary water systems and is supplied fully assembled and equipped with complete valve packs.
If the wall thickness is less than 0.5 m (19 in) the appliance can be installed from inside the room without access to the external wall although a wall liner is required.
This is available as an optional extra, and full details are given in section 3.
The boiler can be used with a 240V room thermostat (class II according to EN 60730.1).

1.2 DIMENSIONAL DETAILS

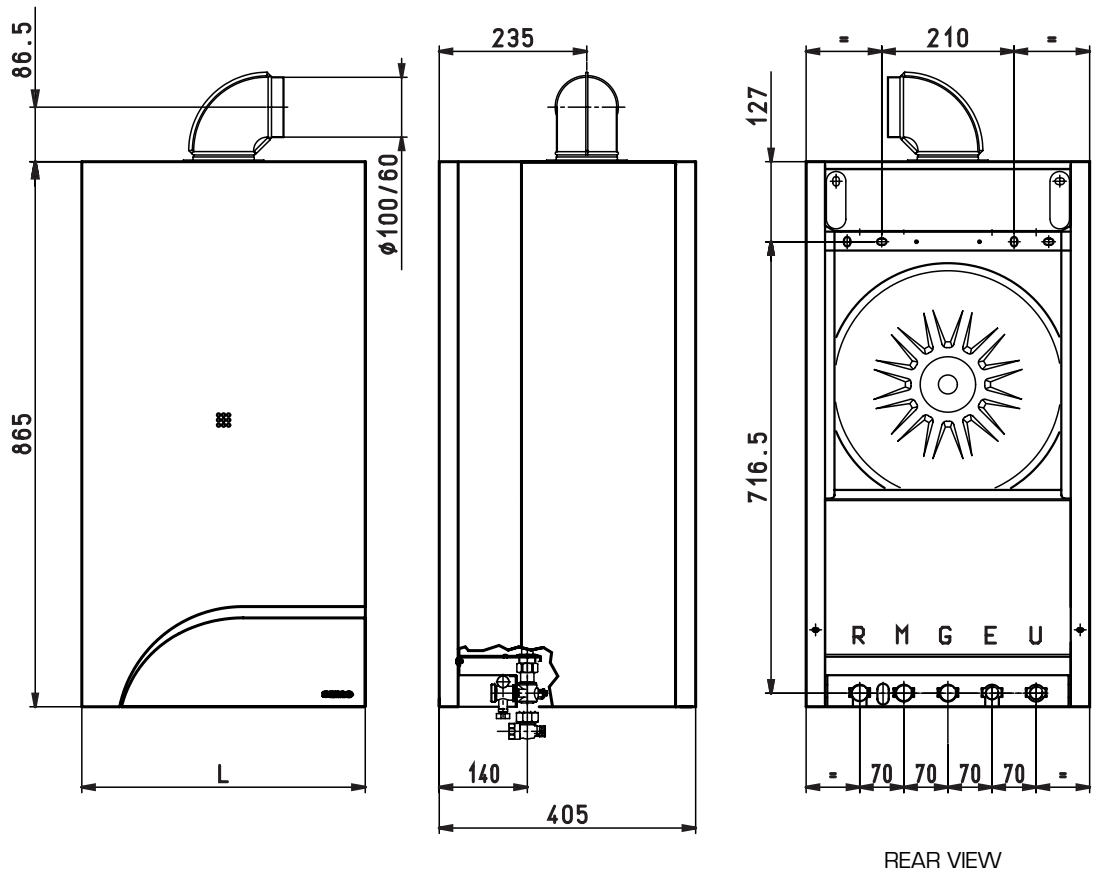

	90 Mk.II	105 Mk.II
L mm	450	500

Fig. 1

TABLE 1 - Connections

R	**C.H. return**	22 mm	Compression
M	**C.H. flow**	22 mm	Compression
G	**Gas connection**	1/2 in	Bsp
E	**Cold water**	15 mm	Compression
U	**Hot water**	15 mm	Compression

TABLE 2 - Minimum clearances

ABOVE THE APPLIANCE CASING	200	mm	8	in
AT THE R.H.S.	5	mm	1/4	in
AT THE L.H.S.	5	mm	1/4	in
BELOW THE APPLIANCE CASING	200	mm	8	in
IN FRONT OF THE APPLIANCE	450	mm	18	in

1.3 GENERAL DATA

TABLE 3a - Nominal boiler ratings (5 minutes after lighting) for "Super 90 Mk.II"

MODE		OUTPUT		INPUT (G.C.V.)		BURNER PRESSURE*	
		kW	Btu/h	kW	Btu/h	mbar	inwg
CENTRAL HEATING RANGE		10.5	35,700	13.5	46,200	2.4	1.0
		12.5	42,600	15.9	54,200	3.8	1.5
		14.5	49,500	18.2	62,200	5.1	2.0
		16.5	56,400	20.6	70,200	6.4	2.6
		18.5	63,300	22.9	78,200	7.7	3.1
	X**	20.6	70,200	25.3	86,200	9.0	3.6
		22.6	77,100	27.6	94,200	10.3	4.1
		24.6	84,000	29.9	102,200	11.6	4.6
		26.6	90,900	32.3	110,200	12.6	5.1
DOMESTIC HOT WATER	Max.	26.6	90,900	32.3	110,200	12.6	5.1
	Min.	10.5	35,700	13.5	46,200	2.4	1.0

*Differential measure between downstream pressure in the gas valve and depression in sealed chamber **Factory setting

TABLE 3b - Nominal boiler ratings (5 minutes after lighting) for "Super 105 Mk.II"

MODE		OUTPUT		INPUT (G.C.V.)		BURNER PRESSURE*	
		kW	Btu/h	kW	Btu/h	mbar	inwg
CENTRAL HEATING RANGE		11.5	39,250	15.0	51,150	2.2	0.9
		13.9	47,400	17.7	60,400	3.0	1.2
		16.2	55,300	20.4	69,600	4.0	1.6
		18.6	63,500	23.1	78,800	5.1	2.0
		21.0	71,600	25.9	88,400	6.4	2.6
	X**	23.4	79,800	28.6	97,500	7.8	3.1
		25.7	87,700	31.3	106,800	9.3	3.7
		28.0	95,500	34.0	116,000	11.0	4.1
		30.5	104,050	36.8	125,550	12.6	5.1
DOMESTIC HOT WATER	Max.	30.5	104,050	36.8	125,550	12.6	5.1
	Min.	11.5	39,250	15.0	51,150	2.2	0.9

*Differential measure between downstream pressure in the gas valve and depression in sealed chamber **Factory setting

TABLE 4 - General specifications

				90 Mk.II		105 Mk.II	
Main burner injectors	No off			13		15	
	Dia	mm		1.3		1.3	
Water capacity	l	(gal)		3.4	(0.85)	3.4	(0.85)
Minimum water flow	D.H.W.	l/min	(gal/min)	2	(0.5)	2	(0.5)
D.H.W. flow rate							
at a temperature rise of	30°C	l/min	(gal/min)	12.7	(2.8)	14.6	(3.2)
	35°C	l/min	(gal/min)	10.9	(2.4)	12.5	(2.7)
Static head	Minimum	bar	(psi)	0.5	(7.3)	0.5	(7.3)
	Maximum	bar	(psi)	3.0	(43.5)	3.0	(43.5)
D.H.W. pressure	Minimum	bar	(psi)	0.5	(7.3)	0.5	(7.3)
	Maximum	bar	(psi)	7.0	(102)	7.0	(102)
Weight	Empty	kg	(lb)	43	(95)	49	(108)
	Total (full)	kg	(lb)	46.5	(102)	52.5	(116)
Electrical supply					230 V - 50 Hz, Fused at 3 A		
Internal fuses					Line: F 1.6 A - P.C.B.: T 100 mA		
Maximum power consumption		Watt		155		160	
Maximum gas consumpt. (G20)		m^3/h	(ft^3/h)	2.72	(96)	3.50	(123.7)
Max. working temperature		°C	(F)	95	(203)	95	(203)
Integral expansion vessel capacity		l	(gal)	7	(1.5)	10	(2.2)

1.4 HYDRAULIC CIRCUIT

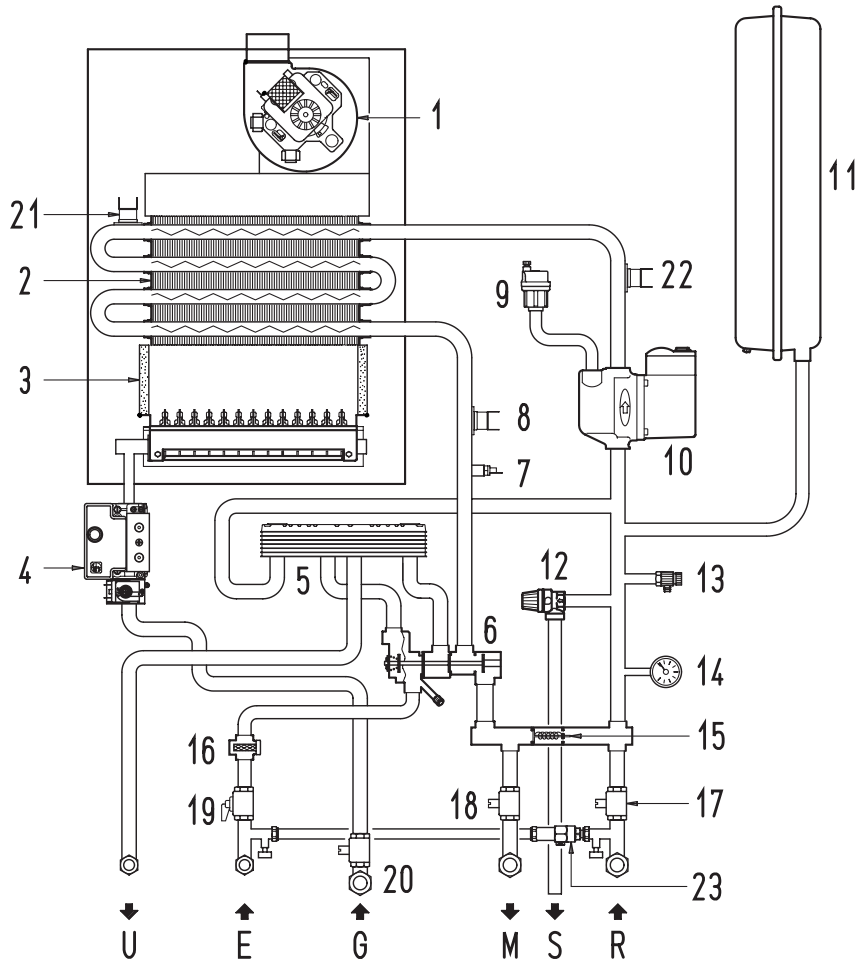

KEY
1 Fan
2 Water-gas exchanger
3 Combustion chamber
4 Gas valve
5 D.H.W. exchanger
6 Divertor valve with charging
7 NTC sensor
8 100°C safety thermostat
9 Air relief valve
10 Circulation pump
11 Expansion vessel
12 Safety valve
13 Drain plug
14 Manometer
15 Automatic by-pass
16 D.H.W. filter
17 C.H. return cock
18 C.H. flow cock
19 D.H.W. cock
20 Gas cock
21 Limit thermostat
22 Frost stat
23 Non-return valve

Fig. 2

2 GENERAL REQUIREMENTS FOR INSTALLATION

2.1 STATUTORY REQUIREMENTS

GAS SAFETY (INSTALLATION AND USE) REGULATIONS (as amended). It is the law that all gas appliances are installed by a registered person, in accordance with the above regulations. Failure to install appliances correctly could lead to prosecution. It is in your own interest, and that of safety, to ensure that the law is complied with.
In addition to the above regulations, this appliance must be installed in accordance with the current IEE Wiring Regulations (BS 7671), Local Building Regulations, the Building Standards (Scotland) (Consolidation) Regulations, Byelaws of the local water undertaking, and Health and Safety Document No 635 'The Electricity at Work Regulations 1989'.
It should also be in accordance with the relevant recommendations in the current editions of the following British Standards and Codes of Practice: BS5449, BS5546, BS5440:1, BS5440:2, BS6798, BS6891, and BG.DM2, BS7074, and BS5482 for propane installations.

Manufacturer's instructions must NOT be taken in any way as over-riding statutory obligations.

2.2 BOILER POSITION

In siting the combination boiler, the following limitations MUST be observed:

- The boiler is not suitable for external installation. The position selected for installation should be within the building, unless otherwise protected by a suitable enclosure, and MUST allow adequate space for installation, servicing, and operation of the appliance, and for air circulation around it (section 2.4).
- This position MUST allow for a suitable flue termination to be made. The combination boiler must be installed on a flat vertical wall which is capable of supporting the weight of the appliance, and any ancillary equipment.
- If the combination boiler is to be fitted in a timber framed building it should be fitted in accordance with the Institute of Gas Engineers document for Gas Installations In Timber Frame Housing, Reference 16E/UP/7: 1998. If in doubt, advice must be sought from the gas supplier
- If the appliance is installed in a room containing a bath or shower, any electrical switch or control utilising mains electricity must be so situated that it cannot be touched by a person using the bath or shower. Attention is drawn to the requirements of the current I.E.E. Wiring Regulations (BS 7671), and in Scotland the electrical provisions of the Building Regulations applicable in Scotland.
- A compartment used to enclose the appliance MUST be designed and constructed specifically for this purpose. An existing cupboard, or compartment, may be used provided it is modified accordingly.
- Where installation will be in an unusual location, special procedures may be necessary. BS6798 gives detailed guidance on this aspect.

2.3 FLUE TERMINAL POSITION

Detailed recommendations for flue installation are given in BS5440:1. The following notes are for general guidance:

- The boiler MUST be installed so that the terminal is exposed to the external air.
- It is important that the position of the terminal allows free passage of air across it at all times.
- It is ESSENTIAL TO ENSURE, in practice that products of combustion discharging from the terminal cannot re-enter the building, or any other adjacent building, through ventilators, windows, doors, other sources of natural air infiltration, or forced ventilation/air conditioning. If this does occur, the appliance MUST be turned OFF IMMEDIATELY and the gas supplier consulted.
- The minimum acceptable dimensions from the terminal to obstructions and ventilation openings are specified in fig. 3.

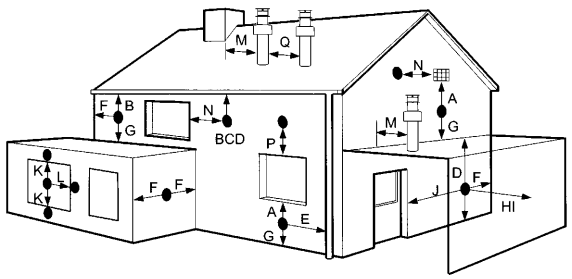

Fig. 3

TABLE 5

Terminal position		Minimum spacing in mm
A	Directly below an openable window, air vent or any other ventilation opening	300
B	Below guttering, drain pipes or soil pipes	25 *
C/D	Below eaves, balconies or carport roof	25 *
E	From vertical drain pipes or soil pipes	75
F	From internal or external corners	25
G	Above adjacent ground, roof or balcony level	300
H	From a surface facing the terminal	600
I	From a terminal facing the terminal	1,200
J	From an opening in the carport (e.g. door, window into dwelling)	1,200
K	Vertically from a terminal on the same wall	1,500
L	Horizontally from a terminal on the same wall	300
M	Horizontally from a vertical terminal to a wall	300
N	Horizontally from an openable window or other opening	300
P	Above an openable window or other opening	300

* With "heat shield" installed in accordance to BS 5440 Pt1.

- If the terminal discharges into a pathway or passageway check that combustion products will not cause nuisance and that the terminal will not obstruct the passageway.
- Where the lowest part of the terminal is fitted less than 2 m (78 in) above ground, above a balcony or above a flat roof to which people have access, the terminal MUST be

protected by a purpose designed guard. Terminal guards are available from Quinnell, Barrett, and Quinnell, Old Kent Road, London. State model C2, (G.C. Part No 382946).
- Where the terminal is fitted within 850 mm (34 in) of a plastic or painted gutter, or 450 mm (18 in) of painted eaves, an aluminium shield at least 1,500 mm (59 in) long must be fitted to the underside of the painted surface.
- The air inlet/outlet flue duct MUST NOT be closer than 25 mm (1 in) to combustible material.
- In certain weather conditions the terminal may emit a plume of steam. This is normal but positions where this would cause a nuisance should be avoided.

2.4 VENTILATION REQUIREMENTS

Detailled recommendations for air supply are given in BS5440:2.
The following notes are for general guidance:
- It is not necessary to have a purpose provided air vent in the room or internal space in which the appliance is installed.

2.5 GAS SUPPLY

- The gas supplier should be consulted at the installation planning stage in order to establish the availability of an adequate supply of gas.
- An existing service pipe MUST NOT be used without prior consultation with the gas supplier.
- A gas meter can only be connected by the gas supplier or their contractor.
- An existing meter should be of sufficient size to carry the maximum boiler input plus the demand of any other installed appliance. (BS6891: 1988).The gas required for the boiler is specified in *Table 4*.
- The governor at the meter must give a constant outlet pressure of 20 mbar (8 inwg) for natural gas when the appliance is running.
- The gas supply line should be purged.

  NOTE: Before purging open all doors and windows, also extinguish any cigarettes, pipes, and any other naked lights.

- The complete installation must be tested for gas soundness.
- It is important to assure an adequate gas supply to the appliance. No more than 3 m of 15 mm pipe should be used. Where the supply exceeds 3 m the pipe should be suitably sized only reducing to 15 mm for the last 3 m prior to the appliance.

2.6 ELECTRICITY SUPPLY

The appliance MUST be earthed. A mains supply of 230 V - 50 Hz single phase is required. All external controls and wiring MUST be suitable for mains voltage.
Wiring should be in 3 core PVC insulated cable NOT LESS than 0.75 mm^2 (24 x 0.2 mm) to BS6500, Table 16. Wiring external to the boiler MUST be in accordance with current I.E.E. Wiring Regulations (BS 7671) and local regulations. The supply connection to the flying lead provided MUST be made to a fused double pole switch, having a 3 mm (1/8 in) contact separation in both poles, serving only the boiler and system controls. The fuse rating should be as per the original instructions. This connection should be readily accessible and be made adjacent to the boiler (except in the case of bathroom installations for domestic boilers where the point of connection to the mains MUST be outside of the bathroom).

2.7 EXTERNAL CONTROLS (Refer to section 3.10)

The boiler is intended for use with a 240 V room thermostat. The connection is made inside the control box as described in section 3.10.

2.8 WATER SYSTEMS - GENERAL

- This appliance is designed for connection to sealed central heating water systems.
- Check that the mains water pressure is sufficient to produce the required D.H.W. flow rate, but does not exceed the maximum D.H.W. pressure (*Table 4*). If necessary, a pressure reducing valve must be fitted to the mains supply before the D.H.W. inlet connection.

2.9 REQUIREMENTS FOR SEALED WATER SYSTEMS

The heating system design should be based on the following information:
a) The available pump head is given in fig. 4.
b) A minimum flow rate corresponding to a heating differential of 11°C must be obtained at all times.
c) **A heating by-pass is usually only required when micro-bore piping is used on the system.** If however condition (b) can not be satisfied a heating by-pass should be fitted. If thermostatic radiator valves are to be installed, at least one radiator should be without a thermostatic valve (usually the bathroom radiator).
d) A sealed system must only be filled by a competent person using one of the approved methods shown in fig. 6. The system design should incorporate the connections appropriate to one of these methods.
e) The following paragraphs outline the specifications of the items fitted to the boiler.

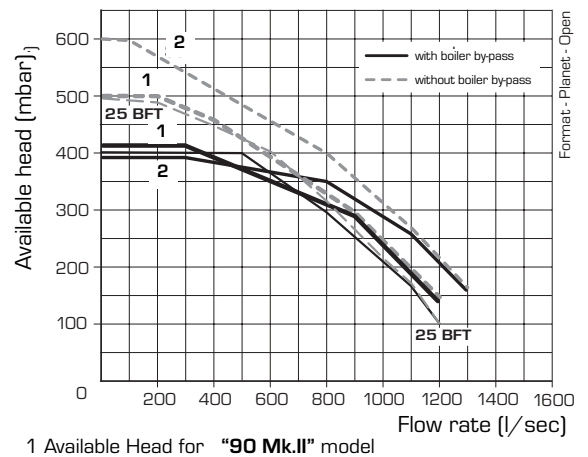

1 Available Head for **"90 Mk.II"** model
2 Available Head for **"105 Mk.II"** model

Fig. 4

TYPICAL SYSTEM DESIGN

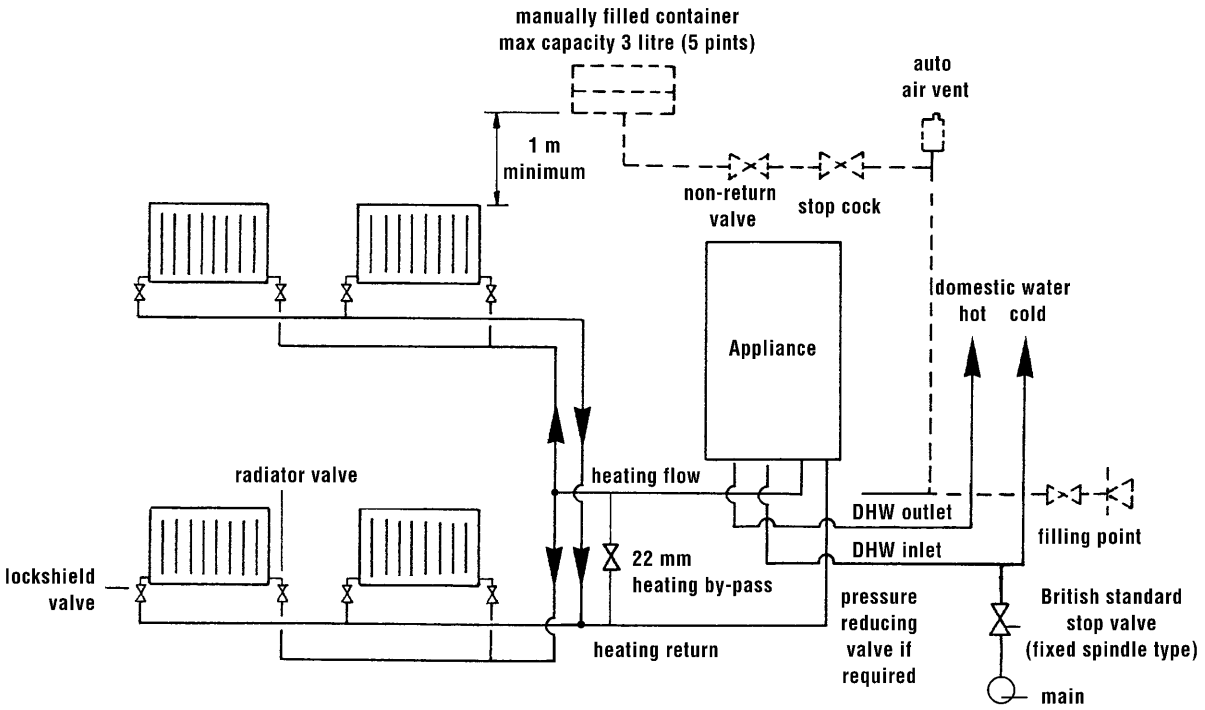

NOTE:

- A drain cock should be installed at the lowest point of the heating circuit and beneath the appliance.

Fig. 5

ALTERNATIVE METHODS OF FILLING A SEALED SYSTEM

METHOD 1 (complies with BS6798.1987)

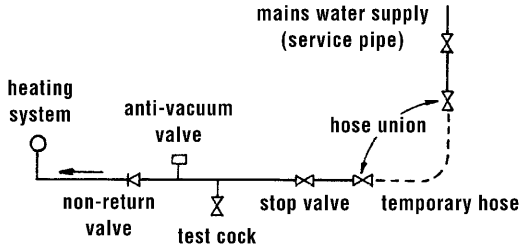

METHOD 2 (complies with BS6798.1987)

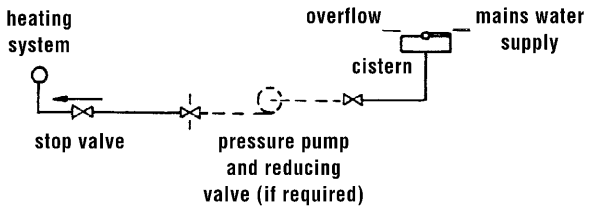

NOTES:

- When it is not possible to avoid a situation where the initial system pressure and static head are equal a manually fitted top up container should be fitted as shown above.
  Take note of the requirements relative to container capacity: height above system, inclusion of a non-return valve, stop cock and automatic air vent in the feed pipe, as shown in fig. 5.
  Note also the feed pipe connection is made to the heating return as close to the appliance as possible.
- The Local Water Undertaking MUST approve ALL connections between the system and a water storage cistern or water main supplying D.H.W.

Fig. 6

2.9.1 Pump

The available head shown in fig. 4 is that in excess of the appliance hydraulic resistance, i.e. that available for the system at any given heating load up to the maximum output in C.H. mode. Never reduce the pump speed below maximum as this will reduce D.H.W. output. The pump speed is indicated on the side of the pump speed selector switch (if fitted).

2.9.2 System volume (total water content)

The Table 6 gives the maximum system volume that the integral expansion vessel can sustain under different charge pressure conditions.
If the system volume exceeds that shown, an additional expansion vessel must be fitted and connected to the heating system primary return pipe as close as possible to the appliance.
If an extra vessel is required, ensure that the total capacity of both vessels is adequate. Further details are available in the current issues of BS5449 and BS6798.

NOTE: If the pressure gauge indicates 2.65 bar or greater when the appliance is at maximum temperature with all radiators in circulation an extra expansion vessel is required.

TABLE 6

Vessel charge and initial system pressure	bar psi	0.5 7.3	1.0 14.5	1.5 21.8
Total water content of system using 7 l (1.54 gal) capacity expansion vessel supplied with appliance (**"Super 90 Mk.II"**)	l gal	87 19.1	64 14.0	44 9.7
Total water content of system using 10 l (2.2 gal) capacity expansion vessel supplied with appliance (**"Super 105 Mk.II"**)	l gal	124 27.3	91 20.0	63 13.9
For systems having a larger capacity multiply the total system capacity in litres (gal) by the factor to obtain the total minimum expansion vessel capacity required litres (gal)		.0833	.109	.156

2.9.3 Pressure gauge

A pressure gauge is mounted on the appliance facia panel.

2.9.4 Safety valve

A safety valve set at 3 bar (43.5 psi) is fitted to the appliance and a discharge pipe is routed to outside of the appliance.
This discharge pipe should be extended to terminate safely away from the appliance and where a discharge would not cause damage to persons or property but would be detected. The pipe should be able to withstand boiling water, be a minimum of 15 mm in diameter, and not include any horizontal runs prone to freezing.

2.10 D.H.W. SYSTEMS

- The authority of the local Water Company should be obtained before the appliance is connected to the cold water mains supply.
  Check that the mains supply pressure is within the prescribed limits (*Table 4*).
  If necessary, a pressure reducing valve should be fitted to the mains supply before the D.H.W. inlet connection.
- The final 600 mm (24 in) of the mains supply pipe to the boiler must be copper.
- A maximum D.H.W. flow rate of 10.3 l/m (2.3 gpm) (13 l/m (2.9 gpm) for **"Super 105 Mk.II"**) is recommended. Higher flow rates will not damage the appliance but may lower the water temperature below an acceptable level.
- If the appliance is installed in an area where the temporary hardness of the water supply is high, say over 150 ppm, the fitting of an in line scale inhibitor may be an advantage. Consult the Local Water Undertaking if in doubt.
- Devices capable of preventing the flow of expansion water: e.g. non return valves and/or loose-jumpered stop cocks should not be fitted unless separate arrangements are made for expansion water.
- For specific information relating to fittings (eg. Showers, washing machines etc.) suitable for connection in the D.H.W. circuit, consult the Local Water Undertaking, however the following information is given for guidance.

2.10.1 Domestic hot/cold water supply taps and mixing taps

All equipment designed for use at mains water pressure is suitable.

2.10.2 Showers

Any mains pressure shower is suitable, but if the unit has a loose head which may become immersed in bath water either an anti-syphonage device must be fitted, or the length of the flexible hose must be reduced so that it cannot fall closer than 13 mm (1/2 in) to the top of the bath.

2.10.3 Bidets

Providing that the appliance is of the over-rim flushing type, the outlets are shrouded and it is impossible to attach a temporary hand held spray, no anti syphonage device is necessary.

3 INSTALLING THE BOILER

3.1 UNPACKING THE BOILER

The standard appliance is supplied in three separate cardboard cartons. In addition up to two extension duct kits may be used. If the appliance is to be installed without access to the outside wall, the wall liner will also be required.
Unpack each carton and check the contents against the following lists:

Appliance package:
- combination boiler (assembled);
- installation and servicing instructions;
- users instructions;

Flue package:
- inner duct (flue outlet) c/w flue terminal and centering springs;
- outer duct (air inlet);
- junction collar with protective metal sleeve;
- flue elbow with gasket;
- rubber sealing ring;
- aluminium ring.

Fixing jig pack:
- boiler mounting frame;
- fixing bracket.
- flue template;
- fixing screws with wall plugs;
- cardboard containing:
- gas service cock;
- C.H. F/R isolation valves;
- D.H.W. isolation valve;
- D.H.W. elbow connection;
- D.H.W. compression fitting;
- flexible pipe;
- extension for the gas cock;
- safety valve discharge pipe;
- associated gaskets;

3.2 FIXING THE BOILER MOUNTING FRAME (fig. 7)

Before installing the appliance ensure that the chosen location is suitable (section 2.2) and the requirements for flue position (section 2.3), and minimum clearances, (*Table 2*) are satisfied. These minimum clearances are essential to provide access for servicing.
- For the rear flue application fix the flue template (14) to the frame with the selftapping screws provided.
- Mark the position of the two upper installation frame fixing holes, the two lower frame fixing holes and the flue/air duct hole on the appropriate wall(s).
- Drill the top two fixing holes using a 10 mm masonry drill and the bottom two fixing holes using a 6 mm masonry drill. Fit the plastic plugs provided.
- Cut the hole in the wall for the flue/air duct. The diameter should not be less than 100 mm (4 in) and must be horizontal. If the hole is not accessible from the outside of the

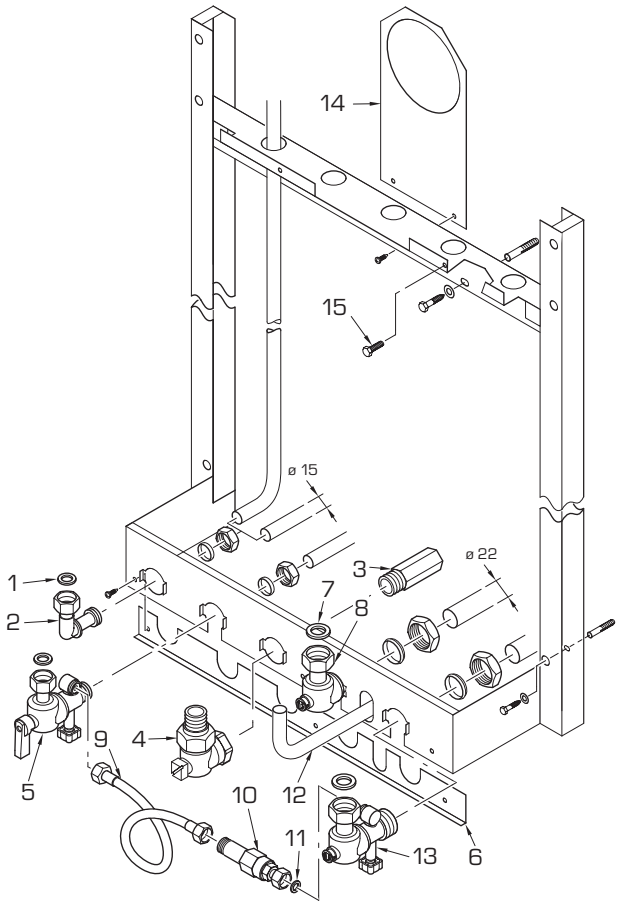

KEY
1 Gasket ø 13x18.6x1.5
2 D.H.W. outlet elbow
3 Extension for gas cock (if required)
4 Gas cock 1/2"
5 D.H.W. inlet isolation valve 1/2"
6 Fixing bracket
7 Gasket ø 17.5x23.9x1,5
8 C.H. flow isolation valve 3/4"
9 Flexible pipe
10 Non-return valve
11 Gasket ø 6x10.5x1
12 Safety valve discharge pipe
13 C.H. return isolation valve 3/4"
14 Flue template
15 Boiler inclination adjusting screw

Note: Item 6 can be discarded once boilier is on site

Fig. 7

building, its minimum diameter should be sufficient to allow the insertion of the wall liner (130 mm - 5 1/4 in diameter) which will be sealed with mortar. Refer to fig. 13. (The wall liner is available as an optional extra).
- Accurately measure the wall thickness, and note this dimension for later use.
- Remove the flue template and secure the installation frame in position using the screws provided.

3.3 WATER CONNECTIONS

Before installing the appliance it is possible to test the water system by means of the frame kit. The water connections may be done whether straight to the wall or in the vertical manner as shown in fig. 7.

3.3.1 Central heating connections (8-13 fig. 7)

- Fit the two C.H. isolation valves to the mounting frame as shown in the figure. The pipe connections are labelled on the mounting frame.
- Connect the C.H. pipework as required.

3.3.2 D.H.W. connections (5-2 fig. 7)

- Fit the D.H.W. isolation valve and the elbow connection to the installation frame as shown in the figure.
- Connect the D.H.W. pipework as required.

3.3.3 Filling loop connections

- Fit the non-return valve to the C.H. return isolation valve using the gasket provided (10-11 fig. 7).
- Fit the flexible pipe between the non-return valve and the D.H.W. isolation valve.
- Fit the fixing bracket to lock the isolations valves using the selftapping screws provided.

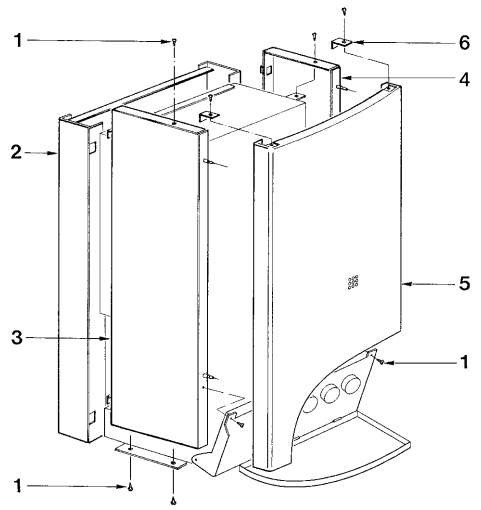

KEY

1	Self-tapping screw	4	R.H. side panel
2	Rear panel	5	Front panel
3	L.H. side panel	6	Fixing bracket

Fig. 8

3.4 HANGING THE BOILER

- Remove the outer casing front panel fixing screws (6 fig. 8) and remove the front panel (5 fig. 8) by pulling forwards, starting at the top corners.
- Lift the appliance into position. The upper cross member locates onto the installation frame.
- Screw the adjusting screws (15 fig. 7) until the appliance is secure and vertical.
- Connect the isolation valves to the boiler using the gaskets provided.

3.5 FLUE AND TERMINAL PREPARATION

If the wall thickness is less than 0.5 m (19 in) the flue/air duct may be fitted without access to the outside wall providing that the optional wall liner kit is used. (This consists of a steel pipe, 0.5 m long and 129 mm outside diameter with a 1 mm wall thickness).

3.5.1 Flue/air duct lengths

- Determine whether an extension duct is required with reference to the **Z** dimension shown in figs. 10-11-13. Alternatively max. flue lengths information is given in *Table 7*.
  Z Dimension UP TO 945 mm.
  No extension duct required.
  Z Dimension greater than 945 mm and up to 1,760 mm.
  One extension duct kit required.
  Z Dimension greater than 1,760 mm and up to 2,575 mm. Two extension duct kits required.
  Z Dimension greater than 2,575 mm and up to 3,000 mm. Three extension duct kits required.
  Z Dimension greater than 3,000 mm.
  NOT PERMITTED.
- If no extension ducts are required, procede to 3.5.2.
- If an extension duct or ducts is/are to be used, the flue and air ducts should be joined before proceeding to the next section. The extension ducts should be joined to each other and to the standard ducts using the following procedure (fig. 9).
- For the flue ducts in turn, push the plain end of the standard and (if using two or three extensions) extension duct into the swaged end of the extension duct(s).
- Push an air duct in to the clamp. Join the air ducts (larger ducts) and tighten the screws an the clamp to connect them.

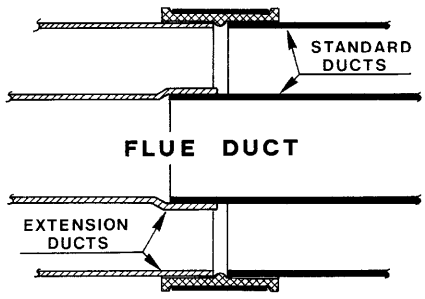

Fig. 9

3.5.2 Cutting the flue/air duct to the correct length

Rear flue outlet (Only - fig. 10)

- Select the air duct (larger duct) and starting at the formed end, 'mark off' the length to be cut which is the wall thickness **X** + 165 mm (6 1/2 in).

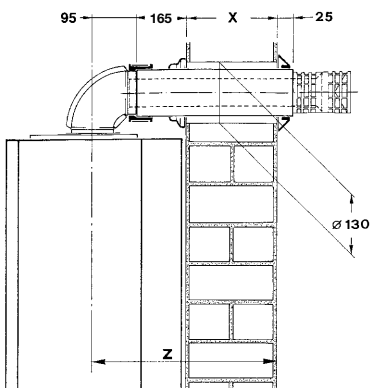

Fig. 10

Side flue outlet (Only - fig. 11)

- Select the air duct (larger duct) and starting at the formed end, 'mark off' the length to be cut which is the wall thickness **X** + the clearance **Y** plus 155 mm (6 $^1/_8$ in) for **"Super 90 Mk.II"** and 180 mm (7 in) for **"Super 105 Mk.II"**.

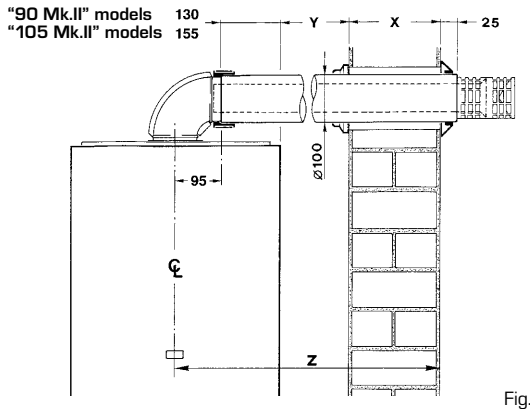

Fig. 11

TABLE 7 - Maximum flue lengths (measured from appliance casing to outside wall face)

"Super 90 Mk.II"	Rear outlet		R.H./L.H. side outlet	
	mm	in	mm	in
STANDARD FLUE KIT	710	28	715	28
WITH 1 EXTENSION KIT	1,525	60	1,530	60 $^1/_4$
WITH 2 EXTENSION KITS	2,340	92 $^1/_4$	2,345	92 $^1/_4$
WITH 2 $^1/_2$ EXTENSION KITS	2,765	109	2,775	109 $^1/_4$

"Super 105 Mk.II"	Rear outlet		R.H./L.H. side outlet	
	mm	in	mm	in
STANDARD FLUE KIT	740	28	690	27 $^1/_4$
WITH 1 EXTENSION KIT	1,555	60	1,505	59 $^1/_4$
WITH 2 EXTENSION KITS	2,370	92 $^1/_4$	2,320	91 $^1/_4$
WITH 2 $^1/_2$ EXTENSION KITS	2,795	109	2,750	108 $^1/_4$

All installations

- Cut the air duct square to the mark and remove all burrs and sharp edges.
- Refer to fig. 12. Hold the air duct at the plain end, and slide the flue duct (small duct) inside the air duct (terminal first) until the external swage of the terminal stops against the internal swage of the air duct, then mark off the length to be cut which leaves 20 mm protruding flue duct.
- Remove and cut the flue duct square to the mark and remove all burrs and sharp edges.

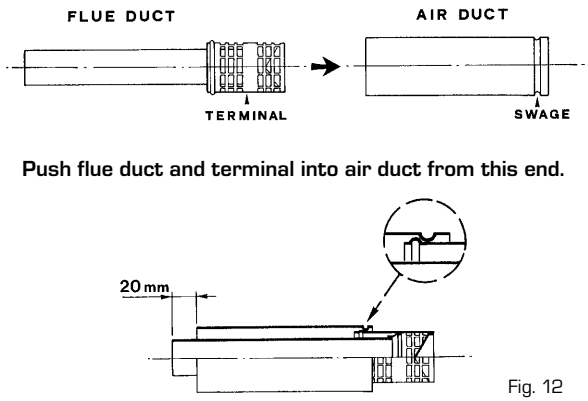

Fig. 12

3.6 FLUE AND TERMINAL INSTALLATION

A diaphragm is normally supplied together with boiler version **"Super 105 Mk.II"**. See fig. 13 for positioning.
ATTENTION: Install the diaphragm only when the length of the ø 60/100 coaxial pipe is less than 1 m.

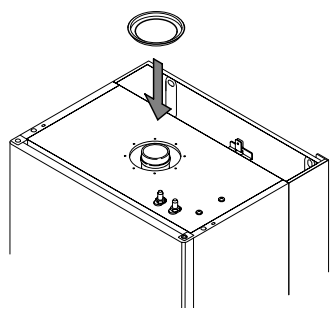
Fig. 13

3.6.1 Installations from inside the room

Wall thicknesses up to 0.5 m (19 in) only, Hole diameter sufficient to accept wall liner 130 mm (5 $^1/_4$ in) if optional kit is used.

- A wall liner, 127 mm (5 in) internal diameter, 500 mm (19 in) long is available as an optional extra for use when fitting the flue/air duct from inside the building, (or where it is required to seal the hole through a cavity wall). Cut the liner to the wall thickness, insert into the hole, and seal with mortar at inner and outer wall faces. Access to the outside can be made by inserting one's hand through the liner.
- Fit the rubber sealing ring into the swaged groove in the air duct as shown in fig. 13/a. Ensure that it is the correct

way around and spray the outside surface with talcum powder or soap solution to reduce friction.
- Push the flue duct assembly into the air duct until the external swaged ring on the flue terminal stops against the internal swage on the air duct (fig. 12).
- From inside the building slide the duct assembly into the wall liner until the sealing ring passes completely through the wall, then pull the air duct back until the ring is pulled up to the wall surface.
- Procede to section 3.6.3.

3.6.2 Installations from outside the building only (Hole diameter 100 mm - 4in)

- Push the flue duct assembly into the air duct until the external swaged ring on the flue terminal stops against the internal swage on the air duct (fig. 12).
- From inside or outside the building, slide the duct assembly into the wall until the sealing ring forms a good seal against the outside wall.
- Fit the rubber sealing ring into the swaged groove in the air duct as shown in fig. 13. Ensure that it is the correct way around.

3.6.3 Connecting the duct assembly - All installations

- With reference to fig. 13, slide on the aluminium retention ring (D), check that the rubber sealing ring (E) is pulled up to the wall and that the duct assembly is horizontal, then secure the aluminium retention ring to the air duct using the two screws (H) provided. Do not overtighten the screws.
- Push the junction collar (B) over the air duct until the air duct touches the inner part of the collar where the diameter becomes smaller.
- Push the elbow socket into the junction collar and onto the flue duct.
- Fit the protective metal collar (I) over the junction collar.
- Remove the six fixing screws securing the sealed chamber front panel then remove the panel.
- Place the gasket (G) under the flange of the elbow and fit the elbow onto the top of the appliance, taking care to ensure that the silicon seal on the fan outlet correctly engages and forms a seal at its joint with the elbow. This must be checked from inside the sealed chamber.
- Secure the elbow onto the top of the appliance using the four screws and washers provided, and refit the sealed chamber front panel.

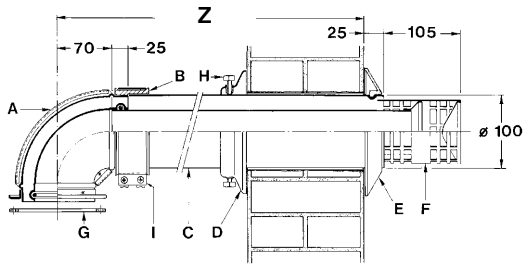

KEY
A Elbow flange
B Junction collar
C Outer duct
D Aluminium ring
E Rubber sealing ring
F Inner duct c/w terminal
G Gasket ø 95/125 x 2
H Fixing screw
I Protective metal collar
J Inner "O" ring

Fig. 13/a

3.7 SEPARATE DUCTS (Optional alternative twin pipe system)

When installing the separate ducts, comply with the requirements of the current standards, as well as the following practical pointers:
- The temperature on the surface of the discharge pipe, in the portions that pass through masonry and/or come into contact with walls should not exceed room temperature by more than 60°C (pr EN 483).
- With direct intake from outside, when the pipe is longer than 1 m, you are recommended to insulate the piping so as to prevent formation of dew on the outside of the piping during particularly cold periods of the year.
- With the outlet pipe outside the building or in cold indoor environments, insulation is necessary to prevent burner ignition failure. In such cases, provide for condensate drainage.

The maximum overall length of the intake and exhaust ducts depends on the head losses of the single fittings installed (excluding the adaptors) and must not be greater than 9.00 mm H_2O ("Super 90 Mk.II") - 11.00 mm H_2O ("Super 105 Mk.II").
For head losses in the fittings, refer to **Table 8**.

TABLE 8

Accessories ø 80	Head loss (mm H_2O)					
	"Super 90 Mk.II"			**"Super 105 Mk.II"**		
	Inlet	Outlet	Roof outlet	Inlet	Outlet	Roof outlet
90° elbow MF	0,30	0,40	–	0,30	0,50	–
45° elbow MF	0,20	0,30	–	0,20	0,40	–
Extension L. 1000 (horizontal)	0,20	0,30	–	0,20	0,40	–
Extension L. 1000 (vertical)	0,10	0,20	–	0,10	0,30	–
Outlet terminal	–	0,30	–	–	0,40	–
Intake terminal	0,10	–	–	0,10	–	–
Doubler fitting	0,50	1,50	–	0,50	1,80	–
Roof outlet terminal L.1240	–	–	0,50	–	–	0,60
Tee condensation outlet	–	0,90	–	–	1,10	–

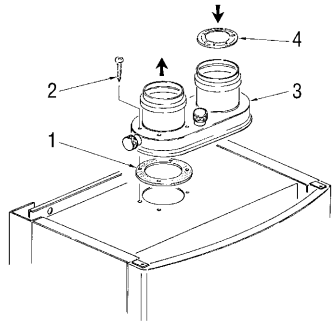

KEY
1 Sponge-rubber gasket ø125/95
2 Fixing screw
3 Air-smokes flow splitting unit with take-off point
4 Sectors diaphragm ø 38

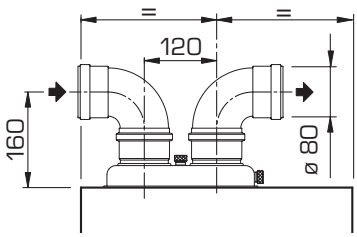

Fig. 14

"Super 90 Mk.II" version

Sectores of diaphragm to remove	Total head loss mm H_2O	Total head loss Pa
1	0 ÷ 2	0 ÷ 19,6
2	2 ÷ 3	19,6 ÷ 29,4
3	3 ÷ 4	29,4 ÷ 39,2
4	4 ÷ 5	39,2 ÷ 49,0
5	5 ÷ 6	49,0 ÷ 58,8
Remove diaphragm	6 ÷ 9	58,8 ÷ 88,2

"Super 105 Mk.II" version

Sectores of diaphragm to remove	Total head loss mm H_2O	Total head loss Pa
1	0 ÷ 2	0 ÷ 19,6
2	2 ÷ 3	19,6 ÷ 29,4
3	3 ÷ 4	29,4 ÷ 39,2
4	4 ÷ 5	39,2 ÷ 49,0
5	5 ÷ 6	49,0 ÷ 58,8
6	6 ÷ 7	58,8 ÷ 68,6
Remove diaphragm	7 ÷ 11	68,6 ÷ 107,8

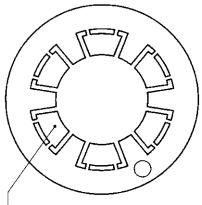

Fig. 15

Example of allowable installation calculation (**"Super 90 Mk.II"** model) in that the sum of the head losses of the single fittings is less than 9.00 mm H_2O:

	Intake	**Outlet**
7 meter horizontal pipe ø 80 x 0.20	1.40	–
7 meter vertical pipe ø 80 x 0.30	–	2.10
n° 2 90° elbows ø 80 x 0.30	0.60	–
n° 2 90° elbows ø 80 x 0.40	–	0.80
N° 1 terminal ø 80	0.10	0.30
Total head loss	2.10 +	3.20
	= **5.3 mm H_2O**	

With this total head loss, remove the ø 38 baffle from the intake pipe.

3.7.1 Separate flue accessories

Part No 8093000 is supplied for this purpose (fig. 14).
The sectored diaphragm is to be used according to the maximum head loss allowed in both pipes, as given in fig. 15.
The complete range of accessories necessary for satisfying all installation requirements is shown in fig. 16.

3.7.2 Separate-pipes roof outlet

The roof outlet terminal (1240 mm) cannot be shortened and when positioning the tile, the minimum distance from the dis-

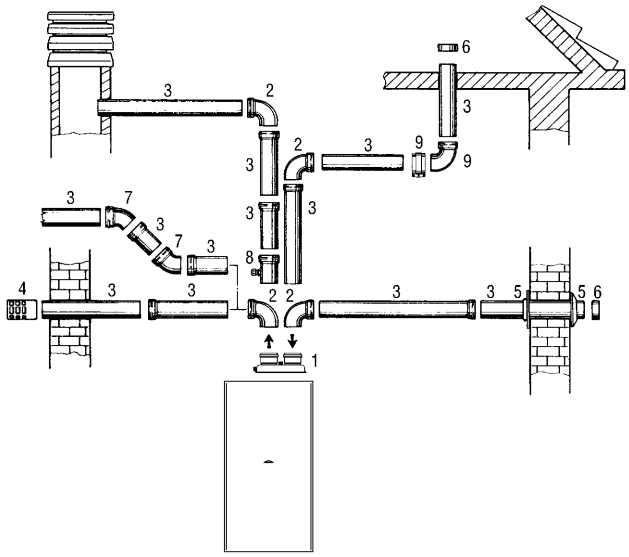

KEY

1	Air-smokes flow plitting unit with take-off point	code 8093000
2a	90° elbow MF	code 8077404
2b	Isolated 90° elbow MF	code 8077408
3a	Extension L. 1000	code 8077303
3b	Isolated extension L. 1000	code 8077306
4	Outlet terminal	code 8089501
5	Int.-est. ring kit	code 8091500
6	Intake terminal	code 8089500
7	45° elbow MF	code 8077406
8	Condensation outlet L. 135	code 8092800
9	Locking junction (n. 5)	code 8092700

Fig. 16

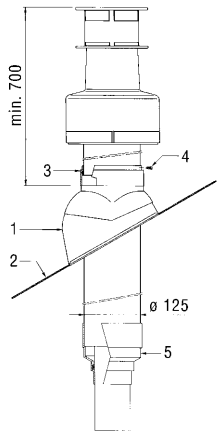

KEY
1 Tile with articulated joint
2 Lead panel
3 Collar
4 Locking screw
5 Reducing fitting with gasket

Fig. 17

charge head terminal must not be less than 700 mm (fig. 17). The accessories to be used for this type of installation and some of the connecting systems that may be adopted are illustrated in fig. 18. There is the possibility of separating the air-intake and flue-outlet dusts and then bringing them back together again so as to obtain a concentric discharge by using the doubler fitting (7 fig. 18). In these cases, when assembling, recover the silicone gasket used on the terminal adapter (5 fig. 17), which is to be replaced by the doubler, and insert it into the seat made in the doubler. **For this type of discharge the sum of the maximum rectilinear development allowed for the pipes must not exceed 9.00 mm H_2O ("Super 90 Mk.II") - 11,00 mm H_2O ("Super 105 Mk.II").** When calculating the lengths of pipe, take into account the parameters given in the **Table 2**.

3.8 GAS CONNECTIONS

- Screw the extension for the gas cock into the internal thread of the gas inlet connection using a suitable jointing compound.
- Screw the gas cock into the extension using a suitable jointing compound.
- Connect the gas supply pipe.

3.9 SAFETY VALVE CONNECTION

- The appliance safety valve is located towards the R.H.S. of the boiler and the discharge pipe is supplied loose.
  Remove the two selftapping screws and lower the control panel to improve access.
- Fit the discharge pipe to the valve outlet using the ogive inserted in the valve, and extend the pipe to ensure that any discharge from the safety valve is safely routed to a drain. The discharge pipe should be a minimum of 15 mm copper, and should avoid sharp corners or upward pipe runs where water may be retained.

3.10 WIRING INSTRUCTIONS (Refer to sections 2.6 - 2.7 and fig. 19)

The external wiring is connected to the boiler via a lead cable situated behind the control box at the L.H.S.
- If a room thermostat is to be used, unscrew the two screws at either side of the control box, pivot the box downwards, then remove the room thermostat connection cover (one screw) to gain access to connector TA.
- Remove the pre-wired kink and connect the room thermostat to terminals 22 and 23.
- Re-fit the room thermostat connection cover.

The thermostat or timer-thermostat, recommended for better room temperature control, must be class II as specified by standard EN 60730.1 (clean contact).

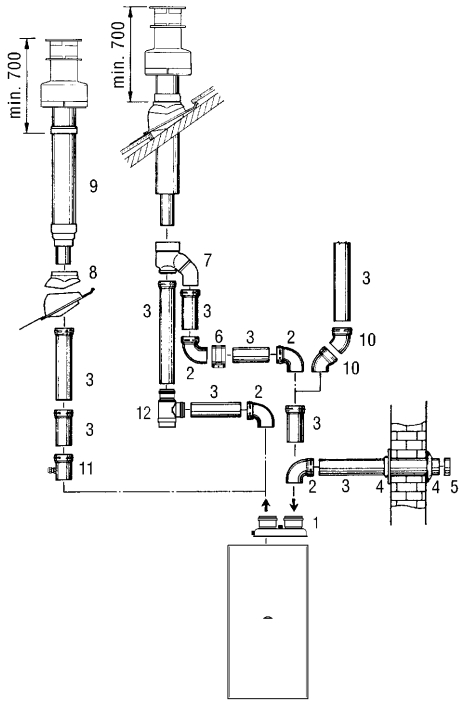

KEY

1	Air-smokes flow splitting unit with take-off point	code 8093000
2 a	90° elbow MF	code 8077404
2 b	Isolated 90° elbows MF	code 8077408
3 a	Extension L. 1000	code 8077303
3 b	Isolated extension L. 1000	code 8077306
4	Int.-est. ring kit	code 8091500
5	Intake terminal	code 8089500
6	Locking junction (n. 5)	code 8092700
7	Doubler fitting	code 8091400
8	Tile with articualted joint	code 8091300
9	Roof outlet terminal L. 1240	code 8091201
10	45° elbow MF	code 8077406
11	Condensation outlet L. 135	code 8092800
12	Tee condensation outlet	code 8093300

Fig. 18

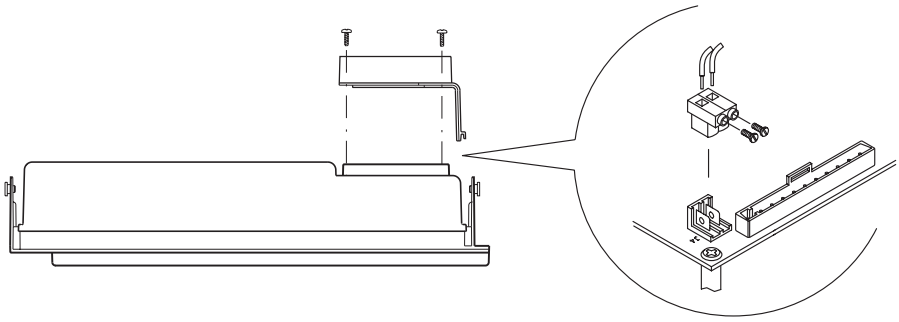

Fig. 19

- Carry out electrical system checks through a suitable test meter: earth continuity, polarity, resistance to earth and short circuit.
- Re-secure control box.

3.11 TIME-CLOCK INSTRUCTIONS

Setting the time
Turn the programming dial in clockwise direction to set the read off the 24-hour dial opposite the marking.

Program setting
Press inwards the segments on the program disk corresponding to the selected switching periods.
Function 1: segment set outwards (C.H. "ON")
Function 2: segment set inwards (C.H. "OFF")

Programming characteristics

Cycle	Number of actions per cycle	Program time per segment	Min. interval between two actions
24 hour	96	15 min.	15 min.

Manual override
0 = "OFF" permanently
🕒 = automatic programmed operation
1 = "ON" permanently

4 COMMISSIONING AND TESTING

SIME SUPPORT THE BENCHMARK INITIATIVE

All relevant sections of the logbook must be filled in at the time of installation and thereafter service information on the back page of the logbook. Commissioning of the boiler is not complete until the logbook is filled in.

Before commissioning the appliance, the whole gas installation including the meter MUST be purged and tested for gas soundness in accordance with BS6891.

IMPORTANT: open all doors and windows, extinguish naked lights, and DO NOT SMOKE whilst purging the gas line.
Before commencing the commissioning procedure, ensure that the gas service cock is turned on, the electricity supply is isolated, and that the D.H.W. and C.H. isolation valves are in the closed position.

4.1 FILLING THE WATER SYSTEM

- Open the C.H. flow and C.H. return valves (17 and 18 fig. 2).
- Loosen the automatic air vent cap (9 fig. 2).
- Open all radiator valves and system air vents. Fill the system with water using one of the approved methods described in section 2.9 to about 0.5 bar greater than the system design pressure. Close all air vents. Do not forget the one near the pump!
- Check the system for water soundness.
- Completely drain the appliance and heating system, thoroughly flush the system, and refill the system design pressure.
- Open the D.H.W. inlet valve, open any hot tap, clear of air bubbles. Close hot tap.

4.2 COMMISSIONING THE BOILER

- Remove the screw and connect a pressure gauge to the burner pressure test point on the gas valve (fig. 20 "SIT gas valve Tandem 837" - fig. 20/a "SIT gas valve Sigma 845").
- Ensure that the rotary switch on the facia panel is set to the SUMMER position "☀" (D.H.W. Only), turn the D.H.W. thermostat to maximum (fully clockwise), and turn on the electrical supply. Fully open any D.H.W. tap and the burner will light.
- Allow the boiler to run for at least 5 minutes and check that the burner pressure is as stated in section 1.3.
  The D.H.W. burner pressure is factory set and should not require adjusting. If the burner pressure is low, check that the appliance has not begun to modulate (this will occur if the D.H.W. flow rate is low. If modulation is suspected, open all D.H.W. taps to maximise flow and recheck burner pressure).Check also the inlet pressure with the burner alight; this should be 20 mbar (8 in.wg) +/- 2.5 mbar (1 in.wg) for natural gas. If it is necessary to adjust the D.H.W. burner pressure the method is described in section 8.6.
- Reduce the D.H.W. draw off rate to the minimum necessary to maintain the burner alight by carefully adjusting the

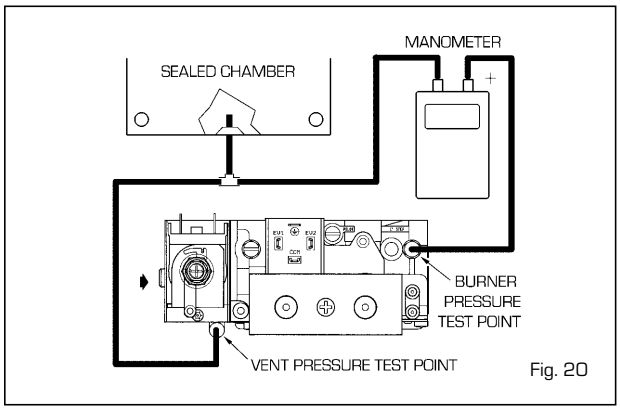

Fig. 20

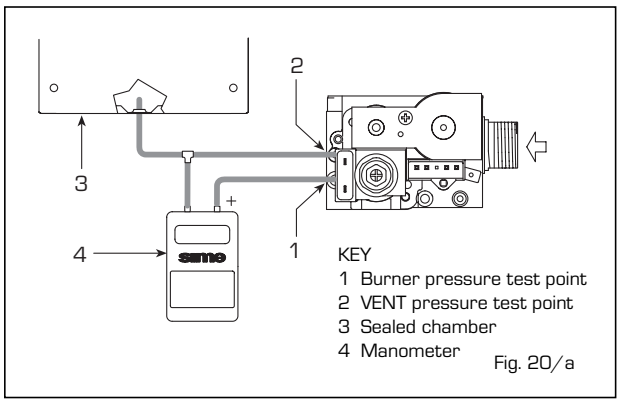

Fig. 20/a

D.H.W. inlet valve and check that the burner pressure decreases in response to D.H.W. temperature rise. Fully open the inlet valve.
- Close the D.H.W. tap and ensure that the burner is extinguished and the pump stops.

4.3 SETTING THE C.H. INPUT

- Turn the rotary switch to the WINTER position "❄" and ensure that the room thermostat (if fitted) is calling for heat. Turn the C.H. thermostat knob to maximum (fully clockwise) and the burner will light.
- Allow the boiler to run for at least 5 minutes and check the burner pressure. The heating input is factory set as stated in *Table 3*.
- If the heating output is to be adjusted, proceed as follows:
  - refer to section 1.3 and establish the desired burner pressure;
  - remove (pull forwards) the C.H. knob protecting the potentiometer;
  - set the burner pressure as required i.e. 3,5 mbar (natural gas), 7 mbar (L.P.G.), using a small screwdriver on potentiometer (1 fig. 21). Rotate the screw anti-clockwise to reduce the burner pressure;
  - operate the rotary switch between SUMMER and WINTER position a few times and check that the correct burner pressure is maintained.
  - Replace the C.H. knob over potentiometer.
  - To set the time clock proceed as follows:
  - push in the setting tabs around the clock dial at the times corresponding to when the heating is desired ON;
  - set the clock to the correct time by rotating the dial clockwise until the arrow corresponds to the current time.

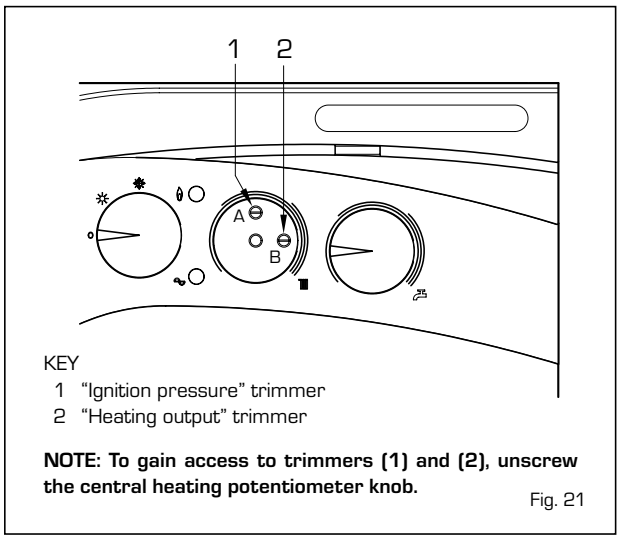

NOTE: To gain access to trimmers (1) and (2), unscrew the central heating potentiometer knob.
Fig. 21

4.4 SETTING THE D.H.W. FLOWRATE

A restrictor lever is fitted into the diverting valve to reduce the D.H.W. flow to that which will give an acceptable D.H.W. temperature. To set the D.H.W. flow, procede as follows:
- select Summer position "☀" and turn the D.H.W. thermostat to max.;
- fully open the D.H.W. tap furthest from the boiler;
- check that the boiler is firing at maximum burner pressure;
- adjust the D.H.W. flowrate by turning the restrictor lever on the divertor valve until a D.H.W. temperature rise of approx 35°C is achieved. This corresponds to the flowrates shown in *Table 4*;
- turn off the tap;
- remove the pressure gauge and refit the sealing screw;

Remember that the flow rates and corresponding temperatures of use of hot water, given in *Table 4*, have been obtained by positioning the selector of the circulation pump on the maximum value.

Should there be any reduction in the D.H.W. flow rate, the filter installed on the inlet to the pressure switch valve will need cleaning. To gain access to the filter, first close the cold water isolation valve (19, figure 2), drain the D.H.W. circuit via the lowest tap, make provision to collect a small discharge of water, then loosen the brass swivel connection to access the filter.

4.5 FINAL CHECKS

- Re-light and test for gas soundness.
- Re-fit the casing front panel and securing brackets.
- Set the C.H. and D.H.W. potentiometers to the required settings.
- Ensure that the time clock is set at the desired time periods. Set the room thermostat (if fitted) to the required setting.

4.6 USER'S INSTRUCTIONS

Upon completion of commissioning and testing the system,

the installer should:

- Give the "Users Instructions" to the householder and emphasise their responsibilities under the "Gas Safety (Installation and Use) Regulations 1996 (as amended)".
- Explain and demonstrate the lighting and shutdown procedures.
- Advise the householder on the efficient use of the system, including the use and adjustment of all system controls for both D.H.W. and C.H.
- Advise the user of the precautions necessary to prevent damage to the system, and to the building, in the event of the system remaining inoperative during frost conditions.
- Explain the function of the boiler overheat thermostat, and how to reset it. Emphasise that if cut-out persists, the boiler should be turned off and the installer or service engineer consulted.
- Stress the importance of an annual service by a registered heating engineer.

GAS BOILER SYSTEM COMMISSIONING CHECKLIST

This Commissioning Checklist is to be completed in full by the competent person who commissioned the boiler as a means of demonstrating compliance with the appropriate Building Regulations and then handed to the customer to keep for future reference.

Failure to install and commission according to the manufacturer's instructions and complete this Benchmark Commissioning Checklist will invalidate the warranty. This does not affect the customer's statutory rights.

Customer Name _____ Telephone Number _____

Address _____

Boiler Make and Model _____

Boiler Serial Number

Commissioned by *(print name)* _____ Gas Safe Register Number _____

Company Name _____ Telephone Number _____

Company Address _____

_____ Commissioning Date _____

To be completed by the customer on receipt of a Building Regulations Compliance Certificate*:

Building Regulations Notification Number *(if applicable)*

CONTROLS Tick the appropriate boxes

Time and Temperature Control to Heating	Room Thermostat and Programmer/Timer ☐	Programmable Room Thermostat ☐	Load/Weather Compensation ☐	Optimum Start Control ☐
Time and Temperature Control to Hot Water		Cylinder Thermostat and Programmer/Timer ☐		Combination Boiler ☐
Heating Zone Valves			Fitted ☐	Not Required ☐
Hot Water Zone Valves			Fitted ☐	Not Required ☐
Thermostatic Radiator Valves			Fitted ☐	Not Required ☐
Automatic Bypass to System			Fitted ☐	Not Required ☐
Boiler Interlock				Provided ☐

ALL SYSTEMS

The system has been flushed and cleaned in accordance with BS7593 and boiler manufacturer's instructions Yes ☐

What system cleaner was used?

What inhibitor was used? Quantity _____ *litres*

CENTRAL HEATING MODE Measure and Record:

Gas Rate	_____	m^3/hr	OR		_____ ft^3/hr
Burner Operating Pressure (if applicable)	_____	mbar	OR	Gas Inlet Pressure	_____ mbar
Central Heating Flow Temperature					_____ °C
Central Heating Return Temperature					_____ °C

COMBINATION BOILERS ONLY

Is the installation in a hard water area (above 200ppm)? Yes ☐ No ☐

If yes, and if required by the manufacturer, has a water scale reducer been fitted? Yes ☐ No ☐

What type of scale reducer has been fitted?

DOMESTIC HOT WATER MODE Measure and Record:

Gas Rate	_____	m^3/hr	OR		_____ ft^3/hr
Burner Operating Pressure (at maximum rate)	_____	mbar	OR	Gas Inlet Pressure (at maximum rate)	_____ mbar
Cold Water Inlet Temperature					_____ °C
Hot water has been checked at all outlets				Yes ☐ Temperature	_____ °C
Water Flow Rate					_____ *l/min*

CONDENSING BOILERS ONLY

The condensate drain has been installed in accordance with the manufacturer's instructions and/or BS5546/BS6798 Yes ☐

If the condensate pipe terminates externally has the pipe diameter been increased and weatherproof insulation fitted? Yes ☐

ALL INSTALLATIONS

If required by the manufacturer, record the following CO_2 _____ % OR CO _____ *ppm* OR CO/CO_2 Ratio _____

The heating and hot water system complies with the appropriate Building Regulations Yes ☐

The boiler and associated products have been installed and commissioned in accordance with the manufacturer's instructions Yes ☐

The operation of the boiler and system controls have been demonstrated to and understood by the customer Yes ☐

The manufacturer's literature, including Benchmark Checklist and Service Record, has been explained and left with the customer Yes ☐

Commissioning Engineer's Signature _____

Customer's Signature _____

(To confirm satisfactory demonstration and receipt of manufacturer's literature)

*All installations in England and Wales must be notified to Local Authority Building Control (LABC) either directly or through a Competent Persons Scheme. A Building Regulations Compliance Certificate will then be issued to the customer.

benchmark

©Heating and Hotwater Industry Council (HHIC)

www.centralheating.co.uk

Service Record

It is recommended that your heating system is serviced regularly and that the appropriate Service Interval Record is completed. This is also a condition of any extended warranty offered.

Service Provider

Before completing the appropriate Service Record below, please ensure you have carried out the service as described in the manufacturer's instructions.

Always use the manufacturer's specified spare part when replacing controls.

Service 1 Date:

Engineer Name:

Company Name:

Telephone No.

Gas Safe Register No.

Comments:

Signature:

Service 2 Date:

Engineer Name:

Company Name:

Telephone No.

Gas Safe Register No.

Comments:

Signature:

Service 3 Date:

Engineer Name:

Company Name:

Telephone No.

Gas Safe Register No.

Comments:

Signature:

Service 4 Date:

Engineer Name:

Company Name:

Telephone No.

Gas Safe Register No.

Comments:

Signature:

Service 5 Date:

Engineer Name:

Company Name:

Telephone No.

Gas Safe Register No.

Comments:

Signature:

Service 6 Date:

Engineer Name:

Company Name:

Telephone No.

Operative ID No.

Comments:

Signature:

Service 7 Date:

Engineer Name:

Company Name:

Telephone No.

Gas Safe Register No.

Comments:

Signature:

Service 8 Date:

Engineer Name:

Company Name:

Telephone No.

Gas Safe Register No.

Comments:

Signature:

Service 9 Date:

Engineer Name:

Company Name:

Telephone No.

Gas Safe Register No.

Comments:

Signature:

Service 10 Date:

Engineer Name:

Company Name:

Telephone No.

Gas Safe Register No.

Comments:

Signature:

5 ROUTINE SERVICING INSTRUCTIONS

To ensure continued efficient operation of the appliance, it is recommended that it is checked and serviced as necessary at regular intervals. The frequency of servicing will depend upon the particular installation conditions and usage but in general once a year should be adequate. It is the law that any service work must be carried out by registered personnel (Gas Safe Register). Before commencing any service operation, ISOLATE the mains electrical supply, and TURN OFF the gas supply at the main service cock. Service the appliance by following the full procedure detailed below.

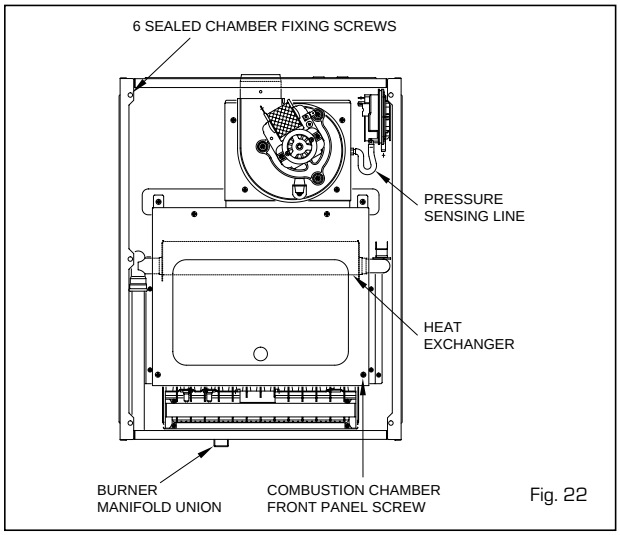

Fig. 22

5.1 MAIN BURNER ASSEMBLY

- Remove the front casing panel by unscrewing the retaining screws and brackets situated above the front panel, and pulling the panel forwards from the top corners.
- Remove the 6 fixing screws securing the sealed chamber front panel then remove the panel.

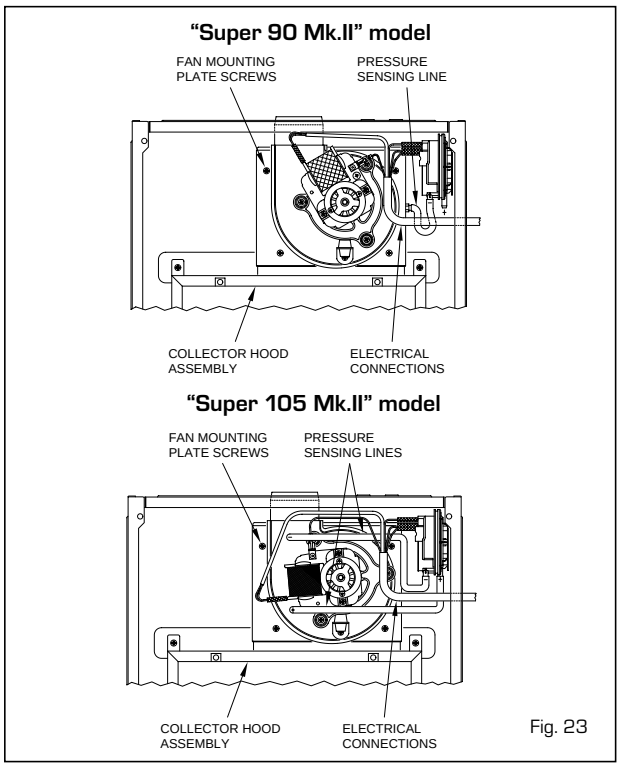

Fig. 23

- Unscrew the 4 screws securing the combustion chamber front panel and remove the panel, taking care not to damage the insulation.
- Unplug the HT lead from the ignition electrode, then remove the detection electrode from the burner (one screw).
- Unscrew the burner manifold union and locking nut.
  Lift the front of the burner to disengage manifold thread and then lift the burner clear.
- Remove the burner manifold by disconnecting the four screws.
- Inspect and if necessary, clean the injectors, electrodes, and the main burner bars

5.2 FAN ASSEMBLY

- Disconnect the electrical connections to the fan. Note the position of the earth conductor.
- Remove the four screws securing the fan mounting plate.
- Tilt the fan assembly forwards and remove in a downwards direction.
- Inspect the fan assembly and clean if necessary.

5.3 HEAT EXCHANGER

- Pull off the pressure sensing line(s) from the flue hood.
- Lift the collector hood assembly, tilt forwards and remove the hood.
- Inspect the heat exchanger, and clean if necessary.

5.4 RE-ASSEMBLY

- Re-assemble all the components in reverse order and replace all the gaskets fitted in the gas line. Ensure that all seals are correctly fitted and that the pressure sensing line is correctly fitted. Check that the fan earth connection is correctly re-fitted. Note that the fan polarity (Line and Neutral) is immaterial.
- Check for gas soundness before fitting the casing front panel.

5.5 RE-COMMISSIONING

- Turn on the gas supply, and check for gas soundness whilst the appliance is running.
- Check the operation of the appliance in both C.H. and D.H.W. mode and ensure in both cases that the burner pressure after at least 5 minutes running is as stated on the data plate or in *Table 3*.
  Adjust if necessary as described in section 8.

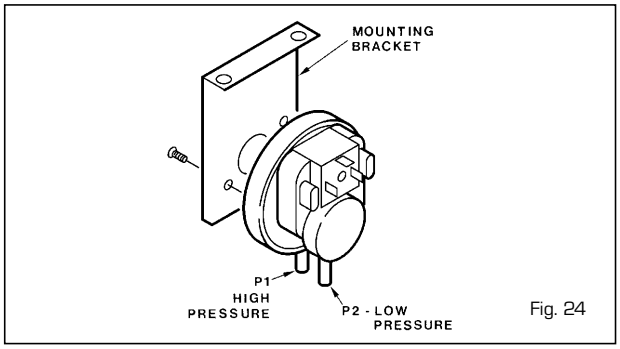

Fig. 24

6 FAULT FINDING

If an electrical fault occurs on the appliance the preliminary electrical system checks contained in the British Gas Multimeter Instruction Booklet must be carried out first. When any service or replacement of electrical components which has required the breaking and re-making of electrical connections has taken place, the following tests must be repeated:

- earth continuity;
- short circuit;
- polarity;
- resistance to earth.

6.1 EARTH CONTINUITY CHECK

Appliances must be electrically disconnected, meter set on Ω (ohm) x 1 scale and adjust zero if necessary. Tests leads from any appliance earth point (e.g. inside control box) see wiring diagrams (section 7) to earth pin on plug. Resistance should be less than 1 Ω (ohm). If the resistance is greater than 1 Ω (ohm) check all earth wires for continuity and all contacts are clean and tight. If the resistance to earth is still greater than 1 Ω (ohm) then this should be investigated further.

6.2 SHORT CIRCUIT CHECK

Switches turned FULL ON - meter set on Ω (ohms) x 1 scale. Test leads from L to N on appliance terminal block, if meter reads 0 then there is a short circuit.
Meter set on Ω (ohm) x 100 scale. Repeat it with leads from L to E. If meter reads less than infinity (∞) there is a fault.

NOTE: Should it be found that the fuse has failed but no fault is indicated, a detailed continuity check (i.e. by disconnecting and checking each component) is required to trace the faulty component.
It is possible that a fault could occur as a result of local burning/arcing but no fault could be found under test. However, a detailed visual inspection should reveal evidence of burning around the fault.

6.3 POLARITY CHECK

Appliance reconnected to mains supply and meter set on 300 V ac scale. Test at appliance terminal block.

- Test leads from L to N meter reads approx.: 240 V ac.
- Test leads from L to E "⏚" meter reads approx. 240 V ac.
- Test leads from N to E "⏚" meter reads from 0 to 15 V ac.

6.4 RESISTANCE TO EARTH CHECK

Appliance must be disconnected from main supply and meter on Ω (ohm) x 100 scale.
All switches including thermostat on test leads from L to E - if meter reads other than infinity (∞) there is a fault which should be isolated. A detailed continuity check is required to trace the faulty component.

IMPORTANT:
These series of checks are the first electrical checks to be carried out during a fault finding procedure. On completion of the service / fault finding task which has required the breaking and remaking of electrical connections then the checks 6.1 Earth continuity, 6.3 Polarity and 6.4 Resistance to earth must be repeated.
Before commencing any service operation, ISOLATE the mains electrical supply, and TURN OFF the gas supply at the main service cock. It is the law that any service work must be carried out by registered personnel (Gas Safe Register).

6.5 C.H. MODE - FAULT FINDING

Start from cold — Rotary switch set to WINTER position.
Room thermostat (if fitted) calling for heat and all D.H.W. taps off.
C.H. thermostat set to maximum position.
Clock in the on position (if fitted).

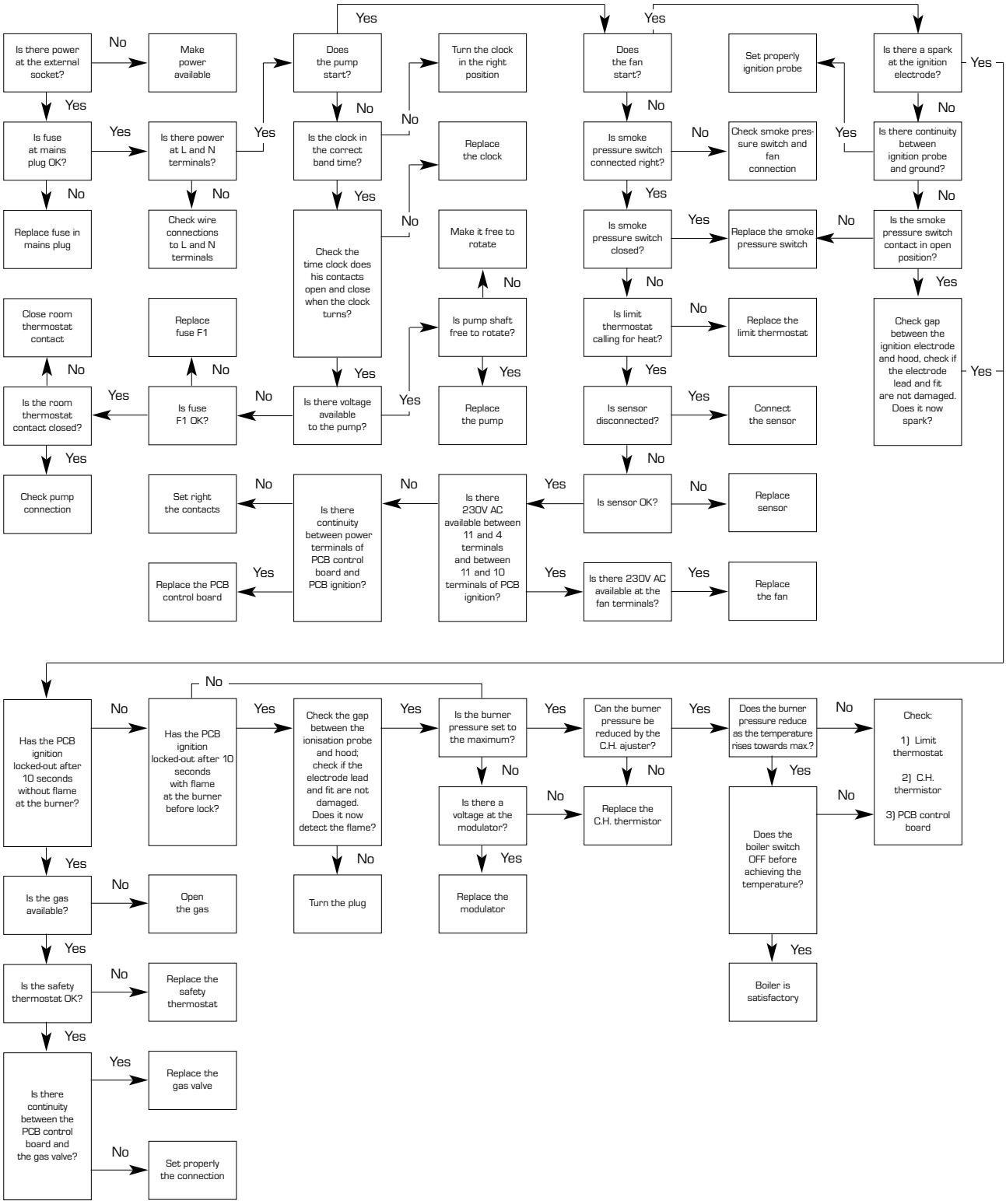

NOTE:
After completing fault finding reset the room thermostat (if fitted) to the required setting. If the appliance will not function check the wiring to the clock and if necessary, replace the clock.

6.6 D.H.W. MODE - FAULT FINDING

Start from cold - rotary switch set to SUMMER position, D.H.W. thermostat set to maximum, and all D.H.W. taps OFF.

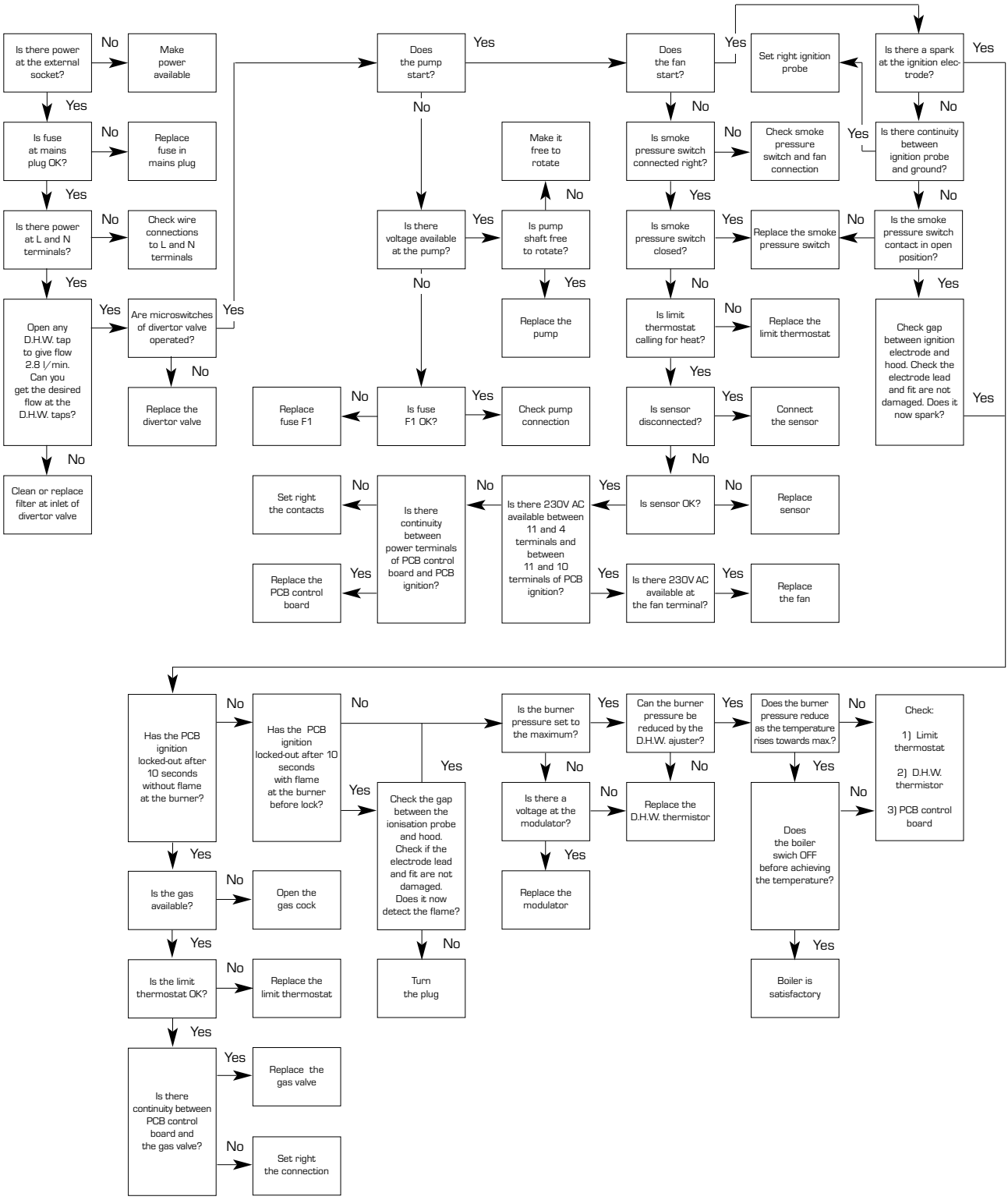

NOTE:
When commissioning the boiler, please check the polarity in case the pump and the fan are running but the burner does not fire.

7 INTERNAL WIRING DIAGRAM AND VIEW

7.1 FUNCTIONAL FLOW WIRING DIAGRAM

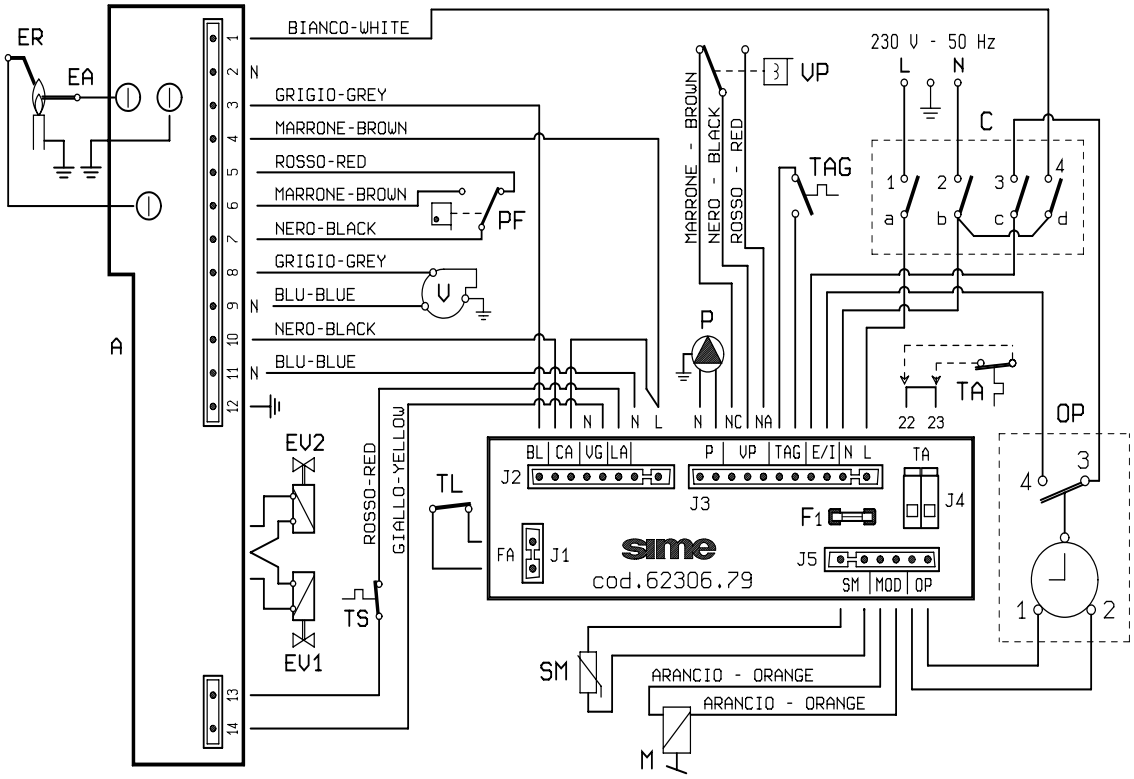

KEY

L	Phase	V	Fan
N	Neutral	P	Circulation pump
EV1	Gas valve coil	VP	Divertor valve
EV2	Gas valve coil	TAG	Frost thermostat
EA	Ignition electrode	C	Rotary switch
ER	Detection electrode	TA	Room thermostat
A	SIT 503 control box	M	Modulator
TS	100°C safety thermostat	SM	C.H. sensor
OP	Time clock	TL	Limit thermostat
PF	Air pressure switch	F1	Fuse

Note: The room thermostat must be connected to the terminals 22-23

Fig. 25

7.2 INTERNAL VIEW

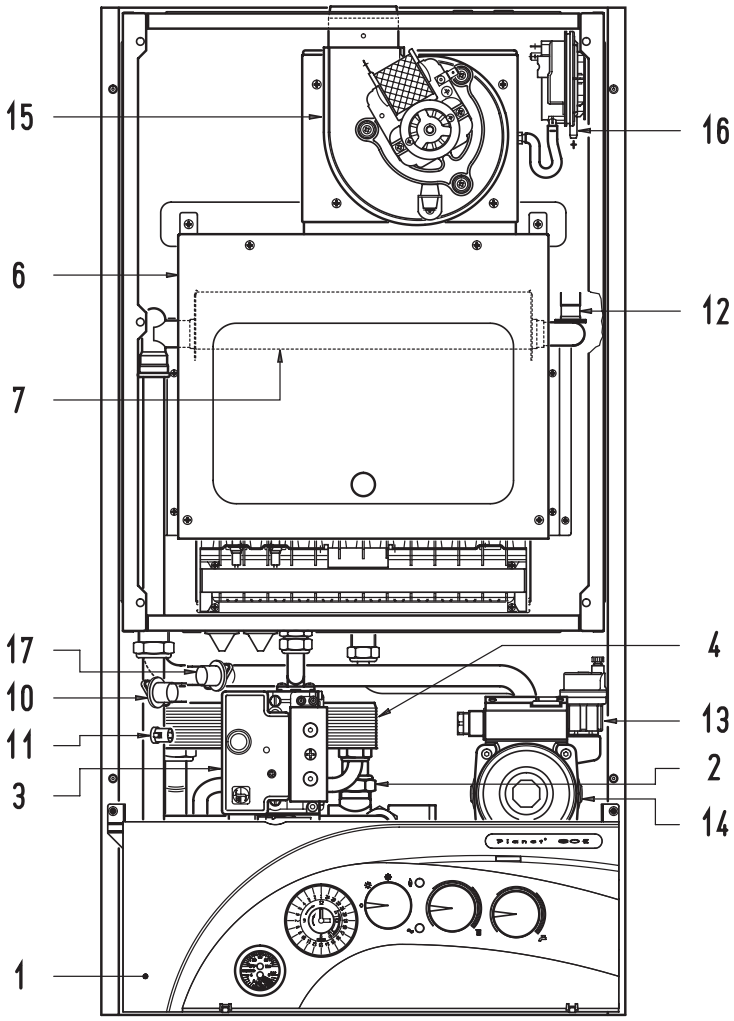

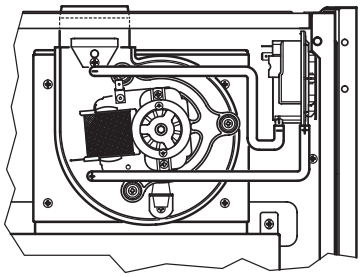

"Super 105 Mk.II" model

KEY

1 Control panel
2 Divertor valve
3 Gas valve with control box
4 D.H.W. exchager
6 Combustion chamber
7 Water-gas exchager
10 100°C safety thermostat
11 NTC sensor
12 Limit thermostat
13 Air relief valve
14 Circulating pump
15 Fan
16 Smoke pressure switch
17 Frost stat

Fig. 26

8 REPLACEMENT OF PARTS

8.1 HEAT EXCHANGER

- Remove the fan as described in section 8.3.
- Disconnect the pressure sensing pipe from the flue box, lift the collector hood assembly, tilt forwards, and remove the hood.
- Isolate the C.H. flow and return valves.
- Drain the heat exchanger using the drain cock (at the bottom RHS of the appliance)
- Unclip the heat exchanger securing clips, then lift out the heat exchanger.
- Re-assemble in reverse order, ensuring that the heat exchanger seals and clips are correctly located and that the pressure sensing pipe is correctly re-fitted. The fan polarity is not important except the earth conductor (G/Y which is marked on the appliance).
- Refill, and re-commission the system as described in section 4.

8.2 COMBUSTION CHAMBER INSULATION

The design of this appliance is such that the rear and side insulation should not require replacement unless mechanically damaged.

IMPORTANT: When handling insulation panels, take care to avoid producing or inhaling dust particles. When removing old or damaged insulation panels, dampen with water to minimise dust.

To replace the insulation front panel, proceed as follows:

- remove the combustion chamber front panel as described in section 5.1;
- replace the front insulation panel and glue it into position on the front panel using the glue supplied. Re-assemble in reverse order.

Should the rear or side panels become damaged, replace them as follows.

- remove the heat exchanger as described in section 8.1;
- remove the side insulation panels followed by the rear panel;
- re-assemble in reverse order, refill, and recommission the system as described in section 4.

8.3 FAN ASSEMBLY

- Remove the casing front panel and sealed chamber front panel as described in section 5.1.
- Disconnect the electrical connections to the fan. Note the position of the earth conductor.
- Unscrew the four screws securing the fan mounting plate.
- Drop and tilt the fan assembly forwards and remove in a downwards direction.
- Unscrew the three screws retaining the fan on the fan plate. Remove the fan assembly.
- Transfer the fan outlet seal onto the new fan.
- Re-assemble in reverse order. Ensure that the earth connection is correctly refitted. Note that the polarity (Line and Neutral) is immaterial.

8.4 MAIN BURNER

- Remove the main burner by following section 5.1.
- Transfer the ignition electrode onto the new burner assembly.
- Re-assemble in reverse order. Check the electrode gaps (fig. 27) and test for gas soundness.
- Re-commission the appliance as described in section 4.

8.5 IGNITION/DETECTION ELECTRODES

- Remove the casing front panel and sealed chamber front panel as described in section 5.1.
- Unscrew the single screw securing the electrode in position, and release the electrode from the burner.
  Ignition electrode:
  Pull off the HT lead from the base of the electrode, and replace the electrode.
  Detection electrode:
  Follow the detection lead back to the control box. Unscrew the two screws from the front of the control box and remove the control box plastic front cover.
- Carefully remove the electrode and integral lead from the appliance. Replace the electrode assembly, and carefully route the lead through the grommet below the burner and to the control box.
- Re-assemble in reverse order.

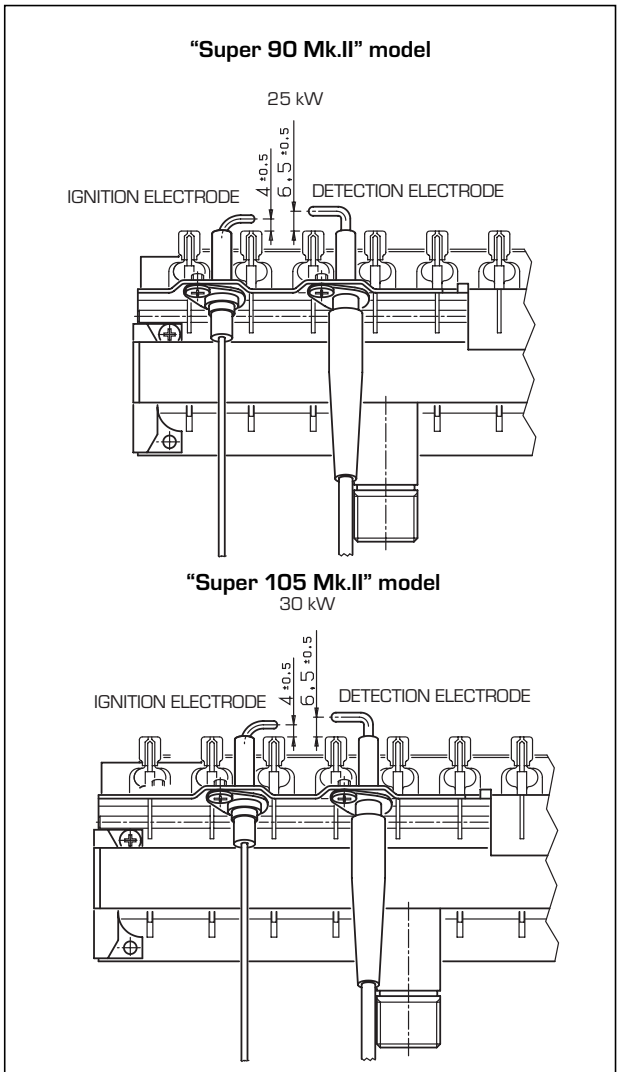

Fig. 27

8.6 GAS VALVE

- Remove the casing front panel as described in section 5.1.
- Unscrew the single screw securing the plastic ignition control box to the gas valve and pull off the control box in a forwards direction.
- Disconnect the two leads from the modulating solenoid.
- From underneath the appliance, unscrew the four posi-head screws securing the gas valve inlet pipe flange.
- Remove the two screws securing the control box and pivot the control box downwards
- Unscrew the burner manifold nut underneath the sealed casing, and withdraw the gas valve complete with outlet pipe.
- Transfer the outlet pipe onto the new gas valve, using a new gasket (supplied with the valve).
- Fit the new gas valve assembly into the appliance using the other new gasket supplied on the valve inlet, and re-assemble in reverse order.
- Re-light the appliance, check for gas soundness, and re-commission in accordance with section 4.

In addition it will be necessary to set the D.H.W. and C.H. heat inputs, with reference to fig. 28, as follows: (SIT gas valve). Note that it is necessary to set the MAXIMUM PRESSURE FIRST.

- Connect a pressure gauge to the burner pressure test point.
- Remove the sealing cap of the proportioning unit (C) by rotating it/turn anticlockwise.
- Adjust DHW potentiometer to maximum, then fully open any DHW tap to light the boiler.
- Using a 10 mm spanner, turn nut (B) to attain the maximum pressure in *Table 3*.
  Turn the nut clockwise to increase or anti-clockwise to decrease the burner pressure.
- Turn the main selector switch on and off a few times (with the hot tap still open) and check that the pressure returns to the correct (set) maximum value (as in *Table 3*).
- Set the minimum burner pressure by first isolating the electricity supply and disconnecting one of the modulating solenoid leads, then restore the electricity supply and fully open a DHW tap to light the appliance at minimum gas rate.
- Set the minimum pressure of 1.5 mbar by holding nut (B) in position with a 10 mm spanner and rotating the plastic screw (A) with a screwdriver until the correct pressure is obtained. Turn the screw clockwise to increase the pressure or anti-clockwise to decrease it. It is essential that the max pressure has been set prior to adjusting the minimum pressure. Check that the minimum pressure is correctly set by turning on and off the D.H.W. inlet valve several times and ensuring that the pressure returns to that previously adjusted;
- Isolate the power supply, re-connect the modulation lead, restore the power and re-check the maximum pressure, then re-fit the plastic cover (1).
- Reduce the D.H.W. draw off rate to the minimum necessary to maintain the burner alight by carefully adjusting the D.H.W. Inlet valve and check that the burner pressure decreases in response to D.H.W. temperature rise. Fully open the inlet valve;
- Close the D.H.W. tap and ensure that the burner is extinguished and the pump stops.
- Adjust the Central Heating maximum pressure as described in section 4.3, then complete the re-commissioning as described in 4.4 and 4.5.

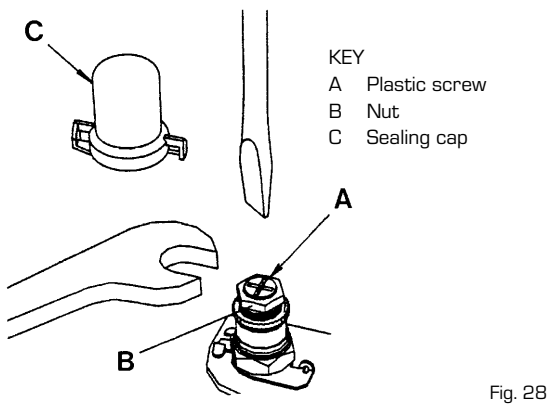

Fig. 28

8.7 AIR PRESSURE SWITCH

- Remove the casing front panel and sealed chamber front panel as described in section 5.1.
- Disconnect the pressure sensing pipe from the switch.
- Unscrew and remove the two screws securing the mounting bracket.
- Remove the switch from the bracket (two screws) and fit the new one.
- Transfer the electrical connections one at a time (to ensure that they are not incorrectly re-fitted) to the new switch.
- Re-assemble in reverse order referring to the wiring diagrams (section 7) if necessary. Ensure that the pressure sensing lead is correctly connected to the low pressure connection on the pressure switch (marked P2).

8.8 LIMIT THERMOSTAT

The limit thermostat is situated on the top, R.H.S. of the heat exchanger (12 fig. 26).

- Remove the outer casing and the sealed chamber front panel as described in section 5.1.
- Without disconnecting the wires, unscrew the two limit thermostat fixing screws.
- Lift the thermostat and fixing screws out using the wires.
- Replace the thermostat and spread heat sink compound (supplied) over the base of the new one. Connect the wires, (polarity is immaterial) and position the screws in the flange and re-fit using the wires to position the thermostat before tightening the screws.
- Re-assemble in reverse order.

8.9 OVERHEAT THERMOSTAT

The overheat thermostat is situated on the flow pipe, below the sealed chamber (10 fig. 26).

- Remove the casing front panel as described in section 5.1.
- Disconnect the two overheat thermostat wires.
- Unscrew the two limit thermostat fixing screws and remove the thermostat.
- Replace the thermostat and spread heat sink compound (supplied) over the base of the new one.
- Re-assemble in reverse order. (Polarity is immaterial).

8.10 THERMISTOR

The thermistor is clipped to the flow pipe below the overheat thermostat.
The thermistor does not penetrate the waterways, therefore it is not necessary to drain the appliance.

- Remove the casing front panel as described in section 5.1.
- Remove the thermistor securing clip from the pipe.
- Pull off the thermistor connection plug, and release the thermistor from the clip.
- Replace the thermistor and re-assemble in reverse order using the heat sink compound supplied.

TABLE 9

Temperature (°C)	Resistance (Ω)
20	12,764
30	8,579
35	7,102
40	5,915
45	4,955
50	4,173
55	3,533
60	3,006
70	2,208
80	1,650

8.11 IGNITION CONTROL BOX

- Remove the casing front panel as described in section 5.1.
- Unscrew the single screw securing the plastic ignition control box to the gas valve and pull off the control box in a forwards direction.
- Unscrew the single screw securing the plastic control box cover to reveal the electrical connections.
- Transfer the electrical connectors and wires etc to the new PCB and re-assemble in reverse order.

8.12 DRIVER PCB

- Remove the casing front panel as described in section 5.1.
- Pivot the control box downwards, by removing the two screws.
- Open the plastic driver control box housing by removing the room thermostat cover (one screw) and the single central fixing screw then prising open the four locating tabs.
- Pull off the potentiometer knobs.
- Release the PCB (four screws), transfer all connections onto the new PCB, and re-assemble in reverse order.
- Re-set the CH burner pressure as described in section 4.3.

8.13 PUMP

- Remove the casing front panel as described in section 5.1.
- Unplug the electrical connection plug.
- Isolate the C.H. flow and return valves (17 - 18 fig. 2), and drain the appliance through the drain plug (13 fig 2).
- Unscrew both union connections.
- Replace the pump, and re-assemble in reverse order, using the new gaskets supplied with the pump. If the new pump is fitted with a speed adjuster, ensure that the speed is set to maximum.
- Refill and commission the system as described in section 4.1.

8.14 D.H.W. HEAT EXCHANGER

- Remove the casing front panel as described in section 5.1.
- Remove the gas valve (to improve access) as described in section 8.6.
- Isolate the C.H. flow and return valves, and the D.H.W. isolation valve (17 - 18 - 19 fig. 2).
- Drain the appliance through the drain plug (13 fig 2).
- Drain the D.H.W. circuit by opening any D.H.W. tap below the level of the boiler.
- Remove the two screws pivot the control box downwards.
- Disconnect all union connections to the D.H.W. heat exchanger and remove the heat exchanger.
- Fit new heat exchanger and re-assemble in reverse order using the new gaskets supplied with the heat exchanger.
- Refill and re-commission the system as described in section 4.1.

8.15 DIVERTOR VALVE - COMPLETE

- Remove the casing front panel as described in section 5.1.
- Remove the gas valve (to improve access) as described in section 8.6.
- Isolate the C.H. flow and return valves, and the D.H.W. isolation valve (17 - 18 - 19 fig. 2).
- Drain the appliance through the drain plug (13 fig 2)
- Drain the D.H.W. circuit by opening any D.H.W. tap below the level of the boiler.
- Remove the two screws pivot the control box downwards.
- Disconnect all union connections from the divertor valve. Withdraw the valve and remove the circlip securing the microswitch assembly.
- Transfer the electrical connections onto the new valve. If necessary. refer to the wiring diagrams in section 7.
- Re-assemble in reverse order, using the new gaskets supplied with the valve.
- Refill and re-commission the system as described in section 4.1.

8.16 DIVERTOR VALVE - MICROSWITCH ASSEMBLY

- Remove the casing front panel as described in section 5.1.
- Remove the two screws pivot the control box downwards.
- Pull out the microswitch circlip, and lift off the microswitch assembly.
- Transfer the electrical connections onto the new microswitch assembly. If necessary. refer to the wiring diagrams in section 7.
- Re-assemble in reverse order.

8.17 C.H. EXPANSION VESSEL

In the unlikely event of failure of the expansion vessel diaphragm it is acceptable to leave the vessel in position and to fit a replacement vessel (of similar or greater capacity) external to the appliance but as close as possible to the C.H. return. Alternatively the vessel can be replaced as follows. Note replacement is not recommended if a rear flue outlet is used or if the clearance above the casing is less than 300 mm.

- Remove the casing front panel as described in section 5.1.
- Isolate the C.H. flow and return valves (17 - 18 fig. 2), and drain the appliance through the drain plug (13 fig. 2).
- Unscrew the expansion vessel pipe union at its connec-

tion union.
- Remove the screw securing the expansion vessel bracket at the top, rear of the appliance.
- If a rear flue outlet is used it is necessary to disengage the flue and air duct temporarily. Refer to section 3.5.
- Remove the adjusting screws on the wall mounting bracket thereby allowing the appliance to move slightly forwards at the top.
- Lift the expansion vessel out of the appliance through the top.
- Replace the expansion vessel and re-assemble in reverse order. Re-pressurise and re-commission the system as described in section 4.1.

8.18 PRESSURE GAUGE

- Remove the casing front panel as described in section 5.1.
- Remove the two screws and pivot the control box downwards.
- Isolate the C.H. flow and return valves (17 - 18 fig. 2).
- Drain the appliance through the drain point (13 fig. 2).
- Unscrew the pressure sensor from the brass body near the drain point.
- Squeeze the gauge to depress the retaining clips, then ease the gauge forwards.
- Reassemble in reverse order. Refill and re-commission the system as described in section 4.1.

8.19 SAFETY VALVE

- Remove the casing front panel as described in section 5.1.
- Remove the two screws and pivot the control box downwards.
- Isolate the C.H. flow and return valves (17 - 18 fig. 2).
- Drain the appliance through the drain point (13 fig. 2)
- Unscrew the union supporting the outlet pipe from the valve, and remove the valve by unscrewing it from the brass housing.
- Fit the new safety valve using a suitable jointing compound and re-assemble in reverse order. Refill and re-commission the system as described in section 4.1.

8.20 AUTOMATIC AIR VENT

- Remove the casing front panel as described in section 5.1.
- Isolate the C.H. flow and return valves (17 - 18 fig. 2).
- Drain the appliance through the drain point (13 fig. 2).
- Unscrew the automatic air vent.
- Fit the new automatic air vent using a suitable jointing compound and re-assemble in reverse order. Refill and re-commission the system as described in section 4.1.

8.21 TIME CLOCK

- Remove the casing front panel as described in section 5.1.
- Remove the two screws and pivot the control box downwards.
- Open the plastic driver control box housing by removing the room thermostat cover (one screw) and the single central fixing screw then prising open the four locating tabs.
- Pull off the electrical connections at the back of the clock.
- Remove the four screws securing the plastic frame of the time clock to the fascia panel.
- Remove the plastic frame and pull out the time clock.
- Re-assemble in reverse order and test the operation of the new clock.

Set it to the desired settings as described in section 4.3

9 EXPLODED VIEWS

9.1 DIVERTOR VALVE

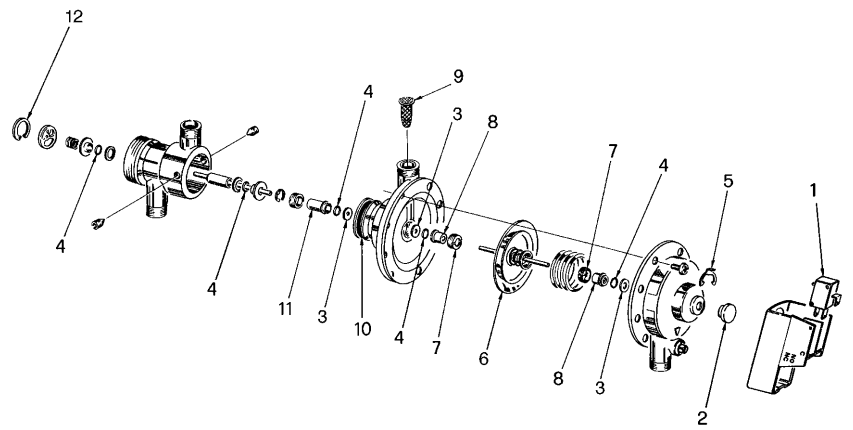

Fig. 29

Position	Code	Description
1	6150700	Divertor valve microswitch
2	6219701	Cap MPMV 3310 for microswitch
3	6223800	Washer MPMV 3318
4	6220601	O-ring R1 MPMV 3325
5	6218500	Clip Ø 17 for diverting valve
6	6153101	Diaphragm assembly for divertor valve

Position	Code	Description
7	6231201	Brass ring nut MPMV 3320
8	6223902	Teflon short spacer MPMV 3315
9	6222000	D.H.W. filter MPMV 3326
10	6220602	O-ring 4093 MPMV 18
11	6223903	Teflon long spacer MPMV 3316
12	6153401	Snap ring J26 MPMV 3323

9.2 HYDRAULIC CIRCUIT

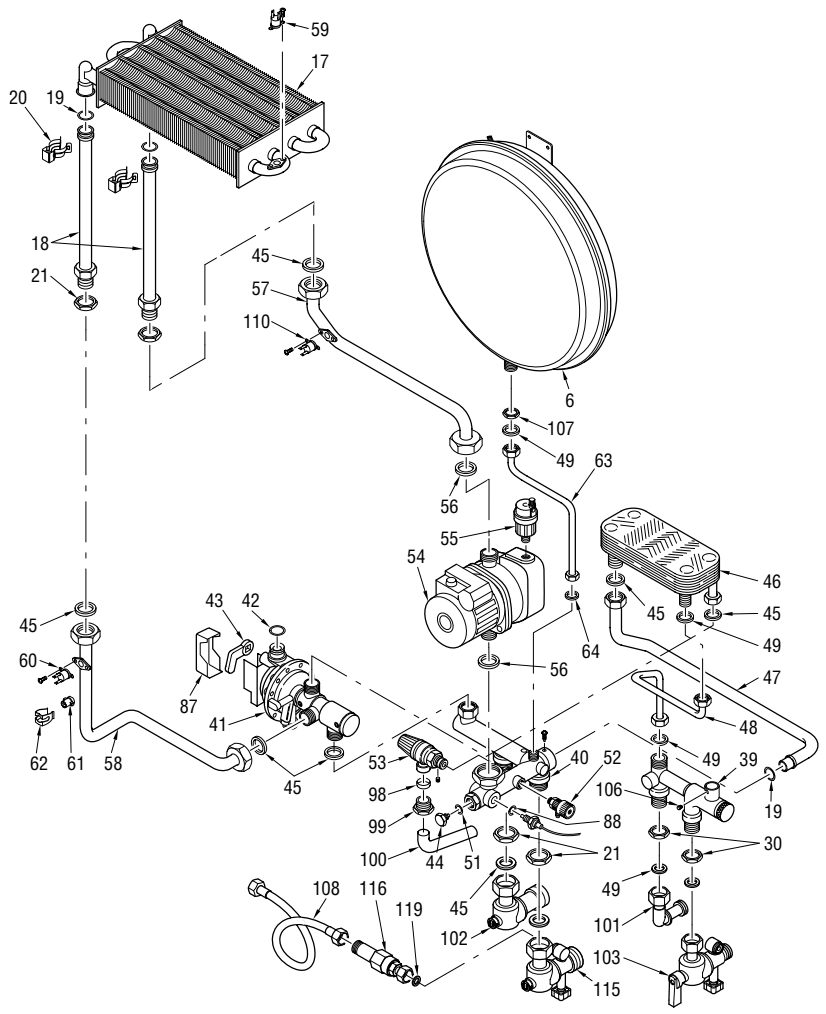

Fig. 29/a

Position		Code	Description	Model
6	•	5139110	Expansion vessel l.7 - 1/2" M	90
6 A	•	5187700	Expansion vessel l.10 - 1/2" M	105
17	•	6174221	Heat exchanger PR20326001	90
17 A	•	6174223	Heat exchanger PR24326004	105
18	•	6265101	Heat exchanger inlet/outlet pipe	
19	•	6226412	O-ring 3068	
20	•	6226601	Spring for heat exchanger connector	
21		6146302	Brass nut 3/4"	
30		6146301	Brass nut 1/2"	
39		6265701	D.H.W. inlet/outlet manifold	
40		6265801	C.H. flow/return manifold	
41	•	6102806	Divertor valve	
42	•	6226417	O-ring 3043	
43	•	6275900	Restrictor lever	
44		6147403	Plug for water pressure switch hole	
45		2030228	Gasket Ø 17x24x2	
46	•	6265600	Plate-type heat exchanger	
47		6264900	D.H.W. exchanger-C.H. manifold pipe	
48		6265000	D.H.W. exchanger-D.H.W. manifold pipe	
49		2030227	Gasket Ø 12x18x2	
51	•	6226403	O-ring 2031	
52		6017211	Manual air vent 1/4"	
53	•	6040201	Pressure relief valve	
54	•	6124803	Myson CP51AS pump 1"	90
54 A		6124810	Myson CP61AS pump 1"	105
55	•	6013100	Automatic air vent 3/8"	
56	•	2030229	Gasket Ø 22x30x2	

Position		Code	Description	Model
57		6264812	C.H. return pipe	90
57 A		6264822	C.H. return pipe	105
58		6264712	C.H. flow pipe	90
58 A		6264721	C.H. flow pipe	105
59	•	6146700	Limit stat auto reset	
60	•	6146701	100°C safety stat	
61	•	6231352	Temperature sensor	
62	•	6272500	Temperature sensor fixing spring	
63		6227621	Pipe connecting expansion vessel	
64		2030226	Gasket Ø 10,2x14,8x2	
87		6175400	Cover for micro switches	
88	•	6226411	O-ring 2015	
98		6100202	Ogive for pipe Ø 15	
99		6168401	Locking nut for pipe Ø 15	
100		6157607	Pressure relief valve drain pipe	
101		6142341	Quarter bend 1/2" x 15	
102		6177511	Ball cock 3/4" x 22	
103		6177513	Ball cock 1/2" x 15	
106		2002302	Hex. socket headless screw M4x6	
107		6146330	Nut 1/2" for expansion vessel	
108		6017403	Flexible pipe	
110		6146702	Frost stat	
115		6177512	Ball cock 3/4" x 22	
116		6078612	Non-return valve	
119		2030239	Gasket Ø 6x11x2	

• Recommended stock parts

9.3 COMBUSTION CIRCUIT

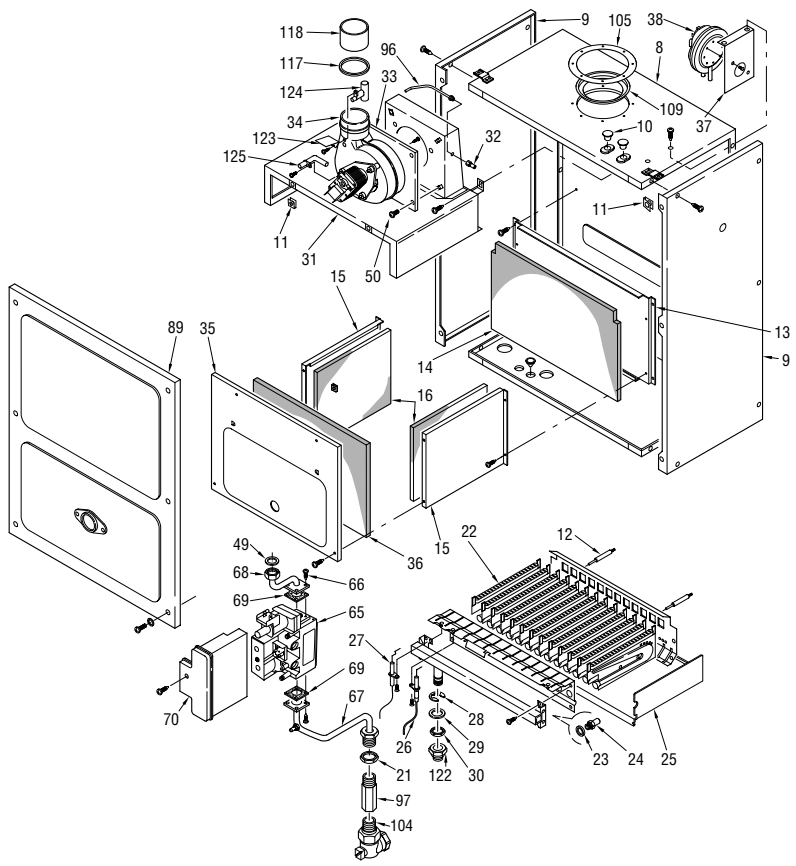

Fig. 29/b

Position	Code	Description	Model
8	6266001	Sealed chamber rear panel	90
8 A	6266020	Sealed chamber rear panel	105
9	6266110	Sealed chamber side panel	
10	6119313	Plastic cap	
11	• 2013302	Fastener for self tapping screw	
12	6223200	Burner centering pin	
13	6266601	Combustion chamber rear panel	90
13 A	6266620	Combustion chamber rear panel	105
14	6139721	Combustion chamber rear insulation	90
14 A	6139722	Combustion chamber rear insulation	105
15	6139410	Combustion chamber side panel	
16	6139720	Combustion chamber side insulation	
21	6146302	Brass nut 3/4"	
22	5172700	Main burner assembly	90
22 A	5172720	Main burner assembly	105
23	6022004	Copper washer Ø 6	
24	6154402	Main burner nozzle NP 130 natural gas	
24 A	6154401	Main burner nozzle NP 75 M6 LPG	
25	6175103	Protecting shield	90
25 A	6175104	Protecting shield	105
26	• 6235920	Ignition electrode	90
26 A	6235927	Ignition electrode	105
27	• 6235916	Ionisation electrode	
28	2034000	Locking ring	90
29	2030015	Plane washer Ø 21x37	90
30	6146301	Brass nut 1/2"	
31	5174510	Smoke chamber assembly	90
31 A	5174511	Smoke chamber assembly	105
32	6235800	Venturi pressure nipple	90
33	6229209	Fan mounting plate	90
33 A	6229210	Fan mounting plate	105
34	• 6225615	Fan	90
34 A	• 6225613	Fan with venturi	105

Position	Code	Description	Model
35	6139606	Combustion chamber front panel	90
35 A	6139608	Combustion chamber front panel	105
36	6139754	Combustion chamber front insulation	90
36 A	6139756	Combustion chamber front insulation	105
37	6229101	Smoke pressure switch bracket	
38	• 6225707	Air pressure switch	90
38 A	6225712	Air pressure switch	105
49	2030227	Gasket Ø 12x18x2	
50	2000715	Screw TCB M4x10 AISI 304	
65	• 6243802	SIT gas valve type Tandem 837	90
65 A	6243810	SIT gas valve type 845 SIGMA	105
66	2000716	Screw T.C.B. M4x8	90
67	6226832	Gas inlet pipe	90
67 A	6226849	Gas inlet pipe	105
68	6226932	Pipe connecting gas valve-main burner	90
68 A	6226944	Pipe connecting gas valve-main burner	105
69	• 6162401	Square gasket	90
70	• 6210203	Control box SIT 503	90
70 A	6210205	Control box SIT 537	105
89	6228871	Sealed chamber front panel	90
89 A	6228880	Sealed chamber front panel	105
96	6263903	Fan pressure test point	90
97	6070808	Extension MF 1/2"	
104	• 6177504	Gas cock 1/2" x 1/2"	
105	6028702	Gasket Ø 95x125x2	
109	6028620	Air diaphragm Ø 81	
117	6035906	Washer Ø 56,3x60	105
118	6231402	Silicon rubber flue ring	105
122	6070807	Extension MF 1/2"	105
123	6215109	Pressure switch sensor protect. shield	105
124	6223350	Venturi for fan	105
125	6263902	Fan pressure test point	105

• Recommended stock parts

9.4 STRUCTURAL COMPONENTS AND CONTROL & REGULATIONS

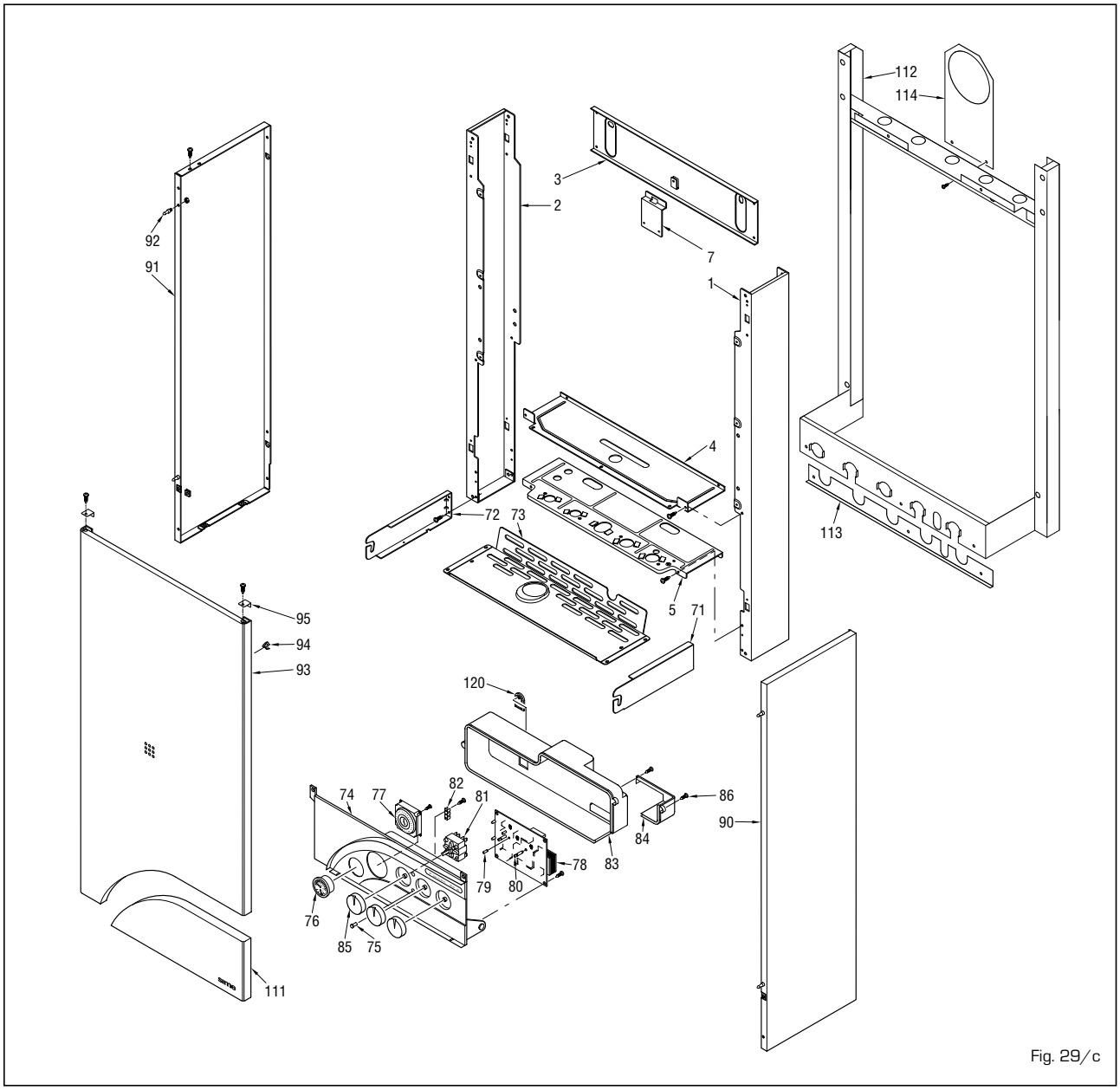

Fig. 29/c

Position	Code	Description	Model
1	6138521	Right hand side frame part	
2	6138621	Left hand side frame part	
3	6138700	Frame assembly upper support	90
3 A	6138701	Frame assembly upper support	105
4	6255420	Expansion vessel lower support	90
4 A	6255421	Expansion vessel lower support	105
5	6138856	Frame assembly lower side	90
5 A	6138857	Frame assembly lower side	105
7	6140004	Expansion vessel fixing bracket	90
7 A	6140005	Expansion vessel fixing bracket	105
71	6250010	Control panel R.H. side supp. bracket	
72	6250110	Control panel L.H. side supp. bracket	
73	6219571	Lower closing panel	
74	6272910	Control panel	
75	6044022	Gem	
76	6217003	Temperature and pressure gauge	
77	• 6197707	Time programmer	
78	• 6230679	Control board	
79	• 6201501	Trimmer spindle Ø 5	
80	• 6201502	Trimmer spindle Ø 6	

Position	Code	Description	Model
81	• 6260701	Rotary switch	
82	2211610	Earth faston	
83	6273010	Control panel protecting cover	
84	6273110	Room stat connection cover	
85	6230921	Knob Ø 40	
86	2005101	Screw TCB 4x10 Zn	
90	6271250	Casing right hand side panel	90
90 A	6274050	Casing right hand side panel	105
91	6271150	Casing left hand side panel	90
91 A	6273950	Casing left hand side panel	105
92	2003000	Pin M5 Zn	
93	6273510	Casing front panel	
94	2015000	Spring clip M0/A8	
95	6250300	Front panel fixing bracket	
111	6273300	Flap door	
112	5185210	Boiler mounting frame	90
112 A	5185211	Boiler mounting frame	105
113	6280600	Isolation valves fixing bracket	
114	6279500	Flue template	

• Recommended stock parts

Cod. 6274207A - 02/11 - Documentation Dpt.

Sime Ltd
1a Blue Ridge Park
Thunderhead Ridge
Glasshoughton, Castleford, WF10 4UA

Phone: 0845 9011114
Fax: 0845 9011115

www.sime.ltd.uk
Email: enquiries@sime.ltd.uk