spares & parts online
IBASIS.co.uk©

ECOMFORT PLUS

Installation and servicing instructions

benchmark
COLLECTIVE MARK
THE MARK OF QUALITY FOR THE INSTALLATION, COMMISSIONING AND SERVICING OF DOMESTIC HEATING AND HOT WATER SYSTEMS

WRAS APPROVED PRODUCT

sime®

All descriptions and illustrations provided in this manual have been carefully prepared but we reserve the right to make changes and improvements in our products that may affect the accuracy of the information contained in this manual.

Code Of Practice

For the installation, commissioning and servicing of domestic heating and hot water products

Benchmark places responsibilities on both manufacturers and installers.* The purpose is to ensure that customers** are provided with the correct equipment for their needs, that it is installed, commissioned and serviced in accordance with the manufacturer's instructions by competent persons and that it meets the requirements of the appropriate Building Regulations. Installers are required to carry out work in accordance with the following:

Standards of Work

- Be competent and qualified to undertake the work required.
- Install, commission, service and use products in accordance with the manufacturer's instructions provided.
- Ensure that where there is responsibility for design work, the installation is correctly sized and fit for purpose.
- Meet the requirements of the appropriate Building Regulations. Where this involves notifiable work be a member of a Competent Persons Scheme or confirm that the customer has notified Local Authority Building Control (LABC), prior to work commencing.
- Complete all relevant sections of the Benchmark Checklist/Service Record when carrying out commissioning or servicing of a product or system.
- Ensure that the product or system is left in a safe condition and, whenever possible, in good working order.
- Highlight to the customer any remedial or improvement work identified during the course of commissioning or servicing work.
- Refer to the manufacturer's helpline where assistance is needed.
- Report product faults and concerns to the manufacturer in a timely manner.

Customer Service

- Show the customer any identity card that is relevant to the work being carried out prior to commencement or on request.
- Give a full and clear explanation/demonstration of the product or system and its operation to the customer.
- Hand over the manufacturer's instructions, including the Benchmark Checklist, to the customer on completion of an installation.
- Obtain the customer's signature, on the Benchmark Checklist, to confirm satisfactory demonstration and receipt of manufacturer's instructions.
- Advise the customer that regular product servicing is needed, in line with manufacturers' recommendations, to ensure that safety and efficiency is maintained.
- Respond promptly to calls from a customer following completion of work, providing advice and assistance by phone and, if necessary, visiting the customer.
- Rectify any installation problems at no cost to the customer during the installer's guarantee period.

benchmark
COLLECTIVE MARK
THE MARK OF QUALITY FOR THE INSTALLATION, COMMISSIONING AND SERVICING OF DOMESTIC HEATING AND HOT WATER SYSTEMS

*The use of the word "installer" is not limited to installation itself and covers those carrying out installation, commissioning and/or servicing of heating and hot water products, or the use of supporting products (such as water treatment or test equipment).
**Customer includes householders, landlords and tenants.

© Heating and Hotwater Industry Council (HHIC)

The Benchmark Scheme

Sime Ltd is a licensed member of the Benchmark Scheme which aims to improve the standards of installation and commissioning of domestic heating and hot water systems in the UK and to encourage regular servicing to optimise safety, efficiency and performance.

Benchmark is managed and promoted by the Heating and Hotwater Industry Council.
For more information visit www.centralheating.co.uk

IPX4D

Ecomfort System Plus 25 HE:
Gas Council number 41-283-10

Ecomfort Plus 25 HE:
Gas Council number 47-283-13

Ecomfort Plus 30 HE:
Gas Council number 47-283-14

These appliances comply with the S.E.D.B.U.K. scheme, band "A"

CONTENTS

1	**DESCRIPTION OF THE BOILER**	pag. 6
2	**INSTALLATION**	pag. 10
3	**CHARACTERISTICS**	pag. 18
4	**USE AND MAINTENANCE (including BENCHMARK)**	pag. 21
5	**FAULT FINDING**	pag. 26
6	**REPLACEMENT OF PARTS**	pag. 29
7	**EXPLODED VIEWS**	pag. 31

Important Information
IT IS A STATUTORY REQUIREMENT THAT ALL GAS APPLIANCES ARE INSTALLED BY COMPETENT PERSONS, IN ACCORDANCE WITH THE GAS SAFETY (INSTALLATION AND USE) REGULATIONS (CURRENT EDITION). The manufacturer's instructions must not be taken as overriding any statutory requirements, and failure to comply with these regulations may lead to prosecution.

No modifications to the appliance should be made unless they are fully approved by the manufacturer.

GAS LEAKS: DO NOT OPERATE ANY ELECTRICAL SWITCH, OR USE A NAKED FLAME. TURN OFF THE GAS SUPPLY AND VENTILATE THE AREA BY OPENING DOORS AND WINDOWS CONTACT THE GAS EMERGENCY SERVICE ON 0800111999.

benchmark
COLLECTIVE MARK
THE MARK OF QUALITY FOR THE INSTALLATION, COMMISSIONING AND SERVICING OF DOMESTIC HEATING AND HOT WATER SYSTEMS

Please refer to commissioning instructions for filling in the checklist of this installation guide.

Note: All Gas Safe registered installers carry a ID Card.
You can check your installer is Gas Safe Registered by calling 0800 408 5577

SIME COMBINATION BOILERS
Installer checklist

Please remember to carry out the following checks after installation. This will achieve complete customer satisfaction, and avoid unnecessary service calls. A charge will be made for a service visit where the fault is not due to a manufacturing defect.

- Has a correct by-pass been fitted and adjusted?
- Has the system and boiler been flushed?
- Is the system and boiler full of water, and the correct pressure showing on the pressure gauge?
- Is the Auto Air Vent open?
- **Has the pump been rotated manually?**
- Is the gas supply working pressure correct?
- Is the boiler wired correctly? (See installation manual).
- **Has the D.H.W. flow rate been set to the customer requirements?**
- Has the customer been fully advised on the correct use of the boiler, system and controls?
- Has the Benchmark Checklist in the use and maintenance section of this manual been completed?
- **Has the Aquaguard Filter been cleaned (see 4.9)?**
- **Has the condensate trap been filled (see section 2)?**

1 DESCRIPTION OF THE BOILER

1.1 INTRODUCTION

"ECOMFORT PLUS" is a boiler that has a condensing heat exchanger downstream from the fan to allow the heat contained in exhaust fumes to be recovered.
The boiler is equipped as standard with frost protection and circulating pump anti-jamming system.
The instructions given in this manual are provided to ensure proper installation and correct operation of the appliance.

1.2 DIMENSIONS

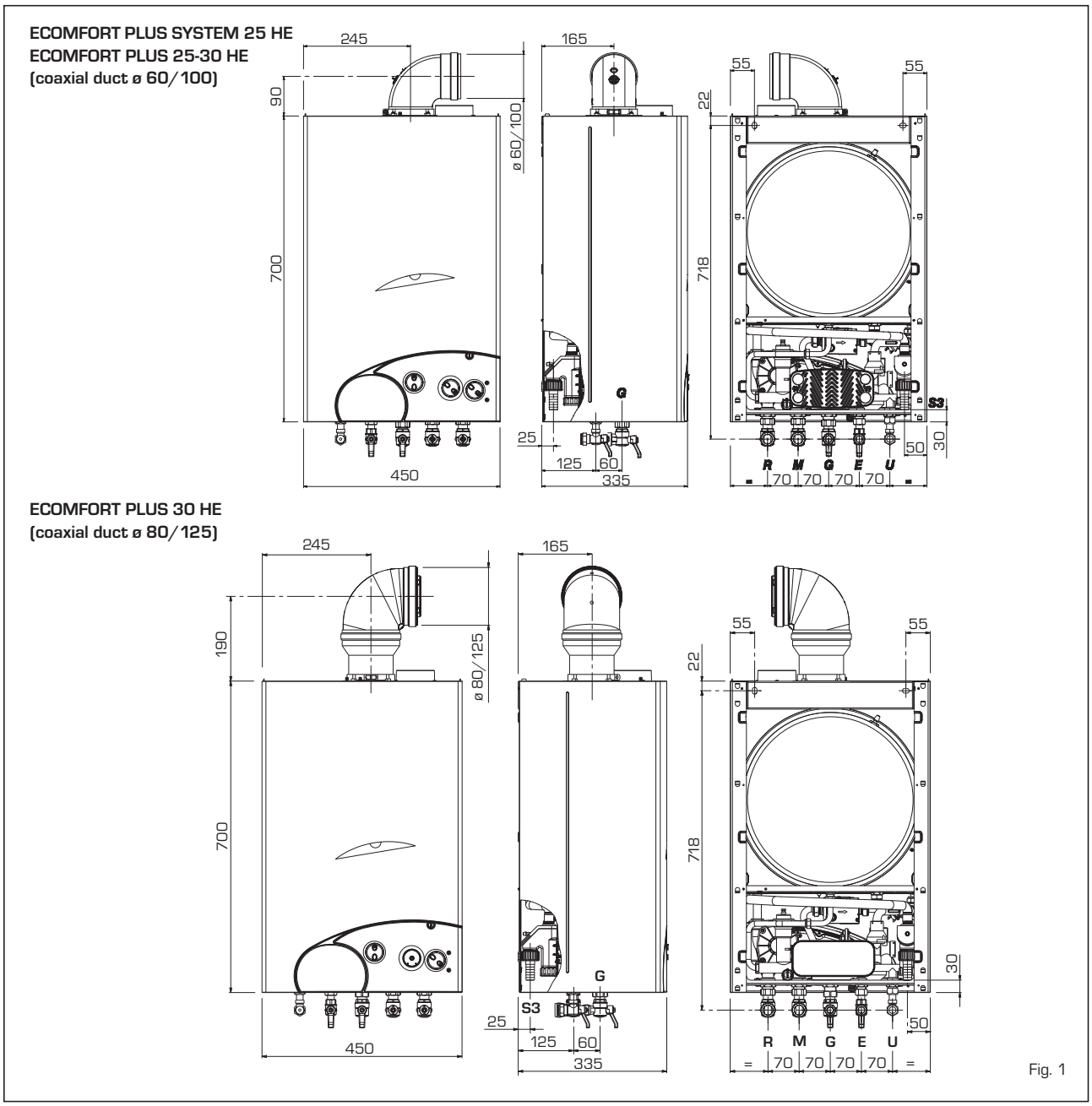

Fig. 1

TABLE 1 - Connections "ECOMFORT SYSTEM PLUS 25 HE"

R	**C.H. return**	22 mm	Compression
M	**C.H. flow**	22 mm	Compression
G	**Gas connection**	15 mm	Compression
S3	**Condensation outlet ø 20**		

TABLE 1/a - Connections "ECOMFORT PLUS 25 HE - 30 HE"

R	**C.H. return**	22 mm	Compression
M	**C.H. flow**	22 mm	Compression
G	**Gas connection**	15 mm	Compression
E	**D.H.W. inlet**	15 mm	Compression
U	**D.H.W. outlet**	15 mm	Compression
S3	**Condensation outlet ø 20**		

TABLE 2 - Minimum clearances

	For ventilation	For servicing
ABOVE THE APPLIANCE CASING	400 mm	300 mm
AT THE R.H.S.	15 mm	15 mm
AT THE L.H.S.	15 mm	15 mm
BELOW THE APPLIANCE CASING	200 mm	200 mm
IN FRONT OF THE APPLIANCE	100 mm	500 mm

1.3 TECHNICAL FEATURES

ECOMFORT PLUS		SYSTEM 25 HE	25 HE	30 HE
Heat output nominal (80-60°C)	kW	25.0	25.0	29.0
Heat output nominal (50-30°C)	kW	27.2	27.2	31.5
Heat output minimum (80-60°C)	kW	9.6	9.6	11.3
Heat output minimum (50-30°C)	kW	10.2	10.2	12.0
Heat input nominal	kW	25.5	25.5	29.5
Heat input minimum	kW	10.2	10.2	12.0
Efficiency min./nom. output (80-60°C)	%	94.2/98.3	94.2/98.3	94.2/98.3
Efficiency min./nom. output (50-30°C)	%	100.0/106.8	100.0/106.8	100.0/106.8
Seasonal efficiency rating (SEDBUK)		(A)	(A)	(A)
Termal efficiency (CEE 92/42 directive)		★★★★	★★★★	★★★★
Class NOx		3	3	3
Smokes temperature maximum (80-60°C)	°C	60	60	60
Smokes temperature minimum (80-60°C)	°C	60	60	60
Smokes temperature maximum (50-30°C)	°C	40	40	40
Smokes temperature minimum (50-30°C)	°C	40	40	40
Smokes flow	kg/h	58.0	58.0	61.0
CO_2 maximum/minimum G20	%	7.0/2.5	7.0/2.5	7.5/2.8
CO_2 maximum/minimum G30/G31	%	8.0/2.8	8.0/2.8	8.8/3.3
Adsorbed power consumption	W	150	150	160
Electrical protection grade	IP	X4D	X4D	X4D
CE certification	n°	1312BT5040	1312BT5040	1312BT5040
Category		II_{2H3+}	II_{2H3+}	II_{2H3+}
Type		$B_{22P-52P}/C_{12-32-42-52-82}$	$B_{22P-52P}/C_{12-32-42-52-82}$	$B_{22P-52P}/C_{12-32-42-52-82}$
WEIGHT	kg	41	43	43
CENTRAL HEATING				
Maximum water head	bar	3	3	3
Maximum temperature	°C	85	85	85
Water content boiler	l	5.0	5.0	5.0
C.H. setting range	°C	30/80	30/80	30/80
Expansion vessel capacity	l	8	8	8
Expansion vessel pressure	bar	1	1	1
DOMESTIC HOT WATER				
Minimum/Maximum pressure	bar	-	0.2/7.0	0.2/7.0
D.H.W. flow rate (EN 625)	l/min	-	11.7	13.6
Continuous D.H.W. flow rate Δt 30°C	l/min	-	11.9	13.8
Continuous D.H.W. flow rate Δt 35°C	l/min	-	10.1	11.8
D.H.W. setting range	°C	-	30/60	30/60
GAS PRESSURE AND NOZZLES				
Gas supply pressure G20	mbar	20	20	20
Gas supply pressure G30	mbar	28-30	28-30	28-30
Gas supply pressure G31	mbar	37	37	37
Nozzles quantity	n°	12	12	14
Nozzles diameter G20	ø	1.30	1.30	1.30
Nozzles diameter G30/G31	ø	0.77	0.77	0.77
Burner gas pressure min./max. G20	mbar	2.0/11.5	2.0/11.5	2.1/11.7
Burner gas pressure min./max. G30	mbar	4.8/28.5	4.8/28.5	5.0/28.5
Burner gas pressure min./max. G31	mbar	4.8/36.5	4.8/36.5	5.0/36.5
C.H gas consumption G20	m^3/h	2.70	2.70	3.12
C.H. gas consumption G30/G31	kg/h	2.01	2.01	2.33

1.4 FUNCTIONAL DIAGRAM

ECOMFORT SYSTEM PLUS 25 HE

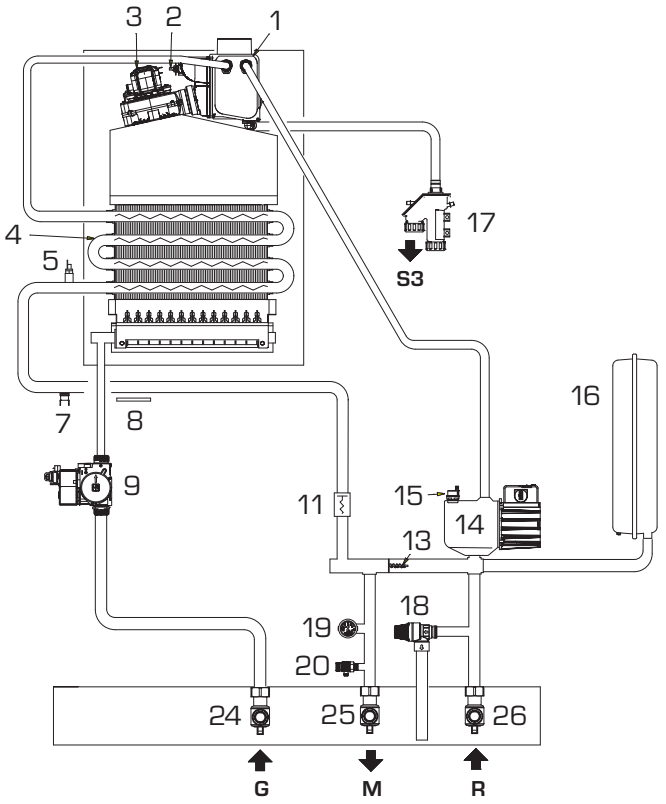

ECOMFORT PLUS 25 - 30 HE

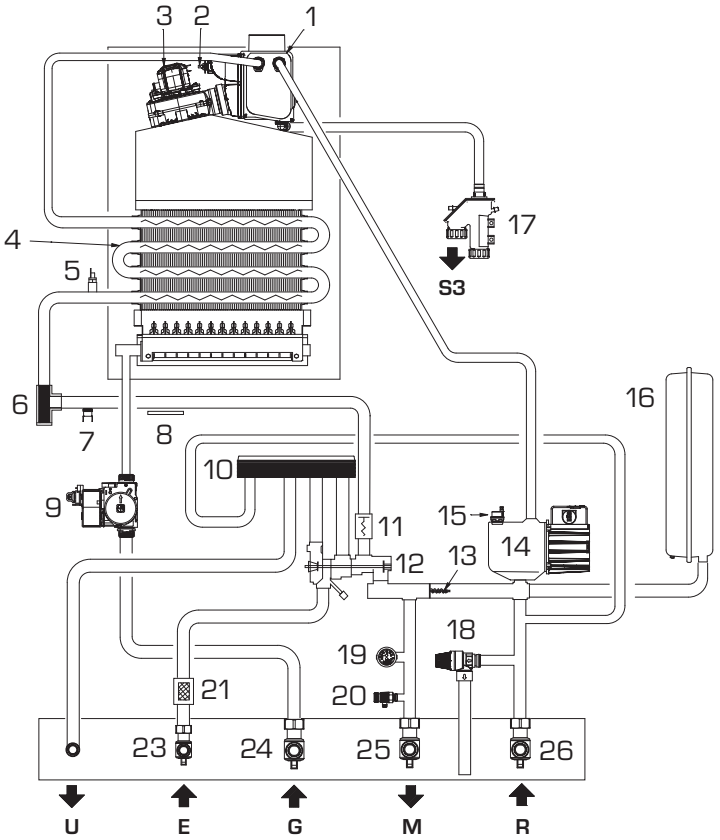

KEY

1 Post-condenser
2 Smoke stat 95°
3 Fan
4 Main exchanger
5 SM sensor (thermister)
6 Aqua Guard Filter System
7 Safety stat 100°
8 Thermometer sensor
9 Gas valve
10 D.H.W. exchanger
11 Water flow switch
12 Divertor valve
13 Automatic by-pass
14 Circulating pump
15 Auto air vent
16 Expansion vessel
17 Condensation water trap
18 Safety valve
19 Temperature/pressure gauge
20 Boiler drain
21 D.H.W. filter
23 D.H.W. inlet cock
24 Gas cock
25 C.H. flow cock
26 C.H. return cock

R C.H. return
M C.H. flow
G Gas connection
E D.H.W. inlet
U D.H.W. outlet
S3 Condensation outlet ø 20

Fig. 2

1.5 MAIN COMPONENTS

ECOMFORT SYSTEM PLUS 25 HE

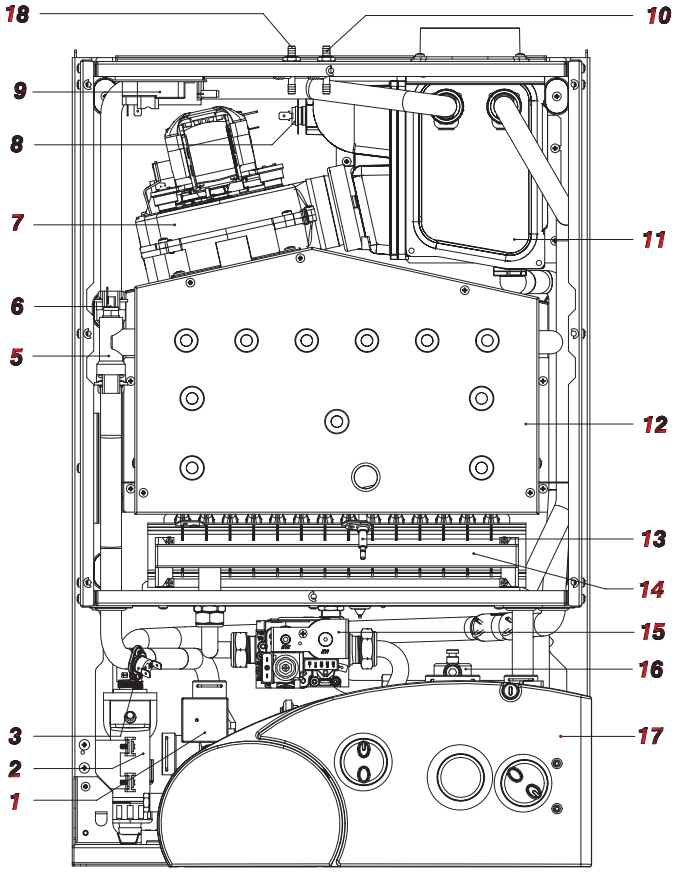

ECOMFORT PLUS 25 - 30 HE

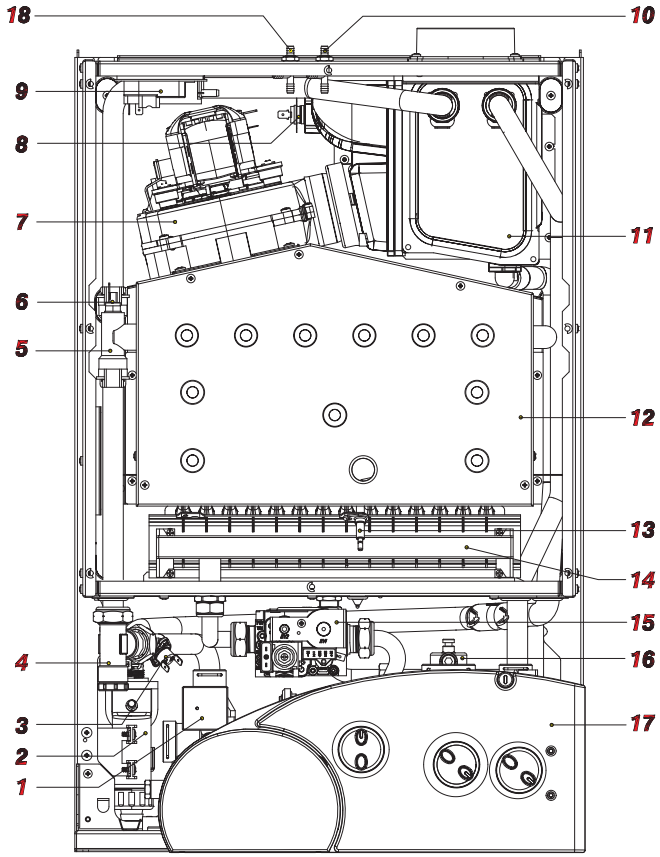

KEY

1 Water flow switch
2 Water trap
3 Safety stat 100°
4 Aqua Guard Filter System
5 Main exchanger
6 SM sensor (thermister)
7 Fan
8 Smoke stat 95°
9 Smoke pressure switch
10 Positive test point
11 Post-condenser
12 Combustion chamber
13 Ignition/ionization electrode
14 Burner
15 Gas valve
16 Automatic air vent
17 Control panel
18 Negative test point

Fig. 3

2 INSTALLATION

The boiler must be installed in a fixed location and only by specialized and qualified person in compliance with all instructions contained in this manual. The boiler should be installed in accordance with the Gas Safety Regulations.
It is important that the condensate trap be filled prior to operating the boiler. The trap can be filled by pouring water carefully into the inner flue connection prior to installation of the flue. Care should be taken not to allow any water to enter the outer flue.

2.1 VENTILATION REQUIREMENTS

Detailled recommendations for air supply are given in BS5440:2. The following notes are for general guidance:

- It is not necessary to have a purpose provided air vent in the room or compartment in which the appliance is installed.

2.2 FIXING THE WALL MOUNTING BRACKET

- Mark the position of the two wall mounting bracket fixing holes and the flue/air duct hole on the appropriate wall(s).
- Drill the top two fixing holes using a 10 mm masonry drill and fit the plastic plugs provided.
- Cut the hole in the wall for the flue/air duct. The diameter should not be less than 100 mm (4 in) and must be horizontal. If the hole is not accessible from the outside of the building, its minimum diameter should be sufficient to allow the insertion of the wall liner (130 mm - 5 $^{1}/_{4}$ in diameter) which will be sealed with mortar.
- Accurately measure the wall thickness, and note this dimension for later use.
- Secure the wall mounting bracket in position using the screws provided. Ensure that it is the correct way up, as indicated in fig. 4.

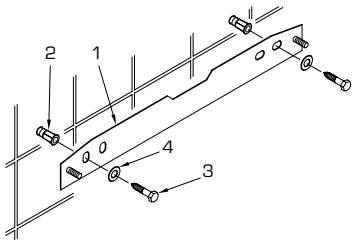

KEY
1 Wall mounting bracket
2 Plastic wall plug (2 Off)
3 Woodscrew (2 Off)
4 Washer (2 Off)

Fig. 4

2.3 CONNECTING UP SYSTEM

Before proceeding to connect up the boiler, you are recommended to flush out the system in order to eliminate any foreign bodies that might be detrimental to the operating efficiency of the appliance. When making the hydraulic connections, make sure that the clearances indicated in fig. 1 are respected. To facilitate the hydraulic connections the boiler is equipped with a valve pack code 5184817 complete with instructions sheet.
A safety valve set at 3 bar is fitted to the appliance, the discharge pipe provided should be extended to terminate safely away from the appliance and where a discharge would not cause damage to persons or property but would be detected. The pipe should be a minimum of 15 mm Ø and should be able to withstand boiling water, any should avoid sharp corners or upward pipe runs where water may be retained.

Gas Connection: The gas connection must be made using seamless steel or copper pipe, galvanized and with threaded joints provided with gaskets, excluding three-piece connections, except for initial and end connections. Where the piping has to pass through walls, a suitable insulating sleeve must be provided. When sizing gas piping, from the meter to the boiler, take into account both the volume flow rates (consumption) in m^3/h and the relative density of the gas in question. The sections of the piping making up the system must be such as to guarantee a supply of gas sufficient to cover the maximum demand, limiting pressure loss between the gas meter and any apparatus being used to not greater than 1.0 mbar for family II gases (natural gas). An adhesive data badge is sited inside the front panel; it contains all the technical data identifying the boiler and the type of gas for which the boiler is arranged.

2.3.1 Connection of condensation water trap (fig. 4/a)

To ensure safe disposal of the condensate produced by the flue gases, reference should be made to BS6798:2000. The boiler incorporates a condensate trap which has a seal of 75mm, therefore no additional trap is required. The condensate should ideally be discharged internally into an internal waste pipe(washing machine/sink waste) or a soil pipe to avoid the risk of freezing. External pipe runs should be avoided, but if it is necessary, the pipework should be at least 32mm and protected from the risc of freezing with a waterproof insulation and the length kept to a minimum and not exceeding 3 m. termination should be into an external gully or purpose made soakaway.
NOTE: All pipework must have a continuous fall from the boiler and must be resistant to corrosion by condensate, copper or steel is NOT suitable. It should be noted that the connection of a condensate pipe to a drain may be subject to local building control requirements.

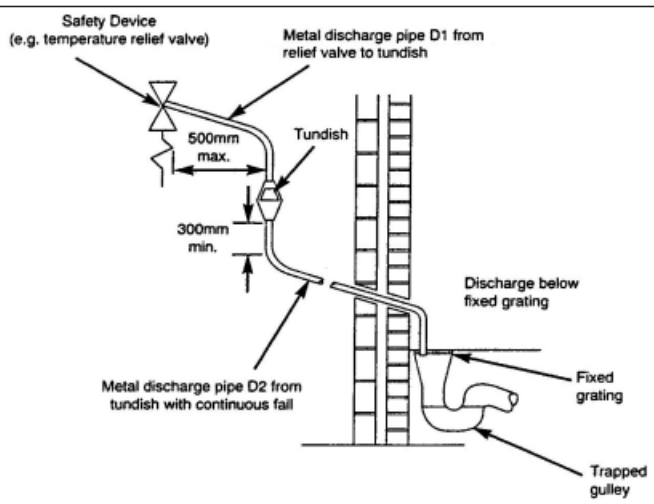

Valve outlet size	Minimum size of discharge pipe D1	Minimum size of discharge pipe D2 from tundish	Maximum resistance allowed, expressed as a length of straight pipe (i.e. no elbows or bends)	Resistance created by each elbow or bend
G $^{1}/_{2}$	15mm	22mm 28mm 35mm	up to 9m up to 18m up to 27m	0.8m 1.0m 1.4m
G $^{3}/_{4}$	22mm	28mm 35mm 42mm	up to 9m up to 18m up to 27m	1.0m 1.4m 1.7m
G 1	28mm	35mm 42mm 54mm	up to 9m up to 18m up to 27m	1.4m 1.7m 2.3m

Fig. 4/a

2.3.2 Requirements for sealed water systems

The heating system design should be based on the following information:

a) The available pump head is given in fig. 16.
b) The burner starts when the C.H. flow reaches 400÷450 l/h. This safety condition is ensured by the flow switch.
c) The appliance is equipped with an internal by-pass that operates with system heads (H) greater than 3 m. The maximum flow through the by-pass is about 300 l/h. If thermostatic radiator valves are to be installed, at least one radiator should be without a thermostatic valve (usually the bathroom radiator).
d) A sealed system must only be filled by a competent person using one of the approved methods shown in fig. 4/b. The system design should incorporate the connections appropriate to one of these methods.

ALTERNATIVE METHODS OF FILLING A SEALED SYSTEM

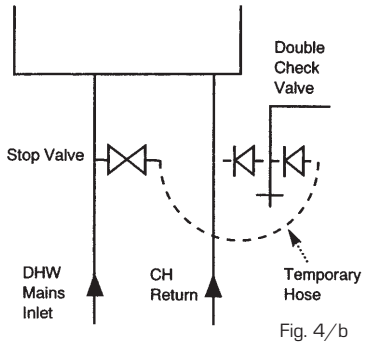

Fig. 4/b

2.4 CHARACTERISTICS OF FEEDWATER

- All recirculatory systems will be subject to corrosion unless an appropriate water treatment is applied. This means that the efficiency of the system will deteriorate as corrosion sludge accumulates within the system, risking damage to pump and valves, boiler noise and circulation problems.
- For optimum performance after installation this boiler and its associated central heating system must be flushed in accordance with the guidelines given in BS 7593 "Treatment of water in domestic hot water central heating systems".
- This must involve the use of a proprietary cleanser, such as Sentinel X300 or X400, or Fernox Superfloc. Full instructions are supplied with the products, but for immediate information please contact GE Betz (0151 420 9563) or Fernox (01799 550 811) directly.
- For long term protection against corrosion and scale, after flushing it is recommended that an inhibitor such as Sentinel X100, or Fernox MB-1 or Copal is dosed in accordance with the guidelines given in BS 7593.
  Failure to flush and add inhibitor to the system may invalidate the appliance warranty.
- It is important to check the inhibitor concentration after installation, system modification and at every service in accordance with the manufacturer's instructions. (Test kits are available from inhibitor stockists).
- At every service the Aquaguard Filter (4.9) should be checked and cleaned.

2.5 COAXIAL DUCT ø 60/100

The air inlet-smoke outlet assembly, code 8096250, is included in the standard supply of the appliance complete with mounting instructions.
NOTE: to use only special accessories for condensing boilers.

2.5.1 Coaxial flue diaphragm

The boiler **"25 HE"** is supplied of series with diaphragm ø 87.5 to mount like indicated in figure (fig. 4/c).
ATTENTION: the diaphragm should be used only when the length of the coaxial duct is below 1,5 m (only for "25 HE" model).

ONLY FOR "25 HE" MODEL

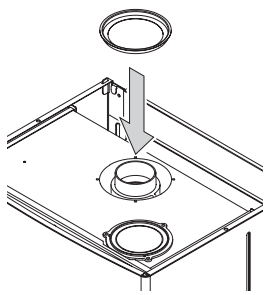

Fig. 4/c

2.5.2 Coaxial duct accessories

The accessories to be used for this type of installation and some of the connecting systems that may be adopted are illustrated in fig. 5.
With the pipe bend included in the kit, the maximum length of the piping should not

KEY
1a-b Coaxial duct kit code 8096250
2 Extension L. 1000 code 8096150
3 Vertical extension L. 140 with take-off point code 8086950
4 a 90° additional bend code 8095850
4 b 45° additional bend code 8095950

NOTE: Place the duct horizontally.

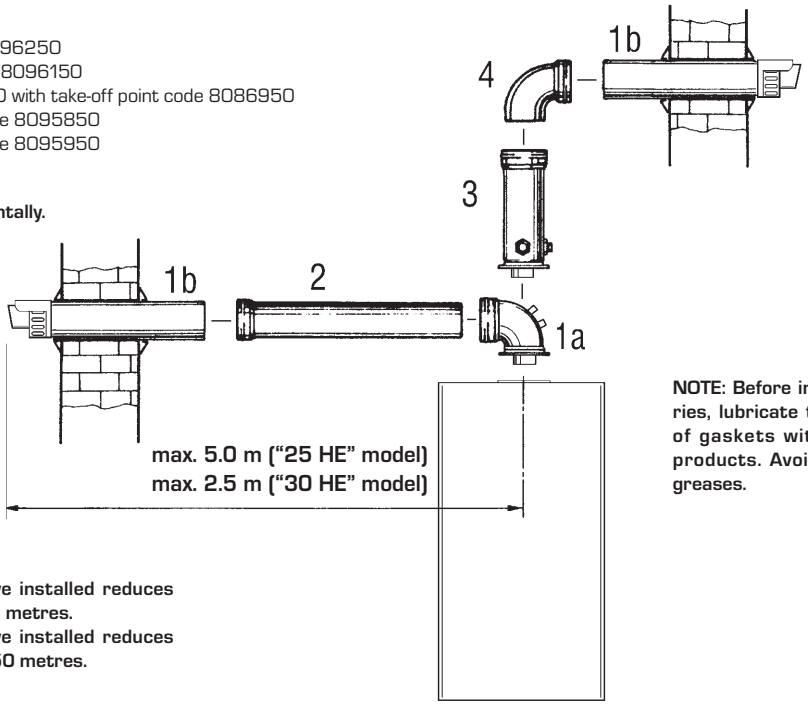

NOTE: Before installing accessories, lubricate the internal part of gaskets with silicon-based products. Avoid using oils and greases.

IMPORTANT:
- **Each additional 90° curve installed reduces the available length by 1.0 metres.**
- **Each additional 45° curve installed reduces the available length by 0.50 metres.**

Fig. 5

exceed 5.0 meter (25 HE) - 3.0 meter (30 HE). When the vertical extension code 8086950 is used, the terminal part of the pipe must always come out horizontally.

2.6 COAXIAL DUCT ø 80/125 (only for "30 HE" model)

The air inlet-smoke outlet assembly ø 80/125 is supplied in a kit code 8096253 complete with mounting instructions.

With the pipe bend included in the kit, the maximum length of the piping should not exceed 5.0 meter.

The diagrams in fig. 5/a illustrate a number of examples of different coaxial outlets ø 80/125.

2.7 POSITIONING THE OUTLET TERMINALS

The outlet terminals for forced-draught appliances may be located in the external perimeter walls of the building.
To provide some indications of possible solutions, **Table 3** gives the minimum distances to be observed, with reference to the type of building shown in fig. 6.

Only for "30 HE" model

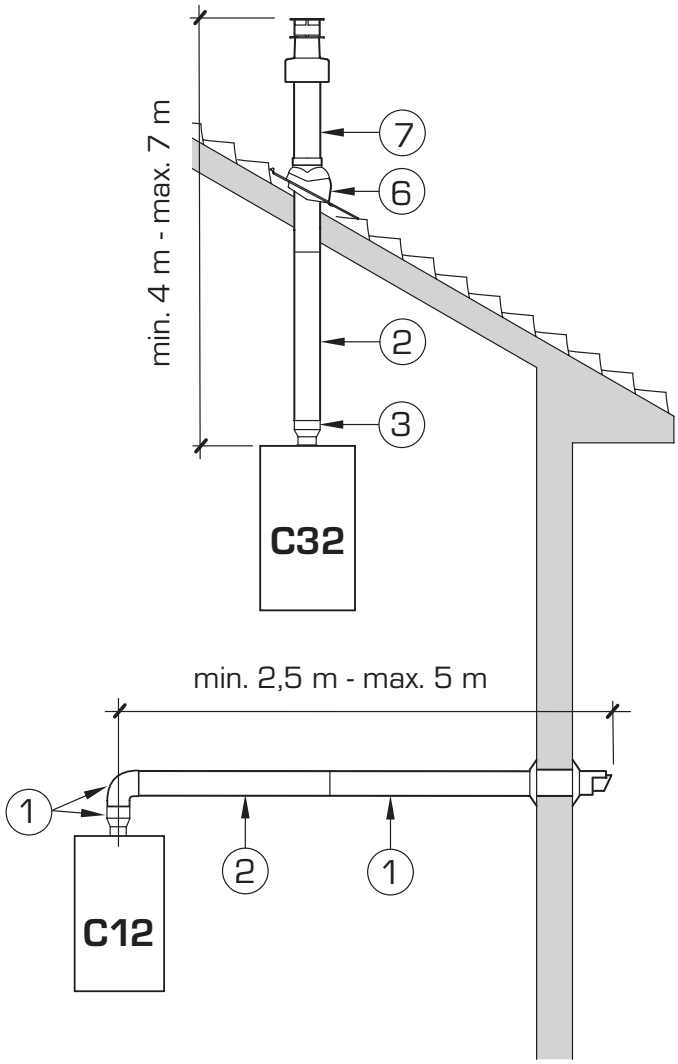

KEY
1 Coaxial duct kit code 8096253
2 a Extension L. 1000 code 8096171
2 b Extension L. 500 code 8096170
3 Adapter ø 80/125 code 8093150
4 a 90° additional bend code 8095870
4 b 45° additional bend code 8095970
6 Hinged tile code 8091300
7 Coaxial roof exit terminal L. 1285 code 8091205

IMPORTANT:
- **Each additional 90° curve installed reduces the available length by 1.0 metres.**
- **Each additional 45° curve installed reduces the available length by 0.50 metres.**

Fig. 5/a

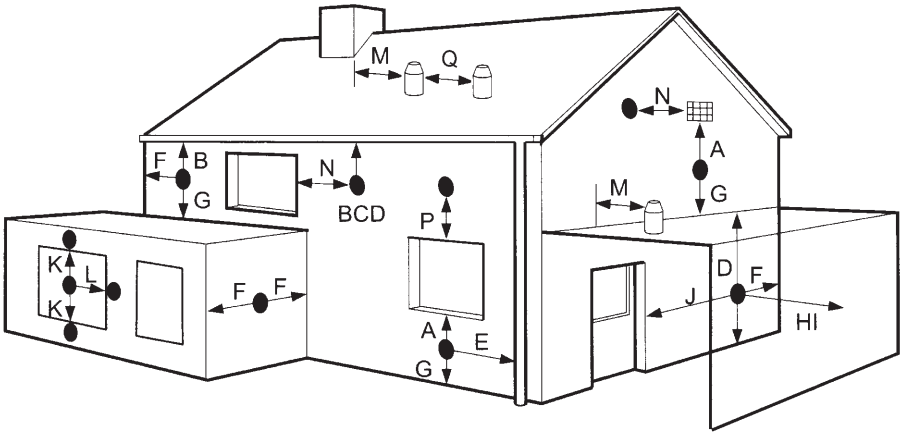

TABLE 3

Terminal position		Minimum spacing	
A	Directly below an openable window, air vent or any other ventilation opening	300 mm	12 in
B	Below guttering, drain pipes or soil pipes	75 mm	3 in
C/D	Below eaves, balconies or carport roof	200 mm	8 in
E	From vertical drain pipes or soil pipes	75 mm	3 in
F	From internal or external corners	300 mm	12 in
G	Above adjacent ground, roof or balcony level	300 mm	12 in
H	From a boundary or surface facing the boiler	600 mm	24 in
I	From a terminal facing the terminal	1,200 mm	48 in
J	From an opening in the carport (eg door, window into dwelling)	1,200 mm	48 in
K	Vertically from a terminal on the same wall	1,500 mm	60 in
L	Horizontally from a terminal on the same wall	300 mm	12 in
M	Horizontally from a vertical terminal to a wall	300 mm	12 in
N	Horizontally from an openable window or other opening	300 mm	12 in
P	Above an openable window or other opening	300 mm	12 in
Q	From an adjacent vertical terminal	600 mm	24 in

- If the terminal discharges into a pathway or passageway check that combustion products will not cause nuisance and that the terminal will not obstruct the passageway.
- Where the lowest part of the terminal is fitted less than 2 m (78 in) above ground, above a balcony or above a flat roof to which people have access, the terminal MUST be protected by a purpose designed guard. Terminal guards are available from Quinnell, Barrett, and Quinnell, Old Kent Road, London. State model C2, (G.C. Part No 382946).
- Where the terminal is fitted within 850 mm (34 in) of a plastic or painted gutter, or 450 mm (18 in) of painted eaves, an aluminium shield at least 1,500 mm (59 in) long must be fitted to the underside of the painted surface.
- The air inlet/outlet flue duct MUST NOT be closer than 25 mm (1 in) to combustible material.
- In certain weather conditions the terminal may emit a plume of steam. This is normal but positions where this would cause a nuisance should be avoided.

Fig. 6

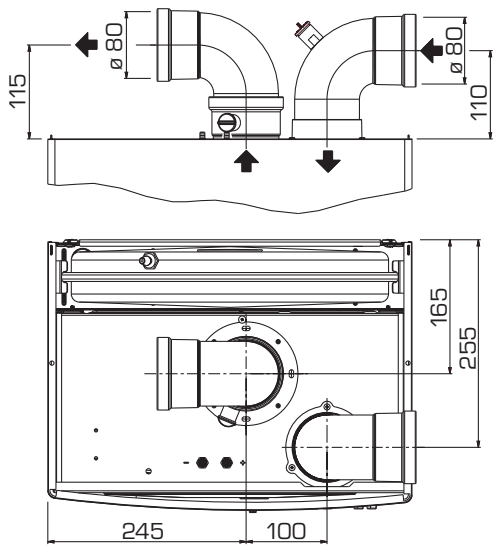

TABLE 4

Accessories ø 80	Head loss (mm H2O) **"25 HE" model**		Head loss (mm H2O) **"30 HE" model**	
	Inlet	Outlet	Inlet	Outlet
90° elbow MF	0.25	0.35	0.30	0.40
45° elbow MF	0.15	0.25	0.20	0.30
Extension L. 1000 (horizontal)	0.20	0.25	0.20	0.30
Extension L. 1000 (vertical)	0.20	0.15	0.20	0.20
Terminal	0.10	0.35	0.10	0.40
Roof outlet terminal *	1.30	0.15	1.50	0.20

* **The loss of the roof exit terminal in aspiration concludes the collector code 8091400**

Fig. 7

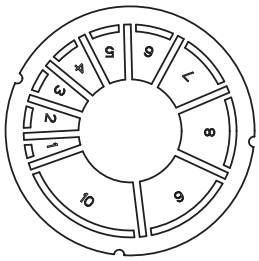

N° segments to remove	Total load loss mm H2O **"25 HE" model**
-	0 ÷ 2,0
n° 1	2,0 ÷ 4,0
n° 1 e 2	4,0 ÷ 6,0
da n° 1 a 3	6,0 ÷ 7,0
da n° 1 a 4	7,0 ÷ 8,0
da n° 1 a 6	8,0 ÷ 9,0
da n° 1 a 8	9,0 ÷ 10,0
without diaphragm	10,0 ÷ 11,5

N° segments to remove	Total load loss mm H2O **"30 HE" model**
-	0 ÷ 1,0
n° 1 e 2	1,0 ÷ 2,0
da n° 1 a 3	2,0 ÷ 3,0
da n° 1 a 4	3,0 ÷ 4,0
da n° 1 a 6	4,0 ÷ 5,0
da n° 1 a 7	5,0 ÷ 6,0
da n° 1 a 8	6,0 ÷ 7,0
without diaphragm	7,0 ÷ 8,0

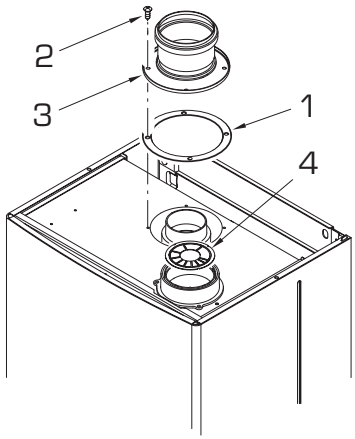

KEY
1 Gasket ø 125/95
2 Fixing screw
3 Flue outlet flange
4 Inlet air diaphragm

Fig. 8

2.8 SEPARATE PIPES ø 80 (Optional alternative twin pipe system)

A special kit may be used to separate the flue gas outlet from the fresh air intake (fig. 7).
The maximum overall length of the intake and exhaust ducts depends on the head losses of the single fittings installed (excluding the doublers) and must not be greater than 11.5 mm H2O ("25 HE" model) and 8.0 mm H2O ("30 HE" model).
For head losses in the fittings, refer to **Table 4**.

NOTE: To use only special accessories for condensing boilers.

2.8.1 Separate pipe accessories

Kit code 8089912 is supplied for this purpose (fig. 8).

2.9 ELECTRICAL CONNECTION

The boiler is supplied with an electric cable. Should this require replacement, it must be purchased exclusively from SIME.
The electric power supply to the boiler must be 230V - 50Hz single-phase through a fused main switch fitted with a 3amp fuse, with at least 3 mm spacing between contacts. Respect the L and N polarities and the earth connection.

NOTE: SIME declines all responsibility for injury or damage to persons, animals or property, resulting from the failure to provide for proper earthing of the appliance.

2.9.1 Electrical board (fig. 12)

Before performing any kind of operation, disconnect the unit from the power supply using the bipolar switch of the plant. Placing the boiler selector in position "OFF" does not disconnect the electric board from the power supply.
Remove the three screws (9) fixing the control board, and pull forward the panel until it tilts downwards. In order to gain access to the electrical board components, unscrew the four screws fixing the control panel cover.

2.9.2 Room thermostat (fig. 12)

After having removed the jumper, connect electrically the room thermostat to terminals 1-2 of the junction box (8).
In order to have better room comfort and temperature control, we suggest you to use a room thermostat belonging to Class II, as specified by standard EN60730.1 (clean contact).

IMPORTANT
Before performing any kind of operation, disconnect the unit from the power supply using the bipolar switch of the plant. Placing the boiler selector in position "OFF" does not disconnect the electric board from the power supply.

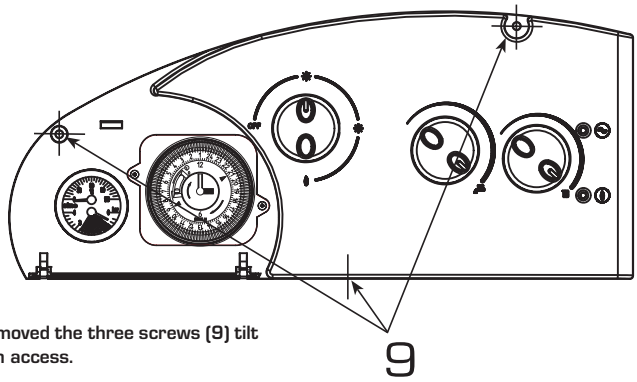

ATTENTION: After having removed the three screws (9) tilt the panel downwards to gain access.

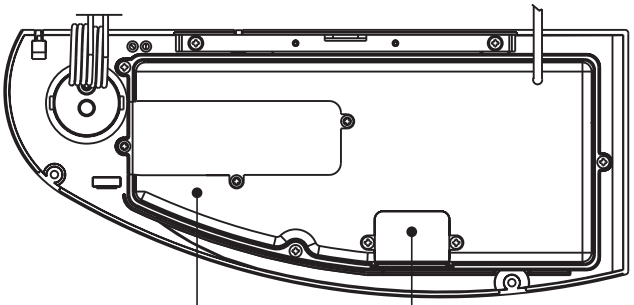

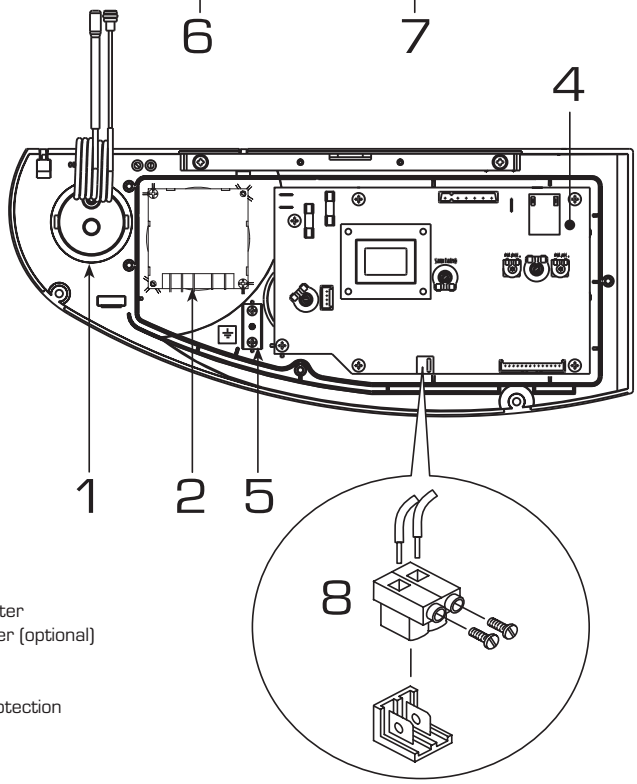

KEY
1 Thermohydrometer
2 Time programmer (optional)
4 Main PCB
5 Earth faston
6 Control panel protection
7 Cover (TA)
8 Connector (TA)
9 Fixing screw

Fig. 12

2.9.3 ECOMFORT SYSTEM PLUS 25 HE wiring diagram

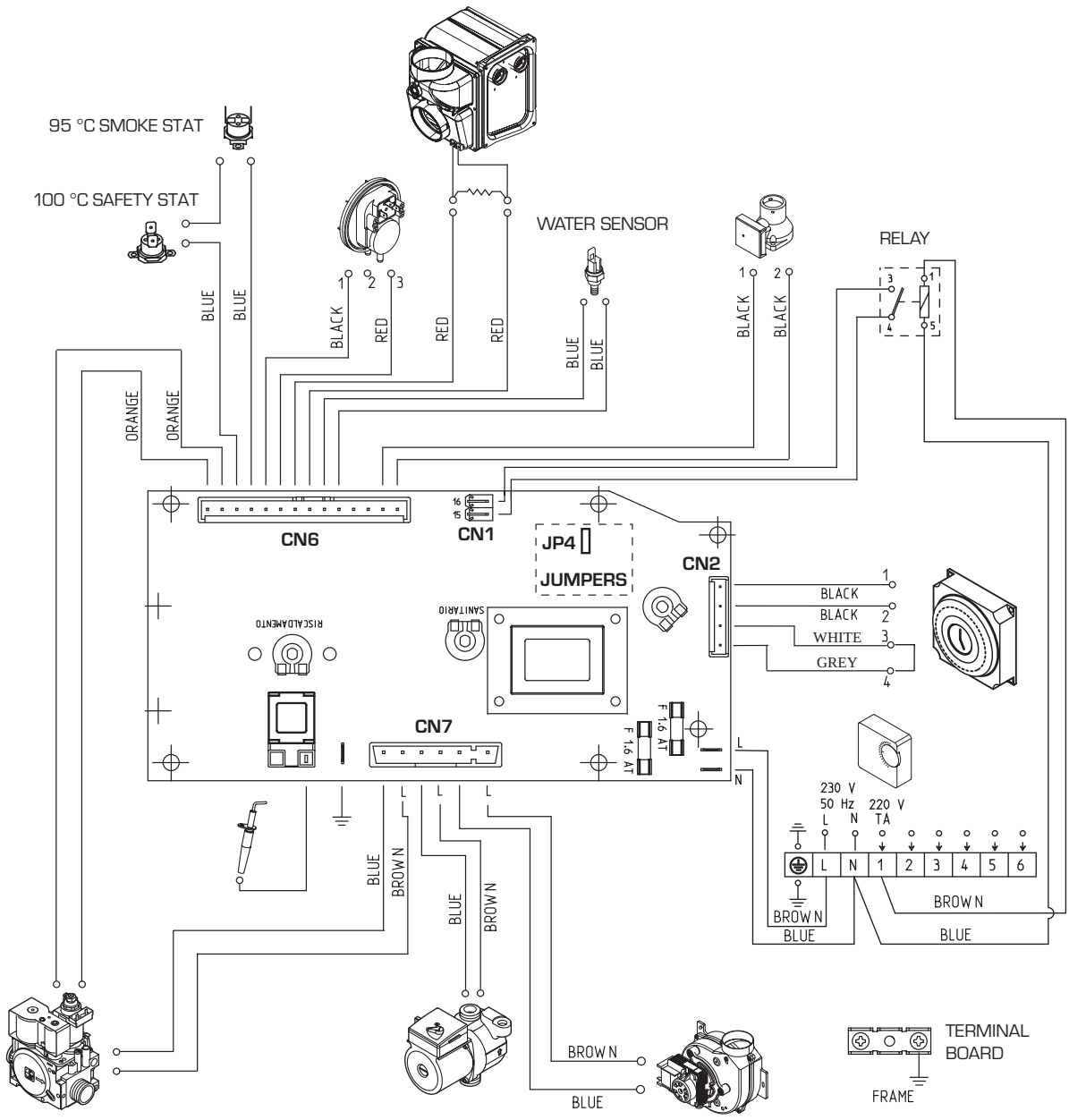

NOTE:
- **The room thermostat (TA) may be connected to the terminals 1.**
- **To remote control the boiler connect an external clock to the terminals 1-2 (24 V) of the "TA" connector and set the built-in clock to "constant" mode (see user instructions for details).**

JUMPERS POSITION AND FEATURES

JUMPER	POSITION AND FEATURE CLOSED	POSITION AND FEATURE OPEN	SUPPLY POSITION
JP4 - METANO/GPL	Ready to function with LPG	Ready to function with natural gas	Open

Fig. 13

2.9.4 ECOMFORT PLUS 25 - 30 HE wiring diagram

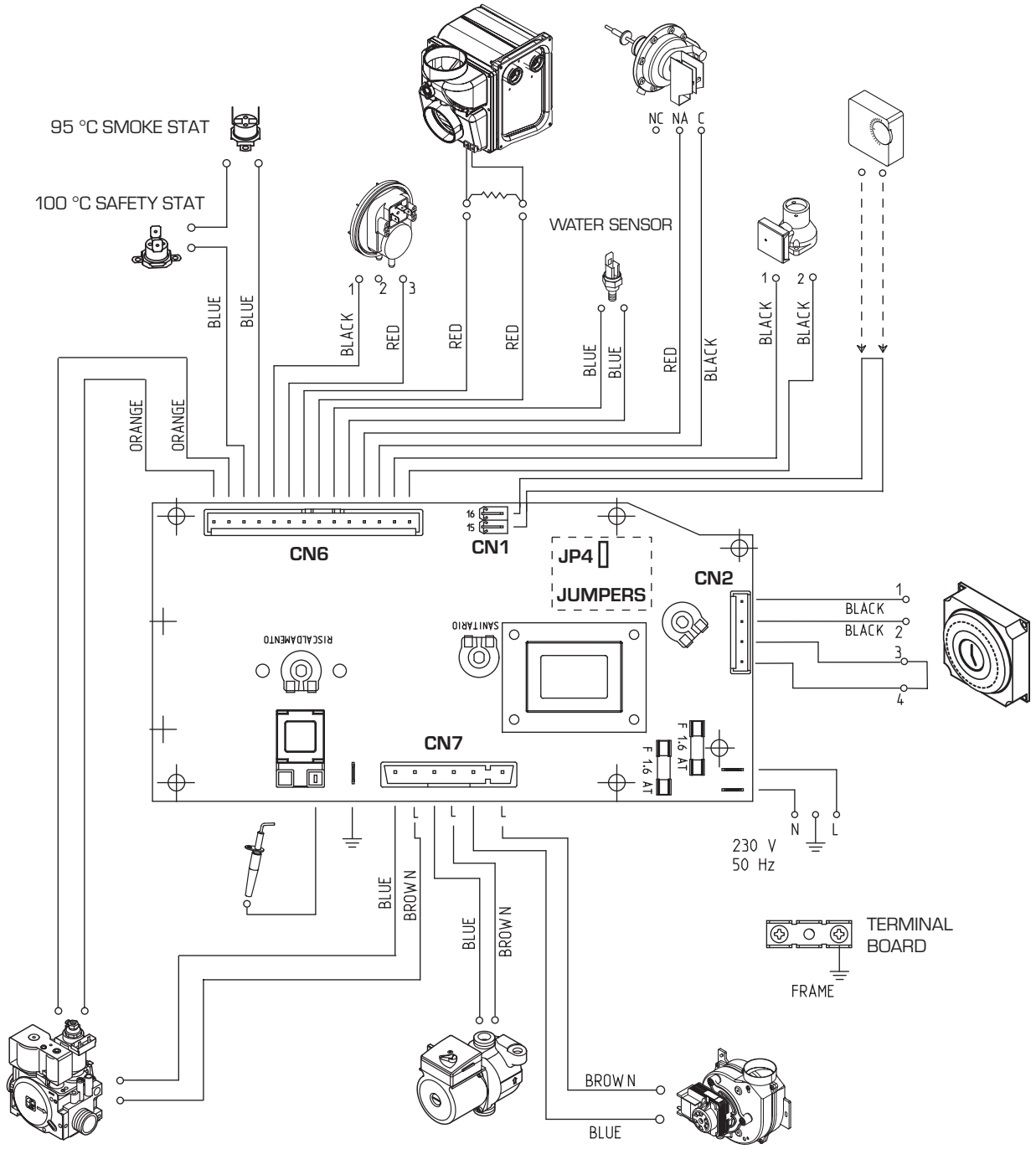

NOTE:

- **The room thermostat may be connected to the terminals 15-16 (CN1) of the "TA" connector after having removed the link.**
- **To remote control the boiler connect an external clock to the terminals 1-2 (24 V) of the "TA" connector and set the built-in clock to "constant" mode (see user instructions for details).**

JUMPERS POSITION AND FEATURES

JUMPER	POSITION AND FEATURE CLOSED	POSITION AND FEATURE OPEN	SUPPLY POSITION
JP4 - METANO/GPL	Ready to function with LPG	Ready to function with natural gas	Open

Fig. 13/a

3 CHARACTERISTICS

3.1 ELECTRONIC BOARD

The electronic board is manufactured in compliance with the 2006/95/CEE low-voltage directives. It is supplied with 230V. The electronic components are guaranteed against a temperature range of 0 up to +60°C. An automatic and continuous modulation system enables the boiler to adjust power to the various system requirements or the user's needs.

3.1.1 Fault and malfunction signaling

The indicator LEDS signaling irregular and/or incorrect operation of the equipment are indicated in fig. 14.

3.1.2 Devices

The electronic board is equipped with the following devices (fig. 15):

- **Connector "JP4"** (4)
  With the connector disconnected, the boiler is ready to function with METHANE; with the connector connected with GPL.

ATTENTION: It is essential that the operations described above be carried out by authorized technical staff.

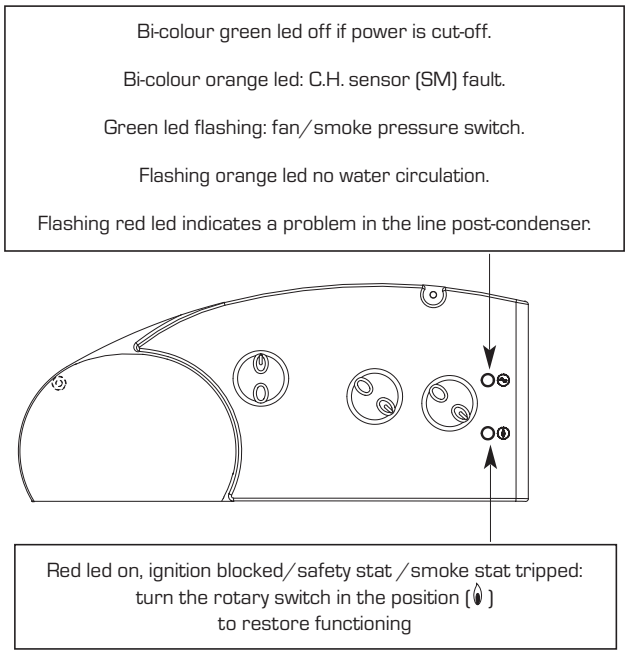

Fig. 14

3.2 TEMPERATURE SENSOR

Antifreeze system managed by active heating NTC sensor when water temperature is 6°C. The heating sensor works also as a limit thermostat which switches off the burner when temperature is over 90°C.
When sensor (SM) is interrupted, neither of the boiler's heating services will function.

Table 5 shows the resistance values (Ω) obtained on the heating sensor as the temperature varies.

TABLE 5

Temperature (°C)	Resistance (Ω)
20	12.090
30	8.313
40	5.828
50	4.161
60	3.021
70	2.229
80	1.669

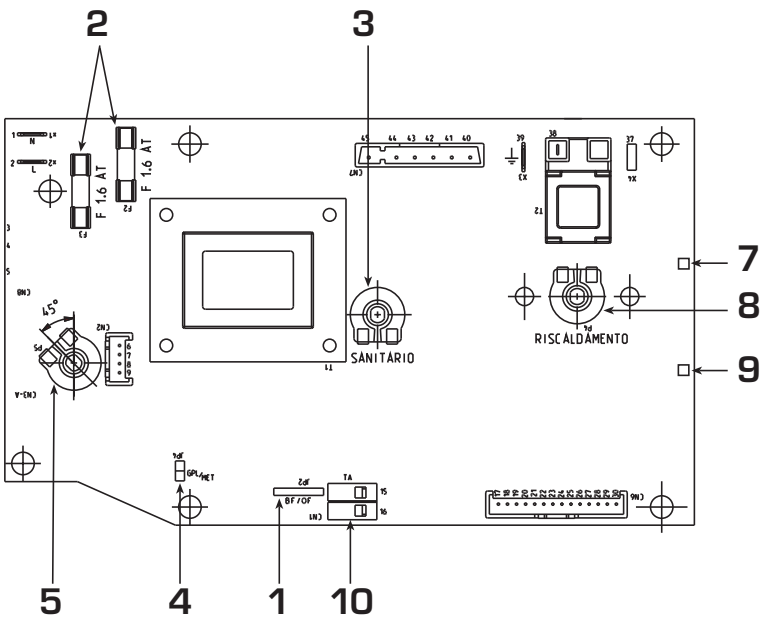

KEY
1 Jumper JP2
2 Fuse (1,6 AT)
3 D.H.W. potentiometer
4 Connector "JP4"
5 Rotay switch
7 Block red led
8 C.H. potentiometer
9 Bi-colour led gree/orange
10 Connector "TA"

Fig. 15

3.3 ELECTRONIC IGNITION

Ignition and flame detection is controlled by a sole electrode located on the burner. It guarantees maximum safety with intervention times, for accidental switching off or gas failure, within one second.

3.3.1 Operating cycle

Rotate the selector knob to summer or winter, and verify that green LED (Ⓘ) lights up to confirm the presence of voltage.
The burner must be ignited within 10 seconds max.
However, it is possible for ignition failures to occur, with consequent activation of "locked out" signal:

- **Gas failure**
  The electrode continues spark discharge for a maximum of 10 sec. If the burner does not light, the board - after a 5 second ventilation stop - reactivates discharge for further 10 seconds. This cycle will be repeated 5 times, after that, the lock-out red LED will light up.

  This may occur upon first ignition or after long periods of boiler lay-off when there is air in the pipes.
  It may be caused by the gas cock being closed or by one of the valve coils having a break in the winding, so that the valve cannot open.

- **Ignition electrode fails to spark**
  The electrode continues spark discharge for a maximum of 10 sec. If the burner does not light, the board - after a 5 second ventilation stop - reactivates discharge for further 10 seconds. This cycle will be repeated 5 times, after that, the lock-out red LED will light up.
  This may be due to a break in the wire of the electrode or to the wire not properly fastened to the ignition transformer terminal.
  The electrode itself may touch earth or may be heavily worn out and needs replacing. The electronic board is defective.

When there is a sudden voltage failure, the burner shuts down immediately; when the power supply returns, the boiler will start up again automatically.

3.4 FLOW SWITCH SAFETY VALVE

A flow switch safety valve (8 fig. 2) intervenes, blocking the operation of the burner if the boiler is without water due to the formation of air bubbles in the heat exchanger or if the circulator is not working correctly or because the "Aqua Guard" heating circuit filter is clogged.

3.5 SYSTEM AVAILABLE HEAD

The head available for the heating plant is shown as a function of the flow in graph in fig. 16.
To obtain the maximum head available to the system, turn off the by-pass by turning the union to the vertical position (fig. 16/a).

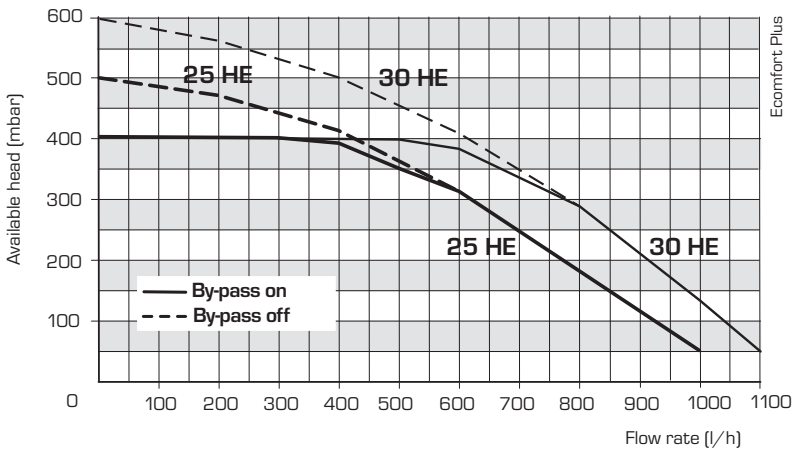

Fig. 16

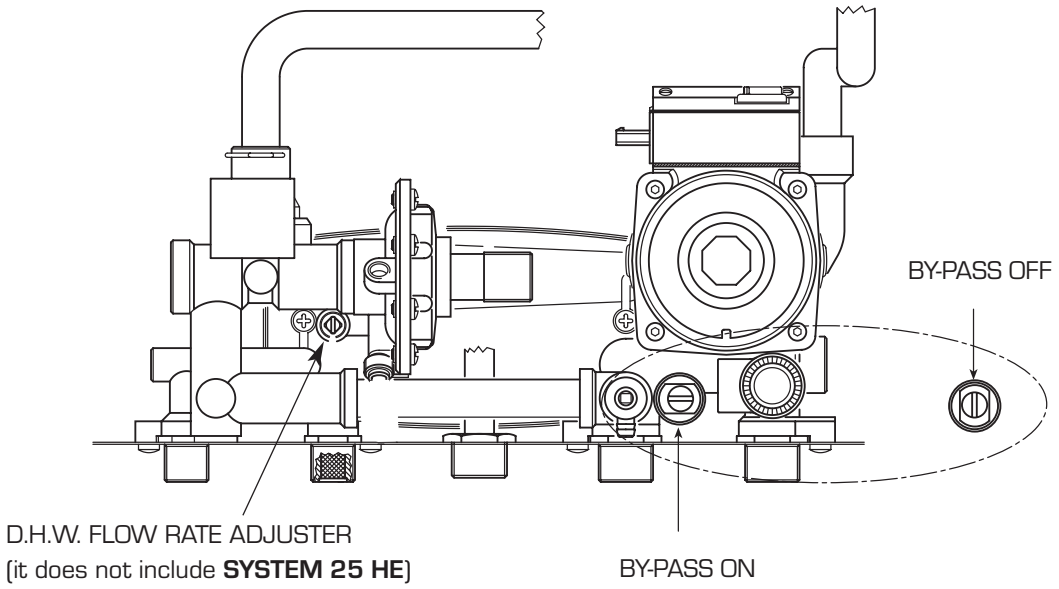

Fig. 16/a

3.6 SMOKE PRESSURE SWITCH

The air pressure switch is factory set to the values 42-52 Pa (**"25 HE"** model) and 52-62 Pa (**"30 HE"** model) to guarantee boiler functioning even with intake and flue pipes at the maximum permitted length.
The value of the signal to the pressure switch is measured using a special instrument connected to the pressure intake (10-18 fig. 3).

3.7 ELECTRICITY CONNECTION FOR ZONE SYSTEMS

When installing a system of this type, use a separate electrical line to which room thermostats with their local valves will be connected.
Connect micro switches or relay contacts on terminals 15-16 of the **"TA"** connector of the electronic card after removing the existing jumper (fig. 17).

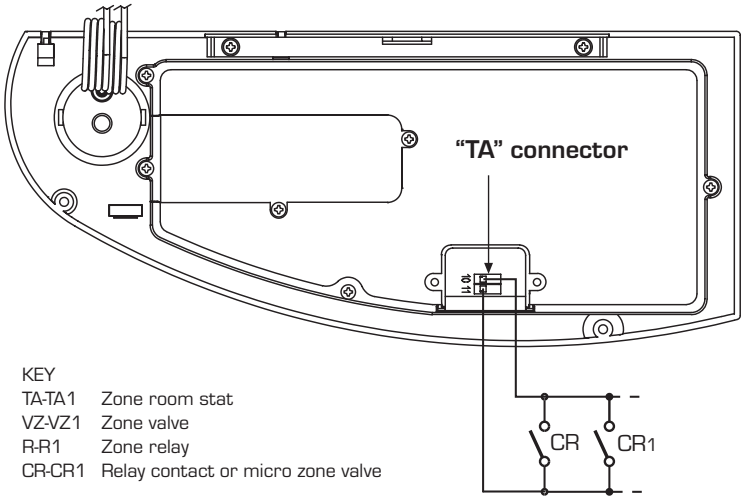

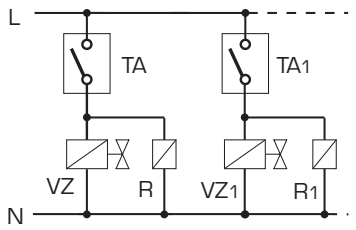

NOTE: Relays are used only if the area valves have no microswitches.

KEY

TA-TA1	Zone room stat
VZ-VZ1	Zone valve
R-R1	Zone relay
CR-CR1	Relay contact or micro zone valve

Fig. 17

4 USE AND MAINTENANCE

SIME SUPPORT
THE BENCHMARK INITIATIVE

All relevant sections of the Benchmark Checklist must be filled in at the time of installation. Commissioning of the boiler is not complete until this is done. The boiler service record must be completed at each service.

4.1 FILLING THE WATER SYSTEM

- Open the flow and return valves.
- Loosen the automatic air vent cap.
- Open all radiator valves and system air vents. Fill the system with water using one of the approved methods described in section 2.3.2 to about 0.5 bar greater than the system design pressure. Close all air vents. Do not close the A.A.V.
- Check the system for water soundness.
- Completely drain the appliance and heating system, thoroughly flush the system, and refill the system design pressure.
- Before refillimg check and clean the Aquaguard filter (4.9).

4.1.1 Flow Rate Adjustment

The DHW flow rate should be set using the flow rate adjuster (see fig. 16/a) to the value shown in section 1.3.

4.2 GAS VALVE

The boilers are equipped standard with the SIT 845 SIMGA/HONEYWELL VK 4105M /SIEMENS VGU 50 gas valve (fig. 21).
The gas valve is set at two pressure values: maximum and minimum. According to the type of gas burnt, these correspond to the values given in **Table 6**. The gas pressures at the maximum and minimum values, are factory set. Consequently they must not be altered. Only when you switch the appliance from one type of gas supply (methane) to another (butane or propane), it is permitted to alter the operating pressure.

4.3 GAS CONVERSION

This operation must be performed by authorised personnel using original Sime components.

To convert from natural gas to LPG or vice versa, perform the following operations (fig. 22):
- Close the gas cock.
- Disassemble the burner manifold (3).
- Replace the main nozzles (6) supplied in a kit, inserting the copper washer (4). Use a ø 7 spanner to perform this operation.
- Remove the "METANO/GPL" connector link on the card and set it in the position corresponding to the gas to be used (4 fig. 15).
- To set the values of maximum and minimum gas pressure, follow the instructions given in section 4.5.1.
- After have ultimated the conversion of the boiler, please stick onto the casing panel the plate showing the relevant feeding gas which is included into the kit.

NOTE: When reassembling components which you have removed, replace gas seals; test all gas connections after assembly using leak detector fluid. In no circumstances should a naked flame be used.

4.5.1 Adjusting valve pressure

Set maximum and minimum pressure on gas valves as follows (fig. 22/a):
- Connect the column or a manometer to the intake downstream of the gas valve. **Disconnect the valve VENT pressure test point tube (5 fig. 21).**
- Remove the cap (1) from the modulator.
- Place the hot tap water potentiometer knob at the maximum position.
- Turn on the boiler using the four-way switch and turn on a hot water tap all the way.
- Remember that rotating clockwise will increase pressure while rotating anti-

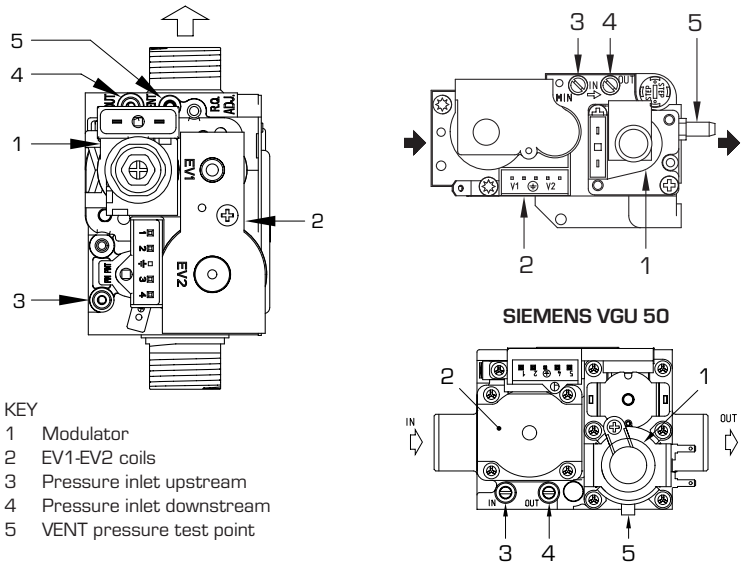

KEY
1 Modulator
2 EV1-EV2 coils
3 Pressure inlet upstream
4 Pressure inlet downstream
5 VENT pressure test point

TABLE 6

Type of gas	Burner max. pressure mbar		Modulator current	Burner min. pressure mbar		Modulator current
	25 HE	**30 HE**	mA	**25 HE**	**30 HE**	mA
G20 *	11.5	11.7	130	2.0	2.1	0
G30	28.5	28.5	165	4.8	5.0	0
G31	36.5	36.5	165	4.8	5.0	0

(*) Max. burner pressure is guaranteed only when the supply pressure exceeds the max. burner pressure by at least 3 mbar.

Fig. 21

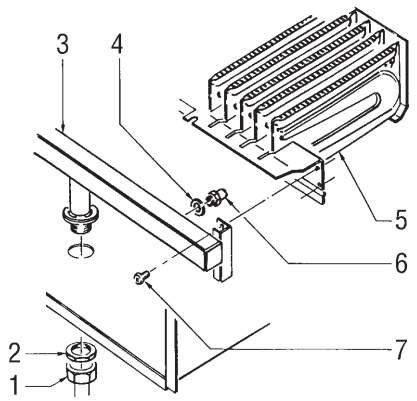

KEY
1 Swivel connection 1/2"
2 Locknut 1/2"
3 Burner manifold
4 Washer ø 6.1
5 Burners
6 Nozzle M6
7 Screw

WARNING: To ensure a perfect seal, always use the washer (4) supplied in the kit when replacing nozzles, even in burner units for which it is not specified.

Fig. 22

clockwise will diminish it.
- Adjust maximum pressure using the nut (3) with a wrench to the maximum pressure value indicated in **Table 6**.
- Do not adjust minimum pressure until you have adjusted maximum pressure.
- Turn off the supply power to the modulator, and keep the hot water tap turned on.
- Lock the nut (3) in place, turn the screw /nut (2) to the minimum pressure indicated in **Table 6**.
- Turn off the boiler and turn it back on again several times, keeping the hot water tap turned on at all times and checking that the maximum and minimum pressure values correspond to the established values; correct the settings if necessary.
- Adjust, checking that you have restored the power to the modulator.
- Put the pipe back on the valve VENT pressure test point.
- Remove the manometer, remembering to tighten the screw for closing the pressure test point.
- Put the plastic cap (1) back on the modulator and seal with a drop of coloured sealant if necessary.

4.8 REMOVAL OF OUTER CASING

It is possible to completely disassemble the shell for an easy maintenance of the boiler as showed in fig. 21.

4.9 CLEANING AND MAINTENANCE

Preventive maintenance and checking of efficient operation of equipment and safety devices must be carried out exclusively by authorized technical personnel.

4.10 CLEANING THE C.H. WATER FILTER "AQUA GUARD" (fig. 22)

To clean the filter, close the flow/return valves, turn off the power to the control panel, remove the casing and empty the boiler using the drain provided until the hydrometer shows "zero". Place a container for collection underneath the filter, unscrew the cap and proceed to clean the filter, removing impurities and limestone deposits. Check the seal o-ring before reassembling the cap with the filter.

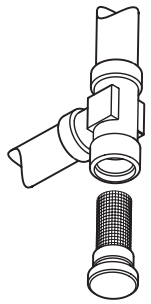

Fig. 22

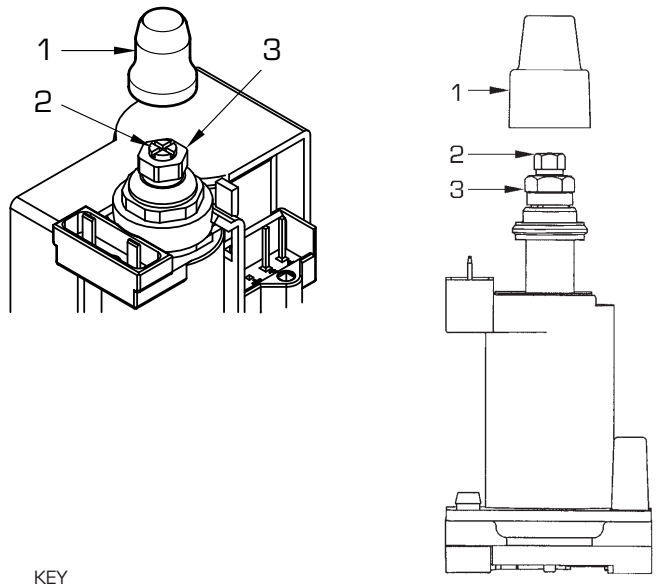

KEY
1 Plastic tap
2 Minimum pressure adjusting nut
3 Maximum pressure adjusting nut

Fig. 22/a

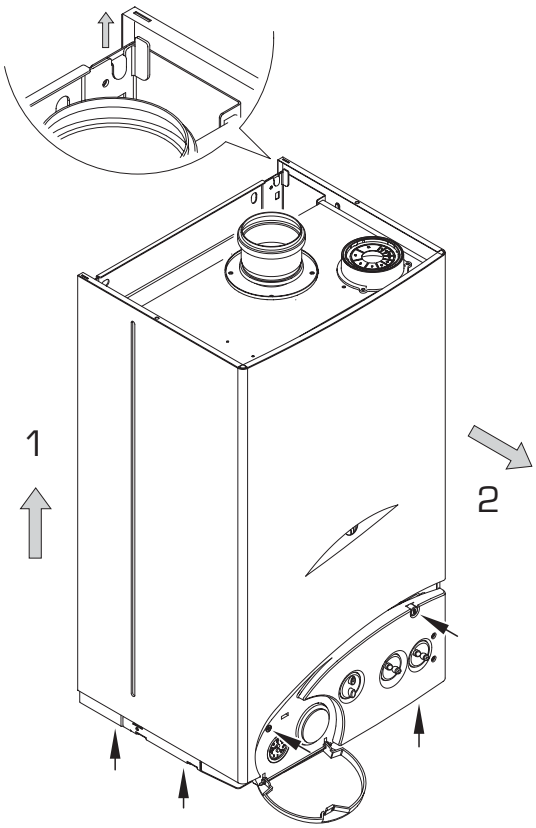

Fig. 21

4.11 CHIMNEY SWEEP FUNCTION
(fig. 23)

To carry out the verification of combustion in the boiler turn the selector and stop on the position ( ) until the green/orange led starts to flash intermittently.
From that moment the boiler will start functioning in heating mode at the maximum power, with switching off at 80°C and restarting at 70°C.
Before activating the chimney sweep function make sure that the radiator valves or eventual zone valves are open.
The test may be carried out also during hot-water service functioning.
To do so it is enough, after having activated the chimney sweep function, to take some hot water from one or more cocks.
Even in this condition the boiler functions at the maximum temperature always with the primary controlled between 80°C and 70°C.
During the entire duration of the testing the hot water taps must remain open.
After verifying the combustion the boiler should be switched off by placing the selector on the **OFF** position; then return the selector to the desired function.

ATTENTION: After about 15 minutes, or once the hot water request has been fulfilled, the chimney sweep function automatically deactivates.

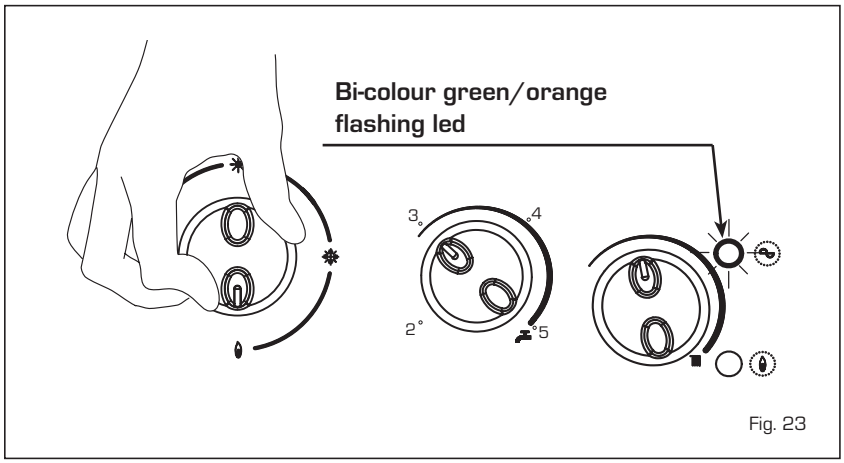

Fig. 23

4.12 BOILER SERVICING

4.12.1 Routine Servicing

To ensure continued efficient operation of the appliance, it is recommended that it is checked and serviced at regular intervals. The frequency of service will depend on the particular installation and conditions of usage, but in general once a year should be adequate.
It is the law that a competent person such as a Gas Safe Register registered engineer, must carry out any service work.

4.12.2 Combustion Check

Incorporated into the flue elbow or vertical adaptor is a sampling point.
The grey plastic cap should be unscrewed and the flue gas sampled using a flue gas analyser.
During the test the boiler can be operated in "chimney sweep mode" see 4.11.
The correct CO_2 reading can be found in section 1.3.

4.12.3 Burner inspection

Remove the burner as described in section 6.3.
Inspect the burner and if necessary clean using a soft brush.
Check the Ignition/ionisation electrode, check the gap (4mm+/- 0.5mm)

4.12.4 Combustion Chamber

Remove any loose debris from the combustion chamber using a soft brush and a vacuum cleaner.
Take care not to damage the rear insulation panel.

4.12.5 Condensate Trap

The condensate trap would not normally require removal during service, but it can be checked.
Water should be poured into the inner flue.
Great care must be taken to ensure no water enters the outer flue.
Check that the water flows freely to the drain.
Should it require removal, firstly remove wire clip securing the condensate drain rubber pipe to the condensate trap.
Remove the pipe.
Remove the two screws securing the condensate trap bracket.
Clean the trap and refit in reverse order.

4.12.6 Flow Switch

The operation of the flow switch should be checked at each service.
Remove small cover retaining screw and remove the cover.
When the pump is running and water is flowing around the boiler, the actuator lifts off the microswitch.
Check the operation of the actuator. Ensure that it is free and that it lifts and returns.
If necessary lubricate the pivot point of the actuator.
Isolate the boiler.
Drain it using the drain provided.
Remove the microswitch by carefully pulling it forward off its mounting pins.
Remove the screw securing the mounting plate, then pull off the plate.
Pull out the actuator pin.
Lubricate the centre "O" ring.
Refit the actuator ensuring that the flat side of the round section is to the bottom.
Re-assemble remaining parts (see 4.12.7 before refilling the boiler).

4.12.7 Aquaguard Filter

It is recommended that the aquaguard filter is checked at each service.
See section 4.10.

GAS BOILER SYSTEM COMMISSIONING CHECKLIST

This Commissioning Checklist is to be completed in full by the competent person who commissioned the boiler as a means of demonstrating compliance with the appropriate Building Regulations and then handed to the customer to keep for future reference.

Failure to install and commission this equipment to the manufacturer's instructions may invalidate the warranty but does not affect statutory rights.

Customer Name _____ Telephone Number _____

Address _____

Boiler Make and Model _____

Boiler Serial Number _____

Commissioned by *(print name)* _____ GAS SAFE REGISTER ID Number _____

Company Name _____ Telephone Number _____

Company Address _____

_____ Commissioning Date _____

To be completed by the customer on receipt of a Building Regulations Compliance Certificate*:

Building Regulations Notification Number *(if applicable)* _____

CONTROLS Tick the appropriate boxes

Time and Temperature Control to Heating	Room Thermostat and Programmer/Timer ☐	Programmable Room Thermostat ☐	Load/Weather Compensation ☐	Optimum Start Control ☐
Time and Temperature Control to Hot Water	Cylinder Thermostat and Programmer/Timer ☐			Combination Boiler ☐
Heating Zone Valves	Fitted ☐			Not Required ☐
Hot Water Zone Valves	Fitted ☐			Not Required ☐
Thermostatic Radiator Valves	Fitted ☐			Not Required ☐
Automatic Bypass to System	Fitted ☐			Not Required ☐
Boiler Interlock				Provided ☐

ALL SYSTEMS

The system has been flushed and cleaned in accordance with BS7593 and boiler manufacturer's instructions Yes ☐

What system cleaner was used?

What inhibitor was used? Quantity ____ *litres*

CENTRAL HEATING MODE Measure and Record:

Gas Rate ____ m^3/hr OR ____ ft^3/hr

Burner Operating Pressure (if applicable) ____ mbar OR Gas Inlet Pressure ____ mbar

Central Heating Flow Temperature ____ °C

Central Heating Return Temperature ____ °C

COMBINATION BOILERS ONLY

Is the installation in a hard water area (above 200ppm)? Yes ☐ No ☐

If yes, has a water scale reducer been fitted? Yes ☐ No ☐

What type of scale reducer has been fitted?

DOMESTIC HOT WATER MODE Measure and Record:

Gas Rate ____ m^3/hr OR ____ ft^3/hr

Burner Operating Pressure (at maximum rate) ____ mbar OR Gas Inlet Pressure (at maximum rate) ____ mbar

Cold Water Inlet Temperature ____ °C

Hot water has been checked at all outlets Yes ☐ Temperature ____ °C

Water Flow Rate ____ *l/min*

CONDENSING BOILERS ONLY

The condensate drain has been installed in accordance with the manufacturer's instructions and/or BS5546/BS6798 Yes ☐

ALL INSTALLATIONS

If required by the manufacturer, record the following CO_2 ____ % OR CO ____ *ppm* OR CO/CO_2 Ratio ____

The heating and hot water system complies with the appropriate Building Regulations Yes ☐

The boiler and associated products have been installed and commissioned in accordance with the manufacturer's instructions Yes ☐

The operation of the boiler and system controls have been demonstrated to and understood by the customer Yes ☐

The manufacturer's literature, including Benchmark Checklist and Service Record, has been explained and left with the customer Yes ☐

Commissioning Engineer's Signature _____

Customer's Signature _____

(To confirm satisfactory demonstration and receipt of manufacturer's literature)

*All installations in England and Wales must be notified to Local Authority Building Control (LABC) either directly or through a Competent Persons Scheme. A Building Regulations Compliance Certificate will then be issued to the customer.

benchmark COLLECTIVE MARK
THE MARK OF QUALITY FOR THE INSTALLATION, COMMISSIONING AND SERVICING OF DOMESTIC HEATING AND HOT WATER SYSTEMS

©Heating and Hotwater Industry Council (HHIC)

www.centralheating.co.uk

SERVICE RECORD

It is recommended that your heating system is serviced regularly and that the appropriate Service Record is completed.

Service Provider
Before completing the appropriate Service Record below, please ensure you have carried out the service as described in the manufacturer's instructions.

Always use the manufacturer's specified spare part when replacing controls.

SERVICE 1 Date
Energy Efficiency Checklist completed? Yes ☐ No ☐
Engineer Name
Company Name
Telephone Number
GAS SAFE REGISTER ID Number
Comments
Signature

SERVICE 2 Date
Energy Efficiency Checklist completed? Yes ☐ No ☐
Engineer Name
Company Name
Telephone Number
GAS SAFE REGISTER ID Number
Comments
Signature

SERVICE 3 Date
Energy Efficiency Checklist completed? Yes ☐ No ☐
Engineer Name
Company Name
Telephone Number
GAS SAFE REGISTER ID Number
Comments
Signature

SERVICE 4 Date
Energy Efficiency Checklist completed? Yes ☐ No ☐
Engineer Name
Company Name
Telephone Number
GAS SAFE REGISTER ID Number
Comments
Signature

SERVICE 5 Date
Energy Efficiency Checklist completed? Yes ☐ No ☐
Engineer Name
Company Name
Telephone Number
GAS SAFE REGISTER ID Number
Comments
Signature

SERVICE 6 Date
Energy Efficiency Checklist completed? Yes ☐ No ☐
Engineer Name
Company Name
Telephone Number
GAS SAFE REGISTER ID Number
Comments
Signature

SERVICE 7 Date
Energy Efficiency Checklist completed? Yes ☐ No ☐
Engineer Name
Company Name
Telephone Number
GAS SAFE REGISTER ID Number
Comments
Signature

SERVICE 8 Date
Energy Efficiency Checklist completed? Yes ☐ No ☐
Engineer Name
Company Name
Telephone Number
GAS SAFE REGISTER ID Number
Comments
Signature

SERVICE 9 Date
Energy Efficiency Checklist completed? Yes ☐ No ☐
Engineer Name
Company Name
Telephone Number
GAS SAFE REGISTER ID Number
Comments
Signature

SERVICE 10 Date
Energy Efficiency Checklist completed? Yes ☐ No ☐
Engineer Name
Company Name
Telephone Number
GAS SAFE REGISTER ID Number
Comments
Signature

5 FAULT FINDING

If an electrical fault occurs on the appliance the preliminary electrical system checks must be carried out first.
When any service or replacement of electrical components which has required the breaking and re-making of electrical connections has taken place, the following tests must be repeated:
- earth continuity;
- short circuit;
- polarity;
- resistance to earth.

5.1 EARTH CONTINUITY CHECK

Appliances must be electrically disconnected, meter set on Ω (ohm) x 1 scale and adjust zero if necessary. Tests leads from any appliance earth point (e.g. inside control box) see wiring diagrams (section 7) to earth pin on plug.
Resistance should be less than 1 Ω (ohm). If the resistance is greater than 1 Ω (ohm) check all earth wires for continuity and all contacts are clean and tight. If the resistance to earth is still greater than 1 Ω (ohm) then this should be investigated futher.

5.2 SHORT CIRCUIT CHECK

Switches turned FULL ON - meter set on Ω (ohms) x 1 scale. Test leads from L to N on appliance terminal block, if meter reads 0 then there is a short circuit.
Meter set on Ω (ohm) x 100 scale. Repeat it with leads from L to E. If meter reads less than infinity (∞) there is a fault.

NOTE: Should it be found that the fuse has failed but no fault is indicated, a detailed continuity check (i.e. by disconnecting and checking each component) is required to trace the faulty component.
It is possible that a fault could occur as a result of local burning/arcing but no fault could be found under test. However, a detailed visual inspection should reveal evidence of burning around the fault.

5.3 POLARITY CHECK

Appliance reconnected to mains supply and meter set on 300 V ac scale. Test at appliance terminal block.
- Test leads from L to N meter reads approx.: 240 V ac.
- Test leads from L to E " ☀ " meter reads approx. 240 V ac.
- Test leads from N to E " ☀ " meter reads from 0 to 15 V ac.

5.4 RESISTANCE TO EARTH CHECK

Appliance must be disconnected from main supply and meter on Ω (ohm) x 100 scale.
All switches including thermostat on test leads from L to E - if meter reads other than infinity (∞) there is a fault which should be isolated.
A detailed continuity check is required to trace the faulty component.

IMPORTANT:
These series of checks are the first electrical checks to be carried out during a fault finding procedure. On completion of the service/fault finding task which has required the breaking and remaking of electrical connections then the checks 5.1 Earth continuity, 5.3 Polarity and 5.4 Resistance to earth must be repeated.

5.5 C.H. MODE - FAULT FINDING

Start from cold

Rotary switch set to WINTER position.
Room thermostat (if fitted) calling for heat and all D.H.W. taps off.
C.H. thermostat set to maximum position.
Clock in the on position (if fitted).

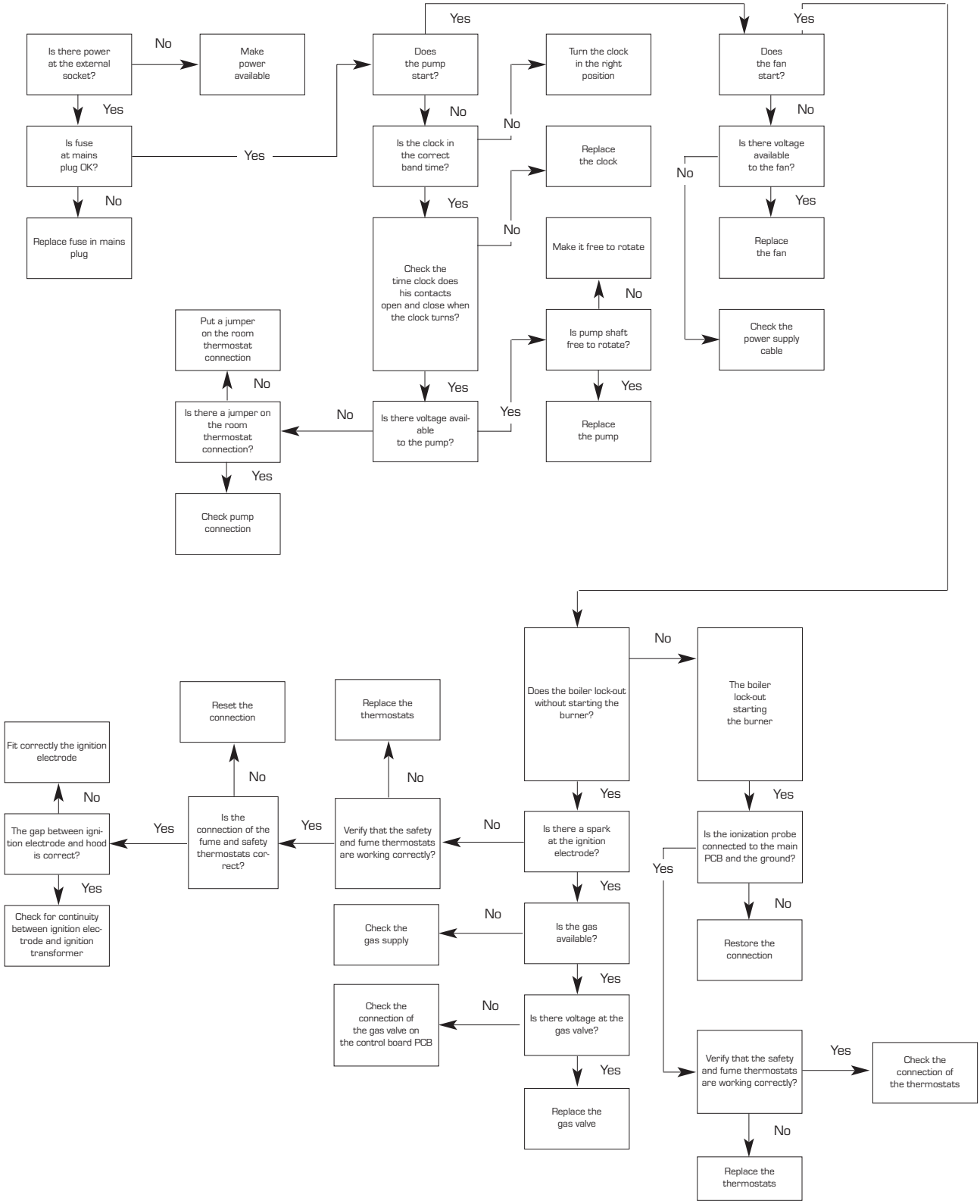

NOTE:
After completing fault finding reset the room thermostat (if fitted) to the required setting. If the appliance will not function check the wiring to the clock and if necessary, replace the clock.

5.6 D.H.W. MODE - FAULT FINDING

Start from cold - rotary switch set to SUMMER position, D.H.W. thermostat set to maximum, and all D.H.W. taps OFF.

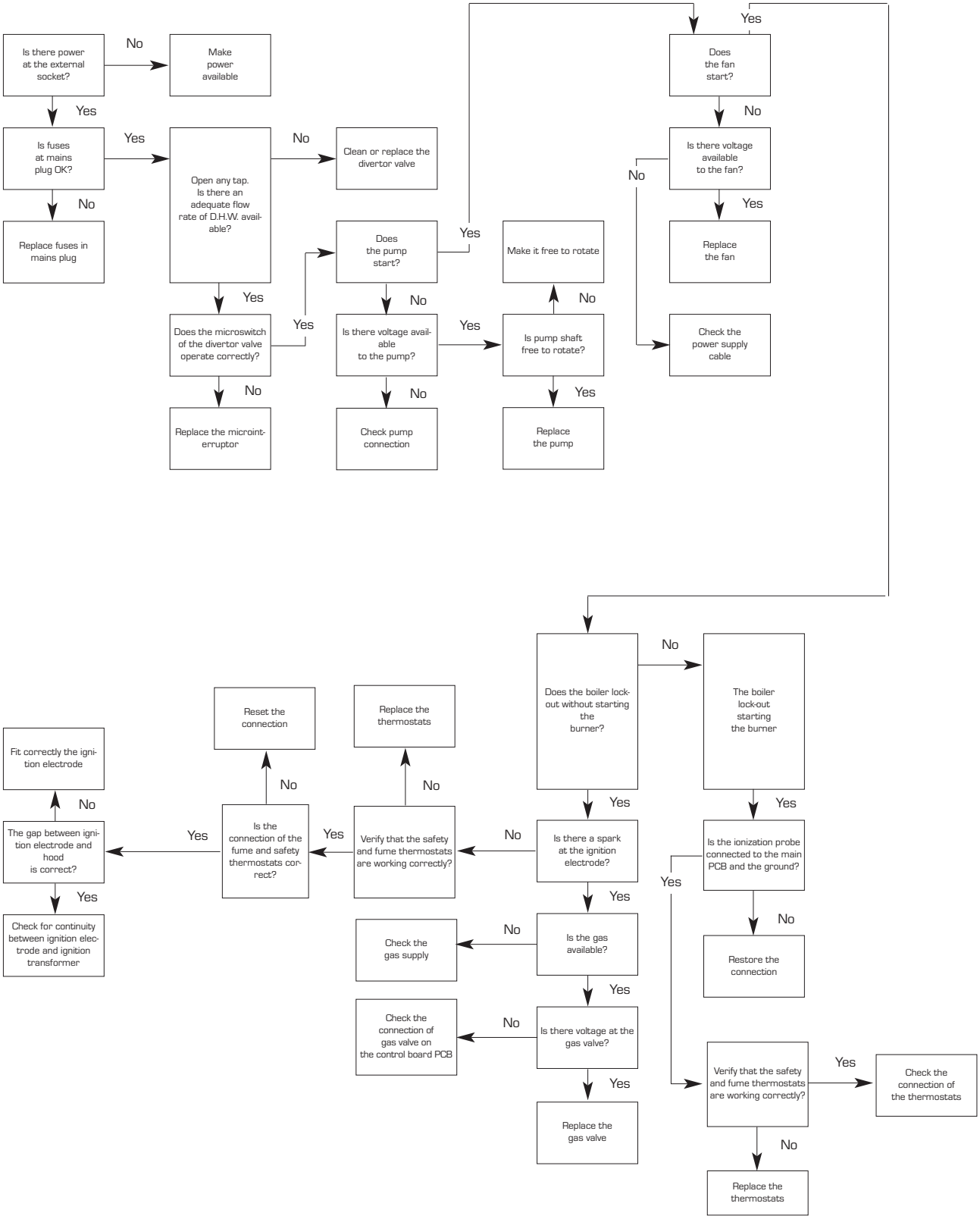

6 REPLACEMENT OF PARTS

Note: Use silicone grease to ease the fitting of any push fit connections.

6.1 Expansion Vessel

- Isolate power supply
- Remove boiler cover
- Isolate flow and return valves
- Drain boiler using fitted drain vent
- Disconnect expansion pipe
- Remove expansion vessel securing nut
- Remove vessel
- Check new vessel for correct pressure 1- 1.25 bar
- Refit in reverse order.

6.2 Ignition/Ionisation electrode

- Isolate power supply
- Remove boiler cover
- Remove sealed chamber cover
- Remove PCB cover
- Disconnect ignition lead
- Carefully remove lead through PCB cover and burner compartment
- Remove electrode fixing screw and remove electrode from burner
- Replace in reverse order.

6.3 Main Burner

- Isolate power supply
- Isolate gas supply
- Remove boiler cover
- Remove sealed chamber cover
- Remove burner cover
- Disconnect gas connection to burner
- Remove locknut securing burner assembly
- Remove ignition/ionisation electrode
- Carefully lift out burner assembly
- Refit in reverse order
- Test for gas tightness.

6.4 Fan assembly

- Isolate power supply
- Remove boiler cover
- Remove sealed chamber cover
- Disconnect wiring to fan
- Remove two fan fixing screws
- Carefully pull fan forward and to the right to disconnect fan from post condenser
- Remove air pressure switch sensing tube
- Apply light coating of silicone grease to nozzle of new fan
- Refit in reverse order.

6.5 Main Heat Exchanger

- Isolate power supply
- Isolate gas supply
- Isolate flow and return valves
- Drain boiler using drain vent
- Remove fan assembly as described in 6.4
- Remove 4 screws and remove fan mount ing plate
- Disconnect thermistor (SM sensor)
- Disconnect flow and return connections
- Lift out heat exchanger
- Refit in reverse order.

6.6 95°C Limit stat

- Isolate power supply
- Remove boiler cover
- Remove sealed chamber cover
- Remove fan as described in 6.4
- Remove wires from 95°C stat
- Remove stat fixing screws
- Apply heat sink compound to new stat
- Refit in reverse order.

6.7 Air Pressure Switch

- Isolate power supply
- Remove boiler cover
- Remove sealed chamber cover
- Remove screws securing air pressure switch
- Note position of wires before removal
- Note position of sensing tube before removal
- Refit in reverse order.

6.8 100°C Safety Stat

- Isolate power supply
- Remove boiler cover
- Disconnect 100°C safety stat
- Remove fixing screws
- Refit in reverse order.

6.9 Thermistor (SM sensor)

- Isolate power supply
- Remove boiler cover
- Remove sealed chamber cover
- Isolate flow and return valves
- Drain boiler using drain vent
- Disconnect thermistor
- Unscrew thermistor (catch any water lost)
- Refit in reverse.

6.10 Gas Valve

- Isolate power supply
- Isolate gas supply
- Remove boiler cover
- Disconnect wiring from gas valve
- Disconnect sensing tube
- Remove gas valve
- Refit in reverse order ensuring seals are replaced as required
- Recommission boiler and adjust gas pressures as described in section 4.5.1
- Check for gas tightness.

6.11 Circuit Board (PCB)

- Isolate power supply
- Remove screws securing control panel
- Lower panel to horizontal position
- Remove PCB cover
- Disconnect all wiring
- Remove control knobs
- Remove PCB fixing screws
- Transfer trimmer spindles to new board
- Ensure PCB links are matched to old board
- Refit in reverse order
- Recommission boiler.

6.12 Pump Motor

- Isolate power supply
- Remove boiler cover
- Isolate flow and return valves
- Drain boiler using drain vent
- Remove plug connection
- Remove 4 x fixing screws, catch any lost water
- Refit in reverse using new washers.

6.13 Diverter Valve Microswitch

- Isolate power supply
- Remove boiler cover
- Pull microswitch assembly forward off the diverter valve head
- Refit in reverse order.

6.14 Domestic Hot Water Heat exchanger

- Isolate power supply
- Isolate flow and return
- Turn on DHW tap
- Close cold water supply isolation valve
- Drain boiler using drain vent
- Remove diverter valve microswitch as described in 6.13
- Remove microswitch actuator from top of diverter valve
- Remove 3 x heat exchanger fixing screws
- Remove plate heat exchanger, catch any water lost
- Ensure that the four "O" rings are removed from the technil assembly
- Fit the new "O" ring supplied with the new heat exchanger to the heat exchanger
- Refit in reverse order.

6.15 Diverter Valve

- Remove Diverter valve microswitch as described in 6.13
- Remove plate heat exchanger as described in 6.14

- Remove the securing clip at retaining the plug at the LHS of diverter assembly NOTE: a internal spring will push off the plug. Retain
- Remove internal bush from spindle
- Remove diverter valve head securing clip
- Pull diverter valve head from assembly
- Remove spindle from assembly complete with bush and spacer
- Replace in reverse order replacing "O" rings as required.

6.16 Auto Air Vent (AAV)

- Isolate power supply
- Isolate flow and return valves
- Remove boiler cover
- Drain boiler using drain vent
- Remove AAV
- Replace in reverse order.

6.17 Safety Valve

- Isolate power supply
- Isolate flow and return valves
- Remove boiler cover
- Drain boiler using drain vent
- Disconnect pipe from safety valve
- Remove safety valve securing clip
- Remove safety valve, catch any water lost
- Refit in reverse.

6.18 Pressure / Temperature Gauge

- Isolate power supply
- Isolate flow and return valves
- Remove boiler cover
- Drain boiler using drain vent
- Remove the clip securing the pressure sensor
- Remove the clip securing thermometer bulb
- Carefully remove the gauge
- Refit in reverse order.

7 EXPLODED VIEWS

7.1 ECOMFORT SYSTEM PLUS 25 HE

COD. **3830033/549** TYPE **ECOMFORT PLUS 25 HE SYSTEM** DATE **11.05.2009** PAGE **1/3**

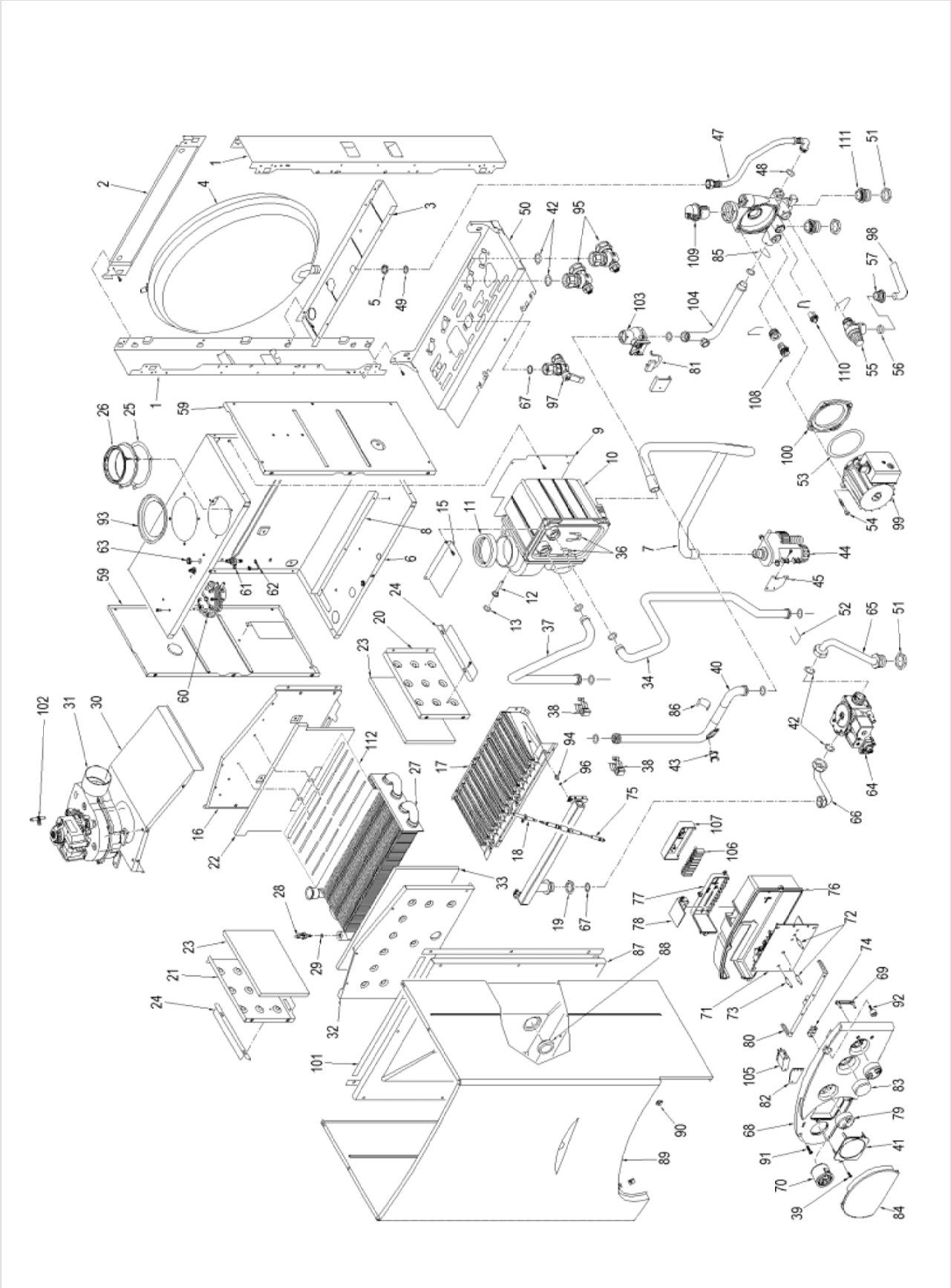

COD. **3830033/549** TYPE **ECOMFORT PLUS 25 HE SYSTEM** DATE **11.05.2009** PAGE **2/3**

POSITION		CODE	DESCRIPTION	MODEL	NOTE
1		6138570	Side frame part		
2		6138771	Frame assembly upper support		
3		6255431	Expansion vessel lower support		
4	•	5139130	Expansion vessel l.8 - 3/8" M		
5		6146305	Brass Nut 3/8"		
7		6034153	Condensate drainage pipe		
8		6257521	Combustion chamber lower air deflector		
9		6010827	Post-condenser fixing bracket		
10		6300801	Post-condensator		
11		6248855	P.C. inlet/oulet smokes gasket		
12		6112320	P.C. smokes stat extension		
13		6226443	O-Ring Ø 11,5 x 1,5		
15		6257522	Air deflector		
16		6288432	Combustion chamber rear panel		
17		5190700	Main burner assembly		
18	•	6235931	Ignition-ionisation electrode		
19		6146301	Brass nut 1/2"		
21		6288610	Combust. chamber left hand side panel		
22		6139773	Combustion chamber rear insulation		
23		6139792	Combustion chamber side insulation		
24		6257530	Comb. chamber right/left air deflector		
25		6028707	Air intake gasket		
26		6288000	Air intake		
27		6174257	Heat exchanger		
28	•	6231351	Plunged sensor		
29	•	6022010	Sensor gasket		
30		6260616	Smoke chamber upper panel		
31		6225630	Fan		
32		6288720	Combustion chamber front panel		
33		6139786	Combustion chamber front insulation		
34		6264831	C.H. return pipe		
36		6226616	Pipe fixing spring		
37		6227211	Exchanger-post condensatoeintlet pipe		
38	•	6226601	Spring for heat exchanger connection		
39		2005201	Screw "HI-LO" TSP 3x12		
40		6264731	C.H. flow pipe		
41		6247360	Cap for time programmer		
42		2030228	Gasket Ø 17x24x2		

POSITION		CODE	DESCRIPTION	MODEL	NOTE
43	•	6146701	100°C safety stat		
44	•	6277204	Water trap		
45		6189574	Water trap fixing bracket		
47	•	6017310	Flexible pipe		
48		6226414	O-ring 117 Ø 13,1x2,62 EP851		
49		2030226	Gasket Ø 10,2x14,8x2		
50		6138880	Frame assembly lower side		
51		6146302	Brass nut 3/4"		
52		6226607	Pipe fixing spring		
53		6028705	Gasket EP709 for Dab		
54		2000201	Screw M5x40		
55	•	6040201	Pressure relief valve		
56		6100202	Ogive for pipe Ø 15		
57		6168401	Locking nut for pipe Ø 15		
59		6288200	Sealed chamber side panel		
60	•	6225707	Air pressure switch		
61		6280500	3-ways junct. with press. test nipple		
62		6280550	Cap for 3-ways junction		
63		6146303	Brass Nut 1/8"		
64		6243820	SIT gas valve type 845 SIGMA		
65		6226850	Gas inlet pipe		
66		6226945	Pipe connecting gas valve-main burner		
67		2030227	Gasket Ø 12x18x2		
68		6289818	Control panel		
69		6273210	Guidelight - 2 ways out		
70	•	6217003	Temperature and pressure gauge		
71		6301400	Main PCB		
72		6201505	Trimmer spindle Ø 6		
73		6201502	Trimmer spindle Ø 6		
74		2211610	Earth faston		
75	•	6269810	Ignition cable		
76		6289900	Control panel protecting cover		
77		6290300	Control panel cable cover		
78		6290200	Room stat connection cover		
79		6290100	White knob Ø 40		
80		6009585	Control panel bracket		
81	•	6131401	Microswitch for flowmeter		
82		6009557	Relay fixing bracket		

• Recommended stock parts - Componenti da tenere a scorta

POSITION		CODE	DESCRIPTION	MODEL	NOTE
83		6247326	Cap for knob hole		
84		6290014	Flap door		
85		6226605	Fixing spring		
86		2051100	Retaining spring		
87		6288310	Sealed chamber front panel		
88		6001210	Peephole		
89		6287331	Casing		
90		2013302	Fastener for self tapping screw		
91		2004510	Screw 8Px7/8”		
92		6112420	Control panel screw		
93	•	6028624	Air diaphragm Ø 87.5		
94		6154402	Main burner nozzle NP 130 natural gas		
94	A	6154410	Main burner nozzle NP 77 GLP		
95		6177505	Ball cock 3/4” x 22		
96		6022004	Copper washer Ø 6		
97		6177530	Gas cock 3/4” F x 15		
98		6157602	Pressure relief valve drain pipe		
99	•	5192600	Dab VA55 pump kit		
100		6281509	Motor ring pump Dab VA55		
101		5192200	Gasket for sealed chamber		
102		6263912	Fan pressure test point		
103	•	6149303	Flow water switch		
104		6227520	Pipe connecting water flow switch		
105	•	6190403	Relay Omron G2R-1-T		
106		2211004	Terminal strip		
107		6290350	Terminal strip protection cover		
108	•	6017210	Manual air vent 1/4”		
109	•	6013101	Automatic air vent		
110		6296916	By-pass		
111		6281500	Straight fitting 3/4”		
112		6058811	Smoke deflector		
		5184818	Fitting cocks kit		
		5187370	Technyl hydraulic group		
		5191189	Complete control panel		
		6031206	Main cable L=2000		
		6299924	6 pole Stocko connector CN7		
		6299988	4 pole Lumberg cable connector CN2		
		5144719	Conversion kit to LPG		

POSITION		CODE	DESCRIPTION	MODEL	NOTE
	•	6281506	O-ring kit for hydraulic group		
		6281507	Split pin kit for hydraulic group		
		6281534	Gaskets kit		
		6299987	14 pole Lumberg cable connector CN6	up to s.n. 3829300566	
		6319102	14 pole Lumberg cable connector CN6	From s.n. 3829300567	

Products reference:

8104013: Ecomfort Plus 25 HE System

Check the correspondence with the boiler data plate.

• Recommended stock parts - Componenti da tenere a scorta

7.2 ECOMFORT PLUS 25-30 HE

COD. **3830032/547** TYPE **ECOMFORT PLUS HE** DATE **11.05.2009** PAGE **1/3**

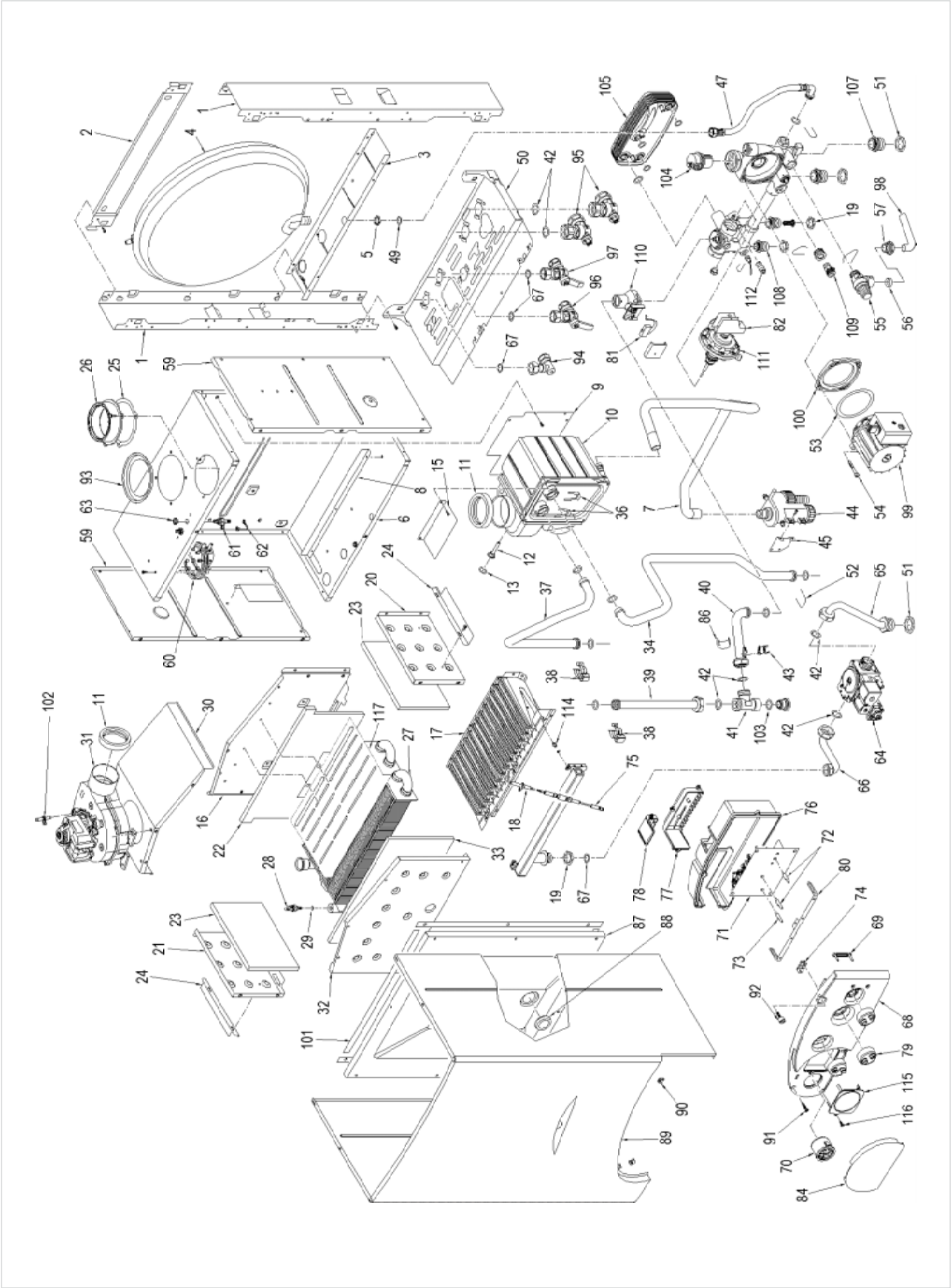

COD. **3830032/547** TYPE **ECOMFORT PLUS HE** DATE **11.05.2009** PAGE **2/3**

POSITION		CODE	DESCRIPTION	MODEL	NOTE
1		6138570	Side frame part		
2		6138771	Frame assembly upper support		
3		6255431	Expansion vessel lower support		
4	•	5139130	Expansion vessel l.8 - 3/8" M		
5		6146305	Brass Nut 3/8"		
6		6288120	Sealed chamber rear panel		
7		6034153	Condensate drainage pipe		
8		6257521	Combustion chamber lower air deflector		
9		6010827	Post-condenser fixing bracket		
10		6300801	Post-condenser		
11		6248855	P.C. inlet/oulet smokes gasket		
12		6112320	P.C. smokes stat extension		
13		6226443	O-Ring Ø 11,5 x 1,5		
15		6257522	Air deflector		
16		6288432	Combustion chamber rear panel		
17		5190700	Main burner assembly	25	
17	A	5190752	Main burner assembly	30	
18	•	6235931	Ignition-ionisation electrode		
19		6146301	Brass nut 1/2"		
20		6288510	Combust. chamber right hand side panel		
21		6288610	Combust. chamber left hand side panel		
22		6139773	Combustion chamber rear insulation		
23		6139792	Combustion chamber side insulation		
24		6257530	Air deflector		
25		6028707	Air intake gasket		
26		6288000	Air intake		
27		6174257	Heat exchanger		
28	•	6231351	Plunged sensor		
29	•	6022010	Sensor gasket		
30		6260616	Smoke chamber upper panel		
31		6225630	Fan		
32		6288720	Combustion chamber front panel		
33		6139786	Combustion chamber front insulation		
34		6264831	C.H. return pipe		
36		6226616	Pipe fixing spring		
37		6227211	Exchanger-post condenser inlet pipe		
38	•	6226601	Spring for heat exchanger connection		
39		6264772	Pipe conn. C.H. filter-C.H. exchanger		

POSITION		CODE	DESCRIPTION	MODEL	NOTE
40		6264748	C.H. flow pipe		
41		6295501	C.H. filter 3/4"M x 3/4"M		
42		2030228	Gasket Ø 17x24x2		
43	•	6146701	100°C safety stat		
44	•	6277204	Water trap	25	
45		6189574	Water trap fixing bracket		
47	•	6017310	Flexible pipe		
49		2030226	Gasket Ø 10,2x14,8x2		
50		6138880	Frame assembly lower side		
51		6146302	Brass nut 3/4"		
52		6226607	Pipe fixing spring		
53		6028705	Gasket EP709 for Dab		
54		2000201	Screw M5x40		
55	•	6040201	Pressure relief valve		
56		6100202	Ogive for pipe Ø 15		
57		6168401	Locking nut for pipe Ø 15		
59		6288200	Sealed chamber side panel		
60	•	6225707	Air pressure switch	25	
60	A	6227515	Heat exchanger inlet pipe	30	
61		6280500	3-ways junct. with press. test nipple		
62		6280550	Cap for 3-ways junction		
63		6146303	Brass Nut 1/8"		
64		6243820	SIT gas valve type 845 SIGMA		
65		6226850	Gas inlet pipe		
66		6226945	Pipe connecting gas valve-main burner		
67		2030227	Gasket Ø 12x18x2		
68		6289817	Control panel		
69		6273210	Guidelight - 2 ways out		
70	•	6217005	Temperature and pressure gauge		
71		6301400	Main PCB		
72		6201505	Trimmer spindle Ø 6		
73		6201502	Trimmer spindle Ø 6		
74		2211610	Earth faston		
75	•	6269810	Ignition cable		
76		6289900	Control panel protecting cover		
77		6290300	Control panel cable cover		
78		6290200	Room stat connection cover		
79		6290100	White knob Ø 40		

• Recommended stock parts - Componenti da tenere a scorta

COD. **3830032/547** TYPE **ECOMFORT PLUS HE** DATE **11.05.2009** PAGE **3/3**

POSITION		CODE	DESCRIPTION	MODEL	NOTE
80		6009585	Control panel bracket		
81	•	6131401	Microswitch for flowmeter		
82		5191900	Divertor valve microswitch + support		
84		6290014	Flap door		
86		2051100	Retaining spring		
87		6288310	Sealed chamber front panel		
88		6001210	Peephole		
89		6287331	Casing		
90		2013302	Fastener for self tapping screw		
91		2004510	Screw 8Px7/8”		
92		6112420	Control panel screw		
93	•	6028624	Air diaphragm Ø 87.5		
94		6142330	Quarter bend 1/2” x 15		
95		6177505	Ball cock 3/4” x 22		
96		6177506	Ball cock 1/2” x 15		
97		6177530	Gas cock 3/4” F x 15		
98		6157602	Pressure relief valve drain pipe		
99	•	5192600	Dab VA55 pump kit	25	
99 A	•	5192601	Dab VA65 circulating pump kit	30	
100		6281509	Motor ring pump Dab VA55		
100 A		6281511	Motor ring pump WSC F60	30	
101		5192200	Gasket for sealed chamber		
102		6263912	Fan pressure test point		
103		6226429	O-ring 121		
104	•	6013101	Automatic air vent		
105		6265601	Plate-type heat exchanger	25	
105 A		6265603	Plate-type heat exchanger	30	
107		6281500	Straight fitting 3/4”		
108		6281501	Straight fitting 1/2”		
109	•	6017210	Manual air vent 1/4”		
110	•	6281502	Flow water switch spare parts		
111	•	6281504	Divertor valve		
112		6281512	Water rate adjuster		
114		6154402	Main burner nozzle NP 130 natural gas		
114 A		6154410	Main burner nozzle NP 77 GLP		
115		6247360	Cap for time programmer		
116		2005201	Screw “HI-LO” TSP 3x12		
117		6058811	Smoke deflector		

POSITION		CODE	DESCRIPTION	MODEL	NOTE
		5187323	Technyl hydraulic group	30	
		5191187	Complete control panel		
		6127210	Main cable L=2000	25	
		6299924	6 pole Stocko connector CN7	25	
	•	6233506	Fuse T1,6A 250V		
		6281523	C.H. Technyl manifold		
		6281524	D.H.W. Technyl manifold		
		8085606	90° elbow with take-off points		
		8102110	Gasket and flange kit		
		6289580	Cable + electrode P.C. resistance		
		5184817	Fitting cocks kit	25	
	•	5144716	Conversion kit to LPG		
		5144719	Conversion kit to LPG		
		6299988	4 pole Lumberg cable connector CN2		
	•	6281506	O-ring kit for hydraulic group		
		6281507	Split pin kit for hydraulic group		
		6281534	Gaskets kit		
		6299923	14 pole Lumberg cable connector CN6	up to s.n. 3846300420	
		6319101	14 pole Lumberg cable connector CN6	From s.n. 3846300421	

Products reference:

8104012 : Ecomfort Plus 25 HE
8104011 : Ecomfort Plus 30 HE

Check the correspondence with the boiler data plate.

• Recommended stock parts - Componenti da tenere a scorta

Cod. 6272248A - 05/09 - Documentation Dpt.

Sime Ltd
1a Blue Ridge Park
Thunderhead Ridge
Glasshoughton, Castleford, WF10 4UA

Customer Service: 0870 9911114
Sales: 0870 9911116
Technical Support: 0870 9911117
Main Fax: 0870 9911115

www.sime.ltd.uk