spares & parts online
IBASIS.co.uk©

PLEASE LEAVE THIS INSTRUCTION
WITH THE USER

MURELLE HE

Installation and servicing instructions

benchmark
COLLECTIVE MARK
THE MARK OF QUALITY FOR THE INSTALLATION, COMMISSIONING AND SERVICING OF DOMESTIC HEATING AND HOT WATER SYSTEMS

WRAS APPROVED PRODUCT

sime®

All descriptions and illustrations provided in this manual have been carefully prepared but we reserve the right to make changes and improvements in our products that may affect the accuracy of the information contained in this manual.

Code Of Practice

For the installation, commissioning and servicing of domestic heating and hot water products

Benchmark places responsibilities on both manufacturers and installers.* The purpose is to ensure that customers** are provided with the correct equipment for their needs, that it is installed, commissioned and serviced in accordance with the manufacturer's instructions by competent persons and that it meets the requirements of the appropriate Building Regulations. Installers are required to carry out work in accordance with the following:

Standards of Work

- Be competent and qualified to undertake the work required.
- Install, commission, service and use products in accordance with the manufacturer's instructions provided.
- Ensure that where there is responsibility for design work, the installation is correctly sized and fit for purpose.
- Meet the requirements of the appropriate Building Regulations. Where this involves notifiable work be a member of a Competent Persons Scheme or confirm that the customer has notified Local Authority Building Control (LABC), prior to work commencing.
- Complete all relevant sections of the Benchmark Checklist/Service Record when carrying out commissioning or servicing of a product or system.
- Ensure that the product or system is left in a safe condition and, whenever possible, in good working order.
- Highlight to the customer any remedial or improvement work identified during the course of commissioning or servicing work.
- Refer to the manufacturer's helpline where assistance is needed.
- Report product faults and concerns to the manufacturer in a timely manner.

Customer Service

- Show the customer any identity card that is relevant to the work being carried out prior to commencement or on request.
- Give a full and clear explanation/demonstration of the product or system and its operation to the customer.
- Hand over the manufacturer's instructions, including the Benchmark Checklist, to the customer on completion of an installation.
- Obtain the customer's signature, on the Benchmark Checklist, to confirm satisfactory demonstration and receipt of manufacturer's instructions.
- Advise the customer that regular product servicing is needed, in line with manufacturers' recommendations, to ensure that safety and efficiency is maintained.
- Respond promptly to calls from a customer following completion of work, providing advice and assistance by phone and, if necessary, visiting the customer.
- Rectify any installation problems at no cost to the customer during the installer's guarantee period.

benchmark
COLLECTIVE MARK
THE MARK OF QUALITY FOR THE INSTALLATION, COMMISSIONING AND SERVICING OF DOMESTIC HEATING AND HOT WATER SYSTEMS

*The use of the word "installer" is not limited to installation itself and covers those carrying out installation, commissioning and/or servicing of heating and hot water products, or the use of supporting products (such as water treatment or test equipment).
**Customer includes householders, landlords and tenants.

© Heating and Hotwater Industry Council (HHIC)

The Benchmark Scheme

Sime Ltd is a licensed member of the Benchmark Scheme which aims to improve the standards of installation and commissioning of domestic heating and hot water systems in the UK and to encourage regular servicing to optimise safety, efficiency and performance.

Benchmark is managed and promoted by the Heating and Hotwater Industry Council.
For more information visit www.centralheating.co.uk

CE IPX4D

Murelle System HE 12: *Gas Council number 41-283-05*
Murelle System HE 20: *Gas Council number 41-283-06*
Murelle System HE 25: *Gas Council number 41-283-07*
Murelle System HE 30: *Gas Council number 41-283-08*
Murelle System HE 35: *Gas Council number 41-283-09*
Murelle HE 25: *Gas Council number 47-283-10*
Murelle HE 30: *Gas Council number 47-283-11*
Murelle HE 35: *Gas Council number 47-283-12*

These appliances comply with the S.E.D.B.U.K. scheme, band "A"

CONTENTS

1 **DESCRIPTION OF THE BOILER** ..... pag. 6
2 **INSTALLATION** ..... pag. 11
3 **CHARACTERISTICS** ..... pag. 22
4 **USE AND MAINTENANCE (including BENCHMARK)** ..... pag. 27
5 **FAULT FINDING** ..... pag. 35
6 **REPLACEMENT OF PARTS** ..... pag. 36
7 **EXPLODED VIEWS** ..... pag. 38

Important Information
IT IS A STATUTORY REQUIREMENT THAT ALL GAS APPLIANCES ARE INSTALLED BY COMPETENT PERSONS, IN ACCORDANCE WITH THE GAS SAFETY (INSTALLATION AND USE) REGULATIONS (CURRENT EDITION). The manufacturer's instructions must not be taken as overriding any statutory requirements, and failure to comply with these regulations may lead to prosecution.

No modifications to the appliance should be made unless they are fully approved by the manufacturer.

GAS LEAKS: DO NOT OPERATE ANY ELECTRICAL SWITCH, OR USE A NAKED FLAME. TURN OFF THE GAS SUPPLY AND VENTILATE THE AREA BY OPENING DOORS AND WINDOWS CONTACT THE GAS EMERGENCY SERVICE ON 0800111999.

benchmark
COLLECTIVE MARK
THE MARK OF QUALITY FOR THE INSTALLATION, COMMISSIONING AND SERVICING OF DOMESTIC HEATING AND HOT WATER SYSTEMS

Please refer to commissioning instructions for filling in the checklist at the back of this installation guide.
Note: All Gas Safe registered installers carry a ID Card.
You can check your installer is Gas Safe Registered by calling 0800 408 5577

SIME COMBINATION BOILERS
Installer checklist

Please remember to carry out the following checks after installation. This will achieve complete customer satisfaction, and avoid unnecessary service calls. A charge will be made for a service visit where the fault is not due to a manufacturing defect.

- Has a correct by-pass been fitted and adjusted?
- Has the system and boiler been flushed?
- Is the system and boiler full of water, and the correct pressure showing on the pressure gauge?
- Is the Auto Air Vent open?
- **Has the pump been rotated manually?**
- Is the gas supply working pressure correct?
- Is the boiler wired correctly? (See installation manual).
- **Has the D.H.W. flow rate been set to the customer requirements?**
- Has the customer been fully advised on the correct use of the boiler, system and controls?
- **Has the Aqua Guard Filter been cleaned (see 4.5.2)?**
- Has the Benchmark Checklist in the use and maintenance section of this manual, been completed ?

1 DESCRIPTION OF THE BOILER

1.1 INTRODUCTION

MURELLE HE - MURELLE SYSTEM HE are premixed gas condensation thermal modules that employ a microprocessor-based technology to control and manage all the functions. All modules are compliant with European Directives 90/396/CE, 2004/108/CE, 2006/95/CE and 92/42/CE.
For optimum installation and operation, always follow the instructions provided in this manual.

The products manufactured and sold by Sime do not contain any banned materials or substances (ie they comply with ISO9000:2000).

1.2 DIMENSIONS

1.2.1 MURELLE SYSTEM HE 12-20-25-30-35

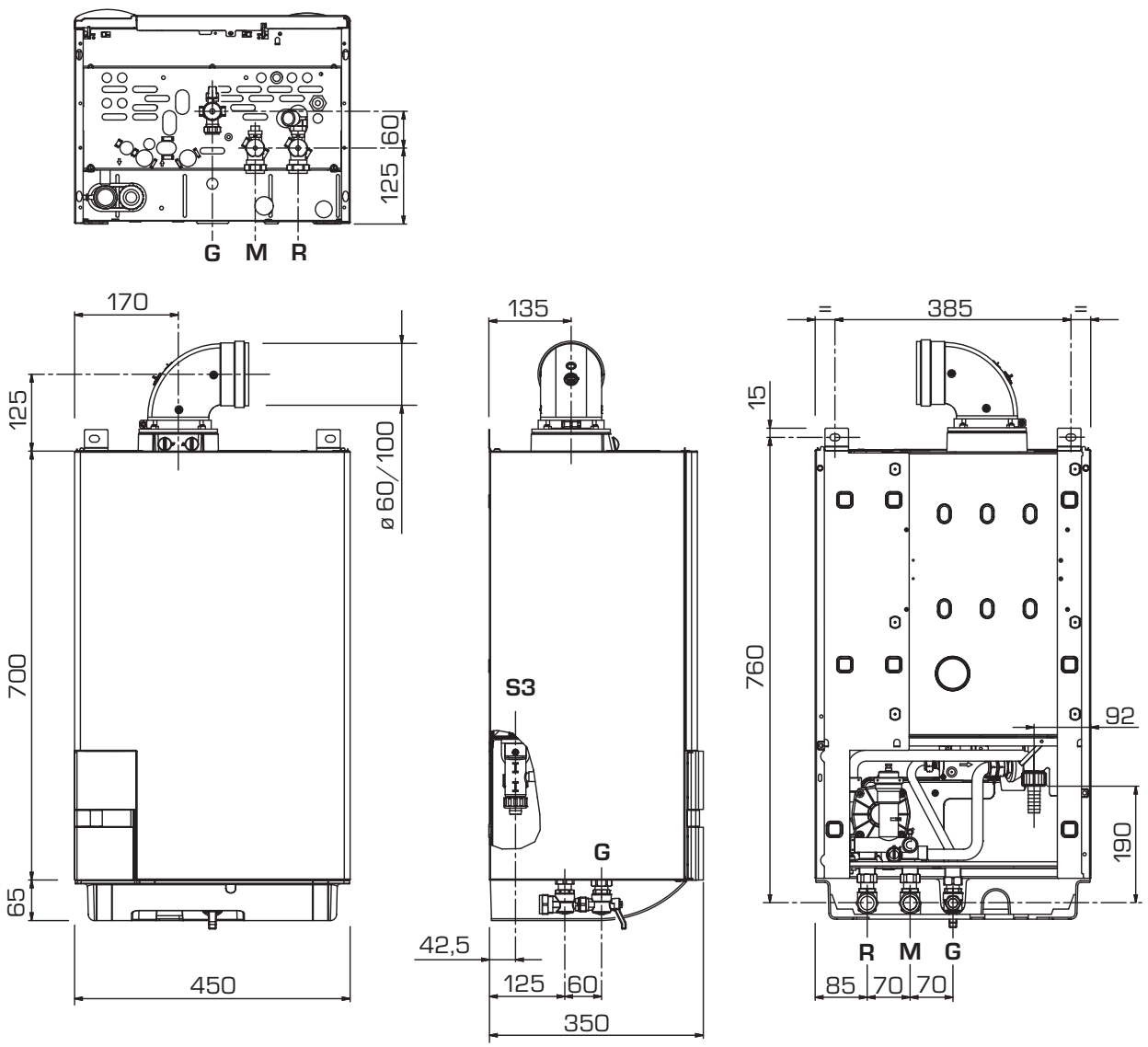

Fig. 1

1.2.2 MURELLE HE 25-30-35

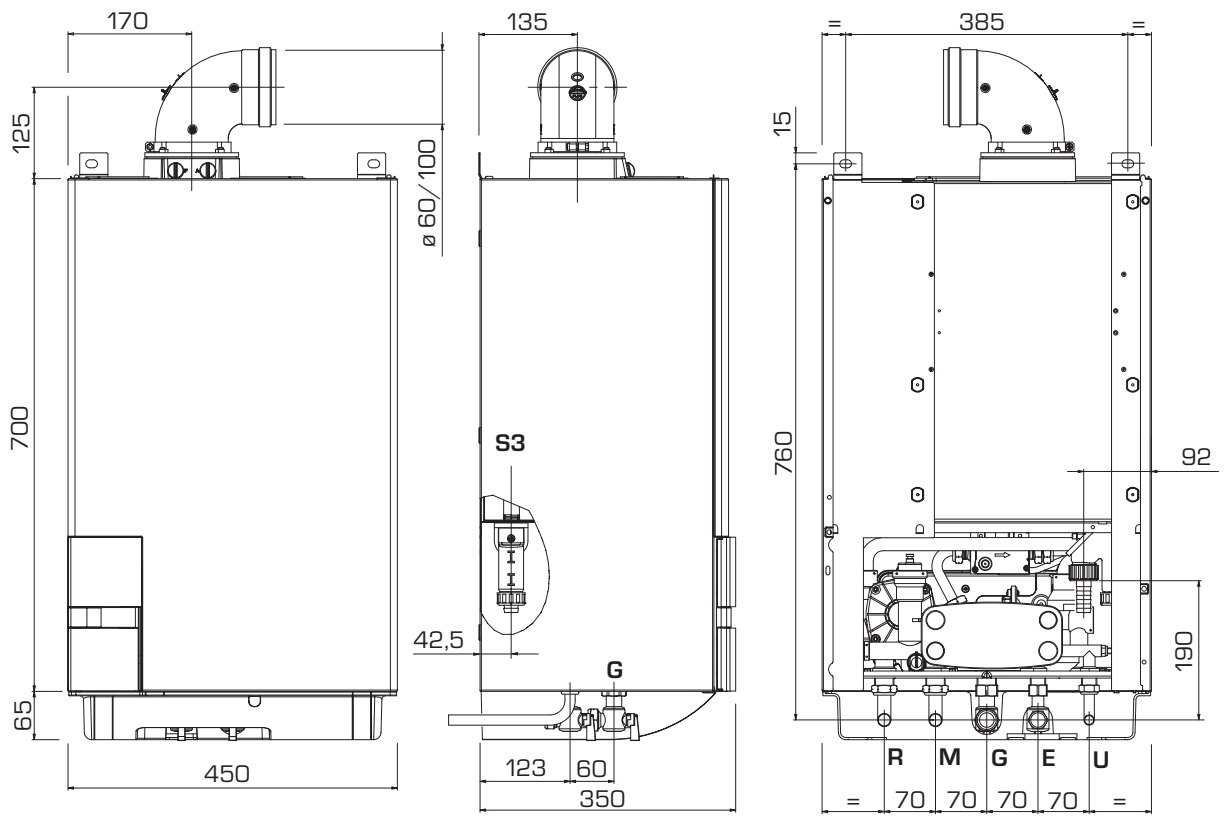

Fig. 1/a

TABLE 1 - Connections

R	**C.H. return**	22 mm	Compression
M	**C.H. flow**	22 mm	Compression
G	**Gas connection**	15 mm	Compression
E	**D.H.W. inlet**	15 mm	Compression
U	**D.H.W. outlet**	15 mm	Compression
S3	**Condensation outlet ø 20**		

TABLE 2 - Minimum clearances

	For ventilation	For servicing
ABOVE THE APPLIANCE CASING	200 mm	300 mm
AT THE R.H.S.	15 mm	15 mm
AT THE L.H.S.	15 mm	15 mm
BELOW THE APPLIANCE CASING	200 mm	200 mm
IN FRONT OF THE APPLIANCE	350 mm	500 mm

1.3 TECHNICAL FEATURES

Models MURELLE		HE 25	HE 30	HE 35	System HE 12	System HE 20	System HE 25	System HE 30	System HE 35
Heat output									
Nominal (80-60°C)	kW	23.9	28.9	34.1	11.7	19.0	23.9	28.9	34.1
Nominal (50-30°C)	kW	26.2	31.6	37.2	12.8	20.9	26.2	31.6	37.2
Reduced G20 (80-60°C)	kW	4.7	5.9	7.9	2.8	4.2	4.7	5.9	7.9
Reduced G20 (50-30°C)	kW	5.4	6.6	8.8	3.2	4.8	5.4	6.6	8.8
Reduced G31 (80-60°C)	kW	7.5	7.6	8.7	7.5	7.5	7.5	7.6	8.7
Reduced G31 (50-30°C)	kW	8.5	8.5	9.6	8.5	8.5	8.5	8.5	9.6
Heat input									
Nominal	kW	24.5	29.5	34.8	12.0	19.5	24.5	29.5	34.8
Reduced G20/G31	kW	5.0/8.0	6.2/8.0	8.2/9.0	3.0/8.0	4.5/8.0	5.0/8.0	6.2/8.0	8.2/9.0
Max/min useful yield (80-60°C)	%	94/97.5	95/98	96/98	94/97.5	94/97.5	94/97.5	95/98	96/98
Max/min useful yield (50-30°C)	%	107/107	107/107	107/107	107/107	107/107	107/107	107/107	107/107
Useful yield at 30% of the load (50-30°C)	%	107	107	107	107	107	107	107	107
Termal efficiency (CEE 92/42 directive)		★★★★	★★★★	★★★★	★★★★	★★★★	★★★★	★★★★	★★★★
Losses after shutdown to 50°C (EN 483)	W	85	90	95	80	85	85	90	95
Supply voltage	V-Hz	230-50	230-50	230-50	230-50	230-50	230-50	230-50	230-50
Adsorbed power consumption	W	125	130	140	110	120	125	130	140
Electrical protection grade	IP	X4D	X4D	X4D	X4D	X4D	X4D	X4D	X4D
C.H. setting range	°C	20/80	20/80	20/80	20/80	20/80	20/80	20/80	20/80
Water content boiler	l	4.9	5.5	6.0	4.4	5.0	5.0	5.6	6.1
Maximum water head	bar	3	3	3	3	3	3	3	3
Maximum temperature	°C	85	85	85	85	85	85	85	85
Capacity of the heating expansion vessel	l	8	10	10	8	8	8	10	10
Pressure of the heating expansion vessel	bar	1	1	1	1	1	1	1	1
D.H.W. setting range	°C	30/60	30/60	30/60	–	–	–	–	–
D.H.W. flow rate (EN 625)	l/min	11.1	13.6	16.1	–	–	–	–	–
Continuous D.H.W. flow rate Δt 30°C	l/min	11.4	13.8	16.3	–	–	–	–	–
Continuous D.H.W. flow rate Δt 35°C	l/min	9.8	11.8	14.0	–	–	–	–	–
Minimum D.H.W. flow rate	l/min	2	2	2	–	–	–	–	–
D.H.W. pressure min/max	bar	0.2/7.0	0.2/7.0	0.2/7.0	–	–	–	–	–
D.H.W. pressure min. nom. power	bar	0.5	0.65	0.8	–	–	–	–	–
Exhaust fumes temperature at max flow rate (80-60°C)	°C	70	70	70	70	70	70	70	70
Exhaust fumes temperature at min. flow rate (80-60°C)	°C	65	65	65	65	65	65	65	65
Exhaust fumes temperature at max flow rate (50-30°C)	°C	40	40	40	40	40	40	40	40
Exhaust fumes temperature at min. flow rate (50-30°C)	°C	35	35	35	35	35	35	35	35
Smokes flow min/max	kg/h	9/42	11/50	14/60	5/21	8/33	9/42	11/50	14/60
CO_2 at max/min flow rate G20	%	9.0/9.0	9.0/9.0	9.0/9.0	9.0/9.0	9.0/9.0	9.0/9.0	9.0/9.0	9.0/9.0
CO_2 at max/min flow rate G31	%	10.0/10.0	10.0/10.0	10.0/10.0	10.0/10.0	10.0/10.0	10.0/10.0	10.0/10.0	10.0/10.0
CE certification	n°	1312BS5039							
Category		II2H3P							
Type		B23P-53P/C13-33-43-53-83							
NOx emission class		5 (< 30 mg/kWh)							
Weight when empty	kg	43	57	69	31	42	42	56	68
Main burner nozzle									
Quantity nozzles	n°	1	1	1	1	1	1	1	1
G20 nozzle diameter	ø	5.0/3.7	7.0/5.0	8.5/5.2	4.0/3.1	5.0/3.7	5.0/3.7	7.0/5.0	8.5/5.2
Consumption at maximum/minimum flow rate									
Maximum G20	m^3/h	2.59	3.12	3.68	1.27	2.06	2.59	3.12	3.68
Minimum G20	m^3/h	0.53	0.66	0.87	0.32	0.48	0.53	0.66	0.87
Maximum G31	kg/h	1.90	2.29	2.70	0.93	1.51	1.90	2.29	2.70
Minimum G31	kg/h	0.62	0.62	0.70	0.62	0.62	0.62	0.62	0.70
Gas supply pressure G20/G31	mbar	20/37	20/37	20/37	20/37	20/37	20/37	20/37	20/37

1.4 FUNCTIONAL DIAGRAM

MURELLE HE 25-30-35

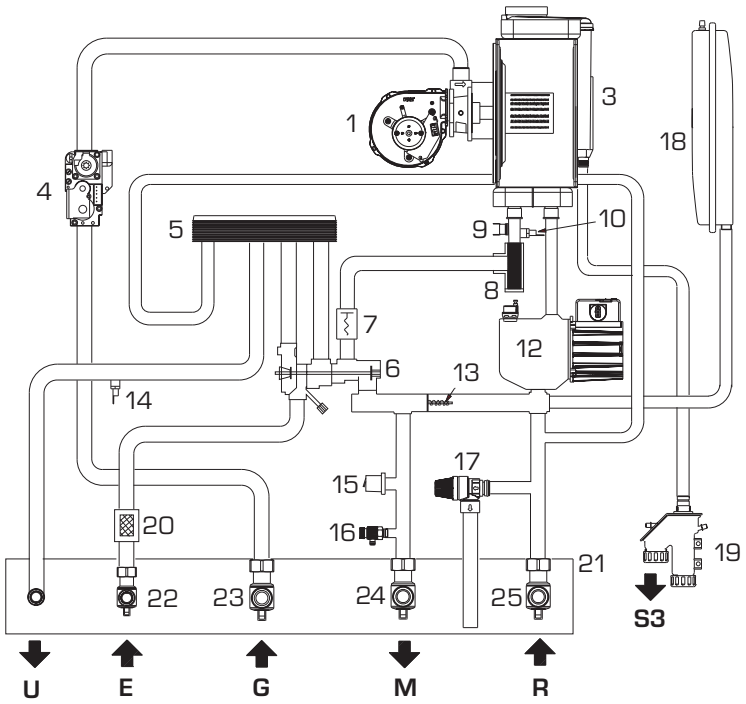

KEY
1 Fan
3 Primary exchanger
4 Gas valve
5 D.H.W. heat exchanger
6 Diverter valve
7 Water flow meter
8 Aqua Guard Filter System
9 Safety thermostat 100°C
10 C.H. sensor (SM)
12 Pump with air release vent
13 Automatic bypass
14 D.H.W. (SS) sensor
15 Pressure transducer
16 Drain vent
17 3 BAR safety valve
18 Expansion vessel
19 Condensate trap
20 D.H.W. filter
21 —
22 Hot water inlet isolation valve
23 Gas Isolation valve
24 CH flow isolation valve
25 CH return isolation valve

MURELLE SYSTEM HE 12-20-25-30-35

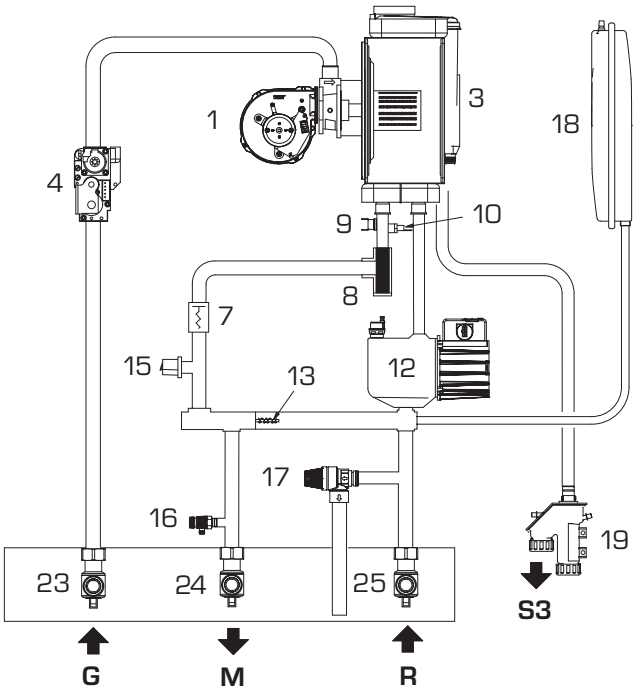

CONNECTIONS
R C.H. return
M C.H. flow
G Gas connection
E D.H.W. inlet
U D.H.W. outlet
S3 Condensation outlet

Fig. 2

1.5 MAIN COMPONENTS

MURELLE HE 25-30-35

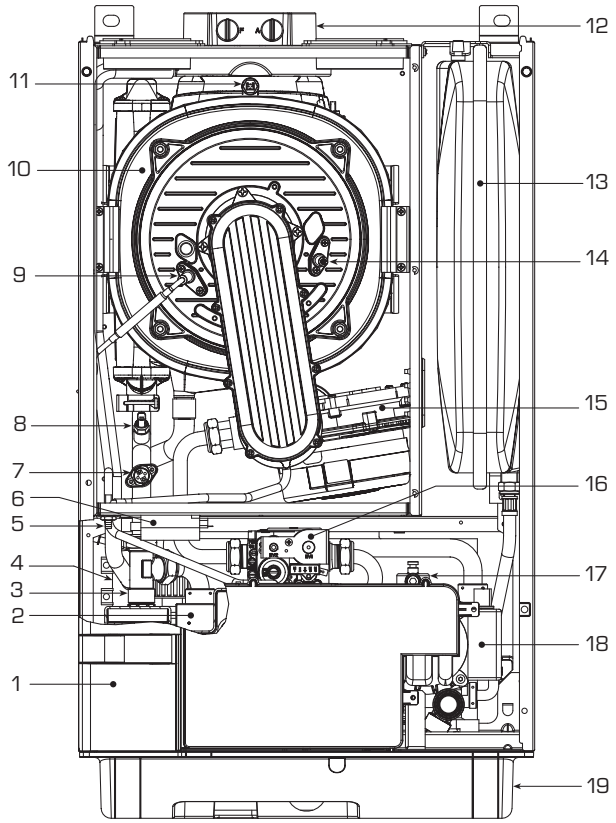

KEY
1 Control panel
2 Water flow meter
3 Aqua Guard Filter System
4 Condensate trap
5 Air pressure test point
6 Ignition transformer
7 Safety thermostat
8 C.H. sensor (SM)
9 Ignition electrode
10 Primary exchanger
11 Exhaust fumes sensor
12 Flue manifold
13 Expansion vessel
14 Ionisation electrode
15 Fan
16 Gas valve
17 Automatic vent
18 Pump
19 Valve cover
21 Manual air vent (see 4.7.1)

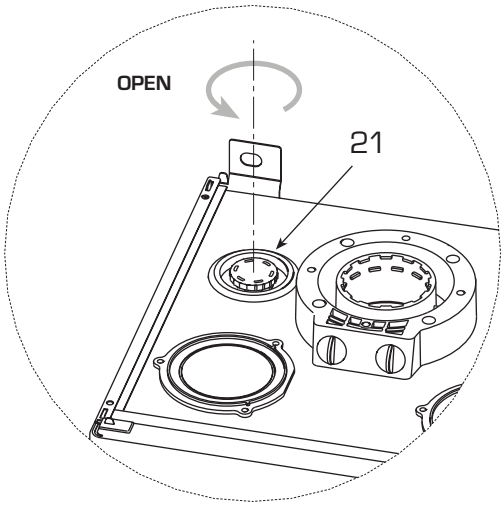

MURELLE SYSTEM HE 12-20-25-30-35

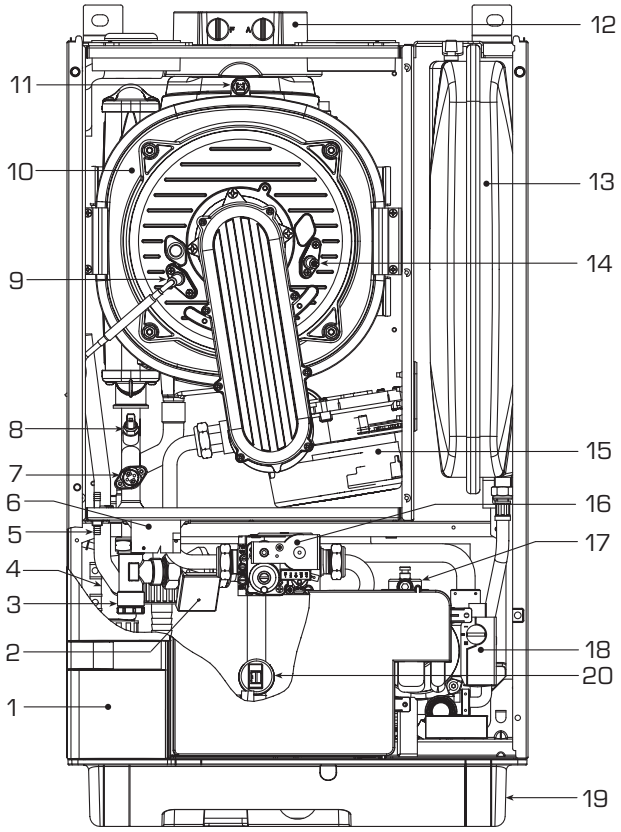

KEY
1 Control panel
2 Water flow meter
3 Aqua Guard Filter System
4 Condensate trap
5 Air pressure test point
6 Ignition transformer
7 Safety thermostat
8 C.H. sensor (SM)
9 Ignition electrode
10 Primary exchanger
11 Exhaust fumes sensor
12 Flue manifold
13 Expansion vessel
14 Ionisation electrode
15 Fan
16 Gas valve
17 Automatic vent
18 Pump
19 Valve cover
20 Pressure transducer
21 Manual air vent (see 4.7.1)

Fig. 3

2 INSTALLATION

The boiler must be installed in a fixed location and only by specialized and qualified person in compliance with all instructions contained in this manual. The installation of this boiler must be in accordance with the relevant requirements of the current Gas Safety (installation and use), the local building regulations, and and I.E.E. wiring regulations. Detailled recommendations for air supply are given in BS5440:2. The following notes are for general guidance: it is not necessary to have a purpose provided air vent in the room or compartment in which the appliance is installed.

2.1 ANTI-FREEZE FUNCTION

The boilers are equipped with anti-freeze function which activates the pump and the burner when the temperature of the water contained inside the appliance drops to below 6°C. The anti-freeze function ca only operate if:

- the boiler is correctly connected to the gas and electricity supply circuits;
- the boiler is constantly fed;
- the boiler ignition is not blocked;
- the essential components of the boiler are all in working order

In these conditions the boiler is protected against frost down to an environmental temperature of -5°C.

ATTENTION: In the case of installation in a place where the temperature drops below 0°C, the connection pipes must be protected.

2.2 FIXING THE WALL MOUNTING BRACKET

- Mark the position of the two wall mounting bracket fixing holes and the flue/air duct hole on the appropriate wall(s).
- Drill a top two fixing holes using a 10 mm masonry drill and fit the plastic plugs provided.
- Accurately measure the wall thickness, and note this dimension for later use.
- Secure the wall mounting bracket in position using the screws provided. Ensure that it is the correct way up, as indicated in fig. 4.

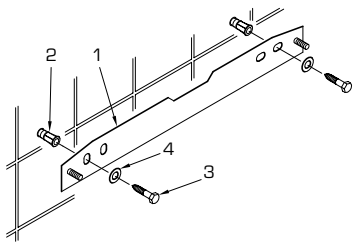

KEY
1 Wall mounting bracket
2 Plastic wall plug (2 Off)
3 Woodscrew (2 Off)
4 Washer (2 Off)

Fig. 4

2.3 CONNECTING UP SYSTEM

Before connecting the boiler it is recommended that the system be flushed in accordance to BS 7593, to eliminate any foreign bodies that may be detrimental to the operating efficiency of the appliance. When connecting up the boiler the clearances in fig 1 and 1/a should be respected. The boiler is supplied with a valve pack part number 5184817.

A safety valve set at 3 bar is fitted to the appliance, the discharge pipe provided should be extended to terminate safely away from the appliance and where a discharge would not cause damage to persons or property but would be detected. The pipe should be a minimum of 15 mm Ø and should be able to withstand boiling water, any should avoid sharp corners or upward pipe runs where water may be retained.

Gas Connection

The gas connection must be made using seamless steel or copper pipe, galvanized and with threaded joints provided with gaskets, excluding three-piece connections, except for initial and end connections. Where the piping has to pass through walls, a suitable insulating sleeve must be provided. When sizing gas piping, from the meter to the boiler, take into account both the volume flow rates (consumption) in m^3/h and the relative density of the gas in question.

The sections of the piping making up the system must be such as to guarantee a supply of gas sufficient to cover the maximum demand, limiting pressure loss between the gas meter and any apparatus being used to not greater than 1.0 mbar for family II gases (natural gas). An adhesive data badge is sited inside the front panel; it contains all the technical data identifying the boiler and the type of gas for which the boiler is arranged.

2.3.1 Connection of condensation water trap (fig. 5)

To ensure safe disposal of the condensate produced by the flue gases, reference should be made to BS6798:2000. The boiler incorporates a condensate trap which has a seal of 75mm, therefore no additional trap is required. The condensate should ideally be discharged internally into an internal waste pipe(washing machine/sink waste) or a soil pipe to avoid the risk of freezing. External pipe runs should be avoided, but if it is necessary, the pipework should be at least 32mm and protected from the risc of freezing with a waterproof insulation and the length kept to a minimum and not exceeding 3 m. termination should be into an external gully or purpose made soakaway.

NOTE: All pipework must have a continuous fall from the boiler and must be resistant to corrosion by condensate, copper or steel is NOT suitable. It should be noted that the connection of a condensate pipe to a drain may be subject to local building control requirements.

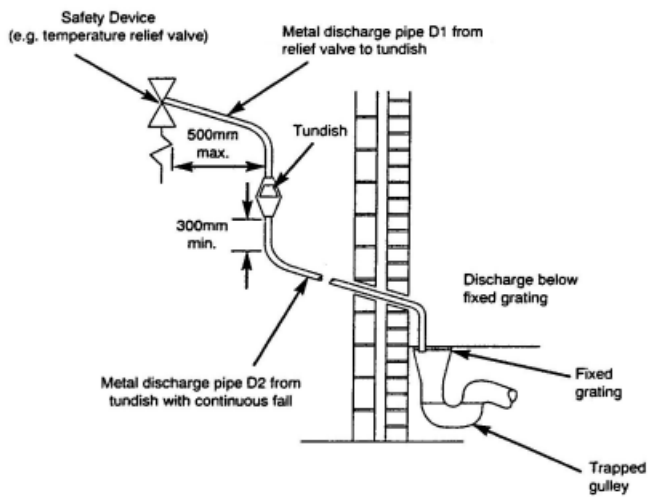

Valve outlet size	Minimum size of discharge pipe D1	Minimum size of discharge pipe D2 from tundish	Maximum resistance allowed, expressed as a length of straight pipe (i.e. no elbows or bends)	Resistance created by each elbow or bend
G 1/2	15mm	22mm 28mm 35mm	up to 9m up to 18m up to 27m	0.8m 1.0m 1.4m
G 3/4	22mm	28mm 35mm 42mm	up to 9m up to 18m up to 27m	1.0m 1.4m 1.7m
G 1	28mm	35mm 42mm 54mm	up to 9m up to 18m up to 27m	1.4m 1.7m 2.3m

Fig. 5

2.3.2 Requirements for sealed water systems MURELLE HE

The heating system design should be based on the following information:

a) The available pump head is given in fig. 16.
b) The burner starts when the C.H. flow reaches 400÷450 l/h. This safety condition is ensured by the flow switch.
c) The appliance is equipped with an internal by-pass that operates with system heads (H) greater than 3 m. The maximum flow through the by-pass is about 300 l/h. If thermostatic radiator valves are to be installed, at least one radiator should be without a thermostatic valve (usually the bathroom radiator).
d) A sealed system must only be filled by a competent person using one of the approved methods shown in fig. 5/a. The system design should incorporate the connections appropriate to one of these methods.

ALTERNATIVE METHODS OF FILLING A SEALED SYSTEM

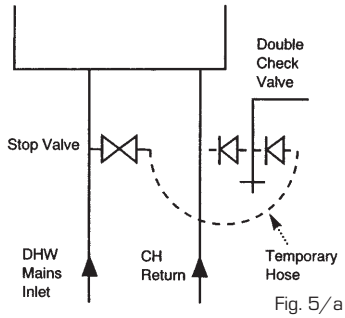

Fig. 5/a

2.3.3 Requirements for sealed water systems MURELLE SYSTEM HE

The heating system design should be based on the following information:

a) The available pump head is given in fig. 16.
b) The appliance is equipped with an internal by-pass that operates with system heads (H) greater than 3 m. The maximum flow through the by-pass is about 300 l/h. If thermostatic radiator valves are to be installed, at least one radiator should be without a thermostatic valve (usually the bathroom radiator).

2.4 CHARACTERISTICS OF FEEDWATER

- All recirculatory systems will be subject to corrosion unless an appropriate water treatment is applied. This means that the efficiency of the system will deteriorate as corrosion sludge accumulates within the system, risking damage to pump and valves, boiler noise and circulation problems.
- For optimum performance after installation this boiler and its associated central heating system must be flushed in accordance with the guidelines given in BS 7593 "Treatment of water in domestic hot water central heating systems".
- This must involve the use of a proprietary cleanser, such as Sentinel X300 or X400, or Fernox Superfloc. Full instructions are supplied with the products, but for immediate information please contact GE Betz (0151 420 9563) or Fernox (01799 550 811) directly.
- For long term protection against corrosion and scale, after flushing it is recommended that an inhibitor such as Sentinel X100, or Fernox MB-1 or Copal is dosed in accordance with the guidelines given in BS 7593.
  Failure to flush and add inhibitor to the system may invalidate the appliance warranty.
- It is important to check the inhibitor concentration after installation, system modification and at every service in accordance with the manufacturer's instructions. (Test kits are available from inhibitor stockists).
- At every service the Aquaguard Filter (4.5.2) should be checked and cleaned.

2.5 INSTALLATION OF COAXIAL DUCT (ø 60/100 - ø 80/125)

The axial suction and discharge pipes are supplied in a special kit (that can be purchased separately) along with assembly instructions.

IMPORTANT:

- **The insertion of each additional 90° bend with a diameter of 60/100 (code 8095850) reduces the available section by 1.5 meters.**
- **The insertion of each additional 90° bend with a diameter of 80/125 (code 8095870) reduces the available section by 2 meters.**
- **Each additional 45° curve installed a diameter of 60/100 (code 8095550) reduces the available length by 1.0 metres.**
- **Each additional 45° curve installed a diameter of 80/125 (code 8095970) reduces the available length by 1.0 metres.**

HORIZONTAL FLUES MUST BE LEVEL

NOTE: Before connecting accessories, it is always advisable to lubricate the internal part of the gaskets with silicon products. Avoid using oils and greases.

Model	Length of pipe ø 60/100			Length of pipe ø 80/125		
	H	V		H	V	
		Min	Max		Min	Max
SYSTEM HE 12	6 m	1.3 m	8 m	12 m	1.2 m	15 m
SYSTEM HE 20	6 m	1.3 m	8 m	12 m	1.2 m	15 m
SYSTEM HE 25 - HE 25	6 m	1.3 m	8 m	12 m	1.2 m	15 m
SYSTEM HE 30 - HE 30	5 m	1.3 m	7 m	10 m	1.2 m	13 m
SYSTEM HE 35 - HE 35	4 m	1.3 m	6 m	8 m	1.2 m	11 m

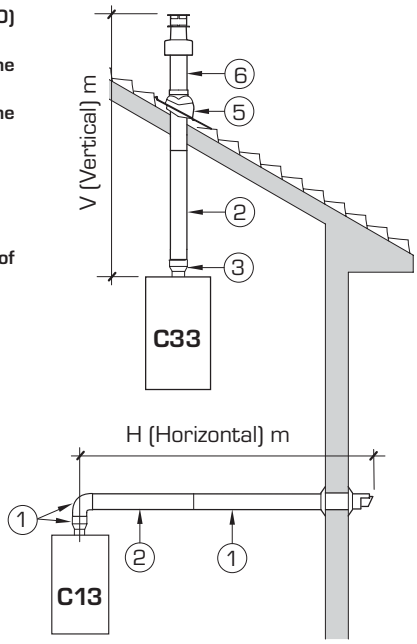

LIST OF ø 60/100 ACCESSORIES

1 Coaxial duct kit L. 790 code 8096250
2a Extension L. 1000 code 8096150
2b Extension L. 500 code 8096151
3 Vertical extension L. 140 with coupling code 8086950
5 Tile for joint code 8091300
6 Terminal for roof exit L. 1285 code 8091205

LIST OF ø 80/125 ACCESSORIES

1 Coaxial duct kit L. 785 code 8096253
2a Extension L. 1000 code 8096171
2b Extension L. 500 code 8096170
3 Adapter for ø 80/125 code 8093150
5 Tile for joint code 8091300
6 Terminal for roof exit L. 1285 code 8091205

Fig. 6

The diagrams of fig. 6 illustrate some examples of different types of discharge modalities allowed and the maximum lengths that can be reached.

2.6 INSTALLATION OF SEPARATE DUCTS (ø 80)

The kit with dedicated pipes enables to separate the exhaust fumes pipes from the air suction pipes (Fig. 7):

- The kit with dedicated ø 80 pipes, code 8089912, includes a SUCTION DIAPHRAGM THAT IS NOT used for these models. To be able to use the air tap, cut its base with a tool (A) and assemble it (B).

The maximum overall length, resulting from the sum of all the suction and discharge pipes, is determined by the load losses of the single connected accessories and should not exceed 10 mm H_2O (version HE 12) - 13 mm H_2O (version HE 20) - 15 mm H_2O (version HE 25-30-35) (ATTENTION: the total length of each pipe should not exceed 50 m, even if the total loss is below the maximum applicable loss.)

See **Table 3** for information on the load losses of single accessories and the example

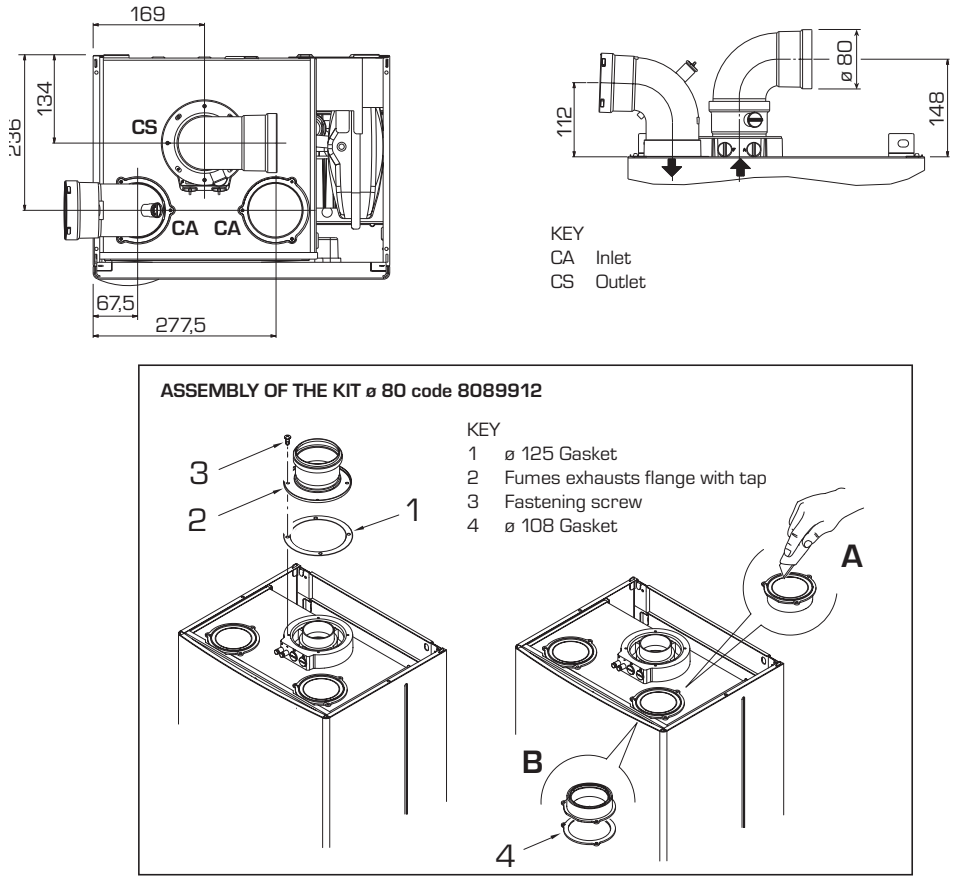

Fig. 7

TABLE 3 - ACCESSORIES ø 80

Accessories ø 80	Total head loss (mm H_2O)									
	HE 12		**HE 20**		**HE 25**		**HE 30**		**HE 35**	
	Inlet	Outlet	Inlet	Outlet	Inlet	Outlet	Inlet	Outlet	Inlet	Outlet
Coaxial duct kit	–	–	–	–	–	–	–	–	–	–
90° elbow MF	0.05	0.10	0.15	0.20	0.20	0.25	0.25	0.30	0.30	0.40
45° elbow MF	0.05	0.05	0.10	0.10	0.15	0.15	0.20	0.20	0.25	0.25
Extension L. 1000 (horizontal)	0.05	0.05	0.10	0.10	0.15	0.15	0.20	0.20	0.25	0.25
Extension L. 1000 (vertical)	0.05	0.05	0.10	0.10	0.15	0.15	0.20	0.20	0,25	0.25
Wall terminal	0.05	0.15	0.05	0.20	0.10	0.25	0.10	0.35	0.15	0.50
Wall coaxial exhaust *										
Roof outlet terminal *	0.25	0.05	0.50	0.05	0.80	0.10	1.10	0.15	1.50	0.20

* **The loss of the accessorie in aspiration concludes the collector code 8091400/01**

Example of allowable installation **"HE 25"** calculation in that the sum of the head losses of the single fittings is less than 15.0 mm H_2O:

	Inlet		**Outlet**	
9 m horizontal pipe ø 80 x 0.15	1.35		–	
9 m horizontal pipe ø 80 x 0.15	–		1.35	
n° 2 90° elbows ø 80 x 0.20	0.40		–	
n° 2 90° elbows ø 80 x 0.25	–		0.50	
n° 1 terminal ø 80	0.10		0.25	
Total head loss	1.85	+	2.10	= **3.95 mm H_2O**

Fig. 8

of Fig. 8 for information on how to calculate load losses.

2.6.1 Separate ducts kit

The diagrams of Figure 9 show a few examples of the permitted exhausts configurations.

2.7 POSITIONING THE OUTLET TERMINALS

The outlet terminals for forced-draught appliances may be located in the external perimeter walls of the building.
To provide some indications of possible solutions, **Table 4** gives the minimum distances to be observed, with reference to the type of building shown in fig. 10.

2.8 ELECTRICAL CONNECTION

The boiler is supplied with an electric cable. Should this require replacement, it must be purchased exclusively from SIME.
The electric power supply to the boiler must be 230V - 50Hz single-phase through a fused main switch, with at least 3 mm spacing between contacts. Respect the L and N polarities and the earth connection.
NOTE: SIME declines all responsibility for

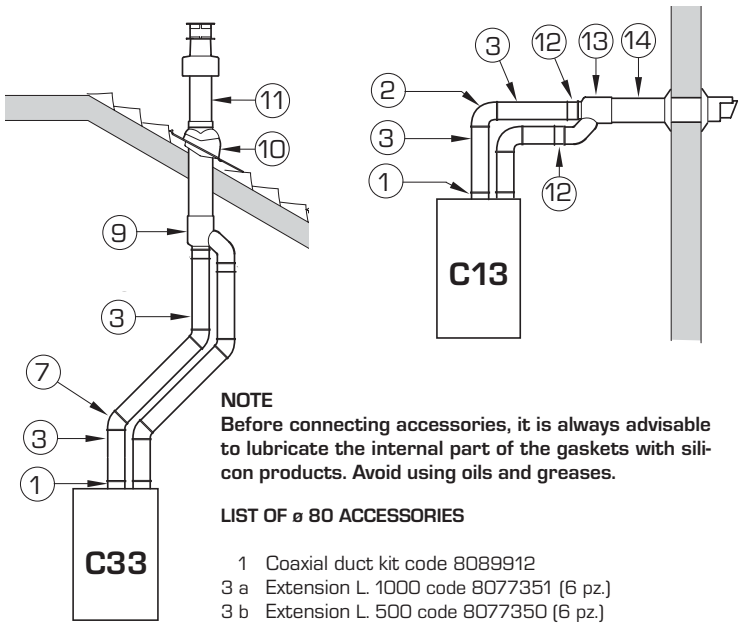

NOTE
Before connecting accessories, it is always advisable to lubricate the internal part of the gaskets with silicon products. Avoid using oils and greases.

LIST OF ø 80 ACCESSORIES

1	Coaxial duct kit code 8089912
3 a	Extension L. 1000 code 8077351 (6 pz.)
3 b	Extension L. 500 code 8077350 (6 pz.)
7 a	Additional 45° MF curve code 8077451(6 pz.)
7 b	Additional 90° MF curve code 8077450 (6 pz.)
9	Manifold, code 8091400
10	Tile for joint code 8091300
11	Terminal for roof exit L. 1381 code 8091204
12	——
13	Union suction/exhaust code 8091401
14	Coaxial exhaust ø 80/125 L. 885 code 8091210

Fig. 9

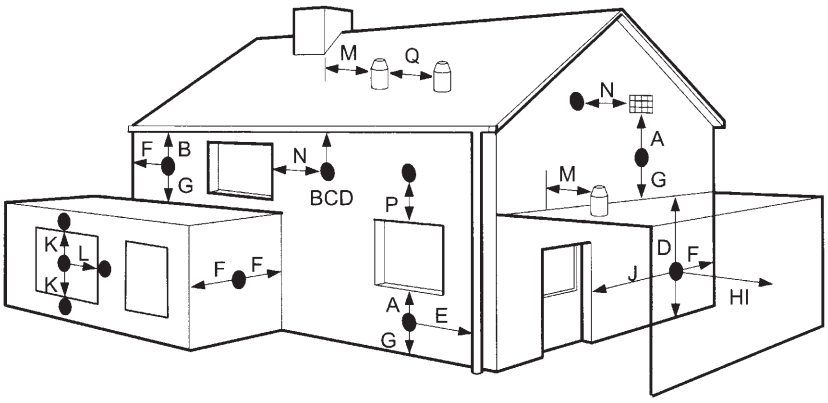

TABLE 4

Terminal position		Minimum spacing	
A	Directly below an openable window, air vent or any other ventilation opening	300 mm	12 in
B	Below guttering, drain pipes or soil pipes	75 mm	3 in
C/D	Below eaves, balconies or carport roof	200 mm	8 in
E	From vertical drain pipes or soil pipes	75 mm	3 in
F	From internal or external corners	300 mm	12 in
G	Above adjacent ground, roof or balcony level	300 mm	12 in
H	From a boundary or surface facing the boiler	600 mm	24 in
I	From a terminal facing the terminal	1,200 mm	48 in
J	From an opening in the carport (eg door, window into dwelling)	1,200 mm	48 in
K	Vertically from a terminal on the same wall	1,500 mm	60 in
L	Horizontally from a terminal on the same wall	300 mm	12 in
M	Horizontally from a vertical terminal to a wall	300 mm	12 in
N	Horizontally from an openable window or other opening	300 mm	12 in
P	Above an openable window or other opening	300 mm	12 in
Q	From an adjacent vertical terminal	600 mm	24 in

- If the terminal discharges into a pathway or passageway check that combustion products will not cause nuisance and that the terminal will not obstruct the passageway.
- Where the lowest part of the terminal is fitted less than 2 m (78 in) above ground, above a balcony or above a flat roof to which people have access, the terminal MUST be protected by a purpose designed guard. Terminal guards are available from Quinnell, Barrett, and Quinnell, Old Kent Road, London. State model C2, (G.C. Part No 382946).
- Where the terminal is fitted within 850 mm (34 in) of a plastic or painted gutter, or 450 mm (18 in) of painted eaves, an aluminium shield at least 1,500 mm (59 in) long must be fitted to the underside of the painted surface.
- The air inlet/outlet flue duct MUST NOT be closer than 25 mm (1 in) to combustible material.
- In certain weather conditions the terminal may emit a plume of steam. This is normal but positions where this would cause a nuisance should be avoided.

Fig. 10

injury or damage to persons, animals or property, resulting from the failure to provide for proper earthing of the appliance.

2.8.1 Room thermostat connection

The heat demand can be by a "clean contact" (conforming to EN607301), room stat or programmer connected to the "TA" connection (**fig. 11-11/a**), CN6 terminals 7 & 8 after removing the link

or

A 230v switched demand to terminal 14 CN7 and removal of the "TA" link on terminals 7 & 8 on CN6.

Note: a permanent power supply must be maintained.

2.8.2 Climatic regulator CR 53 connection (optional)

The boiler is designed for connectio to a climatic regulator, supplied on request (code 8092227), for the management of a heating circuit. The electronic card will continue to manage information visualisation, the setting of the sanitary set and the heating of the second circuit, and the boiler parameters by means of the keys on the control panel. For installation and use of the climatic regulator, follow the instructions included in the packaging.
NOTE: Reset parameter 10 to 2 (PAR 10 = 2).

2.8.3 Remote control CR 73 connection (optional)

The boiler is designed for connection to a remote control unit, supplied on request (code 8092226).
The remote control unit CR 73 allows for complete remote control of the boiler, except release of the boiler. The boiler display will show the following message:

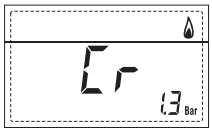

For installation and use of the remote control, follow the instructions in the package.
NOTE: Ensure PAR 10 set to 1 (PAR 10 = 1).

2.8.4 External sensor connection

The boiler is designed for connection to an external temperature sensor, supplied on request (code 8094101) in conjunction with remote control (code 8092226), which can automatically regulate the temperature value of the boiler output according to the external temperature.
For installation, follow the instruction in the package.
It is possible to make corrections to the values read by the drill acting on the **PAR 11**.

2.8.5 Use with different electronic systems

Some examples are given below of boiler systems combined with different electronic systems. Where necessary, the parameters to be set in the boiler are given. The electrical connections to the boiler refer to the wording on the diagrams (figg. 11-11/a).
The zone valve control starts at every demand for heating of the zone 1 (it is from part of the TA1 or the CR).

Description of the letters indicating the components shown on the system diagrams:

M	C.H. flow
R	C.H. return
CR	Remote control CR 73
SE	External temperature sensor
TA 1-2-3-4	Zone room thermostat
CT 1-2	Zone room thermostat internal time clock
VZ 1-2	Zone valve
RL 1-2-3-4	Zone relay
SI	Hydraulic separator
P 1-2-3-4	Zone pump
IP	Floor system
EXP	Expansion card (code 8092233)
VM	Three-way mixer valve

1 BASIC SYSTEM
SYSTEM WITH A DIRECT ZONE AND ROOM THERMOSTAT, OR WITH A CLIMATIC REGULATOR CR 53 (Code 8092227) OR WITH REMOTE CONTROL CR 73 (Code 8092226) AND EXTERNAL SENSOR (Code 8094101)

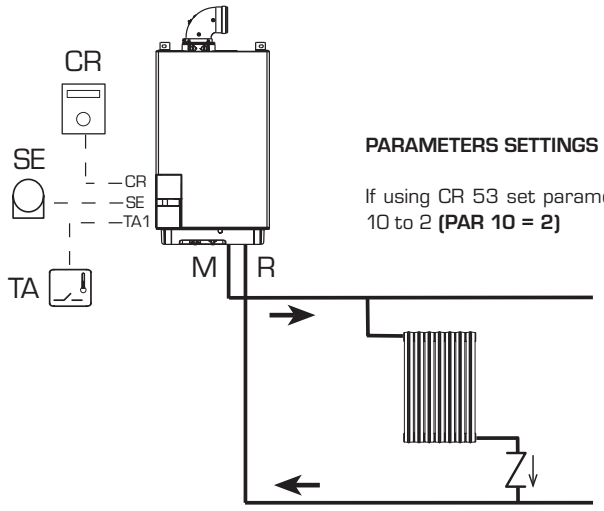

PARAMETERS SETTINGS

If using CR 53 set parameter 10 to 2 **(PAR 10 = 2)**

2 BASIC SYSTEM

MULTI-ZONE SYSTEM WITH PUMP, ROOM THERMOSTAT AND EXTERNAL SENSOR (Code 8094101)

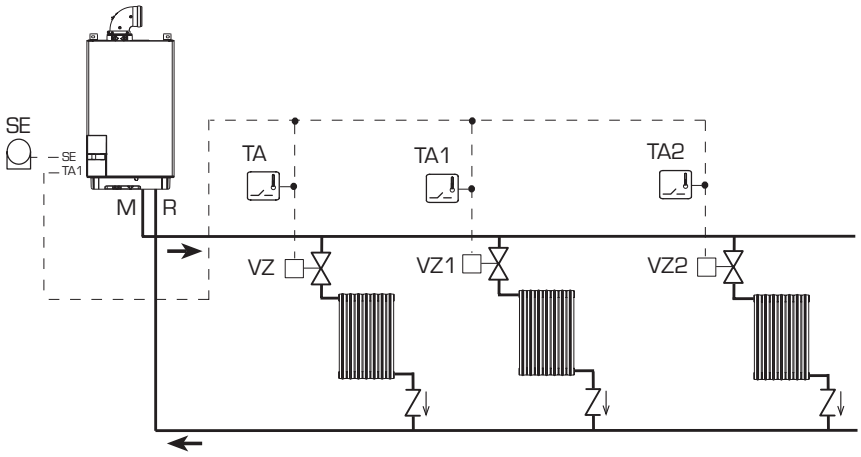

3 BASIC SYSTEM

MULTI-ZONE SYSTEM WITH PUMP, ROOM THERMOSTAT AND EXTERNAL SENSOR (Code 8094101)

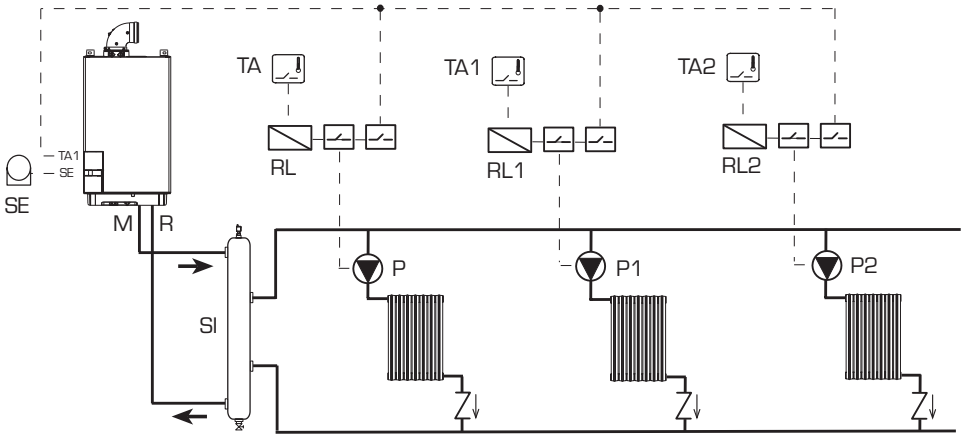

4 BASIC SYSTEM

MULTI-ZONE SYSTEM WITH VALVE, ROOM THERMOSTAT, REMOTE CONTROL CR 73 (Code 8092226) AND EXTERNAL SENSOR (Code 8094101)

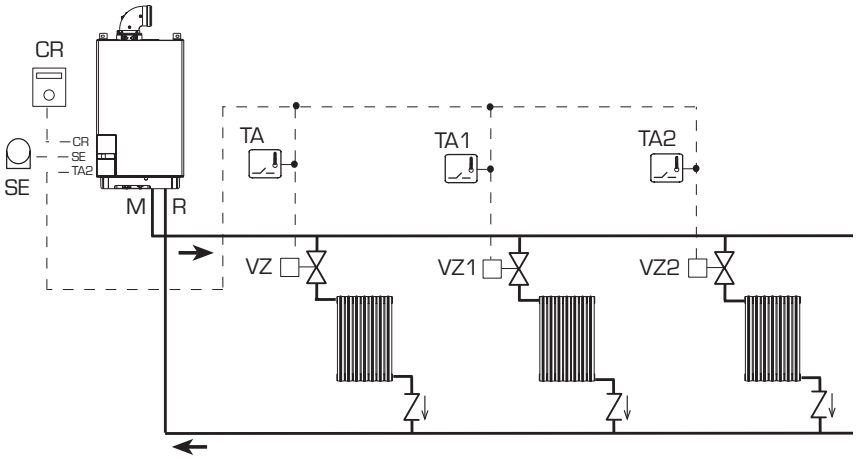

PARAMETERS SETTINGS

To use the remote control (CR) as remote control panel for the boiler rather than as room reference, set:
PAR 7 = 0

5 BASIC SYSTEM
MULTI-ZONE SYSTEM WITH VALVE, ROOM THERMOSTAT, REMOTE CONTROL CR 73 (Code 8092226) AND EXTERNAL SENSOR (Code 8094101)

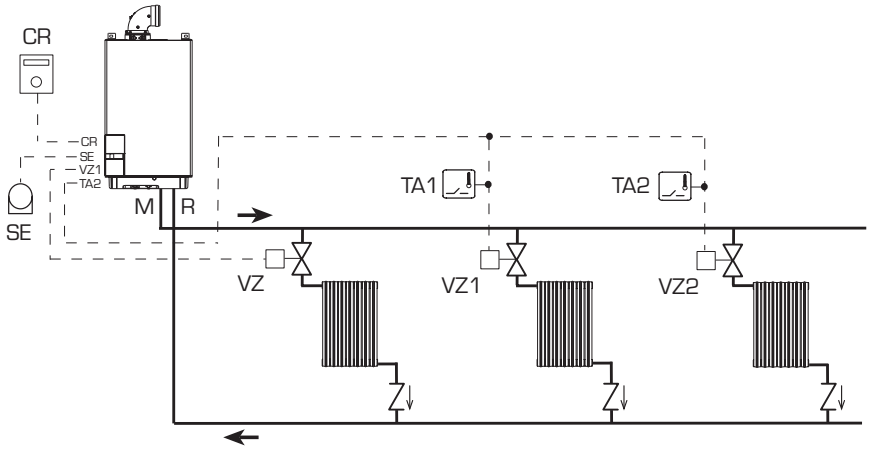

PARAMETER SETTING

To use the remote control (CR) as room reference for a zone, set: **PAR 7 = 1**

Set the opening time of the zone valve VZ: **PAR 33 = "OPENING TIME"**

6 BASIC SYSTEM
MULTI-ZONE SYSTEM WITH PUMP, ROOM THERMOSTAT, REMOTE CONTROL CR 73 (Code 8092226) AND EXTERNAL SENSOR (Code 8094101)

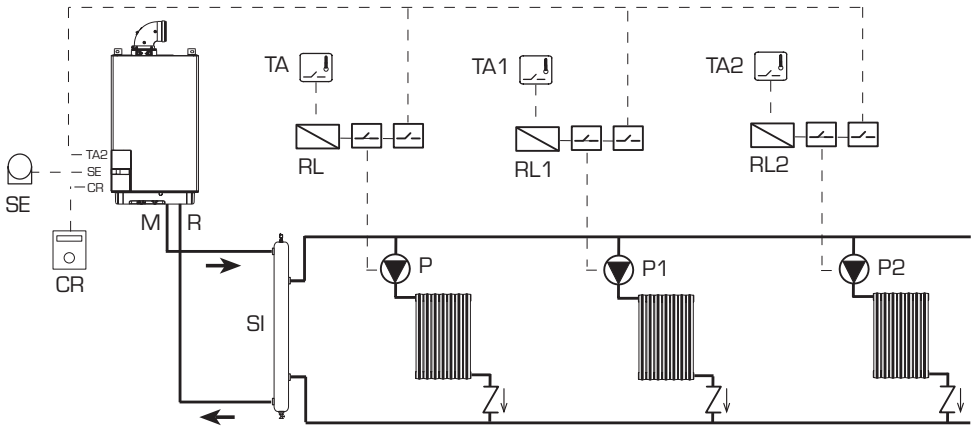

PARAMETER SETTING

To use the remote control (CR) as room reference for a zone, set: **PAR 7 = 1**

7 SYSTEM WITH DOUBLE TEMPERATURE OUTPUT
MULTI-ZONE SYSTEM WITH VALVE, ROOM THERMOSTAT INTERNAL TIME CLOCK AND EXTERNAL SENSOR (Code 8094101)

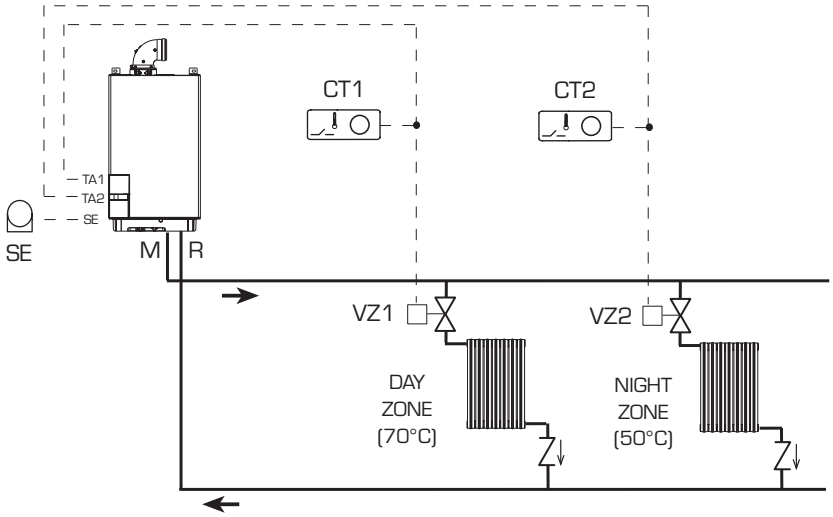

DURING NIGHT TIME THE BOILER USES A LOWER OUTPUT TEMPERATURE IF DIFFERENT TIMES HAVE BEEN SET FOR DAY AND NIGHT AREAS:

- **with external sensor,** set the climatic curve of the day zone 1 with PAR 25 and the night zone at PAR 26.
- **without external sensor,** gain access to setting the day zone 1 by pressing the key and change the value with the keys + and −. Gain access to setting the night zone by pressing the key twice and changing the value with the keys + and −.

8 SYSTEM WITH DOUBLE TEMPERATURE OUTPUT
MULTI-ZONE SYSTEM WITH PUMP, ROOM THERMOSTAT INTERNAL TIME CLOCK AND EXTERNAL SENSOR (Code 8094101)

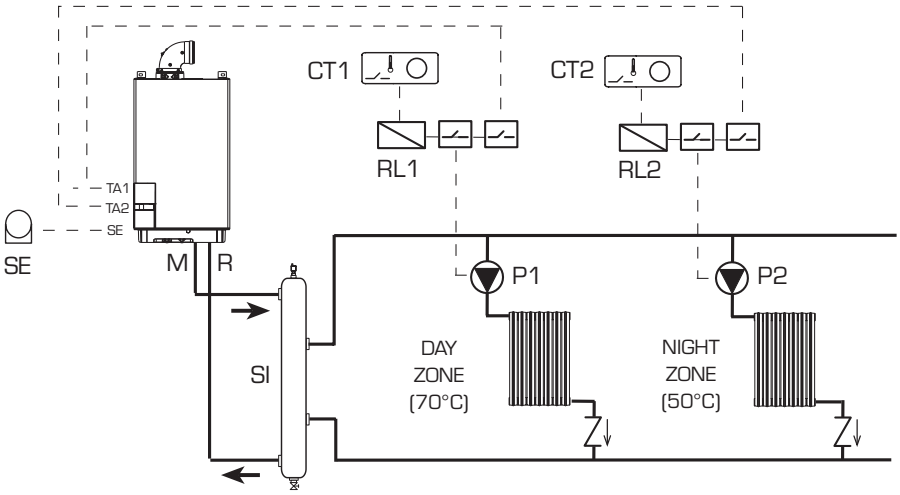

9 SYSTEM WITH MIXER VALVE
SYSTEM WITH ONE DIRECT ZONE AND ONE MIXED ZONE

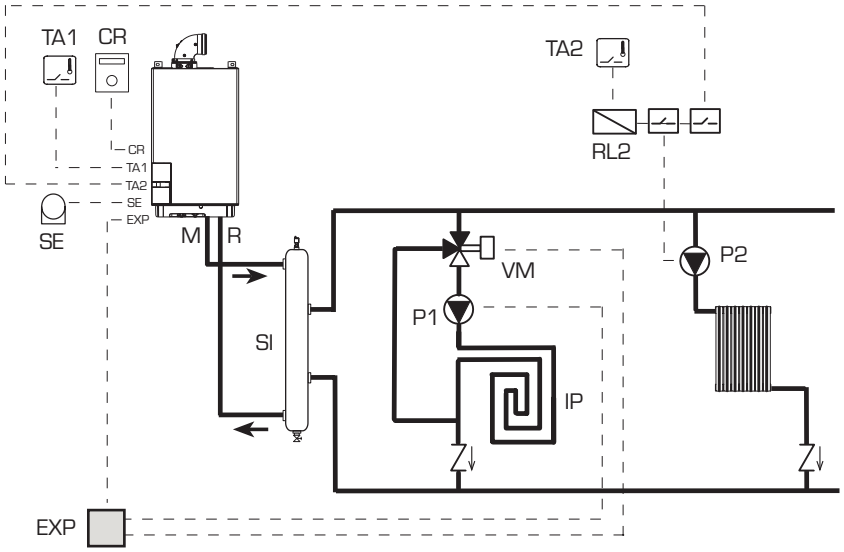

PARAMETERS SETTINGS

To use the remote control (CR) as remote control panel for the boiler rather than as room reference, set:
PAR 7 = 0

10 SYSTEM WITH MIXER VALVE
SYSTEM WITH TWO DIRECT ZONES AND TWO MIXED ZONES

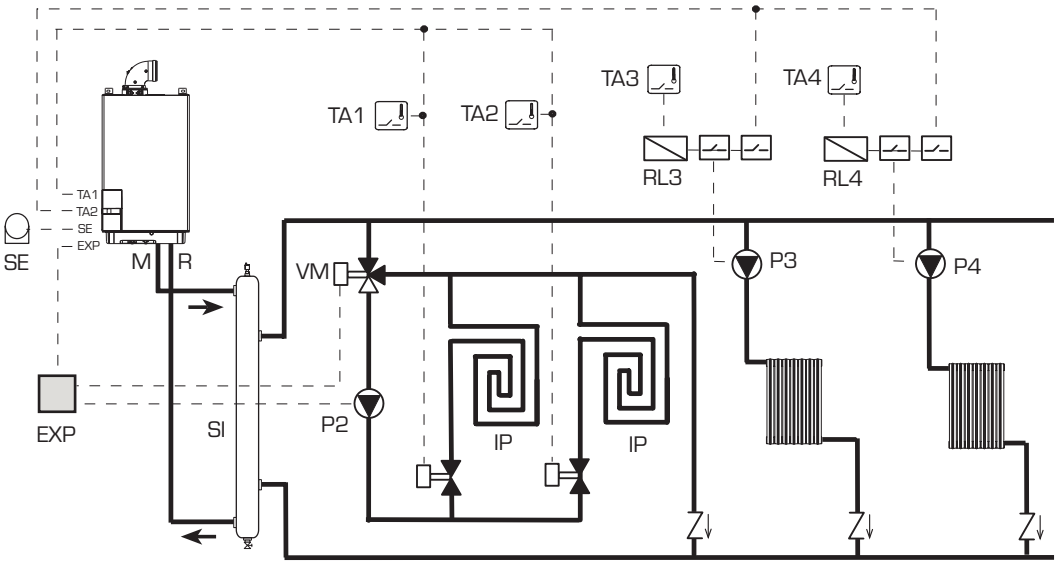

2.9 BOILER ELECTRICAL "MURELLE SYSTEM HE 12-20-25-30-35"

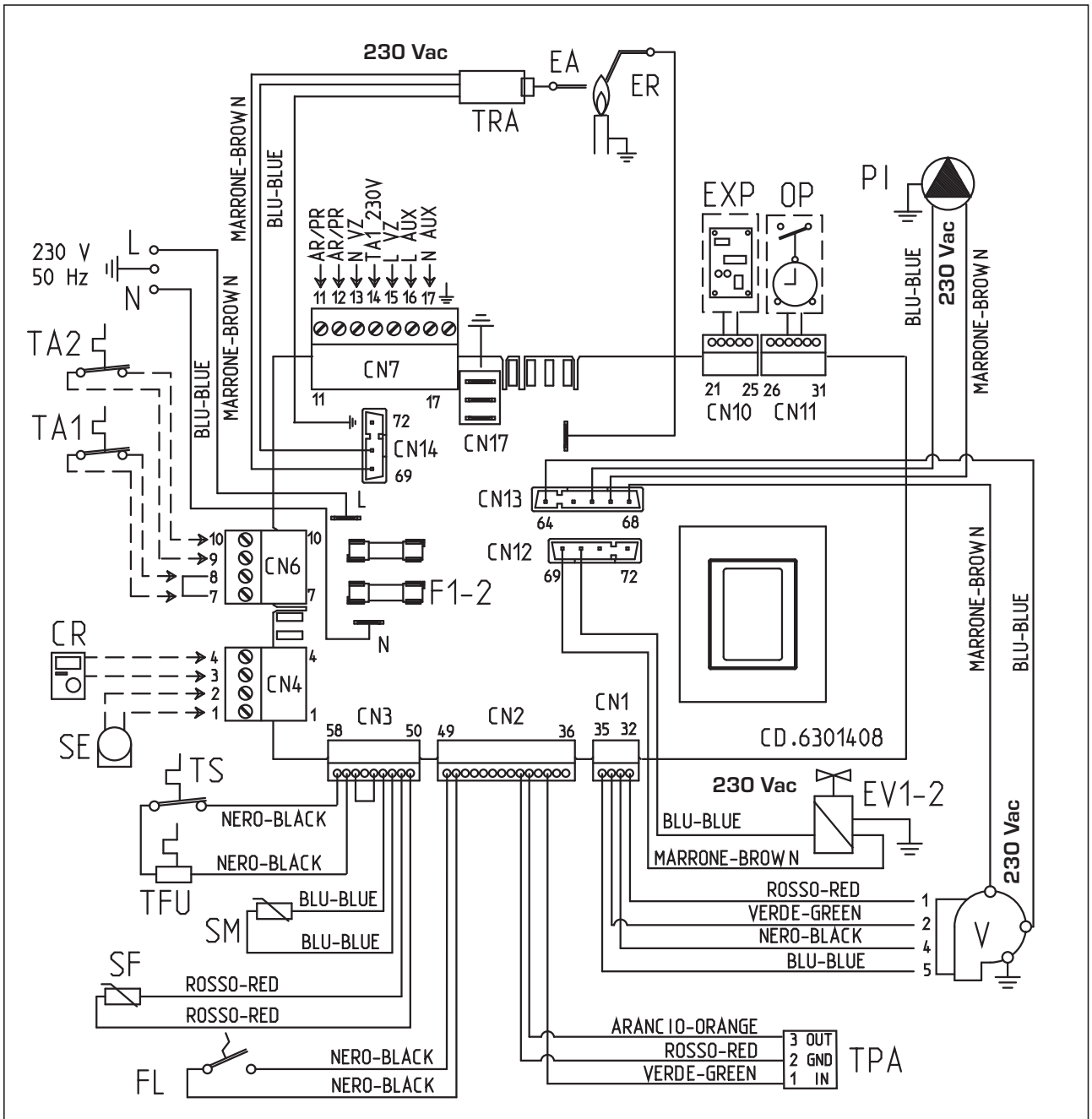

KEY

F1-2	Fuse (4 AT)
TRA	Ignition transformer
PI	Pump
V	Fan
EA	Ignition electrode
ER	Detection electrode
EV1-2	Gas valve coil
TS	Safety thermostat
SF	Exhaust fumes probe
TFU	Thermal fuse
SM	Heating sensor
FL	Water flow switch
TPA	Pressure transducer
TA1	Zone 1 environment thermostat
TA2	Zone 2 environment thermostat
CR	Remote control CR 73 (optional)
SE	External sensor (optional)
OP	Internal time clock (optional)
EXP	Expansion card
PR/AR	Recirculation pump control or remote alarm
VZ	Zone valve
AUX	Auxiliary connection

NOTE: Connect TA1 to the clamps 7-8 after having removed the bridge.

CONNECTOR SPARE PART CODES:

CN1	code 6316212
CN2	code 6316214
CN3	code 6316210
CN4	code 6316203
CN6	code 6316202
CN7	code 6316204
CN10	cod. 6316227
CN11	cod. 6316226
CN12	code 6299991
CN13	code 6316212
CN14	code 6316213

Fig. 11

2.10 BOILER ELECTRICAL "MURELLE HE 25-30-35"

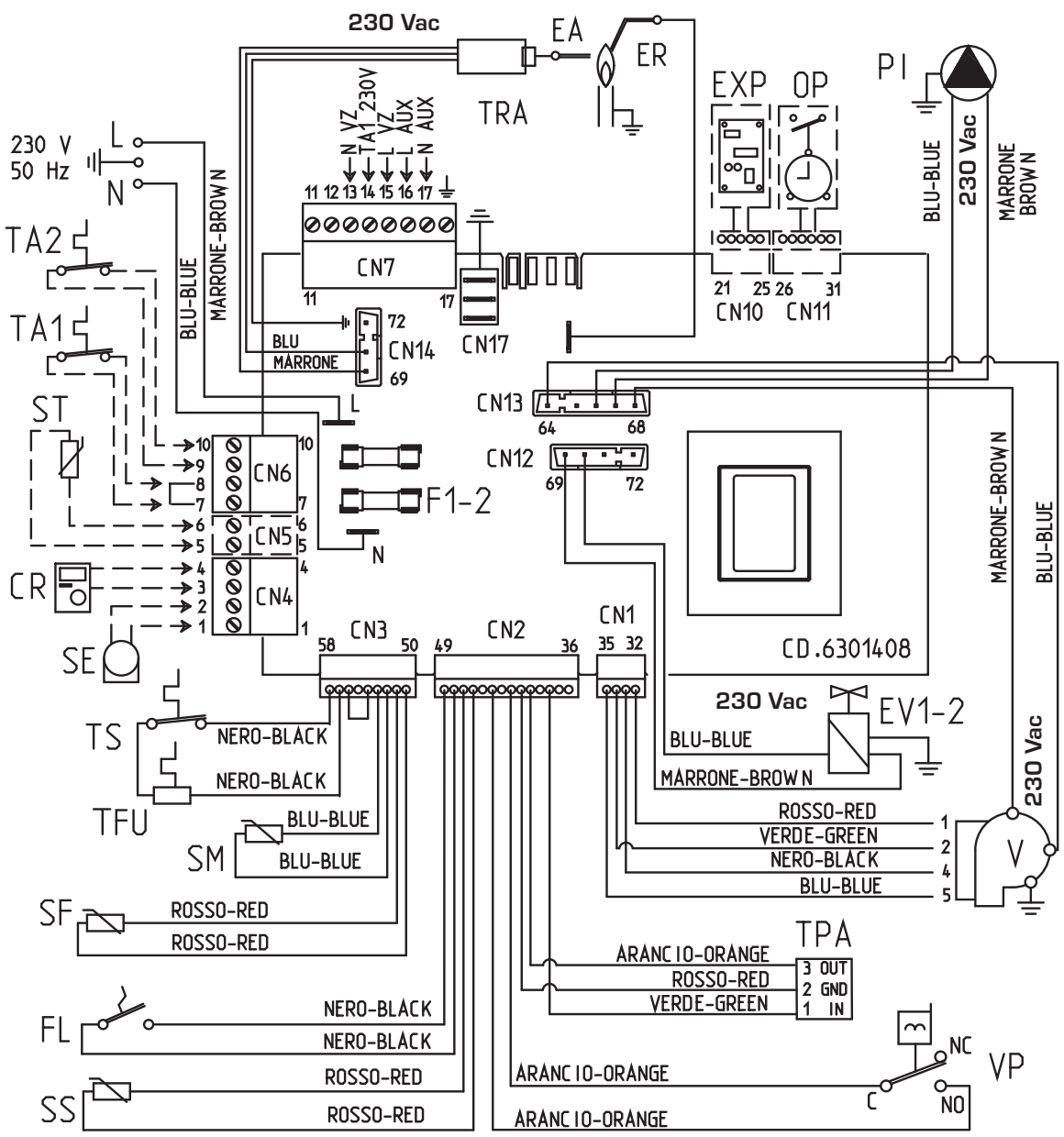

KEY

F1-2	Fuse (4 AT)
TRA	Ignition transformer
PI	Pump
V	Fan
EA	Ignition electrode
ER	Detection electrode
EV1-2	Gas valve coil
TS	Safety thermostat
SF	Exhaust fumes probes
TFU	Thermal fuse
VP	Diverter valve microswitch
SM	Heating sensor
FL	Water flow switch
SS	D.H.W. sensor
TPA	Pressure transducer
TA1	Zone 1 environment thermostat
TA2	Zone 2 environment thermostat
ST	Solar heat sensor
CR	Remote control CR 73 (optional)
SE	External sensor (optional)
OP	Internal time clock (optional)
EXP	Expansion card
AR	Remote alarm
VZ	Zone valve
AUX	Auxiliary connection

NOTE: Connect TA1 to the clamps 7-8 after having removed the bridge.

CONNECTOR SPARE PART CODES:

CN1	code 6316212
CN2	code 6316211
CN3	code 6316210
CN4	code 6316203
CN5	code 6316200
CN6	code 6316202
CN7	code 6316204
CN10	cod. 6316227
CN11	cod. 6316226
CN12	code 6299991
CN13	code 6316212
CN14	code 6316213

Fig. 11/a

3 CHARACTERISTICS

3.1 CONTROL PANEL

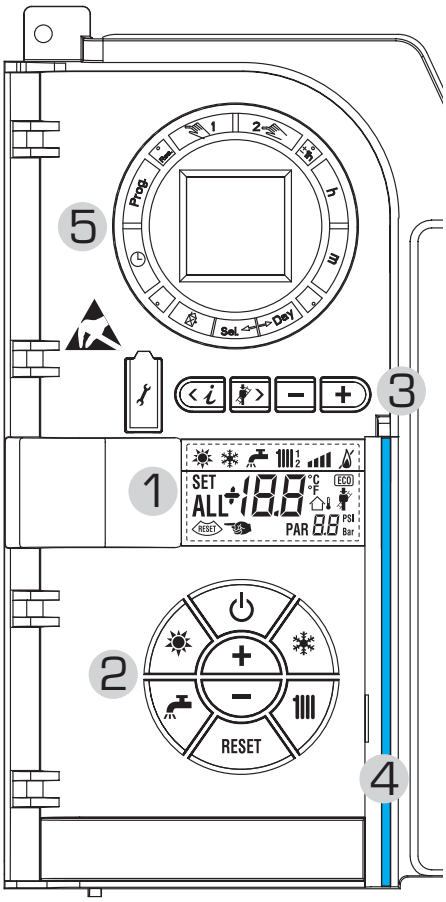

DESCRIPTION OF DISPLAY ICONS

SUMMER MODE ICON

WINTER MODE ICON

D.H.W. MODE ICON

HEATING MODE ICON
1 = First circuit heating system
2 = Second circuit heating system (optional)

GRADED POWER SCALE
The segments of the bar light up in proportion to boiler power output .

BOILER FUNCTIONING AND LOCKOUT ICON

RE-SET REQUIRED

CHIMNEY SWEEP ICON

SECONDARY DIGITS
The boiler displays the value of the pressure of the system (correct value is between 1 and 1.5 bar)

MAIN DIGITS
The boiler displays the values set, the state of anomaly and the external temperature

2 - DESCRIPTION OF CONTROLS

ON/STANDBY
ON = The boiler is on
STANDBY = The boiler is off, but the protection functions are active.

SUMMER MODE KEY
When this key is pressed, the boiler operates only when D.H.W. is requested.

WINTER MODE KEY
When this key is pressed, the boiler provides heating and D.H.W.

D.H.W TEMP KEY
When this key is pressed, the temperature of the D.H.W. is shown on the display.

HEATING TEMP KEY
The first time the key is pressed, the temperature of heating circuit 1 is shown.
The second time the key is pressed, the temperature of heating circuit 2 is shown.

RE-SET KEY
Press to reset a resettable error.

INCREASE AND DECREASE KEY
By pressing this key the set value increases or decreases.

3 - KEYS RESERVED FOR THE INSTALLER (access to INST and OEM parameters)

PC CONNECTION
To be used only with the SIME programming kit and only by authorised personnel. Do not connect other electronic devices (cameras, telephones, mp3 players, etc.) Use a tool to remove the cap and reinsert after use.
ATTENTION: Communication port sensitive to electrostatic charges.
Before use, it is advisable to touch an earthed metallic surface to discharge static electricity.

INFORMATION KEY
This key can be pressed several times to view the parameters.

CHIMNEY SWEEP KEY
This key can be pressed several times to view the parameters.

DECREASE KEY
This key changes the default settings.

INCREASE KEY
This key changes the default settings.

4 - LUMINOUS BAR
Blue = Operating normally
Red = Operating error

5 - PROGRAMMING CLOCK (optional)
Mechanical clock (code 8092228) the digital clock (code 8092229).
Analogic RF time programmer (code 8092231) the digital RF time programmer (code 8092232).

Fig. 12

3.2 ACCESS TO INSTALLER'S INFORMATION

For access to information for the installer, press the key (3 fig. 14). Every time the key is pressed, the display moves to the next item of information. If the key is not pressed, the system automatically quits the function. List of information:

1. Display of external temperature, only with external sensor connected

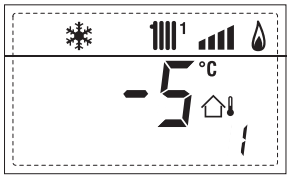

2. Display of heating temperature sensor (SM)

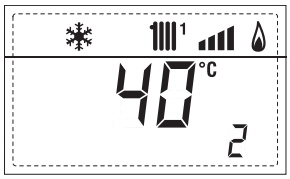

3. Display of D.H.W. temperature sensor (SS)

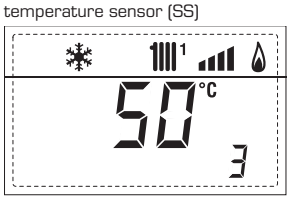

4. Display of auxiliary temperature sensor

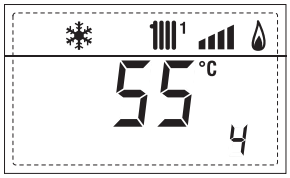

5. Display of smoke temperature sensor

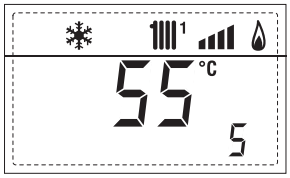

6. Display of heating temperature of first circuit

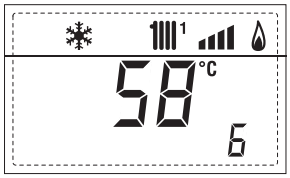

7. Display of heating temperature of second circuit

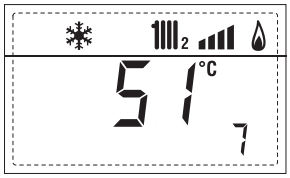

8. Display of ionisation current in µA

9. Display of fan speed in rpm x 100 (eg 4.800 and 1850 rpm)

10. Display of the number of hours x100 the burner has been alight (eg 14000 and 10)

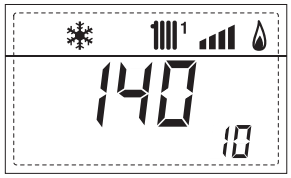

11. Display of number of times the burner has ignited x 1000 (eg 97000 and 500)

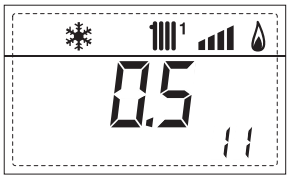

12. Display of code of last error

13. Display of code of penultimate error

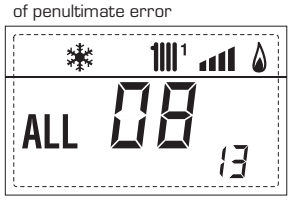

14. Display of total number of errors

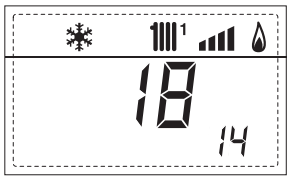

15. Installer parameter access counter (example =140 accesses)

16. OEM access counter (example = 48 accesses)

3.3 ACCESS TO INSTALLER'S PARAMETERS

Only qualified persons should alter any of the settings or parameters. Incorrect adjustment would cause defective operation and damage the boiler and would invalidate the warranty.

For access to the installer's parameters, press simultaneously the keys and for 5 seconds (3 fig. 12). For example, the parameter PAR 23 is visualised on the display of the control panel in the following way:

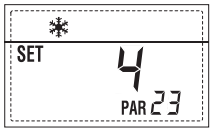

The parameters scroll forwards and backwards with the key and and the default parameters can be changed with the keys and ,.

The standard visualisation returns automatically after 60 seconds, or by pressing one of the control keys (2 fig. 12).

3.3.1 Replacement of PCB

Should the PCB be changed, PAR 1 and PAR 2 will require resetting as per the following table.

GAS	MODELS	PAR 1
METHANE (G20)	SYSTEM HE 12	**1**
	SYSTEM HE 20	**2**
	SYSTEM HE 25 - HE 25	**3**
	SYSTEM HE 30 - HE 30	**4**
	SYSTEM HE 35 - HE 35	**5**
PROPANE (G31)	SYSTEM HE 12	**6**
	SYSTEM HE 20	**7**
	-	**8**
	SYSTEM HE 25 - HE 25	**9**
	-	**10**
	SYSTEM HE 30 - HE 30	**11**
	SYSTEM HE 35 - HE 35	**12**
-	-	**-**
	-	**-**
	-	**26**

BOILER	PAR 2
HE 25-30-35	**1**
HE 25-30-35 COMBINED WITH SUN-PANEL SYSTEM	**2**
25/55 - 30/55	**3**
SYSTEM HE 12-20-25-30-35	**4**
AQUAQUICK	**5**

NOTE: A label on the inside of the clock cover (fig 19) will show the correct values of PAR 1 and PAR 2 assigned to the boiler."

PARAMETERS INSTALLER

FAST CONFIGURATION

PAR	DESCRIPTION	RANGE	UNIT OF MEASUREMENT	INC/DEC UNIT	DEFAULT SETTING
1	Combustion configuration	– = ND 1 ... 26	=	=	"–"
2	Hydraulic configuration	– = ND 1 ... 5	=	=	"–"
3	Timetable 2 programmer	1 = DHW + Recirc. pump 2 = DHW 3 = Recirculation pump	=	=	1
4	Pressure transducer disabler	0 = Disabled 1 = Enabled	=	=	1
5	Assignment of auxiliary relay AUX (D.H.W. tank)	1 = Remote supply 2 = Recirculation pump	=	=	1
6	Luminous bar indicating presence of voltage	0 = Disabled 1 = Enabled	=	=	1
7	Allocation of CR 73 channels	0 = Not assigned 1 = Circuit 1 2 = Circuits 1 and 2	=	=	1
8	Fan rpm Step ignition	0,0 ... 81	rpmx100	0,1da 0,1a19,9 1da 20 a 81	0,0
9	Long chimneys	0 ... 20	%	1	0
10	Remote control option setting	1 = CR 73 2 = CR 53 3 = RVS	=	=	1
11	Correction values external sensor	-5 ... +5	°C	1	0

D.H.W. - C.H.

PAR	DESCRIPTION	RANGE	UNIT OF MEASUREMENT	INC/DEC UNIT	DEFAULT SETTING
20	D.H.W. minimum temperature	10 °C ... PAR 21	°C	1	30
21	D.H.W maximum temperature	PAR 20 ... PAR 62 OEM	°C	1	60
22	Anti-legionella (only D.H.W. tank)	0 = Disabled 1 = Enabled	=	=	0
23	Boiler antifreeze	- 5 ... +5	°C	1	3
24	External sensor antifreeze	- 15 ... +5	°C	1	- 2
25	Climatic curve setting Zone 1	3 ... 40	=	1	20
26	Climatic curve setting Zone 2	3 ... 40	=	1	20
27	Minimum temperature Zone 1	PAR 64 OEM ... PAR 28	°C	1	20
28	Maximum temperature Zone 1	PAR 27 ... PAR 65 OEM	°C	1	80
29	Minimum temperature Zone 2	PAR 64 OEM ... PAR 30	°C	1	20
30	Maximum temperature Zone 2	PAR 29 ... PAR 65 OEM	°C	1	80
31	Maximum heating power	30 ... 100	%	1	100
32	Post-circulation temperature	0 ... 199	Sec.	10	30
33	Pump activation delay Zone 1	0 ... 199	10 sec.	1	1
34	Re-ignition delay	0 ... 10	Min.	1	3

EXPANSION CHART

PAR	DESCRIPTION	RANGE	UNIT OF MEASUREMENT	INC/DEC UNIT	DEFAULT SETTING
40	Assignment to mixed zones	1 = Zone 1 2 = Zone 2	=	=	1
41	Mix valve stroke time	0 ... 199	10 sec.	1	12
42	Priority D.H.W. over mixed zone	0 = Paralle 1 = Absolute	=	=	1
43	Floor drying	0 = No activated 1 = Curve A 2 = Curve B 3 = Curve A+B	=	=	0

RE-SET

PAR	DESCRIPTION	RANGE	UNIT OF MEASUREMENT	INC/DEC UNIT	DEFAULT SETTING
49	Reset default parameters (PAR 01 - PAR 02 = "-")	– , 1	=	=	=

3.4 EXTERNAL SENSOR

If there is an external sensor, the heating settings SET can be taken from the climatic curves according to the external temperature and, in any case, limited to with the range values described in point 3.3 (parameters PAR 25 for zone 1 and PAR 26 for zone 2).
The climatic curve to be set can be selected from a value of 3 and 40 (at step 1).
Increasing the steepness of the curves of fig. 13 will increase the output temperature as the external temperature decreases.

3.5 CARD FUNCTIONING

The electronic card has the following functions:
- Antifreeze protection of the heating and D.H.W. circuits (ICE).
- Ignition and flame detection system.
- Control panel setting for the power and the gas for boiler functioning.
- Anti-block for the pump which is fed for a few seconds after 24 hours of inactivity.
- Antifreeze protection for boilers with D.H.W. storage tank.
- Chimney sweep function which can be activated from the control panel.
- Temperature which can be shifted with the external sensor connected.
  It can be set from the control panel and is active on the heating systems of both circuit 1 and circuit 2.
- Management of two independent heating circuit systems.
- Automatic regulation of the ignition power and maximum heating.
  Adjustments are managed automatically by the electronic card to guarantee maximum flexibility in use of the system.
- Interface with the following electronic systems: climatic regulator CR 53, remote control CR 73, thermal regulator RVS and connected to a management card of a mixed zone cod. 8092233.
  NOTE: If using CR 53 or RVS set parameter 10 to 2 (PAR 10 = 2).

3.6 TEMPERATURE DETECTION SENSOR

Table 4 shows the resistance values of the heating, DHW and exhaust fumes thermistors.

If the heating sensor (SM) is faulty or open circuit, the boiler will not function on either heating or DHW (ALL 05).
If the exhaust fumes sensor (SF) is faulty or open circuit, the boiler will not function on either heating or DHW (ALL 14).
If the DHW sensor (SS) is faulty or open circuit, the boiler will work without modulation to the DHW temperature.

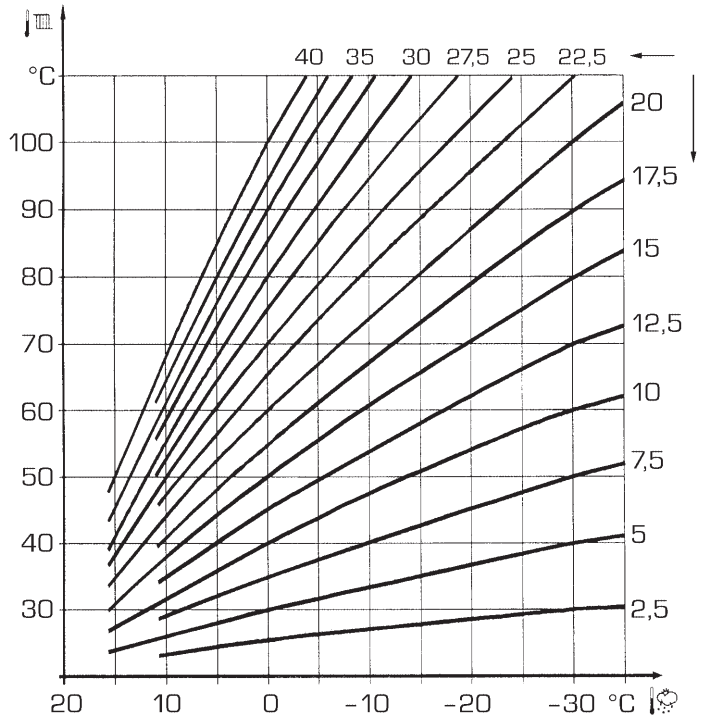

ATTENTION: curves are calculated at an ambient temperature of 20°C. It is however possible to use the boiler controls to change them by ±5°C.

Fig. 13

TABLE 4 (SM - SS - SF sensors)

Temperature (°C)	Resistance (Ω)
20	12.090
30	8.313
40	5.828
50	4.161
60	3.021
70	2.229
80	1.669

3.7 ELECTRONIC IGNITION

Ignition and flame detection is controlled by a single electrode on the burner which guarantees reaction in the case of accidental extinction or lack of gas within one second.

3.7.1 Functioning cycle

Burner ignition should occur within 10 seconds of the opening of the gas valve. If after three attempts the ignition is not detected the boiler will lockout (ALL 06):
- **Lack of gas**
  The ignition electrode will discharge for a maximum of 10 seconds. If after three attempts the ignition is not detected the boiler will lockout (ALL 06). This can happen the first time a boiler is switched on, or after long periods of inactivity. It can also be caused by a closed gas cock or a gas valve not operating.
- **No ionisation**
  The boiler will spark for 10 seconds, if after 3 attempts the ionisation is not detected, the boiler will lockout (ALL 06). This could be due to a poor connection or break in the ionisation cable. Check also that the cable is not shorted, badly worn or distorted.

In the case of a sudden lack of voltage, the burner will immediately switch off. When voltage returns, the boiler will automatically start up again.

3.8 WATER FLOW SWITCH

The water flow switch (2 fig 3) intervenes stopping the burner functioning (ALL 09), if it detects that there is insufficient water flow in the primary circuit (< 450 l/h). This can be caused by a jammed or faulty pump, low system pressure, or a blocked "Aqua

Guard Filter" (4.5.2)

N.B. on system boilers it is important that if the flow switch assembly is changed, it is fitted with the arrow pointing in the correct direction.

3.9 HEAD AVAILABLE TO SYSTEM

Residual head for the heating system is shown as a function of rate of flow in the graph in fig. 14.

To obtain the maximum head available to the system, turn off the by-pass by turning the union to the vertical position (fig. 15).

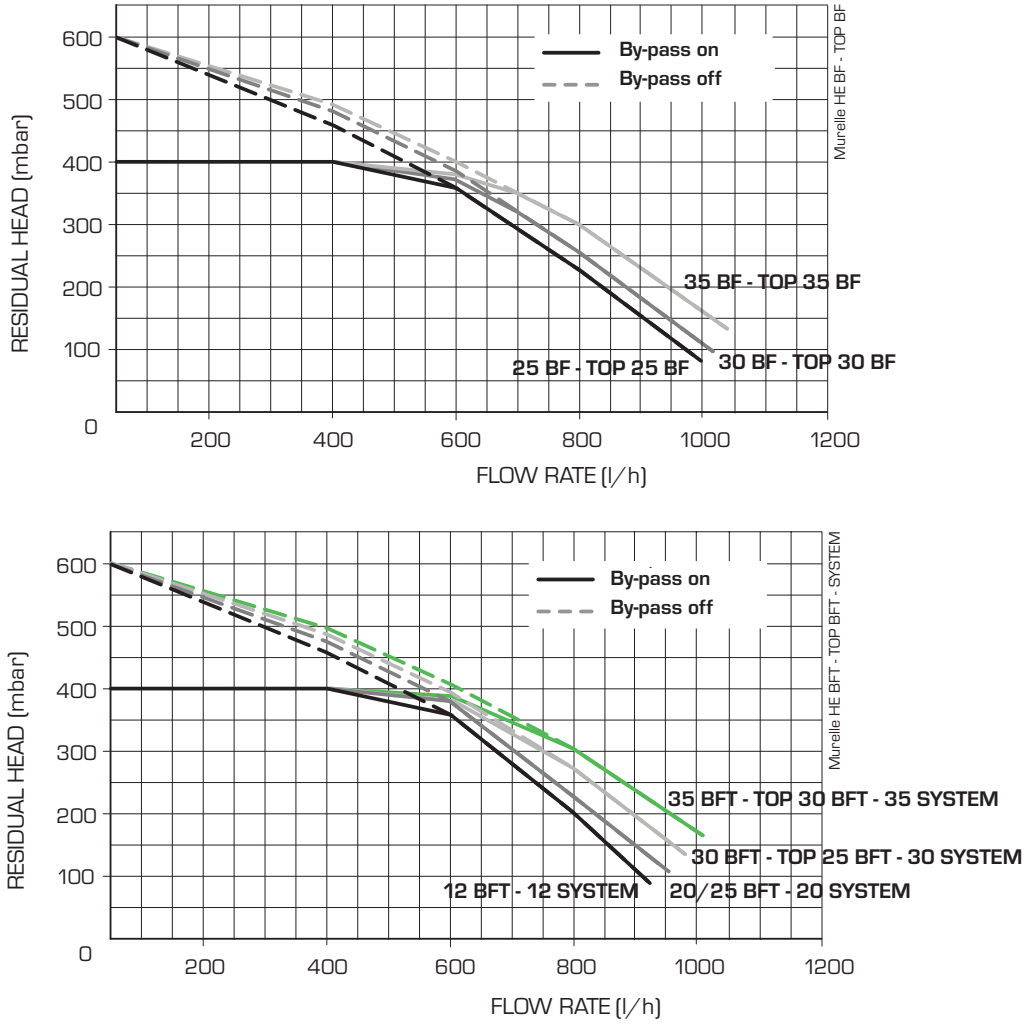

Fig. 14

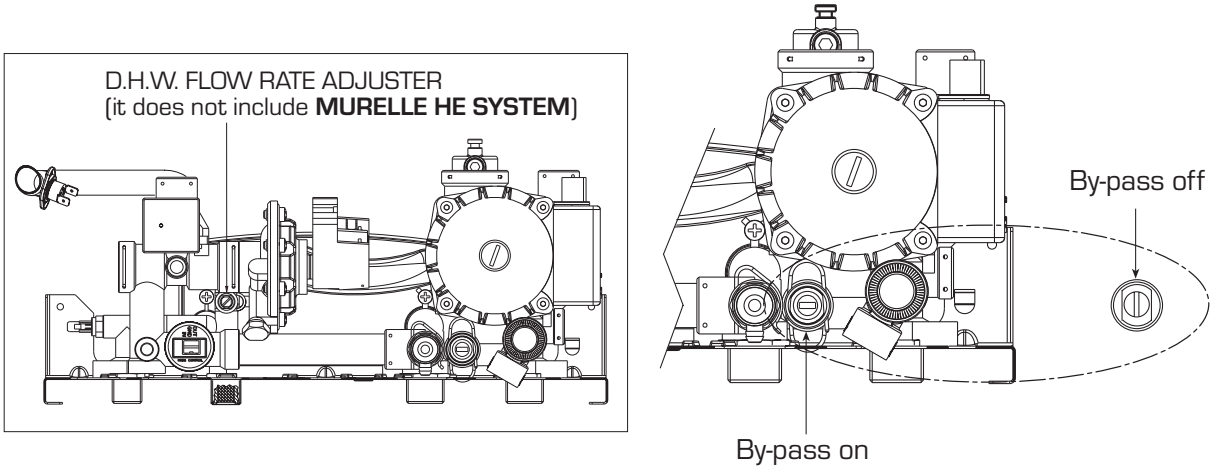

Fig. 15

4 USE AND MAINTENANCE

4.1 ADJUSTMENT OF D.H.W. FLOW RATE

To adjust the D.H.W. flow rate, use the flow rate adjuster (fig. 15). Remember that the flow rates and corresponding temperatures of use of hot water, given in section 1.3, have been obtained by positioning the selector of the circulation pump on the maximum value.
Should there be any reduction in the D.H.W. flow rate, the filter installed on the inlet to the divertor valve (3 fig. 4) will need cleaning.

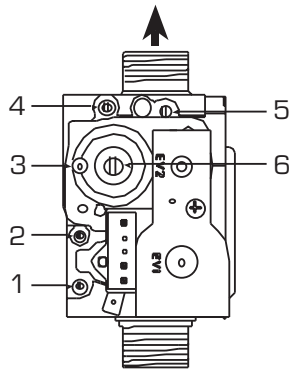

KEY
1 Upstream pressure intake
2 Intermediate pressure intake
3 Air signal inlet (VENT)
4 Downstream pressure intake
5 Capacity step
6 OFF-SET

Fig. 16

4.2 GAS VALVE

The boiler is supplied as standard with a gas valve, model SIT 848 SIGMA (Fig. 16).

4.3 GAS CONVERSION (fig. 17)

This operation must be performed by authorised personnel using original Sime components.
To convert from natural gas to LPG or vice versa, perform the following operations
- Close the gas cock.
- Replace the nozzle (1) and the gasket (2) using those supplied in the conversion kit.
- Test all the gas connection leak detection fluid. Do not use open flames.
- Reset PAR as shown in 4.3.1.
- Apply the nameplate with the new gas flow layout.
- Calibrate the maximum and minimum pressures of the gas valve following the instructions provided in paragraph 4.3.2.

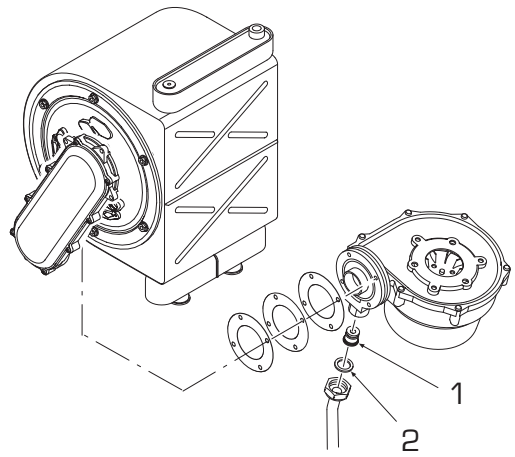

Fig. 17

4.3.1 New fuel configuration

For access to the installer's parameters, press simultaneously keys and for 5 seconds (3 fig. 12).
Scroll through the parameters using the and buttons.
The SET of the parameter is changed using the and .. The display pane will show the values of the parameter PAR 1. If the boiler is a **HE 25** methane (G20) model, SET 3 will be displayed:

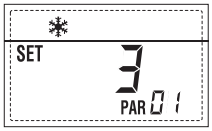

To change the fuel to propane (G31), it is necessary to set SET 9, by pressing the key .

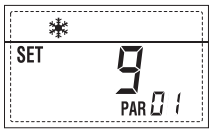

The standard display will automatically return after 10 seconds.

The table below shows the SET settings to enter when the type of gas fuel is changed.

GAS	MODELS	PAR 1
METHANE (G20)	SYSTEM HE 12	1
	SYSTEM HE 20	2
	SYSTEM HE 25 - HE 25	3
	SYSTEM HE 30 - HE 30	4
	SYSTEM HE 35 - HE 35	5
PROPANE (G31)	SYSTEM HE 12	6
	SYSTEM HE 20	7
	-	8
	SYSTEM HE 25 - HE 25	9
	-	10
	SYSTEM HE 30 - HE 30	11
	SYSTEM HE 35 - HE 35	12
-	-	-
	-	-
	-	26

4.3.2 Calibrating the gas valve pressures

Measure the CO_2 values with a combustion analyzer.

Sequence of operations:

1) Press and hold the button down for a few seconds .

2) Press the button for a few seconds ..

MAX power	
CO_2 (Methane)	CO_2 (Propane)
9,0 ±0,3	10,0 ±0,3

3) Identify the CO_2 value at max power, adjust using the shutter (5 fig. 16):

4) Press the button for a few seconds .

MIN power	
CO_2 (Methane)	CO_2 (Propane)
9,0 ±0,3	10,0 ±0,3

5) Identify the CO_2 value at min power, adjust using the OFF-SET regulation screw (6 fig. 16):

6) Press the min and max values several times using the . and . buttons, reset as necessary.

7) Press the button once more to quit the function.

4.4 REMOVING THE COVERS

It is possible to completely remove the covers for easier access as shown in fig 19. The control panel can be hinged forward after removing the front cover and the retaining screw 2.

4.5 MAINTENANCE

To ensure correct operation and efficiency it is important that the boiler is serviced at regular intervals, at least once a year.

This must be done only by a qualified technician. During the routine service the condensate drain can be checked.
It is important should the boiler not be used for some time that the trap is checked and filled if required (see fig. 20).

4.5.1 Chimney sweep function (fig. 21)

To check the boiler combustion(CO2) press the Chimney sweep button for a few seconds, the Chimney sweep icon will illuminate.
The boiler will ignite and continue for 15

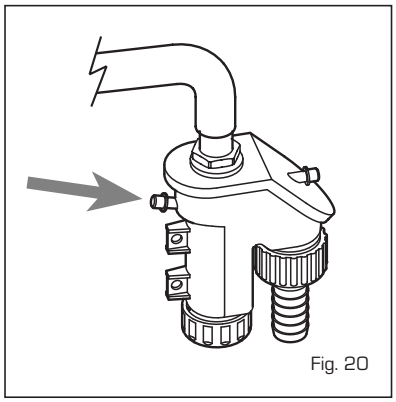

Fig. 20

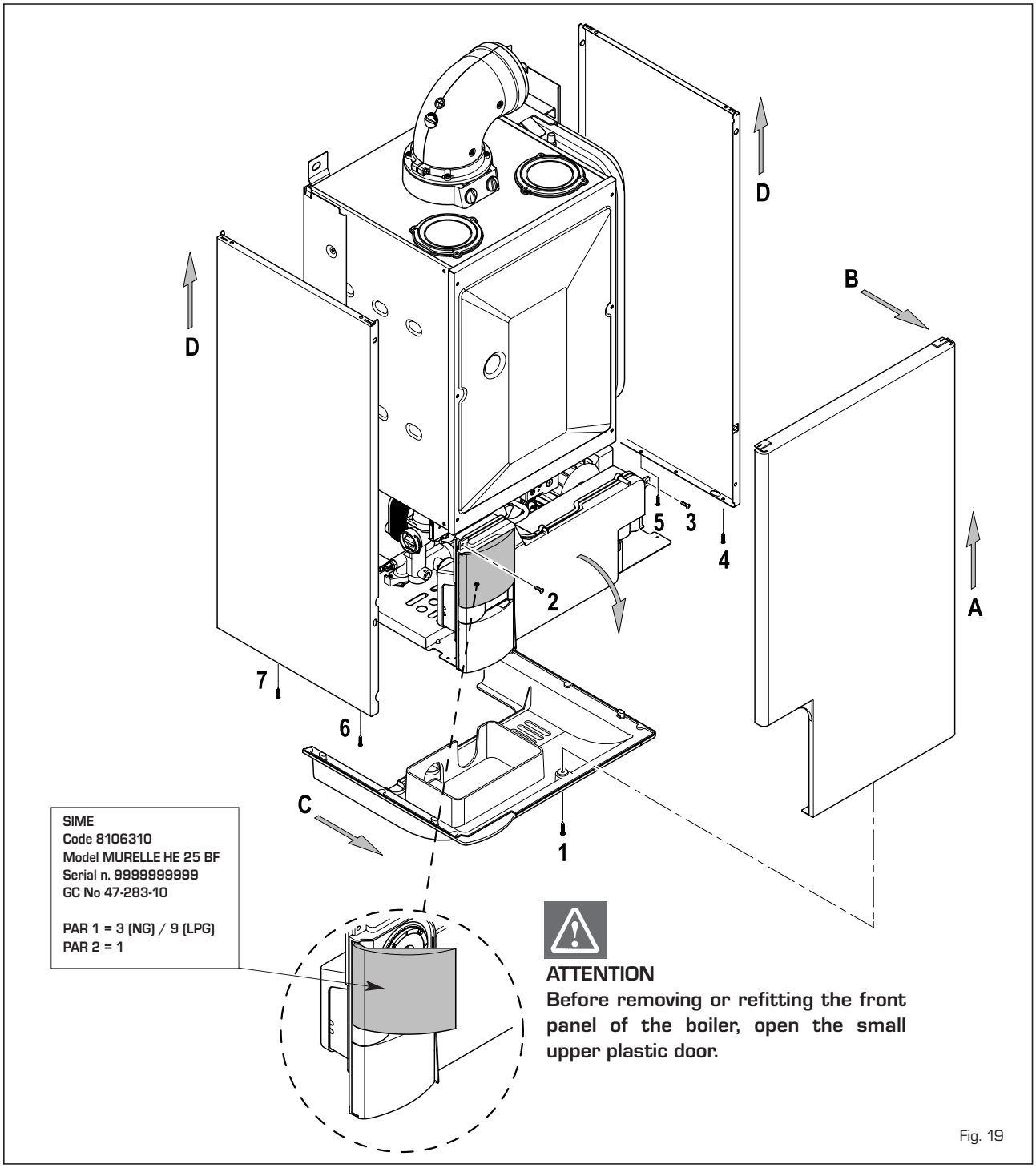

Fig. 19

minutes in heating mode.

The burner will turn off at 80 degrees and reignite at 70 degrees.

(Warning! Ensure adequate circulation around heating system before activating the Chimney sweep function).

The test can also be carried out using the boiler in D.H.W. mode.
After activating Chimney sweep, turn on a D.H.W. tap.
Under these circumstances the boiler will operate at maximum power with the primary heating circuit kept between 60 degrees and 50 degrees, the tap must remain open.

If the [+] and [−] keys are presses during the 15 minutes the boiler will be brought respectively to max and min output.

The chimney sweep function will automatically cancel after 15 minutes or if the chimney sweep button is pressed again.

4.5.2 Cleaning the "Aqua Guard Filter System" (fig. 22)

To clean the filter, first close the flow and return isolation valves.
Drain the boiler using the drain vent.
Place a container underneath the filter, and unscrew the filter.
Clean the filter and replace.
Check the o-ring seal after refilling the boiler.

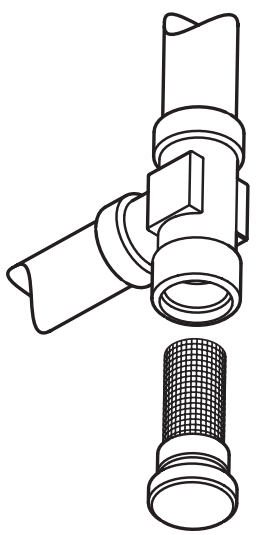

Fig. 22

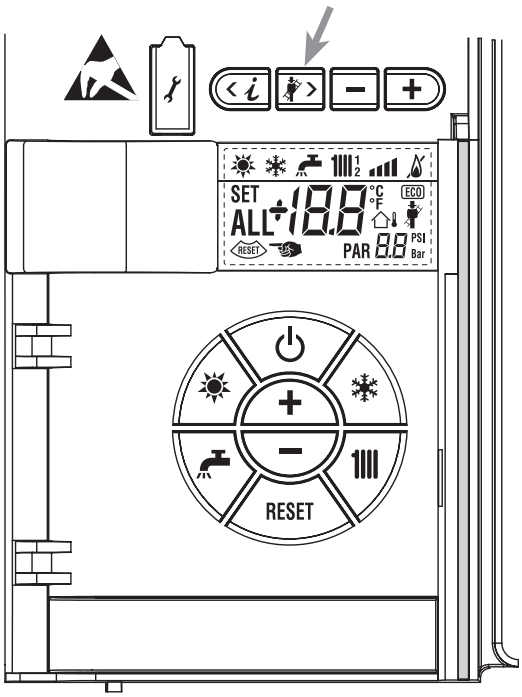

Fig. 21

4.6 FUNCTIONING ERRORS

Where there is a functioning error an alarm appears on the display. **The blue luminous bar may turn red.**
Descriptions of the error are given below:

- **FLUE TEMPERATURE ALARM 01** (fig. 23)
  Check link on terminals 54-56 at PCB.

- **LOW SYSTEM PRESSURE ALARM 02** (fig. 23/a)
  If the system pressure detected by the transducer is lower than 0.5 bar the boiler will stop and display error "ALL 02".
  Increase the system pressure to between 1.0 and 1.5 bar using the external filling loop.
  The boiler will automatically resume operating.

Fig. 23/a

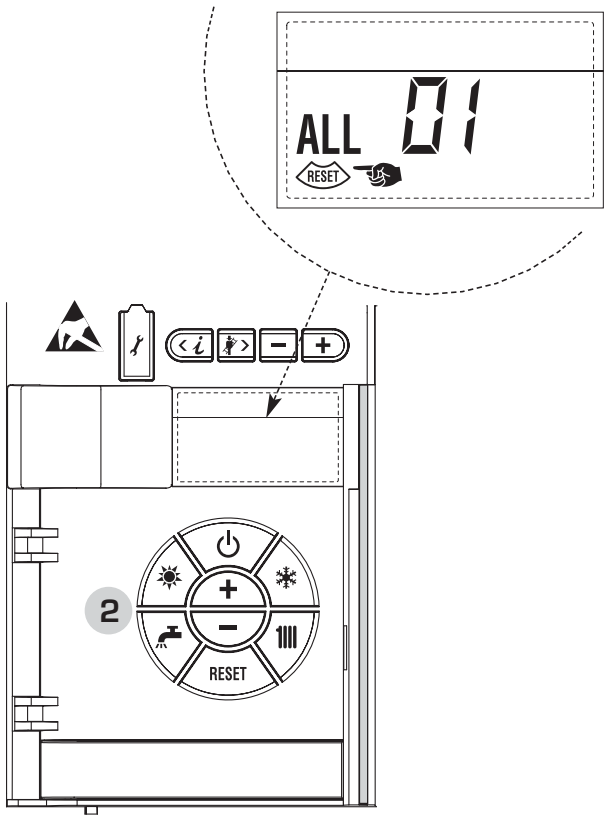

Fig. 23

- **HIGH SYSTEM PRESSURE ALARM 03** (fig. 23/b)
  If the system pressure detected by the transducer is more than 2.8 bar, the boiler will stop and display "ALL 03". Drain water from the system until the pressure is between 1.0 and 1.5 bar. Ensure that the filling loop is disconnected. If the problem persists, seek technical advice.

Fig. 23/b

- **D.H.W. SENSOR ALARM 04** (fig. 23/c)
  If the D.H.W. sensor (SS) is open or short circuit, the boiler will continue to operate but without control of the D.H.W. temperature. The display will show "ALL 04".

Fig. 23/c

- **HEATING SENSOR ALARM 05** (fig. 23/d)
  If the heating sensor (SM) is open or short cicuit, the boiler will stop operating and display "ALL 05".

Fig. 23/d

- **LOCKOUT ALARM 06** (fig. 23/e)
  If a flame is not detected after a complete ignition cycle or for any other reason the flame is not detected, the boiler will stop and display "ALL 06".
  Press the reset button RESET on the control panel (2) to restart the boiler.
  Should the problem persist seek technical help.

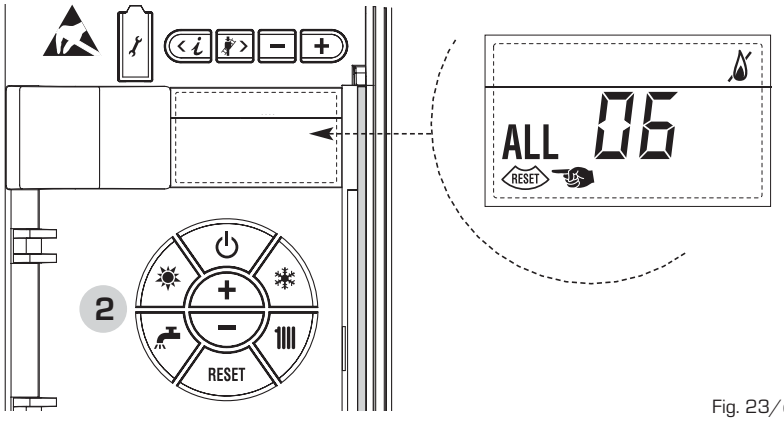

Fig. 23/e

– **SAFETY THERMOSTAT ALARM 07** (fig. 23/f)
If either the 100 degree stat or the heat exchanger safety stat open, the burner will turn off. If the stat closes within 1 minute, the boiler will resume operation. If the stat remains open for more than 1 minute the display will show "ALL 07".
Press the reset key on the control panel (2) to restart the boiler.
If the problem persists seek technical advice.

– **FLAME DETECTION ERROR 08** (fig. 23/g)
If the flame control detects aflame when one should not be detected, the boiler will stop and display "ALL 08".

Fig. 23/g

– **SYSTEM WATER CIRCULATION ERROR 09** (fig. 23/h)
If the system flow switch detects inadequate circulation, the boiler will stop and the display will show "ALL 09". If the error persists for more than 1 minute, the boiler will stop and wait for 6 minutes. The boiler will then attempt to restart. Possible causes of this error are faulty or jammed pump, blocked Aqua Guard filter, closed flow or return valve, blocked heating system.

Fig. 23/h

– **AUXILIARY SENSOR ANOMALY ERROR 10** (fig. 23/l)
BOILER WITH ACCUMULATION: anomaly of the D.H.W. sensor. When the D:H.W. sensor is open or short circuited, the display will show anomaly "ALL 10". The boiler will function but will not modulate power for the D.H.W.

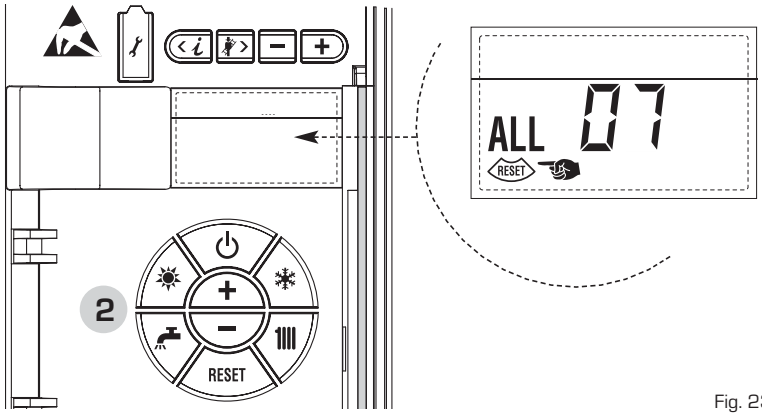

Fig. 23/f

BOILER ONLY FOR HEATING: antifreeze sensor anomaly for boilers which foresee the use of antifreeze sensors.
When the sensor is open or short circuited, the boiler loses part of its anti-freeze functions and the display will show anomaly "ALL 10".
BOILER COMBINED WITH SUN-PANEL SYSTEM: anomaly of the D.H.W. input sensor. When the sensor is open or short circuited, the boiler loses the sun-panel function and the display will show anomaly "ALL 10".

Fig. 23/l

– **ACTIVATION OF THE EXHAUST FUMES SENSOR ERROR 13** (Fig. 23/p)
The activation of this probe causes the boiler to stop and error message "ALL 13" to display.
Press the key of the controls (2) to start up the boiler again.

Fig. 23/p

– **EXHAUST FUMES SENSOR ERROR 14** (fig. 23/q)
If the exhaust fumes sensor is open or short circuit, the boiler will stop and display "ALL 14".

Fig. 23/q

– **FAN ERROR 15** (Fig. 23/r)
If the fan speed is not within the rated speed range,the display will show "ALL 15".
If the problem persists for more than two minutes the boiler will stop thirty minutes, after which it will attempt to resume operating.

Fig. 23/r

4.7 COMMISSIONING AND ROUTINE SERVICE

Commissioning and servicing can only be done by a qualified engineer.

4.7.1 Commissioning

The gas valve is factory set and should require no adjustment.
Refer to section 4.3.2 "Calibrating the gas valve", to conduct a confirmation check.
The following procedure should be done after installation a gas purge and tightness/drop test have been made.
Ensure that the auto air vent (17 fig. 3) is opened, turn the electrical supply on.
With the boiler on standby fill the system and pressurise to 1.5 bar.
Ensure that the pump has been manually rotated.
Open the gas cock, press the "❄ mode key" (fig. 12).
Ensure that any timers or room thermostats are in the on position.
The boiler will attempt to light.
If the display shows ALL 09 or poor circulation is indicated (noisy), open the main heat exchanger manual air vent (on top of main heat exchanger 21 fig. 3), close after all air is expelled.
Press "☀ mode key" (fig. 12).
The burner will extinguish.
Turn on a DHW tap fully (preferably the bath tap).
Adjust the flow rate, using the flow adjuster as shown in section 4.1, to the correct rate for the size of boiler installed as per table 1.3.
Set the controls to the required values as shown in the user guide.
Complete the Benchmark sheet enclosed in this manual.
Explain controls and operation to the user.
Leave all documentation with the user.

4.8 ROUTINE SERVICE

To ensure continued efficient operation of the appliance, it is recommended that it is checked and serviced at regular intervals. The frequency of service will depend on the particular installation and conditions of usage, but in general once a year should be adequate.
It is the law that a competent person such as a Gas Safe Register registered engineer, must carry out any service work.

4.8.1 Combustion Check

Incorporated into the flue elbow or vertical adaptor is a sampling point.
The grey plastic cap should be unscrewed and the flue gas sampled using a flue gas analyser.
During the test the boiler can be operated in "chimney sweep mode" see 4.3.2.
The correct CO_2 reading can be found in section 1.3.

4.8.2 Burner inspection

Remove the burner as described in section 6.4.
Inspect the burner and if necessary clean using a soft brush, taking care not to damage the front insulation.
Check the Ignition/ionisation electrode, check the ignition spark gap (4 mm+/- 0.5 mm).
Check the ionisation electrode, check the distance from the burner (18.7 mm+/- 1 mm).
Before reassembly inspect all seals and replace as required.

4.8.3 Combustion Chamber

Remove any loose debris from the combustion chamber using a soft brush and a vacuum cleaner.
Take care not to damage the rear insulation panel.

4.8.4 Condensate Trap

The condensate trap would not normally require removal during service, but can be checked whilst the burner assembly is removed.
Carefully pour water into the heat exchanger and check that it flows freely to the drain.
Should it require removal, firstly remove the two wire clips securing the condensate drain rubber pipe to the heat exchanger and the condensate trap.
Remove the pipe.
Remove the 1/2" nut securing the condensate trap to the combustion compartment.
Disconnect the drain pipe from the trap.
Clean the trap and refit in reverse order.

4.8.5 Flow Switch

The operation of the flow switch should be checked at each service.
Remove small cover retaining screw and remove the cover.
When the pump is running and water is flowing around the boiler, the actuator lifts off the micro switch.
Check that the operation of the actuator. Ensure that it is free and that it lifts and returns.
If necessary lubricate the pivot point of the actuator.
Isolate the boiler.
Drain it using the drain provided.
Remove the micro switch by carefully pulling it forward off its mounting pins.
Remove the screw securing the mounting plate, then pull off the plate.
Pull out the actuator pin.
Lubricate the centre "O" ring.
Refit the actuator ensuring that the flat side of the round section is to the bottom.
Re-assemble remaining parts (see 4.8.6 before refilling the boiler).

4.8.6 Aqua Guard Filter

It is recommended that the Aqua Guard filter is checked at each service. See section 4.5.2.

GAS BOILER SYSTEM COMMISSIONING CHECKLIST

This Commissioning Checklist is to be completed in full by the competent person who commissioned the boiler as a means of demonstrating compliance with the appropriate Building Regulations and then handed to the customer to keep for future reference.

Failure to install and commission this equipment to the manufacturer's instructions may invalidate the warranty but does not affect statutory rights.

Customer Name _____ Telephone Number _____

Address _____

Boiler Make and Model _____

Boiler Serial Number | | | | | | | | | | | | | | | | | | | | | | | | | | | | | | | | | | | | | |

Commissioned by *(print name)* _____ GAS SAFE REGISTER ID Number _____

Company Name _____ Telephone Number _____

Company Address _____

_____ Commissioning Date _____

To be completed by the customer on receipt of a Building Regulations Compliance Certificate*:

Building Regulations Notification Number *(if applicable)* _____

CONTROLS Tick the appropriate boxes

Time and Temperature Control to Heating	Room Thermostat and Programmer/Timer ☐	Programmable Room Thermostat ☐	Load/Weather Compensation ☐	Optimum Start Control ☐
Time and Temperature Control to Hot Water		Cylinder Thermostat and Programmer/Timer ☐		Combination Boiler ☐
Heating Zone Valves			Fitted ☐	Not Required ☐
Hot Water Zone Valves			Fitted ☐	Not Required ☐
Thermostatic Radiator Valves			Fitted ☐	Not Required ☐
Automatic Bypass to System			Fitted ☐	Not Required ☐
Boiler Interlock				Provided ☐

ALL SYSTEMS

The system has been flushed and cleaned in accordance with BS7593 and boiler manufacturer's instructions Yes ☐

What system cleaner was used? _____

What inhibitor was used? _____ Quantity _____ *litres*

CENTRAL HEATING MODE Measure and Record:

Gas Rate _____ m^3/hr OR _____ ft^3/hr

Burner Operating Pressure (if applicable) _____ mbar OR Gas Inlet Pressure _____ mbar

Central Heating Flow Temperature _____ °C

Central Heating Return Temperature _____ °C

COMBINATION BOILERS ONLY

Is the installation in a hard water area (above 200ppm)? Yes ☐ No ☐

If yes, has a water scale reducer been fitted? Yes ☐ No ☐

What type of scale reducer has been fitted? _____

DOMESTIC HOT WATER MODE Measure and Record:

Gas Rate _____ m^3/hr OR _____ ft^3/hr

Burner Operating Pressure (at maximum rate) _____ mbar OR Gas Inlet Pressure (at maximum rate) _____ mbar

Cold Water Inlet Temperature _____ °C

Hot water has been checked at all outlets Yes ☐ Temperature _____ °C

Water Flow Rate _____ *l/min*

CONDENSING BOILERS ONLY

The condensate drain has been installed in accordance with the manufacturer's instructions and/or BS5546/BS6798 Yes ☐

ALL INSTALLATIONS

If required by the manufacturer, record the following CO_2 _____ % OR CO _____ *ppm* OR CO/CO_2 Ratio _____

The heating and hot water system complies with the appropriate Building Regulations Yes ☐

The boiler and associated products have been installed and commissioned in accordance with the manufacturer's instructions Yes ☐

The operation of the boiler and system controls have been demonstrated to and understood by the customer Yes ☐

The manufacturer's literature, including Benchmark Checklist and Service Record, has been explained and left with the customer Yes ☐

Commissioning Engineer's Signature _____

Customer's Signature _____

(To confirm satisfactory demonstration and receipt of manufacturer's literature)

*All installations in England and Wales must be notified to Local Authority Building Control (LABC) either directly or through a Competent Persons Scheme. A Building Regulations Compliance Certificate will then be issued to the customer.

benchmark COLLECTIVE MARK
THE MARK OF QUALITY FOR THE INSTALLATION, COMMISSIONING AND SERVICING OF DOMESTIC HEATING AND HOT WATER SYSTEMS

©Heating and Hotwater Industry Council (HHIC)

www.centralheating.co.uk

SERVICE RECORD

It is recommended that your heating system is serviced regularly and that the appropriate Service Record is completed.

Service Provider
Before completing the appropriate Service Record below, please ensure you have carried out the service as described in the manufacturer's instructions.

Always use the manufacturer's specified spare part when replacing controls.

SERVICE 1 Date
Energy Efficiency Checklist completed? Yes ☐ No ☐
Engineer Name
Company Name
Telephone Number
GAS SAFE REGISTER ID Number
Comments
Signature

SERVICE 2 Date
Energy Efficiency Checklist completed? Yes ☐ No ☐
Engineer Name
Company Name
Telephone Number
GAS SAFE REGISTER ID Number
Comments
Signature

SERVICE 3 Date
Energy Efficiency Checklist completed? Yes ☐ No ☐
Engineer Name
Company Name
Telephone Number
GAS SAFE REGISTER ID Number
Comments
Signature

SERVICE 4 Date
Energy Efficiency Checklist completed? Yes ☐ No ☐
Engineer Name
Company Name
Telephone Number
GAS SAFE REGISTER ID Number
Comments
Signature

SERVICE 5 Date
Energy Efficiency Checklist completed? Yes ☐ No ☐
Engineer Name
Company Name
Telephone Number
GAS SAFE REGISTER ID Number
Comments
Signature

SERVICE 6 Date
Energy Efficiency Checklist completed? Yes ☐ No ☐
Engineer Name
Company Name
Telephone Number
GAS SAFE REGISTER ID Number
Comments
Signature

SERVICE 7 Date
Energy Efficiency Checklist completed? Yes ☐ No ☐
Engineer Name
Company Name
Telephone Number
GAS SAFE REGISTER ID Number
Comments
Signature

SERVICE 8 Date
Energy Efficiency Checklist completed? Yes ☐ No ☐
Engineer Name
Company Name
Telephone Number
GAS SAFE REGISTER ID Number
Comments
Signature

SERVICE 9 Date
Energy Efficiency Checklist completed? Yes ☐ No ☐
Engineer Name
Company Name
Telephone Number
GAS SAFE REGISTER ID Number
Comments
Signature

SERVICE 10 Date
Energy Efficiency Checklist completed? Yes ☐ No ☐
Engineer Name
Company Name
Telephone Number
GAS SAFE REGISTER ID Number
Comments
Signature

5 FAULT FINDING

If an electrical fault occurs on the appliance the preliminary electrical system checks must be carried out first.
When any service or replacement of electrical components which has required the breaking and re-making of electrical connections has taken place, the following tests must be repeated:

- earth continuity;
- short circuit;
- polarity;
- resistance to earth.

5.1 EARTH CONTINUITY CHECK

Appliances must be electrically disconnected, meter set on Ω (ohm) x 1 scale and adjust zero if necessary. Tests leads from any appliance earth point (e.g. inside control box) see wiring diagrams (section 7) to earth pin on plug.
Resistance should be less than 1 Ω (ohm). If the resistance is greater than 1 Ω (ohm) check all earth wires for continuity and all contacts are clean and tight. If the resistance to earth is still greater than 1 Ω (ohm) then this should be investigated futher.

5.2 SHORT CIRCUIT CHECK

Switches turned FULL ON - meter set on Ω (ohms) x 1 scale. Test leads from L to N on appliance terminal block, if meter reads 0 then there is a short circuit.
Meter set on Ω (ohm) x 100 scale. Repeat it with leads from L to E. If meter reads less than infinity (∞) there is a fault.

NOTE: Should it be found that the fuse has failed but no fault is indicated, a detailed continuity check (i.e. by disconnecting and checking each component) is required to trace the faulty component.
It is possible that a fault could occur as a result of local burning/arcing but no fault could be found under test. However, a detailed visual inspection should reveal evidence of burning around the fault.

5.3 POLARITY CHECK

Appliance reconnected to mains supply and meter set on 300 V ac scale. Test at appliance terminal block.

- Test leads from L to N meter reads approx.: 240 V ac.
- Test leads from L to E " ☀ " meter reads approx. 240 V ac.
- Test leads from N to E " ☀ " meter reads from 0 to 15 V ac.

5.4 RESISTANCE TO EARTH CHECK

Appliance must be disconnected from main supply and meter on Ω (ohm) x 100 scale.
All switches including thermostat on test leads from L to E - if meter reads other than infinity (∞) there is a fault which should be isolated.
A detailed continuity check is required to trace the faulty component.

IMPORTANT:
These series of checks are the first electrical checks to be carried out during a fault finding procedure. On completion of the service/fault finding task which has required the breaking and remaking of electrical connections then the checks 5.1 Earth continuity, 5.3 Polarity and 5.4 Resistance to earth must be repeated.

6 REPLACEMENT OF PARTS

6.1 EXPANSION VESSEL

- Turn off power supply
- Remove boiler cover, see 4.4.
- Isolate flow and return valves
- Drain boiler using fitted drain vent
- Disconnect expansion pipe
- Loosen top fixing screw and remove lower fixing screw
- Remove vessel
- Check new vessel for correct pressure 1- 1.25 bar
- Refit in reverse order.

6.2 IGNITION ELECTRODE

- Turn off power supply
- Remove boiler cover see 4.4
- Remove sealed chamber cover
- Disconnect electrode from ignition transformer
- Pull lead through grommet
- Remove electrode fixing screw
- Carefully remove electrode from burner
- Replace in reverse order.

6.3 IONISATION ELECTRODE

- Turn off power supply
- Remove boiler cover see 4.4
- Remove sealed chamber cover
- Disconnect electrode
- Remove electrode fixing screw
- Carefully remove electrode from burner
- Replace in reverse order.

6.4 MAIN BURNER

- Turn off power supply
- Isolate gas supply
- Remove boiler cover
- Remove sealed chamber cover
- Disconnect gas connection at injector
- Disconnect air sensing tube
- Disconnect two plugs to fan
- Remove ignition electrode 6.3
- Disconnect ionisation electrode
- Remove 4 x 10mm nuts securing burner to heat exchanger
- Carefully lift out burner assembly
- Refit in reverse order
- Test for gas tightness.

6.5 FAN ASSEMBLY

- Remove burner assembly as described in 6.4
- Remove 2 x 8mm bolts and loosen 2 x 8mm securing fan to burner assembly
- Remove restrictor plate and fit to new fan
- Refit in reverse order
- Recommission boiler
- Test for gas tightness.

6.6 MAIN HEAT EXCHANGER

- Turn off power supply
- Isolate gas supply
- Isolate flow and return valves
- Drain boiler using drain vent
- Remove burner assembly as described in 6.4
- Remove flue connection
- Disconnect flue sensor
- Disconnect limit stat
- Remove condensate drain connections
- Disconnect flow and return connections
- Remove two fixing brackets
- Lift out heat exchanger
- Refit in reverse order
- Recommission boiler
- Test for gas tightness.

6.7 FLUE SENSOR

- Turn off power supply
- Remove cover
- Remove sealed chamber cover
- Disconnect flue sensor
- Unscrew sensor
- Replace in reverse order.

6.8 100° SAFETY STAT

- Turn off power supply
- Remove cover
- Remove sealed chamber cover
- Disconnect 100° safety stat
- Remove fixing screws
- Refit in reverse order.

6.9 HEATING THERMISTOR (SM SENSOR)

- Turn off power supply
- Remove cover
- Isolate flow and return valves
- Drain boiler using drain vent
- Disconnect thermistor
- Unscrew thermistor (catch any water lost)
- Refit in reverse.

6.10 D.H.W. THERMISTOR (SS) SENSOR

- Turn off power supply
- Remove cover see 4.4
- Isolate cold water supply valve
- Open a D.H.W. tap
- Disconnect thermistor
- Unscrew thermistor (catch any water lost)
- Refit in reverse.

6.11 GAS VALVE

- Turn off power supply
- Isolate gas supply
- Remove boiler cover see 4.4
- Disconnect wiring from gas valve
- Disconnect sensing tube
- Remove gas valve
- Refit in reverse order ensuring seals are replaced as required
- Setting the gas valve procedure for **MURELLE HE/SYSTEM HE 20-25-30-35**:
  From the table below identify the boiler type and gas used.
  Connect flue gas analyser.
  Ensure the capacity step shutter (5 fig. 16) to be fully open then switch on the boiler.
  Press and hold the button for a few seconds to light the boiler:
  - Press the button to ensure that the boiler is on its minimum output:
  (A) Adjust the capacity step shutter (5 fig. 6) to achieve the CO_2 value shown in the table.
  (B) Adjust the OFF-SET screw (6 fig. 16) to achieve the CO_2 value shown in the table.
  - Press the button to ensure that the boiler is on its maximum output. Check the CO_2 to be within the values shown in the table, if necessary adjust with the capacity step shutter.
  - Re-check and confirm the settings at minimum and maximum output by pressing and buttons.

NATURAL GAS			
TYPE	MIN		MAX
	(A) CO_2%	**(B)** CO_2%	CO_2%
HE 20	9.1÷9.4	8.7÷9.0	8.7÷9.3
HE 25	9.1÷9.3	8.7÷9.0	8.7÷9.3
HE 30	9.1÷9.3	8.7÷9.1	8.7÷9.3
HE 35	9.5÷9.8	8.8÷9.1	8.7÷9.3

LPG			
TYPE	MIN		MAX
	(A) CO_2%	**(B)** CO_2%	CO_2%
HE 20	10.3÷10.6	9.7÷10.1	9.7÷10.3
HE 25	10.3÷10.6	9.7÷10.1	9.7÷10.3
HE 30	10.3÷10.6	9.7÷10.1	9.7÷10.3
HE 35	10.4÷10.7	9.7÷10.1	9.7÷10.3

- Setting the gas valve procedure for **MURELLE SYSTEM HE 12**:
  Connect flue gas analyser.
  Ensure the capacity step shutter (5 fig. 16) to be fully open then switch on the boiler.
  Press and hold the button for a few seconds to light the boiler:
  - Press the button to ensure that the boiler is on its minimum output:
  (A) Adjust the OFF-SET screw (6 fig. 16) to achieve the CO_2 value shown in the table.
  (B) Adjust the capacity step shutter (5 fig. 6) to achieve the CO_2 value shown in the table.
  - Press the button to ensure that the boiler is on its maximum output. Check the CO_2 to be within the values shown in the table, if necessary adjust with the capacity step shutter.
  - Re-check and confirm the settings at minimum and maximum output by

pressing ⊟ and ⊞ buttons.

NATURAL GAS			
TYPE	MIN		MAX
	(A) CO_2%	**(B)** CO_2%	CO_2%
HE 12	10.1÷10.4	8.8÷9.1	8.7÷9.3

LPG			
TYPE	MIN		MAX
	(A) CO_2%	**(B)** CO_2%	CO_2%
HE 12	10.4÷10.8	9.8÷10.1	9.6÷10.3

- Check for gas soundness.

6.12 PRINTED CIRCUIT BOARD (PCB)

- Isolate from power supply
- Remove screw securing control panel
- Lower panel to horizontal position
- Remove PCB covers
- Disconnect all wiring
- Remove PCB fixing screws
- Ensure any PCB links are matched to old board
- Reset PAR 1 and PAR 2 as per the table 3.3.1
- Refit in reverse order
- Recommission boiler.

6.13 PUMP MOTOR

- Turn off power supply
- Remove boiler cover
- Isolate flow and return valves
- Drain boiler using drain vent
- Remove plug connection
- Remove 4 x fixing screws, catch any lost water
- Refit in reverse using new gasket.

6.14 DIVERTER VALVE MICRO SWITCH

- Turn off power supply
- Remove boiler cover
- Pull off micro switch assembly in direction of wiring
- Refit in reverse order.

6.15 DOMESTIC HOT WATER HEAT EXCHANGER

- Turn off power supply
- Isolate flow and return
- Turn on D.H.W. tap
- Close cold water supply isolation valve
- Drain boiler using drain vent
- Remove diverter valve micro switch as described in 6.14
- Remove micro switch actuator from top of diverter valve
- Remove plate heat exchanger, catch any water lost
- Ensure that the four "O" rings are removed from the technil assembly
- Fit the new "O" ring supplied with the new heat exchanger to the heat exchanger
- Refit in reverse order.

6.16 DIVERTER VALVE

- Remove Diverter valve micro switch as described in 6.14
- Remove plate heat exchanger as described in 6.15
- Remove plug securing clip at RHS of diverter assembly
  NOTE: a internal spring will push off the plug. Retain
- Remove internal bush from spindle
- Remove diverter valve head securing clip
- Pull diverter valve head from assembly
- Remove spindle from assembly complete with bush and spacer
- Replace in reverse order replacing "O" rings as required.

6.17 INTERNAL AUTO AIR VENT (AAV)

- Turn off power supply
- Isolate flow and return valves
- Remove boiler cover
- Drain boiler using drain vent
- Remove AAV
- Replace in reverse order.

6.18 SAFETY VALVE

- Turn off power supply
- Isolate flow and return valves
- Remove boiler cover
- Drain boiler using drain vent
- Disconnect pipe from safety valve
- Remove safety valve securing clip
- Remove safety valve, catch any water lost
- Refit in reverse.

DIVERTER VALVE EXPLODED VIEW

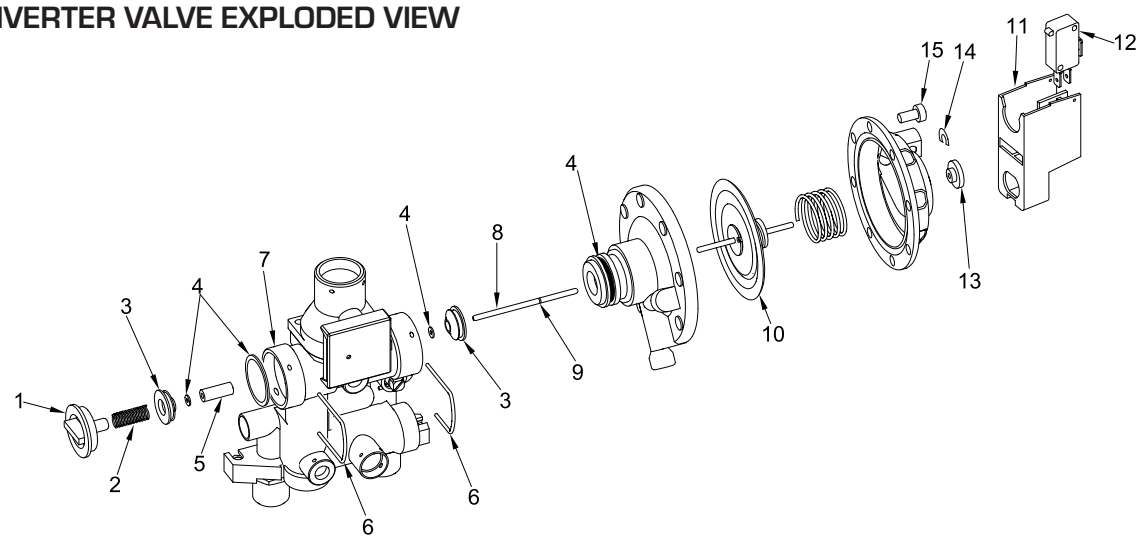

1 End cap
2 Spring
3 Bush
4 O-ring
5 Spacer
6 Securing clip
7 D.H.W. Technyl manifold
8 Spindle
9 Spindle circlip
10 Diaphragm
11 Microswitch support
12 Microswitch
13 Spindle plastic head
14 Microswitch support circlip
15 Screw

7 EXPLODED VIEWS

COD. **3830025/783** TYPE **MURELLE HE SYSTEM** DATE **28.01.2008** PAGE **1/4**

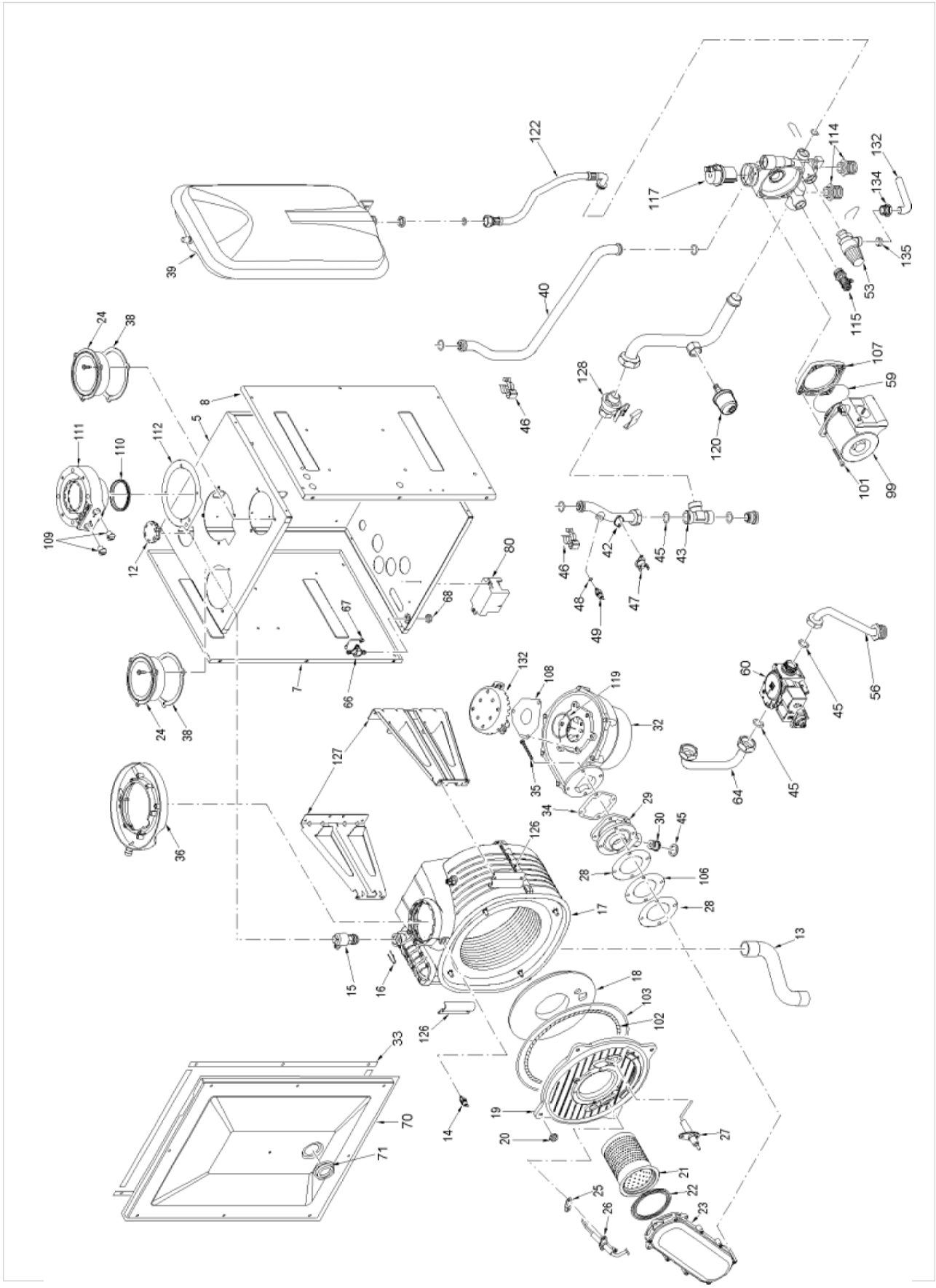

COD. **3830025/783** TYPE **MURELLE HE SYSTEM** DATE **28.01.2008** PAGE **2/4**

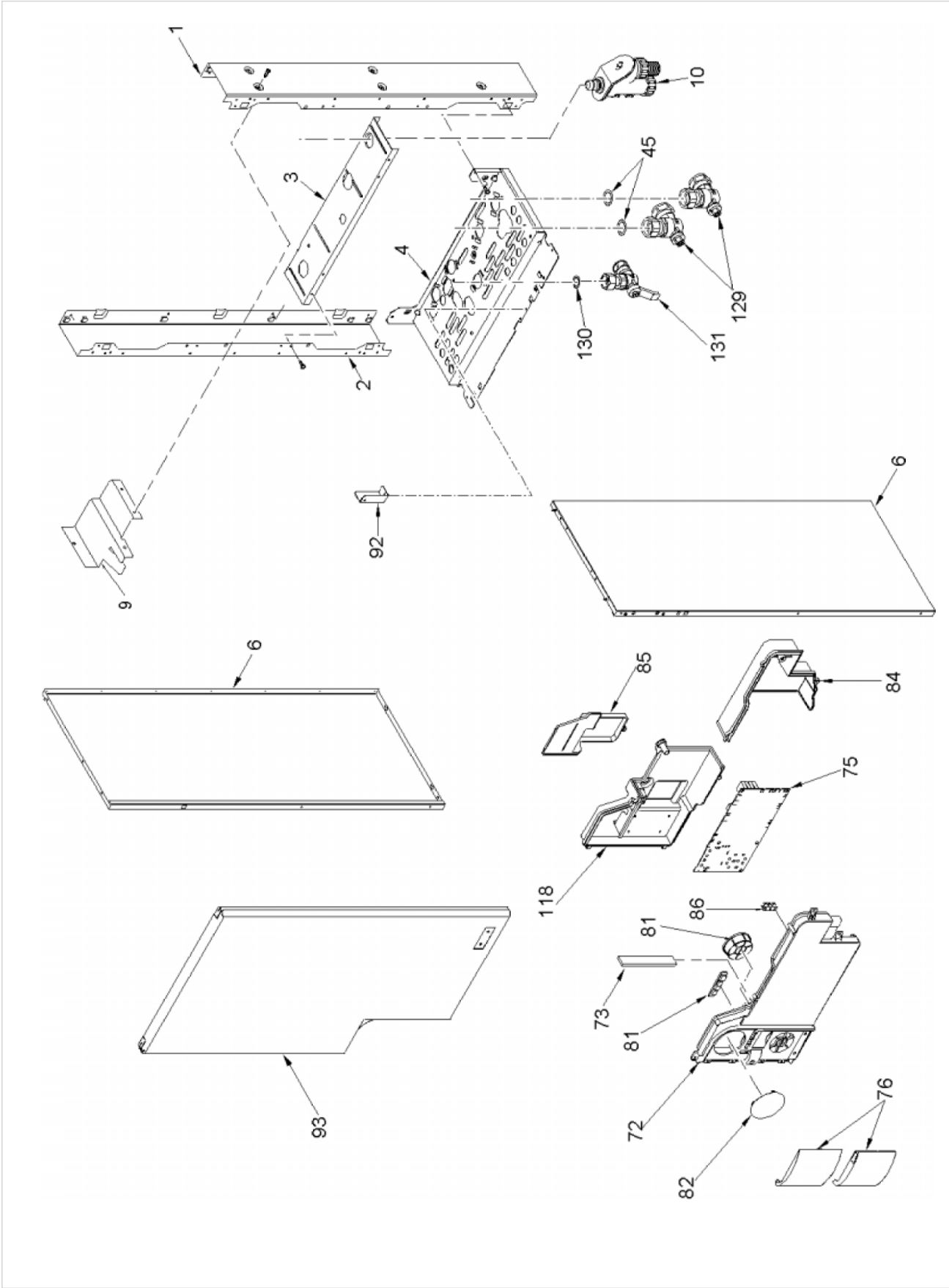

COD. **3830025/783** TYPE **MURELLE HE SYSTEM** DATE **28.01.2008** PAGE **3/4**

POSITION	CODE	DESCRIPTION	MODEL	NOTE
1	6138533	Right hand side frame part		
2	6138632	Left hand side frame part		
3	6255431	Expansion vessel lower support		
4	6138891	Frame assembly lower side		
5	6266072	Sealed chamber rear panel	12	
5 A	6266071	Sealed chamber rear panel	20-25-30-35	
6	6304430	Casing left/right side panel		
7	6266152	Sealed chamber left hand side panel		
8	6266153	Sealed chamber right hand side panel		
9	6189589	Expansion vessel fixing bracket		
10	6277205	Water trap		
12	6230960	Valve air vent knob		
13	6034155	Condensate drainage pipe		
14	6277130	NTC sensor		
15	6017212	Manual air vent		
16	6226624	Spring air vent knob		
17	6278911	Main exchanger body	12	
17 A	6278913	Main exchanger body	20-25	
17 B	6278912	Main exchanger body	30	
17 C	6278910	Main exchanger body	35	
18	6269008	Main exchanger door insulation		
19	6278853	Main exchanger door		
20	2010183	Nut for exchanger flange		
21	6278307	Premix burner	12	
21 A	6278308	Premix burner	20-25	
21 B	6278309	Premix burner	30-35	
22 •	6174817	Gasket for burner flange		
23	6278805	Air-gas hose	12-20-25	
23 A	6278806	Air-gas hose	30-35	
24	6288000	Air intake		
25 •	6174809	Gasket for ignition electrode		
26	6221631	Ignition electrode	12	
26 A	6221632	Ignition electrode	20-25-30-35	
27	6221630	Ionisation electrode	12	
27 A •	6221623	Ionisation electrode	20-25-30-35	
28	6174812	Mixer/hose gasket		
29	6274312	Air/gas mixer	12	
29 A	6274313	Air/gas mixer	20-25	

POSITION	CODE	DESCRIPTION	MODEL	NOTE
29 B	6274306	Air/gas mixer	30	
29 C	6274307	Air/gas mixer	35	
30	6274126	Burner nozzle Ø 4,00 natural gas	12	
30 A	6274123	Main burner nozzle Ø 5,00	20-25 nat.gas/ 30 LPG	
30 B	6274124	Burner nozzle ø 7,00 natural gas	30	
30 C	6274125	Burner nozzle ø 8,50 natural gas	35	
30 D	6274129	Main burner nozzle Ø 3,10 LPG	12	
30 E	6274128	Main burner nozzle Ø 3,70 LPG	20-25	
30 F	6274127	Main burner nozzle Ø 5,20 LPG	35	
32	6261408	Fan	12-20-25-30	
32 A	6261405	Fan	35	
33	5192200	Gasket for sealed chamber		
34	6174816	Gasket for fan flange		
35	2000507	Screw TE M5x50		
36	6288010	Size pick up condensate		
38	6028707	Air intake gasket		
39	5183712	Rectang. expansion vessel 8 l.	12-20-25	
39 A	5183722	Rectang. expansion vessel 10 l.	30-35	
40	6227426	C.H. return pipe	12	
40 A	6227425	C.H. return pipe	20-25-30-35	
42	6277723	Pipe connect. exchanger-C.H filter	12-20-25-30	
42 A	6277721	Pipe connect. exchanger-C.H filter	35	
43 •	6295500	C.H. filter 3/4"M x 3/4"M		
45	2030228	Gasket Ø 17x24x2		
46	6226619	Spring for heat exchanger connection		
47 •	6146701	100°C safety stat		
48 •	6022010	Sensor gasket		
49 •	6231351	Plunged sensor		
53 •	6040201	Pressure relief valve		
56	6226877	Gas inlet pipe		
59	6226416	Gasket		
60	6243823	SIT gas valve type		
64	6277408	Pipe connecting gas valve-mixer	12-20-25-30	
64 A	6277412	Pipe connecting gas valve-mixer	35	
66	6280500	3-ways junct. with press. test nipple		
67	6280550	Cap for 3-ways junction		
68	6146303	Brass Nut 1/8"		
70	6288314	Sealed chamber front panel		

• Recommended stock parts - Componenti da tenere a scorta

POSITION	CODE	DESCRIPTION	MODEL	NOTE
71	6001210	Peephole		
72	6304700	Control panel		
73	6305160	Guidelight with led		
75	6301409	Main PCB		
76	6304890	Flap door assembly		
80	6098315	Ignition transformer		
81	6305120	Kit Rubber button		
82	6247327	Cap for time programmer		
84	6305010	Connection cover		
85	6305020	Time programmer cover		
86	2211610	Earth faston		
92	6189594	Control panel supporting bracket		
93	6304231	Casing front panel		
99	6272305	Circulating pump WSC F60/45 motor		
101	2000201	Screw M5x40		
102	6278968	Glass fibre sealing cord		
103	6278967	Combustion chamber O-ring		
106	6239206	Mixer closing plate		
107	6281511	Motor ring pump WSC F60		
108	6028643	Air diaphragm Ø 27	20 ONLY	
108 A	6028646	Air diaphragm	30 ONLY	
109	6147409	Air/smoke manifold plug M14x1.5		
110	6248817	Lip seal for Ø 60 pipe		
111	6287912	Air/smoke manifold		
112	6028710	Air/smoke manifold gasket		
114	6120507	C.H.flow/return straight fitting		
117	• 6013101	Automatic air vent		
118	6305000	Cover		
119	2030226	Gasket Ø 10,2x14,8x2		
120	• 6273603	Water pressure transducer		
122	6017312	Flexible pipe		
126	6010829	Main exchanger fixing bracket		
127	6010832	Main exchanger supporting bracket	12	
127 A	6010830	Main exchanger supporting bracket	20-25	
127 B	6010833	Main exchanger supporting bracket	30	
127 C	6010831	Main exchanger supporting bracket	35	
128	• 6149304	Flow water switch	12-20-25	
128 A	6149315	Flow water switch	30-35	

POSITION	CODE	DESCRIPTION	MODEL	NOTE
129	6177505	Ball cock 3/4" x 22		
130	2030227	Gasket Ø 12x18x2		
131	6177530	Gas cock 3/4" F x 15		
132	6028645	Air diaphragm	12 ONLY	
	6299991	4 pole cable connector		
	6316202	Connector 4 poli CN6		
	6316203	Connector 4 poli CN4		
	6316204	Connector 8 poli CN7		
	6316210	9 pole cable connector CN3		
	6316212	5+4 pole cable connector CN1		
	6316213	3 pole cable connector CN14		
	6281507	Split pin kit for hydraulic group		
	6316200	Connector 2 poli CN5		
	6281534	Gaskets kit		
	• 6281506	O-ring kit for hydraulic group		
	5187380	Technyl hydraulic group		
	5197170	Complete control pannel		
	6316214	14 pole cable connector		
	6245339	Divertor valve connector		
	6316201	Connector 4 poli CN9		
	6316227	5 pole cable connector CN10	for expansion board	
	6316226	6 pole cable connector CN11	for programmer clock	
	5185132	Conversion kit to LPG	12	
	• 5185133	Conversion kit to LPG	20-25	
	5185131	Conversion kit to LPG	30	
	5185134	Conversion kit to LPG	35	

Prodotti di Riferimento:
Products reference:

8106360 : Murelle 12 HE System metano
8106362 : Murelle 20 HE System metano
8106364 : Murelle 25 HE System metano
8106366 : Murelle 30 HE System metano
8106368 : Murelle 35 HE System metano

Verificare la corrispondenza con la targhetta caldaia.
Check the correspondence with the boiler data plate.

• Recommended stock parts - Componenti da tenere a scorta

COD. **3830024/782** TYPE **MURELLE HE BF GB** DATE **28.01.2008** PAGE **1/4**

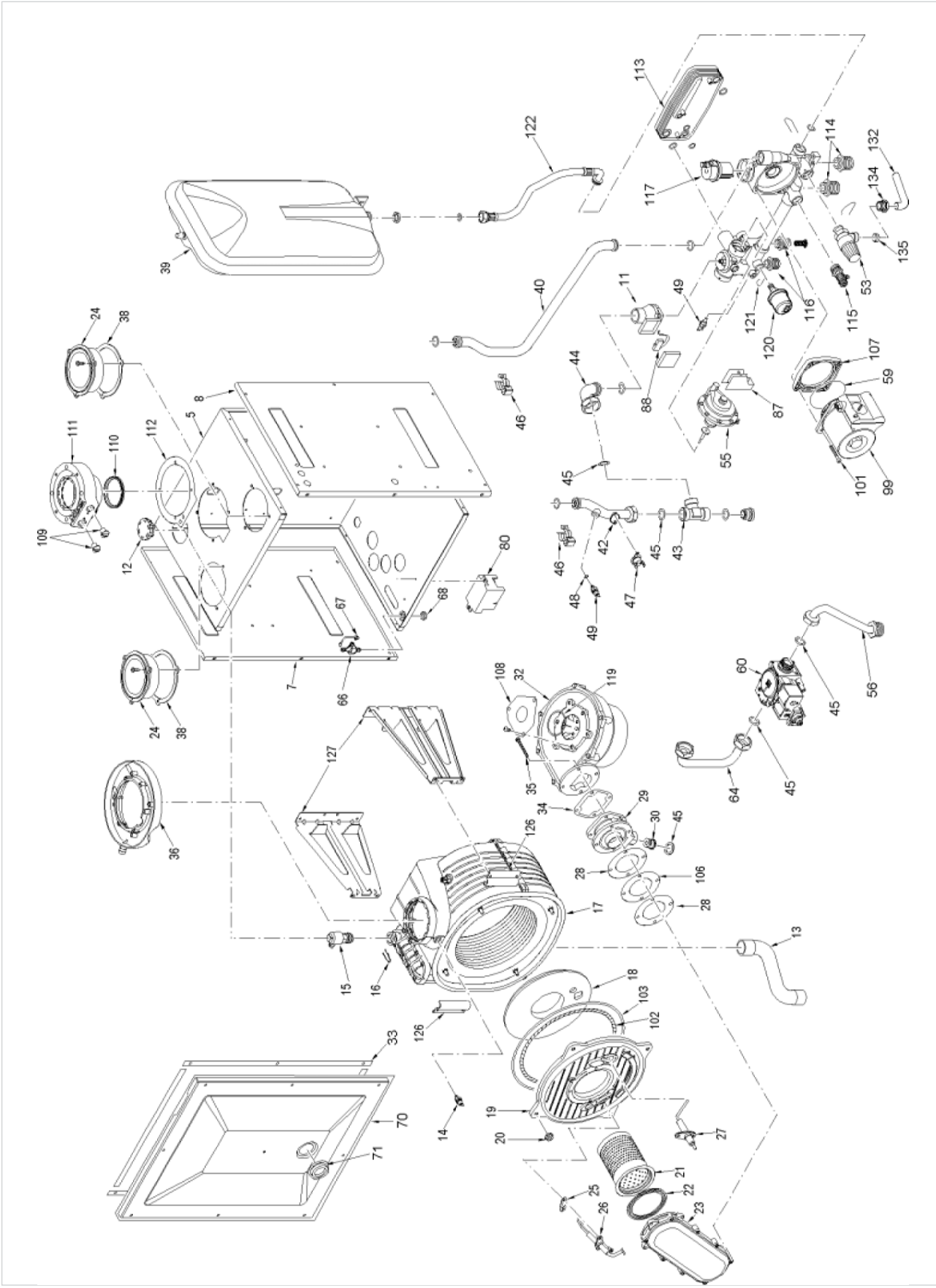

COD. **3830024/782** TYPE **MURELLE HE BF GB** DATE **28.01.2008** PAGE **2/4**

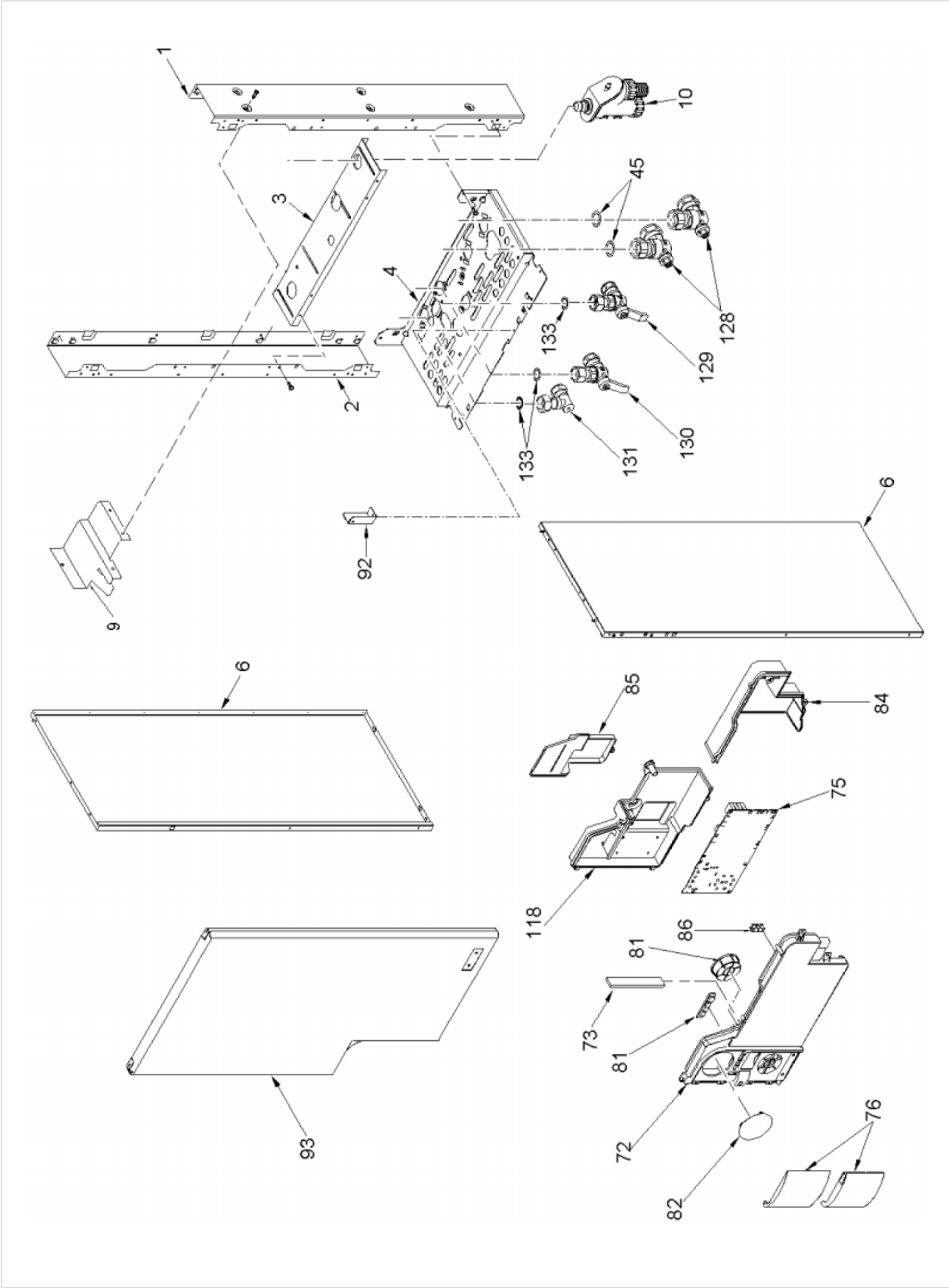

COD. **3830024/782** TYPE **MURELLE HE BF GB** DATE **28.01.2008** PAGE **3/4**

POSITION	CODE	DESCRIPTION	MODEL	NOTE
1	6138533	Right hand side frame part		
2	6138632	Left hand side frame part		
3	6255431	Expansion vessel lower support		
4	6138891	Frame assembly lower side		
5	6266071	Sealed chamber rear panel		
6	6304430	casing left/right side panel		
7	6266152	Sealed chamber left hand side panel		
8	6266153	Sealed chamber right hand side panel		
9	6189589	Expansion vessel fixing bracket		
10	6277205	Water trap		
11 •	6281502	Flow water switch spare parts		
12	6230960	Valve air vent knob		
13	6034155	Condensate drainage pipe		
14	6277130	NTC sensor		
15	6017212	Manual air vent		
16	6226624	Spring air vent knob		
17	6278913	Main exchanger body	25	
17 A	6278912	Main exchanger body	30	
17 B	6278910	Main exchanger body	35	
18	6269008	Main exchanger door insulation		
19	6278853	Main exchanger door		
20	2010183	Nut for exchanger flange		
21	6278308	Premix burner	25	
21 A	6278309	Premix burner	30-35	
22 •	6174817	Gasket for burner flange		
23	6278805	Air-gas hose	25	
23 A	6278806	Air-gas hose	30-35	
24	6288000	Air intake		
25 •	6174809	Gasket for ignition electrode		
26	6221632	Ignition electrode		
27 •	6221623	Ionisation electrode		
28	6174812	Mixer/hose gasket		
29	6274313	Air/gas mixer	25	
29 A	6274306	Air/gas mixer	30	
29 B	6274307	Air/gas mixer	35	
30	6274123	Burner nozzle Ø 5,00	25 nat. gas/30 LPG	
30 A	6274124	Burner nozzle ø 7,00 natural gas	30	
30 B	6274125	Burner nozzle ø 8,50 natural gas	35	

POSITION	CODE	DESCRIPTION	MODEL	NOTE
30 C	6274128	Burner nozzle ø 3,70 LPG	25	
30 D	6274127	Burner nozzle ø 5,20 LPG	35	
32	6261408	Fan	25-30	
32 A	6261405	Fan	35	
33	5192200	Gasket for sealed chamber		
34	6174816	Gasket for fan flange		
35	2000507	Screw TE M5x50		
36	6288010	Size pick up condensate		
38	6028707	Air intake gasket		
39	5183712	Rectang. expansion vessel 8 l.	25	
39 A	5183722	Rectang. expansion vessel 10 l.	30-35	
40	6227425	C.H. return pipe		
42	6277723	Pipe connect. exchanger-C.H filter	25-30	
42 A	6277721	Pipe connect. exchanger-C.H filter	35	
43 •	6295500	C.H. filter 3/4"M x 3/4"M		
44	6277722	Pipe connect. C.H. filter-C.H. flow		
45	2030228	Gasket Ø 17x24x2		
46	6226619	Spring for heat exchanger connection		
47 •	6146701	100°C safety stat		
48 •	6022010	Sensor gasket		
49 •	6231351	Plunged sensor		
53 •	6040201	Pressure relief valve		
55 •	6281504	Divertor valve		
56	6226877	Gas inlet pipe		
59	6226416	Gasket EP709 for Dab		
60	6243823	SIT gas valve type		
64	6277408	Pipe connecting gas valve-mixer	25-30	
64 A	6277412	Pipe connecting gas valve-mixer	35	
66	6280500	3-ways junct. with press. test nipple		
67	6280550	Cap for 3-ways junction		
68	6146303	Brass Nut 1/8"		
70	6288314	Sealed chamber front panel		
71	6001210	Peephole		
72	6304700	Control panel		
73	6305160	Guidelight with led		
75	6301409	Main PCB		
76	6304890	Flap door assembly		
80	6098315	Ignition transformer		

• Recommended stock parts - Componenti da tenere a scorta

POSITION	CODE	DESCRIPTION	MODEL	NOTE
81	6305120	Kit Rubber button		
82	6247327	Cap for time programmer		
84	6305010	connection cover		
85	6305020	Time programmer cover		
86	2211610	Earth faston		
87	5191900	Divertor valve microswitch + support		
88 •	6131401	Microswitch for flowmeter		
92	6189594	Control panel supporting bracket		
93	6304231	Casing front panel		
99	6272305	Circulating pump WSC F60/45 motor		
101	2000201	Screw M5x40		
102	6278968	Glass fibre sealing cord		
103	6278967	Combustion chamber O-ring		
106	6239206	Mixer closing plate		
107	6281511	Motor ring pump WSC F60		
108	6028646	Air diaphragm	30 ONLY	
109	6147409	Air/smoke manifold plug M14x1.5		
110	6248817	Lip seal for Ø 60 pipe		
111	6287912	Air/smoke manifold		
112	6028710	Air/smoke manifold gasket		
113	6265603	Plate-type heat exchanger		
113 A	6265604	Plate-type heat exchanger		
113 B	6265606	Plate-type heat exchanger		
114	6120507	C.H.flow/return straight fitting		
115 •	6017250	Manual air vent 1/4"		
116	6120508	D.H.W.inlet/outlet straight fitting		
117 •	6013101	Automatic air vent		
118	6305000	Cover		
119	2030226	Gasket Ø 10,2x14,8x2		
120	6273605	Water pressure transducer		
121	6226620	Transducer fixing spring		
122	6017312	Flexible pipe		
126	6010829	Main exchanger fixing bracket		
127	6010830	Main exchanger supporting bracket	25	
127 A	6010833	Main exchanger supporting bracket	30	
127 B	6010831	Main exchanger supporting bracket	35	
128	6177505	Ball cock 3/4" x 22		
129	6177530	Gas cock 3/4" F x 15		

POSITION	CODE	DESCRIPTION	MODEL	NOTE
130	6177506	Ball cock 1/2" x 15		
131	6142330	Quarter bend 1/2" x 15		
132	6157602	Pressure relief valve drain pipe		
133	2030227	Gasket Ø 12x18x2		
134	6168401	Locking nut for pipe Ø 15		
135	6100202	Ogive for pipe Ø 15		
	6299991	4 pole cable connector CN12		
	6316202	Connector 4 poli CN6		
	6316203	Connector 4 poli CN4		
	6316204	Connector 8 poli CN7		
	6316210	9 pole cable connector CN3		
	6316211	14 pole cable connector CN2		
	6316212	5+4 pole cable connector CN1		
	6316213	3 pole cable connector CN14		
	5197100	Complete control panel		
	6281507	Split pin kit for hydraulic group		
	6281534	Gaskets kit		
•	6281506	O-ring kit for hydraulic group		
	6316200	Connector 2 poli CN5		
	6316227	5 pole cable connector CN10	for expansion board	
	6316226	6 pole cable connector CN11	for programmer clock	
	5187349	Technyl hydraulic group	30-35	
	5184817	Fitting cocks kit		
•	5185133	Conversion kit to LPG	25	
	5185131	Conversion kit to LPG	30	
	5185134	Conversion kit to LPG	35	

Products reference:

8106310 : Murelle HE 25 BF GB metano
8106312 : Murelle HE 30 BF GB metano
8106314 : Murelle HE 35 BF GB metano

Check the correspondence with the boiler data plate.

• Recommended stock parts - Componenti da tenere a scorta

Dealing with Condensate

Five suitable drainage points

1. Internal drain stack pipe
2. Waste water pipe *
3. External drain or gully *
4. Rainwater hoppers that carry both rain water and foul water *
5. Purpose-made soakaways

* Care should be taken not to contaminate any "Grey Water Systems"

Pipework

Condensate pipework should be plastic, same as used for standard wastewater plumbing.
Similarly the drainage system where the condensate discharges to should also be resistant to the acidic condensate.
Connection to the internal trap in the boiler can be achieved by using a 20mm solvent weld socket.
Pipework should be kept as short as possible.
External runs should be avoided, but when necessary be a minimum of 3 meters in 32mm diameter pipework and lagged to avoid freezing, this also applies to pipe runs in unheated areas such as garages.
To reduce the possibility of condensate being trapped in the pipe, the number of bends should be kept to a minimum.
Pipework must be angled down from the boiler with a fall of at least 2.5.
The pipework must be supported at a distance of 0.5m for inclined runs and 1.0m for vertical runs.

Condensate traps

Where the condensate drain is not sealed to the discharge connection a trap will be required. The water seal should be 38mm or more for external discharge and 75mm or more for internal discharge. When connecting to a external stack the trap should be located within the building.

Stack Pipes

Condensate connections should be at least 450mm above any bend at the bottom of a stack pipe in a single or multi-story dwelling up to 3 storeys.
There are specific requirements when connecting to a stack pipe serving
multi-storey buildings greater than 3 storeys.
All connections to stack pipes should avoid across flow between other Branch pipes.

Soakaways

Any soakaways have to be purpose-made and located as close to the boiler as possible, but clear of the buildings foundations and any buried services. The best option is to purchase a soakaway from a drainage manufacturer and install it to the manufacturers recommendation.

Cod. 6274264A - 05/09 - Documentation Dpt.

Sime Ltd
1a Blue Ridge Park
Thunderhead Ridge
Glasshoughton, Castleford, WF10 4UA

Customer Service: 0870 9911114
Sales: 0870 9911116
Technical Support: 0870 9911117
Main Fax: 0870 9911115

www.sime.ltd.uk