INSTALLER INSTRUCTIONS

CONTENTS

1 DESCRIPTION OF THE BOILER ..... pag. 116
2 INSTALLATION ..... pag. 119
3 CHARACTERISTICS ..... pag. 130
4 USE AND MAINTENANCE ..... pag. 133

spares & parts online
IBASIS.co.uk©

CE IPX4D

Planet Dewy 60 BFR:

Gas Council number 41-283-03

Planet Dewy 100 BFR:

Gas Council number 41-283-11

IMPORTANT

When carrying out commissioning of the boiler, you are highly recommended to perform the following checks:

- Make sure that there are no liquids or inflammable materials in the immediate vicinity of the boiler.
- Make sure that the electrical connections have been made correctly and that the earth wire is connected to a good earthing system.
- Open the gas tap and check the soundness of the connections, including that of the burner.
- Make sure that the boiler is set for operation for the type of gas supplied.
- Check that the flue pipe for the outlet of the products of the combustion is unobstructed and has been properly installed.
- Make sure that any shutoff valves are open.
- Make sure that the system is charged with water and is thoroughly vented.
- Check that the circulating pump is not locked.
- Purge the system, bleeding off the air present in the gas pipe by operating the pressure relief valve on the gas valve inlet.

FONDERIE SIME S.p.A. of Via Garbo 27 - Legnago (VR) - Italy declares that its hot water boilers, which bear the CE mark under Gas Directive 90/396/CEE and are fitted with a safety thermostat calibrated to a maximum of 110°C, **are not subject** to application of PED Directive 97/23/CEE as they meet the requirements of article 1 paragraph 3.6 of the Directive.

sime®

1 DESCRIPTION OF THE BOILER

1.1 INTRODUCTION

Boilers (supplied as **Class B** devices, and can be made room sealed **Class C**) are pre-mixed condensation heating modules intended only for heating, designed to work singularly or in sequence/cascade autonomously. They are designed and constructed to meet European directives 90/396/CEE, 2004/108/CEE, 2006/95/CEE and 92/42/CEE.

Upon request, a control unit for a maximum of four boilers can be supplied for sequence/cascade installation.

1.2 DIMENSIONS

1.2.1 PLANET DEWY 60 BFR

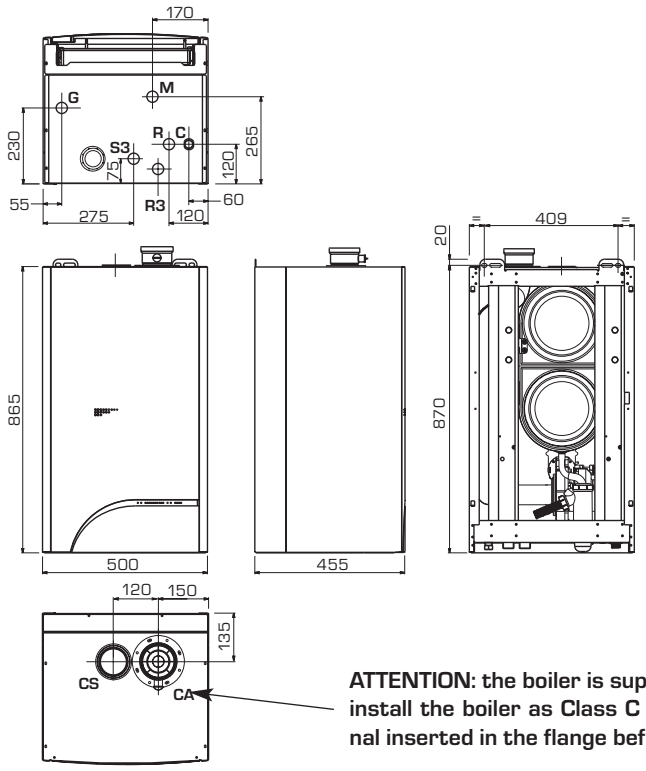

R	C.H. return	G 1" (UNI-ISO 228/1)
M	C.H. flow	G 1" (UNI-ISO 228/1)
G	Gas connection	G 3/4" (UNI-ISO 228/1)
C	Filling system	G 1/2" (UNI-ISO 228/1)
R3	Tank return	G 1" (UNI-ISO 228/1)
S3	Condensation outlet	ø 25
CA	Inlet	ø 80
CS	Outlet	ø 80

ATTENTION: the boiler is supplied as Class B device. To install the boiler as Class C device, remove the terminal inserted in the flange before connecting the intake.

Fig. 1

1.2.2 PLANET DEWY 100 BFR

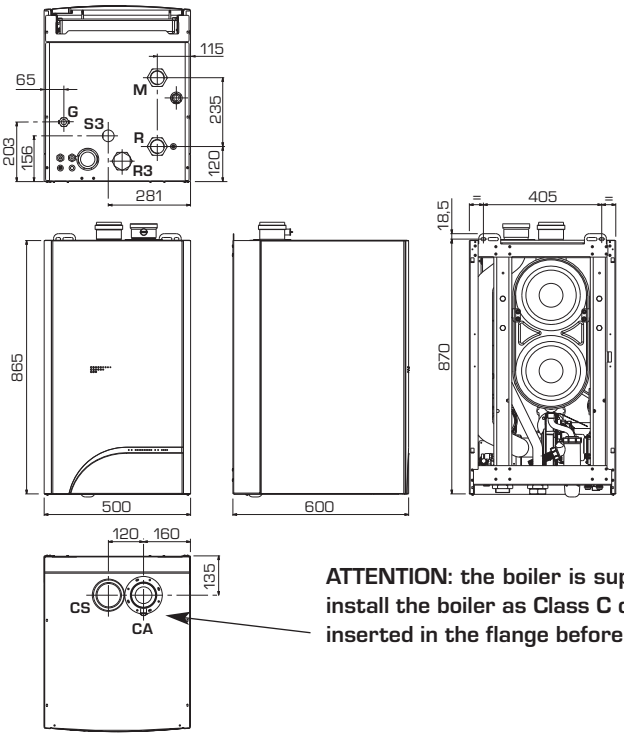

R	C.H. return	G 1 1/2" (UNI-ISO 228/1)
M	C.H. flow	G 1 1/2" (UNI-ISO 228/1)
G	Gas connection	G 3/4" (UNI-ISO 228/1)
R3	Tank return	G 1 1/2" (UNI-ISO 228/1)
S3	Condensation outlet	ø 25
CA	Inlet	ø 80
CS	Outlet	ø 80

ATTENTION: the boiler is supplied as Class B device. To install the boiler as Class C device, remove the terminal inserted in the flange before connecting the intake.

Fig. 1/a

1.3 MAIN COMPONENTS

1.3.1 PLANET DEWY 60 BFR

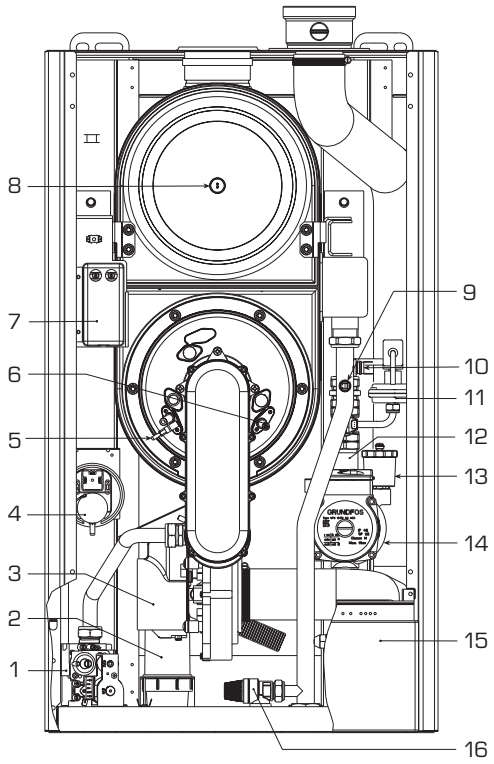

KEY
1 Gas valve
2 Condensation drain siphon
3 Fan
4 Air pressure switch
5 Ignition electrode
6 Detection electrode
7 Ignition transformer
8 Exhaust thermostat
9 Heating probe (SM)
10 Safety thermostat 100°C
11 Differential pressure switch
12 Non return valve
13 Auto Air Vent
14 Pump
15 Control panel
16 Safety valve 4 BAR

Fig. 2

1.3.2 PLANET DEWY 100 BFR

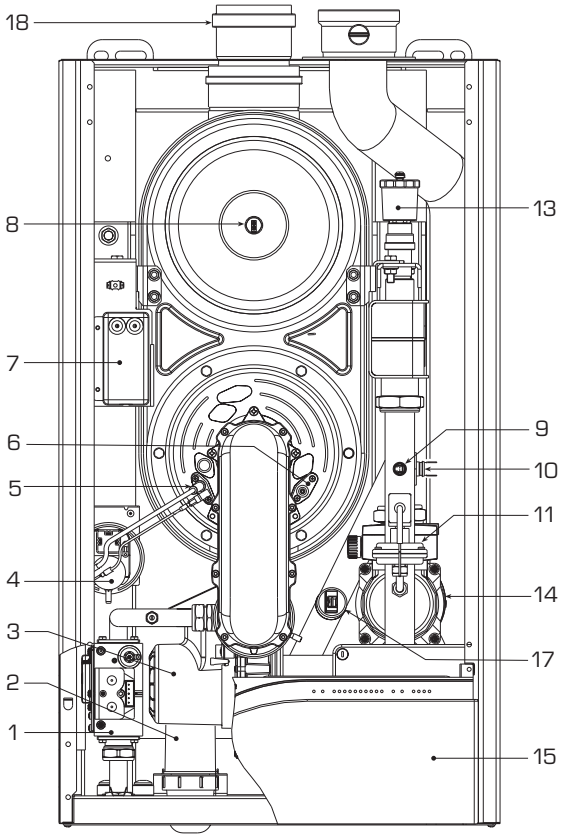

KEY
1 Gas valve
2 Condensation drain siphon
3 Fan
4 Air pressure switch
5 Ignition electrode
6 Detection electrode
7 Ignition transformer
8 Exhaust thermostat
9 Heating probe (SM)
10 Safety thermostat 100°C
11 Differential pressure switch
13 Auto Air Vent
14 Pump
15 Control panel
17 Water pressure transducer
18 Flue Reducer 100/80

Fig. 2/a

1.4 TECHNICAL FEATURES

		PLANET DEWY 60 BFR	PLANET DEWY 100 BFR
Heat output nominal (80-60°C)	kW (kcal/h)	56.5 (48,600)	94.2 (81,000)
Heat output nominal (50-30°C)	kW (kcal/h)	62.0 (53,400)	103.0 (88,600)
Heat output minimum G20 (80-60°C)	kW (kcal/h)	17.0 (14,600)	29.3 (25,200)
Heat output minimum G20 (50-30°C)	kW (kcal/h)	19.0 (16,300)	32.5 (27,950)
Heat output minimum G31 (80-60°C)	kW (kcal/h)	22.6 (19,500)	29.3 (25,200)
Heat output minimum G31 (50-30°C)	kW (kcal/h)	25.4 (21,800)	32.5 (27,950)
Nominal heat output	kW (kcal/h)	58.0 (49,900)	96.6 (83,100)
Minimum heat output G20	kW (kcal/h)	17.4 (15,000)	30.0 (25,800)
Minimum heat output G31	kW (kcal/h)	23.2 (19,900)	30.0 (25,800)
Efficiency minimum/nominal output (80-60°C)	%	97.6 - 97.5	97.7 - 97.5
Efficiency minimum/nominal output (50-30°C)	%	109.3 - 107.0	108.8 - 106.4
30% yield (50-30°C)	%	109.8	109.0
Termal efficiency (CEE 92/42 directive)		★★★★	★★★★
Class NOx		5	5
Smokes temperature maximum (80-60°C)	°C	70	70
Smokes temperature minimum (80-60°C)	°C	62	62
Smokes temperature maximum (50-30°C)	°C	50	50
Smokes temperature minimum (50-30°C)	°C	32	32
Smokes flow	kg/h	97	166
CO_2 maximum/minimum G20	%	9.0/9.0	9.0/9.0
CO_2 maximum/minimum G31	%	10.0/10.0	10.0/10.0
Maximum pressure exhaust manifold output	Pa	110	170
Adsorbed power consumption	W	198	330
Electrical protection grade		IPX4D	IPX4D
Losses after shutdown at 50°C	W/h	134	195
CE certification	n°	1312BP4141	1312BP4141
Category		II_{2H3P}	II_{2H3P}
Category in FRANCE		II_{2Er3P}	II_{2Er3P}
Category in BELGIUM		$I_{2E(S)B}$ - I_{3P}	$I_{2E(S)B}$ - I_{3P}
Type		B_{23-53} / $B_{23P-53P}$ / $C_{13-33-43-53-83}$	B_{23-53} / $B_{23P-53P}$ / $C_{13-33-43-53-83}$
C.H.			
Maximum water head	bar	4	5
Maximum temperature	°C	85	85
Water content boiler	l	4.8	8.2
C.H. setting range (D.H.W. setting range)	°C	20/80 (30/60)	20/80 (30/60)
GAS PRESSURE END NOZZLES			
Gas supply pressure G20/G25	mbar	20/25	20/25
Gas supply pressure G31	mbar	37	37
Nozzles quantity	n°	1	1
Nozzles diameter G20/G25	ø	9,3	11.0
Nozzles diameter G31	ø	6,7	8.4
Gas consumption nominal/minimum G20	m^3/h	6.14/1.84	10.22/3.17
Gas consumption nominal/minimum G31	kg/h	4.51/1.80	7.50/2.33
WEIGHT	kg	61	92

2 INSTALLATION

The boiler must be installed in a fixed location and only by specialized and qualified firms in compliance with all instructions contained in this manual.
Furthermore, the installation must be in accordance with current standards and regulations.

2.1 BOILER ROOM

The boilers can be installed in boiler rooms whose size and requirements meet current regulations.
Furthermore, vents, with surface areas at least 3.000 sq. cm or 5.000 sq. cm for gas with density over 0.8, must be installed in the outer walls for room ventilation.

2.2 INSTALLATION

For single installations, it is also possible to order an optional compensator kit (code 8101520 for the version **"60 BFR"** and cod. 8101523 for the version **"100 BFR"**).
The kit can be fitted on accumulation boilers with a capacity equivalent to or above 80 liters. For installation for single or sequence/cascade operations, refer to the example in fig. 3.
With control unit code 8096301, supplied by Sime upon request, a maximum of four boilers can be controlled. The control unit kit is supplied with assembly and use instructions.

Single installation with kit optional code 8101520 for "60 BFR"

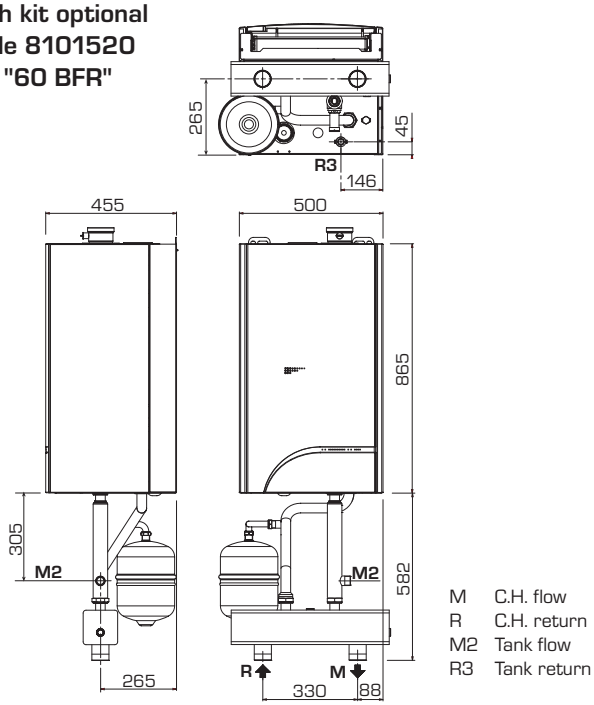

Single installation with kit optional code 8101523 for "100 BFR"

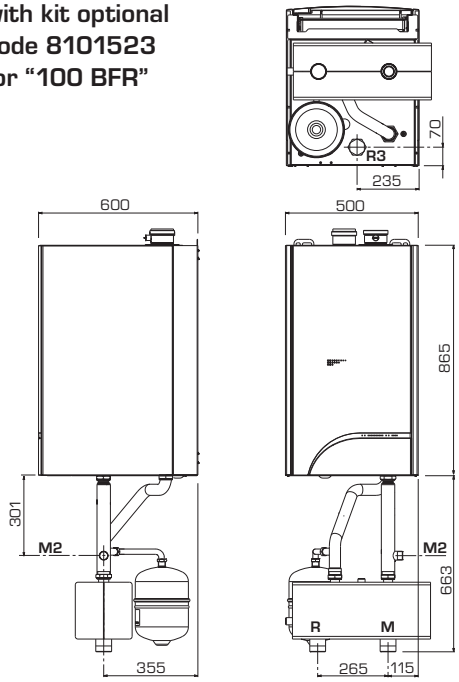

M C.H. flow
R C.H. return
M2 Tank flow
R3 Tank return

WARNING:
- **In both single and sequence/cascade installation, the heating system must be equipped with a hydraulic separator and safety components.**
- **When replacing one or more boilers in existing plants, it is advisable to install a heat exchanger to separate the boiler circuit from the secondary circuits. See the pressure curve for the boiler supply shown in figure 14.**

Installation in sequence/cascade

R C.H. return
M C.H. flow
G Gas connection
S3 Condensation outlet

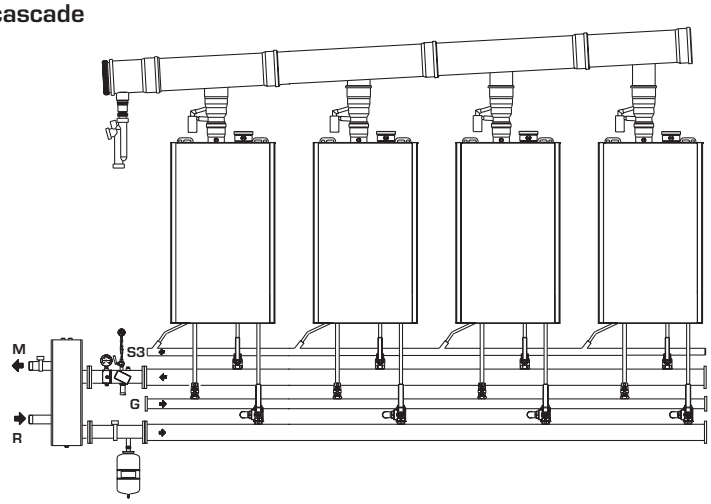

Fig. 3

2.3 CONNECTING UP SYSTEM

To protect the heat system from being damaged by corrosion, incrustation or deposits, after installation it is extremely important to clean the system using suitable products such as, for example, Sentinel X300 or X400.
Complete instructions are provided with the products but, for further information, you may directly contact SENTINEL PERFORMANCE SOLUTIONS LTD.
For long-term protection agains corrosion and deposits, the use of inhibitors such as Sentinel X100 is recommended after cleaning the system.
It is important to check the concentration of the inhibitor after each system modification and during maintenance following the manufacturer's instructions (specific tests are available at your dealer).
The safety valve drain must be connected to a collection funnel to collect any discharge during interventions.
WARNING: Failure to clean the heat system or add an adequate inhibitor invalidates the device's warranty.
Gas connections must be made in accordance with current standards and regulations. When dimensioning gas pipes from the meter to the module, both capacity volume (consumption) in m^3/h and gas density must be taken into account.
The sections of the piping making up the system must be such as to guarantee a supply of gas sufficient to cover the maximum demand, limiting pressure loss between the gas meter and any apparatus being used to not greater than:
- 1.0 mbar for family II gases (natural gas);
- 2.0 mbar for family III gases (butane or propane).

A sticker inside the module includes identification and gas type data specific to the module.

2.3.1 Condensation drain installation.

A siphoned drain must be connected to the civil drain by a pipe with minimum 5 mm per meter gradient for condensation collection.

Only normal plastic civil drain pipes are suitable to convey condensation to the building's sewer drain.

2.3.2 Gas pipe filter

The gas valve is fitted with a standard filter. This filter is not capable of filtering all impurities and to prevent poor gas valve operation or failure of any gas valve safety feature, it is advisable to fit a suitable filter on the gas supply pipe.

2.5 FILLING THE SYSTEM

Cold system filling pressure must be 1 bar. The system must be filled slowly so that air bubbles are released through the specific escapes.

2.6 EXHAUST

The boiler is supplied with a 80mm gasket, which must be fitted over the exhaust terminal prior to the flue being installed. (11 fig. 4-4/a-4/b).

2.6.1 Type B (fig. 4)

If the inlet is not connected, the boiler should be regarded a Class B device. When installing the boiler in locations where it needs to be protected from water, replace the intake terminal inserted in the flange with terminal code 8089510. For information on how to configure the boiler in this mode see figure 4.
The maximum overall length of ø 80 exhaust flues is determined by the load losses of the single accessories installed and should not exceed 16 mmH_2O ("60 BFR") and 28 mmH_2O ("100 BFR").

2.6.2 Type C (figg. 4/a-4/b)

The boiler becomes a Class C device when the intake terminal is removed from the flange and the intake is connected to separate exhaust ducts (fig. 4) or with coaxial exhaust (fig. 4/b).

Type B

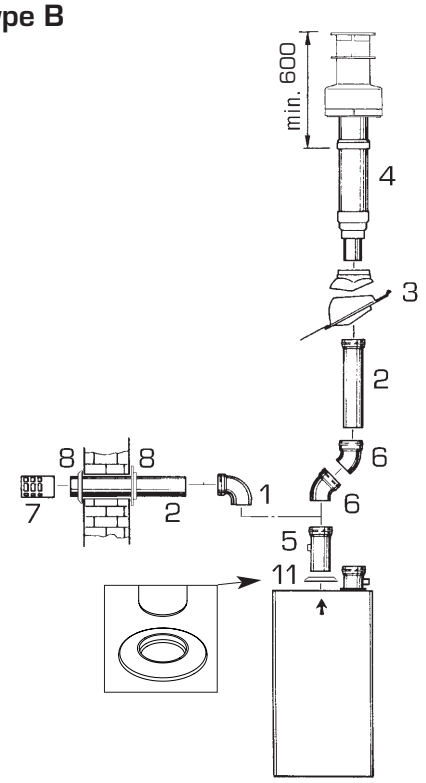

KEY
1 90° MF polypr. curve (6 pcs.) code 8077450
2 a Polypr. extension L.1000 (6 pcs.) code 8077351
2 b Polypr. extension L. 500 (6 pcs.) code. 8077350
3 Hinged tile code 8091300
4 Roof Terminal kit L 1285 code 8091205
5 Polypropylene extension L. 250 with test outlet code 6296513
6 45° MF polypr. curve (6 pcs.) code. 8077451
7 Exhaust terminal code 8089501
8 Internal-external ring nut kit code 8091500
11 Rubber gasket ø 80 (supplied as standard)

ø 80 ACCESSORY LOAD LOSS TABLE

	Load loss (mm H_2O)	
	"60 BFR"	"100 BFR"
90° MF polypropylene curve	1,30	3,00
45° MF polypropylene curve	0,70	2,00
Polypr. extension L. 1000	0,60	1,20
Polypr. extension L. 500	0,30	0,60
Roof exit terminal L. 1381	1,20	4,30
Exhaust terminal	1,30	3,60
Polypropylene extension L. 250	0,15	0,30

WARNING: Before installing accessories, lubricate the internal part of gaskets with silicon-based products. Avoid using oils and greases.

Fig. 4

2.6.3 Maximum usable length for separate ø 80 flues

The maximum overall length of ø 80 suction and exhaust flues is determined by the load losses of the single accessories installed and should not exceed 16 mmH2O ("60 BFR") and 28 mmH2O ("100 BFR").

When the length of the flues ranges between 11 and 16 mm H2O (**"60 BFR"**) - 17 and 27 mm H2O (**"100 BFR"**), it is necessary to adjust trimmer "MAX" on the fan board and set the "Max. air Δp" values provided in paragraph 4.3 in order to ensure a correct operation.

2.6.4 Maximum usable length for coaxial ø 80/125 flues

In installations with ø 80/125 coaxial exhaust, the maximum horizontal length including the 90° curve, should not exceed 5 m ("60 BFR") and 2 m ("100 BFR"). For roof exits it should not exceed 8 m along vertical for the "60 BFR" and 3 m along vertical for the version "100 BFR".

In the version **"60 BFR"** when the length of the flue ranges from 2 to 5 m horizontally and from 4 to 8 m vertically, it is necessary to adjust trimmer "MAX" on the fan board

Type C (separate ø 80 flues)

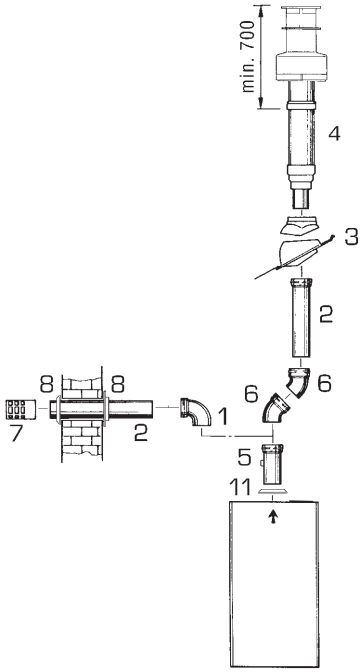

Type C (separate ø 80 flues and coaxial exhaust terminal)

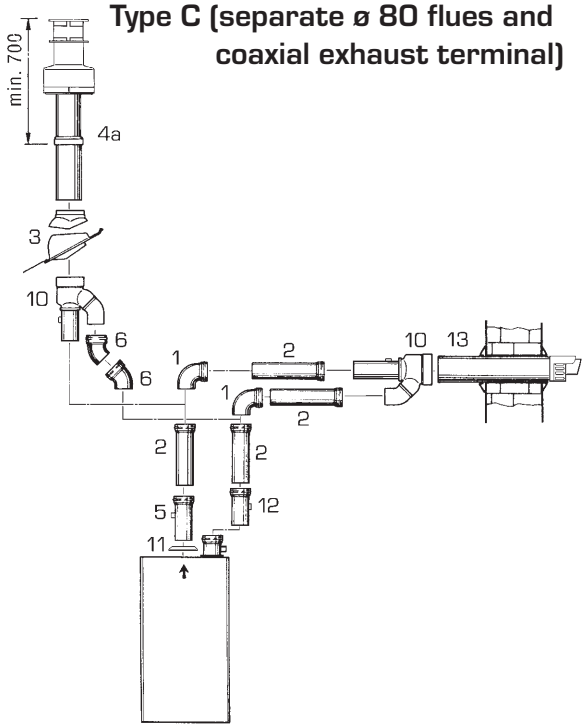

WARNING:

- **Installations with roof exit terminal (4a) and coaxial exhaust (13) require the use of a condensation recovery (12) that has to be connected to the water drain siphon (waste water).**
- **The installation of the roof exit terminal (4a) requires the removal of the two ø 60 and ø 100 reducers.**
- **Before fitting the accessories, it is always advisable to lubricate the internal section of the gaskets with silicon products and generally avoid the use of oils and greases.**

TABLE OF LOAD LOSSES OF ACCESSORIES

	Load loss (mm H2O)			
	"60 BFR"		**"100 BFR"**	
	Suction	Exhaust	Suction	Exhaust
90° MF polypropylene curve	1.00	1.30	2.00	3.00
45° MF polypropylene curve	0.60	0.70	1.50	2.00
Polypropylene extension, L.1000	0.60	0.60	1.20	1.20
Polypropylene extension L.500	0.30	0.30	0.60	0.60
Coaxial roof exit terminal, L.1285 + Fitting (pos. 10)	-	4.30	-	14.00
Roof exit terminal L.1381	-	1.20	-	4.30
Exhaust terminal	-	1.30	-	3.60
Suction terminal	0.20	-	1.60	-
Polypropylene extension, L. 250 with socket	-	0.15	-	0.30
Coaxial exhaust, L.885 + Fitting (pos. 10)	-	5.20	-	15.00
Condensation recovery, L.135	2.50	-	5.00	-

KEY

1	ø 80 curve, 90° MF (6 pcs) code 8077450
2 a	ø 80 extension, L. 1000 (6 pcs.) code 8077351
2 b	ø 80 extension, L. 500 (6 pcs.) code 8077350
3	Hinged tile, code 8091300
4	Roof exit terminal, L. 1381, code 8091204
4 a	Coaxial roof exit terminal, L. 1285 code 8091205
5	ø 80 extension, L. 250, with socket, code 6296513
6	ø 80 curve, 45° MF (6 pcs.), code 8077451
7	ø 80 exhaust terminal, code 8089501
8	Kit with internal/external ring nuts, code 8091500
10	Suction/exhaust fitting, code 8091401
11	ø 80 rubber gasket (supplied with unit)
12	ø 80 condensation recovery, L. 135, code 8092800
13	ø 80/125 coaxial exhaust, L. 885, code 8091210

Fig. 4/a

Type C (ø 80/125 coaxial exhaust)

KEY

2 a	ø 80/125 extension, L. 1000, code 8096171
2 b	ø 80/125 extension, L. 500, code 8096170
3	Hinged tile, code 8091300
4 a	Coaxial roof exit terminal, L. 1285, code 8091205
10	Suction/exhaust fitting with test outlet, code 8091401
11	ø 80 rubber gasket (supplied with unit)
12	ø 80 condensation recovery, L. 135, code 8092800
13	ø 80/125 coaxial exhaust, L. 885, code 8091210
14 a	90° curve, ø80/125, code 8095870
14 b	45° curve, ø80/125, code 8095970

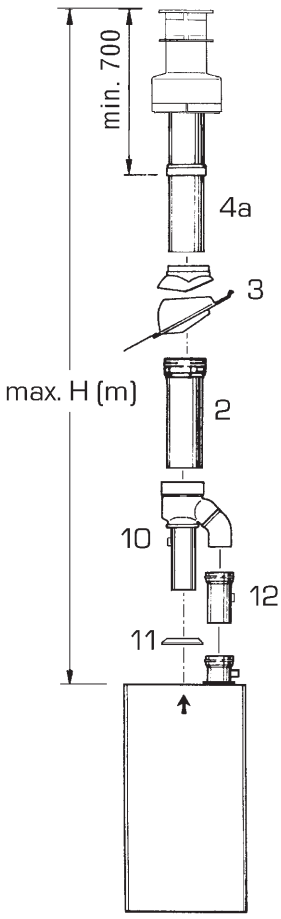

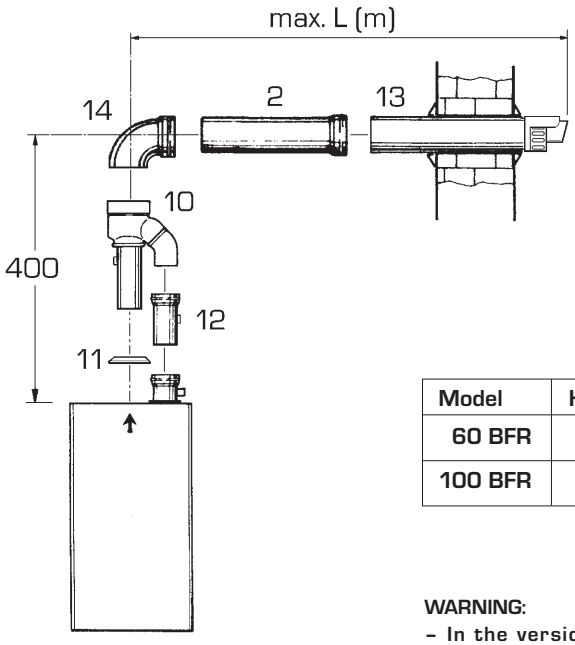

Model	H (m)	L (m)
60 BFR	8	5
100 BFR	3	2

WARNING:
- **In the versions "60 BFR" he insertion of a 90° additional curve reduces the available length by 2 meters end the insertion of a 45° additional curve reduces the available length by 1 meter.**
- **In the versions "100 BFR" inserimenti of additional curves are not admitted.**

NOTES:
- **Installation requires the use of a condensation recovery (12) that must be connected to a water drain siphon (waste water).**
- **The installation of the coaxial roof exit terminal (4a) requires the removal of the two ø60 and ø100 reducers.**
- **Before fitting the accessories, it is always advisable to lubricate the internal section of the gaskets with silicon products and generally avoid the use of oils and greases.**
- **Horizontal terminals must be LEVEL**

Fig. 4/b

and set the "Max. air Δp" values provided in paragraph 4.2 in order to ensure a correct operation.
In the version **"100 BFR"** for all pipe lengths it is necessary to adjust trimmer "MAX" on the fan board and set the "Max. air Δp" values provided in paragraph 4.3 in order to ensure a correct operation.

2.6.5 Positioning the outlet terminals

The outlet terminals for forced-draught appliances may be located in the external perimeter walls of the building.

To provide some indications of possible solutions, **Table 2** gives the minimum distances to be observed, with reference to the type of building shown in fig. 5.

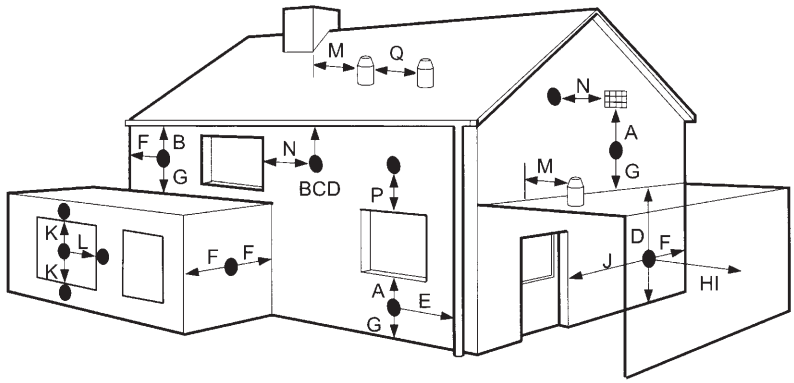

TABLE 2

Terminal position		Minimum spacing	
A	Directly below an openable window, air vent or any other ventilation opening	300 mm	12 in
B	Below guttering, drain pipes or soil pipes	75 mm	3 in
C/D	Below eaves, balconies or carport roof	200 mm	8 in
E	From vertical drain pipes or soil pipes	75 mm	3 in
F	From internal or external corners	300 mm	12 in
G	Above adjacent ground, roof or balcony level	300 mm	12 in
H	From a boundary or surface facing the boiler	600 mm	24 in
I	From a terminal facing the terminal	1,200 mm	48 in
J	From an opening in the carport (eg door, window into dwelling)	1,200 mm	48 in
K	Vertically from a terminal on the same wall	1,500 mm	60 in
L	Horizontally from a terminal on the same wall	300 mm	12 in
M	Horizontally from a vertical terminal to a wall	300 mm	12 in
N	Horizontally from an openable window or other opening	300 mm	12 in
P	Above an openable window or other opening	300 mm	12 in

- If the terminal discharges into a pathway or passageway check that combustion products will not cause nuisance and that the terminal will not obstruct the passageway.
- Where the lowest part of the terminal is fitted less than 2 m (78 in) above ground, above a balcony or above a flat roof to which people have access, the terminal MUST be protected by a purpose designed guard. Terminal guards are available from Quinnell, Barrett, and Quinnell, Old Kent Road, London. State model C2, (G.C. Part No 382946).
- Where the terminal is fitted within 850 mm (34 in) of a plastic or painted gutter, or 450 mm (18 in) of painted eaves, an aluminium shield at least 1,500 mm (59 in) long must be fitted to the underside of the painted surface.
- The air inlet/outlet flue duct MUST NOT be closer than 25 mm (1 in) to combustible material.
- In certain weather conditions the terminal may emit a plume of steam. This is normal but positions where this would cause a nuisance should be avoided.

Fig. 5

2.7 ELECTRICAL CONNECTION

The boiler is supplied with an electric cable. Should this require replacement, it must be purchased exclusively from SIME.
The electric power supply to the boiler must be 230V - 50Hz single-phase through a fused main switch, with at least 3 mm spacing between contacts. Respect the L and N polarities and the earth connection.
NOTE: SIME declines all responsibility for injury or damage to persons, animals or property, resulting from the failure to provide for proper earthing of the appliance.

2.7.1 Room stat connection (fig. 8 pos. A)

To gain access to the electronic board connector (3), remove the control panel cover and connect the room stat to the terminals TA after having removed the jumper.
The thermostat or timer-thermostat, recommended for better room temperature control, must be class II as specified by standard EN 60730.1 (clean contact).
WARNING: Applying mains voltage to the terminals of conector (3) will irreparably damage the control board. Make sure that any connections to be made are not carrying mains voltage.

2.7.2 "Logica Remote Control" connection (fig. 8 pos. B)

The electrical plant must comply with local standards and all cables must comply with low safety voltage requirements of EN 60730. For lengths up to 25 m, use cables of section 0.25 mm^2, for longer lengths up to 50 m use cables of section 0.5 mm^2.
First of all, assemble and wire the socket (2), then insert the equipment which will start-up as soon as it receives current.
To gain access to connector (3) remove the control panel cover and connect the climate regulator to terminals CR.
WARNING: External voltage must not be connected to terminals 1-2-3-4 of the "Logica Remote Control". A telephone remote switch with a zero potential contact or a window contact can be connected to terminals 3-4. Equipment for the checking of civil plants via a telephone line includes the model TEL 30.4 LANDIS & STAEFA.

2.7.3 External temperature sensor connection (fig. 8 pos. C)

The cables must comply with low safety voltage requirements of EN 60730.
For lengths up to 25 m, use cables of section 0.25 mm^2, for longer lengths up to 50 m use cables of section 0.5 mm^2.
To gain access to boiler connector (3) remove the control panel cover and connect the external temperature sensor to terminals SE.

KEY
1 Control panel
2 "Logica Remote Control" socket
3 Conector (J2)
TA Room stat (not supplied)
CR Logica Remote Control (optional)
SE External temperature sensor (optional)

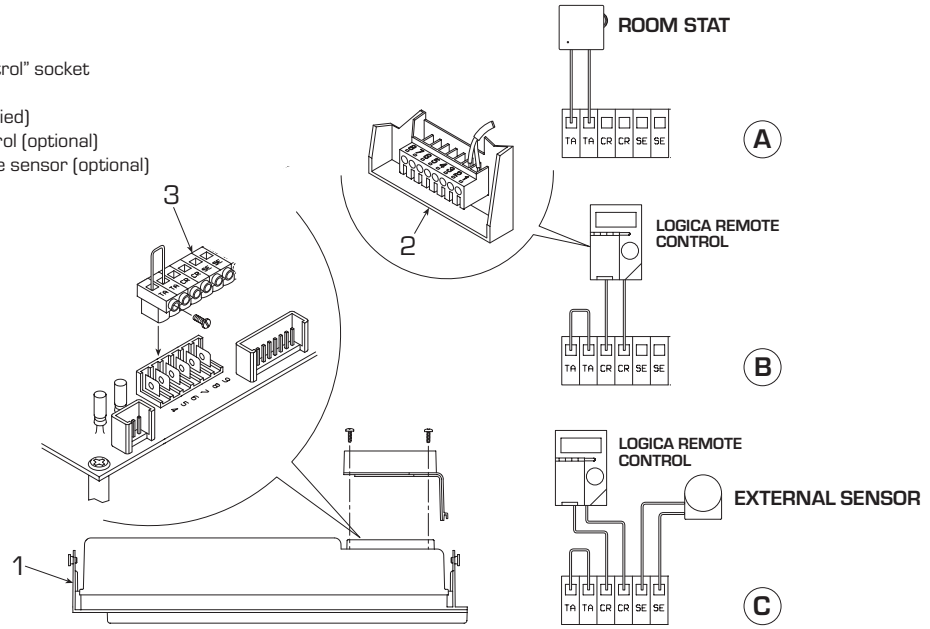

Fig. 8

2.7.4 Wiring diagram "PLANET DEWY 60 BFR"

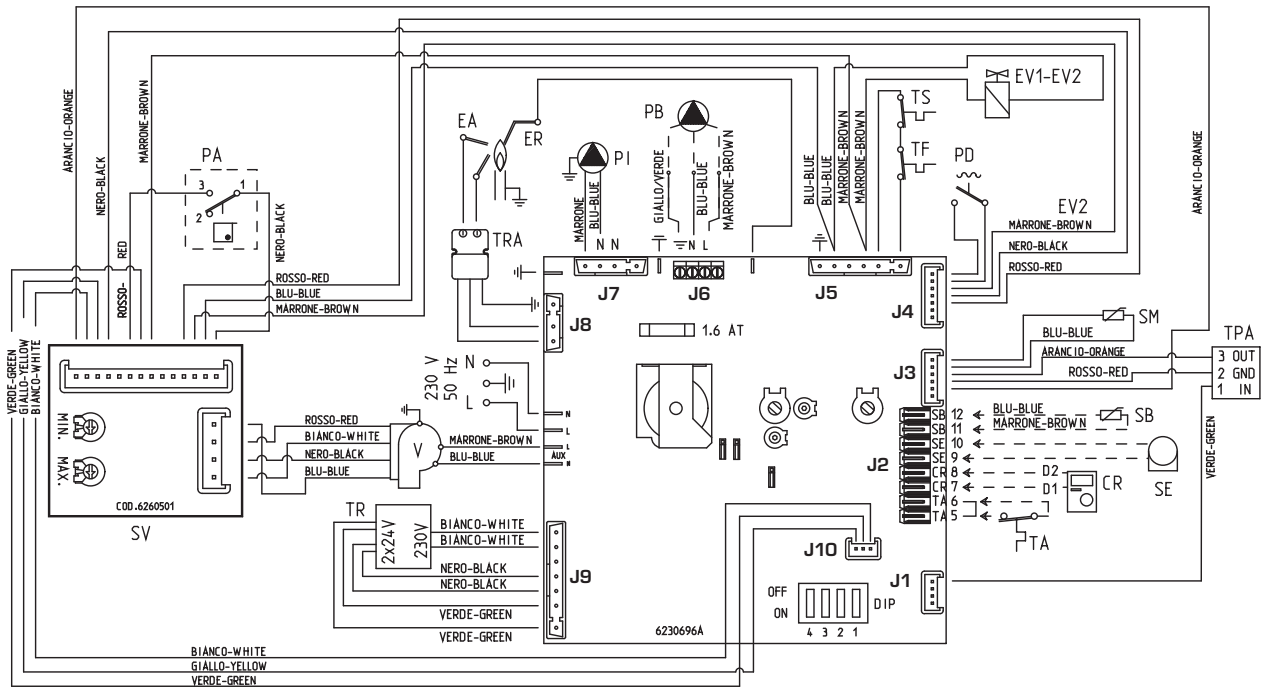

KEY
EV1 Gas valve coil
EV2 Gas valve coil
EA Ignition electrode
ER Detection electrode
TS Safety thermostat 100°C
V Fan
TPA Water pressure transducer
PI System pump
SE External probe (optional)
TA Room thermostat
SM Heating probe
TR 230 - 24V transformer
PD Differential pressure switch
CR Remote Control Logic (optional)
SV Fan board
TF Exhaust thermostat
PA Air pressure switch
SB Boiler probe
PB Boiler pump
TRA Ignition transformer

NOTE: Connect the room thermostat (TA) to terminals 5-6 after removing the bridge. Fan control board (SV) "MAX" and "MIN" trimmers are sealed and must never be tampered with.

CONNECTOR SPARE PART CODES:
J2 cod. 6278613
J3 cod. 6299970
J4 cod. 6293589
J5 cod. 6293586
J7 cod. 6293587

Fig. 9

2.7.5 Wiring diagram "PLANET DEWY 100 BFR"

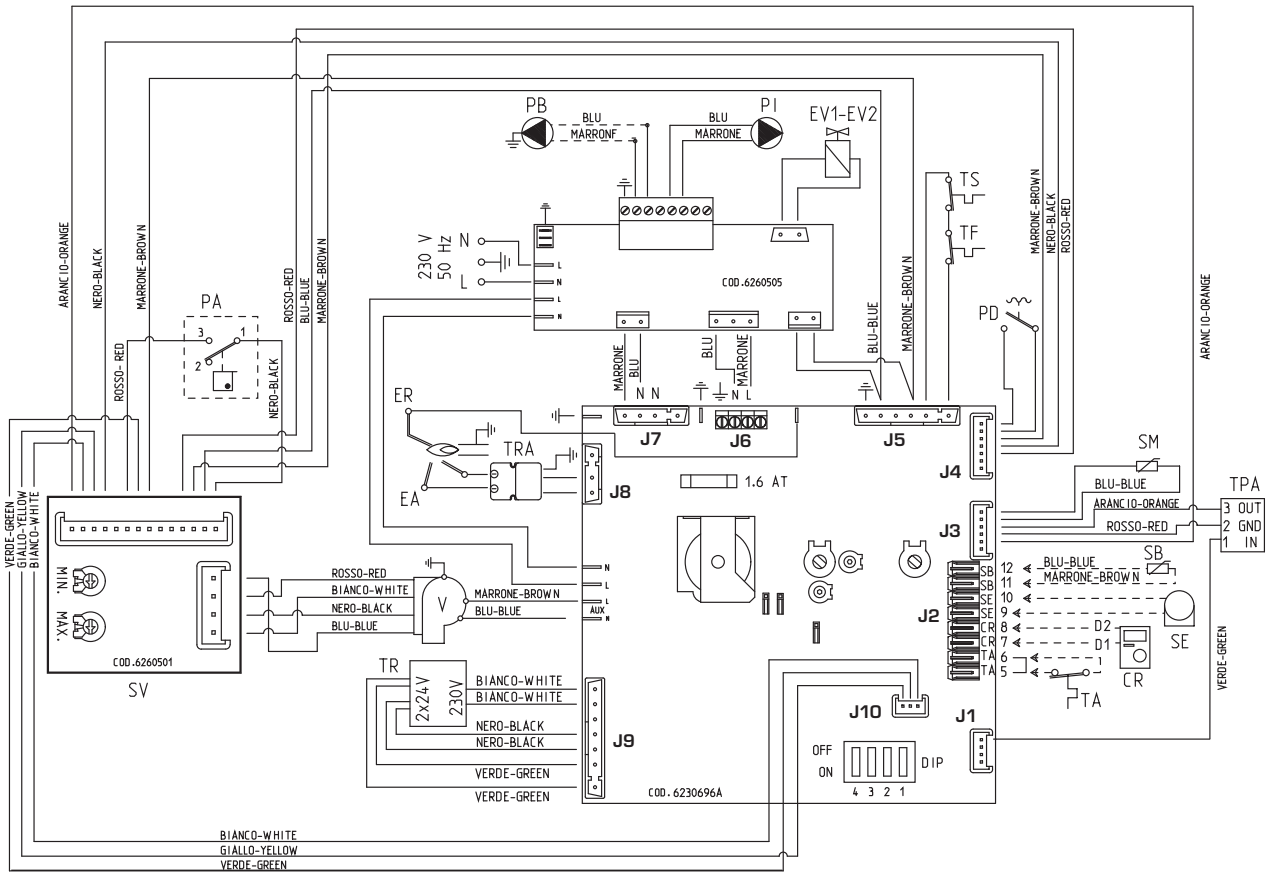

KEY

EV1	Gas valve coil
EV2	Gas valve coil
EA	Ignition electrode
ER	Detection electrode
TS	Safety thermostat 100°C
V	Fan
TPA	Water pressure transducer
PI	System pump
SE	External probe (optional)
TA	Room thermostat
SM	Heating probe
TR	230 - 24V transformer
PD	Differential pressure switch
CR	Remote Control Logic (optional)
SV	Fan board
TF	Exhaust thermostat
PA	Air pressure switch
SB	Boiler probe
PB	Boiler pump
TRA	Ignition transformer

NOTE: Connect the room thermostat (TA) to terminals 5-6 after removing the bridge. Fan control board (SV) "MAX" and "MIN" trimmers are sealed and must never be tampered with.

CONNECTOR SPARE PART CODES:

J2 cod. 6278613
J3 cod. 6316242
J4 cod. 6293589
J5 cod. 6316241
J7 cod. 6316241

Fig. 9/a

2.7.6 The electric connection between the boiler and heater is downstream from the hydraulic separator

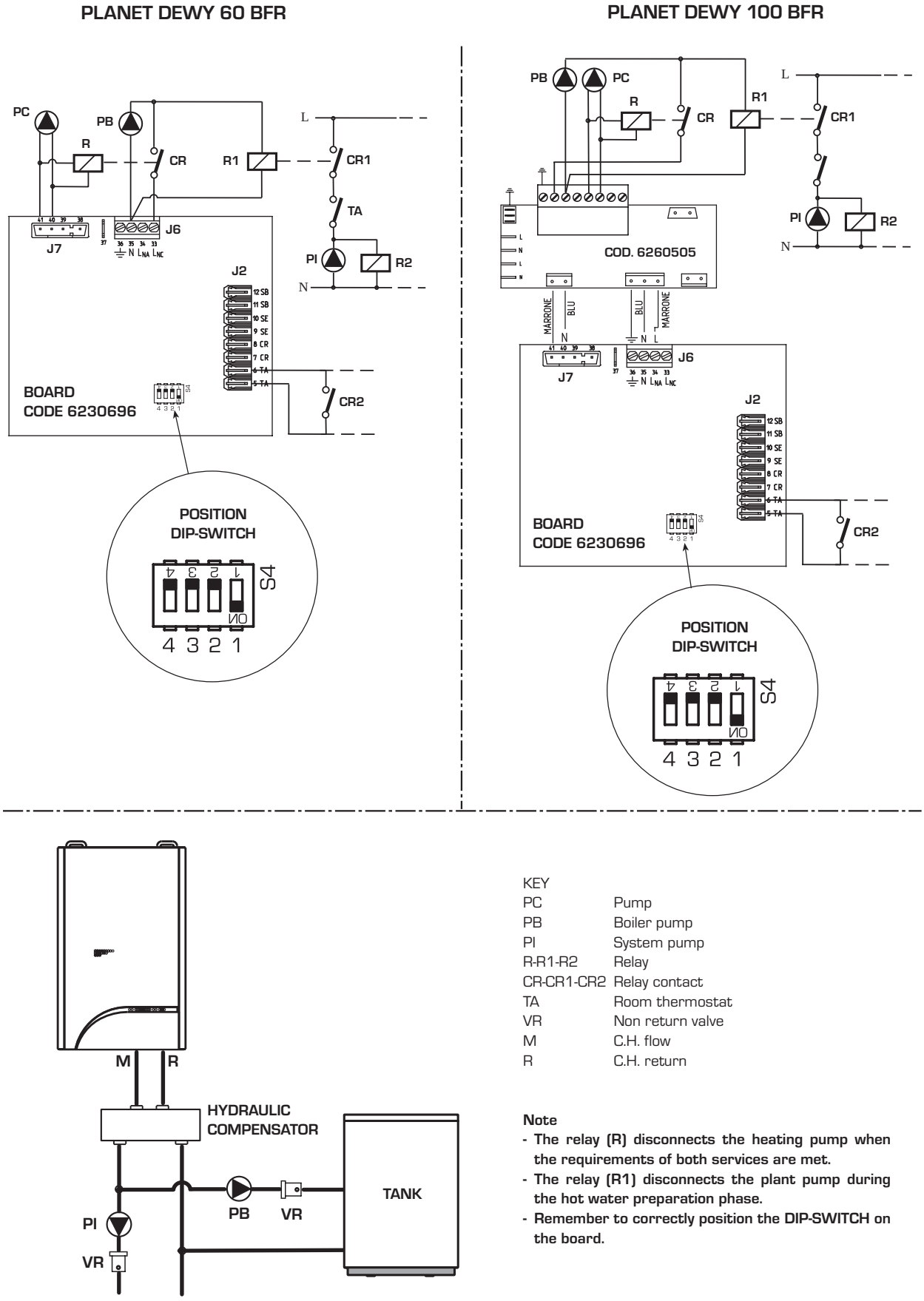

KEY

PC	Pump
PB	Boiler pump
PI	System pump
R-R1-R2	Relay
CR-CR1-CR2	Relay contact
TA	Room thermostat
VR	Non return valve
M	C.H. flow
R	C.H. return

Note

- **The relay (R) disconnects the heating pump when the requirements of both services are met.**
- **The relay (R1) disconnects the plant pump during the hot water preparation phase.**
- **Remember to correctly position the DIP-SWITCH on the board.**

Fig. 10

2.8 LOGICA REMOTE CONTROL USED WITH SINGLE BOILERS.

All the boiler's functions can be managed by a optional digital multifunctional device code 8092204 for the remote of the boiler itself and for regulating room climatic conditions with an operational reserve of 12 hours.
The heating circuit is controlled by the room temperature sensor built-in the equipment or by the atmospheric conditions, with or without environmental inflow, if the boiler is connected to an external sensor.

Characteristics:
- Ergonomic control unit divided according to function (control levels)).
- Clear division of basic functions:
  - operating regime, correction of set value and presence button are directly accessible;
  - Different real current values are accessible through the "info" button;
  - other functions can be programmed after the cover has been opened;
  - special service level with protected access;
- Each setting or modification is displayed and confirmed.
- Tome setting (special line for changing BST/CET).
- Heating programme with max. 3 heating periods per day, individually selectable.
- Copy function for easy transfer of heating programme to the next or previous day.
- Holiday programme: the programme is interrupted for the holiday period and automatically restarted on returning home.
- Option to return the heating program to default values.
- Programming lock (child safety).

Functions:
- Delivery temperature control guided by the atmospheric conditions, taking into account the dynamics of the building.
- Delivery temperature control guided by atmospheric conditions with influence of ambient temperature.
- Ambient temperature control only.
- Adjustable influence of ambient temperature shift .
- Switch-on and switch-off optimisation.
- Rapid lowering.
- ECO functions (daily heating limiter, automatic summer/winter switch-over).
- Controllable maximum delivery temperature limit (specifically for floor plants).
- Limitation of increase in pre-set delivery temperature.
- Anti-freeze protection for buildings.
- Hourly programming of the tank unit temperature on two levels: comfort and reduced.
- Domestic hot water control with nominal value requirement and enable.
- Connection to room sensor or switching of operating regime through the telephone system with external contact or through a window contact.
- Anti-bacterial.

2.8.1 Installation

The unit must be installed in the main living room. For installation, follow the assembly instructions inserted in the package. At this point, with the selector knob on (), the installer can adjust the basic parameters settings according to the individual needs (point 2.8.2).

The radiators in the room that the Logica is fitted must not have thermostatic valves.

2.8.2 Installation settings

The settings for the basic operating parameters for individual needs are shown in the instruction leaflet supplied with the "Logica Remote Control" and in the section reserved for the user in this manual.
For further adjustments which can be carried out by the installer, the "Logica Remote Control" offers a level of service and parameterising which can only be accessed through a special combination of buttons.
To activate this level of service or parameterising press buttons ▲ and ▼ least 5 seconds.
This will activate the parameterising level. Then use the same arrow buttons to select the individual input lines and adjust the values with − or + .

HEATING CIRCUIT SETTINGS

Antifreeze protection "Pre-set ambient temperature value"	51	Heating takes place up to this pre-set value if the plant is activated in standby (e.g. holidays). In this way, the building antifreeze function is active, preventing an excessive lowering of the ambient.
Summer/Winter switch-over temperature	52	This parameter regulates the temperature of the automatic summer/winter switch-over.
Type of control: 0 = with ambient influence 1 = without ambient influence	53	This parameter de-activates the ambient influence and as a result all the optimisations and adaptations. If a valid external temperature is not transmitted , the controller switches to the pure ambient control guide variable.
Influence of ambient temperature	54	If the ambient controller is used only as a remote control (placed in the reference room and without an external sensor connected), the value must be set at 0 (zero). If the change in ambient temperature from the pre-set value remains high during the entire day, the influence must be increased. If the ambient temperature is around the pre-set value (control oscillation), the influence must be reduced. **Note: If the ambient temperature influence constant is set at 0, the adaptation of the heating curve is deactivated. In this case, parameter 57 will have no effect at all.**

Maximum limit of delivery temperature	55	The delivery temperature is limited to the maximum set value.
Variation of the maximum speed of the delivery temperature	56	The increase per minute of the prescribed delivery temperature value sent in °C is limited to the imposed value.
Activation of adaptation	57	With the activation of the adaptation, the pre-set value transmitted to the boiler regulator is adapted to the effective heat need. The adaptation functions with both the atmospheric guide with ambient influence and with pure ambient control. If the "Logica Remote Control" is set as a remote control only, the adaptation must be is deactivated.
Optimisation of switch-on time	58	If the switch-on time optimisation is active, the "Logica Remote Control" modifies the heating gradient until it finds the optimum heating point **0 = off** **1 = on**
Heating gradient	59	The "Logica Remote Control" selects the switch-on time such that the set value has more or less been reached at the start of the usage time. The more severe the night-time cooling, the earlier the heating time starts. Example: Current ambient temperature 18.5°C Nominal ambient temperature 20°C Heating gradient 30 min/K Presetting of switch-on time: 1.5 K x 30 min/K = 45 minutes 00 means that the switch-o time has not been pre-set (function disabled).
Presetting switch-off time (00 = off)	60	If the switch-off time optimisation is active (value > 0), the "Logica Remote Control" modifies the pre-set time until it finds the optimum switch-off time..

DOMESTIC HOT WATER SETTINGS

Reduced domestic hot water pre-set value	61	The reduced pre-set value of the temperature of the domestic hot water allow the required water temperature to be obtained outside the programmed usage times (daily programme 8).
Domestic hot water load	62	**0** = 24 hours/ day - Hot water is always available at the temperature set with user parameter n°3. **1** = standard - Hot water according to the daily heating programme. In the comfort areas of heating the temperature of the boiler unit is regulated to the value set with user parameter n° 3. In the reduced areas of heating the temperature of the boiler unit is regulated to the value set with parameter n° 61 of the service level. **2** = service disconnected **3** = second daily programme (8) - Every day of the week the temperature of the hot water is set according to programme 8. In this case there is a single programming for all the days of the week and three time zones are available. In the time spans set the temperature of the boiler unit is regulated according to that set in parameter n°3. In the remaining hours the boiler unit is controlled to the temperature set with parameter n° 61 the of service level.

SERVICE VALUES

Final user level 2 programming block	63	This block (1) can be activated to display all the parameters without modifying them. Pressing buttons [−] or [+] displays **"OFF"**. **WARNING:** The activation block can be deactivated temporarily by pressing buttons [▲] and [+] simultaneously; a confirmation sign appears on the display. At this point press simultaneously the buttons [▲] and [▼] for at least 5 seconds. To permanently remove the activation block, set parameter 63 on 0.

Input function terminal 3-4	64	The freely programmable input (terminals 3-4) allows three different functions to be activated. The parameter has the following significance: **1** = If an external sensor is connected, the display will show the temperature of the external sensor (_ _ = no sensor connected, function disabled). **2** = With an external contact, it is possible to switch-over to "reduced pre-set value of the ambient temperature". **3** = With an external contact, it is possible to switch-over to "reduced pre-set value of the antifreeze ambient temperature" (short circuit 0 0 0 or interruption _ _ _). The display shows the current status of the external contact.
Operating mode of external contact	65	If the entrance (terminals 3 and 4 of the base) is connected to a zero potential external contact (parameter 64 = 2 or 3), the operating mode of the contact can be determined (remote telephone switch or window contact). The operating mode specifies the status of the contact in which the required function is active. Display: Operating mode closed (short circuit) 0 0 0 Operating mode open (interruption) _ _ _
External and ambient sensor influence	66	Determines the mix ratio between the internal and external ambient sensor when parameter 64 = 1. **0 %** = internal sensor only active (0% external - 100% internal) **50 %** = mean value of external + internal sensor **100 %** = external sensor only active The set mix is used for ambient control and display. If the external sensor is short circuited or interrupted, the operation continues with the internal sensor.
Anti-bacterial function (with storage capacity boiler unit)	69	This function allows the hot water to be brought to a high temperature once a week in order to eliminate eventual pathogenic agents. It is active every Monday for a maximum duration of 2.5 hours at a delivery temperature of 65°C. **0 = not active** **1 = active**

2.8.3 Gradient of the characteristic heating curve

The gradient of the characteristic heating curve is imposed on the current value **"15"** of Logica.
Increasing the gradient as shown in the drawing of fig. 11, the delivery temperature increases in correspondence to the outside temperature.

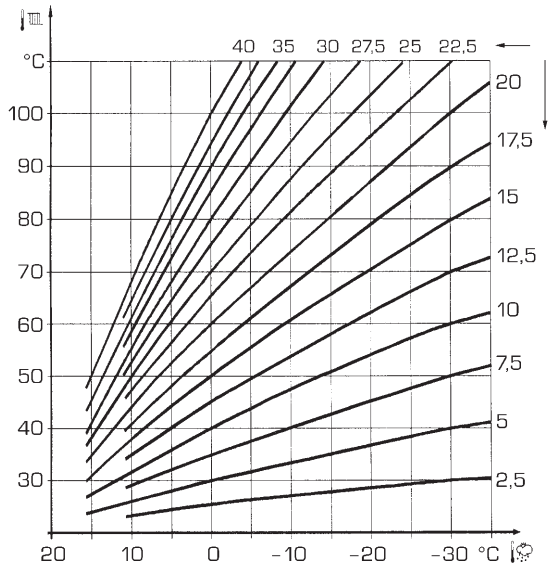

Example: Choosing a gradient of 15 with an outside temperature of –10°C we shall have a delivery temperature of 60°C.

Fig. 11

2.9 EXTERNAL TEMPERATURE SENSOR

The "Logica Remote Control" can be connected to an external temperature sensor available a an optional extra (code 8094100).
This configuration ensures and maintains the required temperature constant in the room.
The ambient temperature is, in fact, indicted and evaluated as the calculated mean of the value measured inside and outside the dwelling. For installation, follow the assembly instructions inserted in the package.

3 CHARACTERISTICS

3.1 ELECTRONIC BOARD

Built according to Low Voltage directive 2006/95/CEE and powered at 230 Volt, via a transformer it sends 24 Volt power to the following components: gas valve, safety thermostat, heating probe, external temperature probe (optional), water pressure transducer, air pressure switch, room thermostat or "Remote Control Logic". An automatic and continual modulation system permits the boiler to adjust power to the various system or user needs. Electronic components are guaranteed to operate in a temperature range from 0 to +60°C.

3.1.1 Malfunctions

Boiler malfunctions or failures can be indicated by a flashing temperature LED as shown in fig 12.

3.1.2 Devices

The electronic board is equipped with the following devices:

- **"HEATING POWER" TRIMMER** (10 fig. 13)
  Adjusts maximum heating power. To increase the value, rotate the trimmer clockwise, to reduce it, rotate the trimmer counter-clockwise.

- **"IGNITION POWER" TRIMMER** (6 fig. 13)
  Trimmer to vary the gas valve ignition pressure level (STEP). According to the type of gas the boiler is designed for, the trimmer must be adjusted to achieve a burner pressure of approximately 6.5 mm H_2O for methane gas and 9.5 mm H_2O for propane gas (G31). To increase pressure, rotate the trimmer clockwise, to reduce it, rotate the trimmer counter-clockwise. The slow ignition pressure level can be set during the first five seconds after the burner is lit.
  After setting the ignition pressure level (STEP) according to the type of gas, make sure that the heating gas pressure is still the previously set value.

- **"ANN. RIT." CONNECTOR** (5 fig. 13)
  The electronic board is programmed, during heating, with a technical burner delay of about 90 seconds that is performed both at cold start and subsequent ignitions. This is to prevent rapid ignitions and shutdowns that could, in particular, occur in systems with high load losses. Each time the boiler restarts, after the slow ignition, for about 1 minute it will run at minimum modulation pressure before moving to the set heating pressure.
  The addition of a bridge will cancel both the programmed technical delay and the minimum pressure operating period at ignition.
  In this case, the time between shutdown and the next ignition will depend on a 5°C differential detected by the heating probe (SM).

- **DIP SWITCH** (13 fig. 13)
  For correct module operations, the dip switches must be positioned as indicated below:

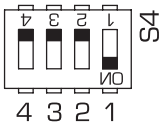

- **"Modureg Sel." connector** (14 fig. 13)
  The bridge must always be **connected**.

- **"Albatros" connector** (15 fig. 13)
  The bridge must always be off. It is only engaged in sequence/cascade installations with several boilers.

WARNING: All the above operations must be performed by authorised personnel, otherwise the warranty shall be invalidated.

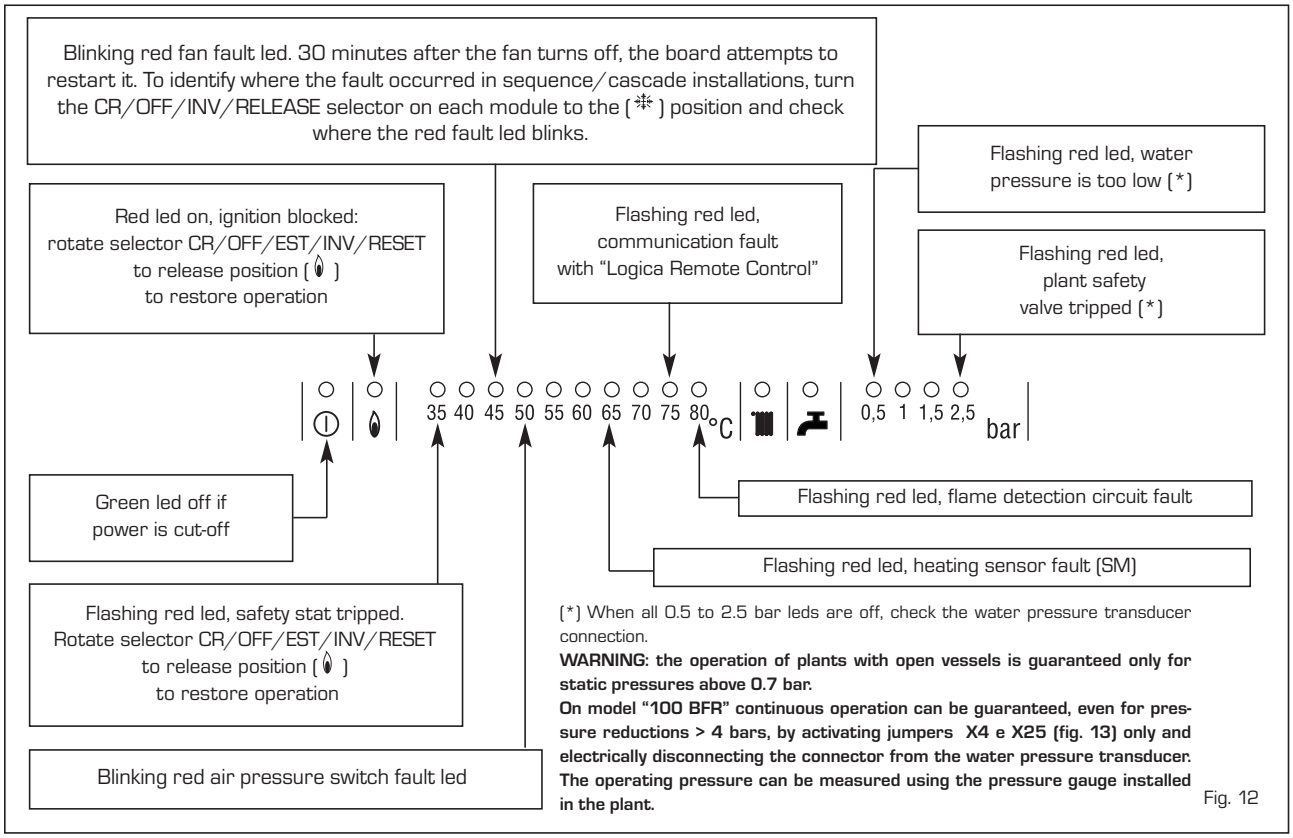

(*) When all 0.5 to 2.5 bar leds are off, check the water pressure transducer connection.
WARNING: the operation of plants with open vessels is guaranteed only for static pressures above 0.7 bar.
On model "100 BFR" continuous operation can be guaranteed, even for pressure reductions > 4 bars, by activating jumpers X4 e X25 (fig. 13) only and electrically disconnecting the connector from the water pressure transducer. The operating pressure can be measured using the pressure gauge installed in the plant.

Fig. 12

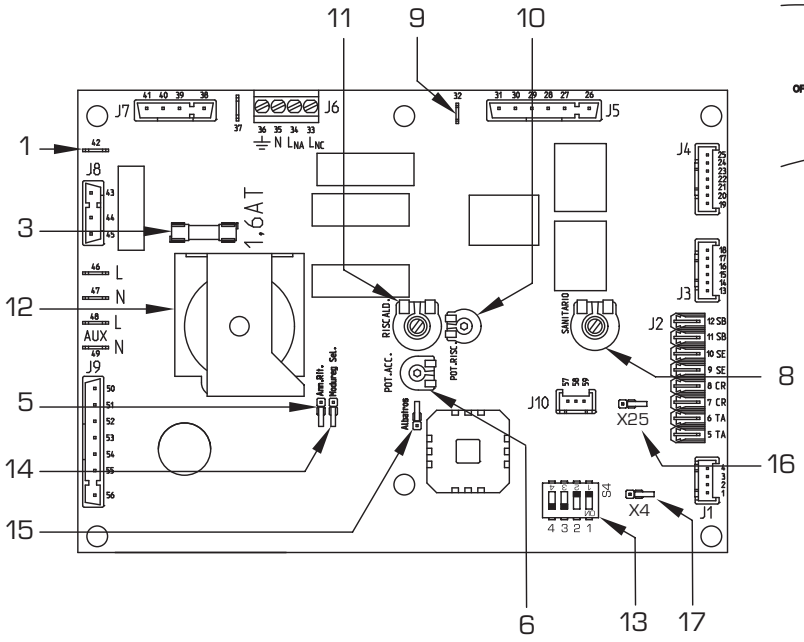

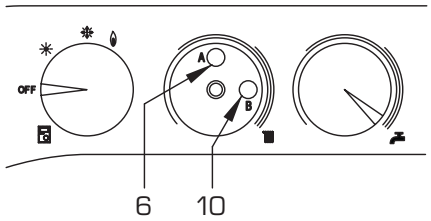

KEY
1 Ignition electrode earth faston
3 Fuse (1,6 AT)
5 "ANN. RIT." connector
6 "POT. ACC." trimmer
8 D.H.W. potentiometer
9 Detector electrode faston
10 "POT. RISC." trimmer
11 C.H. potentiometer
12 Selector CR/OFF/EST/INV/RESET
13 DIP SWITCH
14 Connector "Modureg Sel."
15 Connector "Albatros"
16 Connector X25
17 Connector X4

NOTE: To gain access to trimmers (6) and (10), unscrew the central heating potentiometer knob.

Fig. 13

3.2 TEMPERATURE PROBE AND WATER PRESSURE TRANSDUCER

Antifreeze system made up of the NTC heating sensor that activates when the water temperature reaches 6°C.
Tables 1 - 1/a include the resistance values (Ω) that are obtained on the probe (SM) when the temperature changes and those on the transducer when pressure changes.
The boiler will not work if the heating probe (SM) is open circuit or disconnected.

TABLE 1 (Sensors)

Temperature (°C)	Resistance (Ω)
20	12.090
30	8.313
40	5.828
50	4.161
60	3.021
70	2.229
80	1.669

TABLE 1/a (Transducer)

Pressure (bar)	Resistance (Ω)	
	mín	máx
0	297	320
0,5	260	269
1	222	228
1,5	195	200
2	167	173
2,5	137	143
3	108	113
3,5	90	94

3.3 ELECTRONIC IGNITION

Ignition and flame detection is controlled by two electrodes located on the burner. These guarantee maximum safety with intervention times, for accidental switching off or gas failure, of within one second.

3.3.1 Operating cycle

Rotate the selector to summer or winter and check the green led (⏻) to make sure power is on. The burner should ignite within max. 10 seconds. An ignition failure will cause the "Ignition Blocked" indicator (fig 12) to illuminate, This may be due to the following:

- **Ignition electrode does not spark**
  Gas is being supplied to the boiler and, after 10 sec., the block led turns on.
  This may be due a faulty or disconnected spark generator, faulty or disconnected ignition electrode.

- **No flame detection**
  At ignition, the electrode continues to spark even though the burner is on. After 10 sec. it stops sparking, the burner turns off and the block led turns on.
  This may be due to a faulty, disconnected or damaged ionisation electrode, wrong polarity(live and neutral reversed).

The boiler should resume automatically after a power failure.

3.4 AIR PRESSURE SWITCH

The air pressure switch is not adjustable. Its value is shown on the air pressure switch.

3.5 SYSTEM AVAILABLE HEAD

The residual prevalence of the boiler supply and return lines varies according to capacity, as shown in the diagram of fig. 14.

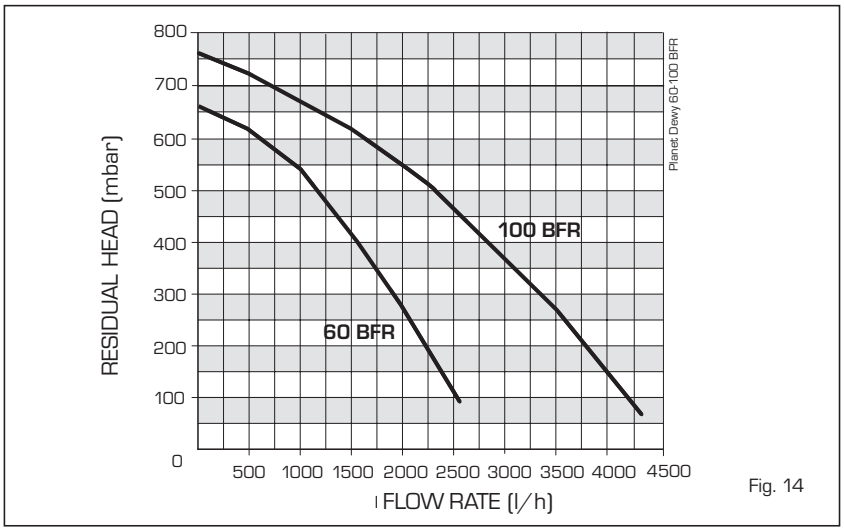

Fig. 14

3.6 MAINS ELECTRICITY CONNECTION

Use a separate electrical line where the room thermostats with relevant area pumps must be connected.
Switch or relay contacts must be connected to the electronic board connector (J2) after removing the link (fig. 15).

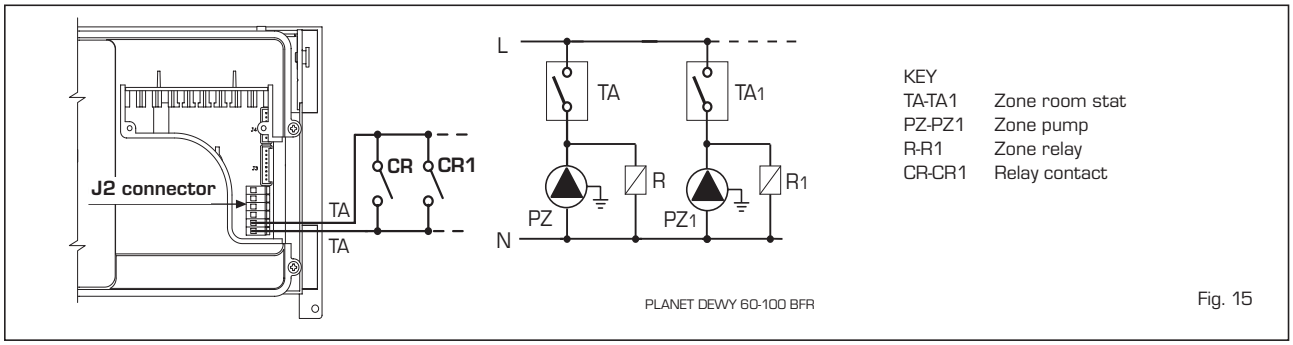

Fig. 15

3.7 "PLANET DEWY 60 BFR" WITH KIT (CODE 8101520) AND "BT" BOILER (optional)

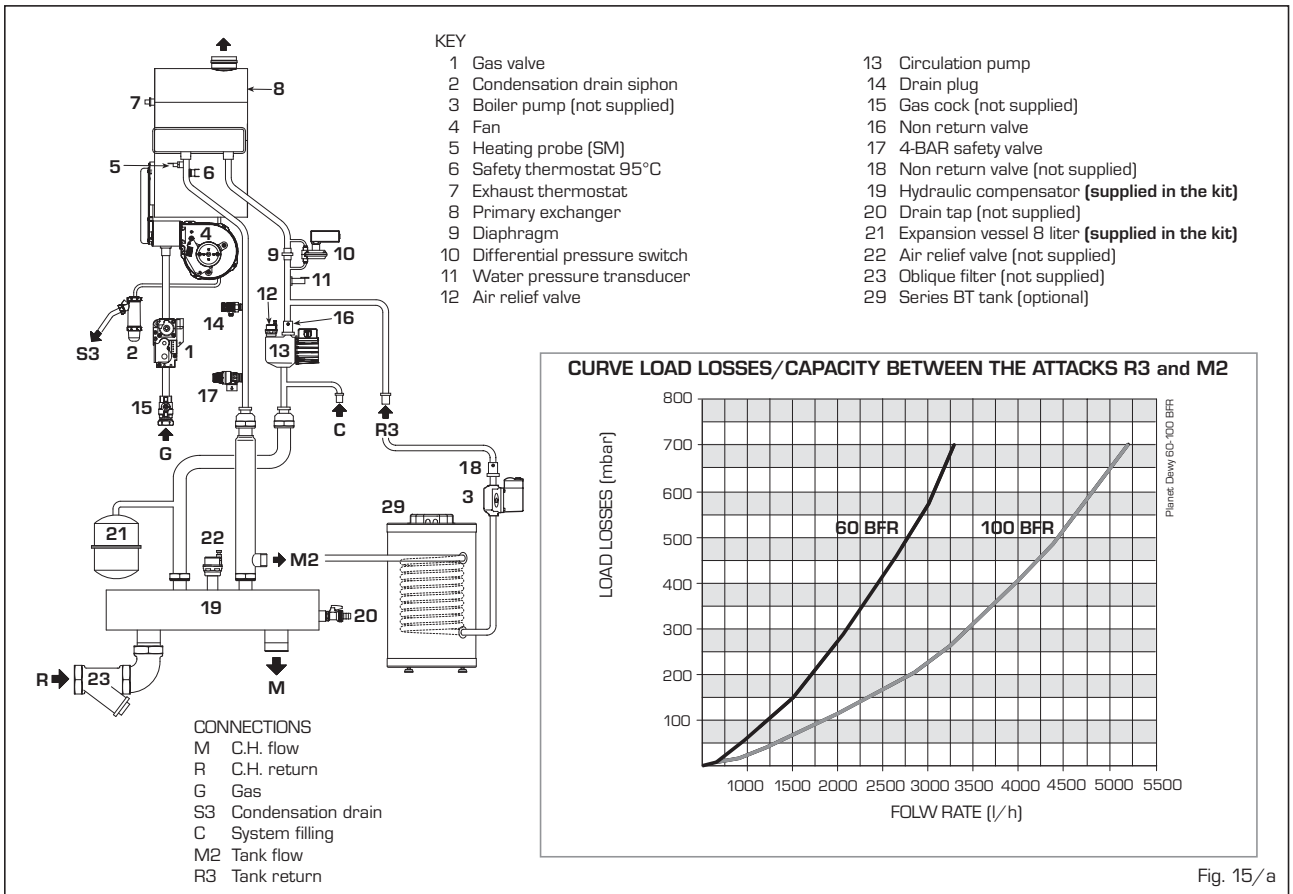

Fig. 15/a

3.8 "PLANET DEWY 100 BFR" WITH KIT (CODE 8101523) AND "BT" BOILER (optional)

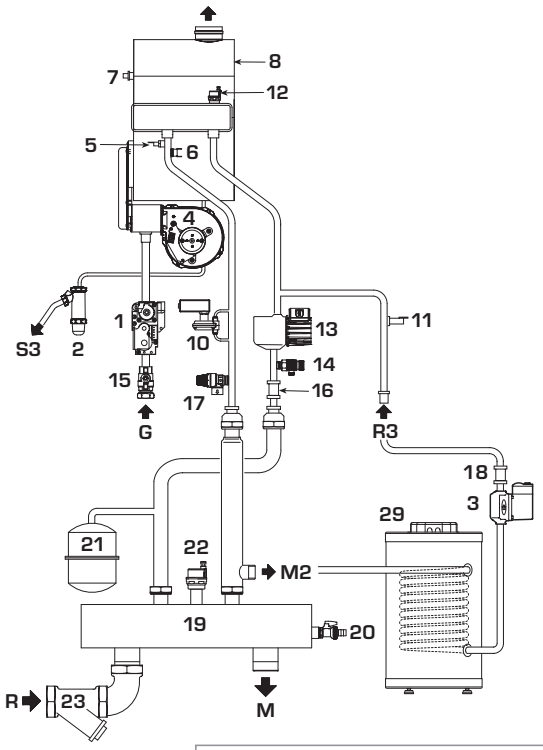

KEY
1 Gas valve
2 Condensation drain siphon
3 Boiler pump (not supplied)
4 Fan
5 Heating probe (SM)
6 Safety thermostat 95°C
7 Exhaust thermostat
8 Primary exchanger
10 Differential pressure switch
11 Water pressure transducer
12 Air relief valve
13 Circulation pump
14 Drain plug
15 Gas cock (not supplied)
16 Non return valve
17 4-BAR safety valve
18 Non return valve (not supplied)
19 Hydraulic compensator **(supplied in the kit)**
20 Drain tap (not supplied)
21 Expansion vessel 8 liter **(supplied in the kit)**
22 Air relief valve (not supplied)
23 Oblique filter (not supplied)
29 Series BT tank (optional)

CONNECTIONS
M C.H. flow
R C.H. return
G Gas
S3 Condensation drain
C System filling
M2 Tank flow
R3 Tank return

CURVE LOAD LOSSES/CAPACITY BETWEEN THE ATTACKS R3 and M2

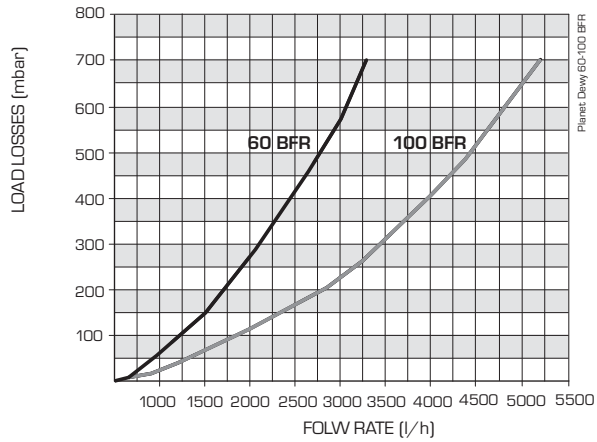

Fig. 15/b

4 USE AND MAINTENANCE

4.1 GAS VALVE

The boiler **"60 BFR"** is equipped standard with the SIT 848 SIGMA gas valve. The boiler **"100 BFR"** is equipped standard with the DUNGS GB-GD 057 gas valve (fig. 16).

SIT 848 SIGMA **DUNGS GB-GD 057**

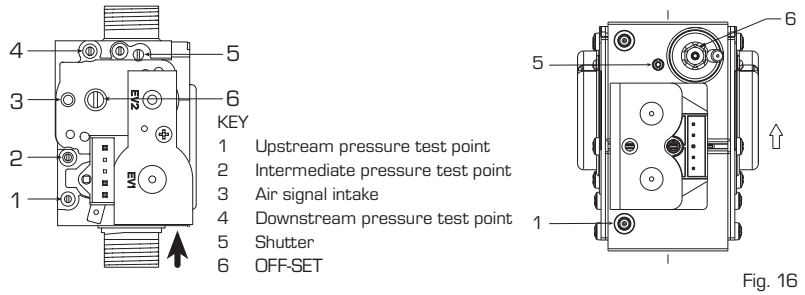

KEY
1 Upstream pressure test point
2 Intermediate pressure test point
3 Air signal intake
4 Downstream pressure test point
5 Shutter
6 OFF-SET

Fig. 16

4.2 BOILER CALIBRATION

GAS CONVERSION

- Close the gas cock.
- Replace the injector (pos. 30) and the relevant gasket (pos. 45).
- Cut the specified resistance on the fan control board.
- Test for soundness all the gas connections using soapy water or appropriate products.
  DO NOT USE NAKED FLAMES.
- Stick onto the casing panel the plate showing the relevant feeding gas.
- Proceed with air and gas calibration as described below.

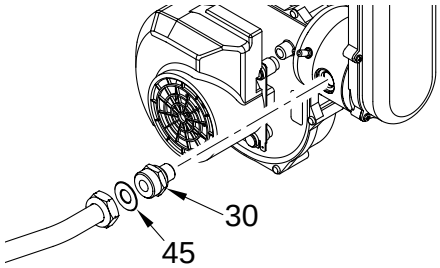

Single modules are calibrated in heating position.

"Δp air" ADJUSTMENT

To measure "Δp air" simply connect the differential pressure gauge, equipped with a decimal scale in mm H_2O or Pascal, to the positive and negative sockets on the air pressure switch *(Drawing 1)*.

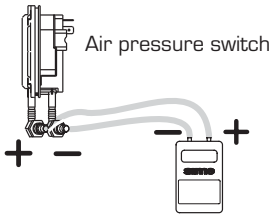

Drawing 1

Operating sequence:

1) Rotate the module heating power adjustment trimmer clockwise to the limit *(B – Drawing 2)*, fan on maximum.

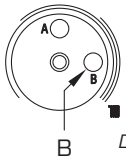

Drawing 2

2) Find the "max Δp air" values in the table, using the fan board "MAX" trimmer *(Drawing 3)*.

Max. Δp air (mm H_2O)

Single module	60 kW	100 kW
G20	60.0 ±2	65.0 ±2
G31	63.0 ±2	70.0 ±2

3) Rotate the module heating power adjustment trimmer counter-clockwise to the limit *(B – Drawing 2)*, fan on minimum.

4) Find the "min Δp air" values in the table, using the fan board "MIN" trimmer *(Drawing 3)*.

Min. Δp air (mm H_2O)

Single module	60 kW	100 kW
G20	5.8 ±0,2	6.5 ±0,2
G31	10.9 ±0,2	7.0 ±0,2

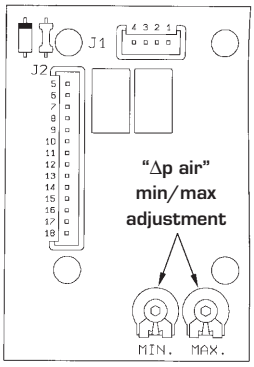

Drawing 3

"Δp air-gas" ADJUSTMENT

To measure "Δp air-gas" simply connect the positive socket on the differential pressure gauge to the downstream pressure fixture and the negative socket to the air pressure switch *(Drawing 4)*.
Gas pressure is always adjusted with the fan on minimum.

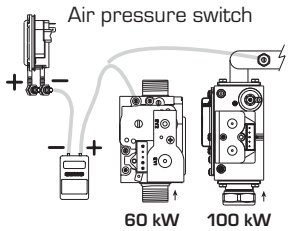

Drawing 4

Operating sequence:

1) Rotate the module heating power adjustment trimmer counter-clockwise to the limit *(B – Drawing 5)*, fan on minimum.

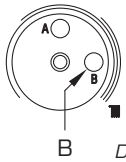

Drawing 5

2) Completely unscrew the valve gas shutter *(1 – Drawing 6)*.

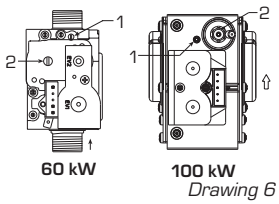

Drawing 6

3) Use the gas valve OFF-SET adjustment screw *(2 – Drawing 6)* and find the "Δp air-gas" value in the table.

Shutter open (mm H_2O)

Single module	60 kW	100 kW
G20	4.2 ±0,1	5.2 ±0,1
G31	9.2 ±0,1	6.5 ±0,1

4) Use the shutter *(1 – Drawing 6)* and find the "Δp air-gas" value in the table:

Adjusted shutter (mm H_2O)

Single module	60 kW	100 kW
G20	3.8 ±0,1	4.3 ±0,1
G31	8.7 ±0,1	4.6 ±0,1

After calibrations, check the CO_2 values with a combustion analyser. If they deviate more than 0.2 from the table values, the following corrections must be made:

	CO_2	
	Methane (G20)	Propane (G31)
"MIN" Power	9.0 ±0,2	10.0 ±0,2
"MAX" Power	9.0 ±0,2	10.0 ±0,2

- To correct CO_2 to the "MIN" power, use the OFF-SET screw *(2 – Drawing 6)*.
- To correct CO_2 to the "MAX" power, use the shutter *(1 – Drawing 6)*.

Fig. 18

4.3 SHELL REMOVAL

For easy boiler maintenance the shell can be completely removed by following these instructions (fig. 19):

- Pull the front panel forward to unhook it from the pegs on the sides.
- Unscrew the two screws that secure the instrument panel to the sides
- Unscrew the four screws that secure the side to the instrument panel support.
- Push the sides upwards sliding them off the frame hooks.

4.4 CLEANING AND MAINTENANCE

During maintenance operations the authorised technician must check that the condensate trap is full of water (this is of particular importance if the boiler has been out of use for some time). Filling is done via the special opening (fig. 20).

4.4.1 Chimney sweep function

To check single module combustion, rotate the selector to position ( ) until the yellow led ( ) starts to blink (fig. 21).
At this time the module will start to heat at maximum power and turn off at 80°C, restarting at 70°C.
Before starting the chimney sweep function, make sure the radiator valves are open.
After checking combustion, turn OFF the module by rotating the selector to (OFF); return the selector to the required function.

ATTENTION: After about 15 minutes the chimney sweep function automatically deactivates.

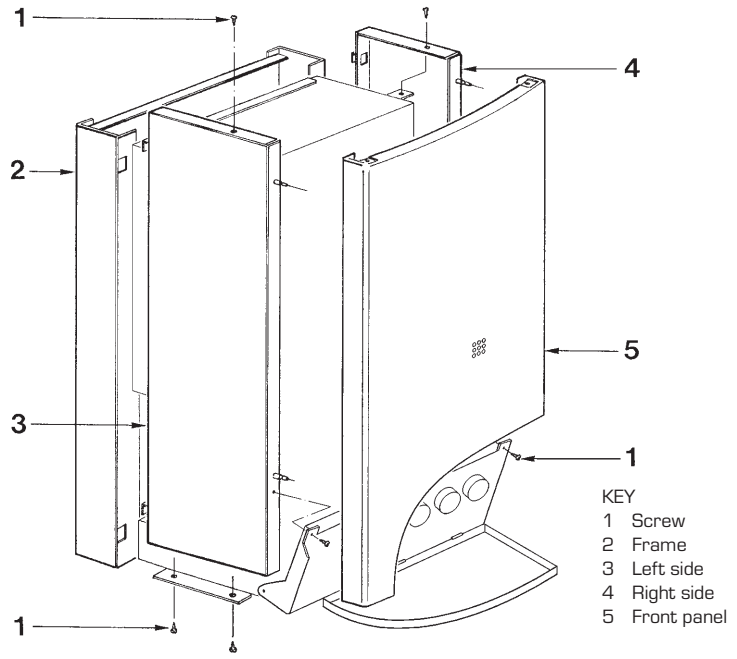

Fig. 19

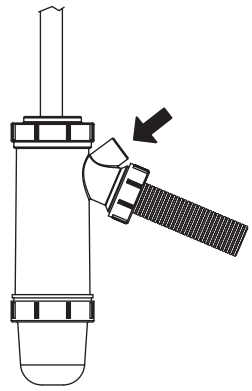

Fig. 20

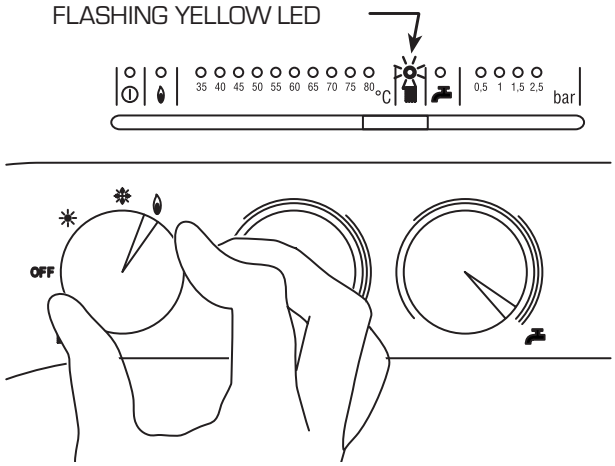

Fig. 21

USER INSTRUCTIONS

IT
ES
FR
BE
GB
RO
RUS

WARNINGS

- *In case of fault and/or incorrect equipment operation, turn the boiler off. Contact an authorised technician.*
- *The installation of the boiler and any servicing or maintenance job must be carried out by qualified personnel. Under no circumstances, the devices sealed by the manufacturer can be tampered with.*
- *Any ventilation or air intake grills to the room where the boiler is installed must be kept open and unobstructed.*

LIGHTING AND OPERATION

BOILER IGNITION (fig. 1)

Open the gas tap, lower the control cover and turn on the boiler by rotating the selector knob to winter ( ).
The green led (ⓘ) turn on to indicate that power is on. The boiler, once the temperature set on the potentiometer is reached, will start automatic operations to provide the system with the required power.

BOILER SHUTDOWN (fig. 1)

To turn OFF the boiler, turn the selector knob to (**OFF**).
For prolonged periods of disuse, disconnect the power supply, close the gas tap and, in the event of low temperatures, empty the boiler and hydraulic system to prevent pipes from bursting due to frozen water.

TEMPERATURE ADJUSTMENT (WITHOUT LOGICA)
(fig. 2)

- Heating temperature is adjusted using the heating knob ( ). The set temperature is indicated on the red led scale from 35 - 80°C and the yellow heating led ( ) turns on simultaneously. If the water return temperature is lower than about 55° C, combustion product condensates further increasing heat exchange efficiency.

GAS CONVERSION

Should it be necessary to convert the appliance to a different gas from the

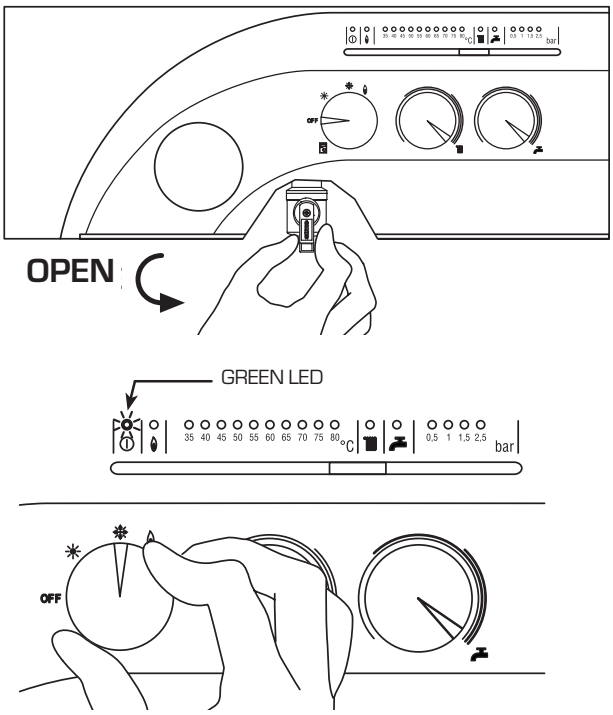

Fig. 1

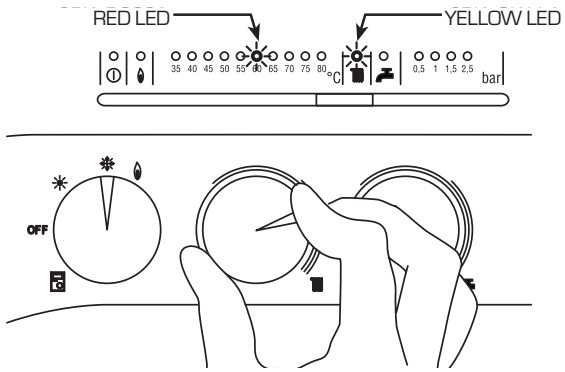

Fig. 2

one for which the boiler has been equipped, approach the technical staff.

CLEANING AND MAINTENANCE

Preventive maintenance and checking of the efficient operation of the equipment and safety devices must be carried out exclusively by the authorized technical staff.
Should any component require replacement, only manufacturers original parts must be used.

MALFUNCTIONS

– **Ignition lock** (fig. 3)
If the burner does not light the red led ( ) turns on.
To attempt ignition again, rotate the selector knob to ( ) and release it immediately after returning it to winter operations ( ).
If the problem persists, contact a authorised engineer .

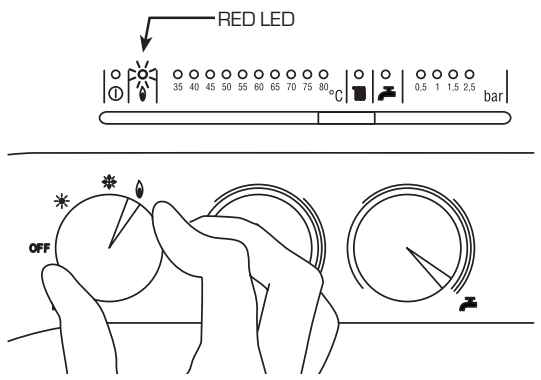

Fig. 3

– **Insufficient water pressure** (fig. 4)
If the **"0.5 bar"** red light blinks, the boiler does not work.
To restore operations, fill the system until the green **"1 bar"** led turns on. If all leds are off, request an authorised engineer.

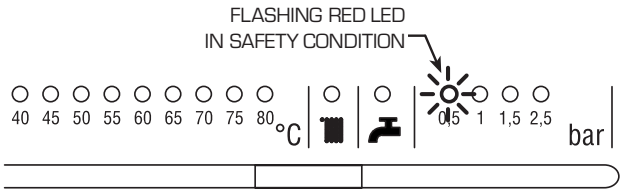

Fig. 4

– **Safety/exhaust thermostat triggered** (fig. 5)
If the safety/exhaust thermostat triggers the red "35°C" led blinks. To attempt ignition again, rotate the selector knob to ( ) and release it immediately after returning it to winter operations ( ).
If the problem persists, contact an authorised engineer.

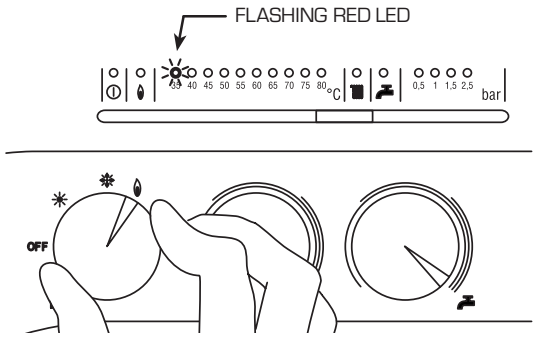

Fig. 5

– **Other faults** (fig. 6)
When one of the red **"40-80°C"** leds blinks, turn off the boiler and attempt ignition again. This operation can be repeated 2-3 times at most, in the event of failure, request an authorised engineer.

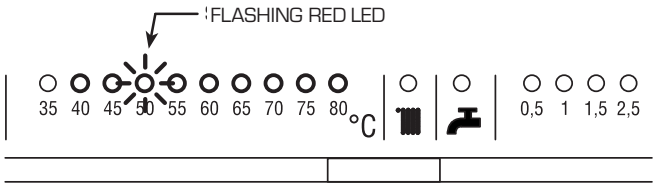

Fig. 6

"PLANET DEWY 60-100 BFR" BOILER INSTALLATION IN SEQUENCE/CASCADE

WHEN THE BOILER IS CONNECTED TO REGULATOR RVA 47.320 IN SEQUENCE/CASCADE INSTALLATIONS, ALL BOILERS IN THE HEATING UNIT MUST HAVE THEIR "CR/OFF/INV/RELEASE" SELECTORS POSITIONED AS INDICATED IN FIG. 7.
THE HEATING POTENTIOMETER AND WATER KNOB NO LONGER HAS ANY CONTROL AND ALL FUNCTIONS WILL BE CONTROLLED BY THE TVA 47.320 REGULATOR.

LOGICA REMOTE CONTROL

When the boiler is connected to the "Logica Remote Control" regulator, the selector CR/OFF/SUM/WIN/UNBLOCK must be placed in the position ( ); the knobs of the hot-water service heating potentiometers do not have any effect and all of the functions will be managed by the regulator (fig. 7). If the "Logica Remote Control" breaks down, the boiler will function by placing the selector on the (o), position, obviously without consequent control of the room temperature.
Inside the cover should be the Operating instructions (Fig. 8). Each programming or modification is displayed and confirmed on the display (fig. 9).

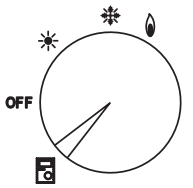

Fig. 7

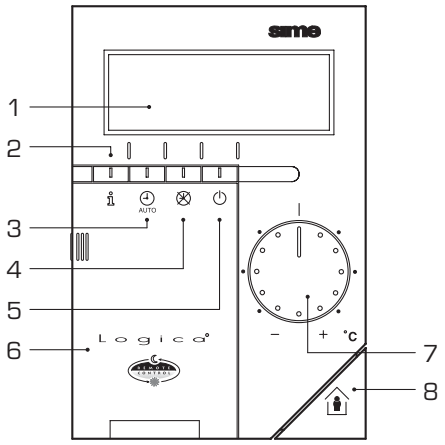

KEY
1 Display
2 Info button
3 Operating mode button: automatic operation
4 Operating mode button: manual operation
5 Operating mode button: availability
6 Cover with instruction compartment
7 Temperature knob
8 Presence button

Fig. 8

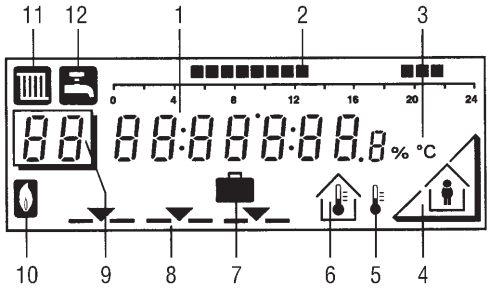

KEY
1 Display, time
2 Heating programme
3 Unit (%/C°)
4 Presence button display
5 External temperature
6 Outside temperature (if sensor fitted)
7 Holiday function
8 Operating mode
9 Line number/day
10 Burner on
11 Heating function
12 Domestic hot water/temperature/D.H.W. load

Fig. 9

ACTIVATING

During functioning the lid of the regulator must be closed.

– **Selection of the operating mode**
(reference keys grey colour)

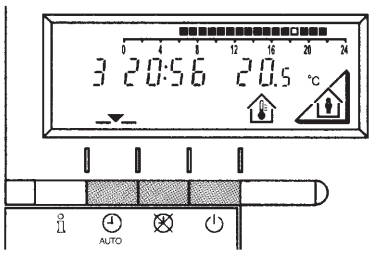

The operating mode desired is selected by pressing the relative key with the corresponding symbol. The choice is displayed with the symbol

Automatic functioning: the heating functions automatically according to the heating programme entered. The programme may be excluded for brief periods with the on-line key.

Manual functioning: the heating functions manually according to the choice made with the on-line key.

Availability: the heating is deactivated.

– **Info key**
(reference key grey colour)

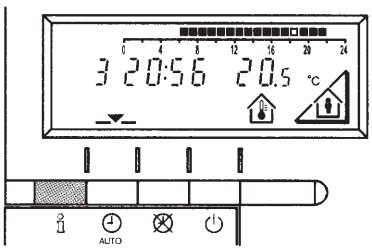

For every operation of the Info key the following list of items, one after the other, are displayed. The thermo-feeler continues to function independently of the display.

Day, hour, room temperature

External temperature*

Hot-water service temperature*

* Only with outside sensor fitted.

– **Adjusting the temperature**

Ensure that the radiators in the room with the Logica do not have thermostatic valves, and are not turned off.

The fixed temperature can be adjusted with the control knob.

If you turn the knob towards the + sign, the fixed temperature is increased by about 1 °C for every notch.

If you turn the knob towards the - sign, the fixed temperature is decreased by about 1 °C for every notch.

Before adjusting it again, however, allow the temperature to stabilise first.

Note: With the temperature knob you can only adjust the fixed temperature, the reduced temperature remains the same.

– **On-line key**

If the rooms remain unused for a long period of time, the temperature can be reduced with the on-line key, in this way saving energy. When the rooms are occupied again, press the on-line key to re-heat them. The current choice is displayed on the display:

Fixed temperature heating

Reduced temperature heating

NOTE: If the control is in the manual mode, If the control is in the automatic mode the control will revert automatically at the next change of the heating programme.

PROGRAMMING

To enter the programming mode the flap on the control must be open.

You can set or display the following values:

- Temperatures 1 up to 3
- Heating programme 4 up to 11
- Day of the week and hour 12 up to 14
- Current values 15 up to 17
- Vacation period 18
- Return to the default values 19

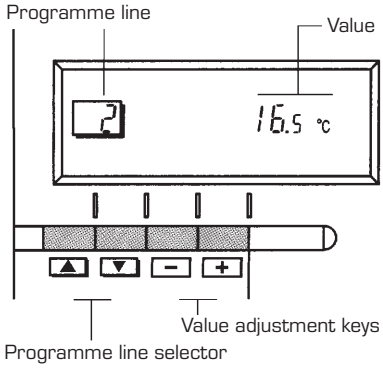

As soon as the cover is open, the display and the key functions are switched on.
The number in the square represents the programme lines that may selected with the arrow keys.

– **Temperature regulation**

Before proceeding with the adjustment in the temperature on the regulator, the thermostatic valves, which may be present, have to be regulated to the desired temperature.

In automatic mode, the apparatus switches from the fixed temperature to the reduced temperature according to the time programme. The manual switching of the temperature is done manually with the on-line key.

1 Fixed temperature:
temperature when the rooms are occupied
(basic setting)

2 Reduced temperature:
temperature during periods of absence or night

3 Hot-water service temperature:
- desired temperature of hot-water service
- comfort temperature of the hot-water service (with storage capacity boiler unit)

61 Reduced temperature of hot-water service (with storage capacity boiler unit):
temperature desired for hot-water service at reduced level.
To have access to the "reduced hot-water service temperature" parameter, press the ▲ and ▼ keys at the same time for at least 5 seconds and then go along the entered lines with the key ▼ until parameter 61 is reached. Regulate the value with − and +.

– **Heating/hot-water service programme**

With the heating programme it is possible to set the switching times of the temperature for a period of a week. The weekly programme consists of 7 daily programmes. One daily programme allows 3 phases of heating. Each phase is defined by a starting time and a finishing time. The n. 8 daily programme is for the hot-water service (if storage unit connected). If a phase is not required, the same starting and finishing time may be entered.

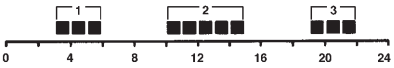

4 Select the days that correspond with the heating phase.
1= Monday, ... 7 = Sunday/8 = hot-water service programme

5 Start of phase 1: Start of first comfort period.

6 End phase 1: End of first comfort period.

7 Start phase 2: Start of second comfort period.

8 End phase 2: End of second comfort period.

9 Start phase 3: Start of third comfort period.

10 End phase 3: End of third comfort period.

11 Copying of the daily programme

+ By pressing this key it is possible to repeat the current heating programme for the **next day**.

– By pressing this key it is possible to repeat the current heating programme for the **previous day**.

As a confirmation the following day is displayed.

– **Programme for hot-water service (with storage capacity boiler unit)**

With the Logic Remote Control it is possible to manage the temperature of boiler unit on two levels (a comfort level and one at reduced temperature) in accordance with the programme chosen with parameter 62 (load hot-water service). To have access to the parameter press the ▲ and ▼ keys for at least 5 seconds and then go along the entered lines with the ▼ key until parameter 62 is reached. At this point four different programmes may be selected with – o + keys, with the following characteristics:

0 = 24 hours/ day - Hot water always available at the temperature set in parameter 3.

1 = standard - Hot water according to the daily heating programme. In the comfort periods of the heating the temperature of the boiler unit is regulated at the value set via parameter 61.

2 = sservice suspended.

3 = second daily programme (8) - Everyday of the week the temperature of the hot-water service is set according to programme B. In this case the programming is one for all the days of the week and three periods of time are available. In the periods of time set, the temperature of the boiler unit is controlled via the temperature setting of parameter 61.

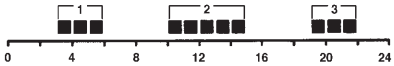

5 Start phase 1: Start time of first comfort period.

6 End phase 1: End time of first comfort period

7 Start phase 2: Start time of second comfort period.

8 End phase 2: End time of second comfort period.

9 Start phase 3: Start time of third comfort period.

10 End phase 3: End time of third comfort period.

– **Setting the time**

12 To set the current day of the week (1 = Monday/7 = Sunday)

13 To set the current hour

14 To set the current minute
Once the hour is completed, the setting of the hour changes.

With [+] and [−] keys the current hour is regulated. Pressing these keys together, the regulation is speeded up in an increasing sense.

– **Current values**

15 Display and setting of the gradient of the heating characteristics curve. When the room temperature set is not reached choose the gradient indicated in point 2.8.3

16 Display of the current boiler temperature.

17 Display of the current power of the burner and of the current operating mode (= = heating/ = hot-water service)

– **Vacation function**

18 To enter the number of days of absence.

In the display the vacation symbol will be shown ( ), on the left the day of activation (1 = Monday/7 = Sunday) and on the right the number of vacation days.

NOTE:

During the vacation the regulator will be on the availability mode.

AUTO When the set days have elapsed, the regulator will go on to the automatic function.

The vacation period may be cancelled by pressing a key of the operating mode.

– **Default values**

19 To take the setting to the default values, press the [+] and [−] keys at the same time for at least 3 seconds. As confirmation a sign will appear on the display.

ATTENTION
The values of the following line numbers previously entered will be lost.

- Temperature and time programme 1 to 10
- Vacation period 18

– Error display

Er 0

Ignition lock-out
Rotate selector CR/OFF/EST/INV/RESET on the boiler control panel to the release position ( ) to reset operation. If the lock-out re-occurs, call an authorised Service Centre.

Er 1

Safety thermostat trip
Rotate selector CR/OFF/EST/INV/RESET on the boiler control panel to the release position ( ) to reset operation. If the lock-out re-occurs, call an authorised Service Centre.

Er 68

Heating sensor fault (SM)
Call an authorised Service Centre.

Er 69

Insufficient water pressure
Reset operation using the boiler charge valve.

Er 70

Plant overpressure
Call an authorised Service Centre.

Er 192

Safety thermostat trips
Call an authorised Service Centre.

Er 193

Ventilator malfunction
Call an authorised Service Centre.

Er 195

No communication between the "Logica Remote Control" and the boiler.
Call an authorised Service Centre.