spares & parts online
IBASIS.co.uk©

PLEASE LEAVE THIS INSTRUCTION
WITH THE USER

MURELLE HE
25/55-30/55

Installation and servicing instructions

benchmark
COLLECTIVE MARK
THE MARK OF QUALITY FOR THE INSTALLATION, COMMISSIONING AND SERVICING OF DOMESTIC HEATING AND HOT WATER SYSTEMS

WRAS APPROVED PRODUCT

sime®

All descriptions and illustrations provided in this manual have been carefully prepared but we reserve the right to make changes and improvements in our products that may affect the accuracy of the information contained in this manual.

Code Of Practice

For the installation, commissioning and servicing of domestic heating and hot water products

Benchmark places responsibilities on both manufacturers and installers.* The purpose is to ensure that customers** are provided with the correct equipment for their needs, that it is installed, commissioned and serviced in accordance with the manufacturer's instructions by competent persons and that it meets the requirements of the appropriate Building Regulations. Installers are required to carry out work in accordance with the following:

Standards of Work

- Be competent and qualified to undertake the work required.
- Install, commission, service and use products in accordance with the manufacturer's instructions provided.
- Ensure that where there is responsibility for design work, the installation is correctly sized and fit for purpose.
- Meet the requirements of the appropriate Building Regulations. Where this involves notifiable work be a member of a Competent Persons Scheme or confirm that the customer has notified Local Authority Building Control (LABC), prior to work commencing.
- Complete all relevant sections of the Benchmark Checklist/Service Record when carrying out commissioning or servicing of a product or system.
- Ensure that the product or system is left in a safe condition and, whenever possible, in good working order.
- Highlight to the customer any remedial or improvement work identified during the course of commissioning or servicing work.
- Refer to the manufacturer's helpline where assistance is needed.
- Report product faults and concerns to the manufacturer in a timely manner.

Customer Service

- Show the customer any identity card that is relevant to the work being carried out prior to commencement or on request.
- Give a full and clear explanation/demonstration of the product or system and its operation to the customer.
- Hand over the manufacturer's instructions, including the Benchmark Checklist, to the customer on completion of an installation.
- Obtain the customer's signature, on the Benchmark Checklist, to confirm satisfactory demonstration and receipt of manufacturer's instructions.
- Advise the customer that regular product servicing is needed, in line with manufacturers' recommendations, to ensure that safety and efficiency is maintained.
- Respond promptly to calls from a customer following completion of work, providing advice and assistance by phone and, if necessary, visiting the customer.
- Rectify any installation problems at no cost to the customer during the installer's guarantee period.

benchmark
COLLECTIVE MARK
THE MARK OF QUALITY FOR THE INSTALLATION, COMMISSIONING AND SERVICING OF DOMESTIC HEATING AND HOT WATER SYSTEMS

*The use of the word "installer" is not limited to installation itself and covers those carrying out installation, commissioning and/or servicing of heating and hot water products, or the use of supporting products (such as water treatment or test equipment).
**Customer includes householders, landlords and tenants.

© Heating and Hotwater Industry Council (HHIC)

The Benchmark Scheme

Sime Ltd is a licensed member of the Benchmark Scheme which aims to improve the standards of installation and commissioning of domestic heating and hot water systems in the UK and to encourage regular servicing to optimise safety, efficiency and performance.

Benchmark is managed and promoted by the Heating and Hotwater Industry Council.
For more information visit www.centralheating.co.uk

CE IPX4D

Murelle HE 25/55: Gas Council number 47-283-15
Murelle HE 30/55: Gas Council number 47-283-16

CONTENTS

1	DESCRIPTION OF THE BOILER	pag.	6
2	INSTALLATION	pag.	10
3	CHARACTERISTICS	pag.	21
4	USE AND MAINTENANCE (including BENCHMARK/Mains Pressure Hot Water Storage Checklist & Service Record)	pag.	26
5	FAULT FINDING	pag.	36
6	REPLACEMENT OF PARTS	pag.	37
7	EXPLODED VIEWS	pag.	39

Important Information

IT IS A STATUTORY REQUIREMENT THAT ALL GAS APPLIANCES ARE INSTALLED BY COMPETENT PERSONS, IN ACCORDANCE WITH THE GAS SAFETY (INSTALLATION AND USE) REGULATIONS (CURRENT EDITION). The manufacturer's instructions must not be taken as overriding any statutory requirements, and failure to comply with these regulations may lead to prosecution.

No modifications to the appliance should be made unless they are fully approved by the manufacturer.

GAS LEAKS: DO NOT OPERATE ANY ELECTRICAL SWITCH, OR USE A NAKED FLAME. TURN OFF THE GAS SUPPLY AND VENTILATE THE AREA BY OPENING DOORS AND WINDOWS CONTACT THE GAS EMERGENCY SERVICE ON 0800111999.

benchmark COLLECTIVE MARK
THE MARK OF QUALITY FOR THE INSTALLATION, COMMISSIONING AND SERVICING OF DOMESTIC HEATING AND HOT WATER SYSTEMS

Please refer to commissioning instructions for filling in the checklist of this installation guide.
Note: All Gas Safe registered installers carry a ID Card.
You can check your installer is Gas Safe Registered by calling 0800 408 5577

IMPORTANT

When carrying out commissioning of the boiler, you are highly recommended to perform the following checks:

- Make sure that there are no liquids or inflammable materials in the immediate vicinity of the boiler.
- Make sure that the electrical connections have been made correctly and that the earth wire is connected to a good earthing system.
- Open the gas tap and check the soundness of the connections, including that of the burner.
- Make sure that the boiler is set for operation for the type of gas supplied.
- Check that the flue pipe for the outlet of the products of the combustion is unobstructed and has been properly installed.
- Make sure that any shutoff valves are open.
- Make sure that the system is charged with water and is thoroughly vented.
- Check that the circulating pump is not jammed (CAUTION: protect the control panel from any water lost from the pump.
- Purge the system, bleeding off the air present in the gas pipe by operating the pressure relief valve on the gas valve inlet.
- Ensure that all the controls and safety devices have been demonstrated to the user.
- Ensure that all the manuals and documentation that are supplied with the boiler are left with the user.

1 DESCRIPTION OF THE BOILER

1.1 INTRODUCTION

MURELLE HE 25-30/55 are premixed gas condensation thermal modules that employ a microprocessor-based technology to control and manage all the functions.
All modules are compliant with European Directives 90/396/CE, 2004/108/CE, 2006/95/CE and 92/42/CE.
For optimum installation and operation, always follow the instructions provided in this manual.
The products manufactured and sold by Sime do not contain any banned materials or substances (ie they comply with ISO9000:2000).

1.2 UNPACK AND CHECK THE CONTENTS, AND PACKAGING REMOVAL.

1.2.1 Handling the boiler

Due to the weight of the boiler, take care to avoid personal injury or damage.

1.2.2 Storage Prior to installation

The boiler must be stored horizontally on its pallet prior to installation.
Do not stack more than six units.

1.2.3 Unpacking the boiler

The boiler is supplied fully assembled, the kit includes :
- boiler
- Valve pack
- guarantee
- these Installation/Users instructions
- wall mounting template.

Remove the strapping and carefully remove the carton and packaging.
Check the contents, instructions, valve pack, and hanging bracket.
Remove the two bolts securing the boiler to the pallet.

1.3 DIMENSIONS

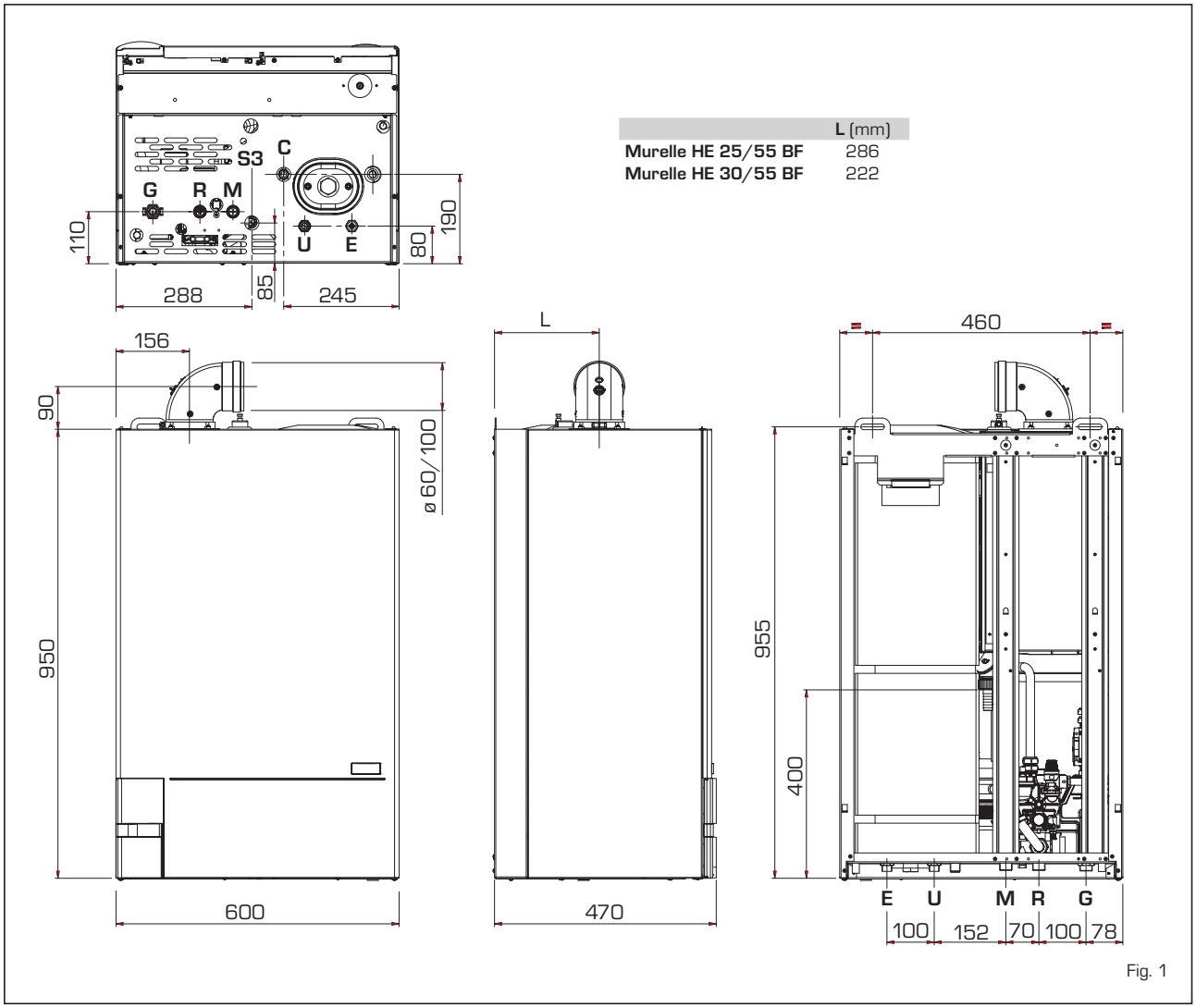

	L (mm)
Murelle HE 25/55 BF	286
Murelle HE 30/55 BF	222

Fig. 1

CONNECTIONS

R	C.H. return	22 mm	Compression
M	C.H. flow	22 mm	Compression
G	Gas connection	15 mm	Compression
E	D.H.W. inlet	22 mm	Compression
U	D.H.W. outlet	15 mm	Compression
C	Ricirculation	15 mm	Compression
S3	Condensation outlet ø 20		

SERVICE CLEARANCES

ABOVE THE APPLIANCE CASING	300 mm
AT THE R.H.S.	20 mm
AT THE L.H.S.	20 mm
BELOW THE APPLIANCE CASING	400 mm
IN FRONT OF THE APPLIANCE	500 mm

1.4 TECHNICAL FEATURES

Models		25/55 BF	30/55 BF
Heat output			
Nominal (80-60°C)	kW	23.9	28.9
Nominal (50-30°C)	kW	26.2	31.6
Reduced G20 (80-60°C)	kW	6.1	7.6
Reduced G20 (50-30°C)	kW	7.0	8.5
Reduced G31 (80-60°C)	kW	7.5	8.7
Reduced G31 (50-30°C)	kW	8.5	9.6
Heat input			
Nominal	kW	24.5	29.5
Reduced G20/G31	kW	6.5/8.0	8.0/9.0
Max/min useful yield (80-60°C)	%	94/97.5	95/98
Max/min useful yield (50-30°C)	%	107/107	107/107
Useful yield at 30% of the load (50-30°C)	%	107	107
Termal efficiency (CEE 92/42 directive)		★★★★	★★★★
Losses after shutdown to 50°C (EN 483)	W/h	90	95
Supply voltage	V-Hz	230-50	230-50
Adsorbed power consumption	W	115	115
Electrical protection grade	IP	X4D	X4D
C.H. setting range	°C	20/80	20/80
Water content boiler	l	9.6	10
Maximum water head	bar	3	3
Maximum temperature	°C	85	85
Capacity/pressure of the heating expansion vessel	l/bar	10/1	10/1
Normal operating pressure of the system (max)	bar	5.5	5.5
D.H.W. setting range	°C	30/60	30/60
D.H.W. flow rate (EN 625)	l/min	15.5	17.5
Continuous D.H.W. flow rate Δt 30°C	l/min	11.4	13.8
Continuous D.H.W. flow rate Δt 35°C	l/min	9.8	11.8
D.H.W pressure min/max	bar	0.2/5.5	0.2/5.5
D.H.W. tank capacity	l	51	51
Recuperation time between 15 and 60°C	min	9' 55"	10' 10"
Recuperation heat of 70% contents	min	3' 40"	3' 30"
D.H.W. expansion vessel capacity / charge pressure	l/bar	2.5/3.0	2.5/3.0
Exhaust fumes temperature at max flow rate (80-60°C)	°C	70	70
Exhaust fumes temperature at min. flow rate (80-60°C)	°C	65	65
Exhaust fumes temperature at max flow rate (50-30°C)	°C	40	40
Exhaust fumes temperature at min. flow rate (50-30°C)	°C	35	35
Smokes flow min/max	kg/h	12/42	14/50
CO_2 at max/min flow rate G20 - G31	%	9.0/9.0 - 10.0/10.0	9.0/9.0 - 10.0/10.0
CE certification	n°	1312BS5039	1312BS5039
Category		II2H3P	II2H3P
Type		B23P-53P/C13-33-43-53-83	B23P-53P/C13-33-43-53-83
NOx emission class		5 (< 70 mg/kWh)	5 (< 70 mg/kWh)
Weight when empty	kg	68	70
Main burner nozzle			
Quantity nozzles	n°	1	1
G20/G31 nozzle diameter	ø	6.0/4.4	6.0/4.4
Consumption at maximum/minimum flow rate			
G20	m^3/h	2.59/0.53	3.12/0.66
G31	kg/h	1.90/0.62	2.29/0.62
Gas supply pressure			
G20/G31	mbar	20/37	20/37

1.5 FUNCTIONAL DIAGRAM

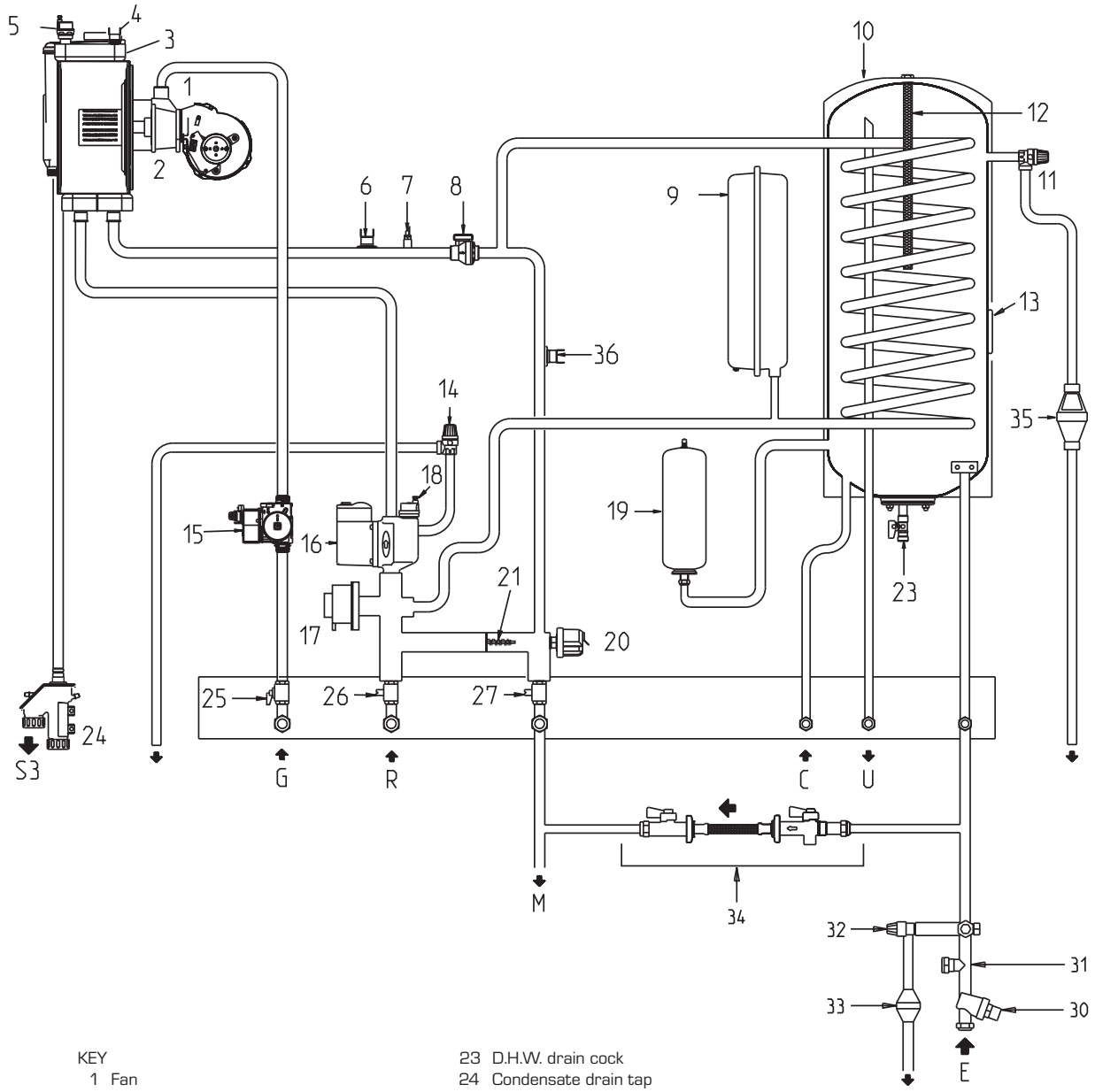

KEY

1 Fan
2 Air/gas mixer
3 Primary exchanger
4 Limit stat
5 Air relief valve
6 Safety thermostat 100°C
7 C.H. sensor (SM)
8 Flow switch
9 C.H. Expansion vessel
10 D.H.W. tank
11 TPR valve 7 BAR 90°C -TPRV
12 Magnesium anode
13 D.H.W. sensor (SB)
14 C.H. Safety valve 3 BAR
15 Gas valve
16 Pump
17 Diverter valve
18 Air bleed valve
19 D.H.W. expansion vessel
20 Water pressure transducer
21 Automatic bypass
23 D.H.W. drain cock
24 Condensate drain tap
25 Gas cock
26 Heating system return cock
27 Heating system delivery cock
30 Pressure reducing valve 3.5 BAR
31 Single check valve
32 Expansion relief valve 6 BAR
33 Tundish expansion relief valve
34 Filling loop
35 Tundish
36 D.H.W. over heating thermostat 85°C

CONNECTIONS

R C.H. return
M C.H. flow
G Gas connection
E D.H.W. inlet
U D.H.W. outlet
C Recirculation
S3 Condensation outlet

Fig. 2

1.6 MAIN COMPONENTS

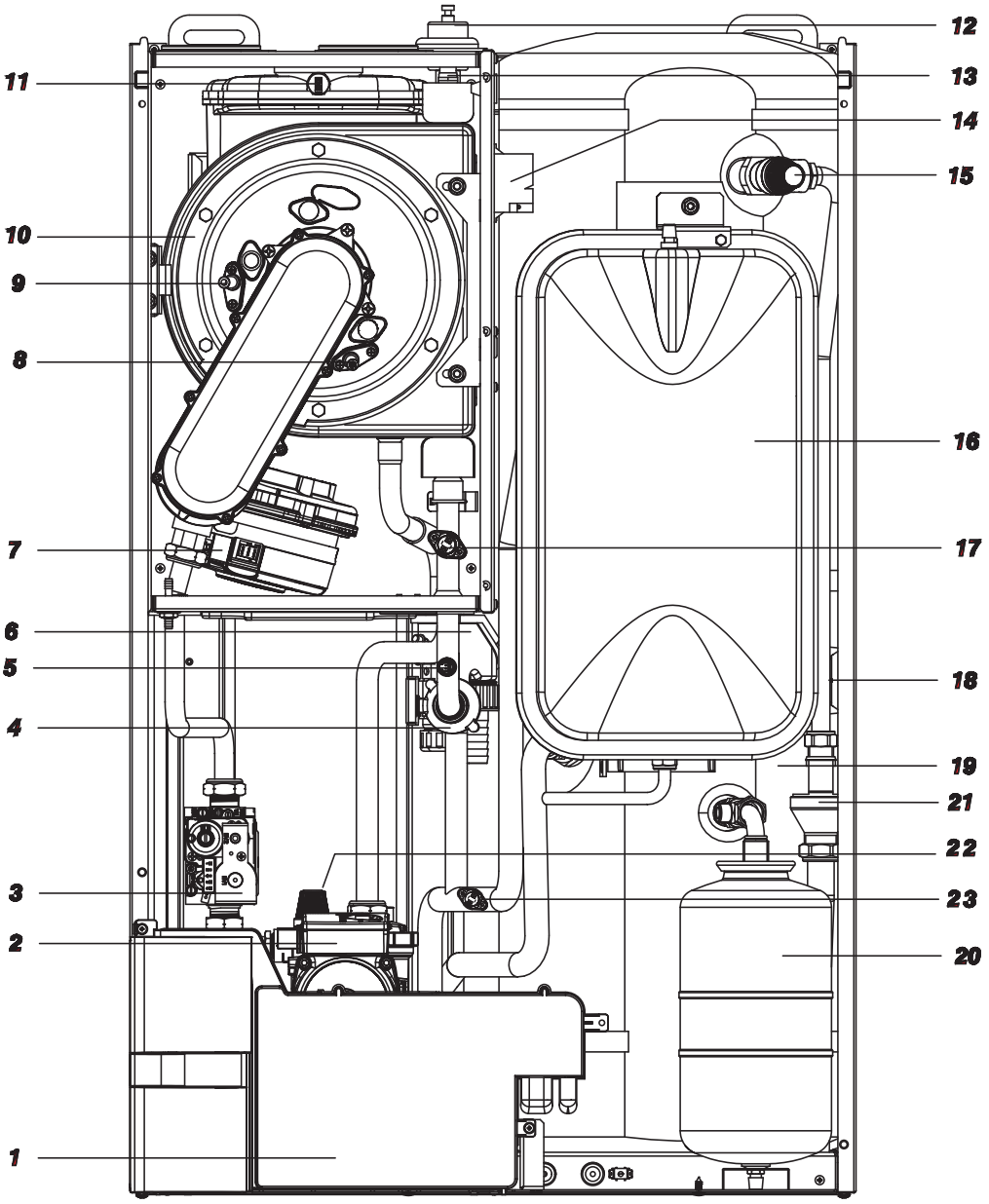

KEY

1 Control panel
2 Heating system circulator
3 Gas valve
4 Flow switch
5 C.H. sensor (SM)
6 Condensate drain tap
7 Fan
8 Detection electrode
9 Ignition electrode
10 Primary exchanger
11 Exhaust fumes probe
12 Air relief valve
13 Limit stat 90°C
14 Ignition transformer
15 D.H.W. combined temperature and pressure relief valve
16 Expansion vessel
17 Safety thermostat 100°C
18 D.H.W. sensor (SB)
19 D.H.W. tank
20 D.H.W. expansion vessel
21 Tundish
22 C.H. safety valve 3 BAR
23 D.H.W. over heating thermostat 85°C

Fig. 3

2 INSTALLATION

Where no specific instructions are given, the installation should be in accordance with the relevant recommendations in the current editions of the following British Standards and Codes of Practice: BS 5440-1, BS 5440-2, BS 5449, BS 5482 (propane installations), BS 5546, BS 6700, BS 6798, BS 6891, Institute of Gas Engineer document IGE/UP-7, BS 7074 (expansion vessel), and to other relevant British Standards or code of Practice as necessary. It is a **Statutory Requirement** that the installation conforms to the appropriate Building Regulations either The Building Regulations, The Building Regulations (Scotland), Building Regulations (Northern Ireland), the Water Fitting Regulations or Water Byelaws in Scotland, and the current I.E.E Wiring Regulations. When handling, due consideration should be given to the appliance weight. If the appliance is not to be installed immediately it should be stored in a clean dry place.

2.1 VENTILATION REQUIREMENTS

Detailled recommendations for air supply are given in BS5440:2. The following notes are for general guidance:

- It is not necessary to have a purpose provided air vent in the room or compartment in which the appliance is installed. However, suitable clearances for maintenance and servicing should be provided, see fig. 1.

2.1.1 Anti-freeze function

The boilers are equipped with anti-freeze function which activates the pumps and the burner when the temperature of the water contained inside the appliance drops to below 6°C. The anti-freeze function is ensured, however, only if:

- the boiler is correctly connected to the gas and electricity supply circuits;
- the boiler is constantly fed;
- the boiler ignition is not blocked;
- the essential components of the boiler are all in working order.

In these conditions the boiler is protected against frost down to an environmental temperature of -5°C.

ATTENTION: In the case of installation in a place where the temperature drops below 0°C, the connection pipes must be protected.

2.2 BOILER SUPPORT BRACKET

Ensure that the wall on which the boiler is to be mounted is capable of supporting the weight of the boiler when filled(123kg - 25/55 and 125kg - 30/55)

- Position the bracket ensuring that the boiler is fitted with sufficient clearance to allow for the fitting of the valve connections.
- Fix the bracket level and with fixings capable of supporting the weight.
- Hang the boiler and then tighten the screws indicated in fig 4.

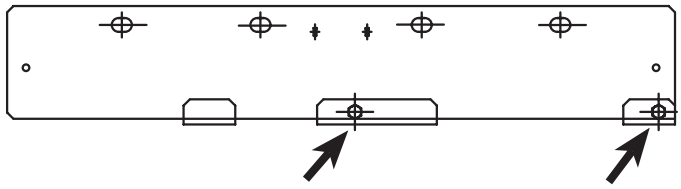

Fig. 4

2.3 HOW TO FIT C.H. AND D.H.W. FITTINGS AND GAS COCK (fig. 5)

– C.H. CONNECTIONS (R & M)
Fit the two isolation valves (10) using the gasket supplied (6). Fit the C.H. filling loop between the C.H and D.H.W. circuits, ensuring the correct position and orientation of the isolation valves.

– D.H.W. CONNECTION (E & U)
Fit the supplied; pressure reducing valve (17), check valve (16), and expansion relief valve assembly (14) with its associated tundish (15), ensure that on completion of the installation that the tun dish is visible to the user, in the D.H.W. supply to the appliance, the flow from this assembly should be connected to the cold water inlet (E) via the flow regulator housing supplied. Ensure flow regulator (11) and gasket (1) supplied, are fitted in the flow regulator housing.
See fig. 5 and fig. 6 for installation details. It is important that no isolating valve is fitted between the expansion relief valve and the inlet to the D.H.W. tank. Any additional D.H.W. drain down tap fitted should be positioned as low as possible to ensure that at least 80% of the D.H.W. tank's capacity can be drained. If installed in a Hard Water area, then a suitable device should be fitted to treat the mains supply to the appliance (Contact your Water Distribution Company for advice on suitable devices). Fit the quarter bend (2) to the hot water outlet (U) using the gasket supplied (1).

– GAS CONNECTION (C)
Fit the gas cock (12) to the gas connection (R) using the gasket supplied (6).

2.4 WATER SYSTEMS - GENERAL

This appliance is designed for connection to sealed central heating water systems. Check that the mains water flow is sufficient to produce the required DHW flow rate but does not exceed 4 bar pressure.
A expansion relief valve is incorporated within the valve kit. Inlet safety kit and all safety devices must be installed.

<u>For balanced pressures in premises</u>
For balanced pressure to the whole premises an additional pressure reducing valve should be installed at the inlet to the premises set at 3.5 BAR.
The maximum water supply pressures to the pressure reducing must be of 16 BAR.

2.4.1 Treatment of Water Circulating Systems

- All recirculatory systems will be subject to corrosion unless an appropriate water treatment is applied. This means that the efficiency of the system will deteriorate as corrosion sludge accumulates within the system, risking damage to pump and valves, boiler noise and circulation problems.
- For optimum performance after installation this boiler and its associated central heating system must be flushed in accordance with the guidelines given in BS 7593 "Treatment of water in domestic hot water central heating systems".
- This must involve the use of a proprietary cleanser, such as Sentinel X300 or X400, or Fernox Superfloc. Full instructions are supplied with the products, but for immediate information please contact GE Betz (0151 420 9563) or Fernox (01799 550 811) directly.
- For long term protection against corrosion and scale, after flushing it is recommended that an inhibitor such as Sentinel X100, or Fernox MB-1 or Copal is dosed in accordance with the guidelines given in BS 7593. **Failure to flush and add inhibitor to the system may invalidate the appliance warranty.**
- It is important to check the inhibitor concentration after installation, system modification and at every service in accordance with the manufacturer's instructions. (Test kits are available from inhibitor stockists).

2.4.2 Requirements for sealed water systems

The heating system design should be based on the following information:

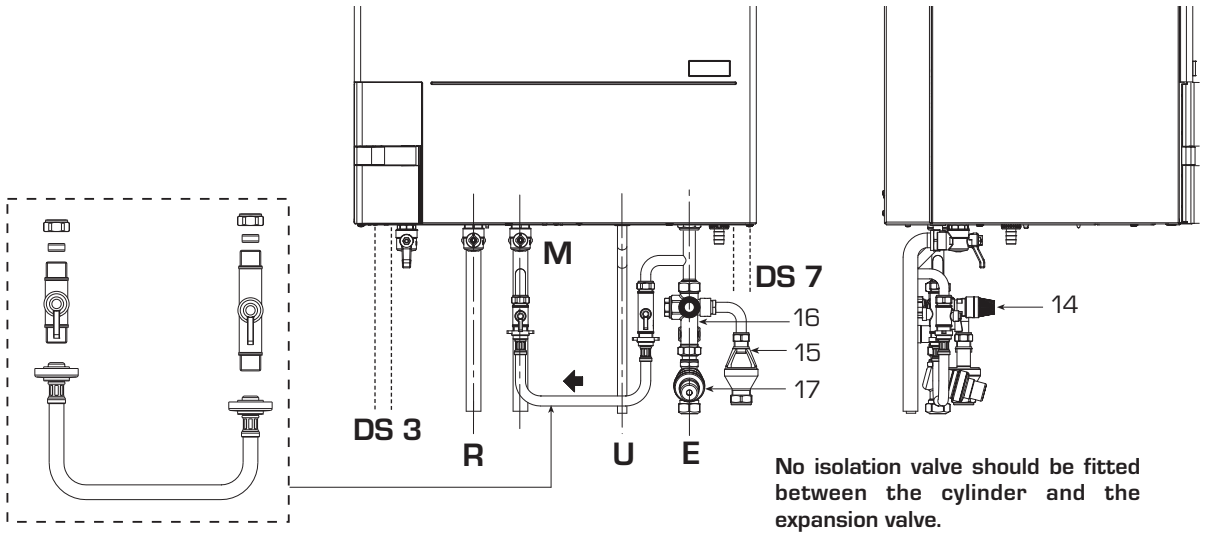

No isolation valve should be fitted between the cylinder and the expansion valve.

KEY

1	Gasket ø 11,5/18,5 x 2
6	Gasket ø 17/24 x 2
8	Brass olive for 22 mm pipe
9	Locking nut 1-1/8"
10	Cock 3/4"
11	Flow regulator
12	Gas cock
13	Filling loop
14	Expansion relief valve
15	Tundish expansion relief valve
16	Single check valve
17	Pressure reducing valve
18	Curve return system
19	Curve flow system
20	D.H.W. outlet pipe
21	Brass olive for 15 mm pipe
22	Locking nut 1/2"

CONNECTIONS

G	Gas inlet
M	C.H. flow
R	C.H. return
U	D.H.W. outlet
E	D.H.W. inlet
S3	Condensation outlet
DS 3	3 bar discharge
DS 7	7 bar discharge

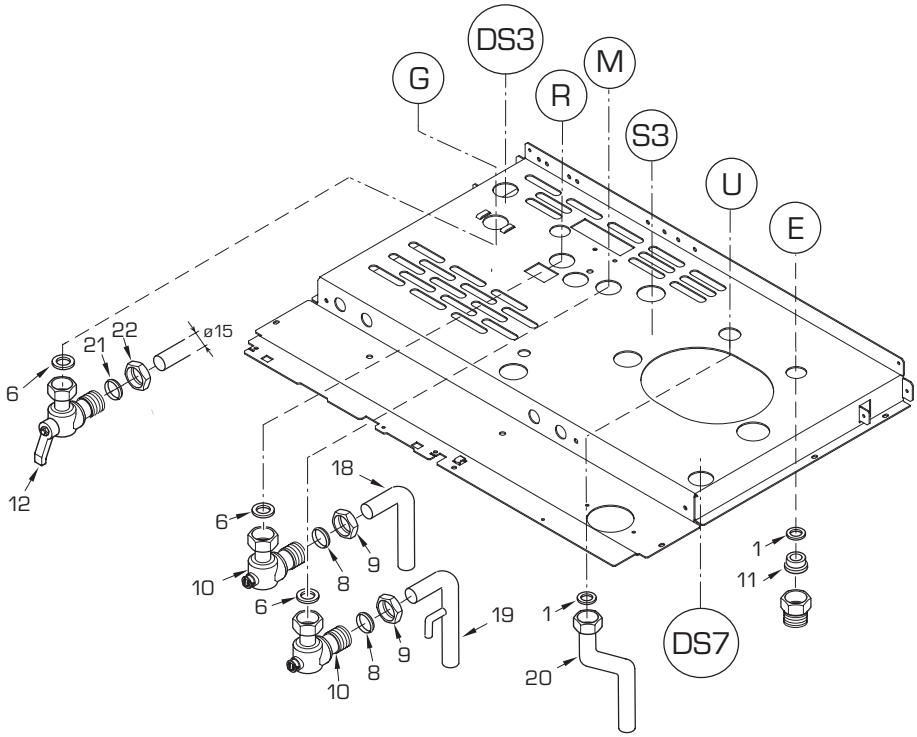

Fig. 5

a) The available pump head is given in fig. 20.

b) The burner starts when the C.H. flow reaches 400÷450 l/h. This safety condition is ensured by the flow switch.

c) The appliance is equipped with an internal by-pass that operates with system heads (H) greater than 3 m. The maximum flow through the by-pass is about 300 l/h. If thermostatic radiator valves are to be installed, at least one radiator should be without a thermostatic valve (usually the bathroom radiator).

d) A sealed system must only be filled by a competent person using the filling loop as shown in fig 5.

e) To fill the cylinder, open a DHW tap, then turn on the domestic water supply. When water runs from the tap turn it off. Repeat at each DHW tap.
NOTE: there should be no isolation valve fitted between the cylinder and the expansion valve.

f) To drain the cylinder see fig. 2 number 23.

2.4.3 Discharge Pipes and fittings

The position of any tundish must be visible to the occupants and any tundish, drain valve and discharge pipe and must be sited away from any electrical components.
The 7 and 3 bar PRV's are called out with the number 15 and 22 on fig. 3.
The connections to the expansion relief valve and temperature and pressure relief valve should not be used for any other purpose.
See fig. 6 for example of the discharge pipe(s) for the temperature and pressure

relief valve, and expansion relief valve terminations.
Note: it is permitted to connect discharge pipes together provided that the joint pipe is sized to accommodate the combined flow.

2.4.4 Expansion Vessel (C.H. only)

C.H. EXPANSION VESSEL – The integral expansion vessel is pre-charged to a pressure of 1.0 bar, which should be checked before the C.H. water system is filled.
This vessel is suitable for correct operation of system capacities up to 82 litre capacity. If the actual C.H. system volume is greater, then an additional vessel must be fitted to the system.
For systems where the volume is greater, the additional expansion vessel volume can be determined by multiplying the volume in excess of that which can be accommodated by the appliance by the factor 0.901. BS 7074 gives further details regarding C.H. expansion vessel sizing.

2.4.5 Connection of condensation water trap

The drip board and its water trap must be connected to a civil drain through a pipe with a slope of at least 5 mm per metre to ensure drainage of condensation water.

The plastic pipes normally used for civil drains are the only type of pipe which is appropriate for conveying condensation to the building's sewer pipes.

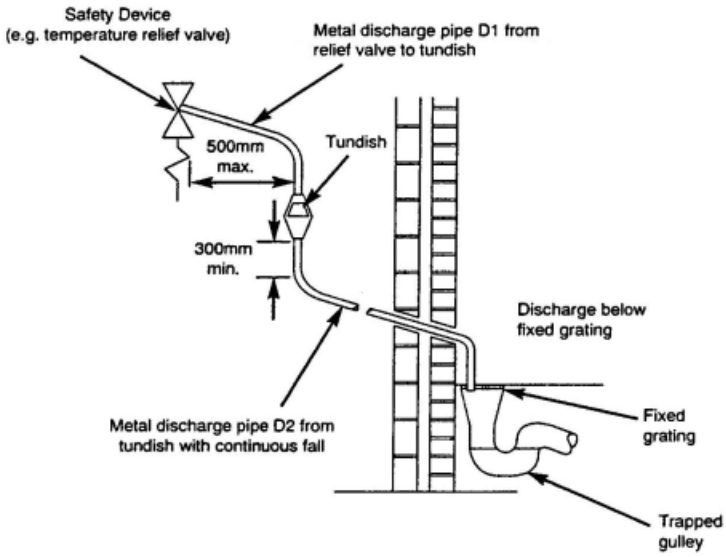

Valve outlet size	Minimum size of discharge pipe D1	Minimum size of discharge pipe D2 from tundish	Maximum resistance allowed, expressed as a length of straight pipe (i.e. no elbows or bends)	Resistance created by each elbow or bend
G 1/2	15mm	22mm 28mm 35mm	up to 9m up to 18m up to 27m	0.8m 1.0m 1.4m
G 3/4	22mm	28mm 35mm 42mm	up to 9m up to 18m up to 27m	1.0m 1.4m 1.7m
G 1	28mm	35mm 42mm 54mm	up to 9m up to 18m up to 27m	1.4m 1.7m 2.3m

Fig. 6

IMPORTANT:
- **The insertion of each additional 90° bend with a diameter of 60/100 (code 8095850) reduces the available section by 1.5 meters.**
- **The insertion of each additional 90° bend with a diameter of 80/125 (code 8095870) reduces the available section by 2 meters.**
- **Each additional 45° curve installed a diameter of 60/100 (code 8095550) the 80/125 (code 8095970) reduces the available length by 1.0 metres.**
- **During assembly it is important to make sure that the kit with axial pipes (1) is positioned HORIZONTAL FLUES MUST BE LEVEL..**

NOTE: Before connecting accessories, it is always advisable to lubricate the internal part of the gaskets with silicon products. Avoid using oils and greases.

Model	Length of pipe ø 60/100			Length of pipe ø 80/125		
	H	V		H	V	
		Min	Max		Min	Max
25/55	6 m	1.3 m	8 m	12 m	1.2 m	15 m
30/55	5 m	1.3 m	7 m	10 m	1.2 m	13 m

LIST OF ø 60/100 ACCESSORIES
1a-b Coaxial duct kit L. 790 code 8096250
2a Extension L. 1000 code 8096150
2b Extension L. 500 code 8096151
3 Vertical extension L. 140 with coupling code 8086950

LIST OF ø 80/125 ACCESSORIES
1a-b Coaxial duct kit L. 785 code 8096253
2a Extension L. 1000 code 8096171
2b Extension L. 500 code 8096170
3 Adapter for ø 80/125 code 8093150

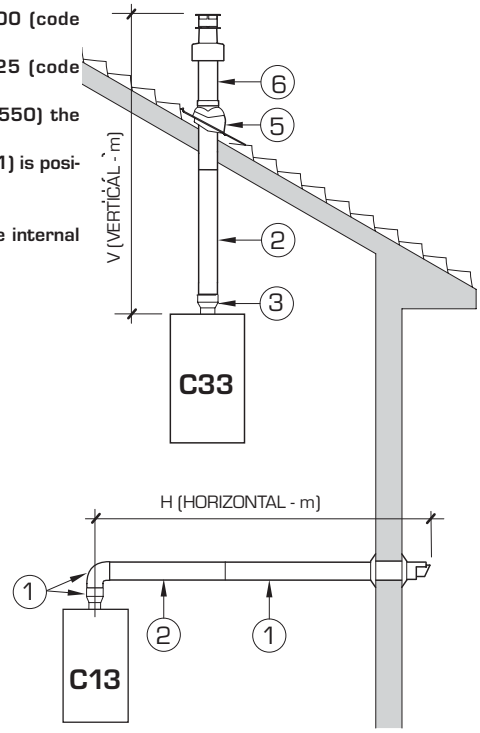

Fig. 7

2.4.6 Filter on the gas pipe

The gas valve is supplied ex factory with an inlet filter, which, however, is not adequate to entrap all the impurities in the gas or in gas main pipes.
To prevent malfunctioning of the valve, or in certain cases even to cut out the safety device with which the valve is equipped, install an adequate filter on the gas pipe.

2.4.7 Discharge Pipe

See fig. 6 for example discharge pipe terminations.

2.5 INSTALLATION OF COAXIAL DUCT (ø 60/100 - ø 80/125)

The axial suction and discharge pipes are supplied in a special kit (that can be purchased separately) along with assembly instructions. The diagrams of fig. 7 illustrate some examples of different types of discharge modalities allowed and the maximum lengths that can be reached.

2.6 INSTALLATION OF SEPARATE DUCTS (ø 80)

Separate duct kit code 8089911 is used to connect twin 80mm pipes. See fig 8.
The maximum overall length of the flue is determined by the head losses of the individual components and must not exceed 15mm H2O. Additionally the length of either the inlet or exhaust pipe must not exceed 50 m. See **Table 1** for information on the load losses of single accessories and **Fig. 9** for types of "smoke outlet"-"air inlet".

2.6.1 Separate ducts kit

The diagrams of Figure 9 show a few examples of the permitted exhausts configurations.

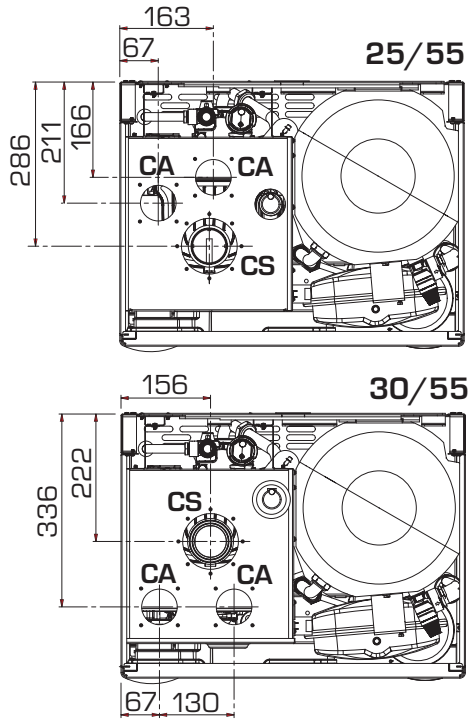

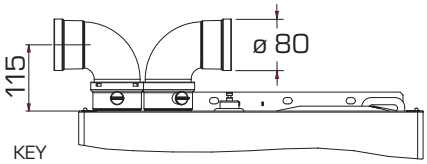

KEY
CA Inlet
CS Outlet

TABLE 1 - ACCESSORIES ø 80

Accessories ø 80	Head loss (mm H2O)			
	25/55		**30/55**	
	Inlet	Outlet	Inlet	Outlet
Coaxial duct kit	–	–	–	–
90° elbow MF	0.20	0.25	0.25	0.30
45° elbow MF	0.15	0.15	0.20	0.20
Extension L. 1000 (horizontal)	0.15	0.15	0.20	0.20
Extension L. 1000 (vertical)	0.15	0.15	0.20	0.20
Wall terminal	0.10	0.25	0.10	0.35
Wall coaxial exhaust *				
Roof outlet terminal *	0.80	0.10	1.10	0.15

*** The losses of the roof terminal on the air intake side, include already the adaptor code 8091400/01.**

Fig. 8

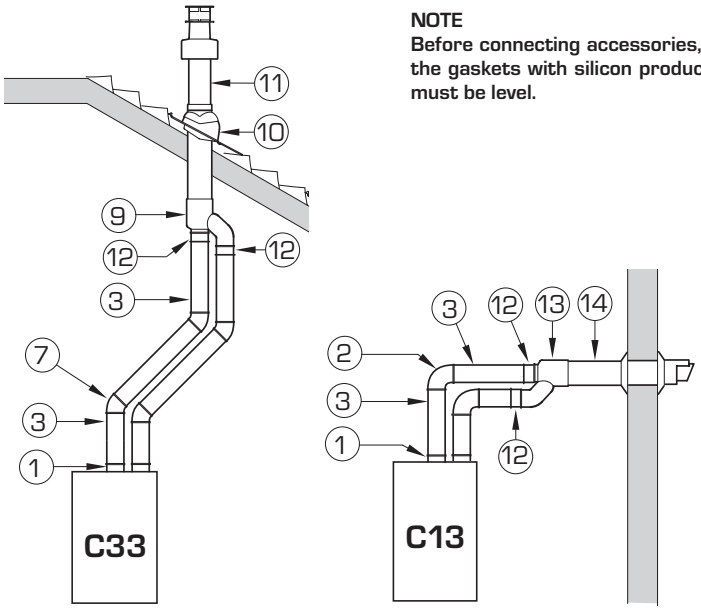

NOTE
Before connecting accessories, it is always advisable to lubricate the internal part of the gaskets with silicon products. Avoid using oils and greases. Horizontal terminals must be level.

LIST OF ø 80 ACCESSORIES

1 Coaxial duct kit code 8089911
2 Additional 90° MF curve code 8077450 (6 pz.)
3 a Extension L. 1000 code 8077351 (6 pz.)
3 b Extension L. 500 code 8077350 (6 pz.)
7 a Additional 45° MF curve code 8077451(6 pz.)
7 b Additional 90° MF curve code 8077450 (6 pz.)
9 Manifold, code 8091400
10 Tile for joint code 8091300
11 Terminal for roof exit L. 1381 code 8091204
12 ——
13 Union suction/exhaust code 8091401
14 Coaxial exhaust ø 80/125 L. 885 code 8091210

Fig. 9

2.7 POSITIONING THE OUTLET TERMINALS

The outlet terminals for forced-draught appliances may be located in the external perimeter walls of the building. To provide some indications of possible solutions, **Table 2** gives the minimum distances to be observed, with reference to the type of building shown in fig. 9.

2.8 ELECTRICAL CONNECTION

The boiler is supplied with an electric cable. Should this require replacement, it must be purchased exclusively from SIME.
The electric power supply to the boiler must be 230V - 50Hz single-phase through a fused main switch, fused at 3 amps with at least 3 mm spacing between contacts.
Respect the L and N polarities and the earth connection.
NOTE: SIME declines all responsibility for

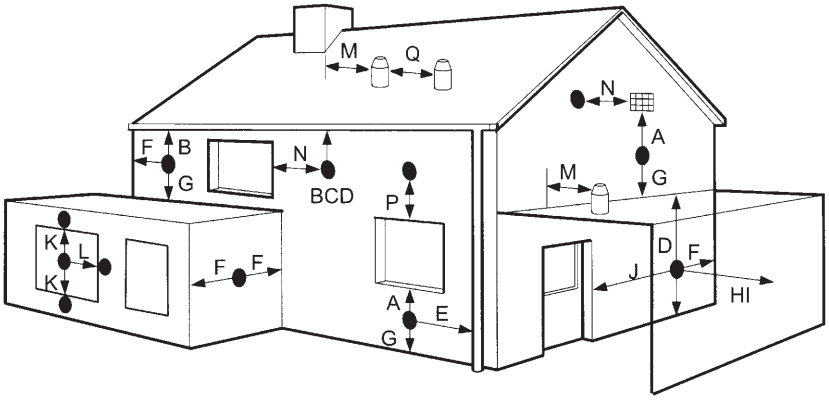

TABLE 2

Terminal position		Minimum spacing	
A	Directly below an openable window, air vent or any other ventilation opening	300 mm	12 in
B	Below guttering, drain pipes or soil pipes	75 mm	3 in
C/D	Below eaves, balconies or carport roof	200 mm	8 in
E	From vertical drain pipes or soil pipes	75 mm	3 in
F	From internal or external corners	300 mm	12 in
G	Above adjacent ground, roof or balcony level	300 mm	12 in
H	From a boundary or surface facing the boiler	600 mm	24 in
I	From a terminal facing the terminal	1,200 mm	48 in
J	From an opening in the carport (eg door, window into dwelling)	1,200 mm	48 in
K	Vertically from a terminal on the same wall	1,500 mm	60 in
L	Horizontally from a terminal on the same wall	300 mm	12 in
M	Horizontally from a vertical terminal to a wall	300 mm	12 in
N	Horizontally from an openable window or other opening	300 mm	12 in
P	Above an openable window or other opening	300 mm	12 in

- If the terminal discharges into a pathway or passageway check that combustion products will not cause nuisance and that the terminal will not obstruct the passageway.
- Where the lowest part of the terminal is fitted less than 2 m (78 in) above ground, above a balcony or above a flat roof to which people have access, the terminal MUST be protected by a purpose designed guard. Terminal guards are available from Quinnell, Barrett, and Quinnell, Old Kent Road, London. State model C2, (G.C. Part No 382946).
- Where the terminal is fitted within 850 mm (34 in) of a plastic or painted gutter, or 450 mm (18 in) of painted eaves, an aluminium shield at least 1,500 mm (59 in) long must be fitted to the underside of the painted surface.
- The air inlet/outlet flue duct MUST NOT be closer than 25 mm (1 in) to combustible material.
- In certain weather conditions the terminal may emit a plume of steam. This is normal but positions where this would cause a nuisance should be avoided.

Fig. 9

injury or damage to persons ,animals or property, resulting from the failure to provide for proper earthing of the appliance.

2.8.1 Room Thermostat

The heat demand can by a "clean contact" (conforming to EN607301), room stat or programmer connected to the "TA" connection (fig 11) , CN6 terminals 7&8, after removing the link.
Alternatively the heat demand can be by a 230v switched control, connected to terminal 14 on connector CN7 and removal of the TA link.

2.8.2 External Control CR53

A CR53 external control (part number 8092227),can be connected to the boiler.
This will control the heating function of the boiler. The domestic hot water will continue to be controlled by the boiler keypad.
NOTE: Reset parameter 10 to 2 (PAR 10 = 2).

2.8.3 Remote control CR 73 connection (optional)

The boiler is designed for connection to a remote control unit, supplied on request (code 8092226). The remote control unit CR 73 allows for complete remote control of the boiler, except reset.
The boiler display will show the following message:

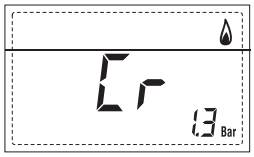

For installation and use of the remote control, follow the instructions in the package.
NOTE: Ensure PAR 10 set to 1 (PAR 10 = 1).

2.8.4 External sensor connection

The boiler is designed for connection to an external temperature sensor, supplied on request (code 8094101), which can automatically regulate the temperature value of the boiler output according to the external temperature.
For installation, follow the instruction in the package.

2.8.5 Remote RF control

The boiler is designed for connection to RF remote controllers(mechanical - code 8092231 or digital - code 8092232), which can control the central heating function.

2.8.6 Use with different electronic systems

Some examples are given below of boiler systems combined with different electronic systems. Where necessary, the parameters to be set in the boiler are given.
The electrical connections to the boiler refer to the wording on the diagram (fig. 11).
The zone valve control starts at every demand for heating of the zone 1 (it is from part of the TA1 or the CR).

Description of the letters indicating the components shown on the system diagrams:

M	System output
R	System return
CR	Remote control CR73
SE	External temperature sensor
TA1-2-3-4	Zone room thermostat
CT1-2	Zone room thermostat internal time clock
VZ1-2	Zone valve
RL1-2-3-4	Zone relay
SI	Hydraulic separator
P1-2-3-4	Zone pump
IP	Floor system
EXP	Expansion card (code 8092233)
VM	Three-way mixer valve

1 BASIC SYSTEM
SYSTEM WITH A DIRECT ZONE AND ROOM THERMOSTAT, OR WITH A CLIMATIC REGULATOR CR 53 (Code 8092227) OR WITH REMOTE CONTROL CR 73 (Code 8092226) AND EXTERNAL SENSOR (Code 8094101)

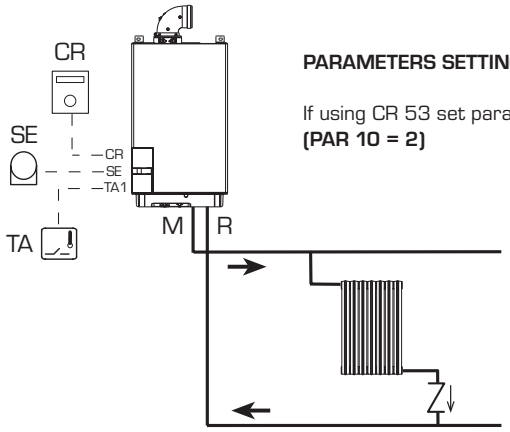

PARAMETERS SETTINGS

If using CR 53 set parameter 10 to 2
(PAR 10 = 2)

2 BASIC SYSTEM

MULTI-ZONE SYSTEM WITH PUMP, ROOM THERMOSTAT AND EXTERNAL SENSOR (Code 8094101)

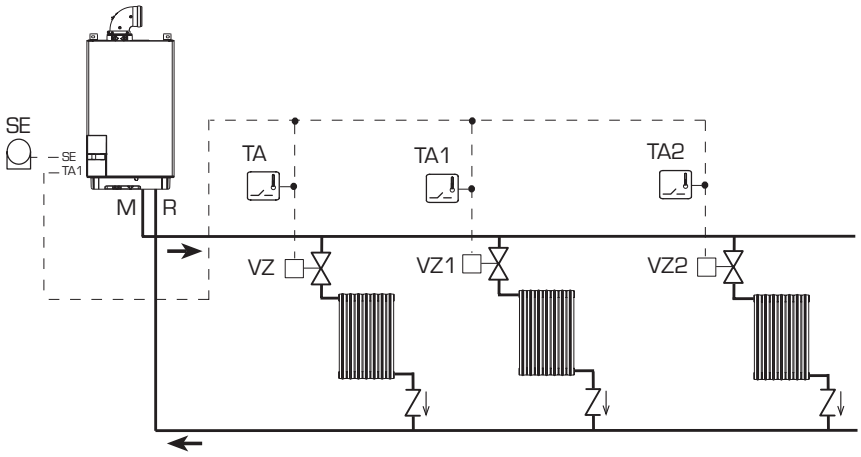

3 BASIC SYSTEM

MULTI-ZONE SYSTEM WITH PUMP, ROOM THERMOSTAT AND EXTERNAL SENSOR (Code 8094101)

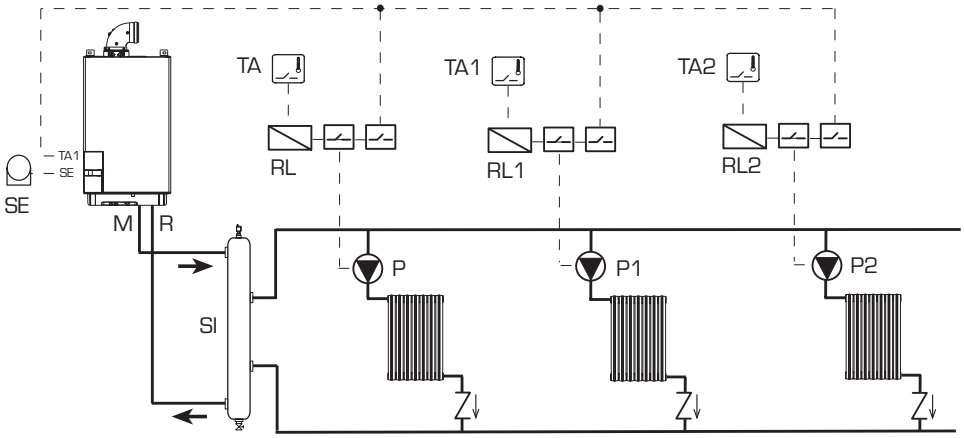

4 BASIC SYSTEM

MULTI-ZONE SYSTEM WITH VALVE, ROOM THERMOSTAT, REMOTE CONTROL CR 73 (Code 8092226) AND EXTERNAL SENSOR (Code 8094101)

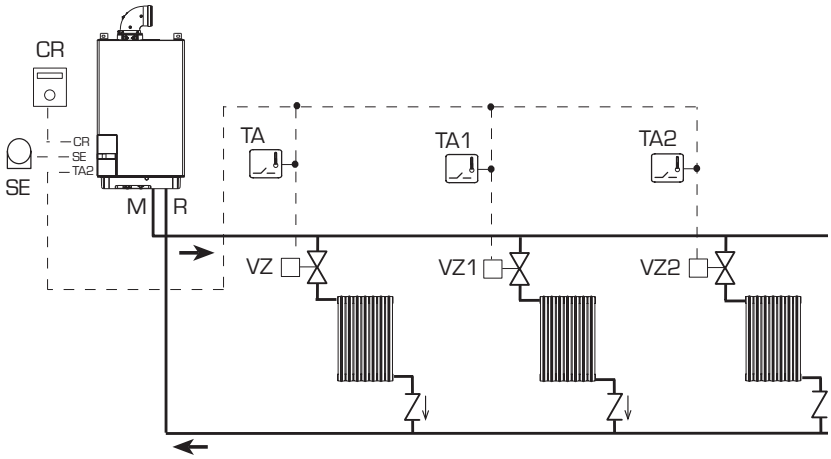

PARAMETERS SETTINGS

To use the remote control (CR) as remote control panel for the boiler rather than as room reference, set:
PAR 7 = 0

5 BASIC SYSTEM

MULTI-ZONE SYSTEM WITH VALVE, ROOM THERMOSTAT, REMOTE CONTROL CR 73 (Code 8092226) AND EXTERNAL SENSOR (Code 8094101)

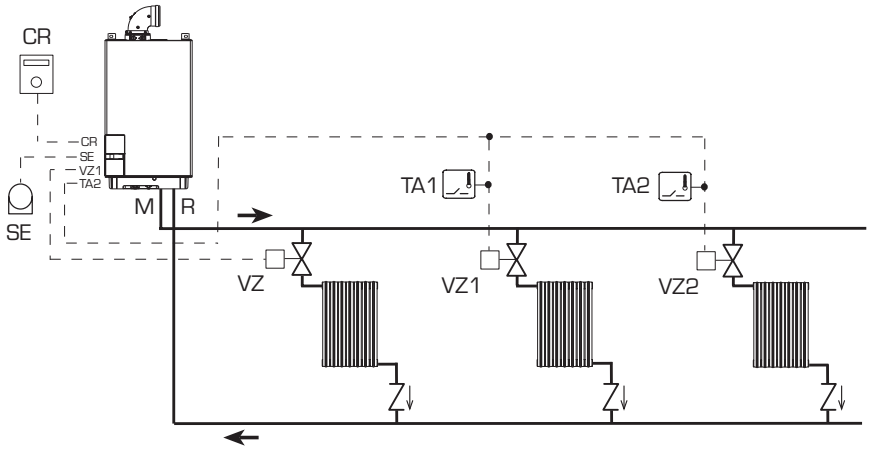

PARAMETER SETTING

To use the remote control (CR) as room reference for a zone, set: **PAR 7 = 1**

Set the opening time of the zone valve VZ: **PAR 33 = "OPENING TIME"**

6 BASIC SYSTEM

MULTI-ZONE SYSTEM WITH PUMP, ROOM THERMOSTAT, REMOTE CONTROL CR 73 (Code 8092226) AND EXTERNAL SENSOR (Code 8094101)

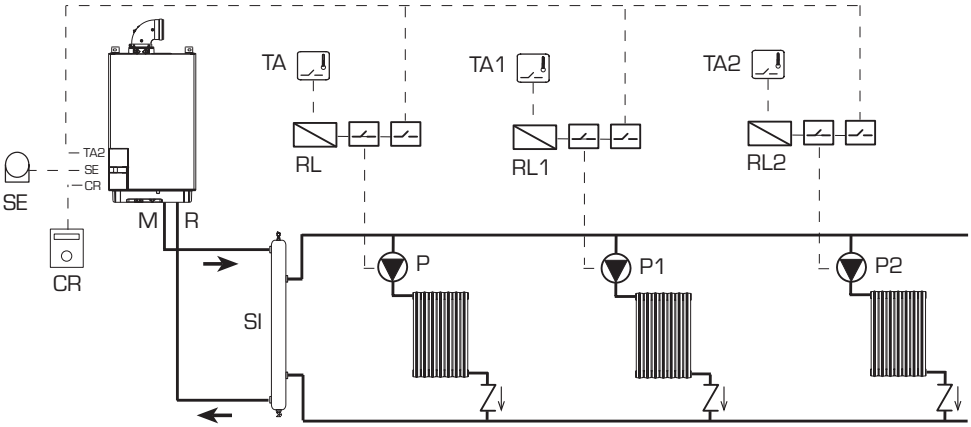

PARAMETER SETTING

To use the remote control (CR) as room reference for a zone, set: **PAR 7 = 1**

7 SYSTEM WITH DOUBLE TEMPERATURE OUTPUT

MULTI-ZONE SYSTEM WITH VALVE, ROOM THERMOSTAT INTERNAL TIME CLOCK AND EXTERNAL SENSOR (Code 8094101)

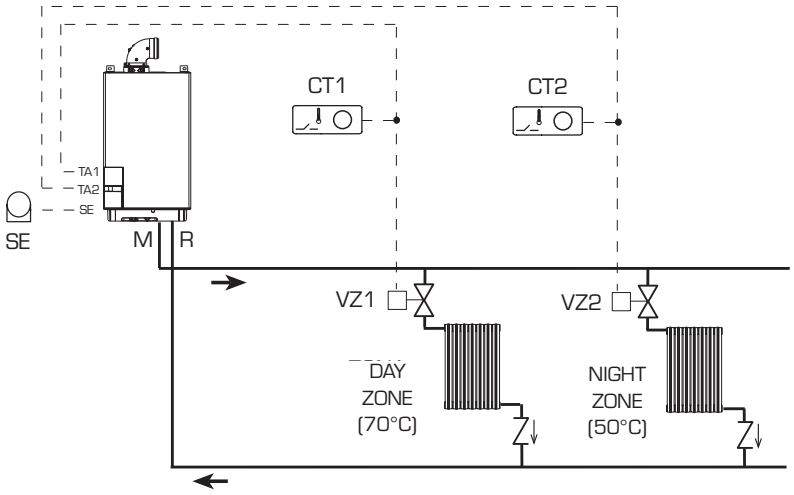

DURING NIGHT TIME THE BOILER USES A LOWER OUTPUT TEMPERATURE IF DIFFERENT TIMES HAVE BEEN SET FOR DAY AND NIGHT AREAS:

- **with external sensor,** set the climatic curve of the day zone 1 with PAR 25 and the night zone at PAR 26.
- **without external sensor,** gain access to setting the day zone 1 by pressing the key and change the value with the keys + and −. Gain access to setting the night zone by pressing the key twice and changing the value with the keys + and −.

8 SYSTEM WITH DOUBLE TEMPERATURE OUTPUT

MULTI-ZONE SYSTEM WITH PUMP, ROOM THERMOSTAT INTERNAL TIME CLOCK AND EXTERNAL SENSOR (Code 8094101)

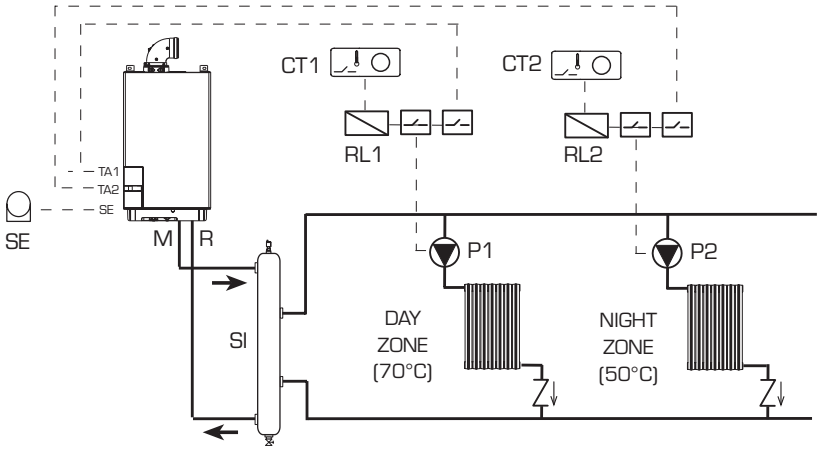

11 SYSTEM WITH MIXER VALVE
SYSTEM WITH ONE DIRECT ZONE AND ONE MIXED ZONE

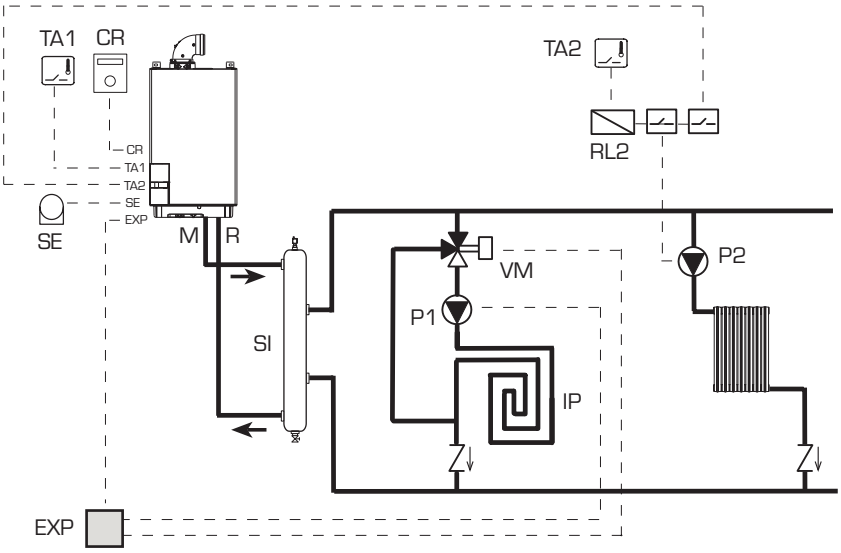

PARAMETERS SETTINGS

To use the remote control (CR) as remote control panel for the boiler rather than as room reference, set:
PAR 7 = 0

12 SYSTEM WITH MIXER VALVE
SYSTEM WITH TWO DIRECT ZONES AND TWO MIXED ZONES

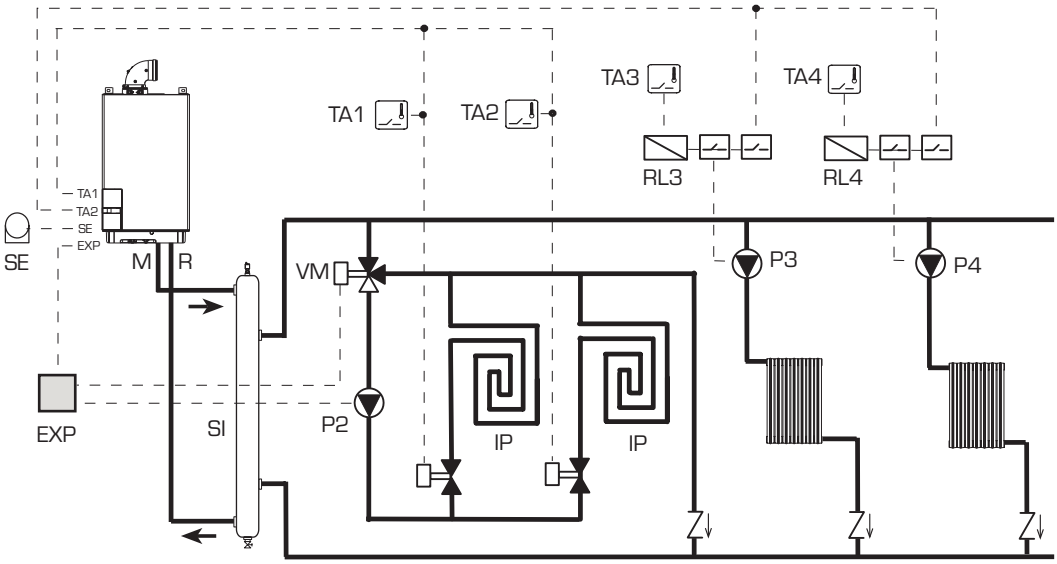

2.9 BOILER ELECTRICAL

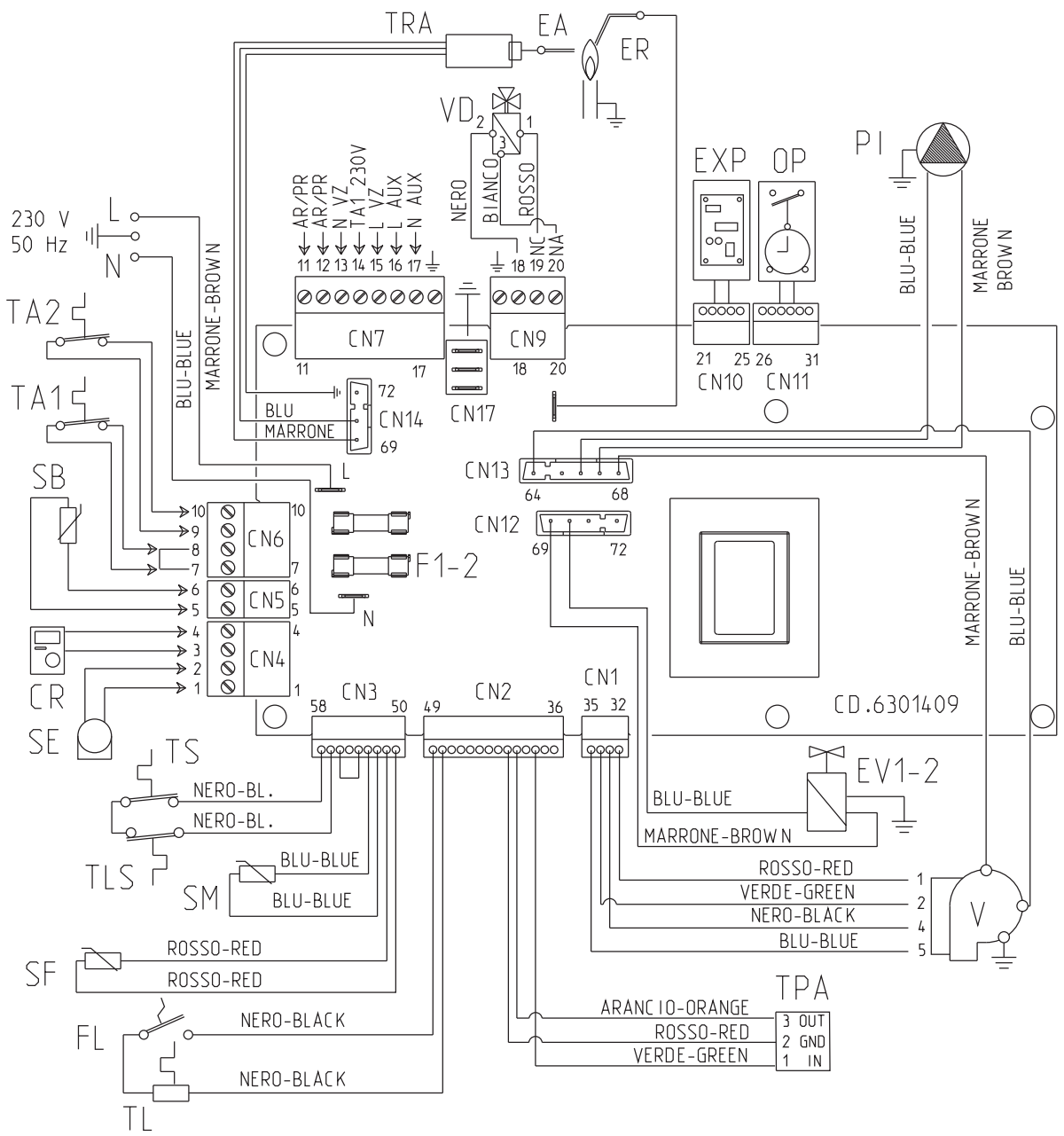

KEY

F1-2	Fuse (4 AT)
TRA	Ignition transformer
PI	Pump
V	Fan
EA	Ignition electrode
ER	Detection electrode
EV1-2	Gas valve coil
TS	Safety thermostat
SF	Exhaust fumes probe
TL	Limit stat
SM	Heating sensor
FL	Water flow switch
VD	Deviator valve
TPA	Pressure transducer
TA1	Zone 1 environment thermostat
TA2	Zone 2 environment thermostat
SB	D.H.W. sensor
CR	Remote control CR 73 (optional)
SE	External sensor (optional)
OP	Programming clock (optional)
EXP	Expansion card
AR/PR	Recirculation pump control or remote alarm
VZ	Zone valve
AUX	Auxiliary connection
TLS	D.H.W. over heating thermostat 85°

NOTE: Connect TA1 to the clamps 7-8 after having removed the bridge.

CONNECTOR SPARE PART CODES:

CN1/CN13	code 6316231
CN2	code 6316233
CN3	code 6316276
CN4	code 6316203
CN5	code 6316200
CN6	code 6316202
CN7	code 6316204
CN9	code 6316201
CN10	cod. 6316227
CN11	cod. 6316226
CN12	code 6299991
CN14	code 6316230

Fig. 11

3 CHARACTERISTICS

3.1 CONTROL PANEL

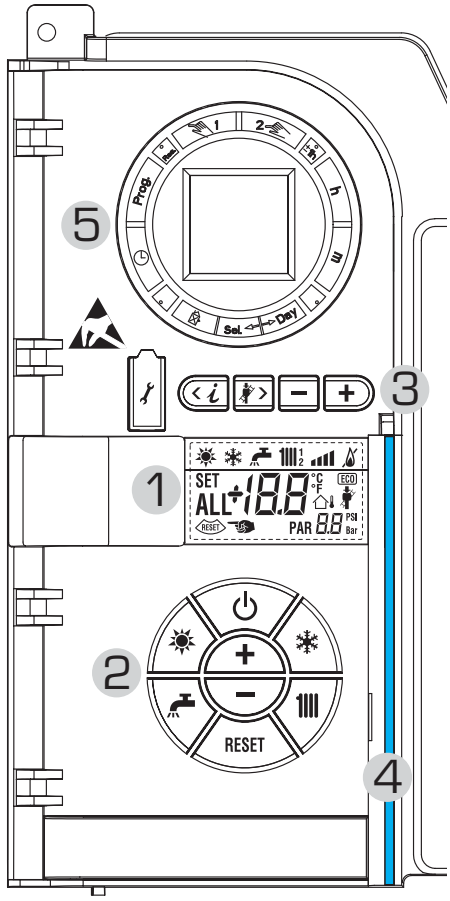

DESCRIPTION OF DISPLAY ICONS

SUMMER MODE ICON

WINTER MODE ICON

D.H.W. MODE ICON

HEATING MODE ICON
1 = First circuit heating system
2 = Second circuit heating system (optional)

GRADED POWER SCALE
The segments of the bar light up in proportion to boiler power output.

BOILER FUNCTIONING AND LOCKOUT ICON

RE-SET REQUIRED

CHIMNEY SWEEP ICON

SECONDARY DIGITS
The boiler visualises the value of the pressure of the system (correct value is between 1 and 1.5 bar)

MAIN DIGITS
The boiler visualises the values set, the state of anomaly and the external temperature

2 - DESCRIPTION OF CONTROLS

ON/STANDBAY
ON = The boiler is on
STANDBAY = The boiler is off, but the protection functions are active.

SUMMER MODE KEY
When this key is pressed, the boiler functions only when D.H.W. is requested.

WINTER MODE KEY
When this key is pressed, the boiler provides heating and D.H.W.

D.H.W. TEMP KEY
When this key is pressed, the temperature of the D.H.W. is shown on the display.

HEATING TEMP KEY
The first time the key is pressed, the temperature of heating circuit 1 is shown.
The second time the key is pressed, the temperature of heating circuit 2 is shown.

RE-SET KEY
Press to reset a resettable error.

INCREASE AND DECREASE KEY
By pressing this key the set value increases or decreases.

3 - KEYS RESERVED FOR THE INSTALLER (access to INST and OEM parameters)

PC CONNECTION
To be used only with the SIME programming kit and only by authorised personnel. Do not connect other electronic devices (cameras, telephones, mp3 players, etc.) Use a tool to remove the cap and reinsert after use.
ATTENTION: Communication port sensitive to electrostatic charges.
Before use, it is advisable to touch an earthed metallic surface to discharge static electricity.

INFORMATION KEY
This key can be pressed several times to view the parameters.

CHIMNEY SWEEP KEY
This key can be pressed several times to view the parameters.

DECREASE KEY
This key changes the default settings.

INCREASE KEY
This key changes the default settings.

4 - LUMINOUS BAR
Blue = Operating normally
Red = operating error

5 - PROGRAMMING CLOCK (optional)
Mechanical clock (code 8092228) or digital clock (code 8092229) to program heating and water supply.

Fig. 12

3.2 ACCESS TO INSTALLER'S INFORMATION

For access to information for the installer, press the key (3 fig. 14). Every time the key is pressed, the display moves to the next item of information. If the key is not pressed, the system automatically quits the function. List of information:

1. Display of external temperature, only with external sensor connected

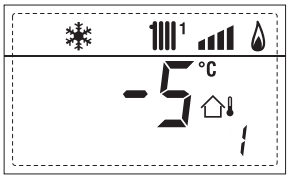

2. Display of heating temperature sensor (SM)

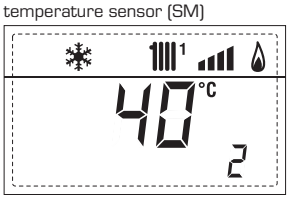

3. Display of D.H.W. temperature sensor (SS)

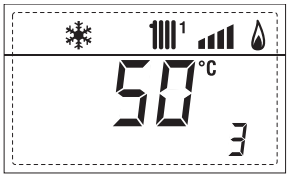

4. Display of auxiliary temperature sensor

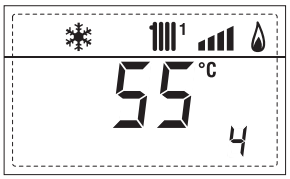

5. Display of smoke temperature sensor

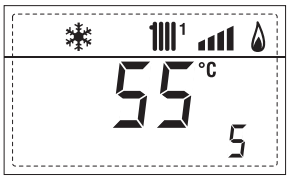

6. Display of heating temperature of first circuit

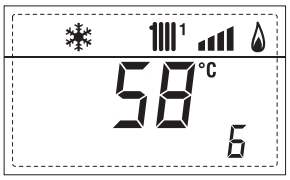

7. Display of heating temperature of second circuit

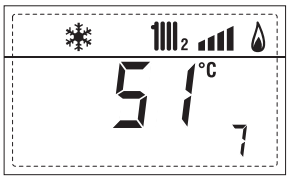

8. Display of ionisation current in μA

9. Display of fan speed in rpm x 100 (eg 4.800 and 1850 rpm)

10. Display of the number of hours x100 the burner has been alight (eg 14000 and 10)

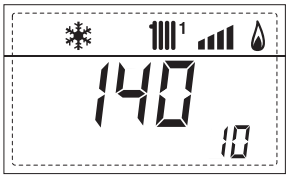

11. Display of number of times the burner has ignited x 1000 (eg 97000 and 500)

12. Display of code of last error

13. Display of code of penultimate error

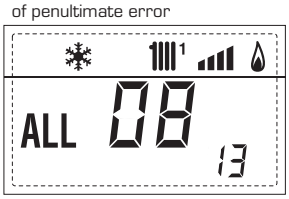

14. Display of total number of errors

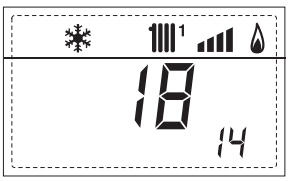

15. Installer parameter access counter (example =140 accesses)

16. OEM access counter (example = 48 accesses)

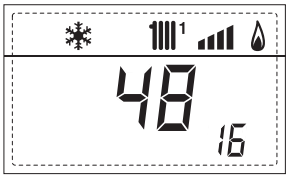

3.3 ACCESS TO INSTALLER'S PARAMETERS

Only qualified persons should alter any of the settings or parameters. Incorrect adjustment would cause defective operation and damage the boiler and would invalidate the warranty.

For access to the installer's parameters, press simultaneously the keys and or 5 seconds (3 fig. 12). For example, the parameter PAR 23 is visualised on the display of the control panel in the following way:

The parameters scroll forwards and backwards with the key and and the default parameters can be changed with the keys and ..

The standard visualisation returns automatically after 60 seconds, or by pressing one of the control keys (2 fig. 12).

3.3.1 Replacement of PCB

Should the PCB be changed, PAR 1 and PAR 2 will require resetting as per the following table.

GAS	MODELS	PAR 1
-	-	**1**
	-	**-**
	-	**-**
	-	**-**
	-	**-**
	-	**-**
	-	**-**
	-	**-**
	-	**-**
	-	**-**
	-	**-**
	-	**19**
METHANE (G20)	25/55 BF	**20**
	30/55 BF	**21**
PROPANE (G31)	25/55 BF	**22**
	30/55 BF	**23**
	-	**24**
	-	**25**
	-	**26**

BOILER	PAR 2
BF	**1**
BF COMBINED WITH SUN-PANEL SYSTEM	**2**
BFT - 25/55 - 30/55	**3**
SYSTEM	**4**
AQUAQUICK	**5**

NOTE: A label on the inside of the clock cover (fig. 19) will show the correct values of PAR 1 and PAR 2 assigned to the boiler."

PARAMETERS INSTALLER

FAST CONFIGURATION

PAR	DESCRIPTION	RANGE	UNIT OF MEASUREMENT	INC/DEC UNIT	DEFAULT SETTING
1	Combustion configuration	– = ND 1 ... 26	=	=	"–"
2	Hydraulic configuration	– = ND 1 ... 5	=	=	"–"
3	Timetable 2 programmer	1 = DHW + Recirc. pump 2 = DHW 3 = Recirculation pump	=	=	1
4	Pressure transducer disabler	0 = Disabled 1 = Enabled	=	=	1
5	Assignment of auxiliary relay AUX (D.H.W. tank)	1 = Remote supply 2 = Recirculation pump	=	=	1
6	Luminous bar indicating presence of voltage	0 = Disabled 1 = Enabled	=	=	1
7	Allocation of CR 73 channels	0 = Not assigned 1 = Circuit 1 2 = Circuits 1 and 2	=	=	1
8	Fan rpm Step ignition	0,0 ... 81	rpmx100	**0,1** da 0,1 a 19,9 **1** da 20 a 81	0,0
9	Long chimneys	0 ... 20	%	1	0
10	Remote control option setting	1 = CR 73 2 = CR 53 3 = RVS	=	=	1
11	Correction values external sensor	-5 ... +5	°C	1	0

SANITARY WATER - HEATING

PAR	DESCRIPTION	RANGE	UNIT OF MEASUREMENT	INC/DEC UNIT	DEFAULT SETTING
20	D.H.W. minimum temperature	10 °C ... PAR 21	°C	1	30
21	D.H.W maximum temperature	PAR 20 ... PAR 62 OEM	°C	1	60
22	Anti-legionella (only D.H.W. tank)	0 = Disabled 1 = Enabled	=	=	0
23	Boiler antifreeze	- 5 ... +5	°C	1	3
24	External sensor antifreeze	- 15 ... +5	°C	1	- 2
25	Climatic curve setting Zone 1	3 ... 40	=	1	20
26	Climatic curve setting Zone 2	3 ... 40	=	1	20
27	Minimum temperature Zone 1	PAR 64 OEM ... PAR 28	°C	1	20
28	Minimum temperature Zone 2	PAR 27 ... PAR 65 OEM	°C	1	80
29	Minimum temperature Zone 2	PAR 64 OEM ... PAR 30	°C	1	20
30	Maximum temperature Zone 2	PAR 29 ... PAR 65 OEM	°C	1	80
31	Maximum heating power	30 ... 100	%	1	100
32	Post-circulation temperature	0 ... 199	Sec.	10	30
33	Pump activation delay Zone 1	0 ... 199	10 sec.	1	1
34	Re-ignition delay	0 ... 10	Min.	1	3

EXPANSION CHART

PAR	DESCRIPTION	RANGE	UNIT OF MEASUREMENT	INC/DEC UNIT	DEFAULT SETTING
40	Assignment to mixed zones	1 = Zone 1 2 = Zone 2	=	=	1
41	Mix valve stroke time	0 ... 199	10 sec.	1	12
42	Priority D.H.W. over mixed zone	0 = Paralle 1 = Absolute	=	=	1
43	Floor drying	0 = No activated 1 = Curve A 2 = Curve B 3 = Curve A+B	=	=	0

RE-SET

PAR	DESCRIPTION	RANGE	UNIT OF MEASUREMENT	INC/DEC UNIT	DEFAULT SETTING
49	Reset default parameters (PAR 01 - PAR 02 = "-")	– , 1	=	=	=

3.4 EXTERNAL SENSOR

If there is an external sensor, the heating settings SET can be taken from the climatic curves according to the external temperature and, in any case, limited to with the range values described in point 3.3 (parameters PAR 25 for zone 1 and PAR 26 for zone 2).
The climatic curve to be set can be selected from a value of 3 and 40 (at step 1).
Increasing the steepness of the curves of fig. 13 will increase the output temperature as the external temperature decreases.

3.5 CARD FUNCTIONING

The electronic card has the following functions:

- Antifreeze protection of the heating and D.H.W. circuits (ICE).
- Ignition and flame detection system.
- Control panel setting for the power and the gas for boiler functioning.
- Anti-block for the pump which is fed for a few seconds after 24 hours of inactivity.
- Antifreeze protection for boilers with D.H.W. storage tank.
- Chimney sweep function which can be activated from the control panel.
- Temperature which can be shifted with the external sensor connected.
  It can be set from the control panel and is active on the heating systems of both circuit 1 and circuit 2.
- Management of two independent heating circuit systems.
- Automatic regulation of the ignition power and maximum heating.
  Adjustments are managed automatically by the electronic card to guarantee maximum flexibility in use of the system.
- Interface with the following electronic systems: climatic regulator CR 53, remote control CR 73, thermal regulator RVS and connected to a management card of a mixed zone code 8092233.

  NOTE: If using CR 53 or RVS set parameter 10 to 2 (PAR 10 = 2).

3.6 TEMPERATURE DETECTION SENSOR

Table 4 gives the values of the electrical element (Ω) obtained on the DHW and exhaust fumes sensors according to the variations in temperature.

When the heating sensor (SM) and fumes sensor (SF) is interrupted, the boiler will not function.

With the D.H.W. sensor (SB) interrupted the boyler, will function in the CH mode only.

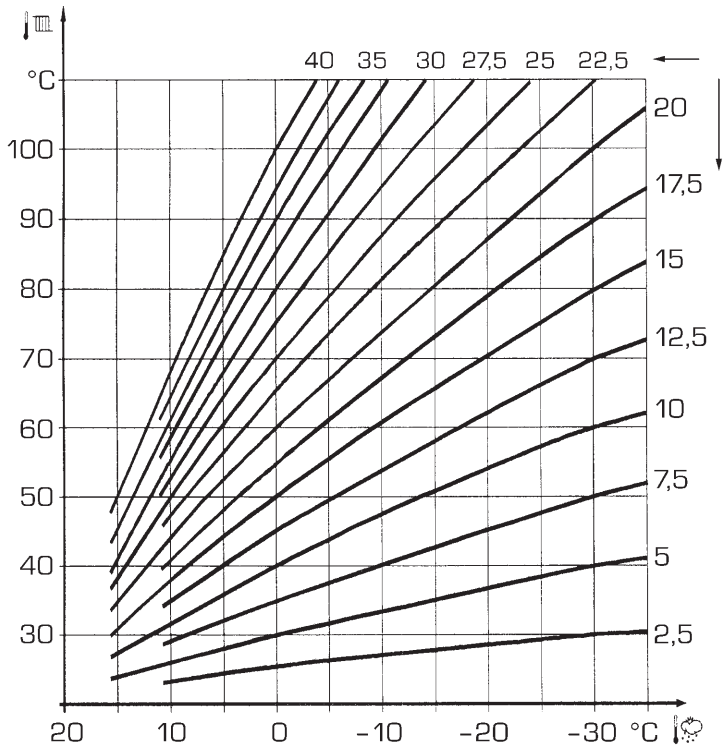

ATTENTION: curves are calculated at an ambient temperature of 20°C. It is however possible to use the boiler controls to change them by ±5°C.

Fig. 13

TABLE 4

Temperature (°C)	Resistance (Ω)
20	12.090
30	8.313
40	5.828
50	4.161
60	3.021
70	2.229
80	1.669

3.7.1 Functioning cycle

Burner ignition should occur within 10 seconds of the opening of the gas valve. If after three attempts the ignition is not detected the boiler will lockout (ALL 06):

- **Lack of gas**
  The ignition electrode will discharge for a maximum of 10 seconds. If after three attempts the ignition is not detected the boiler will lockout (ALL 06). This can happen the first time a boiler is switched on, or after long periods of inactivity. It can also be caused by a closed gas cock or a gas valve not operating.

- **No ionisation**
  The boiler will spark for 10 seconds, if after 3 attempts the ionisation is not detected, the boiler will lockout (ALL 06).
  This could be due to a poor connection or break in the ionisation cable. Check also that the cable is not shorted, badly worn or distorted.

In the case of a sudden lack of voltage, the burner will immediately switch off.
When voltage returns, the boiler will auto-

matically start up again.

3.8 WATER FLOW SWITCH

The water flow gauge (4 fig. 3) intervenes, blocking burner operation in the case of low pressure or pump failure.
NB: when replacing the flow meter valve, ensure that the arrow printed on its body is pointing in the same direction the water flow.

3.9 HEAD AVAILABLE TO SYSTEM

Residual head for the heating system is shown as a function of rate of flow in the graph in fig. 14.

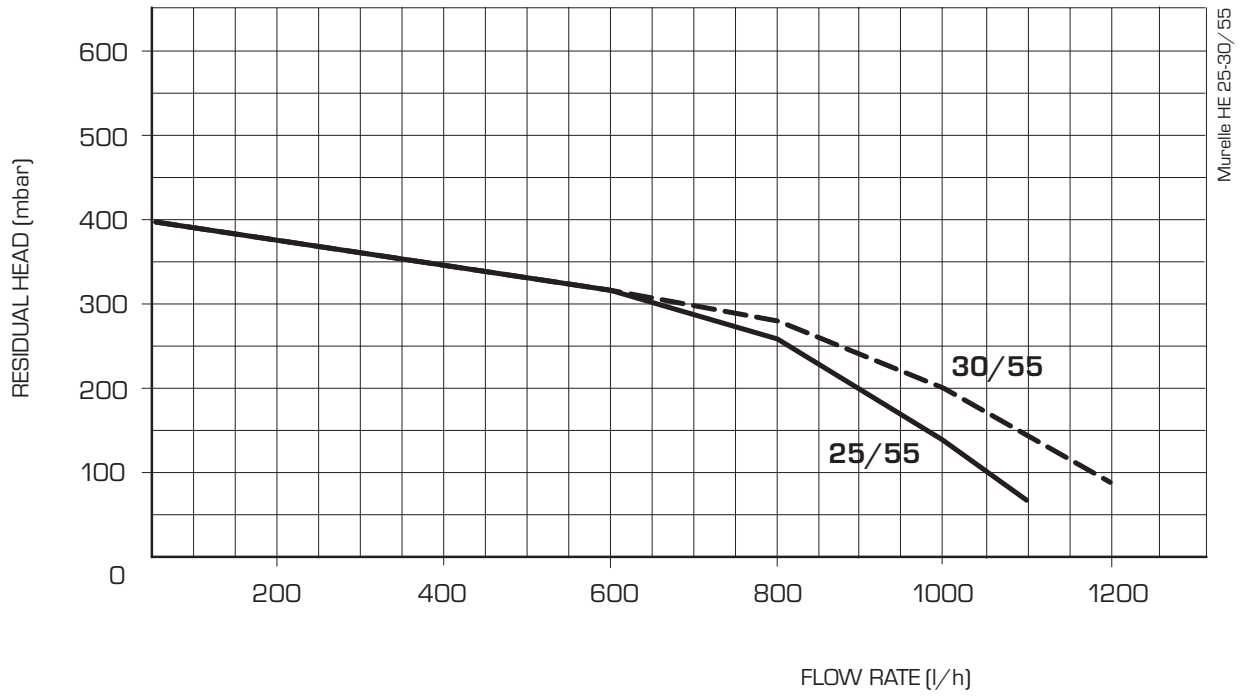

Fig. 14

4 USE AND MAINTENANCE

4.1 D.H.W. PRODUCTION

Domestic hot water is provided via the internal storage cylinder. This cylinder is fitted with a sacrificial magnesium anode.

The magnesium anode must be checked regularly , at least annually and replaced when required.failure to replace when required will result in internal damage to the cylinder and void the warranty.
See section 6.15 regarding checking and replacement of the anode.

4.2 GAS VALVE

The boiler is supplied as standard with a gas valve, model SIT 848 SIGMA (Fig. 16).

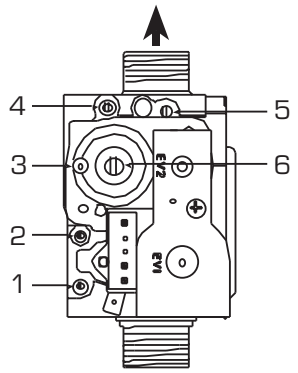

KEY
1 Upstream pressure intake
2 Intermediate pressure intake
3 Air signal inlet (VENT)
4 Downstream pressure intake
5 Capacity step
6 OFF-SET

Fig. 16

4.3 GAS CONVERSION (fig. 17)

This operation must be performed by authorised personnel using original Sime components.
To convert from natural gas to LPG or vice versa, perform the following operations
- Close the gas cock.
- Replace the nozzle (1) and the gasket (2) using those supplied in the conversion kit.
- Test all the gas connection using leak detection fluid. Do not use open flames.
- Apply the nameplate with the new gas flow layout.
- Calibrate the maximum and minimum pressures of the gas valve following the instructions provided in paragraph 4.3.2.

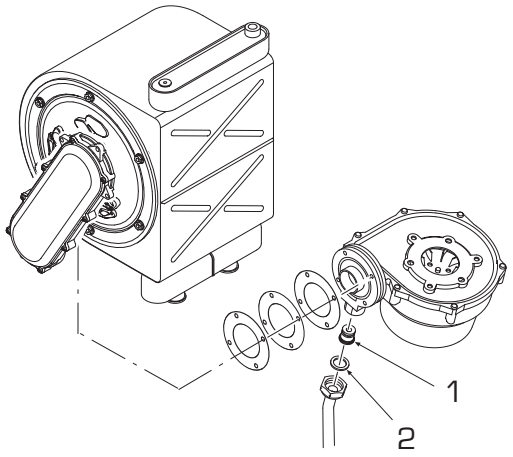

Fig. 17

4.3.1 New fuel configuration

For access to the installer's parameters, press simultaneously keys and for 5 seconds (3 fig. 12). Scroll though the parameters using the and buttons. The parameters will scroll up and down with the keys and . The display pane will show the values of the parameter PAR 1. If the boiler is a **25/55 BF** methane (G20) model, SET 20 will be displayed:
To change the fuel to propane (G31), it is

necessary to set SET 22, by pressing the key .
The standard display will automatically return after 10 seconds.

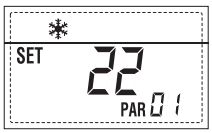

The table below shows the SET settings to enter when the type of gas fuel is changed.

GAS	MODELS	PAR 1
-	-	1
	-	-
	-	-
	-	-
	-	-
	-	-
	-	-
	-	-
	-	-
	-	-
	-	-
	-	19
METHANE (G20)	25/55 BF	20
	30/55 BF	21
PROPANE (G31)	25/55 BF	22
	30/55 BF	23
	-	24
	-	25
	-	26

4.3.2 Calibrating the gas valve pressures

Measure the CO_2 values with a combustion analyzer.

Sequence of operations:
1) Press and hold the button down for a few seconds .

2) Press the button for a few seconds .

3) Identify the CO_2 values at max. power by adjusting the shutter (5 in Fig. 16):

MAX power	
CO_2 (Methane)	CO_2 (Propane)
9,0 ±0,3	10,0 ±0,3

4) Press the button for a few seconds .

5) Identify the CO_2 values at min. power by adjusting the OFF-SET regulation screw (6 in Fig. 16):

MIN power	
CO_2 (Methane)	CO_2 (Propane)
9,0 ±0,3	10,0 ±0,3

6) Press the buttons several times to check the pressures , and change them if required.

7) Press the button once more to quit the function.

4.4 REMOVING THE COVERS

It is possible to completely remove the covers for easier access as shown in fig. 19.
the control panel can be hinged forward after removing the front cover and the retaining screw 3.

4.5 MAINTENANCE

To ensure correct operation and efficiency it is important that the boiler is serviced at annually and that this is recorded in the Benchmark record sheet (page 31).
During the service the condensate drain can be checked. it is important that should the boiler not be used for some time , that the trap is checked and filled if required (see fig. 20).

4.5.1 **Chimney sweep function** (fig. 21)

To check the boiler combustion(CO2) press

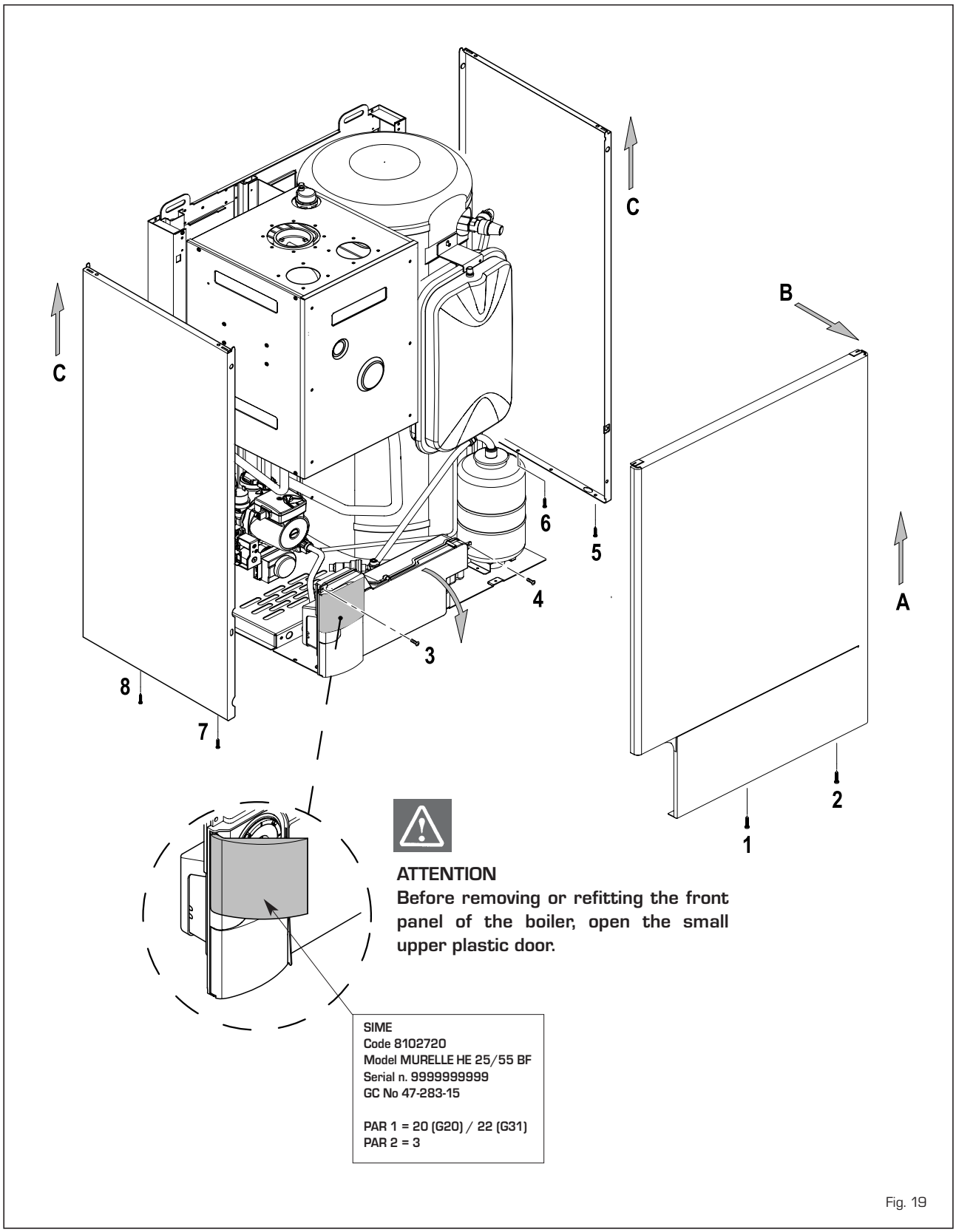

Fig. 19

the Chimney sweep button for a few seconds, the Chimney sweep icon will illuminate. The boiler will ignite and continue for 15 minutes in heating mode.
The burner will turn off at 80 degrees and reignite at 70 degrees.
(Warning! Ensure adequate circulation around heating system before activating the Chimney sweep function).
If the and keys are presses during the 15 minutes the boiler will be brought respectively to max and min output.

The chimney sweep function will automatically cancel after 15 minutes or if the chimney sweep button is pressed again.

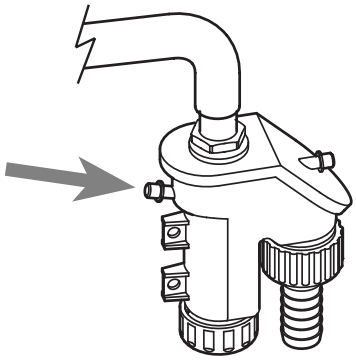

Fig. 20

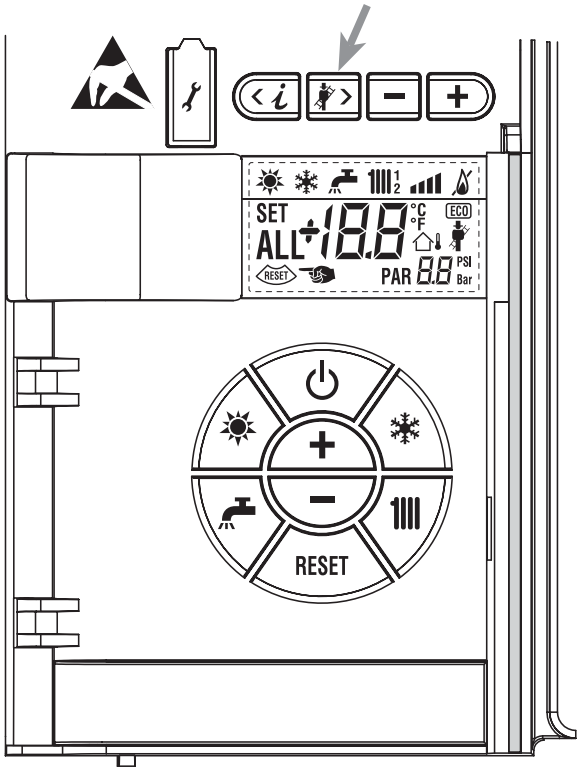

Fig. 21

4.6 FUNCTIONING ERRORS

Where there is a functioning error an alarm appears on the display. **The blue luminous bar may turn red.**
Descriptions of the error are given below:

– **FLUE TEMPERATURE**
ALARM 01 (fig. 23)
Check link on terminals 54-56 at PCB.

Fig. 23

– **LOW SYSTEM PRESSURE**
ALARM 02 (fig. 23/a)
If the system pressure detected by the transducer is lower than 0.5 bar the boiler will stop and display error "ALL 02".
Increase the system pressure to between 1.0 and 1.5 bar using the external filling loop. The boiler will automatically resume operating.

Fig. 23/a

– **HIGH SYSTEM PRESSURE**
ALARM 03 (fig. 23/b)
If the system pressure detected by the transducer is more than 2.8 bar, the boiler will stop and display "ALL 03". Drain water from the system until the pressure is between 1.0 and 1.5 bar. Ensure that the filling loop is disconnected. If the problem persists, seek technical advice.

Fig. 23/b

– **HEATING SENSOR**
ALARM 05 (fig. 23/d)
If the heating sensor (SM) is open or short cicuit, the boiler will stop operating and display "ALL 05".

Fig. 23/d

– **LOCKOUT ALARM 06** (fig. 23/e)
If a flame is not detected after a complete ignition cycle or for any other reason the flame is not detected, the boiler will stop and display "ALL 06".
Press the reset button on the control panel (2) to restart the boiler.
Should the problem persist seek technical help.

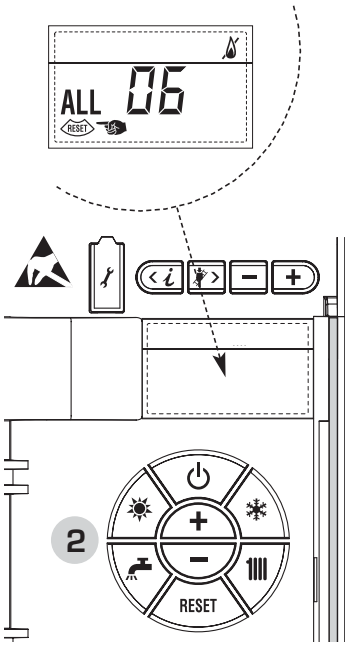

Fig. 23/e

– **SAFETY THERMOSTAT**
ALARM 07 (fig. 23/f)
If either the 100 degree stat or the heat exchanger safety stat open, the burner will turn off. If the stat closes within 1 minute, the boiler will resume operation. If the stat remains open for more than 1 minute the display will show "ALL 07".
Press the reset key on the control panel (2) to restart the boiler.
If the problem persists seek technical advice.

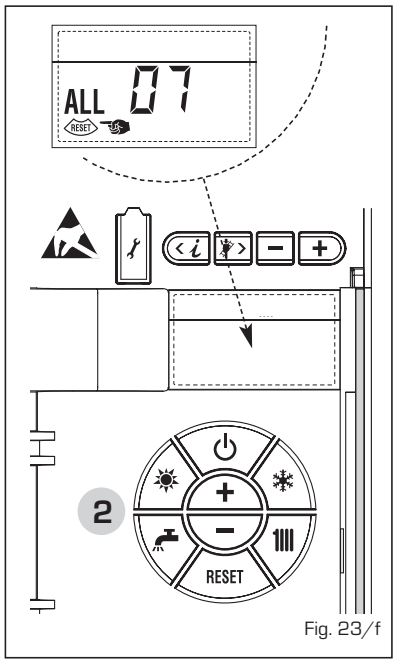

Fig. 23/f

– **FLAME DETECTION**
ERROR 08 (fig. 23/g)
If the flame control detects aflame when one should not be detected, the boiler will stop and display "ALL 08".

Fig. 23/g

– **SYSTEM WATER CIRCULATION**
ERROR 09 (fig. 23/h)
If the system flow switch detects inadequate circulation, the boiler will stop and the display will show "ALL 09". If the error persists for more than 1 minute, the boiler will stop and wait for 6 minu-

Fig. 23/h

tes. The boiler will then attempt to restart. Possible causes of this error are faulty or jammed pump, blocked Aqua Guard filter, closed flow or return valve, blocked heating system.

– **D.H.W. SENSOR ERROR 10** (fig. 23/l)
When the D:H.W. sensor is open or short circuited, the display will show error "ALL 10". The boiler will function in central heating mode only.

Fig. 23/l

– **ACTIVATION OF THE EXHAUST FUMES THERMOSTAT ERROR 13** (Fig. 23/p) (Fig. 23/p)
The activation of this probe causes the boiler to stop and error message "ALL 13" to display.
Press the key RESET of the controls (2) to start up the boiler again.

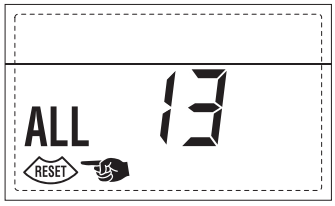

Fig. 23/p

– **EXHAUST FUMES THERMOSTAT ERROR 14** (fig. 23/q)
If the exhaust fumes thermostat is open or short circuit, the boiler will stop and display "ALL 14".

Fig. 23/q

– **FAN ERROR 15** (Fig. 23/r)
If the fan speed is not within the rated speed range,the display will show "ALL 15".
If the problem persists for more than two minutes the boiler will stop thirty minutes, after which it will attempt to resume operating.

Fig. 23/r

ATTENTION: If error "ALL 04" is displayed, the setting of PAR 2 is incorrect. Ensure that PAR2 is set to value 3(see section 3.3.1).

4.7 COMMISSIONING AND ROUTINE SERVICE

Commissioning and servicing can only be done by a qualified engineer.

4.7.1 Commissioning

The gas valve is factory set and should require no adjustment.
Refer to section 4.3.2 "Calibrating the gas valve", to conduct a confirmation check.
The following procedure should be done after installation a gas purge and soundness/drop test have been made.
Ensure that the auto air vent on the pump and on top of the main heat exchanger are opened, turn the electrical supply on.
With the boiler on standby fill the system and pressurise to 1.5 bar.
Ensure that the pump has been manually rotated.
Open the gas Press the " ☀ " the boiler will light and heat the storage cylinder to the desired temperature.
Press the " ❄ ", ensure that any timer or room thermostat are in the on position. The boiler will light and the system will be heated.
Set the controls to the required values as shown in the user guide.
Complete the Benchmark sheet enclosed in this manual.
Explain controls and operation to the user.
Leave all documentation with the user.

4.8 ROUTINE SERVICE

To ensure continued efficient operation of the appliance, it is recommended that it is checked and serviced at regular intervals. The frequency of service will depend on the particular installation and conditions of usage, but in general once a year should be adequate, at this service the magnesium anode must be checked, see section 6.15.
It is the law that a competent person such as a CORGI registered engineer, must carry out any service work.

4.8.1 Combustion Check

Incorporated into the flue elbow or vertical adaptor is a sampling point.
The grey plastic cap should be unscrewed and the flue gas sampled using a flue gas analyser.
During the test the boiler can be operated in "chimney sweep mode" see 4.3.2.
The correct CO_2 reading can be found in section 1.3.

4.8.2 Burner inspection

Remove the burner as described in section 6.4.
Inspect the burner and if necessary clean using a soft brush, taking care not to damage the front insulation.
Check the Ignition/ionisation electrode, check the ignition spark gap (4 mm+/- 0.5 mm).
Check the ionisation electrode, check the distance from the burner (18.7 mm+/- 1 mm).
Before reassembly inspect all seals and replace as required.

4.8.3 Combustion Chamber

Remove any loose debris from the combustion chamber using a soft brush and a vacuum cleaner.
Take care not to damage the rear insulation panel.

4.8.4 Condensate Trap

The condensate trap would not normally require removal during service, but can be checked whilst the burner assembly is removed.
Carefully pour water into the heat exchanger and check that it flows freely to the drain.
Should it require removal, firstly remove the two wire clips securing the condensate drain rubber pipe to the heat exchanger and the condensate trap.
Remove the pipe.

Remove the 1/2" nut securing the condensate trap to the combustion compartment.
Disconnect the drain pipe from the trap.
Clean the trap and refit in reverse order.

4.8.5 Flow Switch

The operation of the flow switch should be checked at each service.
Remove small cover retaining screw and remove the cover.
When the pump is running and water is flowing around the boiler, the actuator lifts releases the micro switch.
Check that the operation of the actuator. Ensure that it is free and that it lifts and returns.
If necessary lubricate the pivot point of the actuator.
Isolate the boiler.
Drain it using the drain provided.
Remove the micro switch by carefully pulling it forward off its mounting pins.
Remove the screw securing the mounting plate, then pull off the plate.
Pull out the actuator pin.
Lubricate the centre "O" ring.
Refit the actuator ensuring that the flat side of the round section is to the bottom.
Re-assemble remaining parts.

benchmark CHECKLIST

Ensure the following is completed after the boiler has been installed and commissioned:-

BOILER SERIAL No. ..... NOTIFICATION No. .....

***CONTROLS** To comply with the Building Regulations, each section must have a tick in one or other of the boxes*

Time & temperature control to heating	room t/stat & programmer/timer	☐	Programmable roomstat	☐
Time & temperature control to hot water	cylinder t/stat & programmer/timer	☐	Combi boiler	☐
Heating zone valves	Fitted	☐	Not required	☐
Hot water zone valves	Fitted	☐	Not required	☐
Thermostatic radiator valves	Fitted	☐		
Automatic by-pass to system	Fitted	☐	Not required	☐

FOR ALL BOILERS CONFIRM THE FOLLOWING:

The system has been flushed in accordance with the boiler manufacturer's instructions? ☐ Yes ☐ No

The system cleaner used .....

The inhibitor used .....

FOR CENTRAL HEATING MODE, MEASURE AND RECORD THE FOLLOWING:

Gas rate	☐ m /hr	☐ ft /hr
Burner operating pressure (if applicable)	☐ N/A	☐ mbar
Central heating flow temperature		☐ °C
Central heating return temperature		☐ °C

FOR COMBINATION BOILERS ONLY

Has a water scale reducer been fitted? ☐ Yes ☐ No

What type of scale reducer has been fitted? .....

FOR DOMESTIC HOT WATER MODE, MEASURE AND RECORD THE FOLLOWING:

Gas rate	☐ m /hr	☐ ft /hr
Maximum burner operating pressure (if applicable)	☐ N/A	☐ mbar
Cold water inlet temperature		☐ °C
Hot water outlet temperature		☐ °C
Water flow rate		☐ lts/min

FOR CONDENSING BOILERS ONLY CONFIRM THE FOLLOWING:

The condensate drain has been installed in accordance with the manufacturer's instructions? ☐ Yes

FOR ALL INSTALLATIONS CONFIRM THE FOLLOWING:

The heating and hot water system complies with current Building Regulations ☐ Yes

The appliance and associated equipment has been installed and commissioned in accordance with the manufacturer's instructions ☐ Yes

If required by the manufacturer, have you recorded a CO/CO_2 ratio reading ☐ N/A ☐ Yes ☐ CO/CO_2 ratio

The operation of the appliance and system controls have been demonstrated to the customer ☐ Yes

The manufacturer's literature has been left with the customer ☐ Yes

COMMISSIONING ENG'S NAME:

Print ..... Gas Safe Register ID No.....

Sign ..... Date .....

SERVICE RECORD

It is recommended that your heating system is serviced regularly and that you complete the appropriate Service Interval Record below.

Service Provider: Before cpmpleting the appropriate Service Interval Record below, please ensure you have carried out the service as described in this instruction manual. Always use the manufacturer's specified spare parts when replacing all controls.

SERVICE 1: Date .....
Engineers Name .....
Company Name .....
Telephone No. .....
Gas Safe Register ID card serial No .....
Comments .....
.....
Signature .....

SERVICE 2: Date .....
Engineers Name .....
Company Name .....
Telephone No. .....
Gas Safe Register ID card serial No .....
Comments .....
.....
Signature .....

SERVICE 3: Date .....
Engineers Name .....
Company Name .....
Telephone No. .....
Gas Safe Register ID card serial No .....
Comments .....
.....
Signature .....

SERVICE 4: Date .....
Engineers Name .....
Company Name .....
Telephone No. .....
Gas Safe Register ID card serial No .....
Comments .....
.....
Signature .....

SERVICE 5: Date .....
Engineers Name .....
Company Name .....
Telephone No. .....
Gas Safe Register ID card serial No .....
Comments .....
.....
Signature .....

SERVICE 6: Date .....
Engineers Name .....
Company Name .....
Telephone No. .....
Gas Safe Register ID card serial No .....
Comments .....
.....
Signature .....

SERVICE 7: Date .....
Engineers Name .....
Company Name .....
Telephone No. .....
Gas Safe Register ID card serial No .....
Comments .....
.....
Signature .....

SERVICE 8: Date .....
Engineers Name .....
Company Name .....
Telephone No. .....
Gas Safe Register ID card serial No .....
Comments .....
.....
Signature .....

SERVICE 9: Date .....
Engineers Name .....
Company Name .....
Telephone No. .....
Gas Safe Register ID card serial No .....
Comments .....
.....
Signature .....

SERVICE 10: Date .....
Engineers Name .....
Company Name .....
Telephone No. .....
Gas Safe Register ID card serial No .....
Comments .....
.....
Signature .....

MAINS PRESSURE HOT WATER STORAGE SYSTEM COMMISSIONING CHECKLIST

This Commissioning Checklist is to be completed in full by the competent person who commissioned the storage system as a means of demonstrating compliance with the appropriate Building Regulations and then handed to the customer to keep for future reference.

Failure to install and commission this equipment to the manufacturer's instructions may invalidate the warranty but does not affect statutory rights.

Customer Name _____ Telephone Number _____

Address _____

Cylinder Make and Model _____

Cylinder Serial Number _____

Commissioned by *(print name)* _____ Registered Operative ID Number _____

Company Name _____ Telephone Number _____

Company Address _____

_____ Commissioning Date _____

To be completed by the customer on receipt of a Building Regulations Compliance Certificate*:

Building Regulations Notification Number *(if applicable)* _____

ALL SYSTEMS PRIMARY SETTINGS (indirect heating only)

Is the primary circuit a sealed or open vented system?	Sealed ☐	Open ☐	
What is the maximum primary flow temperature?		☐	°C

ALL SYSTEMS

What is the incoming static cold water pressure at the inlet to the system?			☐	bar
Has a strainer been cleaned of installation debris (if fitted)?	Yes ☐		No ☐	
Is the installation in a hard water area (above 200ppm)?	Yes ☐		No ☐	
If yes, has a water scale reducer been fitted?	Yes ☐		No ☐	
What type of scale reducer has been fitted?				
What is the hot water thermostat set temperature?			☐	°C
What is the maximum hot water flow rate at set thermostat temperature (measured at high flow outlet)?			☐	l/min
Time and temperature controls have been fitted in compliance with Part L of the Building Regulations?			Yes ☐	
Type of control system (if applicable)	Y Plan ☐	S Plan ☐	Other ☐	
Is the cylinder solar (or other renewable) compatible?	Yes ☐		No ☐	
What is the hot water temperature at the nearest outlet?			☐	°C
All appropriate pipes have been insulated up to 1 metre or the point where they become concealed			Yes ☐	

UNVENTED SYSTEMS ONLY

Where is the pressure reducing valve situated (if fitted)?				
What is the pressure reducing valve setting?			☐	bar
Has a combined temperature and pressure relief valve and expansion valve been fitted and discharge tested?	Yes ☐		No ☐	
The tundish and discharge pipework have been connected and terminated to Part G of the Building Regulations			Yes ☐	
Are all energy sources fitted with a cut out device?	Yes ☐		No ☐	
Has the expansion vessel or internal air space been checked?	Yes ☐		No ☐	

THERMAL STORES ONLY

What store temperature is achievable?	☐	°C
What is the maximum hot water temperature?	☐	°C

ALL INSTALLATIONS

The hot water system complies with the appropriate Building Regulations	Yes ☐	
The system has been installed and commissioned in accordance with the manufacturer's instructions	Yes ☐	
The system controls have been demonstrated to and understood by the customer	Yes ☐	
The manufacturer's literature, including Benchmark Checklist and Service Record, has been explained and left with the customer	Yes ☐	

Commissioning Engineer's Signature _____

Customer's Signature _____

(To confirm satisfactory demonstration and receipt of manufacturer's literature)

*All installations in England and Wales must be notified to Local Authority Building Control (LABC) either directly or through a Competent Persons Scheme. A Building Regulations Compliance Certificate will then be issued to the customer.

benchmark COLLECTIVE MARK
THE MARK OF QUALITY FOR THE INSTALLATION, COMMISSIONING AND SERVICING OF DOMESTIC HEATING AND HOT WATER SYSTEMS

www.centralheating.co.uk

SERVICE RECORD

It is recommended that your hot water system is serviced regularly and that the appropriate Service Record is completed.

Service Provider
Before completing the appropriate Service Record below, please ensure you have carried out the service as described in the manufacturer's instructions.

SERVICE 1 Date
Engineer Name
Company Name
Telephone Number
Comments
Signature

SERVICE 2 Date
Engineer Name
Company Name
Telephone Number
Comments
Signature

SERVICE 3 Date
Engineer Name
Company Name
Telephone Number
Comments
Signature

SERVICE 4 Date
Engineer Name
Company Name
Telephone Number
Comments
Signature

SERVICE 5 Date
Engineer Name
Company Name
Telephone Number
Comments
Signature

SERVICE 6 Date
Engineer Name
Company Name
Telephone Number
Comments
Signature

SERVICE 7 Date
Engineer Name
Company Name
Telephone Number
Comments
Signature

SERVICE 8 Date
Engineer Name
Company Name
Telephone Number
Comments
Signature

SERVICE 9 Date
Engineer Name
Company Name
Telephone Number
Comments
Signature

SERVICE 10 Date
Engineer Name
Company Name
Telephone Number
Comments
Signature

5 FAULT FINDING

If an electrical fault occurs on the appliance the preliminary electrical system checks must be carried out first.
When any service or replacement of electrical components which has required the breaking and re-making of electrical connections has taken place, the following tests must be repeated:

- earth continuity;
- short circuit;
- polarity;
- resistance to earth.

5.1 EARTH CONTINUITY CHECK

Appliances must be electrically disconnected, meter set on Ω (ohm) x 1 scale and adjust zero if necessary. Tests leads from any appliance earth point (e.g. inside control box) see wiring diagrams (section 7) to earth pin on plug.
Resistance should be less than 1 Ω (ohm). If the resistance is greater than 1 Ω (ohm) check all earth wires for continuity and all contacts are clean and tight. If the resistance to earth is still greater than 1 Ω (ohm) then this should be investigated futher.

5.2 SHORT CIRCUIT CHECK

Switches turned FULL ON - meter set on Ω (ohms) x 1 scale. Test leads from L to N on appliance terminal block, if meter reads 0 then there is a short circuit.
Meter set on Ω (ohm) x 100 scale. Repeat it with leads from L to E. If meter reads less than infinity (∞) there is a fault.

NOTE: Should it be found that the fuse has failed but no fault is indicated, a detailed continuity check (i.e. by disconnecting and checking each component) is required to trace the faulty component.
It is possible that a fault could occur as a result of local burning/arcing but no fault could be found under test. However, a detailed visual inspection should reveal evidence of burning around the fault.

5.3 POLARITY CHECK

Appliance reconnected to mains supply and meter set on 300 V ac scale. Test at appliance terminal block.

- Test leads from L to N meter reads approx.: 240 V ac.
- Test leads from L to E " ☀ " meter reads approx. 240 V ac.
- Test leads from N to E " ☀ " meter reads from 0 to 15 V ac.

5.4 RESISTANCE TO EARTH CHECK

Appliance must be disconnected from main supply and meter on Ω (ohm) x 100 scale.
All switches including thermostat on test leads from L to E - if meter reads other than infinity (∞) there is a fault which should be isolated.
A detailed continuity check is required to trace the faulty component.

IMPORTANT:
These series of checks are the first electrical checks to be carried out during a fault finding procedure. On completion of the service/fault finding task which has required the breaking and remaking of electrical connections then the checks 5.1 Earth continuity, 5.3 Polarity and 5.4 Resistance to earth must be repeated.

6 REPLACEMENT OF PARTS

6.1 EXPANSION VESSEL

- Turn off power supply
- Remove boiler cover, see 4.4.
- Isolate flow and return valves
- Drain boiler using fitted drain vent
- Disconnect expansion pipe
- Loosen top fixing screw and remove lower expansion vessel locking nut.
- Remove vessel and transfer the fixing bracket to the new vessel.
- Check new vessel for correct pressure 1- 1.25 bar
- Refit in reverse order.

6.2 IGNITION ELECTRODE

- Turn off power supply
- Remove boiler cover see 4.4
- Remove sealed chamber cover
- Disconnect electrode from ignition transformer
- Pull lead through grommet
- Remove electrode fixing screw
- Carefully remove electrode from burner
- Replace in reverse order.

6.3 IONISATION ELECTRODE

- Turn off power supply
- Remove boiler cover see 4.4
- Remove sealed chamber cover
- Disconnect electrode
- Remove electrode fixing screw
- Carefully remove electrode from burner
- Replace in reverse order

6.4 MAIN BURNER

- Turn off power supply
- Isolate gas supply
- Remove boiler cover
- Remove sealed chamber cover
- Disconnect gas connection at injector
- Disconnect air sensing tube
- Disconnect two plugs to fan
- Remove ignition electrode 6.3
- Disconnect ionisation electrode
- Remove 6 x 10mm nuts securing burner to heat exchanger
- Carefully lift out burner assembly
- Refit in reverse order
- Test for gas tightness.

6.5 FAN ASSEMBLY

- Remove burner assembly as described in 6.4
- Remove 2 x 8mm bolts and loosen 2 x 8mm securing fan to burner assembly
- Remove restrictor plate and fit to new fan
- Refit in reverse order
- Recommission boiler
- Test for gas soundness.

6.6 MAIN HEAT EXCHANGER

- Turn off power supply
- Isolate gas supply
- Isolate flow and return valves
- Drain boiler using drain vent
- Remove burner assembly as described in 6.4
- Remove flue connection
- Disconnect flue sensor
- Disconnect limit stat
- Remove condensate drain connections
- Disconnect flow and return connections
- Remove two fixing brackets
- Lift out heat exchanger
- Refit in reverse order
- Recommission boiler
- Test for gas tightness.

6.7 FLUE SENSOR

- Turn off power supply
- Remove cover
- Remove sealed chamber cover
- Disconnect flue sensor
- Unscrew sensor
- Replace in reverse order.

6.8 100° SAFETY STAT

- Turn off power supply
- Remove cover
- Remove sealed chamber cover
- Disconnect 100° safety stat
- Remove fixing screws
- Refit in reverse order.

6.9 HEATING THERMISTOR (SM SENSOR)

- Turn off power supply
- Remove cover
- Remove sealed chamber cover.
- Isolate flow and return valves
- Drain boiler using drain vent
- Disconnect thermistor
- Unscrew thermistor (catch any water lost)
- Refit in reverse.

6.10 D.H.W. THERMISTOR (SB) SENSOR

- Turn off power supply
- Remove cover see 4.4
- Isolate cold water supply valve
- Drain the cylinder
- Disconnect thermistor
- Unscrew thermistor (catch any water lost)
- Refit in reverse.

6.11 GAS VALVE

- Turn off power supply
- Isolate gas supply
- Remove boiler cover see 4.4
- Disconnect wiring from gas valve
- Disconnect sensing tube
- Remove gas valve
- Refit in reverse order ensuring seals are replaced as required
- Setting the gas valve procedure:
  From the table below identify the boiler type and gas used.
  Connect flue gas analyser.
  Ensure the capacity step shutter (5 fig. 16) to be fully open then switch on the boiler.
  Press and hold the button for a few seconds to light the boiler:
  – Press the button to ensure that the boiler is on its minimum output:
  (A) Adjust the capacity step shutter (5 fig. 6) to achieve the CO_2 value shown in the table.
  (B) Adjust the OFF-SET screw (6 fig. 16) to achieve the CO_2 value shown in the table.
  – Press the button to ensure that the boiler is on its maximum output. Check the CO_2 to be within the values shown in the table, if necessary adjust with the capacity step shutter.
  – Re-check and confirm the settings at minimum and maximum output by pressing and buttons.

NATURAL GAS			
TYPE	MIN		MAX
	(A) CO_2%	**(B)** CO_2%	CO_2%
25/55	9.0 ÷ 9.3	8.6 ÷ 8.9	8.7 ÷ 9.3
30/55	9.2 ÷ 9.4	8.7 ÷ 9.1	8.7 ÷ 9.3

LPG			
TYPE	MIN		MAX
	(A) CO_2%	**(B)** CO_2%	CO_2%
25/55	9.9 ÷ 10.2	9.6 ÷ 9.9	9.6÷10.2
30/55	10.8÷ 11.0	9.7÷ 10.1	9.6÷10.1

- Check for gas tighhtness.

6.12 PRINTED CIRCUIT BOARD (PCB)

- Isolate from power supply
- Remove screw securing control panel
- Lower panel to horizontal position
- Remove PCB covers
- Disconnect all wiring
- Remove PCB fixing screws
- Ensure any PCB links are matched to old board
- Reset PAR 1 and PAR 2 as per the table 3.3.1
- Refit in reverse order
- Recommission boiler.

6.13 PUMP MOTOR

- Turn off power supply
- Remove boiler cover
- Isolate flow and return valves

- Drain boiler using drain vent
- Remove plug connection
- Remove 4 x fixing screws, catch any lost water
- Refit in reverse using new gasket.

6.14 DHW EXPANSION VESSEL

- Turn off power supply
- Remove boiler covers
- Isolate DHW supply
- Drain the cylinder
- Disconnect the DHW expansion vessel
- Check the pressure of the new cylinder (3 bar)
- Refit in reverse order

6.15 SACRIFICIAL MAGNESIUM ANODE

This is located in the base of the cylinder.
- Turn off the power supply
- Turn off the domestic water supply to the boiler.
- Open a DHW tap.
- Connect a suitable drain hose to the cylinder drain cock.
- Open the drain cock.
- When fully drained, remove and examine the anode.
- If required replace the anode.
- Refit in reverse order
- See section 2.4.2 for refilling instructions.

7 EXPLODED VIEWS

COD. **3830035/145** TYPE **MURELLE 25/55 HE BF - 30/55 HE BF** DATE **24.04.2008** PAGE **1/4**

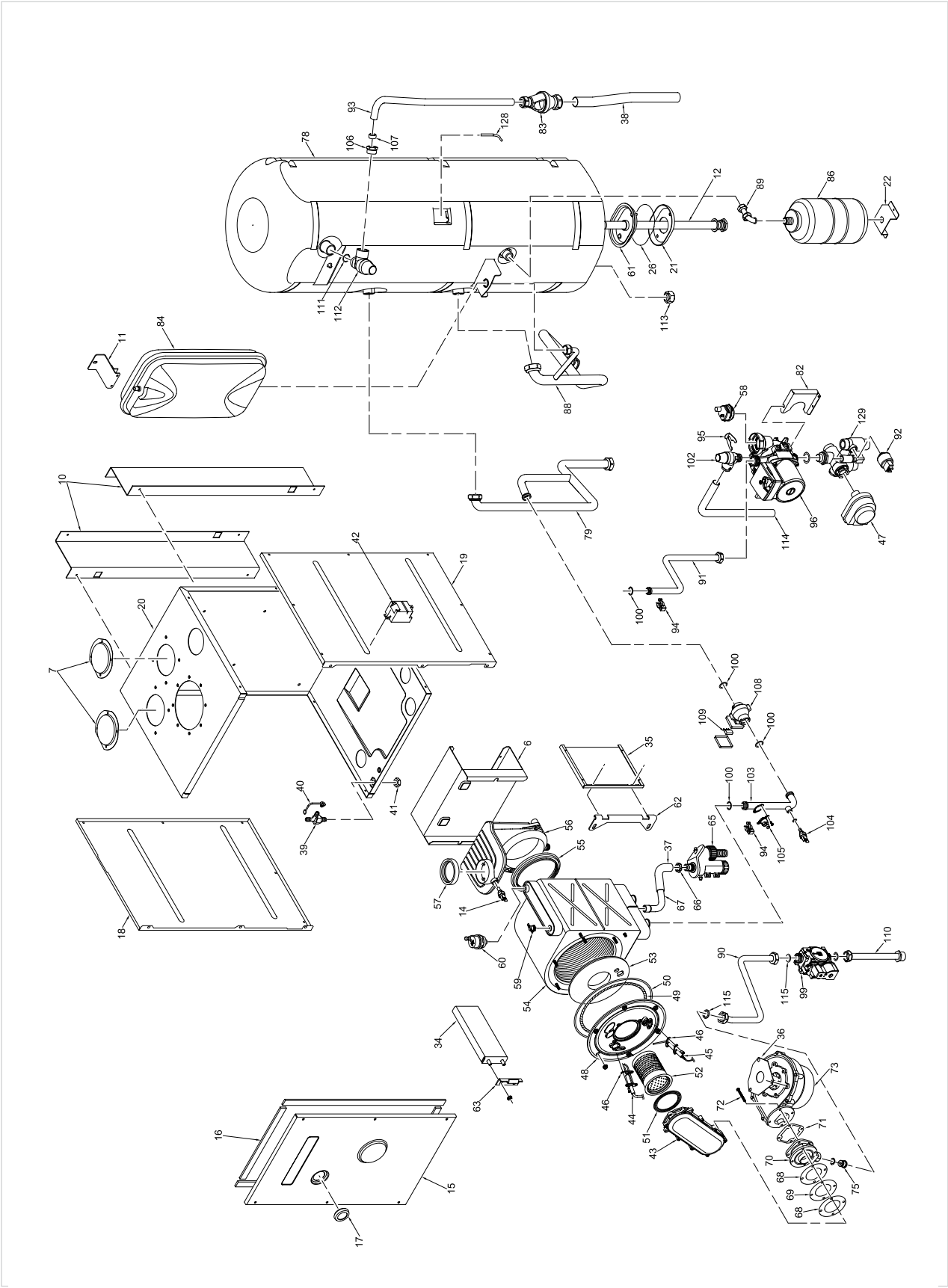

COD. 3830035/145 TYPE MURELLE 25/55 HE BF - 30/55 HE BF DATE 24.04.2008 PAGE 2/4

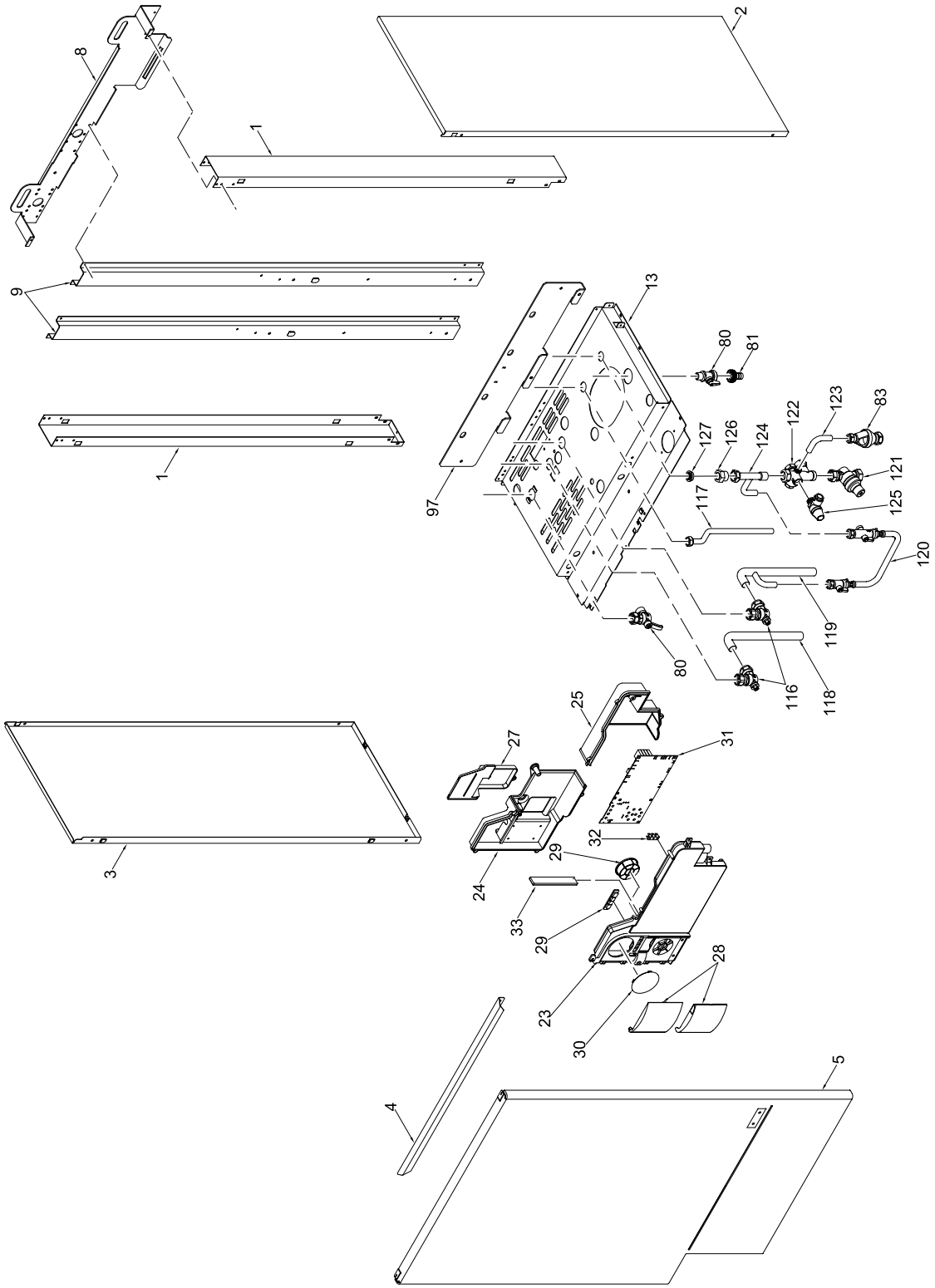

POSITION	CODE	DESCRIPTION	MODEL	NOTE
1	6138558	Right/left hand side frame part		
2	6242117	Casing right hand side panel		
3	6242217	Casing left hand side panel		
4	6072420	Front panel fixing		
5	6304230	Casing front panel		
6	6010810	Smoke chamber fixing panel	25/55	
6 A	6010811	Smoke chamber fixing panel	30/55	
7	6029100	Blind inlet flange		
8	6138711	Frame assembly upper support		
9	6256714	Sealed chamber rear support		
10	6267103	Sealed chamber fixing bracket		
11	6267109	D.H.W. expans. vessel locking bracket		
12	6072708	Magnesium anode + plug 3/4" + OR		
13	6138895	Frame assembly lower side		
14	6277131	Probe NTC D.4X47		
15	6228865	Sealed chamber front panel		
16	• 5192204	Gasket for sealed chamber		
17	6001210	Peephole		
18	6266122	Sealed chamber left hand side panel		
19	6266123	Sealed chamber right hand side panel		
20	6266036	Sealed chamber rear panel	25/55	
20A	6266037	Sealed chamber rear panel	30/55	
21	6258312	D.H.W. cylinder counterflange		
22	6073312	Expansion vessel support		
23	6304700	Control panel		
24	6305000	Cover		
25	6305010	connection cover		
26	6052705	Gasket for D.H.W. cylinder flange		
27	6305020	Time programmer cover		
28	6304890	Flap door assembly		
29	6305120	Kit Rubber button		
30	6247327	Cap for time programmer		
31	6301409	Main PCB		
32	2211610	Earth faston		
33	6305160	Guidelight with led		
34	6010813	Main exchanger L.H. side support		
35	6010815	Main exchanger R.H. side support		
36	6028647	Air diaphragm	25/55 ONLY	

POSITION	CODE	DESCRIPTION	MODEL	NOTE
37	6034151	Condensate drainage pipe		
38	6157635	Tundish drain pipe		
39	6280500	3-ways junct. with press. test nipple		
40	6280550	Cap for 3-ways junction		
41	6146303	Brass Nut 1/8"		
42	6098315	Ignition transformer		
43	6278802	Air-gas hose		
44	6221632	Ignition electrode		
45	• 6221623	Ionisation electrode		
46	• 6174809	Gasket for ignition electrode		
47	6087304	Motor for Honeywell diverting valve		
48	6278852	Main exchanger door		
49	6278968	Glass fibre sealing cord		
50	6278967	Combustion chamber O-ring		
51	• 6174817	Gasket for burner flange		
52	6278308	Premix burner	25/55	
52A	6278309	Premix burner	30/55	
53	6269007	Main exchanger door insulation		
54	• 6278904	Main exchanger body	25/55	
54A	• 6278906	Main exchanger body	30/55	
55	6248856	Smoke chamber/heat exchanger gasket		
56	• 6278701	Smoke chamber		
57	6248851	Smoke chamber outlet gasket		
58	6013181	Automatic air vent		
59	• 6146721	Limit stat		
60	• 6013102	Automatic air vent 1/4"		
61	6258311	D.H.W. cylinder flange		
62	6010812	Main exchanger R.H. fixing bracket		
63	6010814	Main exchanger L.H. fixing bracket		
65	• 6277204	Water trap		
66	6146301	Brass nut 1/2"		
67	6034150	Condensate drainage pipe		
68	6174812	Mixer/hose gasket		
69	6239206	Mixer closing plate		
70	6274306	Air/gas mixer		
71	6174816	Gasket for fan flange		
72	2000507	Screw TE M5x50		
73	6261408	Fan		

• Recommended stock parts - Componenti da tenere a scorta

COD. **3830035/145** TYPE **MURELLE 25/55 HE BF - 30/55 HE BF** DATE **24.04.2008** PAGE **4/4**

POSITION	CODE	DESCRIPTION	MODEL	NOTE
75	6274121	Burner nozzle ø 6,00 natural gas		
75A	6274120	Main burner nozzle Ø 4,40 LPG		
78	5194303	Insulated stainless steel tank 55 l		
79	6216233	C.H. system flow pipe	25/55	
79A	6216234	C.H. system flow pipe	30/55	
80	6179100	Drain cock 3/8"		
81	6179200	Holder complete with locking nut		
82	6073318	Circulating pump fixing bracket		
83	6269405	Tundish		
84	5183722	Rectang. expansion vessel 10 l.		
86	• 6245102	Sanitary D.H.W. tank - 2.5 L.		
88	6216016	D.H.W. cylinder return pipe		
89	6227644	D.H.W. expansion vessel connect. pipe		
90	6277413	Pipe connecting gas valve-mixer		
91	6277928	Pipe connecting pump-exchanger	25/55	
91A	6277929	Pipe connecting pump-exchanger	30/55	
92	• 6273603	Water pressure transducer		
93	6157633	Pressure relief valve drain pipe		
94	• 6226601	Spring for heat exchanger connection		
95	6226621	Pressure relief valve fixing spring		
96	6124818	Circulating pump Grundfos UPS 15-60		
97	6215211	Hanging bracket		
99	6243823	SIT gas valve type		
100	• 6226412	O-ring 3068		
102	6040209	Pressure relief valve		
103	6277713	Main exchanger outlet pipe		
104	• 6231351	Plunged sensor		
105	• 6146701	100°C safety stat		
106	6168401	Locking nut for pipe Ø 15		
107	6100202	Ogive for pipe Ø 15		
108	• 6149303	Flow water switch		
109	• 6131401	Microswitch for flowmeter		
110	6226878	Gas inlet pipe		
111	2030227	Gasket Ø 12x18x2		
112	6029002	Pressure relief valve 1/2" - 7 bar		
113	6229500	Plug 1/2"		
114	6157634	Pressure relief valve drain pipe		
115	2030228	Gasket Ø 17x24x2		

POSITION	CODE	DESCRIPTION	MODEL	NOTE
116	6177502	C.H. flow - C.H. return cock 3/4" MF		
117	6142572	Pipe connecting jig		
118	6142426	C.H. return pipe		
119	6142427	C.H. flow pipe		
120	5199100	Filling Loop		
121	6037580	Water pressure reducer 3/4"		
122	6265850	5 ways water collector		
123	6157628	PRV drain pipe		
124	6157630	Cold water inlet pipe		
125	6040208	Pressure relief valve		
126	6120519	Adapter		
127	6281402	Flow restrictor		
128	6231330	Temperature sensor L=1120		
129	5197002	Brass hydraulic group		
	5197150	Complete control panel		
	5188316	Complete main exchanger	25/55	
	5188317	Complete main exchanger	30/55	
	6316202	Connector 4 poli		
	6316203	Connector 4 poli		
	6316204	Connector 8 poli		
	6316230	3 pole cable connector		
	6299991	4 pole cable connector		
	6316231	5+4 pole cable connector		
	6316232	9 pole cable connector		
	6316233	14 pole cable connector		
	6245339	Divertor valve connector		
	6316200	Connector 2 poli		
	6316201	Connector 4 poli		
	5184815	Valve pack kit		
	• 5185130	Conversion kit to LPG		

Products reference:

8102720 : Murelle HE 25/55 BF
8102722 : Murelle HE 30/55 BF

Check the correspondence with the boiler data plate.

• Recommended stock parts - Componenti da tenere a scorta

Dealing with Condensate

Five suitable drainage points

1. Internal drain stack pipe
2. Waste water pipe *
3. External drain or gully *
4. Rainwater hoppers that carry both rain water and foul water *
5. Purpose-made soakaways

* Care should be taken not to contaminate any "Grey Water Systems"

Pipework

Condensate pipework should be plastic, same as used for standard wastewater plumbing.
Similarly the drainage system where the condensate discharges to should also be resistant to the acidic condensate.
Connection to the internal trap in the boiler can be achieved by using a 20mm solvent weld socket.
Pipework should be kept as short as possible.
External runs should be avoided, but when necessary be a minimum of 3 meters in 32mm diameter pipework and lagged to avoid freezing, this also applies to pipe runs in unheated areas such as garages.
To reduce the possibility of condensate being trapped in the pipe, the number of bends should be kept to a minimum.
Pipework must be angled down from the boiler with a fall of at least 2.5.
The pipework must be supported at a distance of 0.5m for inclined runs and 1.0m for vertical runs.

Condensate traps

Where the condensate drain is not sealed to the discharge connection a trap will be required. The water seal should be 38mm or more for external discharge and 75mm or more for internal discharge. When connecting to a external stack the trap should be located within the building.

Stack Pipes

Condensate connections should be at least 450mm above any bend at the bottom of a stack pipe in a single or multi-story dwelling up to 3 storeys.
There are specific requirements when connecting to a stack pipe serving
multi-storey buildings greater than 3 storeys.
All connections to stack pipes should avoid across flow between other Branch pipes.

Soakaways

Any soakaways have to be purpose-made and located as close to the boiler as possible, but clear of the buildings foundations and any buried services. The best option is to purchase a soakaway from a drainage manufacturer and install it to the manufacturers recommendation.

Cod. 6274270 - 03/09 - Documentation Dpt.

Sime Ltd
1a Blue Ridge Park
Thunderhead Ridge
Glasshoughton, Castleford, WF10 4UA

Customer Service: 0870 9911114
Sales: 0870 9911116
Technical Support: 0870 9911117
Main Fax: 0870 9911115

www.sime.ltd.uk