spares & parts online
IBASIS.co.uk©

UK

# MERIDIAN HE 30 C

## *Installation and servicing instructions*

GAS safe REGISTER
199838

WRAS APPROVED PRODUCT

benchmark COLLECTIVE MARK
THE MARK OF QUALITY FOR THE INSTALLATION, COMMISSIONING AND SERVICING OF DOMESTIC HEATING AND HOT WATER SYSTEMS

**Please read the Important Notice within this guide regarding your boiler warranty**

sime®

**IMPORTANT NOTICE**

For the first year all of our appliances are protected by our manufacturer's guarantee which covers both parts and labour.
As you would expect from Sime Ltd, it is our aim to provide our valued customers with the best in after sales and service.
To take advantage of any extended warranty offered, all you have to do is to adhere to these 3 simple conditions:

- The installation must be carried out to Manufacturers/Benchmark Standards by a Gas Safe Registered Engineer, and recorded in the installation manual.
- The appliance must be registered with both Sime Ltd and Gas Safe within 30 days of installation.
- The appliance must be serviced annually, by either Sime Ltd or a Gas Safe registered engineer- ensuring that the Benchmark service record in the installation manual is completed.

Failure to comply with the above will result in only the 12 month warranty being offered.
In the absence of any proof of purchase, the 12 month warranty period will commence from the date of manufacture of the boiler as shown on the appliance data plate.

## SAFE HANDLING

This boiler may require 2 or more operatives to move it into its installation site, remove it from its packaging and during movement into its installation location. Manoeuvring the boiler may include the use of a sack truck and involve lifting pushing and pulling.
Caution should be exercised during these operations.

Operatives should be knowledgeable in handling techniques when performing these tasks and the following precautions should be considered:
- Grip the boiler at the base
- Be physically capable
- Use personal protective equipment as appropriate e.g. gloves, safety footwear.

During all manoeuvres and handling actions, every attempt should be made to ensure the following unless unavoidable and/or the weight is light.
- Keep back straight
- Avoid twisting at the waist
- Always grip with the palm of the hand
- Keep load as close to the body as possible
- Always use assistance

**WARNING**
Caution should be exercised when performing any work on this appliance.
Protective gloves and safety glasses are recommended.
- Avoid direct contact with sharp edges.
- Avoid contact with any hot surfaces.

**NOTICE**
Please be aware that due to the wet testing of the appliance, there may some residual water in the hydraulic circuit.
- Protect any surfaces, carpets or floorings.
- Use a suitable container to catch any water that escape when removing the protective caps from the connections.

All descriptions and illustrations provided in this manual have been carefully prepared but we reserve the right to make changes and improvements in our products that may affect the accuracy of the information contained in this manual.

# Code Of Practice

For the installation, commissioning and servicing of domestic heating and hot water products

Benchmark places responsibilities on both manufacturers and installers.* The purpose is to ensure that customers** are provided with the correct equipment for their needs, that it is installed, commissioned and serviced in accordance with the manufacturer's instructions by competent persons and that it meets the requirements of the appropriate Building Regulations. Installers are required to carry out work in accordance with the following:

## Standards of Work

- Be competent and qualified to undertake the work required.
- Install, commission, service and use products in accordance with the manufacturer's instructions provided.
- Ensure that where there is responsibility for design work, the installation is correctly sized and fit for purpose.
- Meet the requirements of the appropriate Building Regulations. Where this involves notifiable work be a member of a Competent Persons Scheme or confirm that the customer has notified Local Authority Building Control (LABC), prior to work commencing.
- Complete all relevant sections of the Benchmark Checklist/Service Record when carrying out commissioning or servicing of a product or system.
- Ensure that the product or system is left in a safe condition and, whenever possible, in good working order.
- Highlight to the customer any remedial or improvement work identified during the course of commissioning or servicing work.
- Refer to the manufacturer's helpline where assistance is needed.
- Report product faults and concerns to the manufacturer in a timely manner.

## Customer Service

- Show the customer any identity card that is relevant to the work being carried out prior to commencement or on request.
- Give a full and clear explanation/demonstration of the product or system and its operation to the customer.
- Hand over the manufacturer's instructions, including the Benchmark Checklist, to the customer on completion of an installation.
- Obtain the customer's signature, on the Benchmark Checklist, to confirm satisfactory demonstration and receipt of manufacturer's instructions.
- Advise the customer that regular product servicing is needed, in line with manufacturers' recommendations, to ensure that safety and efficiency is maintained.
- Respond promptly to calls from a customer following completion of work, providing advice and assistance by phone and, if necessary, visiting the customer.
- Rectify any installation problems at no cost to the customer during the installer's guarantee period.

benchmark COLLECTIVE MARK
THE MARK OF QUALITY FOR THE INSTALLATION, COMMISSIONING AND SERVICING OF DOMESTIC HEATING AND HOT WATER SYSTEMS

*The use of the word "installer" is not limited to installation itself and covers those carrying out installation, commissioning and/or servicing of heating and hot water products, or the use of supporting products (such as water treatment or test equipment).
**Customer includes householders, landlords and tenants.

© Heating and Hotwater Industry Council (HHIC)

## The Benchmark Scheme

Sime Ltd is a licensed member of the Benchmark Scheme which aims to improve the standards of installation and commissioning of domestic heating and hot water systems in the UK and to encourage regular servicing to optimise safety, efficiency and performance.

Benchmark is managed and promoted by the Heating and Hotwater Industry Council.

For more information visit **www.centralheating.co.uk**

CE IPX4D

***Meridian HE 30 C:*** *Gas Council number 47-283-46*

## *These appliances comply with the S.E.D.B.U.K. scheme, band "A"*

**CONTENTS**


| | | |
|---|---|---|
| 1 | **DESCRIPTION OF THE BOILER** | pag. 6 |
| 2 | **INSTALLATION** | pag. 10 |
| 3 | **CHARACTERISTICS** | pag. 17 |
| 4 | **USE, MAINTENANCE (including BENCHMARK) AND COMMISSIONING** | pag. 21 |
| 5 | **FAULT FINDING** | pag. 27 |
| 6 | **REPLACEMENT OF PARTS** | pag. 27 |
| 7 | **EXPLODED VIEWS** | pag. 30 |
| 8 | **APPENDIX 1 (GUIDANCE HHIC)** | pag. 35 |
| 9 | **APPENDIX 2** | pag. 47 |


**Important Information**
IT IS A STATUTORY REQUIREMENT THAT ALL GAS APPLIANCES ARE INSTALLED BY COMPETENT PERSONS, IN ACCORDANCE WITH THE GAS SAFETY (INSTALLATION AND USE) REGULATIONS (CURRENT EDITION). The manufacturer's instructions must not be taken as overriding any statutory requirements, and failure to comply with these regulations may lead to prosecution.

No modifications to the appliance should be made unless they are fully approved by the manufacturer.

**GAS LEAKS:** DO NOT OPERATE ANY ELECTRICAL SWITCH, OR USE A NAKED FLAME. TURN OFF THE GAS SUPPLY AND VENTILATE THE AREA BY OPENING DOORS AND WINDOWS CONTACT THE GAS EMERGENCY SERVICE ON 0800111999.

benchmark
COLLECTIVE MARK
THE MARK OF QUALITY FOR THE INSTALLATION, COMMISSIONING AND SERVICING OF DOMESTIC HEATING AND HOT WATER SYSTEMS

Please refer to commissioning instructions for filling in the checklist at the back of this installation guide.
Note: All Gas Safe registered installers carry a ID Card.
You can check your installer is Gas Safe Registered by calling 0800 408 5577

## SIME COMBINATION BOILERS
## Installer checklist

Please remember to carry out the following checks after installation. This will achieve complete customer satisfaction, and avoid unnecessary service calls. A charge will be made for a service visit where the fault is not due to a manufacturing defect.

- Has a correct by-pass been fitted and adjusted?
- Has the system and boiler been flushed?
- Is the system and boiler full of water, and the correct pressure showing on the pressure gauge?
- Is the Auto Air Vent open?
- **Has the pump been rotated manually?**
- Is the gas supply working pressure correct?
- Is the boiler wired correctly? (See installation manual).
- Has the customer been fully advised on the correct use of the boiler, system and controls?
- Has the Benchmark Checklist in the use and maintenance section of this manual, been completed ?

# 1 DESCRIPTION OF THE BOILER

## 1.1 INTRODUCTION

**MERIDIAN HE 30 C** are premixed gas condensation thermal modules that employ a microprocessor-based technology to control and manage all the functions. All modules are compliant with European Directives 2009/142/CE, 2004/108/CE, 2006/95/CE and 92/42/CE. For optimum installation and operation, always follow the instructions provided in this manual. The products manufactured and sold by Sime do not contain any banned materials or substances (ie they comply with ISO9000:2000).

## 1.2 DIMENSIONS (fig. 1)

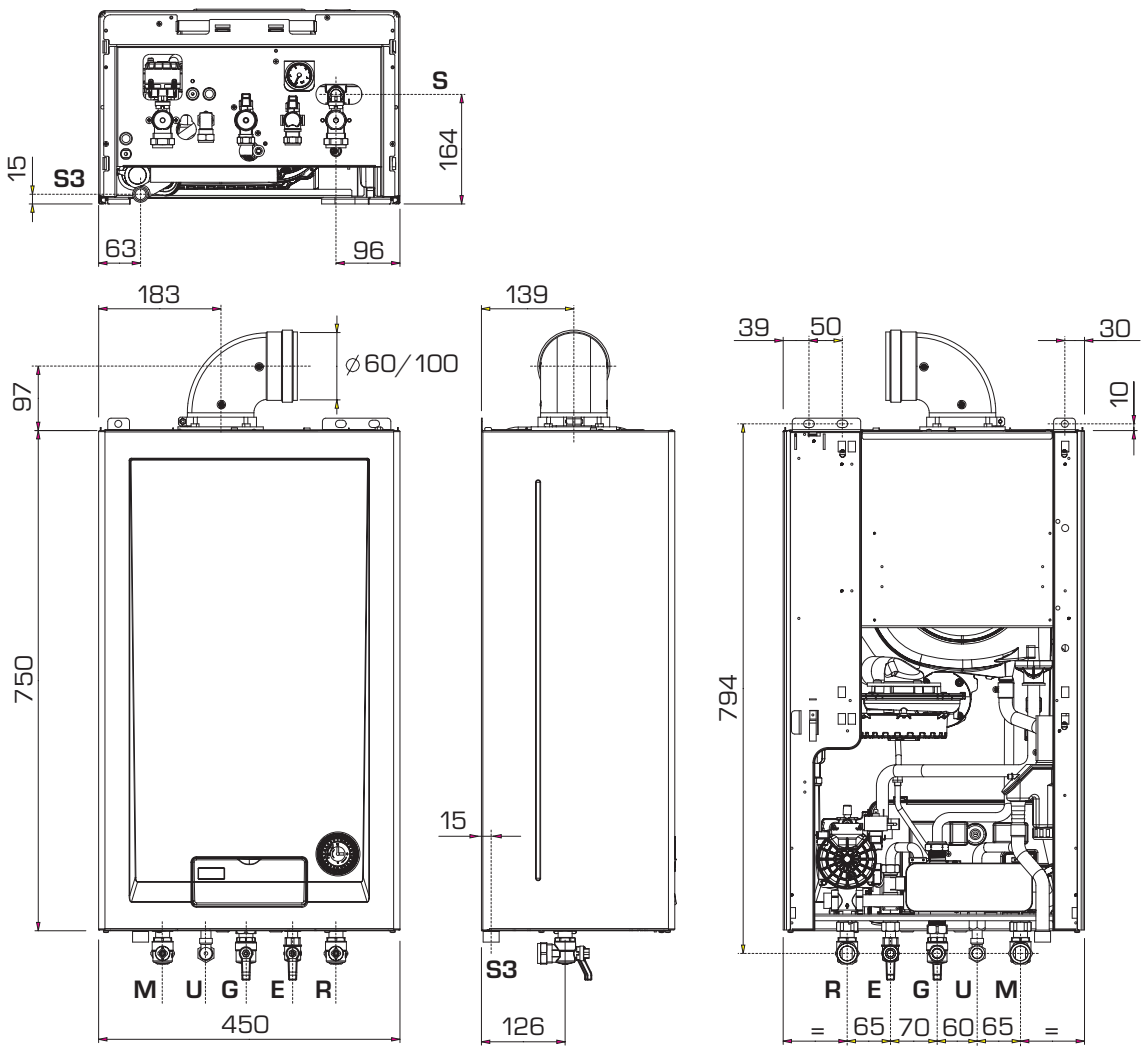


Fig. 1

**TABLE 1 - Connections**

| | | | |
|---|---|---|---|
| **R** | **C.H. return** | 22 mm | Compression |
| **M** | **C.H. flow** | 22 mm | Compression |
| **G** | **Gas connection** | 15 mm | Compression |
| **E** | **D.H.W. inlet** | 15 mm | Compression |
| **U** | **D.H.W. outlet** | 15 mm | Compression |
| **S3** | **Condensation outlet ø 20** | | |
| **S** | **Safety valve discharge** | | |

**TABLE 2 - Minimum clearances**

| | **For servicing** |
|---|---|
| **ABOVE THE APPLIANCE CASING** | 200 mm |
| **AT THE R.H.S.** | 15 mm |
| **AT THE L.H.S.** | 15 mm |
| **BELOW THE APPLIANCE CASING** | 200 mm |
| **IN FRONT OF THE APPLIANCE** | 500 mm |

## 1.3 TECHNICAL FEATURES

| MERIDIAN HE | | 30 C |
|---|---|---|
| **Heat output** | | |
| Nominal (80-60°C) | kW | 28.9 |
| Nominal (50-30°C) | kW | 31.6 |
| Reduced G20 (80-60°C) | kW | 5.9 |
| Reduced G20 (50-30°C) | kW | 6.6 |
| Reduced G31 (80-60°C) | kW | 7.6 |
| Reduced G31 (50-30°C) | kW | 8.5 |
| **Heat input nominal** | kW | 29.5 |
| **Heat input reduced G20/G31** | kW | 6.2/8.0 |
| **Max/min useful yield (80-60°C)** | % | 98.0/95.1 |
| **Max/min useful yield (50-30°C)** | % | 107.1/106.4 |
| **Useful yield at 30% of the load (40-30°C)** | % | 107.0 |
| **Termal efficiency (CEE 92/42 directive)** | | ★★★★ |
| **Losses after shutdown to 50°C (EN 483)** | W | 89 |
| **Supply voltage** | V-Hz | 230-50 |
| **Adsorbed power consumption** | W | 115 |
| **Electrical protection grade** | IP | X4D |
| **C.H. setting range** | °C | 20/80 |
| **Water content boiler** | l | 4.60 |
| **Maximum water head** | bar | 3.0 |
| **Maximum temperature** | °C | 85 |
| **Capacity of the heating expansion vessel** | l | 8 |
| **Pressure of the heating expansion vessel** | bar | 1.0 |
| **D.H.W. setting range** | °C | 10/60 |
| **D.H.W. flow rate (EN 625)** | l/min | 13.4 |
| **Continuous D.H.W. flow rate $\Delta$t 30°C** | l/min | 14.4 |
| **Minimum D.H.W. flow rate** | l/min | 2.2 |
| **D.H.W. pressure min/max** | bar | 0.5/6.0 |
| **Exhaust fumes temper. at max flow rate (80-60°C)** | °C | 79 |
| **Exhaust fumes temper. at min. flow rate (80-60°C)** | °C | 67 |
| **Exhaust fumes temper. at max flow rate (50-30°C)** | °C | 51 |
| **Exhaust fumes temper. at min. flow rate (50-30°C)** | °C | 47 |
| **Smokes flow min/max** | kg/h | 11/50 |
| **$CO_2$ at max/min flow rate G20** | % | 9.0/9.0 |
| **$CO_2$ at max/min flow rate G31** | % | 10.0/10.0 |
| **CE certification** | n° | 1312CN5755 |
| **Category** | | II2H3P |
| **Type** | | B23P-53P/C13-33-43-53-83 |
| **NOx emission class** | | 5 |
| **Weight when empty** | kg | 33.6 |
| **Main burner nozzle** | | |
| Quantity nozzles | n° | 2 |
| G20 nozzle diameter diversified | ø | 2.8/3.8 |
| G31 nozzle diameter diversified | ø | 2.2/2.9 |
| **Consumption at maximum/minimum flow rate** | | |
| G20 | $m^3/h$ | 3.12/0.66 |
| G31 | kg/h | 2.29/0.62 |
| **Gas supply pressure G20/G31** | mbar | 20/37 |

## 1.4 FUNCTIONAL DIAGRAM (fig. 2)

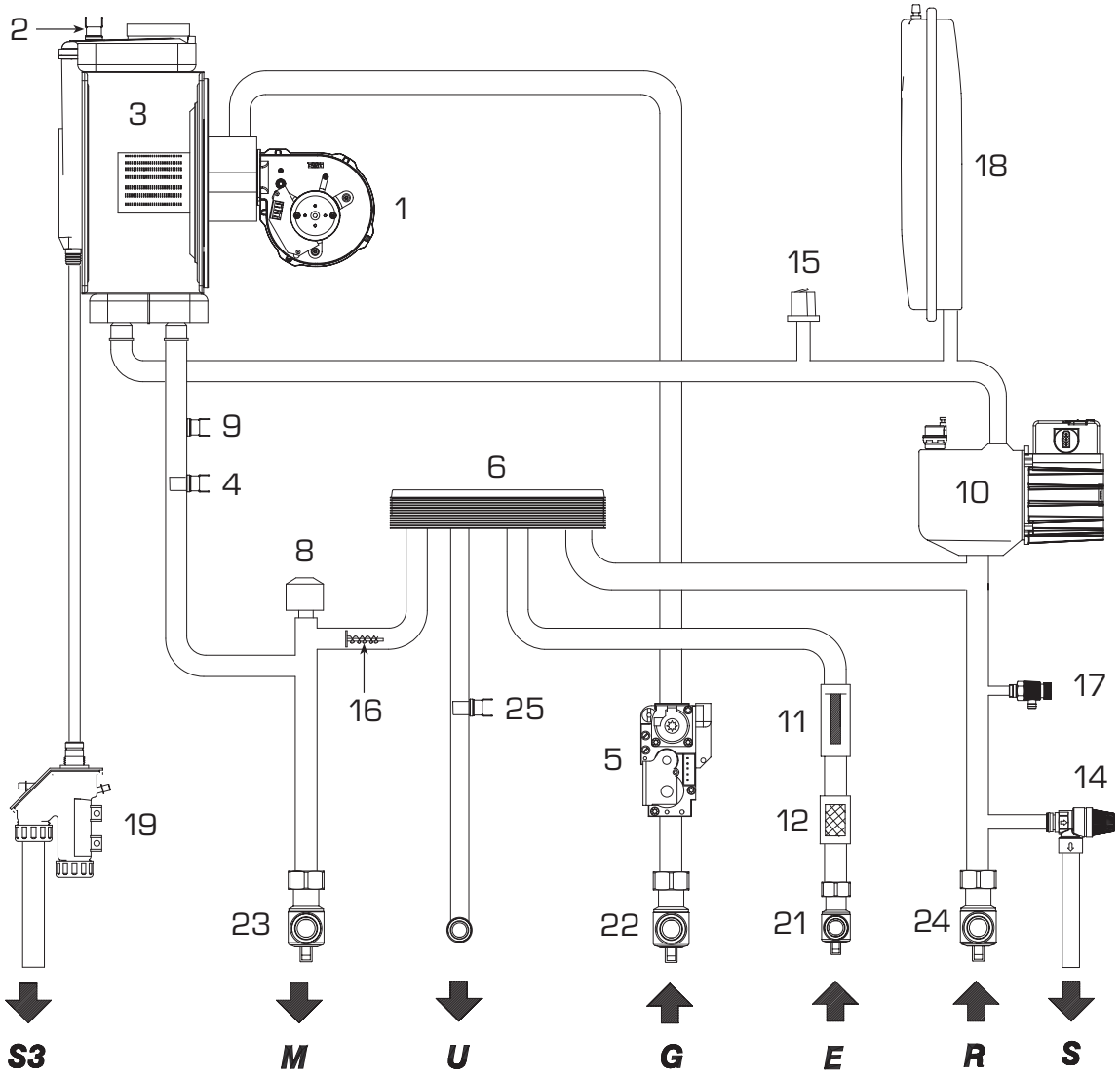


KEY

| | |
|---|---|
| 1 | Fan |
| 2 | Limit stat |
| 3 | Primary exchanger |
| 4 | C.H. sensor (SM) |
| 5 | Gas valve |
| 6 | D.H.W. exchanger |
| 8 | Diverter valve |
| 9 | Safety thermostat |
| 10 | Pump with air release vent |
| 11 | D.H.W. flow switch |
| 12 | Water inlet filter |
| 14 | Pressure relief valve |
| 15 | Water pressure switch |
| 16 | Automatic bypass |
| 17 | Drain vent |
| 18 | Expansion vessel |
| 19 | Condensate drain trap |
| 21 | D.H.W. isolation valve |
| 22 | Gas isolation valve |
| 23 | C.H. flow isolation valve |
| 24 | C.H. return isolation valve |
| 25 | D.H.W. sensor (SS) |

CONNECTIONS

| | |
|---|---|
| R | C.H. return |
| M | C.H. flow |
| G | Gas connection |
| E | D.H.W. inlet |
| U | D.H.W. outlet |
| S3 | Condensation outlet |
| S | Safety valve discharge |

Fig. 2

## 1.5 MAIN COMPONENTS (fig. 3)

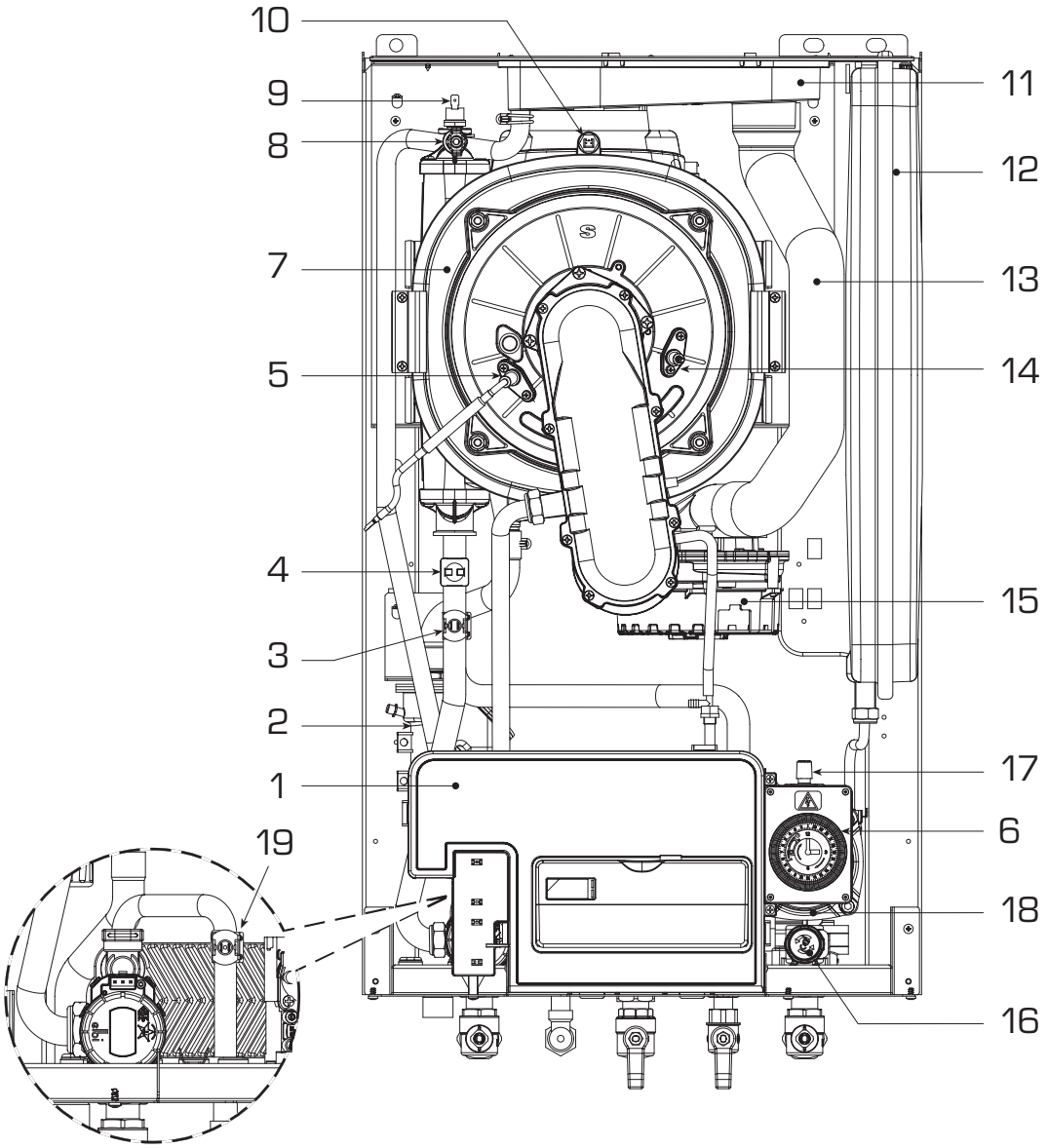


**NOTE: Analogue pressure gauge**

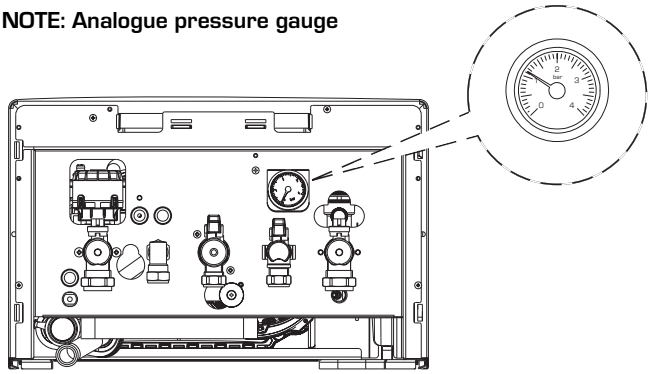

KEY
1 Control panel
2 Condensate drain trap
3 C.H. sensor (SM)
4 Safety thermostat
5 Ignition electrode
6 Programming clock
7 Primary exchanger
8 Air release vent
9 Limit stat
10 Exhaust temperature sensor
11 Smoke chamber
12 Expansion vessel
13 Air inlet
14 Ionisation electrode
15 Fan
16 Pressure relief valve
17 Air release vent
18 Pump
19 D.H.W. sensor (SS)

Fig. 3

# 2 INSTALLATION

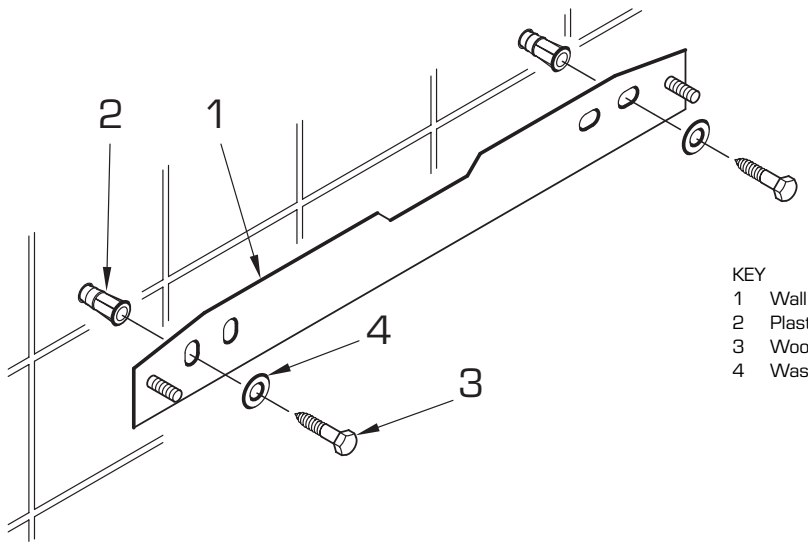


KEY
1 Wall mounting bracket
2 Plastic wall plug (2 Off)
3 Woodscrew (2 Off)
4 Washer (2 Off)

Fig. 4

**It is important that the boiler is initially filled and started for the first time using the method shown in 2.3.3 section e). This procedure should also be used when refilling after draining a boiler.**
The boiler must be installed in a fixed location and only by specialized and qualified person in compliance with all instructions contained in this manual.
The installation of this boiler must be in accordance with the relevant requirements of the current Gas Safety (installation and use), the local building regulations, and and I.E.E. wiring regulations. Detailled recommendations for air supply are given in BS5440:2. The following notes are for general guidance: it is not necessary to have a purpose provided air vent in the room or compartment in which the appliance is installed.

## 2.1 ANTI-FREEZE FUNCTION

The boilers are equipped with anti-freeze function which activates the pump and the burner when the temperature of the water contained inside the appliance drops to below value PAR 10.
The anti-freeze function can only operate if:
- the boiler is correctly connected to the gas and electricity supply circuits;
- the boiler is switched on;
- the boiler ignition is not locked out;
- the essential components of the boiler are all in working order.

In these conditions the boiler is protected against frost down to an environmental temperature of -5°C.

**ATTENTION:**
**In the case of installation in a place where the temperature drops below 0°C, the connection pipes must be protected.**

## 2.2 FIXING THE WALL MOUNTING BRACKET (fig. 4)

- Mark the position of the two wall mounting bracket fixing holes and the flue/air duct hole on the appropriate wall(s).
- Drill the two fixing holes using a 10 mm masonry drill and fit the plastic plugs provided.
- Accurately measure the wall thickness, and note this dimension for later use.
- Secure the wall mounting bracket in position using the screws provided. Ensure that it is the correct way up, as indicated in fig. 4.

## 2.3 CONNECTING UP SYSTEM

Before connecting the boiler it is recommended that the system be flushed in accordance to BS 7593, to eliminate any foreign bodies that may be detrimental to the operating efficiency of the appliance. When connecting up the boiler the clearances in fig 1 should be respected.
The boiler is supplied with a valve pack part number 5184817A. The boiler can be filled and pressure tested prior to any electrical supply being connected with the use of the analogue pressure gauge.
**A safety valve set at 3 bar is fitted to the appliance, the discharge pipe provided should be extended to terminate safely away from the appliance and where a discharge would not cause damage to persons or property but would be detected.**
**The pipe should be a minimum of 15 mm Ø and should be able to withstand boiling water, any should avoid sharp corners or upward pipe runs where water may be retained.**

**Gas Connection**
The gas connection must be made using seamless steel or copper pipe.
Where the piping has to pass through walls, a suitable insulating sleeve must be provided. When sizing gas piping, from the meter to the boiler, take into account both the volume flow rates (consumption) in $m^3/h$ and the relative density of the gas in question. The sections of the piping making up the system must be such as to guarantee a supply of gas sufficient to cover the maximum demand, limiting pressure loss between the gas meter and any apparatus being used to not greater than 1.0 mbar for family II gases (natural gas).
An adhesive data badge is sited inside the front panel; it contains all the technical data identifying the boiler and the type of gas for which the boiler is arranged.

### 2.3.1 Connection of condensation water trap

To ensure safe disposal of the condensate produced by the flue gases, reference should be made to BS6798:2009.
The boiler incorporates a condensate trap which has a seal of 75 mm, therefore no additional trap is required. The advised method of connection to the condensate trap is by using 20 mm overflow pipe with a socket attached to cover the condensate trap connection.
The condensate should ideally be discharged internally into an internal waste pipe(washing machine/sink waste) or a soil pipe to avoid the risk of freezing.
External pipe runs should be avoided, but if it is necessary, the pipework should be at least 32mm and protected from the risc of freezing with a waterproof insulation and the length kept to a minimum and not exceeding 3 m. termination should be into an external gully or purpose made soakaway.

**NOTE: All pipework must have a continuous fall from the boiler and must be resistant to corrosion by condensate, copper or steel is NOT suitable.**
**It should be noted that the connection of a condensate pipe to a drain may be subject to local building control requirements.**

#### 2.3.2 Dealing with condensate

See APPENDIX A for guidance on the disposal of condensate.

#### 2.3.3 Requirements for sealed water systems (fig. 5)

The heating system design should be based on the following information:

a) The available pump head is given in fig. 14.
b) The burner starts if the system pressure is sufficient to operate the pressure switch.
c) The appliance is equipped with an internal by-pass that operates with system heads (H) greater than 3 m. The maximum flow through the by-pass is about 300 l/h. If thermostatic radiator valves are to be installed, at least one radiator should be without a thermostatic valve (usually the bathroom radiator or the radiator in the room containing the room thermostat).
d) A sealed system must only be filled by a competent person using a method similar to that shown in fig. 5. The system design should incorporate the connections appropriate to one of these methods.
e) It is most important that the boiler is not allowed to ignite until it and the heating system is filled.
   Ensure that the electrical supply to the boiler is turned off.
   Open the auto air vent, 17 fig 3.
   Fill the system to approximately 1.5 bar.
   Use the manual air vent located on the uppermost connection to the primary heat exchanger (item 8 fig. 3) to release any air retained, and ensure that all the radiators are vented.
   Top up the system pressure to 1.5 bar.
   Turn on the power supply to the boiler and put the boiler in the Summer mode.
   While in the Summer mode, adjust the heating flow temperature to its minimum 20 degrees. Put the boiler into the Winter mode and allow it to ignite.
   Run the boiler in this mode for approximately 30 minutes, regularly checking that trapped any air is released. and gradually increasing the flow temperature to 60 degrees. When inhibitor is added repeat this procedure with the initial flow temperature at 20 degrees.
   The flow temperature should then be set to the desired value.

**NOTE: If the domestic water supply is metered, or should a water meter be added at a later time, a small expansion vessel should be included on the Domestic hot water pipework.**

### 2.4 CHARACTERISTICS OF FEEDWATER

- All recirculatory systems will be subject to corrosion unless an appropriate water treatment is applied.
  This means that the efficiency of the system will deteriorate as corrosion sludge accumulates within the system, risking damage to pump and valves, boiler noise and circulation problems.
- For optimum performance after installation this boiler and its associated central heating system must be flushed in accordance with the guidelines given in BS 7593 "Treatment of water in domestic hot water central heating systems".
  Sime Ltd recommend only the use of FERNOX products for the flushing and final treatment of the system water.
  This is particularly important in hard water areas.
  Artificially softened water must not be used to fill the heating system.

**METHOD OF FILLING A SEALED SYSTEM**

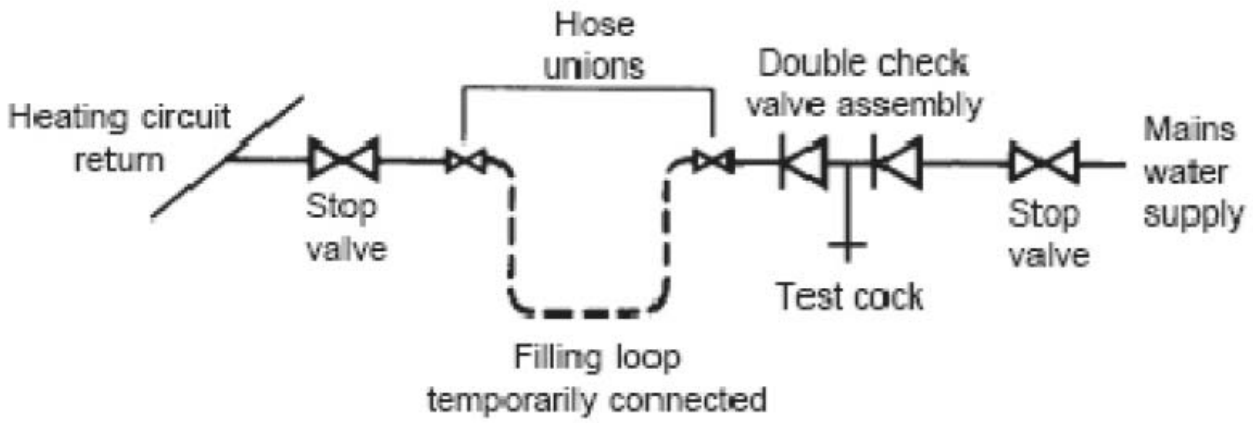


Fig. 5

– It is important to check the inhibitor concentration after installation, system modification and at every service in accordance with the manufacturer's instructions (Test kits are available from inhibitor stockists).

**FLUES INSTALLATION MUST COMPLY WITH THE CURRENT VERSION OF BS5440.**

### 2.5 INSTALLATION COAXIAL DUCT ø 60/100 - ø 80/125 (fig. 6)

The coaxial suction and discharge pipes are supplied in a special kit (that can be purchased separately) along with assembly instructions.
The diagrams of fig. 6 illustrate some examples of different types of fluing options allowed and the maximum lengths that can be reached.

### 2.6 INSTALLATION OF SEPARATE DUCTS ø 80 (fig. 7)

The kit with dedicated pipes enables to separate the exhaust fumes pipes from the air suction pipes (fig. 7):
– for ø 80 pipes, adaptor code 8093050 is available upon request.

**The maximum overall length, resulting from the sum of all the suction and discharge pipes, is determined by the load losses of the single connected accessories and should not exceed 15 mm $H_2O$ (version 25-30) (ATTENTION: the total length of each pipe should not exceed 50 m, even if the total loss is below the maximum applicable loss.)**

See **Table 3** for information on the load losses of single accessories (fig. 8).

#### 2.6.1 Separate ducts kit (fig. 8)

The diagrams of Figure 8 show a some of examples of the permitted exhausts configurations.

**IMPORTANT:**
- **The insertion of each additional 90° bend with a diameter of 60/100 (code 8095850) reduces the available section by 1.5 meters.**
- **The insertion of each additional 90° bend with a diameter of 80/125 (code 8095870) reduces the available section by 2 meters.**
- **Each additional 45° curve installed a diameter of 60/100 (code 8095550) reduces the available length by 1.0 metres.**
- **Each additional 45° curve installed a diameter of 80/125 (code 8095970) reduces the available length by 1.0 metres.**

**HORIZONTAL FLUES MUST BE LEVEL**

**NOTE: Before connecting accessories, it is always advisable to lubricate the internal part of the gaskets with silicon products. Avoid using oils and greases.**

| Model | Length of pipe ø 60/100 | | | Length of pipe ø 80/125 | | |
|---|---|---|---|---|---|---|
| | H | V | | H | V | |
| | | Min | Max | | Min | Max |
| | | | | | | |
| MERIDIAN HE 30 C | 5 m | 1.3 m | 7 m | 10 m | 1.2 m | 13 m |
| | | | | | | |

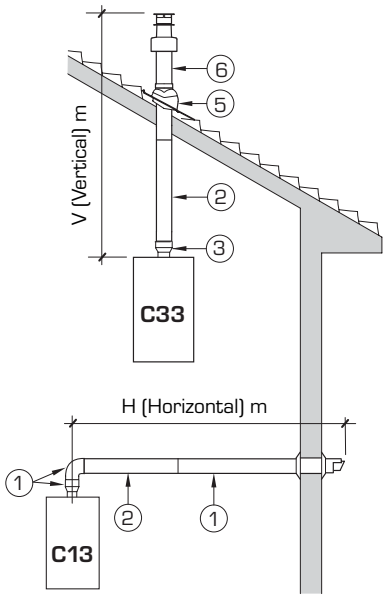


**LIST OF ø 60/100 ACCESSORIES**

1 Coaxial duct kit L. 790 code 8096250
2a Extension L. 1000 code 8096150
2b Extension L. 500 code 8096151
3 Vertical extension L. 140 with coupling code 8086950
5 Tile for joint code 8091300
6 Terminal for roof exit L. 1285 code 8091212 (includes 8086950)

**LIST OF ø 80/125 ACCESSORIES**

1 Coaxial duct kit L. 785 code 8096253
2a Extension L. 1000 code 8096171
2b Extension L. 500 code 8096170
3 Adapter for ø 80/125 code 8093150
5 Tile for joint code 8091300
6 Terminal for roof exit L. 1285 code 8091212A (includes 8093150)

Fig. 6

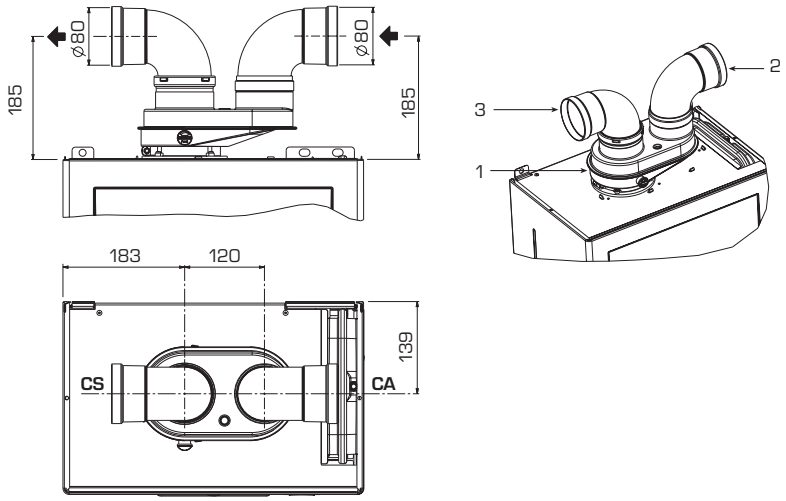


KEY
1 Adaptor with vent
2 Air intake
3 Exhaust

CA Inlet
CS Outlet

Fig. 7

## 2.7 POSITIONING THE OUTLET TERMINALS (fig. 9)

The outlet terminals for forced-draught appliances may be located in the external perimeter walls of the building.
To provide some indications of possible solutions, **Table 4** gives the minimum distances to be observed, with reference to the type of building shown in fig. 9.

## 2.9 ELECTRICAL CONNECTION

The boiler is supplied with an electric cable. Should this require replacement, it must be replaced with one of similar type and dimensions.
The electric power supply to the boiler must be 230V - 50Hz single-phase through a 3 amp fused main switch, with at least 3 mm spacing between contacts.

Respect the L and N polarities and the earth connection.

**NOTE: SIME declines all responsibility for injury or damage to persons, animals or property, resulting from the failure to provide for proper earthing of the appliance, or incorrect connection of external controls. Any fault or component failure due to incorrect connection of external controls is not covered in the warranty.**

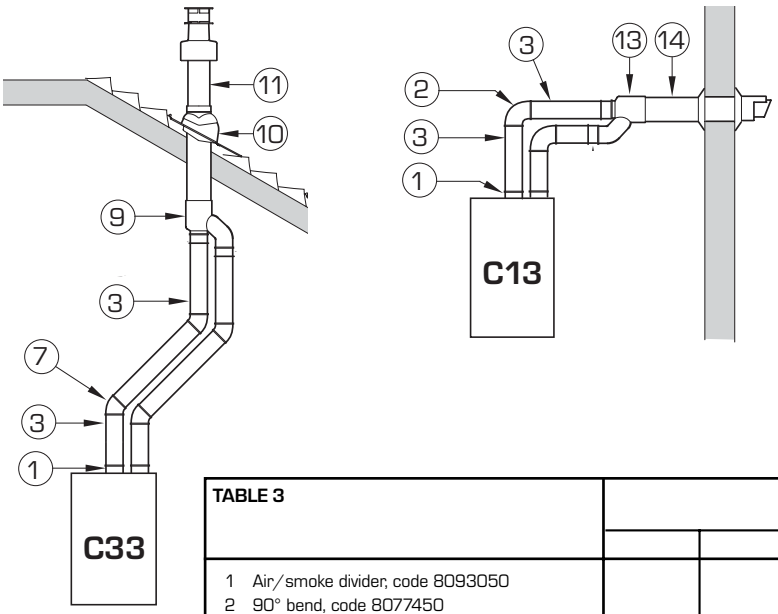


**NOTE**
**Before connecting accessories, it is always advisable to lubricate the internal part of the gaskets with silicon products. Avoid using oils and greases.**

| TABLE 3 | | | MERIDIAN HE 30 C Load loss - mm H2O | | | |
|---|---|---|---|---|---|---|
| | | | Inlet | Exhaust | | |
| 1 | Air/smoke divider, code 8093050 | | 0 | 0 | | |
| 2 | 90° bend, code 8077450 | | 0.25 | 0.30 | | |
| 3 a | Extension 80mm L. 1000, code 8077351 | | 0.20 | 0.20 | | |
| 3 b | Extension 80mm L. 500, code 8077350 | | 0.10 | 0.10 | | |
| 7 | 45° bend, code 8077451 | | 0.20 | 0.20 | | |
| 9 | Inlet/ exhaust fitting, code 8091401 | | – | – | | |
| 10 | Articulated tile, code 8091300 | | – | – | | |
| 11 | Vertical roof terminal, code 8091212B * | | 1.10 | 0.15 | | |
| 13 | Inlet/ exhaust fitting, code 8091401 | | – | – | | |
| 14 | Coaxial Terminal, code 8096253A * | | 1.10 | 0.15 | | |
| * This loss includes the losses with use of item 9 or 13 | | | | | | |

Fig. 8

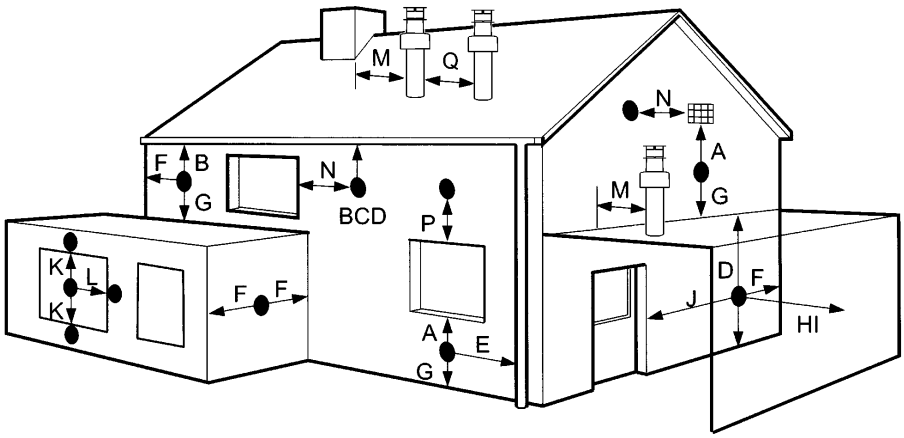


**TABLE 4**

| Terminal position | | Minimum spacing | |
|---|---|---|---|
| **A** | Directly below an openable window, air vent or any other ventilation opening | 300 mm | 12 in |
| **B** | Below guttering, drain pipes or soil pipes (*) | 75 mm | 3 in |
| **C/D** | Below eaves, balconies or carport roof | 200 mm | 8 in |
| **E** | From vertical drain pipes or soil pipes | 75 mm | 3 in |
| **F** | From internal or external corners | 300 mm | 12 in |
| **G** | Above adjacent ground, roof or balcony level | 300 mm | 12 in |
| **H** | From a boundary or surface facing the boiler | 600 mm | 24 in |
| **I** | From a terminal facing the terminal | 1,200 mm | 48 in |
| **J** | From an opening in the carport (eg door, window into dwelling) | 1,200 mm | 48 in |
| **K** | Vertically from a terminal on the same wall | 1,500 mm | 60 in |
| **L** | Horizontally from a terminal on the same wall | 300 mm | 12 in |
| **M** | Horizontally from a vertical terminal to a wall | 300 mm | 12 in |
| **N** | Horizontally from an openable window or other opening | 300 mm | 12 in |
| **P** | Above an openable window or other opening | 300 mm | 12 in |
| **Q** | From an adjacent vertical terminal | 600 mm | 24 in |

(*) For condensing boilers this distance can be reduced to 25 mm without effecting boiler performance, but it will be necessary to protect the surfaces from the effects of condensate

- If the terminal discharges into a pathway or passageway check that combustion products will not cause nuisance and that the terminal will not obstruct the passageway.
- Where the lowest part of the terminal is fitted less than 2 m (78 in) above ground, above a balcony or above a flat roof to which people have access, the terminal MUST be protected by a purpose designed guard.
- Where the terminal is fitted within 850 mm (34 in) of a plastic or painted gutter, or 450 mm (18 in) of painted eaves, an aluminium shield at least 1,500 mm (59 in) long must be fitted to the underside of the painted surface.
- The air inlet/outlet flue duct MUST NOT be closer than 10 mm (0.4 in) to combustible material.
- In certain weather conditions the terminal may emit a plume of steam. This is normal but positions where this would cause a nuisance should be avoided.

**For guidance only, flues should be installed in accordance with BS5440**

Fig. 9

### 2.9.1 Climatic control option

The boiler is designed for connection to an external temperature sensor, supplied on request (code 8094101) in conjunction with remote control (code 8092226), which can automatically regulate the temperature value of the boiler output according to the external temperature.
For installation, follow the instruction in the package. Expansion control kit 8092240 will also be required.

### 2.9.2 External wired controls

The heating function of the boiler can be controlled by voltage free signal, TA, connected to terminals 5 & 6 after removal of the link.

### 2.9.3 Use with different electronic systems

Some examples are given below of boiler systems combined with different electronic systems.
Where necessary, the parameters to be set in the boiler are given.
The electrical connections to the boiler refer to the wording on the diagrams (fig. 11). Zone valve control is activated with every heating request from remote control.
Description of the letters indicating the components shown on the system diagrams 1 to 3:

| | |
|---|---|
| M | C.H. flow |
| R | C.H. return |
| CR | Remote control CR 63 |
| SE | External temperature sensor |
| TA 1-2 | Zone room thermostat |
| VZ 1-2 | Zone valve |
| RL 1-2 | Zone relay |
| SI | Hydraulic separator |
| P 1-2 | Zone pump |
| EXP | Expansion card (code 8092240) |

## 1 BASIC SYSTEM

**SYSTEM WITH A DIRECT ZONE AND ROOM THERMOSTAT, OR WITH A REMOTE CONTROL (Code 8092219), KIT EXPANSION REMOTE CONTROL (Code 8092240) AND EXTERNAL SENSOR (Code 8094101)**

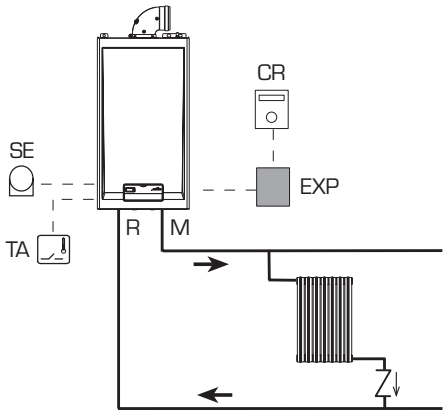


## 2 BASIC SYSTEM

**MULTI-ZONE SYSTEM WITH VALVE, ROOM THERMOSTAT AND EXTERNAL SENSOR (Code 8094101)**

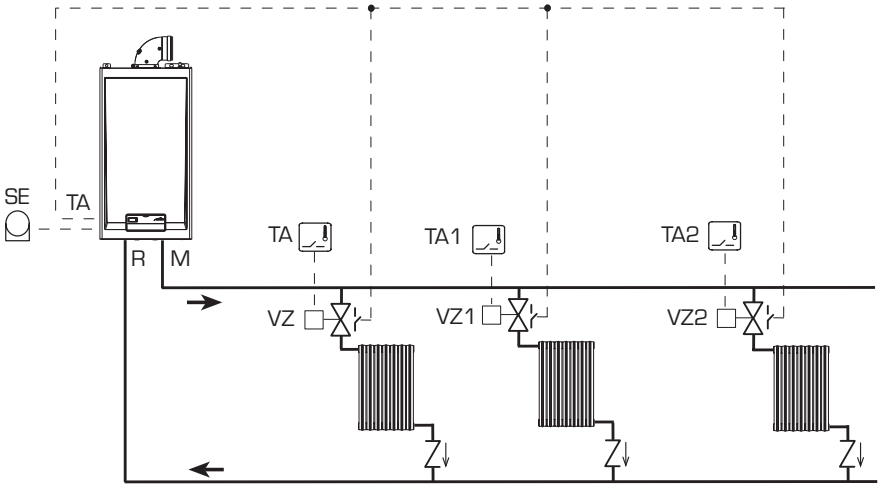


## 3 BASIC SYSTEM

**MULTI-ZONE SYSTEM WITH PUMP, ROOM THERMOSTATS AND EXTERNAL SENSOR (Code 8094101)**

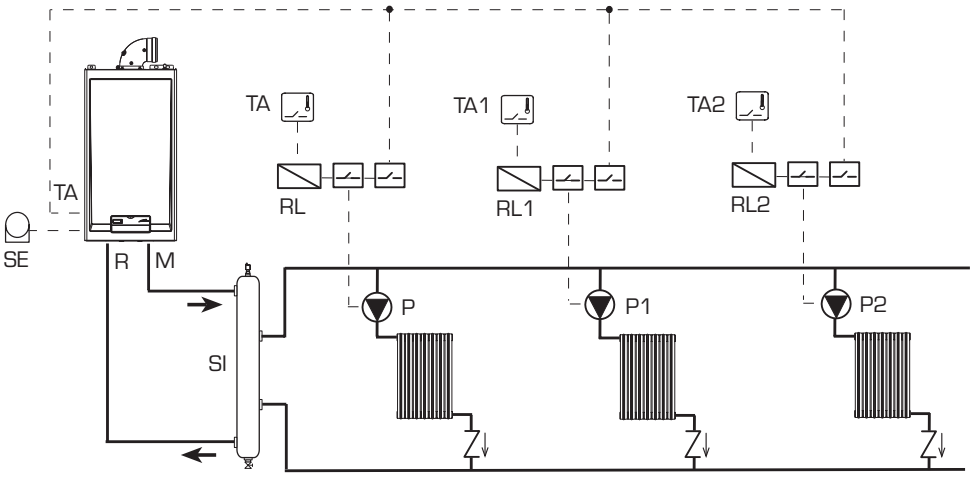

## 2.10 BOILER ELECTRICAL (fig. 11)

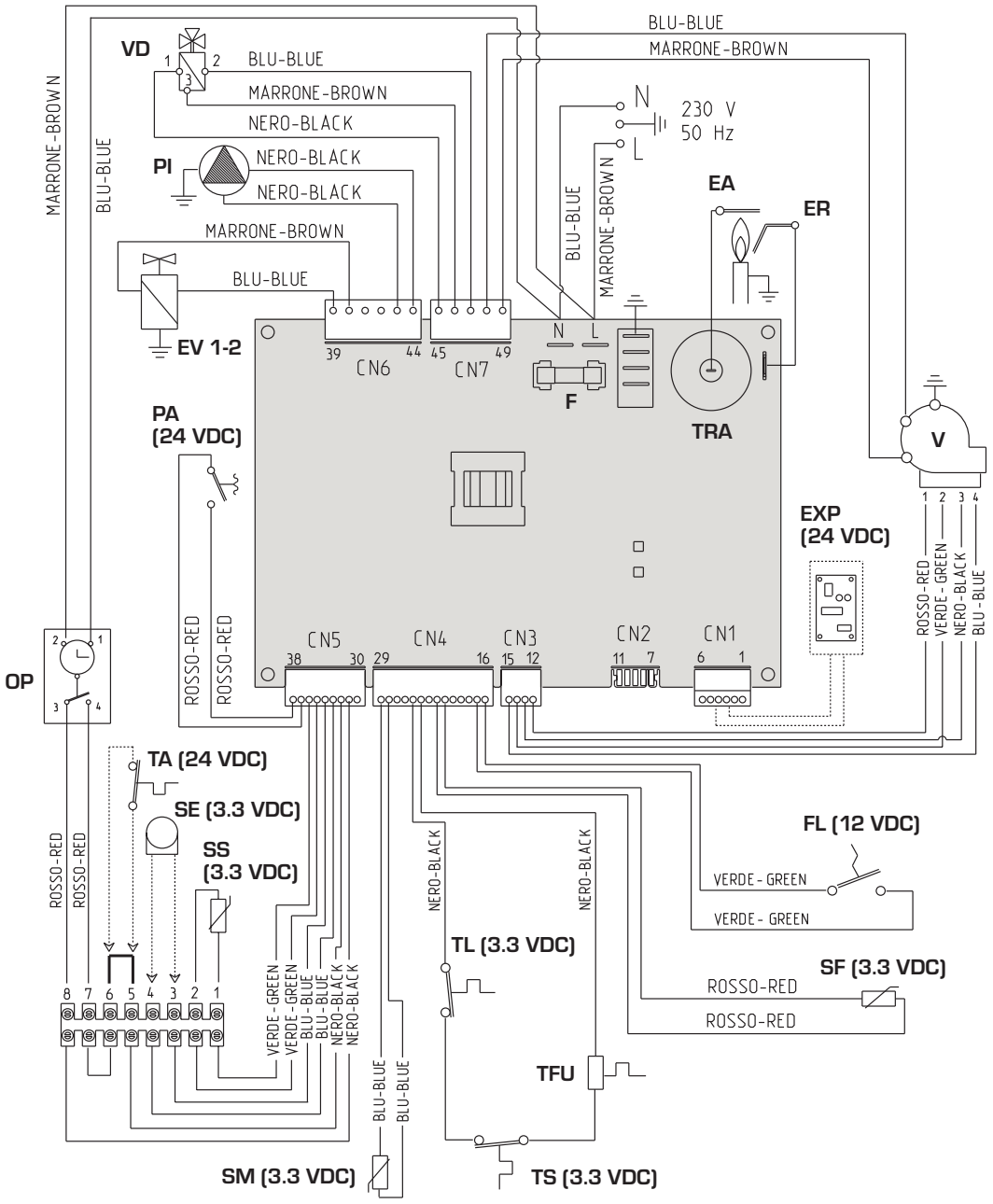


KEY

| | |
|---|---|
| F | Fuse (1.6 AT) |
| TRA | Ignition transformer |
| PI | Pump |
| V | Fan |
| EA | Ignition electrode |
| ER | Ionisation electrode |
| EV1-2 | Gas valve coil |
| VD | Divertor valve |
| OP | Programming clock |
| SM | C.H. sensor |
| TS | Safety thermostat |
| TFU | Thermal fuse |
| TL | Limit stat |
| FL | D.H.W. flow switch |
| SF | Exhaust temperature sensor |
| PA | Water pressure switch |
| TA | Room thermostat |
| SE | External sensor (optional) |
| SS | D.H.W- sensor |
| EXP | Expansion card remote control (optional) |

**NOTE: Connect a voltage free room thermostat TA to terminals 5 & 6 after removal of the link.**

**CONNECTOR SPARE PART CODES:**

| | |
|---|---|
| **CN3** | code 6319158 |
| **CN4** | code 6323856 |
| **CN5** | code 6316253 |
| **CN6** | code 6323861 |
| **CN7** | code 6323860 |

Fig. 11

# 3 CHARACTERISTICS

## 3.1 CONTROL PANEL (fig. 12)

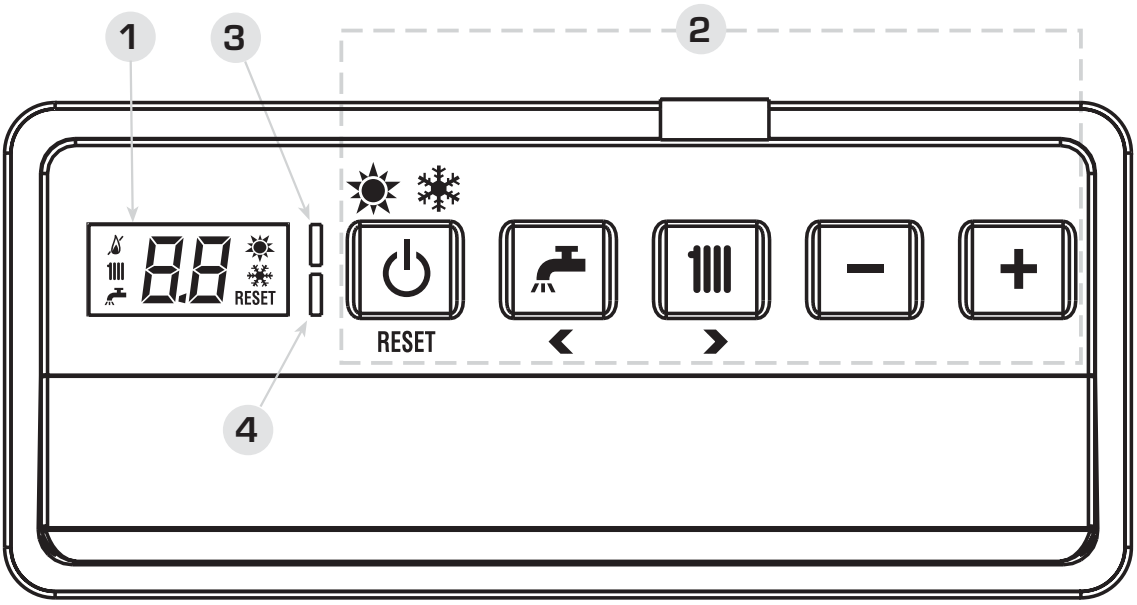


**1 - DESCRIPTION OF DISPLAY ICONS**

SUMMER MODE ICON

WINTER MODE ICON

D.H.W. MODE ICON

HEATING MODE ICON

BURNER LIT ICON

LOCKOUT DUE TO NO IGNITION/FLAME DETECTION

RESET REQUIRED

MAIN DIGITS

**2 - DESCRIPTION OF CONTROLS**

**OPERATING MODE/RESET**
Press this key repeatedly to step from standby to summer to winter. The green LED will flash accompanied by a audible signal, to indicate that the key has been pressed. Press the key for more than two seconds to enter standby. RESET is only available if a re-settable error is signalled.

**D.H.W. SET**
Press the key to display the D.H.W. temperature value set

**HEATING SET**
Press the key to display the heating flow temperature value set (value not realtive to the remote control)

**DECREASE**
Pressing this key decreases the value set

**INCREASE**
Pressing this key increases the value set

**3 - LED GREEN**

ON = Indicates the presence of electrical voltage.
It switches of momentarily every time the keys are pressed.
It can be disabled by setting **PAR 3 = 0**.

**4 - LED RED**

OFF = Normal operation
ON = Boiler error signalled
Flashing when the control panel buttons are pressed inside the PARAMETERS SECTION.

Fig. 12

### 3.2 ACCESS TO INSTALLER'S PARAMETERS

For access to the installer's parameters, press simultaneously the ( and ) keys for 5 seconds.
The red LED flashes and the display shows :

The parameters can be scrolled with or .
To enter the parameter press **–** or **+** .
The value set **flashes**, the display shows :

Proceed as follows to change the set value:
- set the new value using **–** or **+** .
- confirm the set value using or .

Press ⏻ to exit the parameters section. The display is shown automatically after 5 minutes. The parameters section contains the alarms log, info and meters (display only).

#### 3.2.1 Replacing the board or RESETTING parameters

If the electronic board is replaced or reset or the type of gas used is changed, it is necessary to configure PAR 01 and PAR 02 by associating the following values to each type of boiler to be able to restart the boiler:

| GAS | MODELS | PAR 1 |
|---|---|---|
| METHANE (G20) | 30 C | **02** |
| PROPANE (G31) | 30 C | **05** |

| BOILER | PAR 2 |
|---|---|
| D.H.W. flow meter | **01** |
| With storage tank | **03** |
| Heating only | **04** |
| D.H.W flow switch | **09** |
| D.H.W. flow switch with D.H.W. sensor | **13** |

**NOTE: the boiler panel has a label with the values that have to be set for PAR 01 and PAR 02 (fig. 19).**

**PARAMETERS INSTALLER**

**FAST CONFIGURATION**

| PAR | DESCRIPTION | RANGE | UNIT OF MEASUREMENT | INC/DEC UNIT | DEFAULT SETTING |
|---|---|---|---|---|---|
| 01 | Combustion configuration | – = ND<br>1 ... 20 | = | = | "–" |
| 02 | Hydraulic configuration | – = ND<br>1 ... 13 | = | = | "–" |
| 03 | Disabling of the green LED | 0 = Disabled<br>1 = Enabled | = | = | 01 |
| 04 | Correction of external probe values | -5 ... 05 | °C | 1 | 00 |
| 05 | Default time for keypad locking | – = Disabled<br>1 ... 99 | Min. | 1 | 15 |
| 09 | Fan rpm Step ignition | 00 .... 81 | rpm x 100 | **0,1** from 0,1 to 19,9<br>**1** from 20 to 81 | 00 |

**D.H.W. - HEATING**

| PAR | DESCRIPTION | RANGE | UNIT OF MEASUREMENT | INC/DEC UNIT | DEFAULT SETTING |
|---|---|---|---|---|---|
| 10 | Frost protection temperature | 0 ... 10 | °C | 1 | 03 |
| 11 | External sensor antifreeze | – = Disabled<br>- 9 ... 05 | °C | 1 | - 2 |
| 12 | Climatic curve setting | 03 ... 40 | = | 1 | 20 |
| 13 | Minimum heating temperature | 20 ... PAR 14 | °C | 1 | 20 |
| 14 | Maximum heating temperature | PAR 13 ... 80 | °C | 1 | 80 |
| 15 | Maximum heating power | 30 ... 99 | % | 1 | 99 |
| 16 | Post-circulation time | 0 ... 99 | 10 sec. | 1 | 03 |
| 17 | Pump heating activation delay | 0 ... 99 | 10 sec. | 1 | 01 |
| 18 | Re-ignition delay | 0 ... 10 | Min. | 1 | 03 |
| 19 | Flow meter modulation saturation band | 0 ... 99 | % | 1 | 30 |
| 29 | Anti-legionella (only D.H.W. tank) | 0 = Disabled<br>1 = Enabled | = | = | 0 |

**PARAMETERS RE-SET**

| PAR | DESCRIPTION | RANGE | UNIT OF MEASUREMENT | INC/DEC UNIT | DEFAULT SETTING |
|---|---|---|---|---|---|
| 49 * | Reset default parameters (PAR 01 - PAR 02 equal "–") | – , 1 | = | = | = |

**** To reset the circuit board to the default settings, set PAR49 to 1. PAR1 and PAR2 will need to be set as shown in 3.2.1.***

**ALARMS (Display)**

| PAR | DESCRIPTION | RANGE | UNIT OF MEASUREMENT | INC/DEC UNIT | DEFAULT SETTING |
|---|---|---|---|---|---|
| A0 | Code of last error | = | = | = | = |
| A1 | Code of last error - 1 | = | = | = | = |
| A2 | Code of last error - 2 | = | = | = | = |
| A3 | Code of last error - 3 | = | = | = | = |
| A4 | Code of last error - 4 | = | = | = | = |
| A5 | Code of last error - 5 | = | = | = | = |
| A6 | Code of last error - 6 | = | = | = | = |
| A7 | Code of last error - 7 | = | = | = | = |
| A8 | Code of last error - 8 | = | = | = | = |
| A9 | Code of last error - 9 | = | = | = | = |

**INFO (Display)**

| PAR | DESCRIPTION | RANGE | UNIT OF MEASUREMENT | INC/DEC UNIT | DEFAULT SETTING |
|---|---|---|---|---|---|
| i0 | External sensor temperature | -9 ... 99 | °C | 1 | = |
| i1 | C.H. 1 sensor temperature | -9 ... 99 | °C | 1 | = |
| i2 | C.H. 2 sensor temperature | -9 ... 99 | °C | 1 | = |
| i3 | Fumes sensor temperature | -9 ... 99 | °C | 1 | = |
| i4 | Auxiliary sensor AUX temperature | -9 ... 99 | °C | 1 | = |
| i5 | Set of effective heating temperature | PAR 13 ... PAR 14 | °C | 1 | = |
| i6 | Level ionization flame | 00 ... 99 | % | 1 | = |
| i7 | Fan speed | 00 ... 99 | 100 rpm | 1 | = |
| i8 | Flow rate D.H.W. flow meter | 00 ... 99 | l/min | 1 | = |

**COUNTERS (Display)**

| PAR | DESCRIPTION | RANGE | UNIT OF MEASUREMENT | INC/DEC UNIT | DEFAULT SETTING |
|---|---|---|---|---|---|
| c0 | Number hours of operation of the burner | 00 ... 99 | h x 100 | **0,1** from 0,0 to 9,9<br>**1** from 10 to 99 | 00 |
| c1 | Number of ignitions of the burner | 00 ... 99 | x 1000 | **0,1** from 0,0 to 9,9<br>**1** from 10 to 99 | 00 |
| c2 | Total number of errors | 00 ... 99 | x 1 | 1 | 00 |
| c3 | Number accesses of Installer parameters | 00 ... 99 | x 1 | 1 | 00 |
| c4 | Number of accesses of OEM parameters | 00 ... 99 | x 1 | 1 | 00 |

### 3.3 EXTERNAL SENSOR (fig. 13)

If there is an external sensor, the heating settings SET can be taken from the climatic curves according to the external temperature and, limited to with the range values described in point 3.2 (parameters PAR 13 and PAR 14).
The climatic curve to be set can be selected from a value of 3 and 40 (at step 1).
Increasing the steepness of the curves of fig. 14 will increase the output temperature as the external temperature decreases.

### 3.5 CARD FUNCTIONING

The electronic card has the following functions:

- Antifreeze protection of the heating circuits.
- Ignition and flame detection system.
- Control panel setting for the power and the gas for boiler functioning.
- Anti-jammed for the pump which is fed for a few seconds (10") after 48 hours of inactivity.
- Chimney sweep function which can be activated from the control panel.
- Temperature which can be shifted with the external sensor connected.
- Automatic regulation of the ignition power and maximum heating.
  Adjustments are managed automatically by the electronic card to guarantee maximum flexibility in use of the system.

### 3.6 TEMPERATURE DETECTION SENSOR

**Table 4** shows the resistance values of the heating, D.H.W. and fumes sensor.

**If the C.H. sensor (SM) and fumes sensor (SF) is faulty or open circuit, the boiler will not function on either heating or D.H.W.**
**If the D.H.W. sensor (SS) is faulty or open circuit, the boiler will function on either heating and D.H.W. (ALL 10).**

**TABLE 4 (SM - SS - SF sensors)**

| Temperature (°C) | Resistance (Ω) |
|---|---|
| 20 | 12.090 |
| 30 | 8.313 |
| 40 | 5.828 |
| 50 | 4.161 |
| 60 | 3.021 |
| 70 | 2.229 |
| 80 | 1.669 |

### 3.6 ELECTRONIC IGNITION

Ignition and flame detection is controlled by electrodes on the burner which guarantees reaction in the case of accidental extinction or lack of gas within one second.

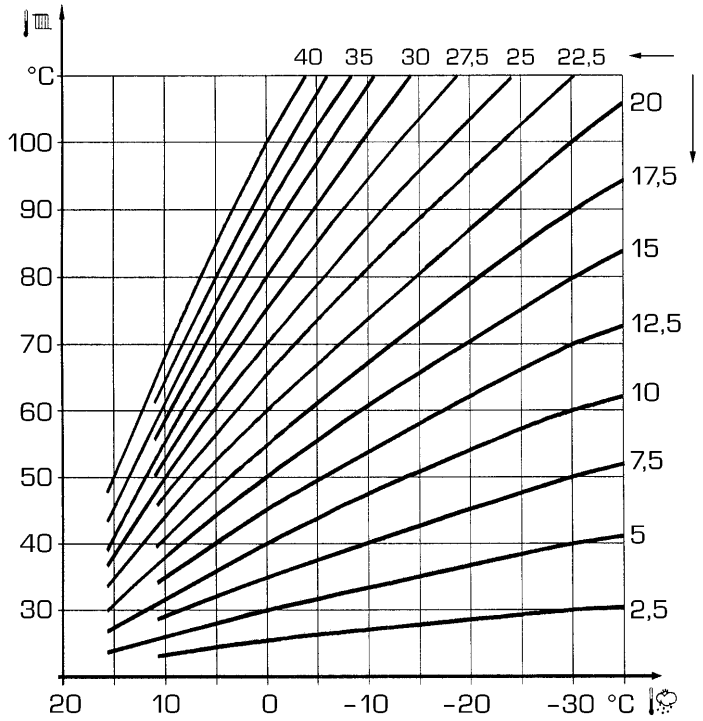


**ATTENTION: curves are calculated at an ambient temperature of 20°C. The user can act on the boiler controls to change the environment set for which the bend has been calculated by ±5°C.**

Fig. 13

#### 3.6.1 Functioning cycle

Burner ignition should occur within 10 seconds of the opening of the gas valve. If after three attempts the ignition is not detected the boiler will lockout (ALL 06):

- **Lack of gas**
  The ignition electrode will discharge for a maximum of 10 seconds. If after three attempts the ignition is not detected the boiler will lockout (ALL 06).
  This can happen the first time a boiler is switched on, or after long periods of inactivity. It can also be caused by a closed gas cock or a gas valve not operating.

- **No ionisation**
  The boiler will spark for 10 seconds, if after 3 attempts the ionisation is not detected, the boiler will lockout (ALL 06).
  This could be due to a poor connection or break in the ionisation cable.
  Check also that the cable is not shorted, badly worn or distorted.

In the case of a sudden loss of voltage, the burner will immediately switch off. When the voltage is restored, the boiler will automatically start up again.

### 3.7 HEAD AVAILABLE TO SYSTEM (fig. 14 )

Residual head for the heating system is shown as a function of rate of flow in the graph in fig. 14.

### 3.8 WATER PRESSURE SWITCH (fig. 15)

The water pressure switch (8) intervenes, blocking burner functioning, if it detects that there is insufficient pressure in the boiler (< 0,6 bar).
To restore the boiler operation, increase the system pressure to 1 - 1,2 bar.

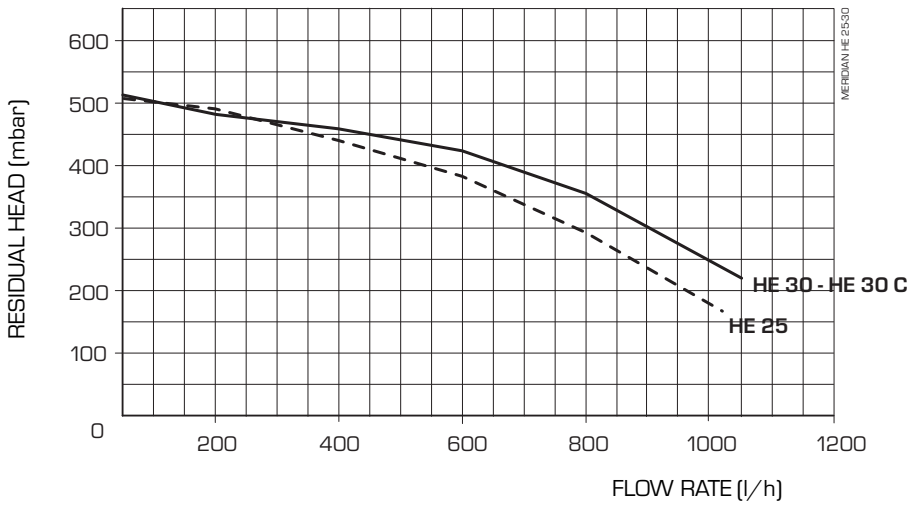


| HE 25 | | HE 30 - HE 30 C | |
|---|---|---|---|
| FLOW RATE (l/h) | RESIDUAL HEAD (mbar) | FLOW RATE (l/h) | RESIDUAL HEAD (mbar) |
| 0 | 512 | 0 | 515 |
| 100 | 500 | 100 | 485 |
| 200 | 487 | 200 | 480 |
| 300 | 468 | 300 | 471 |
| 400 | 443 | 400 | 462 |
| 500 | 412 | 500 | 445 |
| 600 | 377 | 600 | 423 |
| 700 | 338 | 700 | 391 |
| 800 | 294 | 800 | 352 |
| 900 | 246 | 900 | 300 |
| 1030 | 169 | 1050 | 222 |

Fig. 14

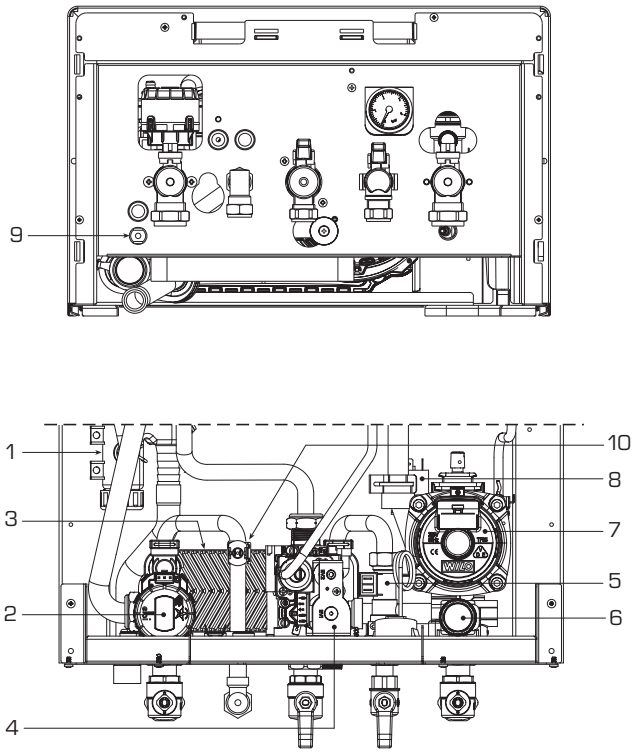


KEY
1 Condensate drain trap
2 Diverter valve
3 D.H.W. exchanger
4 Gas valve
5 D.H.W. flow switch
6 Pressure relief valve
7 Pump with air release vent
8 Water pressure switch
9 Boiler discharge
10 D.H.W. sensor (SS)

Fig. 15

# 4 USE, MAINTENANCE (including BENCHMARK) AND COMMISSIONIG

PLEASE NOTE: During routine servicing and after any maintenance or change of part of the combustion circuit, the following must be checked:

- The integrity of the flue system and the flue seals
- The integrity of the boiler combustion circuit and relevant seals.
- The operational working gas pressure as described in section 4.7.1
- The combustion performance as described in section 4.8.1

### 4.1 GAS VALVE (fig. 16)

The boiler is supplied as standard with a gas valve, model SIT 848 SIGMA (Fig. 16).

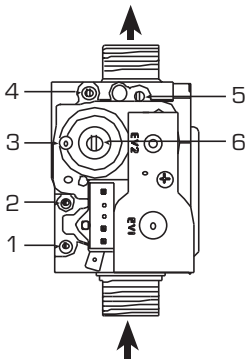


KEY
1 Upstream pressure intake
2 Intermediate pressure intake
3 Air signal inlet (VENT)
4 Downstream pressure intake
5 Capacity step
6 OFF-SET

Fig. 16

### 4.2 GAS CONVERSION (fig. 17)

**This operation must be performed by authorised personnel using original Sime components.**

To convert from natural gas to LPG or vice versa, perform the following operations

- Close the gas cock.
- Replace the two differential nozzles (1-2) and relative seal o-rings (3) with those supplied in the transformation kit.
  NOTE: the difference in the shape of the head of the nozzles, avoid reversal during assembly.
- Reset PAR as shown in 4.2.1.
- Apply the nameplate with the new gas flow layout.
- Calibrate the maximum and minimum pressures of the gas valve following the instructions provided in paragraph 4.2.2.

#### 4.2.1 New fuel configuration

Access the parameters section by pressing the control panel keys ( and ) at the same time for 5 seconds. The red LED flashes and the display shows :

Scroll the parameters using or .
To enter the fuel configuration paramater PAR 01, use − or + .
The set value **flashes** a **MERIDIAN HE 30 C** on natural gas will be show as :

For a **MERIDIAN HE 30 C** boiler to function with LPG, press + until **05** appears.
Confirm this value using or .
Exit the parameters section by pressing ⏻ .

The table below gives the values to set when the supply gas is changed:

| GAS | MODELS | PAR 1 |
|---|---|---|
| METHANE (G20) | 30 C | **02** |
| PROPANE (G31) | 30 C | **05** |

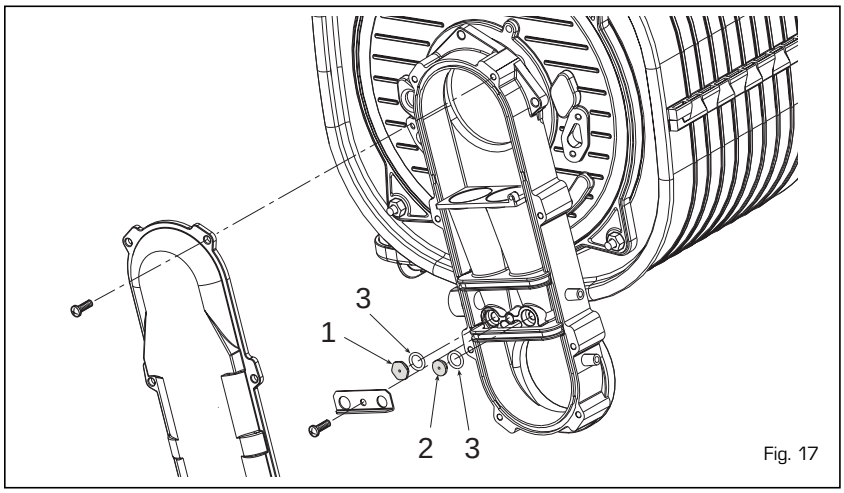


Fig. 17

#### 4.2.2 Calibrating the gas valve pressures (See 4.8.1)

This can only be done using a flue gas analyser. If the combustion reading is greater than the acceptable value AND the integrity of the complete flue system and combustion seals have been verified, and the inlet gas pressure has been verified then adjustments to the gas valve can be made as described below. Make only small adjustments (1/8 turn max), and allow time for the combustion analysis to be made before making further adjustments.

**Sequence of operations:**

**1)** Press buttons − and + at the same time for 5 seconds. Chimney sweep mode, see 4.5.1 (Lo) will appear on the display and the boiler will work at minimum power.

**2)** Press button + to raise the boiler to maximum power (Hi).

**3)** Determine the $CO_2$ values at max power stated below, if required adjust using the capacity step (5 fig. 16):

| | MAX power | |
|---|---|---|
| **Boiler model** | **$CO_2$ (Methane)** | **$CO_2$ (Propane)** |
| **HE 30 C** | 9,0 ±0,3 | 10,0 ±0,3 |

**4)** Press button − to bring the boiler to minimum power (Lo).

**5)** Determine the $CO_2$ values at min power stated below, if required adjust using the OFF-SET adjustment screw (6 fig. 16):

| | MIN power | |
|---|---|---|
| **Boiler model** | **$CO_2$ (Methane)** | **$CO_2$ (Propane)** |
| **HE 30 C** | 9,0 ±0,3 | 10,0 ±0,3 |

**6)** Press buttons − and + several times to verify the pressures; if necessary, make the appropriate corrections.

**7)** Press button ⏻ to exit the function.

### 4.3 RATIO

| CO ppm | |
|---|---|
| **100** | **400** |
| 0,0011 | 0,0044 |
| 0,0010 | 0,0040 |

### 4.4 DISASSEMBLING THE SHELL (fig. 19)

To simplify maintenance operations on the boiler, it is also possible to completely remove the shell, as shown in figure 19.
Remove the screws securing the control panel and tilt it forward and be able to access the internal components of the boiler.

### 4.5 MAINTENANCE (fig. 20)

To guarantee the operation and efficiency of the appliance and to conform to any extended warranty, it must be serviced regularly, dependant on usage, but at least

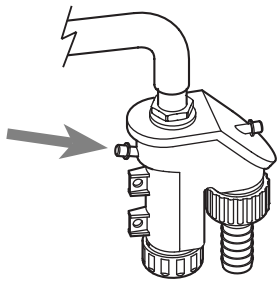

Fig. 20

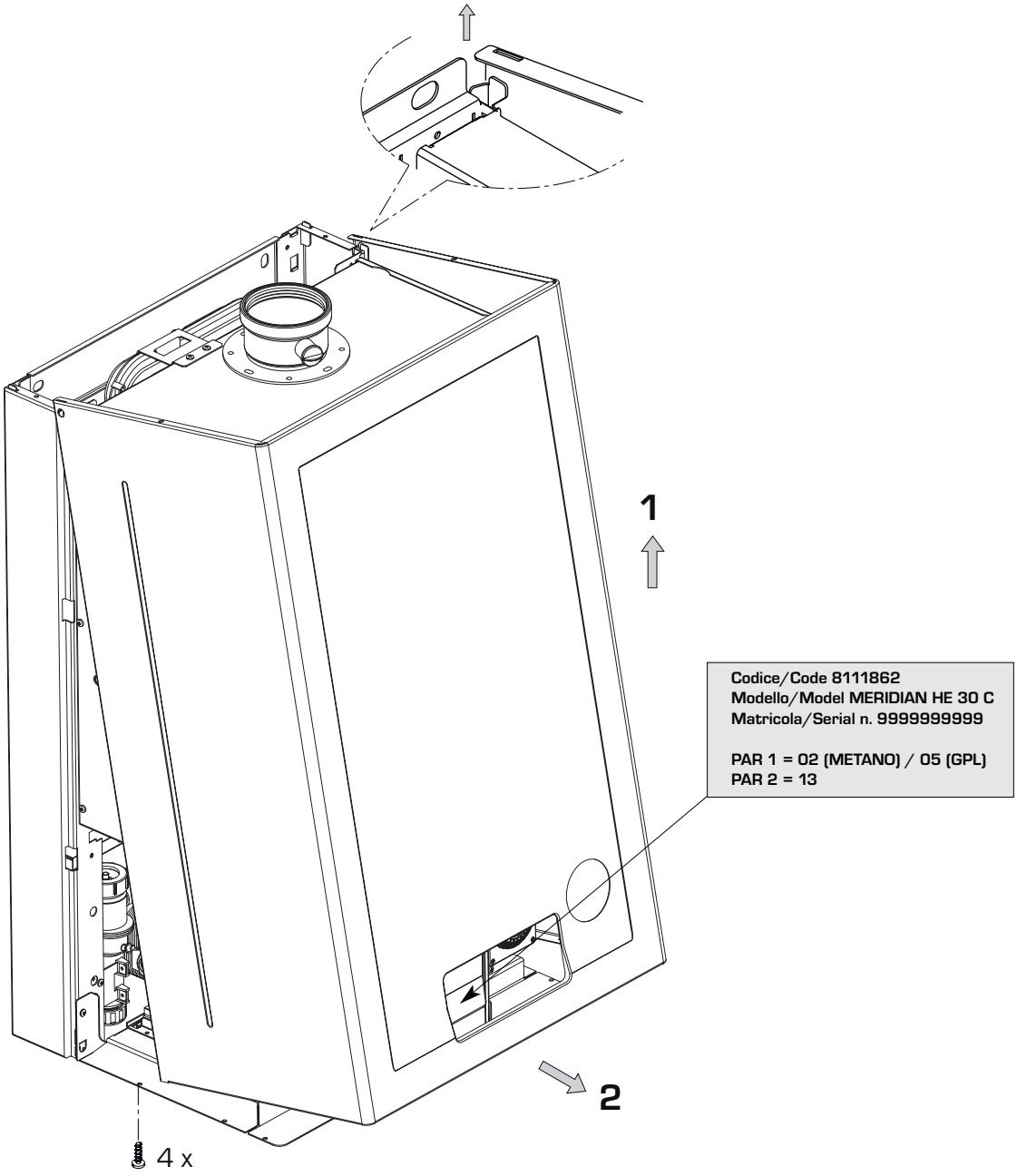


Fig. 19

annually by a qualified Gas Safe Registered engneer.

**During maintenance operations, it is important to verify that the condensate trap contains water (this check is particularly important if the generator has not been used for extended periods of time). If necessary, the condensate trap can be filled using the filling point provided (fig. 20).**

### 4.5.1 Chimney sweep function (see also 4.8.1)

To check boiler combustion, press at the same time the installer's key ( − e + ) for a few seconds. The chimney sweep function will switch on and will continue for 15 minutes. During the 15 minutes functioning of chimney sweep function, pressing the keys ( − and + ) take the boiler respective at maximum (Hi) and at minimum (Lo) power. From that moment, the boiler will start working in heating mode at maximum power, with cut off at 80°C and re-ignition at 70°C.

**Before activating the chimney sweep function make sure that the radiator valves or zone valves are open.**

The test can also be carried out with the boiler working in D.H.W. mode.
For this, after activating the chimney sweep function, open one or more hot water taps. Under these conditions, the boiler will function at maximum power with the D.H.W. kept at between 60°C and 50°C. During the test, the hot water taps must remain open. For exit to the chimney sweep function press the key ⏻ of the control panel.

**The chimney sweep function will automatically switch off after 15 minutes from the activation.**

## 4.6 FUNCTIONING ERRORS

When there is a functioning error, an alarm appears on the display **and switch on the red led.** Descriptions of the errors with relative alarms and solutions are given below (if a error persists contact a authorised service engineer):

- **LOW WATER PRESSURE ERROR ALARM 02 (fig. 22/a)**
  If the pressure detected by the water pressure valve is lower than 0.5 bar, the boiler stops and the display shows the alarm "AL 02".
  Increase the system pressure to between 1.0 and 1.2 bar (use pressure gauge, fig 22/a) using the external filling loop. The boiler will automatically resume operating.

- **C.H. SENSOR ERROR ALARM 05**
  When C.H. sensor (SM) is open or short circuited, the boiler will not function and the display will show the alarm "AL 05".

- **LOCKOUT ALARM 06 (fig. 22/b)**
  If the flame control has not detected the presence of the flame after a complete ignition sequence, or for any other reason the card cannot "see" the flame, the boiler will stop and the display will show the alarm "AL 06". Press the key ⏻ of the controls to start up the boiler again.

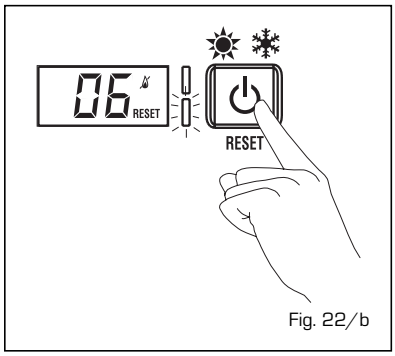

Fig. 22/b

- **SAFETY THERMOSTAT ERROR ALARM 07 (fig. 22/c)**
  Opening of the safety thermostat will turn off the burner, the display will show AL07. If the problem persists for more than one minute, the boiler will stop and the red LED will turn on.
  Press the key ⏻ of the controls to start up the boiler again.

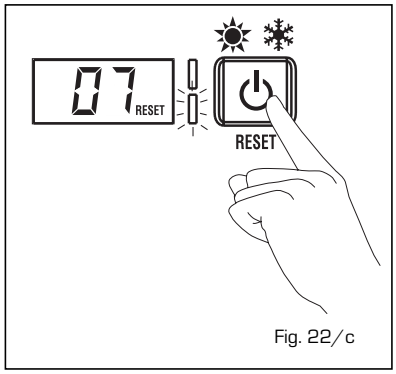

Fig. 22/c

- **FLAME DETECTION ERROR ALARM 08**
  If a flame is detected when one should not be present, the boiler will stop and the display will show "AL 08"

- **D.H.W. SENSOR ERROR ALARM 10**
  When D.H.W. sensor (SS) is open or short circuited, the boiler function in C.H. and DHW and the display will show alarm "AL 10". Replace the sensor because the message disappears.

- **ACTIVATION OF THE EXHAUST TEMPERATURE SENSOR ERROR "AL 13" (fig. 22/d)**
  The activation of the exhaust fumes sensor causes the boiler to stop and the display will show AL 13.
  Press the key ⏻ of the controls to start up the boiler again.

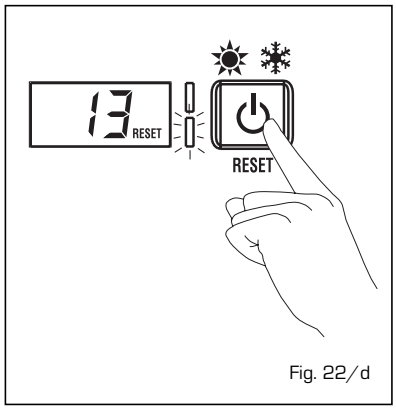

Fig. 22/d

- **EXHAUST TEMPERATURE SENSOR ERROR "AL 14"**
  When the exhaust fumes sensor is opened or short-circuited, the boiler stops and the displays shows anomaly AL 14.

- **FAN ERROR "AL 15"**
  If the fan speed is not within the rated speed range , the display will show "AL 15. If the problem persists for more

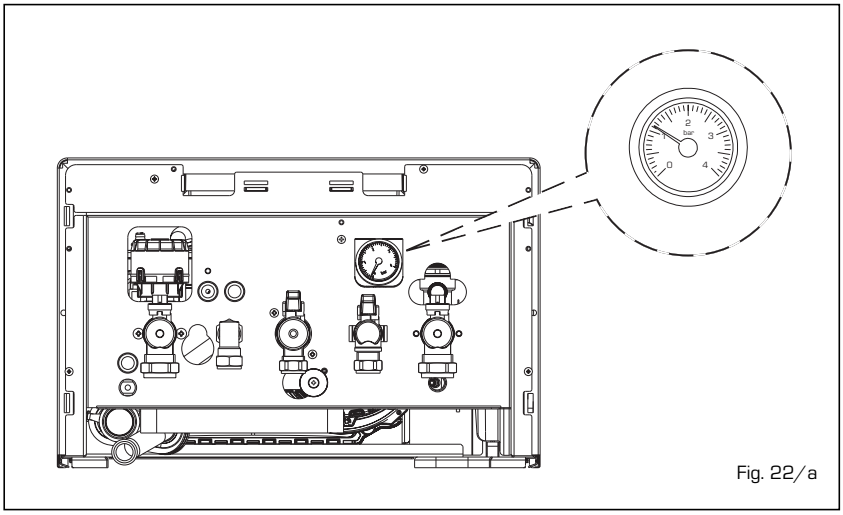

Fig. 22/a

than two minutes the boiler will stop for thirty minutes and then attempt to resume working.

## 4.7 COMMISSIONING AND ROUTINE SERVICE

Commissioning and servicing can only be done by a qualified engineer.

### 4.7.1 Commissioning

PLEASE NOTE: The combustion for this appliance has been checked, adjusted and preset at the factory for operation on the gas type defined on the appliance data plate. However it is advisable to check for correct combustion having first checked:

- That the boiler has been installed in accordance with these instructions.
- The integrity of the flue system and the flue seals.
- The integrity of the boiler combustion circuit and all the relevant seals.

The following procedure should be done after installation a gas purge and tightness/drop test have been made.
Ensure that the auto air vent (12 fig. 3) is opened, turn the electrical supply on.
With the boiler on standby fill the system and pressurise to 1.5 bar.
Ensure that the pump has been manually rotated.
Open the gas cock, press the "❄ mode key" (fig. 12).
Check the operational (working) gas inlet pressure.
Set up the boiler to operate at maximum rate as described in 4.5.1 (Chimney sweep]).
With the boiler operating in the maximum rate condition check that the operational (working) gas pressure at the inlet test point (see fig 16 item 1) is 21 mb +/- 2 mb.
Ensure that this inlet pressure can be obtained with all other gas appliances in the property working.
The boiler will attempt to light.
Press "☀ mode key" (fig. 12).
The burner will extinguish.
Turn on a DHW tap fully (preferably the bath tap).
Set the controls to the required values as shown in the user guide.
Complete the Benchmark sheet enclosed in this manual.
Explain controls and operation to the user.
Leave all documentation with the user.

### 4.7.2 PAR 15 maximum Heating Power

PAR 15 (parameter 15) is set as default at 81% of the maximum boiler heating output. This value should be adjusted to correctly represent the actual heating requirement for the installation.

## 4.8 ROUTINE SERVICE

To comply with the conditions of any extended warranty offered and to ensure continued safe and efficient operation, the boiler must be serviced at regular intervals, at least once a year. This service must be recorded in the Benchmark section of this manual.
It is the law that a competent person such as a Gas Safe Register registered engineer, must carry out any service work.

### 4.8.1 Combustion Check (fig. 23)

Competence to carry out the check of combustion performance.
PLEASE NOTE: BS 6798: 2009 Specification fro installation and maintenance of gas-fired boilers of rated input not exceeding 70 kw net advises that:

* The person carrying out a combustion measurement should have been assessed as competent in the use of a flue gas analyser and the interpretation of the results;
* The flue gas analyser should be one meeting the requirements of BS7927 or BS-EN50379-3 and be calibrated in accordance with the analyser manufacturers requirements, and
* Competence can be demonstrated by satisfactory completion of the CPA1 ACS assessment which covers the use of electronic portable combustion gas analysers in accordance with BS7967, parts 1 to 4.

Conduct a flue gas analysis as detailed in Appendix 2.
See 4.5.1 "Chimney sweep" for details how to set the boiler to minimum and maximum outputs..

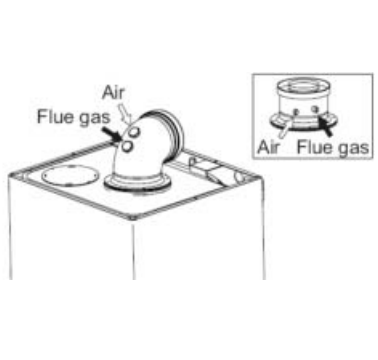

Fig. 23

### 4.8.2 Burner inspection

- Isolate from mains
- Remove case cover
- Isolate gas
- Drop down control case
- Remove ignition and ionisation lead
- Disconnect gas pipe from gas valve to burner mixing arm,
- Disconnect air sensing tube
- Remove air inlet to fan and disconnect the fan wiring
- Remove the four nuts securing the burner to the heat exchanger.
- Carefully lift out the burner.
- Check seals and replace if necessary
- Replace in reverse order

Test for gas tightness.

### 4.8.3 Combustion Chamber

Remove any loose debris from the combustion chamber using a soft brush and a vacuum cleaner.
Take care not to damage the rear insulation panel.

### 4.8.4 Condensate Trap

The condensate trap would not normally require removal during service, but can be checked whilst the burner assembly is removed.
Carefully pour water into the heat exchanger and check that it flows freely to the drain.
Should it require removal, firstly remove the two wire clips securing the condensate drain rubber pipe to the heat exchanger and the condensate trap.
Remove the pipe.
Remove the 1/2" nut securing the condensate trap to the bracket.
Disconnect the drain pipe from the trap.
Clean the trap and refit in reverse order.

## GAS BOILER SYSTEM COMMISSIONING CHECKLIST

**This Commissioning Checklist is to be completed in full by the competent person who commissioned the boiler as a means of demonstrating compliance with the appropriate Building Regulations and then handed to the customer to keep for future reference.**

Failure to install and commission according to the manufacturer's instructions and complete this Benchmark Commissioning Checklist will invalidate the warranty. This does not affect the customer's statutory rights.

| | |
|---|---|
| Customer name: | Telephone number: |
| Address: | |
| Boiler make and model: | |
| Boiler serial number: | |
| Commissioned by (PRINT NAME): | Gas Safe register number: |
| Company name: | Telephone number: |
| Company address: | |
| | Commissioning date: |
| **To be completed by the customer on receipt of a Building Regulations Compliance Certificate*** | |
| Building Regulations Notification Number (if applicable): | |

| **CONTROLS** (tick the appropriate boxes) | | | | |
|---|---|---|---|---|
| Time and temperature control to heating | Room thermostat and programmer/timer | | Programmable room thermostat | |
| | Load/weather compensation | | Optimum start control | |
| Time and temperature control to hot water | Cylinder thermostat and programmer/timer | | Combination Boiler | |
| Heating zone valves | Fitted | | Not required | |
| Hot water zone valves | Fitted | | Not required | |
| Thermostatic radiator valves | Fitted | | Not required | |
| Automatic bypass to system | Fitted | | Not required | |
| Boiler interlock | | | Provided | |

| **ALL SYSTEMS** | | | | |
|---|---|---|---|---|
| The system has been flushed and cleaned in accordance with BS7593 and boiler manufacturer's instructions | | | Yes | |
| What system cleaner was used? | | | | |
| What inhibitor was used? | | | Quantity | litres |
| Has a primary water system filter been installed? | Yes | | No | |

| **CENTRAL HEATING MODE** measure and record: | | | |
|---|---|---|---|
| Gas rate | m³/hr | **OR** | ft³/hr |
| Burner operating pressure (if applicable) | mbar | **OR** Gas inlet pressure | mbar |
| Central heating flow temperature | | | °C |
| Central heating return temperature | | | °C |

| **COMBINATION BOILERS ONLY** | | | | |
|---|---|---|---|---|
| Is the installation in a hard water area (above 200ppm)? | Yes | | No | |
| If yes, and if required by the manufacturer, has a water scale reducer been fitted? | Yes | | No | |
| What type of scale reducer has been fitted? | | | | |
| **DOMESTIC HOT WATER MODE** Measure and Record: | | | | |
| Gas rate | m³/hr | **OR** | ft³/hr | |
| Burner operating pressure (at maximum rate) | mbar | **OR** Gas inlet pressure at maximum rate | mbar | |
| Cold water inlet temperature | | | °C | |
| Hot water has been checked at all outlets | Yes | | Temperature | °C |
| Water flow rate | | | l/min | |

| **CONDENSING BOILERS ONLY** | | |
|---|---|---|
| The condensate drain has been installed in accordance with the manufacturer's instructions and/or BS5546/BS6798 | Yes | |

| **ALL INSTALLATIONS** | | | | | | | |
|---|---|---|---|---|---|---|---|
| Record the following: | At max. rate: | CO | ppm | **AND** | $CO/CO_2$ | Ratio | |
| | At min. rate: (where possible) | CO | ppm | **AND** | $CO/CO_2$ | Ratio | |
| The heating and hot water system complies with the appropriate Building Regulations | | | | | | Yes | |
| The boiler and associated products have been installed and commissioned in accordance with the manufacturer's instructions | | | | | | Yes | |
| The operation of the boiler and system controls have been demonstrated to and understood by the customer | | | | | | Yes | |
| The manufacturer's literature, including Benchmark Checklist and Service Record, has been explained and left with the customer | | | | | | Yes | |

| |
|---|
| Commissioning Engineer's Signature |
| Customer's Signature |
| (To confirm satisfactory demonstration and receipt of manufacturer's literature) |

*All installations in England and Wales must be notified to Local Authority Building Control (LABC) either directly or through a Competent Persons Scheme. A Building Regulations Compliance Certificate will then be issued to the customer.

© Heating and Hotwater Industry Council (HHIC)

benchmark COLLECTIVE MARK
THE MARK OF QUALITY FOR THE INSTALLATION, COMMISSIONING AND SERVICING OF DOMESTIC HEATING AND HOT WATER SYSTEMS

www.centralheating.co.uk

## SERVICE RECORD

**It is recommended that your heating system is serviced regularly and that the appropriate Service Interval Record is completed.**

**Service Provider**

Before completing the appropriate Service Record below, please ensure you have carried out the service as described in the manufacturer's instructions. Always use the manufacturer's specified spare part when replacing controls.

| SERVICE 01 | | | | | Date: |
|---|---|---|---|---|---|
| Engineer name: | | | | | |
| Company name: | | | | | |
| Telephone No: | | | | | |
| Gas safe register No: | | | | | |
| Record: | At max. rate: | CO | ppm | **AND** | $CO_2$ % |
| | At min. rate: (Where Possible) | CO | ppm | **AND** | $CO_2$ % |
| Comments: | | | | | |
| | | | | | |
| | | | | | |
| Signature | | | | | |

| SERVICE 02 | | | | | Date: |
|---|---|---|---|---|---|
| Engineer name: | | | | | |
| Company name: | | | | | |
| Telephone No: | | | | | |
| Gas safe register No: | | | | | |
| Record: | At max. rate: | CO | ppm | **AND** | $CO_2$ % |
| | At min. rate: (Where Possible) | CO | ppm | **AND** | $CO_2$ % |
| Comments: | | | | | |
| | | | | | |
| | | | | | |
| Signature | | | | | |

| SERVICE 03 | | | | | Date: |
|---|---|---|---|---|---|
| Engineer name: | | | | | |
| Company name: | | | | | |
| Telephone No: | | | | | |
| Gas safe register No: | | | | | |
| Record: | At max. rate: | CO | ppm | **AND** | $CO_2$ % |
| | At min. rate: (Where Possible) | CO | ppm | **AND** | $CO_2$ % |
| Comments: | | | | | |
| | | | | | |
| | | | | | |
| Signature | | | | | |

| SERVICE 04 | | | | | Date: |
|---|---|---|---|---|---|
| Engineer name: | | | | | |
| Company name: | | | | | |
| Telephone No: | | | | | |
| Gas safe register No: | | | | | |
| Record: | At max. rate: | CO | ppm | **AND** | $CO_2$ % |
| | At min. rate: (Where Possible) | CO | ppm | **AND** | $CO_2$ % |
| Comments: | | | | | |
| | | | | | |
| | | | | | |
| Signature | | | | | |

| SERVICE 05 | | | | | Date: |
|---|---|---|---|---|---|
| Engineer name: | | | | | |
| Company name: | | | | | |
| Telephone No: | | | | | |
| Gas safe register No: | | | | | |
| Record: | At max. rate: | CO | ppm | **AND** | $CO_2$ % |
| | At min. rate: (Where Possible) | CO | ppm | **AND** | $CO_2$ % |
| Comments: | | | | | |
| | | | | | |
| | | | | | |
| Signature | | | | | |

| SERVICE 06 | | | | | Date: |
|---|---|---|---|---|---|
| Engineer name: | | | | | |
| Company name: | | | | | |
| Telephone No: | | | | | |
| Gas safe register No: | | | | | |
| Record: | At max. rate: | CO | ppm | **AND** | $CO_2$ % |
| | At min. rate: (Where Possible) | CO | ppm | **AND** | $CO_2$ % |
| Comments: | | | | | |
| | | | | | |
| | | | | | |
| Signature | | | | | |

| SERVICE 07 | | | | | Date: |
|---|---|---|---|---|---|
| Engineer name: | | | | | |
| Company name: | | | | | |
| Telephone No: | | | | | |
| Gas safe register No: | | | | | |
| Record: | At max. rate: | CO | ppm | **AND** | $CO_2$ % |
| | At min. rate: (Where Possible) | CO | ppm | **AND** | $CO_2$ % |
| Comments: | | | | | |
| | | | | | |
| | | | | | |
| Signature | | | | | |

| SERVICE 08 | | | | | Date: |
|---|---|---|---|---|---|
| Engineer name: | | | | | |
| Company name: | | | | | |
| Telephone No: | | | | | |
| Gas safe register No: | | | | | |
| Record: | At max. rate: | CO | ppm | **AND** | $CO_2$ % |
| | At min. rate: (Where Possible) | CO | ppm | **AND** | $CO_2$ % |
| Comments: | | | | | |
| | | | | | |
| | | | | | |
| Signature | | | | | |

| SERVICE 09 | | | | | Date: |
|---|---|---|---|---|---|
| Engineer name: | | | | | |
| Company name: | | | | | |
| Telephone No: | | | | | |
| Gas safe register No: | | | | | |
| Record: | At max. rate: | CO | ppm | **AND** | $CO_2$ % |
| | At min. rate: (Where Possible) | CO | ppm | **AND** | $CO_2$ % |
| Comments: | | | | | |
| | | | | | |
| | | | | | |
| Signature | | | | | |

| SERVICE 10 | | | | | Date: |
|---|---|---|---|---|---|
| Engineer name: | | | | | |
| Company name: | | | | | |
| Telephone No: | | | | | |
| Gas safe register No: | | | | | |
| Record: | At max. rate: | CO | ppm | **AND** | $CO_2$ % |
| | At min. rate: (Where Possible) | CO | ppm | **AND** | $CO_2$ % |
| Comments: | | | | | |
| | | | | | |
| | | | | | |
| Signature | | | | | |

*All installations in England and Wales must be notified to Local Authority Building Control (LABC) either directly or through a Competent Persons Scheme. A Building Regulations Compliance Certificate will then be issued to the customer.

© Heating and Hotwater Industry Council (HHIC)

benchmark COLLECTIVE MARK
THE MARK OF QUALITY FOR THE INSTALLATION, COMMISSIONING AND SERVICING OF DOMESTIC HEATING AND HOT WATER SYSTEMS

www.centralheating.co.uk

# 5 FAULT FINDING

If an electrical fault occurs on the appliance the preliminary electrical system checks must be carried out first.
When any service or replacement of electrical components which has required the breaking and re-making of electrical connections has taken place, the following tests must be repeated:
- earth continuity;
- short circuit;
- polarity;
- resistance to earth.

### 5.1 EARTH CONTINUITY CHECK

Appliances must be electrically disconnected, meter set on Ω (ohm) x 1 scale and adjust zero if necessary. Tests leads from any appliance earth point (e.g. inside control box) see wiring diagrams (section 7) to earth pin on plug.
Resistance should be less than 1 Ω (ohm). If the resistance is greater than 1 Ω (ohm) check all earth wires for continuity and all contacts are clean and tight. If the resistance to earth is still greater than 1 Ω (ohm) then this should be investigated futher.

### 5.2 SHORT CIRCUIT CHECK

Switches turned FULL ON - meter set on Ω (ohms) x 1 scale. Test leads from L to N on appliance terminal block, if meter reads 0 then there is a short circuit.
Meter set on Ω (ohm) x 100 scale. Repeat it with leads from L to E. If meter reads less than infinity (∞) there is a fault.

**NOTE: Should it be found that the fuse has failed but no fault is indicated, a detailed continuity check (i.e. by disconnecting and checking each component) is required to trace the faulty component.**
**It is possible that a fault could occur as a result of local burning/arcing but no fault could be found under test. However, a detailed visual inspection should reveal evidence of burning around the fault.**

### 5.3 POLARITY CHECK

Appliance reconnected to mains supply and meter set on 300 V ac scale. Test at appliance terminal block.
- Test leads from L to N meter reads approx.: 240 V ac.
- Test leads from L to E " ☀ " meter reads approx. 240 V ac.
- Test leads from N to E " ☀ " meter reads from 0 to 15 V ac.

### 5.4 RESISTANCE TO EARTH CHECK

Appliance must be disconnected from main supply and meter on Ω (ohm) x 100 scale.
All switches including thermostat on test leads from L to E - if meter reads other than infinity (∞) there is a fault which should be isolated.
A detailed continuity check is required to trace the faulty component.

**IMPORTANT:**
**These series of checks are the first electrical checks to be carried out during a fault finding procedure. On completion of the service/fault finding task which has required the breaking and remaking of electrical connections then the checks 5.1 Earth continuity, 5.3 Polarity and 5.4 Resistance to earth must be repeated.**

# 6 REPLACEMENT OF PARTS

### 6.1 REMOVAL OF BURNER ASSEMBLY

- Isolate from mains
- Remove case cover
- Isolate gas
- Drop down control case
- Remove ignition and ionisation lead
- Disconnect gas pipe from gas valve to burner mixing arm,
- Disconnect air sensing tube
- Remove air inlet to fan and disconnect fan wiring
- Remove the four nuts securing the burner to the heat exchanger
- Carefully remove the burner assembly
- Check seals and replace if necessary
- Replace in reverse order
- Test for gas tightness

### 6.2 REMOVAL OF FAN UNIT

- Isolate from mains
- Remove case cover
- Isolate gas supply
- Drop down control cover
- Remove the burner as described in 6.1
- Loosen 2 x 8mm bolts from fan and remove 2
- Remove fan
- Transfer air hose connector and restrictor if fitted to now fan
- Refit in reverse order
- Re commission boiler
- Test for gas tightness

### 6.3 C.H. THERMISTOR (SM SENSOR)

- Remove case cover
- Unclip thermistor from flow pipe
- Disconnect cable
- Refit in reverse order

### 6.4 D.H.W. THERMISTOR (SS SENSOR)

- Remove case cover
- Unclip thermistor from flow pipe
- Disconnect cable
- Refit in reverse order

### 6.5 SAFETY STAT

- Isolate from mains
- Remove case cover
- Pull clip forwards slide stat upwards
- Remove 2 black wires connected
- Apply heat sink compound to new stat
- Replace in reverse order

### 6.6 EXHAUST TEMPERATURE SENSOR

- Isolate from mains
- Remove case cover
- Unplug cable from sensor
- Unscrew sensor
- Refit in reverse order

### 6.7 IGNITION ELECTRODE

- Turn off power supply
- Remove case cover
- Disconnect electrode from the PCB
- Pull lead through grommet
- Remove electrode fixing screw
- Carefully remove electrode from burner
- Replace in reverse order.

### 6.8 IONISATION ELECTRODE

- Turn off power supply
- Remove case cover
- Disconnect electrode

- Remove electrode fixing screw
- Carefully remove electrode from burner
- Replace in reverse order.

### 6.9 EXPANSION VESSEL

- Isolate from mains
- Remove case cover
- Isolate flow and return valves
- Drain boiler using fitted drain vent
- Disconnect expansion pipe
- Remove expansion securing nut
- Remove vessel
- Check new vessel for correct pressure 1-1.25 bar
- Refit in reverse order

### 6.10 GAS VALVE (fig. 24)

- Isolate from mains
- Remove cover
- Isolate gas supply
- Disconnect leads from gas valve
- Disconnect sensing tube
- Remove gas valve
- Refit in reverse order ensuring seals are replaced as required fit in reverse order ensuring seals are replaced as required
- Setting the gas valve procedure for **MERIDIAN HE 30 C**:
  1. Remove the heating sensor from the flow pipe.
  2. Open the downstream test point (4 fig. 24) and connect a digital manometer set on the mmH2O scale. Ensure the meter is zeroed.
  3. Simultaneously press the - and + buttons for 5 seconds to enter "chimney sweep". "Lo" will appear on the display and the boiler runs at minimum power.
  4. Press the + button and the boiler will go to maximum power "Hi" will be displayed.
  5. Fully open the SHUTTER (5 fig. 24) - turn anti clockwise.
  6. With the shutter fully open, adjust the OFF-SET (6 fig. 24) to obtain the first pressure value shown in Table 1 - OFF-SET column, ensure that the value is correct for the gas being used. If these figures are not obtainable, confirm that the working inlet gas pressure is correct.
  7. Close the SHUTTER (5 fig. 24) to obtain the second pressure reading indicated in Table 1 – SHUTTER column.
  8. Once these adjustments have been obtained, a flue gas analysis must be done. See section 4.2.2.
  9. Press the - button to return the boiler to minimum output "Lo" will be displayed.
  10. Check the analyzer CO2/Ratio and compare to values reported in Table 1. Make any final adjustments by small adjustments to the OFF-SET screw.
  11. Press the + button and verify that the CO2/Ratio has remained stable.
  12. Press the Standby ⏻ key to exit.
  13. Refit the heating sensor to the flow pipe.
  14. Remove the manometer, close the test point, and check for tightness.

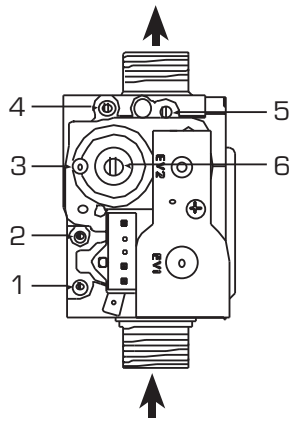


KEY
1 Upstream pressure intake
2 Intermediate pressure intake
3 Air signal inlet (VENT)
4 Downstream pressure intake
5 Capacity step
6 OFF-SET

TABLE 1

| Gas | Model | SHUTTER fully open Adjust OFF-SET mmH2O | OFF-SET adjusted Adjust SHUTTER mmH2O | CO2 % + / - 0.3 | Ratio Less than |
|---|---|---|---|---|---|
| Methane | 25 | 108.7 | 82.9 | 9.0 | 0.004 |
| | 30 | 94.4 | 67.5 | 9.0 | 0.004 |
| | | | | | |
| LPG | 25 | 104.5 | 78.9 | 10.0 | 0.004 |
| | 30 | 85.7 | 75.3 | 10.0 | 0.004 |
| | | | | | |

Fig. 24

### 6.11 MAIN HEAT EXCHANGER

- Turn off power supply
- Isolate gas supply
- Isolate flow and return valves
- Drain boiler using drain vent
- Remove burner assembly as described in 6.1
- Remove flue connection
- Disconnect flue sensor
- Disconnect limit stat
- Remove condensate drain connections
- Disconnect flow and return connections
- Remove two fixing brackets
- Lift out heat exchanger
- Refit in reverse order
- Recommission boiler
- Test for gas tightness.

### 6.12 PUMP HEAD

- Isolate boiler
- Remove cover
- Isolate flow and return valves
- Drain boiler using drain vent
- Remove electrical lead from pump
- Remove 4 x fixing screws from pump housing catching any excess water
- Pull pump forward
- Refit in reverse order

### 6.13 DOMESTIC HEAT EXCHANGER

- Isolate boiler
- Remove cover

- Isolate flow and return
- Turn on D.H.W tap
- Close cold water supply isolation valve
- Drain boiler using drain vent
- Remove 2 screws securing plate heat exchanger
- Remove plate heat exchanger catching any excess water
- Ensure that the four O rings are removed from the technil assembly
- Fit new O rings supplied with new heat exchanger to the heat exchanger
- Refit in reverse order

### 6.14 SAFETY VALVE

- Isolate from mains
- Remove cover
- Isolate flow and return valves
- Drain boiler using drain vent
- Disconnect pipe from safety valve
- Remove safety valve securing clip
- Remove safety valve
- Refit in reverse order

### 6.15 DIVERTER VALVE MOTOR HEAD

- Isolate mains
- Remove cover
- Remove pin from valve head body
- Disconnect lead
- Remove motor
- Refit in reverse order

### 6.16 AUTO AIR VENT

- Isolate boiler
- Remove cover
- Isolate flow and return valves
- Drain boiler using drain vents
- Pull clip forwards and lift auto air vent upwards
- Refit in reverse order

### 6.17 DIVERTER CARTRIDGE

- Isolate boiler
- Remove cover
- Isolate flow and return valves
- Drain boiler using drain vent
- Remove motor head as 6.15
- Remove pin and withdraw the cartridge. catching any excess water
- Refit in reverse order ensure cartridge is locked in position

### 6.18 WATER PRESSURE SWITCH

- Isolate boiler
- Remove cover
- Isolate flow and return valves
- Drain boiler using drain vent
- Remove clip below the switch
- Disconnect the wiring
- Lift switch upwards
- Refit in reverse order

### 6.19 DHW FLOW SWITCH

- Isolate boiler
- Remove cover
- Isolate the cold water supply and open a DHW tap
- Remove the two clips securing the pipe connecting the flow switch assembly to the DHW manifold, and remove the pipe, catching any residual water
- Disconnect the wiring from the flow switch
- Remove the clip securing the flow switch assembly to the cold water connection
- Remove the flow switch assembly
- Refit in reverse order

### 6.20 CONDENSE TRAP

- Isolate boiler
- Remove cover
- Remove 2 condense pipes from condense trap
- Remove locking nut holding trap to bracket
- Refit in reverse order

### 6.21 FLUE HOOD

- Isolate boiler
- Remove cover
- Remove air inlet duct
- Remove flue
- Remove condense pipe left hand side of duct
- Remove 2 screws rear of flue duct
- Remove 2 screws top of boiler case
- Lift out flue duct
- Refit in reverse order
- Checking seals

# 7 EXPLODED VIEWS

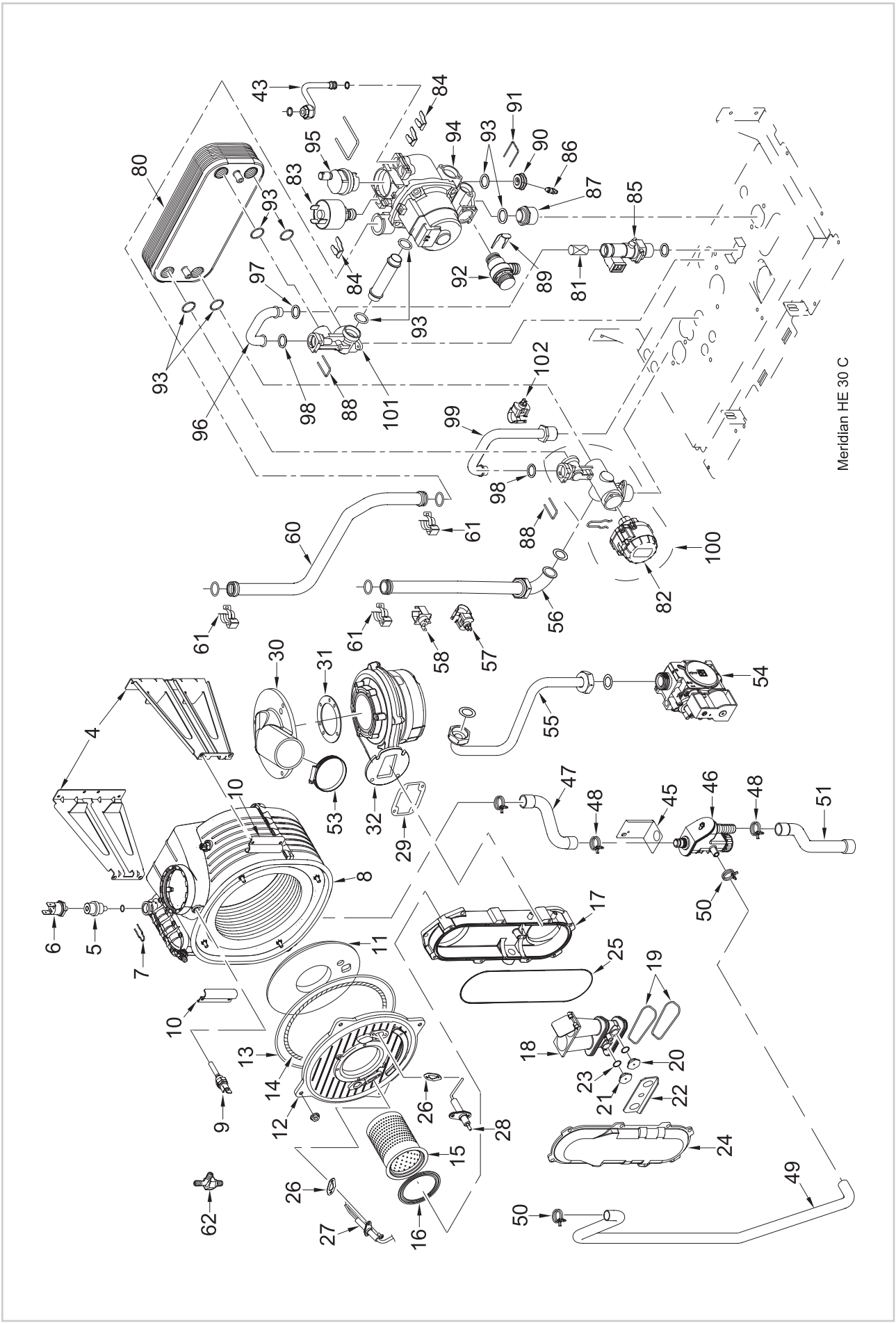

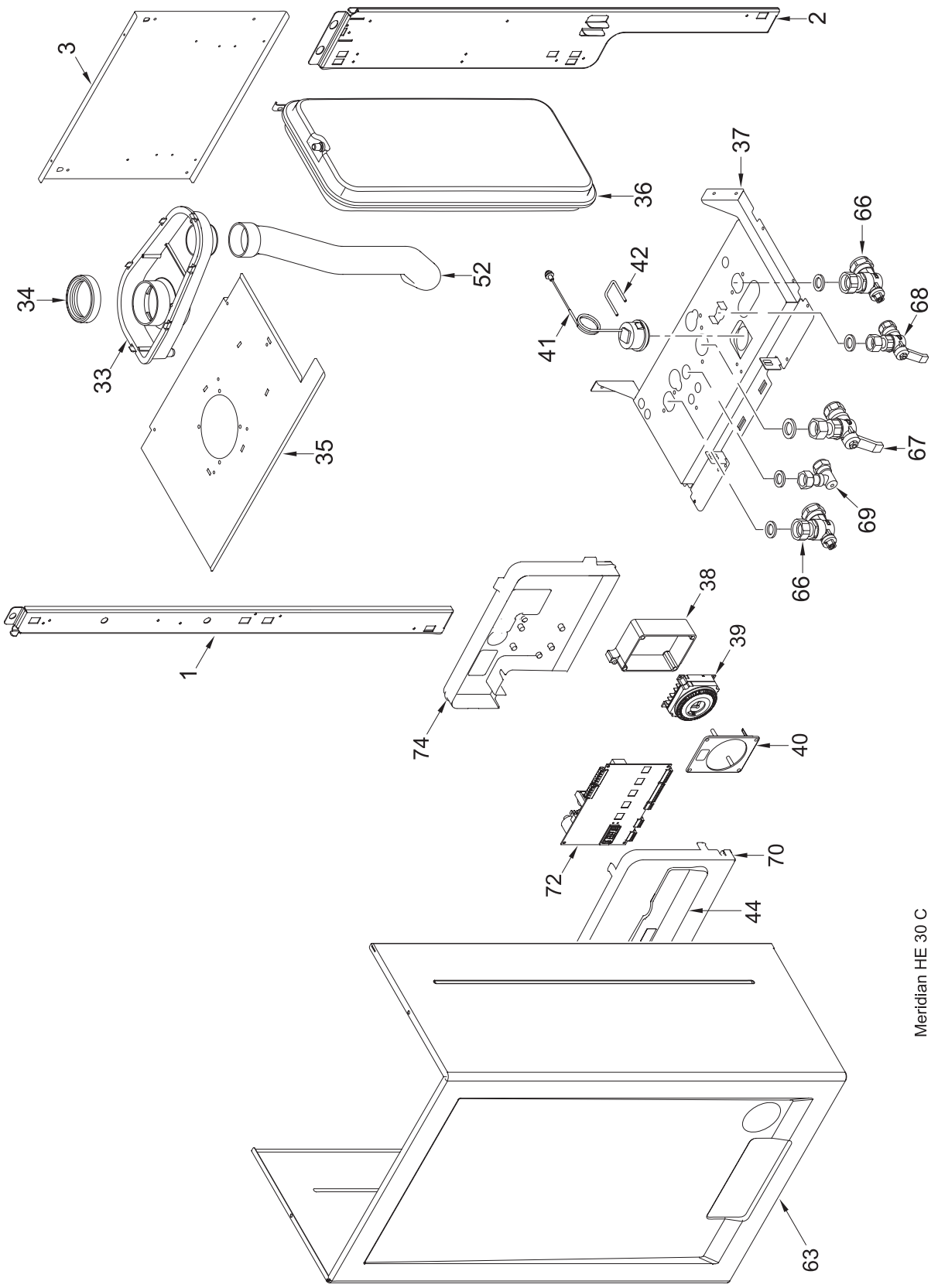


Meridian HE 30 C

| Position | Code | Description | |
|---|---|---|---|
| 1 | 6318350 | Left hand side frame part | |
| 2 | 6318300 | Right hand side frame part | |
| 3 | 6267161 | Main exchanger rear brachet | |
| 4 | 6010833 | Main exchanger supporting bracket | |
| 5 | 6112330 | Bush thermostatic | |
| 6 | 6146728 | Limit stat auto reset 80°C | |
| 7 | 6226624 | Spring air vent knob | |
| 8 | 6278912 | Main exchanger body | |
| 9 | 6277130 | Probe NTC D.4X40 | |
| 10 | 6010829 | Main exchanger fixing bracket | |
| 11 | 6269008 | Main exchanger door insulation | |
| 12 | 5188360 | Main exchanger door | |
| 13 | 6248870 | Combustion chamber O-ring | |
| 14 | 6248871 | Glass fibre sealing cord | |
| 15 | 6278359 | Premix burner | |
| 16 | 6174823 | Gasket for burner flange | |
| 17 | 6278813 | Air-gas hose lower side | |
| 18 | 6274370 | Air-gas mixer assembly | |
| 19 | 6226470 | ORing 52,07 x 2,62 | |
| 20 | 6322300 | Round nozzle diam. 2,80 | MET |
| 20A | 6322302 | Round nozzle diam. 2,20 | LPG |
| 21 | 6322350 | Hexagonal nozzle diam. 3,80 | MET |
| 22A | 6322352 | Hexagonal nozzle diam. 2,90 | LPG |
| 22 | 6267119 | Nozzle locking bracket | |
| 23 | 6226403 | O-ring 2031 | |
| 24 | 6278812 | Air-gas hose upper side | |
| 25 | 6226465 | O-ring diam. 183,83x2,62 | |
| 26 | 6174809 | Gasket for ignition electrode | |
| 27 | 6221644 | Ignition electrode | |
| 28 | 6221645 | Ionisation electrode | |
| 29 | 6174816 | Gasket for fan flange | |
| 30 | 6034305 | Elbow flange | |
| 31 | 6028703 | Gasket for duct flange | |
| 32 | 6261412 | Fan | |
| 33 | 6278703 | Smoke chamber | |
| 34 | 6248855 | P.C. inlet/oulet smokes gasket | |
| 35 | 6010876 | Upper protection shield | |
| 36 | 5183726 | Rectang. expansion vessel 8 l. | |
| 37 | 6318035 | Frame assembly lower side | |
| 38 | 6155420 | Time programmer box | |
| 39 | 6197719 | Time programmer | |
| 40 | 6155421 | Time programmer cover | |
| 41 | 6146112 | Pressure gauge | |
| 42 | 6226628 | Hydrometer Fixing spring | |
| 43 | 6130707 | Expansion vessel connecting pipe | |

| Position | Code | Description |
|---|---|---|
| 44 | 6304853 | Grey cover |
| 45 | 6293006 | Trap fixing bracket |
| 46 | 6277205 | Water trap |
| 47 | 6034155 | Condensate drainage pipe |
| 48 | 2051122 | Clamp diam. 22,1 |
| 49 | 1010215 | Rubber pipe diam. 15x2,5 |
| 50 | 2051120 | Clamp diam. 17,3 |
| 51 | 6034165 | Condensate drainage rubber pipe |
| 52 | 6001158 | Air intake pipe 40 |
| 53 | 2051200 | Hose clamp diam. 50-70 |
| 54 | 6243823 | Gas valve type |
| 55 | 6277441 | Pipe connecting gas valve-mixer |
| 56 | 6227456 | Flowing pipe to C.H. system |
| 57 | 6231360 | Temperature sensor |
| 58 | 6146729 | 100°C safety stat |
| 60 | 6227538 | Return pipe from C.H. system |
| 61 | 6226601 | Spring for heat exchanger connection |
| 62 | 6280590 | Three way fitting + cap kit |
| 63 | 6317852 | Casing |
| 66 | 6177505 | Ball cock 3/4" x 22 |
| 67 | 6177530 | Gas cock 3/4" F x 15 |
| 68 | 6177506 | Ball cock 1/2" x 15 |
| 69 | 6142330 | Quarter bend 1/2" x 15 |
| 70 | 6304766 | Control panel |
| 72 | 6301485 | Main PCB |
| 74 | 6305050 | Control panel cover |
| 80 | 6265651 | Plate heat exchanger |
| 81 | 6281411 | Water rate adjuster 15 l/min |
| 82 | 6087329 | Motor for Honeywell diverting valve |
| 83 | 6037509 | Water pressure switch |
| 84 | 6226639 | Spring clip |
| 85 | 6149318 | Flow water switch 1/2"M.-1/2"M. |
| 86 | 6119358 | Raccord |
| 87 | 6120559 | Nipple 3/4" |
| 88 | 6226642 | Spring clip |
| 89 | 6226640 | Spring clip |
| 90 | 6119357 | Brass cap |
| 91 | 6226641 | Spring clip |
| 92 | 6040215 | Pressure relief valve 3 bar |
| 93 | 6226472 | ORing 17.86x2.62 |
| 94 | 6272331 | Circulating pump |
| 95 | 6013182 | Automatic air vent |
| 96 | 6227134 | D.H.W. inlet pipe |
| 97 | 2030255 | Gasket diam. 12,5x18,5x3 |
| 98 | 6226444 | O-Ring diam. 13,64 x 2,62 |

| Position | Code | Description |
|---|---|---|
| 99 | 6227036 | D.H.W. outlet pipe |
| 100 | 6265821 | Three-way assembly |
| 101 | 6265822 | Brass junction |
| 102 | 6231357 | D.H.W. temperature sensor |
| | 5185139 | Conversion kit to LPG |
| | 6281576 | Water pressure switch + spring |
| | 6281534 | Gaskets kit |
| | 6319695 | O-ring kit |
| | 5199630 | Complete control panel |
| | 6323861 | 6 pole cable connector |
| | 6316253 | 9 pole Stocko connector |
| | 6323856 | 14 pole cable connector |
| | 6319158 | 4 pole cable connector |
| | 6323860 | 5 pole cable connector |
| | 6245374 | Circulating pump connector |
| | 6285003 | Ionisation lead L=1000 |

Products reference: 8111862
Check the correspondence with the boiler data plate.

# 8 APPENDIX A (GUIDANCE HHIC)

HEATING & HOTWATER INDUSTRY COUNCIL

**INDUSTRY GUIDANCE FOR INSTALLERS ON CONDENSATE**

**DRAINAGE PIPE INSTALLATION**

This guidance is endorsed by HHIC members.

## 1. BACKGROUND

During recent winters the UK has experienced prolonged spells of extremely cold weather - down to minus 20°C and below in many areas. This resulted in a significant increase in the number of calls to boiler manufacturers and heating engineers from householders with condensing (high efficiency) boilers where the condensate drainage pipe had frozen and become blocked with ice, causing the boiler to shut down. In the vast majority of cases such problems occur where the condensate drainage pipe is located externally to the building for some part of its length.

British Standards, Building Regulations etc. currently allow condensate drainage pipes to be run either internally or externally, or a combination of these. These documents give guidance on how to install the pipes in order to reduce the possibility of freezing. However this guidance may not be sufficient to prevent freezing in extreme conditions - with widespread and prolonged very low temperatures.

In view of the possibility that UK weather patterns will show more "extremes" in future due to the effects of global climate change, the following guidance updates previous recommendations on condensate drainage pipe installation. All other technical requirements for condensate drain installation given in British Standard BS 6798:2009, or in boiler manufacturers' installation instructions should still be followed.

## 2. REVISED GUIDANCE ON CONDENSATE DRAINAGE PIPE INSTALLATION

Where a new or replacement boiler is being installed, access to an internal "gravity discharge" termination should be one of the main factors considered when determining potential boiler locations, so that the condensate drainage pipe can be terminated as recommended below. On an existing installation, the guidance below should also be followed if work is carried out to "upgrade" the condensate drain age system to reduce the risk of freezing in extreme conditions.

Internal condensate drainage pipework must be a minimum of 19mm ID (typically 22mm OD) plastic pipe and this should "fall" at least 45 mm per metre *away* from the boiler, taking the shortest practicable route to the termination point.

In order to minimise the risk of freezing during prolonged very cold spells, one of the following methods of terminating condensate drainage pipe should be adopted -

## 2.1 INTERNAL TERMINATION:

Wherever possible, the condensate drainage pipe should be terminated at a suitable internal foul water discharge point such as (a) an internal soil and vent stack or (b) an internal kitchen or bathroom waste pipe, washing machine waste pipe etc. A suitable permanent connection to the foul waste pipe should be used. Figures 1, 2(a), 2(b) show appropriate connection methods.

The possibility of waste pipes freezing downstream of the connection point should be considered when determining a suitable connection point - e.g. a slightly longer pipe run to an internal soil stack may be preferable to a shorter run connecting into a kitchen waste pipe discharging directly through the wall to an external drain.

Where "gravity discharge" to an internal termination is not physically possible (e.g. the discharge point is above the appliance location, or access is obstructed by a doorway), or where very long internal pipe runs would be required to reach a suitable discharge point, the following measures may be adopted -

## 2.2 USE OF A CONDENSATE PUMP (TO AN INTERNAL TERMINATION):

Condensate can be removed using a proprietary condensate pump, of a specification recommended by the boiler or pump manufacturer.

The pump outlet should discharge to a suitable internal foul water discharge point, such as (a) an internal soil and vent stack or (b) an internal kitchen or bathroom waste pipe, washing machine waste pipe etc. Figure 3 shows a typical connection method.

A suitable permanent connection to the foul waste pipe should be used and the manufacturer's detailed installation instructions for the pump should be followed.

## 2.3 EXTERNAL TERMINATION:

The use of an externally-run condensate drainage pipe, terminating at a suitable foul water discharge point or purpose-designed soakaway, may be also be considered; however if this termination method is chosen then the following measures should be adopted -

> The pipe should be run internally as far as possible before going externally and the pipe diameter should be increased to a minimum of 30mm ID (typically 32mm OD) before it passes through the wall.
>
> The external run should be kept as short as possible, taking the most direct and "most vertical" route possible to the discharge point, with no horizontal sections in which condensate might collect.
>
> The external pipe should be insulated using suitable waterproof and weatherproof insulation ("Class O" pipe insulation is suitable for this purpose) .

The use of fittings, elbows etc should be kept to a minimum and any internal "burrs" on cut pipework should be removed so that the internal pipe section is as smooth as possible.

The customer/householder should be advised that even with the above measures this type of installation could freeze, and that if this were to occur then boiler shutdown could result, requiring remedial action - possibly involving a chargeable engineer call-out.

Where there are likely to be extremes of temperature or wind-chill, the use of a proprietary trace-heating system for external condensate drainage pipework, incorporating an external frost thermostat, should therefore be considered. If such a system is used then the installation instructions of the trace heating manufacturer and any specific recommendations regarding pipe diameter, insulation, etc. should be followed. All other relevant guidance on condensate drainage pipe installation should also be followed.

*Other cold weather protection methods approved or endorsed by boiler manufacturers and/or service organisations may be adopted if these are considered suitable by the parties involved.*

If an external soil/vent stack is used as the external termination then the connection method shown in Figure 4 should be used, together with the measures on insulation etc. as described above and shown in the diagram.

When a rain water downpipe is used as the termination (***NB*** *only permissible if this downpipe passes to a combined foul and rainwater drainage system*) an air break must be installed between the condensate drainage pipe and the downpipe to avoid reverse flow of rainwater into the boiler should the downpipe itself become flooded or frozen. Figure 5 shows a suitable connection method.

Where the condensate drainage pipe is terminated over an open foul drain or gully, the pipe should terminate below the grating level, but above water level, in order to minimise "wind chill" at the open end. Pipe drainage will be improved if the end is cut at 45° as opposed to a straight cut. The use of a drain cover (such as those used to prevent blockage by leaves) may offer further protection from wind chill. Figure 6 shows a suitable connection method.

Where the condensate drain pipe terminates in a purpose-designed soakaway (see BS 6798:2009 or boiler installation manual for soakaway design requirements) any above-ground section of condensate drainage pipe should be run and insulated as described above. Figure 7 shows a suitable connection method.

## 3. UNHEATED INTERNAL AREAS:

Internal condensate drainage pipes run in unheated areas such as lofts, basements and garages should be treated as external pipe.

HEATING & HOTWATER INDUSTRY COUNCIL

**NOTES**

*The Benchmark Commissioning Checklist (located at the back of the boiler installation manual) should be completed as required to record details of the condensate drainage pipe installation.*

*Where an external condensate drainage pipe is installed, the customer should be made aware of the risks and consequences of its freezing and offered the option to fit trace heating (or other measures approved by the boiler manufacturer or service organisation).*

*Separate guidance has been published for householders on remedial actions which can be taken if a condensate drainage pipe freezes. This may result in requests for alteration to condensate drainage pipework, in which case the guidance above should be followed.*

*I*n some instances (e.g. where an elderly person's heating needs to be reinstated as *an emergency measure) condensate drainage pipes may have been cut in order to bypass any blockage and allow re-ignition of the boiler, with condensate being collected in a suitable container as a temporary solution.*

*While not unsafe, this is not recommended practice and if such action has been taken then the condensate drainage pipe must be reinstated as soon as possible, using the above guidance to reduce risk of freezing in future.*

**Figure 1 – Connection of condensate drainage pipe to internal soil and vent stack**

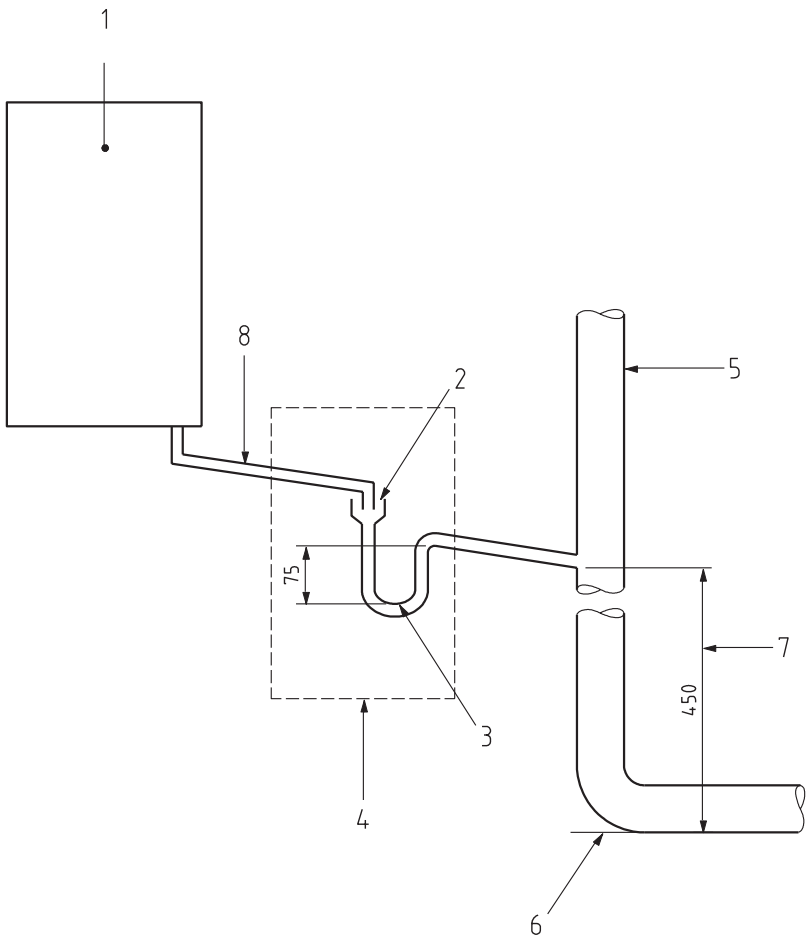


**Key**

1 Boiler
2 Visible air break
3 75 mm trap
4 Visible air break and trap not required if there is a trap with a minimum condensate seal of 75 mm incorporated into the boiler
5 Soil and vent stack
6 Invert
7 450 mm minimum up to three storeys
8 Minimum internal diameter 19 mm

**Figure 2(a) – Connection of a condensate drainage pipe downstream of a sink, basin, bath or shower waste trap**

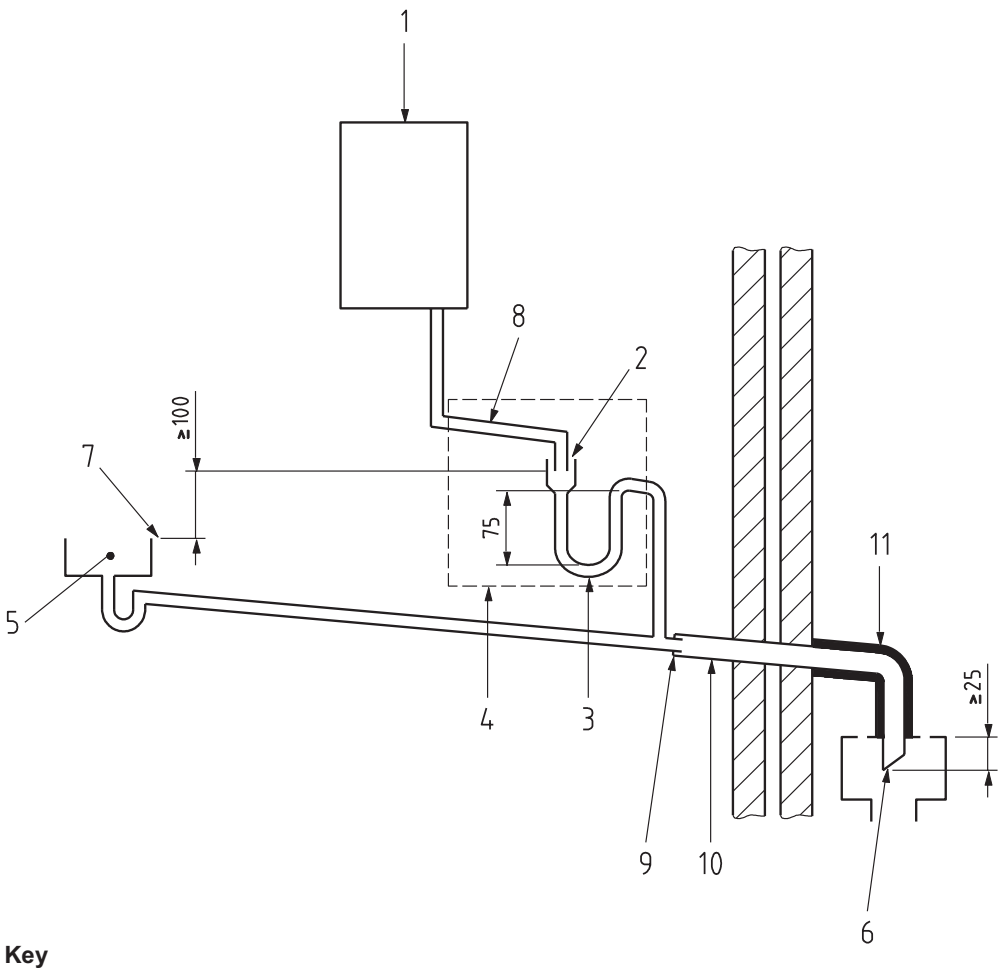


**Key**

1 Boiler
2 Visible air break
3 75 mm trap
4 Visible air break and trap not required if there is a trap with a minimum condensate seal of 75 mm incorporated into the boiler. In this case the 100 mm is measured to the trap in the boiler.
5 Sink, basin, bath or shower
6 Open end of condensate drainage pipe direct into gully 25 mm min below grating but above water level; end cut at 45 °
7 Sink lip
8 Minimum internal diameter 19 mm
9 Pipe size transition
10 Minimum internal diameter 30 mm
11 Water/weather proof insulation

**Figure 2(b) – Connection of a condensate drainage pipe upstream of a sink, basin, bath or shower waste trap**

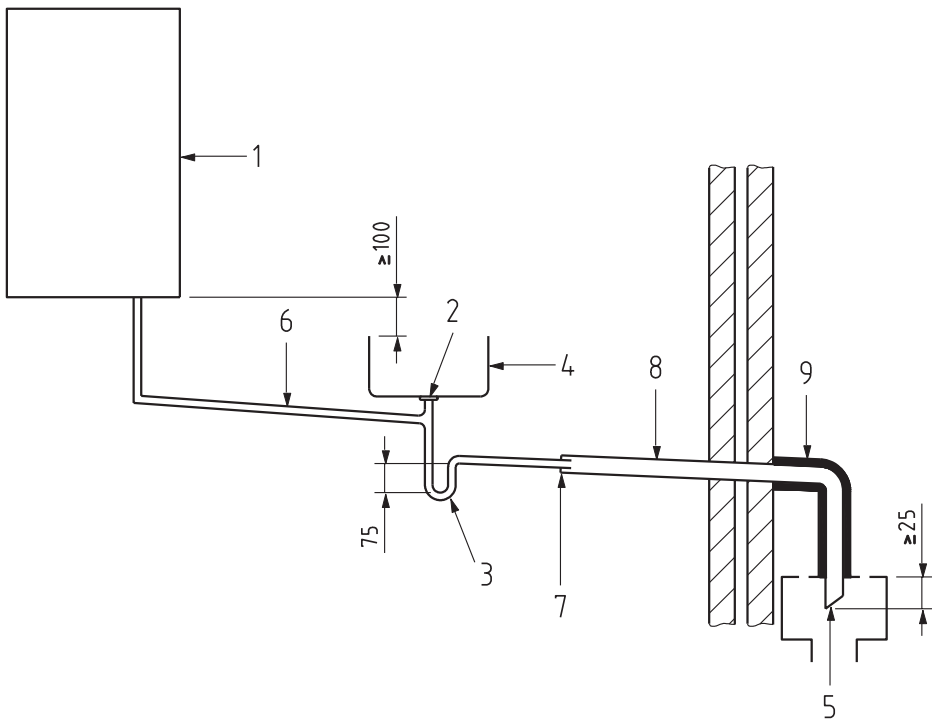


**Key**

1 Boiler
2 Visible air break at plug-hole
3 75 mm sink, basin, bath or shower waste trap
4 Sink, basin, bath or shower with integral overflow
5 Open end of condensate drainage pipe direct into gully 25 mm min below grating but above water level; end cut at 45 °
6 Minimum internal diameter 19 mm
7 Pipe size transition
8 Minimum internal diameter 30 mm
9 Water/weather proof insulation

**Figure 3** – **Connection of a condensate pump -** typical method (NB manufacturer's detailed **instructions should be followed).**

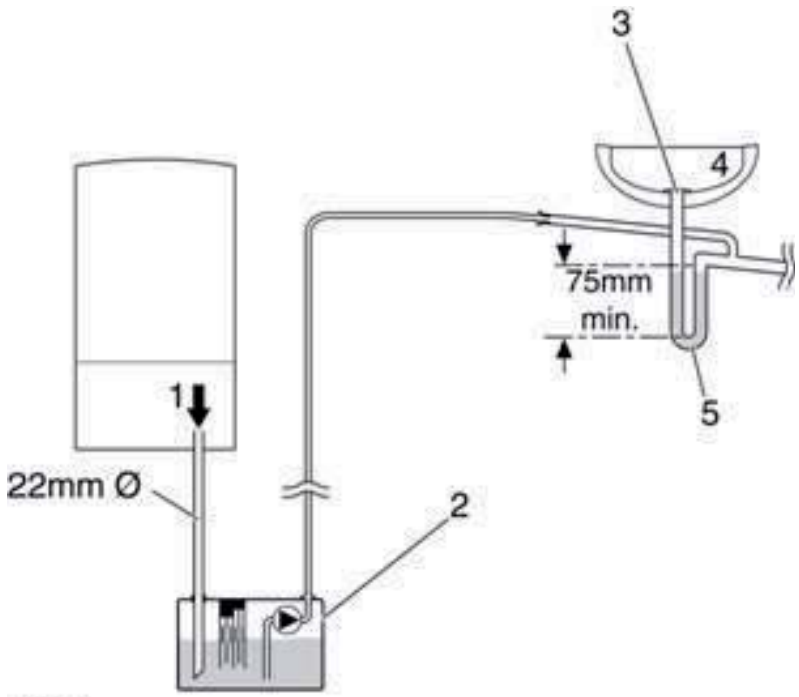


**Key**

1 Condensate discharge from boiler.
2 Condensate pump
3 Visible air break at plug hole.
4 Sink or basin with integrated overflow.
5 75mm sink waste trap.

**Figure 4 – Connection of condensate drainage pipe to external soil and vent stack**

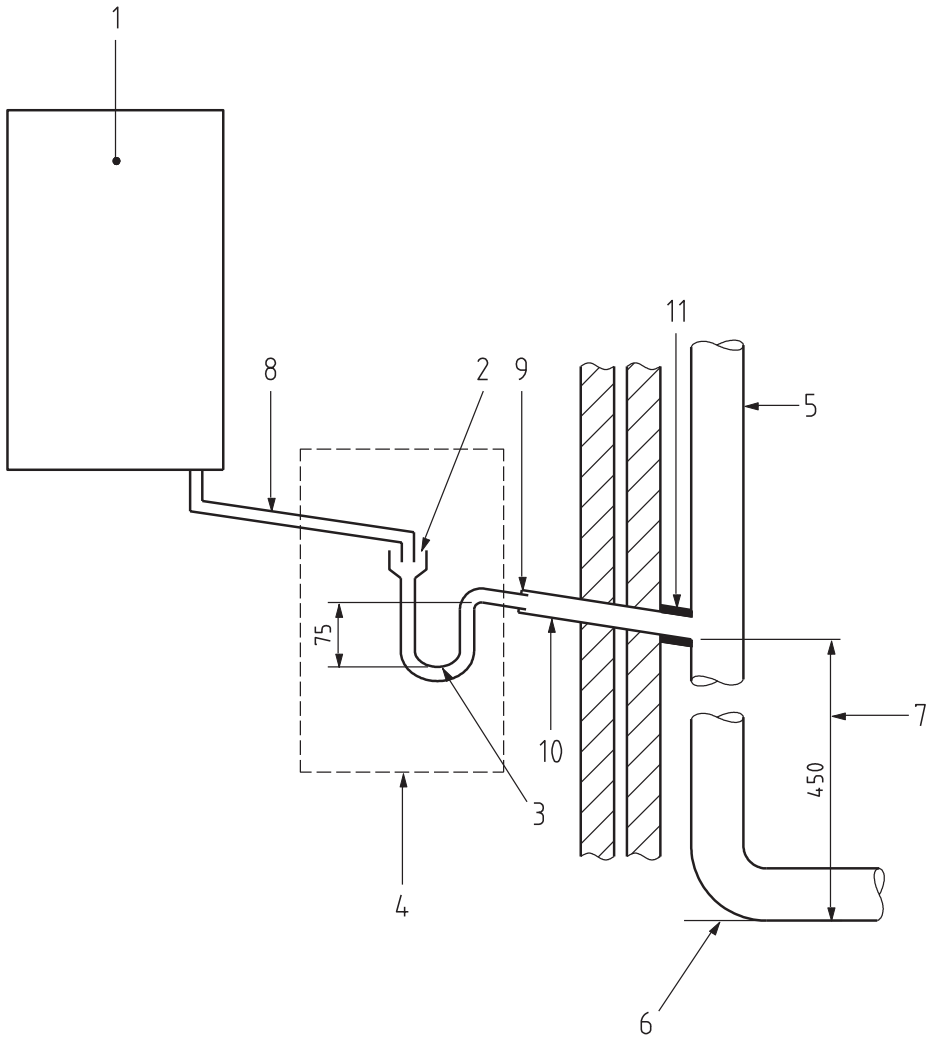


**Key**

| | | | |
|---|---|---|---|
| 1 | Boiler | 7 | 450 mm minimum up to three storeys |
| 2 | Visible air break | 8 | Minimum internal diameter 19 mm |
| 3 | 75 mm trap | 9 | Pipe size transition point |
| 4 | Visible air break and trap not required if there is a trap with a minimum condensate seal of 75 mm incorporated into the boiler. | 10 | Minimum internal diameter 30 mm |
| | | 11 | Water/weather proof insulation |
| 5 | Soil and vent stack | | |
| 6 | Invert | | |

**Figure 5 – External termination to rainwater downpipe (NB only combined foul/rainwater drain)**

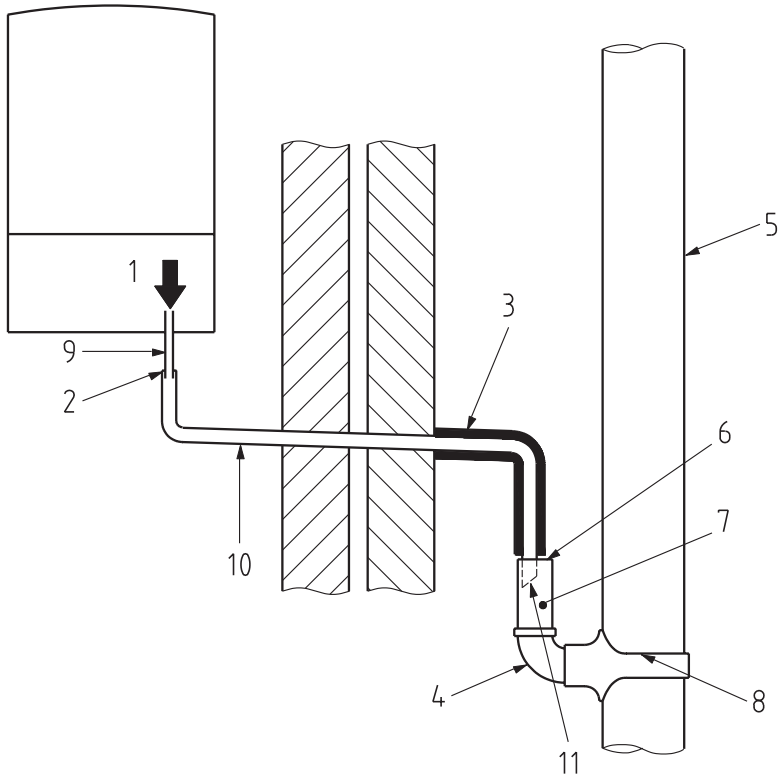


**Key**

| | | | |
|---|---|---|---|
| 1 | Condensate discharge pipe from boiler | 7 | Air gap |
| 2 | Pipe size transition point | 8 | 68 mm ∅ PVCu strap-on fitting |
| 3 | Water/weather proof insulation | 9 | Minimum internal diameter 19 mm |
| 4 | 43 mm 90° male/female bend | 10 | Minimum internal diameter 30 mm |
| 5 | External rain water pipe into foul water | 11 | End cut at 45 ° |
| 6 | External air break | | |

**Figure 6 – External drain, gully or rainwater hopper**

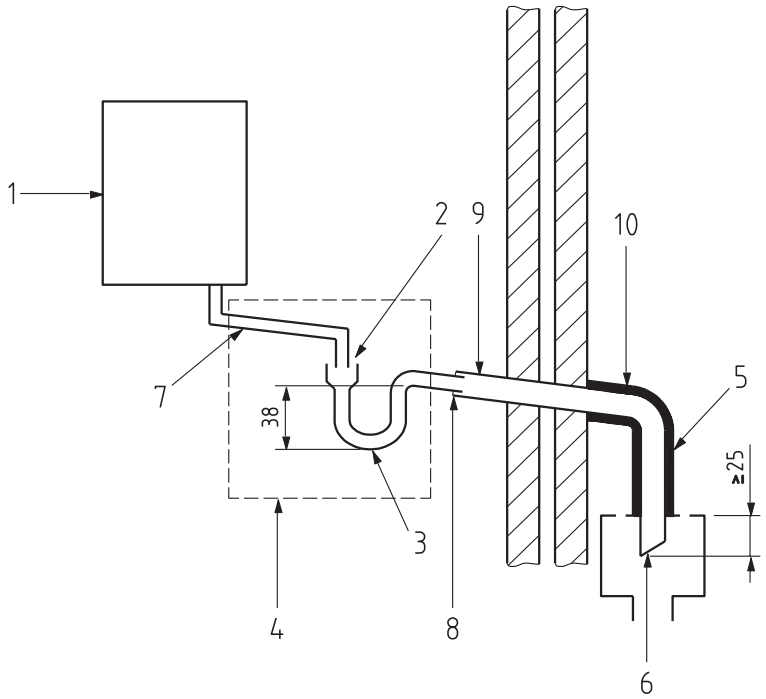


**Key**

1 Boiler
2 Visible air break
3 38 mm minimum trap
4 Visible air break and trap not required if there is a trap with a minimum condensate seal of 38 mm incorporated into the boiler
5 External length of pipe 3 m maximum
6 Open end of condensate drainage pipe direct into gully 25 mm min below grating but above water level; end cut at 45 °
7 Minimum internal diameter 19 mm
8 Pipe size transition point
9 Minimum internal diameter 30 mm
10 Water/weather proof insulation

**Figure 7 – Example of a purpose-made soakaway**

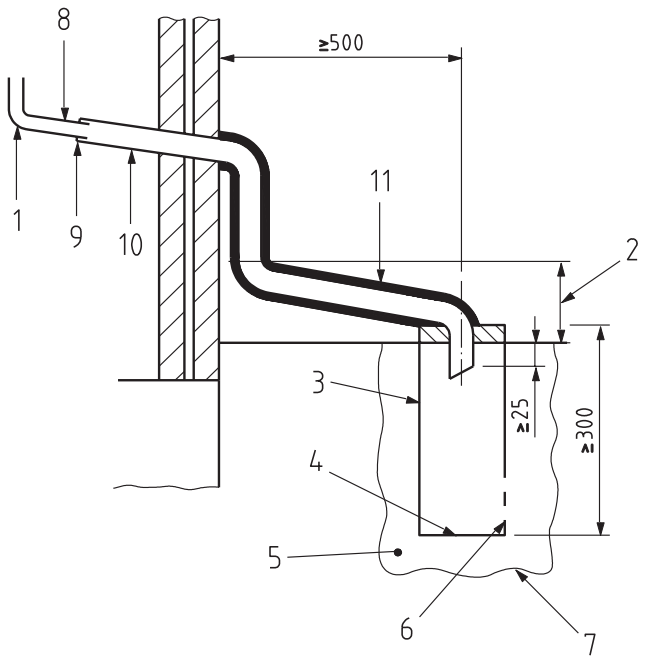


**Key**

1 Condensate discharge pipe from boiler
2 Ground (this section of the condensate drainage pipe may be run either above or below ground level); End cut at 45 °
3 Diameter 100 mm minimum plastic tube
4 Bottom of tube sealed
5 Limestone chippings
6 Two rows of three 12 mm holes at 25 mm centres, 50 mm from bottom of tube and facing away from house
7 Hole depth 400 mm minimum by 300 mm diameter
8 Minimum internal diameter 19 mm
9 Pipe size transition point
10 Minimum internal diameter 30 mm
11 Water/weather proof insulation

# 9 APPENDIX 2

**FLOWCHART FOR CO AND COMBUSTION RATIO CHECK ON COMMISSIONING A CONDENSING BOILER**

**PRIOR TO CO AND COMBUSTION RATIO CHECK**

The installation instructions should have been followed, gas type verified and gas supply pressure/rate checked as required prior to commissioning.

As part of the installation process, **ESPECIALLY WHERE A FLUE HAS BEEN FITTED BY PERSONS OTHER THAN THE BOILER INSTALLER**, visually check the integrity of the whole flue system to confirm that all components are correctly asembled, fixed and supported. Check that manufacturer's maximum flue lengths have not been exceeded and all guidance has been followed (e.g. Gas Safe Technical Bulletin TB008).

The flue gas analyser should be of the correct type, as specified by BS 7967

Prior to its use, the flue gas analyser should have been maintained and calibrated as specified by the manufacturer. The installer must have the relevant competence for use of the analyser.

Check and zero the analyser IN FRESH AIR as per analyser manufacturer's instructions.

**NOTE**

**the air gas ratio valve is factory-set and must not be adjusted DURING COMMISSIONING unless this action is recommended after discussions with SIME LTD.**

**If any such adjustment is recommended and further checking of the boiler is required the installer/service engineer must be competent to carry out this work and to use the flue gas analyser accordingly.**

**If the boiler requires conversion to operate with a different gas family (e.g. conversion from natural gas to LPG) separate guidance will be provided by the boiler manufacturer and must be followed.**

**SET BOILER TO MAXIMUM RATE**

Set the boiler to operate at maximum rate (full load condition). Allow sufficient time for combustion to stablilise.

**NOTE - Do not insert analyser probe during this period to avoid possible "flooding" of sensor.**

**CARRY OUT FLUE INTEGRITY CHECK USING ANALYSER**

Insert analyser probe into the air inlet test point and allow readings to stabilise.

**NOTE - The flue must always be installed with flue test point. This will be located within the first piece connected to the boiler.**

**Is $O_2$ less than or equal to 20.6% and $CO_2$ less than 0.2%**

NO

YES

**VERIFY FLUE INTEGRITY**

Analyser readings indicate that combustion products and inlet air must be mixing. Further investigation of the flue is therefore required.

Check that flue components are assembled, fixed and supported as per boiler/flue manufacturer's instructions.

Check that flue and flue terminal are not obstructed.

**Is $O_2$ less than or equal to 20.6% and $CO_2$ less than 0.2%**

YES

NO

Turn off appliance and call SIME LTD Technical HelpIlne for advice.

the appliance must not be commissioned or used, until problems are identified and resolved.

**CHECK CO AND COMBUSTION RATIO AT MAXIMUM RATE**

With boiler still set at maximum rate, insert analyser probe into flue gas samplng point. Allow readings to stablise before recording.

**Is CO less than 350ppm AND $CO/CO_2$ ratio less than 0.004**

NO

Check all seals around the appliance burner, internal flue seals, door and case seals. Rectify where necessary.

**Is CO less than 350ppm AND $CO/CO_2$ ratio less than 0.004**

YES

YES

NO

**Turn off appliance and call SIME LTD Technical HelpIlne for advice.**

**the appliance must not be commissioned or used until problems are identified and resolved.**

**NOTE**

**Check and record CO and combustion ratio at both maximum AND minimum rate before contacting SIME LTD.**

**SET BOILER TO MINIMUM RATE**

In accordance with boiler instructions, set boiler to operate at minimum rate (to minimum load condition). Allow sufficient time for combustion to stablilise.

**NOTE: If manufacturer's instructions do not specify how to set boiler to minimum rate contact Technical Helpline for advice.**

**CHECK CO AND COMBUSTION RATIO AT MINIMUM RATE**

With boiler set at minimum rate, insert analyser probe into flue gas samplng point. Allow readings to stablise before recording.

**NOTE - if no flue gas sampling point is present and the correct procedure is not specified in the manual, contact SIME LTD Technical Helpline for advice.**

**Is CO less than 350ppm AND $CO/CO_2$ ratio less than 0.004**

NO

YES

**BOILER IS OPERATING SATISFACTORILY**

**no further actions required**

**Ensure test points are capped, boiler case is correctly repleced and all other commissioning procedures are completed.**

**Complete Benchmark Checklist, recording CO and combustion ratio readings as required.**

Cod. 6318136 - 10/2013 - Documentation Dpt.

**Sime Ltd**
1a Blue Ridge Park
Thunderhead Ridge
Glasshoughton, Castleford, WF10 4UA

Phone: 0845 9011114
Fax: 0845 9011115

www.sime.co.uk
Email: enquiries@sime.co.uk