6322847 - 07/2015 - R1

UK

Condensing wall mounted boiler

# MURELLE PRO HE ErP

## USER, INSTALLATION AND SERVICING INSTRUCTIONS

**ENSURE THAT THESE INSTRUCTIONS ARE LEFT FOR THE USER AFTER COMPLETION OF THE BENCHMARK SECTION**

**PLEASE READ THE IMPORTANT NOTICE WITHIN THIS GUIDE REGARDING YOUR BOILER WARRANTY**

GAS safe REGISTER 199838

energy saving trust endorsed product

benchmark COLLECTIVE MARK
THE MARK OF QUALITY FOR THE INSTALLATION, COMMISSIONING AND SERVICING OF DOMESTIC HEATING AND HOT WATER SYSTEMS

WRAS
WATER REGULATIONS ADVISORY SCHEME

sime®

BOILER DETAILS

please position here a sticker
from installation pack

**IMPORTANT NOTICE**

For the first year all of our appliances are protected by our manufacturer's guarantee which covers both parts and labour.
As you would expect from Sime Ltd, it is our aim to provide our valued customers with the best in after sales and service.
To take advantage of any extended warranty offered, all you have to do is to adhere to these 3 simple conditions:

- The installation must be carried out to Manufacturers/Benchmark Standards by a Gas Safe Registered Engineer, and recorded in the installation manual.
- The appliance must be registered with both Sime Ltd and Gas Safe within 30 days of installation.
- The appliance must be serviced every 12 months, within 30 days of the anniversary of the installation date, by either Sime Ltd or a Gas Safe registered engineer- ensuring that the Benchmark service record in the installation manual is completed.

Failure to comply with the above will result in only the 12 month warranty being offered.In the absence of any proof of purchase, the 12 month warranty period will commence from the date of manufacture of the boiler as shown on the appliance data plate.

## SAFE HANDLING

This boiler may require 2 or more operatives to move it into its installation site, remove it from its packaging and during movement into its installation location. Manoeuvring the boiler may include the use of a sack truck and involve lifting pushing and pulling.
Caution should be exercised during these operations.

Operatives should be knowledgeable in handling techniques when performing these tasks and the following precautions should be considered:
- Grip the boiler at the base
- Be physically capable
- Use personal protective equipment as appropriate e.g. gloves, safety footwear.

During all manoeuvres and handling actions, every attempt should be made to ensure the following unless unavoidable and/or the weight is light.
- Keep back straight
- Avoid twisting at the waist
- Always grip with the palm of the hand
- Keep load as close to the body as possible
- Always use assistance

**WARNING**
Caution should be exercised when performing any work on this appliance.
Protective gloves and safety glasses are recommended.
- Avoid direct contact with sharp edges.
- Avoid contact with any hot surfaces.

**NOTICE**
Please be aware that due to the wet testing of the appliance, there may some residual water in the hydraulic circuit.
- Protect any surfaces, carpets or floorings.
- Use a suitable container to catch any water that escape when removing the protective caps from the connections.

All descriptions and illustrations provided in this manual have been carefully prepared but we reserve the right to make changes and improvements in our products that may affect the accuracy of the information contained in this manual.

# Code Of Practice

For the installation, commissioning and servicing of domestic heating and hot water products

Benchmark places responsibilities on both manufacturers and installers.* The purpose is to ensure that customers** are provided with the correct equipment for their needs, that it is installed, commissioned and serviced in accordance with the manufacturer's instructions by competent persons and that it meets the requirements of the appropriate Building Regulations. Installers are required to carry out work in accordance with the following:

## Standards of Work

- Be competent and qualified to undertake the work required.
- Install, commission, service and use products in accordance with the manufacturer's instructions provided.
- Ensure that where there is responsibility for design work, the installation is correctly sized and fit for purpose.
- Meet the requirements of the appropriate Building Regulations. Where this involves notifiable work be a member of a Competent Persons Scheme or confirm that the customer has notified Local Authority Building Control (LABC), prior to work commencing.
- Complete all relevant sections of the Benchmark Checklist/Service Record when carrying out commissioning or servicing of a product or system.
- Ensure that the product or system is left in a safe condition and, whenever possible, in good working order.
- Highlight to the customer any remedial or improvement work identified during the course of commissioning or servicing work.
- Refer to the manufacturer's helpline where assistance is needed.
- Report product faults and concerns to the manufacturer in a timely manner.

## Customer Service

- Show the customer any identity card that is relevant to the work being carried out prior to commencement or on request.
- Give a full and clear explanation/demonstration of the product or system and its operation to the customer.
- Hand over the manufacturer's instructions, including the Benchmark Checklist, to the customer on completion of an installation.
- Obtain the customer's signature, on the Benchmark Checklist, to confirm satisfactory demonstration and receipt of manufacturer's instructions.
- Advise the customer that regular product servicing is needed, in line with manufacturers' recommendations, to ensure that safety and efficiency is maintained.
- Respond promptly to calls from a customer following completion of work, providing advice and assistance by phone and, if necessary, visiting the customer.
- Rectify any installation problems at no cost to the customer during the installer's guarantee period.

benchmark COLLECTIVE MARK
THE MARK OF QUALITY FOR THE INSTALLATION, COMMISSIONING AND SERVICING OF DOMESTIC HEATING AND HOT WATER SYSTEMS

*The use of the word "installer" is not limited to installation itself and covers those carrying out installation, commissioning and/or servicing of heating and hot water products, or the use of supporting products (such as water treatment or test equipment).
**Customer includes householders, landlords and tenants.

© Heating and Hotwater Industry Council (HHIC)

www.centralheating.co.uk

## The Benchmark Scheme

Sime Ltd is a licensed member of the Benchmark Scheme which aims to improve the standards of installation and commissioning of domestic heating and hot water systems in the UK and to encourage regular servicing to optimise safety, efficiency and performance.
Benchmark is managed and promoted by the Heating and Hotwater Industry Council.
For more information visit www.centralheating.co.uk.
Please ensure that the installer has fully completed the Benchmark Checklist in the use and maintenance section of the installation instructions supplied with the product and that you have signed it to say that you have received a full and clear explanation of its operation.
The installer is legally required to complete a commissioning checklist as a means of complyng with the appropriate Building Regulations (England and Wales).
All installations must be notified to Local Area Building Control either directly or through a Competent Persons Scheme.
A Building Regulations Compliance Certificate will then be issued to the customer who should, on receipt, write the Notification Number on the Benchmark Checklist.
This product should be serviced regularly to optimise its safety, efficiency and performance.
The service engineer should complete the relevant Service Record on the Benchmark Checklist after each service.
The Benchmark Checklist may be required in the event of any warranty work and as supporting documentation relating to home improvements in the optional documents section of the Home Information Pack.

**Important Information**
IT IS A STATUTORY REQUIREMENT THAT ALL GAS APPLIANCES ARE INSTALLED BY COMPETENT PERSONS, IN ACCORDANCE WITH THE GAS SAFETY (INSTALLATION AND USE) REGULATIONS (CURRENT EDITION). The manufacturer's instructions must not be taken as overriding any statutory requirements, and failure to comply with these regulations may lead to prosecution.

No modifications to the appliance should be made unless they are fully approved by the manufacturer.

**GAS LEAKS:** DO NOT OPERATE ANY ELECTRICAL SWITCH, OR USE A NAKED FLAME. TURN OFF THE GAS SUPPLY AND VENTILATE THE AREA BY OPENING DOORS AND WINDOWS CONTACT THE GAS EMERGENCY SERVICE ON 0800111999.

benchmark
COLLECTIVE MARK
THE MARK OF QUALITY FOR THE INSTALLATION, COMMISSIONING AND SERVICING OF DOMESTIC HEATING AND HOT WATER SYSTEMS

Please refer to commissioning instructions for filling in the checklist at the back of this installation guide.
Note: All Gas Safe registered installers carry a ID Card.
You can check your installer is Gas Safe Registered by calling 0800 408 5577

## SIME COMBINATION BOILERS
## Installer checklist

Please remember to carry out the following checks after installation. This will achieve complete customer satisfaction, and avoid unnecessary service calls. A charge will be made for a service visit where the fault is not due to a manufacturing defect.

- Has a correct by-pass been fitted and adjusted?
- Has the system and boiler been flushed?
- Is the system and boiler full of water, and the correct pressure showing on the pressure gauge?
- Is the Auto Air Vent open?
- **Has the pump been rotated manually?**
- Is the gas supply working pressure correct?
- Is the boiler wired correctly? (See installation manual).
- **Has the D.H.W. flow rate been set to the customer requirements?**
- Has the customer been fully advised on the correct use of the boiler, system and controls?
- Has the Benchmark Checklist in the use and maintenance section of this manual, been completed?

## SAFETY WARNINGS AND REGULATIONS

### WARNINGS

- After having unpacked the boiler ensure that it is undamaged and complete including the valve pack, hanging bracket and template.
- The appliance must be used as intended. **Sime Ltd** declines all responsible for any injury or damage to persons, animals,or property as a result of improper installation, adjustment, maintenance or use.
- In the event of water leaks, disconnect the appliance from the mains power supply, close the water mains and seek help from a qualified engineer.
- Periodically check that the operating pressure of the water heating system when cold is **1-1.2 bar**. If required, increase the pressure or seek help from a qualified engineer.
- If the appliance is not used for a long period of time, the following operations must be carried out:
  *- set the main isolation switch to "OFF";*
  *- close the gas and water valves for the water heating system.*
- To ensure continued efficient operation of the appliance it is recommended that it is serviced regularly, at least once a year. This is also a condition of the boiler warranty.
- It is the law that any service or repair is carried out by a Gas Safe Registered engineer.
- Services must be recorded in the maintenance section of this installation guide.

### WARNINGS

- **This manual** is an integral part of the appliance. It must therefore be kept for future reference and must always accompany the appliance in the event the appliance is transferred or sold to another Owner or User or is installed on another system.
- **Installation and maintenance** of this appliance must be carried out by a Gas Safe Registered Engineer in accordance with the instructions contained in the manual. On completing the installation the boiler should be commissioned and details recorded in the Benchmark section of this manual. This is a condition of the warranty

## RESTRICTIONS

### DO NOT

- Do not allow appliance to be used by children or unassisted disabled persons.
- Do not use electrical devices or appliances such as switches, electrical appliances etc if you can smell gas. If this should happen:
  *- open the doors and windows to air the room;*
  *- close the gas isolation device;*
  *- seek help from a qualified engineer.*
- Do not touch the appliance with bare feet or with any wet part of the body.
- Do not carry out any repair, maintenance or cleaning operation before having disconnected the appliance from the mains power by setting the main switch to "OFF", and closing the gas supply.
- Do not modify the safety or adjustment devices without authorization and instructions from the manufacturer.
- Do not block the condensate drain.
- Do not pull, detach or twist the electrical cables coming out of the appliance even if the appliance is disconnected from the mains power supply.
- Do not expose the boiler to atmospheric agents. These boilers can also be installed in partially covered areas, as per EN 15502, with a maximum ambient temperature of 60°C and a minimum ambient temperature of - 5°C. It is generally advisable to install the boilers below weathered roofs, on the balcony or in a protected niche, to protect them from exposure to weathering agents (rain, hail and snow). All boilers provide a standard antifreeze function.
- Do not block or reduce the size of the ventilation openings of the room where the appliance is installed, if present.
- Remove the mains power and gas supply from the appliance if the external temperature could fall below ZERO (risk of freezing).
- Do not leave containers with flammable substances in the room where the appliance is installed.
- Do not place or store items on or close to the appliance.

## SYMBOLS

### DANGER
To indicate actions which, if not carried out correctly, can result in injury of a general nature or may damage or cause the appliance to malfunction; these actions therefore require particular caution and adequate preparation.

### DANGER
To indicate actions which, if not carried out correctly, could lead to injury of an electrical nature; these actions therefore require particular caution and adequate preparation.

### DO NOT
To indicate actions which MUST NOT BE carried out.

### CAUTION
To indicate particularly important and useful information.

## RANGE

| MODEL | CODE | GAS COUNCIL NUMBER |
|---|---|---|
| Murelle Pro HE 25 ErP (Methane) | 8114220 | 47-283-49 |
| Murelle Pro HE 30 ErP (Methane) | 8114222 | 47-283-50 |

## COMPLIANCE

**Murelle Pro HE ErP** boilers comply with:
- Gas Appliances Directive 2009/142/EC
- Boiler Efficiency Directive 92/42/EEC
- Low Voltage Directive 2006/95/EC
- Electromagnetic Compatibility Directive 2004/108/EC
- Thermal Efficiency ★★★★
- Classified as "Condensing"
- Class NOx 5 (< 70 mg/kWh)

CE 1312

Please refer to the technical data plate for the serial number and year of manufacture.

## EC DECLARATION OF CONFORMITY

In accordance with "Gas Appliances" Directive 2009/142/EC, "Electromagnetic Compatibility" Directive 2004/108/EC, "Boiler Efficiency" Directive 92/42/EC and "Low Voltage" Directive 2006/95/EC, the manufacturer Fonderie SIME S.p.A., via Garbo 27, 37045 Legnago (VR), **DECLARES THAT** the boiler models **Murelle Pro HE ErP** comply with the European Directives.

**These appliances comply with the S.E.D.B.U.K. scheme, band "A".**

*The Technical Manager*
*(Franco Macchi)*

## MANUAL STRUCTURE

This manual is organized as follows.

# USER INSTRUCTIONS

TABLE OF CONTENTS 7

# DESCRIPTION OF THE APPLIANCE

TABLE OF CONTENTS 11

# INSTALLATION AND SERVICING INSTRUCTIONS

TABLE OF CONTENTS 19

# USER INSTRUCTIONS

## TABLE OF CONTENTS


1 OPERATING THE MURELLE PRO HE ErP 8
- 1.1 Control panel . . . 8
- 1.2 Preliminary checks . . . 8
- 1.3 Ignition . . . 9
- 1.4 Adjusting the delivery temperature . . . 9
- 1.5 Adjusting the domestic hot water temperature . . . 9
- 1.6 Fault / malfunction codes . . . 9

2 SHUTDOWN 10
- 2.1 Temporary shutdown . . . 10
- 2.2 Shutting down for long periods . . . 10

3 MAINTENANCE 10
- 3.1 Servicing . . . 10
- 3.2 External cleaning . . . 10
  - *3.2.1 Cleaning the case . . . 10*

4 DISPOSAL 10
- 4.1 Disposal of the equipment (European Directive 2002/96/CE . . . 10

# 1 OPERATING THE MURELLE PRO HE ErP

## 1.1 Control panel

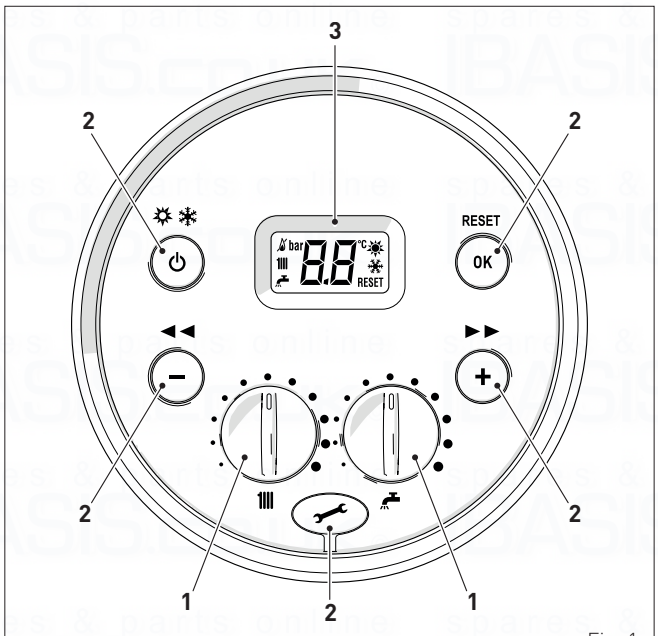

Fig. 1

### 1 KNOBS

The heating knob allows the user to set the heating temperature to between 20 and 80°C during normal operation (Default PAR tS1.3 / 1.4).

The domestic hot water knob allows the user to set the domestic hot water temperature to between 10 and 60°C during normal operation.

### 2 FUNCTIONAL BUTTONS

Press for more than one second and release to step through the operating modes (Stand-by – Summer – Winter).

– This allows the engineer to scroll through the parameters or decrease the values.

+ This allows the engineer to scroll through the parameters or increase the values.

OK This allows the engineer to confirm the selected parameter or to modify the value or to reset the appliances from a lockout failure.

Programming connector cover plug.

***NB:** pressing any one of these buttons for more than 30 seconds generates a fault on the display without preventing boiler operation. The warning disappears when the button is released.*

### 3 DISPLAY

**"SUMMER"**. This symbol appears when the boiler is operating in Summer mode or if only the domestic hot water mode is enabled via the remote control. If the symbols and are flashing, this indicates that the chimney sweep function is active.

**"WINTER"**. This symbol appears when the boiler is operating in Winter mode or if both the domestic hot water and heating modes are enabled via the remote control. With dedicated remote controls CR or Home, if no operating modes have been enabled both symbols and will be off.

RESET **"RESET REQUIRED"**. This message only appears if there is a malfunction which must be or may be restored manually.

**"DOMESTIC HOT WATER"**. This symbol is present during a request for DHW or when the chimney sweep function is operating; it flashes during the domestic hot water set point selection.

**"HEATING"**. This symbol is present during heating operation or when the chimney sweep function is operating; it flashes during the heating set point selection.

**"LOCKOUT" DUE TO NO FLAME**.

**"FLAME LIT"**.

AL **"ALARM"**. This indicates that a fault has occurred. The number specifies the cause which generated the alarm (see section "**Fault / malfunction codes**".

## 1.2 Preliminary checks

Prior to use the **Murelle Pro HE ErP** boiler must be installed and commissioned by a Gas Safe Registered engineer. It may be necessary for the user to occasionally have to start the boiler, for instance after a holiday or after an interruption of the gas supply. In these cases the following operations must be carried out.

- check that the gas isolation and water system valves are open
- using the pressure gauge (1) check that the pressure in the heating system, when cold, is **1-1.2 bar**. If the pressure is less than this use the external filling device to repressurise the system to **1-1.2 bar**
- ensure that the filling device is turned off after use.

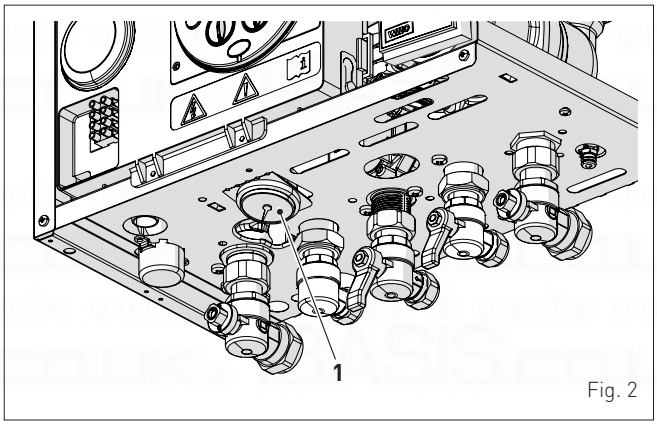

Fig. 2

## 1.3 Ignition

After having carried out the preliminary checks, proceed as follows:

- set the main system switch to "ON"
- on the display, check that the operating mode on the display is "SUMMER" and if necessary select it by pressing and holding the button for at least 1 second. The internal temperature of the boiler will appear on the display

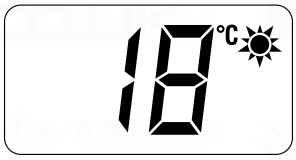


- open one or more than one hot water tap. The should appear on the display and the boiler will ignite and stay alight until the tap is turned off.

Once the boiler has been operated in "SUMMER mode" "WINTER mode" can be selected by pressing and holding the button for at least 1 second. The internal temperature of the boiler will appear on the display. Ensure that any timers and room thermostats are in the on position. The will appear on the display and the boiler will ignite.

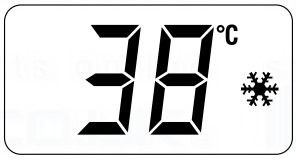


## 1.4 Adjusting the delivery temperature

The temperature of the heating water can be adjusted by turning the knob on the control panel.

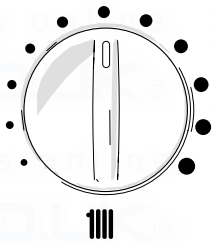

Fig. 3

## 1.5 Adjusting the domestic hot water temperature

The temperature of the domestic hot water can be adjusted by turning the knob on the control panel.

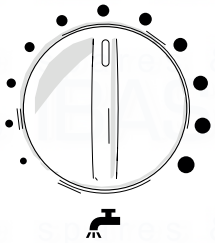

Fig. 4

## 1.6 Fault / malfunction codes

If a fault/malfunction is detected during boiler operation, the message **"AL"** will appear on the display followed by the fault code (eg. **"06"** - no flame detected).
If the message **"RESET"** also appears, press and hold the button **OK** RESET for more than 3 seconds and check that the normal operating condition is restored.

If this operation is not successful, **ONLY ONE MORE ATTEMPT** can be made, therefore:

- close the gas cock
- isolate the power supply
- contact the Qualified Technical Personnel.

**CAUTION**
The table with the fault codes and the corresponding description is provided in the specific section of the INSTALLATION AND SERVICING INSTRUCTIONS.

# 2 SHUTDOWN

## 2.1 Temporary shutdown

To temporarily interupt the boiler operation press and hold the button ⏻ for at least one second, once if in "WINTER mode" ❄ or twice if in "SUMMER mode" ☀. **"- -"** will appear on the display the boiler will be in STAND-BY. The boiler anti freeze function will be enabled.

**DANGER**
The boiler will still be powered.

**CAUTION**
If the outside temperature might fall below ZERO, since the appliance is equipped with an "antifreeze function"

- ONLY PUT THE BOILER INTO STAND-BY
- leave the main system switch set to "ON" (boiler is powered)
- leave the gas cock open.

## 2.2 Shutting down for long periods

If the boiler is to be left unused for a long period, the following operations need to be carried out:

- press and hold the button ⏻ for at least 1 second, once if in "WINTER mode" ❄ or twice if in "SUMMER mode" ☀ to put the boiler into stand-by **"- -"** will appear on the display

- isolate the power supply
- isolate the gas cock
- close the heating and domestic hot water isolation valves
- drain the heating and domestic hot water system if there is the risk of freezing.

**CAUTION**
Contact the Qualified Technical Personnel if the procedure described above cannot be easily carried out.

# 3 MAINTENANCE

## 3.1 Servicing

As a condition of the warranty and to ensure correct operation and efficiency, it is important that the boiler is serviced every 12 months, within 30 days of the anniversary of the installation date ensure the required information is recorded in the Gas Boiler System Commissioning Checklist (Benchmark).

**CAUTION**
Maintenance interventions must ONLY be carried out by professionally qualified personnel who will follow the indications provided in the INSTALLATION AND MAINTENANCE MANUAL.

## 3.2 External cleaning

### 3.2.1 Cleaning the case

When cleaning the cladding, use a cloth dampened with soap and water or alcohol for stubborn marks.

**DO NOT**
Do not use abrasive products.

# 4 DISPOSAL

## 4.1 Disposal of the equipment (European Directive 2002/96/CE

Once it reaches the end of its operating life, the equipment MUST BE RECYCLED in line with current legislation.
IT MUST NOT be disposed of together with urban waste.
It can be handed over to recycling centres, if there are any, or to retailers that offer this service.
Recycling prevents potential damage to the environment and health. It allows to recover a number of recyclable materials, with considerable savings in terms of money and energy.

# DESCRIPTION OF THE APPLIANCE

## TABLE OF CONTENTS


5 DESCRIPTION OF THE APPLIANCE 12
- 5.1 Characteristics . . . . . 12
- 5.2 Check and safety devices . . . . . 12
- 5.3 Identification . . . . . 12
  - *5.3.1 Technical Data Plate . . . . . 13*
- 5.4 Structure . . . . . 14
- 5.5 Technical features . . . . . 15
- 5.6 Main water circuit . . . . . 16
- 5.7 Sensors . . . . . 16
- 5.8 Expansion vessel . . . . . 16
- 5.9 Circulation pump . . . . . 17
- 5.10 Control panel . . . . . 17
- 5.11 Wiring diagram . . . . . 18

# 5 DESCRIPTION OF THE APPLIANCE

## 5.1 Characteristics

**Murelle Pro HE ErP** are condensing wall mounted boilers which **Sime Ltd** has produced for installation into domestic properties for heating and hot water production. The main design choices made by **Sime Ltd** for the **Murelle Pro HE ErP** boilers are:

- the total pre-mix microflame burner combined with a steel heat exchanger for heating and a rapid heat exchanger for DHW
- room sealed, Type C appliance. Suitable for use on sealed heating systems
- the command and control microprocessor electronic board provides efficient management of both heating and hot water production. It can also be connected to a external sensor. If connected to an external sensor, the boiler temperature varies on the basis of the external temperature according to a selected optimal climatic curve providing significant energy and economic savings.

Other special features of the **Murelle Pro HE ErP** boilers are:

- the anti-freeze function which activates automatically if the temperature of the water inside the boiler falls below the threshold of the value set at parameter "tS 1.0" and , if there is an external sensor, if the external temperature falls below the threshold of the value set at parameter "tS 1.1".
- anti jamming function of the pump. This activates automatically every 24 hours if no request for heat has been made
- the chimney sweep function lasts 15 minutes and makes the job of the qualified technician easier when measuring the parameters and combustion efficiency
- screen display of the operating and self-diagnostic parameters with error code display when the fault occurs. This makes repair interventions easier and allows appliance operation to be restored correctly.

## 5.2 Check and safety devices

The **Murelle Pro HE ErP** boilers are equipped with the following check and safety devices:

- thermal safety thermostat 100°C
- 3 bar relief valve
- heating water pressure switch
- delivery sensor (SM)
- DHW sensor (SS)
- exhaust sensor (SF).

**DO NOT**
Do not commission or operate the appliance with safety devices which do not work or which have been tampered with.

**DANGER**
Safety device may only be replaced by professional qualified personnel using **Sime Ltd** original spare parts.

## 5.3 Identification

The **Murelle Pro HE ErP** boilers can be identified by means of:

1 **Packaging label:** this is located on the outside of the packaging and provides a code, the serial number of the boiler and the bar code
2 **Energy Efficiency Label:** this is positioned on the outside of the packaging to notify the User of the level of energy savings and reduced environmental pollution produced by the appliance
3 **Technical Data Plate:** this is located inside the front panel of the boiler and provides the technical specification, appliance performance and any other information required by law.

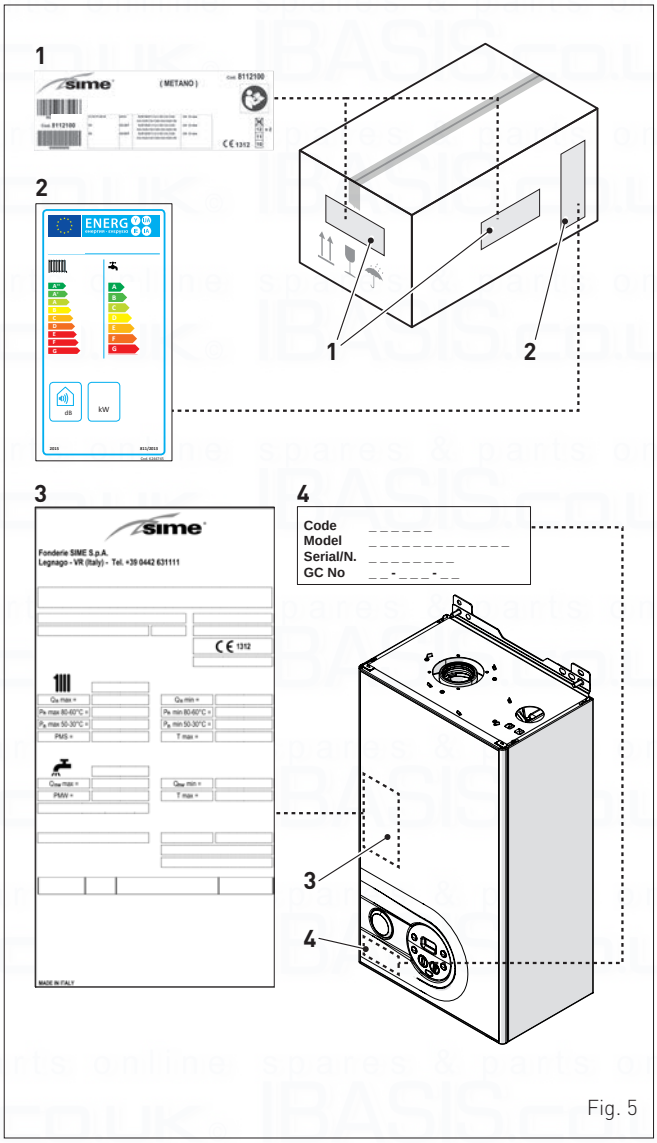

Fig. 5

*KEY:*
1 *Packaging label*
2 *Energy Efficiency Label*
3 *Technical Data Plate*
4 *Steaker of product identification*

### 5.3.1 Technical Data Plate

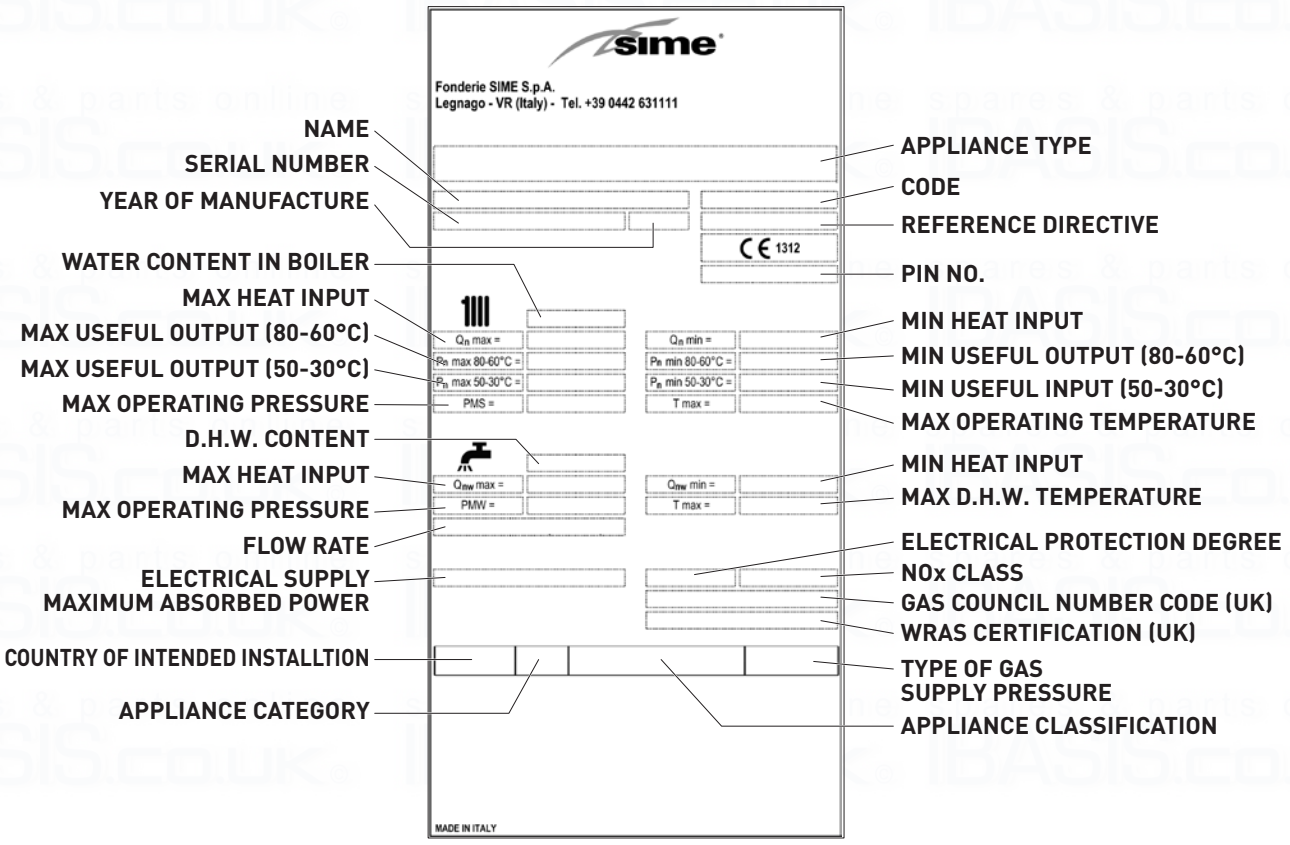


Fig. 6

**CAUTION**
Tampering with, removing or failing to display the identification plate or carrying out any other operation which does not allow safe identification of the product or which may hinder installation and maintenance operations.

## 5.4 Structure

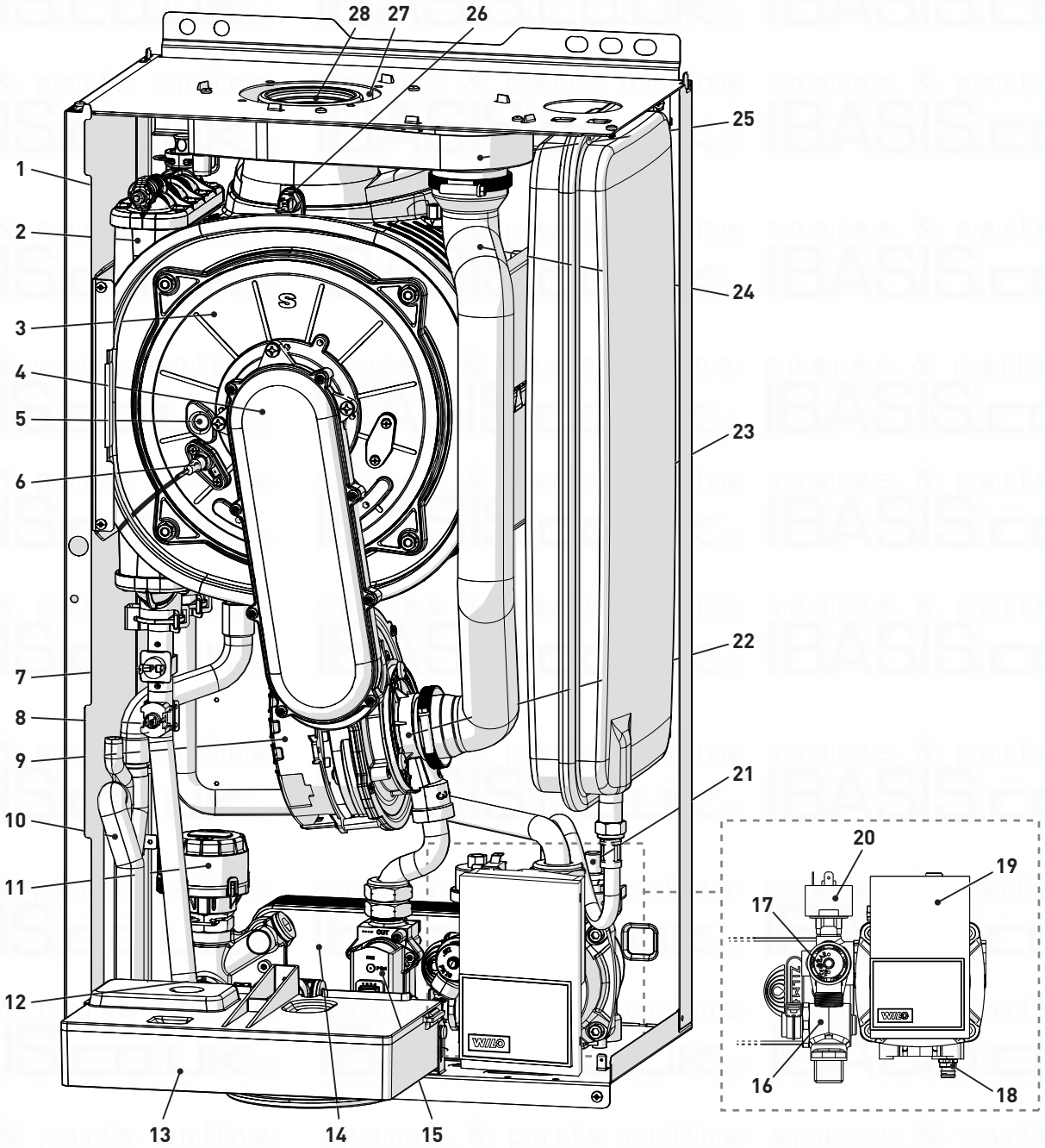


1 *Heat exchanger bleed point*
2 *Heat exchanger*
3 *Combustion chamber door*
4 *Air/gas duct*
5 *Flame viewing window*
6 *Ignition/detection electrode*
7 *Safety thermostat (TS)*
8 *Delivery sensor (SM)*
9 *Fan*
10 *Condensate siphon*
11 *Diverter valve*
12 *Domestic hot water sensor (SS)*
13 *Control panel*
14 *Domestic hot water heat exchanger*
15 *Gas valve*
16 *Domestic hot water filter*
17 *System relief valve*
18 *Boiler drain*
19 *Pump*
20 *Water pressure switch*
21 *Automatic bleed valve*
22 *Air-gas mixer*
23 *Expansion vessel*
24 *Air inlet pipe*
25 *Air-smoke chamber*
26 *Exhaust sensor (SF)*
27 *Air inlet*
28 *Exhaust outlet*

Fig. 7

## 5.5 Technical features

| DESCRIPTION | | Murelle Pro HE ErP | |
|---|---|---|---|
| | | 25 | 30 |
| **CERTIFICATIONS** | | | |
| **Country of intended installation** | | GB | |
| **Fuel** | | G20 /G31 | |
| **PIN number (CE)** | | 1312CP5936 | |
| **Category** | | II2H3P | |
| **Type** | | C13 - C33 | |
| **Class $NO_x$** | | 5 (< 70 mg/kWh) | |
| **HEATING PERFORMANCE** | | | |
| **(*) HEAT INPUT** | | | |
| **Nominal flow [Qn max]** | kW | 20 | 24 |
| **Minimum flow [Qn min]** | kW | 4.0 | 4.8 |
| **HEAT OUTPUT** | | | |
| **Nominal (80-60°C) [Pn max]** | kW | 19.7 | 23.6 |
| **Nominal (50-30°C) [Pn max]** | kW | 21.4 | 25.7 |
| **Minimum G20 (80-60°C) [Pn min]** | kW | 3.9 | 4.7 |
| **Minimum G20 (50-30°C) [Pn min]** | kW | 4.3 | 5.1 |
| **Minimum G31 (80-60°C) [Pn min]** | kW | 3.9 | 4.7 |
| **Minimum G31 (50-30°C) [Pn min]** | kW | 4.3 | 5.1 |
| **EFFICIENCY** | | | |
| **Max useful efficiency (80-60°C)** | % | 98.5 | 98.3 |
| **Min useful efficiency (80-60°C)** | % | 97.5 | 97.9 |
| **Max useful efficiency (50-30°C)** | % | 107.0 | 107.1 |
| **Min useful efficiency (50-30°C)** | % | 106.0 | 106.3 |
| **Useful efficiency at 30% of load (40-30°C)** | % | 107.0 | 107.0 |
| **Thermal efficiency (EEC 92/42)** | | ★★★★ | |
| **Losses after shutdown at 50°C** | W | 84 | 88 |
| **DOMESTIC HOT WATER PERFORMANCE** | | | |
| **Nominal heat input [Qn max]** | kW | 24 | 28 |
| **Minimum heat input [Qn min]** | kW | 4 | 4.8 |
| **Specific D.H.W. flow rate Δt 30°C (EN 13203)** | l/min | 11.2 | 12.9 |
| **Continuous D.H.W. flow rate (Δt 25°C / Δt 35°C)** | l/min | 13.6 / 9.7 | 16.1 / 11.5 |
| **Minimum D.H.W. flow rate** | l/min | 2 | 2 |
| **Max [PMW] / Min pressure** | bar | 6 / 0.5 | 6 / 0.5 |
| | kpa | 600 / 50 | 600 / 50 |
| **ENERGY PERFORMANCE** | | | |
| **HEATING** | | | |
| **Heating seasonal energy efficiency class** | | A | A |
| **Heating seasonal energy efficiency** | % | 92 | 91 |
| **Sound power** | db(A) | 54 | 56 |
| **DOMESTIC HOT WATER** | | | |
| **Domestic hot water energy efficiency class** | | A | A |
| **Domestic hot water energy efficiency** | % | 80 | 80 |
| **Stated domestic hot water profile load** | | XL | XL |
| **ELECTRICAL SPECIFICATIONS** | | | |
| **Power supply voltage** | V | 230 | |
| **Frequency** | Hz | 50 | |
| **Absorbed electrical power Qn max** | W | 70 | 85 |
| **Absorbed electrical power Qn min** | W | 52 | 52 |
| **Absorbed electrical power in stand-by** | W | 3,6 | 3,6 |
| **Electrical protection degree** | IP | X5D | |
| **COMBUSTION DATA** | | | |
| **Smoke temperature at Max/Min flow (80-60°C)** | °C | 82 / 66 | 77 / 67 |
| **Smoke temperature at Max/Min flow (50-30°C)** | °C | 59 / 45 | 58 / 49 |
| **Maximum smoke flow Min/Max** | g/s | 11.2 / 1.9 | 16.3 / 2.8 |
| **$CO_2$ at Max/Min flow rate (G20)** | % | 9.0 / 9.0 | 9.0 / 9.0 |
| **$CO_2$ at Max/Min flow rate (G31)** | % | 10.0 /10.0 | 10.0 /10.0 |
| **NOx measured** | mg/kWh | 39.0 | 41.0 |
| **NOZZLES - GAS** | | | |
| **Number of nozzles** | No. | 1 | 1 |
| **Nozzle diameter (G20-G31)** | mm | 5.3 | 5.3 |
| **Gas consumption at Max/Min flow rate (G20)** | $m^3/h$ | 2.53 / 0.42 | 2.96 / 0.63 |
| **Gas consumption at Max/Min flow rate (G31)** | Kg/h | 1.86 / 0.31 | 2.71 / 0.46 |

| | | |
|---|---|---|
| **Gas supply pressure (G20/G31)** | mbar | 20 / 37 |
| | kpa | 2 / 3.7 |
| **TEMPERATURE - PRESSURE** | | |
| **Max operating temperature** | °C | 85 |
| **Heating adjustment range** | °C | 20÷80 |
| **Domestic hot water adjustment range** | °C | 10÷60 |
| **Max operating pressure** | bar | 3 |
| | kpa | 300 |
| **Water content in boiler** | l | 4.7 |

*(*) Heat input calculated using the lower heat output (Hi)*
*Lower Heat Output (Hi)*
***G20 Hi.*** *9.45 kW/m³ (15°C, 1013 mbar) -* ***G31 Hi.*** *12.87 kW/kg (15°C, 1013 mbar)*

## 5.6 Main water circuit

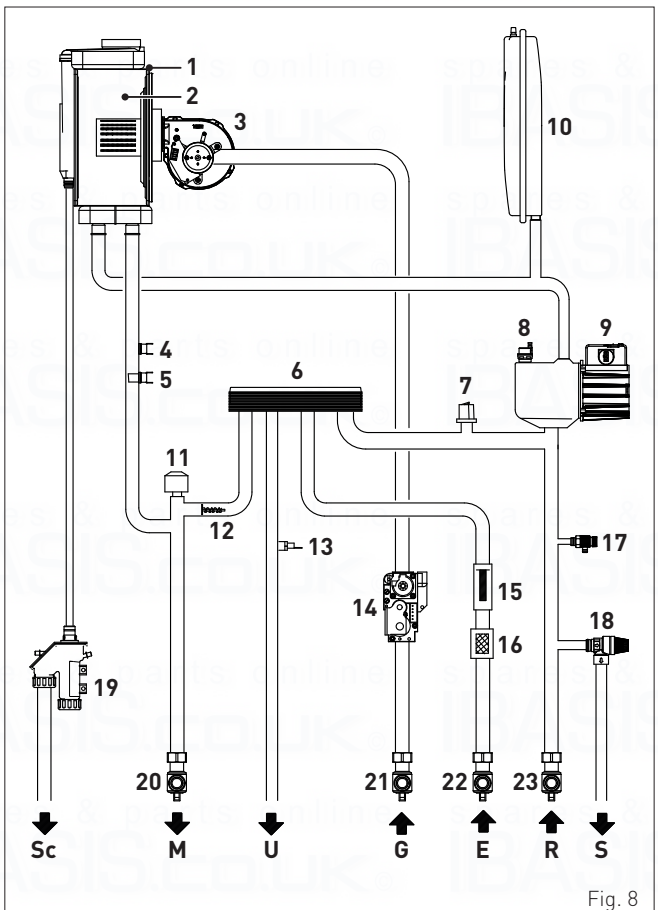

Fig. 8

*KEY:*
*M System flow*
*R System return*
*U Domestic hot water outlet*
*E Domesti hot water inlet*
*S Safety valve outlet*
*G Gas supply*
*Sc Condensate outlet*

**1** *Condensing heat exchanger*
**2** *Combustion chamber*
**3** *Fan*
**4** *Thermal safety thermostat (TS)*
**5** *Delivery sensor (SM)*
**6** *Domestic hot water heat exchanger*
**7** *Water pressure switch*
**8** *Automatic bleed valve*
**9** *Pump*
**10** *System expansion vessel*
**11** *Diverter valve*
**12** *Automatic by-pass*
**13** *Domestic hot water sensor (SS)*
**14** *Gas valve*
**15** *Domestic hot water flow meter*
**16** *Domestic hot water filter*
**17** *Boiler drain*
**18** *System relief valve*
**19** *Condensate siphon outlet*
**20** *System flow cock*
**21** *Gas cock*
**22** *Domestic hot water inlet cock*
**23** *System return cock*

## 5.7 Sensors

The sensors installed have the following characteristics:
- Dual sensor (thermal safety/output) NTC R25°C; 10kΩ
- domestic hot water sensor NTC R25°C; 10kΩ
- external sensor NTC R25°C; 10kΩ

**Correspondence of Temperature Detected/Resistance**
*Examples of reading:*
*TR=75°C → R=1925Ω*
*TR=80°C → R=1669Ω.*

| TR | 0°C | 1°C | 2°C | 3°C | 4°C | 5°C | 6°C | 7°C | 8°C | 9°C | |
|---|---|---|---|---|---|---|---|---|---|---|---|
| 0°C | 27279 | 26135 | 25044 | 24004 | 23014 | 22069 | 21168 | 20309 | 19489 | 18706 | Resistance R (Ω) |
| 10°C | 17959 | 17245 | 16563 | 15912 | 15289 | 14694 | 14126 | 13582 | 13062 | 12565 | |
| 20°C | 12090 | 11634 | 11199 | 10781 | 10382 | 9999 | 9633 | 9281 | 8945 | 8622 | |
| 30°C | 8313 | 8016 | 7731 | 7458 | 7196 | 6944 | 6702 | 6470 | 6247 | 6033 | |
| 40°C | 5828 | 5630 | 5440 | 5258 | 5082 | 4913 | 4751 | 4595 | 4444 | 4300 | |
| 50°C | 4161 | 4026 | 3897 | 3773 | 3653 | 3538 | 3426 | 3319 | 3216 | 3116 | |
| 60°C | 3021 | 2928 | 2839 | 2753 | 2669 | 2589 | 2512 | 2437 | 2365 | 2296 | |
| 70°C | 2229 | 2164 | 2101 | 2040 | 1982 | 1925 | 1870 | 1817 | 1766 | 1717 | |
| 80°C | 1669 | 1622 | 1577 | 1534 | 1491 | 1451 | 1411 | 1373 | 1336 | 1300 | |
| 90°C | 1266 | 1232 | 1199 | 1168 | 1137 | 1108 | 1079 | 1051 | 1024 | 998 | |
| 100°C | 973 | | | | | | | | | | |

## 5.8 Expansion vessel

The expansion vessel installed on the boilers has the following characteristics:

| Description | U/M | Murelle Pro HE ErP | |
|---|---|---|---|
| | | 25 | 30 |
| Total capacity | l | 9,0 | |
| Prefilling pressure | kPa | 100 | |
| | bar | 1,0 | |
| Useful capacity | l | 5,0 | |
| Maximum system content (*) | l | 124 | |

*(*) Conditions of:*
*Average maximum temperature of the system 85°C*
*Start temperature at system filling 10°C.*

**CAUTION**

- For systems with water content exceeding the maximum system content (as indicated in the table) an additional expansion vessel must be fitted.
- The difference in height between the relief valve and the highest point of the system cannot exceed 6 metres. If the difference is greater than 6 metres, increase the prefilling pressure of the expansion vessel and the system when cold by 0.1 bar for each meter increase.

## 5.9 Circulation pump

The flow-head performance curve available for the heating system is shown in the graph below.

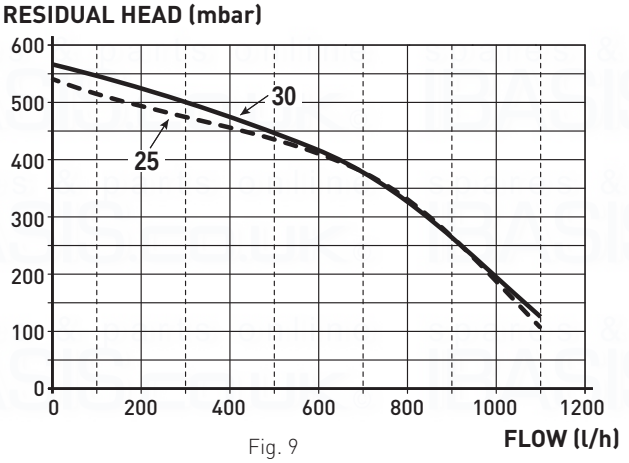


Fig. 9

**CAUTION**

The appliance is equipped with a by-pass which ensures water circulation in the boiler when thermostatic valves are used in the system. The heating system design should incorporate a room thermostat. Thermostatic radiator valves fitted to all radiators except the room where the room thermostat is fitted. Properties with floor areas exceeding 150squre metres should be zoned.

## 5.10 Control panel

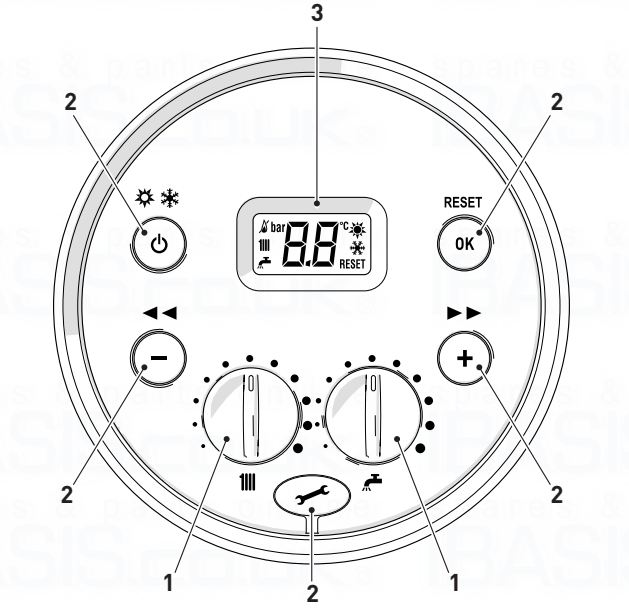


Fig. 10

### 1 KNOBS

The heating knob allows the user to set the heating temperature to between 20 and 80°C during normal operation (Default PAR tS1.3 / 1.4).

The domestic hot water knob allows the user to set the domestic hot water temperature to between 10 and 60°C during normal operation.

### 2 FUNCTIONAL BUTTONS

Press for more than one second and release to step through the operating modes (Stand-by – Summer – Winter).

This allows the engineer to scroll through the parameters or decrease the values.

This allows the engineer to scroll through the parameters or increase the values.

OK This allows the engineer to confirm the selected parameter or to modify the value or to reset the appliances from a lockout failure.

Programming connector cover plug.

***NB:** pressing any one of these buttons for more than 30 seconds generates a fault on the display without preventing boiler operation. The warning disappears when the button is released.*

### 3 DISPLAY

**"SUMMER"**. This symbol appears when the boiler is operating in Summer mode or if only the domestic hot water mode is enabled via the remote control. If the symbols and are flashing, this indicates that the chimney sweep function is active.

**"WINTER"**. This symbol appears when the boiler is operating in Winter mode or if both the domestic hot water and heating modes are enabled via the remote control. With dedicated remote controls CR or Home, if no operating modes have been enabled both symbols and will be off.

RESET **"RESET REQUIRED"**. This message only appears if there is a malfunction which must be or may be restored manually.

**"DOMESTIC HOT WATER"**. This symbol is present during a request for DHW or when the chimney sweep function is operating; it flashes during the domestic hot water set point selection.

**"HEATING"**. This symbol is present during heating operation or when the chimney sweep function is operating; it flashes during the heating set point selection.

**"LOCKOUT" DUE TO NO FLAME**.

**"FLAME LIT"**.

AL **"ALARM"**. This indicates that a fault has occurred. The number specifies the cause which generated the alarm (see section "**Fault / malfunction codes**".

## 5.11 Wiring diagram

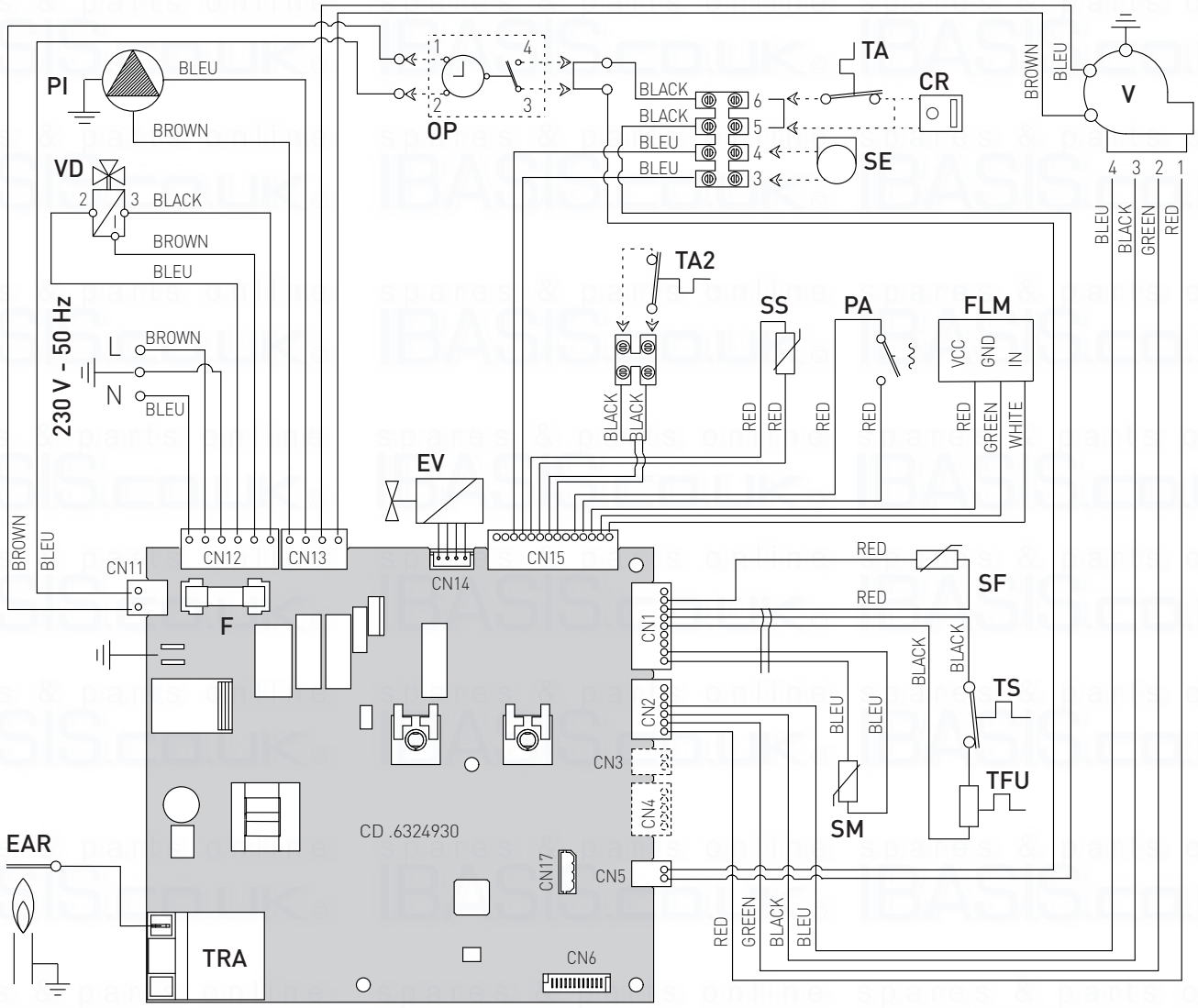


| | | | |
|---|---|---|---|
| ***L*** | *Live* | ***TS*** | *Safety thermostat* |
| ***N*** | *Neutral* | ***TFU*** | *Thermal fuse* |
| ***F*** | *Fuse (3.15AT)* | ***SF*** | *Exhaust sensor (SF)* |
| ***TRA*** | *Ignition transformer* | ***FLM*** | *Flow meter* |
| ***PI*** | *Pump* | ***VD*** | *Diverter valve* |
| ***V*** | *Fan* | ***PA*** | *Water pressure switch* |
| ***EAR*** | *Ignition / Detection electrode* | ***TA-TA2*** | *Room Thermostat* |
| ***EV*** | *Gas solenoid valve* | ***SE*** | *External sensor* |
| ***SS*** | *Domestic hot water sensor (SS)* | ***CR*** | *Remote control (instead of room thermostat)* |
| ***SM*** | *Delivery sensor (SM)* | ***OP*** | *Mechanical timer (accessory)* |

**Note: Volt free external controls (TA) are connected to terminals 5 and 6 after removal of the link.**

Fig. 11

**CAUTION**

**Installer must:**

- Connect the boiler to a 230v -50Hz single phase power supply through a fused mains switch, with at least 3mm spacing between contacts, fused at 3amps
- Respect the connections L (Live) - N (Neutral)
- Ensure that the special power cable is only replaced with a cable ordered as a spare part and connected by professionally qualified personnel
- Connect the earth wire to an effective earthing system. **Sime Ltd** declines all responsible for any injury or damage to persons, animals,or property as a result of failure to provide adequate earthing of the appliance.

**DO NOT**

Do not use water pipes for earthing the appliance.

# INSTALLATION AND SERVICING INSTRUCTIONS

## TABLE OF CONTENTS


6 INSTALLATION 20
- 6.1 Receiving the product . . . 20
- 6.2 Dimensions and weight . . . 20
- 6.3 Handling . . . 20
- 6.4 Ventilation requirements . . . 20
- 6.5 New installation or installation of a replacement appliance . . . 21
- 6.6 Cleaning the system . . . 21
- 6.7 Characteristics of feedwater and system treatment . . 21
- 6.8 Boiler installation . . . 21
- 6.9 Plumbing connections . . . 22
  - *6.9.1 Plumbing accessories (optional) . . . 22*
- 6.10 Condensate outlet/collection . . . 22
- 6.11 Gas supply . . . 22
- 6.12 Connecting the flue . . . 23
  - *6.12.1 Flue Terminal Positions . . . 23*
  - *6.12.2 Installation of coaxial flues 60/100mm – 80/125mm . . . 24*
  - *6.12.3 Installation of separate ducts 80mm . . . 25*
- 6.13 Electrical connections and External controls . . . 26
  - *6.13.1 External sensor . . . 27*
  - *6.13.2 External timers and Room Thermostats . . . 27*
  - *6.13.3 EXAMPLE of use of the command/control device on some types of heating systems . . 27*
- 6.14 Refilling or emptying . . . 28
- 6.15 Method of filling a sealed system . . . 28
  - *6.15.1 SYSTEM Filling . . . 28*
  - *6.15.2 EMPTYING operations . . . 29*

7 COMMISSIONING 30
- 7.1 Preliminary operations . . . 30
- 7.2 Before commissioning . . . 30
  - *7.2.1 Self-calibrating procedure . . . 30*
- 7.3 Parameter setting and display . . . 31
- 7.4 List of parameters . . . 31
- 7.5 Fault / malfunction codes . . . 32
- 7.6 Display of operating data and counters . . . 33
- 7.7 Checks . . . 33
  - *7.7.1 Chimney sweep function . . . 33*
- 7.8 Gas conversion . . . 34
- 7.9 Heating power output adjustment . . . 34

8 MAINTENANCE 35
- 8.1 Servicing . . . 35
- 8.2 External cleaning . . . 35
  - *8.2.1 Cleaning the case . . . 35*
- 8.3 Burner Inspection . . . 35
  - *8.3.1 Burner access . . . 35*
  - *8.3.2 Cleaning the burner and the combustion chamber . . . 36*
  - *8.3.3 Checking the ignition/detection electrode . 36*
  - *8.3.4 Final operations . . . 36*
- 8.4 Checks . . . 36
  - *8.4.1 Checking the flue . . . 36*
  - *8.4.2 Checking the expansion vessel pressure . . 36*
  - *8.4.3 System Inhibiter concentration . . . 36*
- 8.5 Circuit Board Replacement . . . 37
- 8.6 Possible faults and solutions . . . 37

9 EXPLODED VIEWS 40

10 APPENDIX 1 (GUIDANCE HHIC) 45

11 APPENDIX 2 57

12 PRODUCT DATA SHEET 58

# 6 INSTALLATION

## 6.1 Receiving the product

**Murelle Pro HE ErP** appliances are delivered in a single unit protected by cardboard packaging.

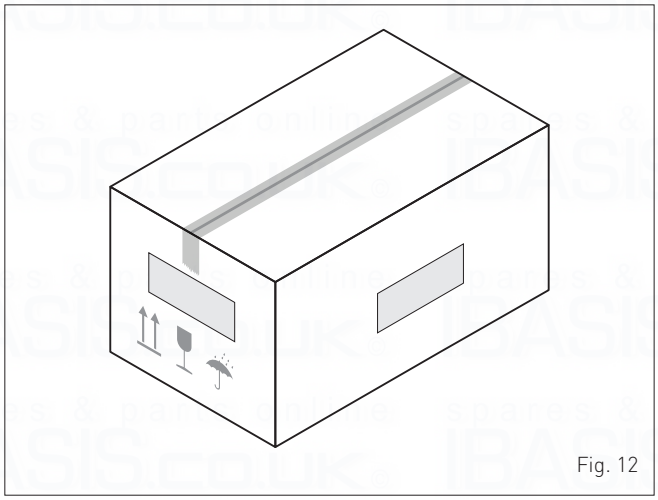

Fig. 12

The plastic bag found inside the packaging contains the following:
- Installation, use and maintenance manual
- Paper template for boiler installation
- Bracket for mounting the boiler on the wall
- Certificate of warranty
- Hydrostatic test certificate
- Hanging Bracket
- Connection pack

**DO NOT**
Do not leave packaging material around or near children since it could be dangerous. Dispose of it as prescribed by legislation in force.

## 6.2 Dimensions and weight

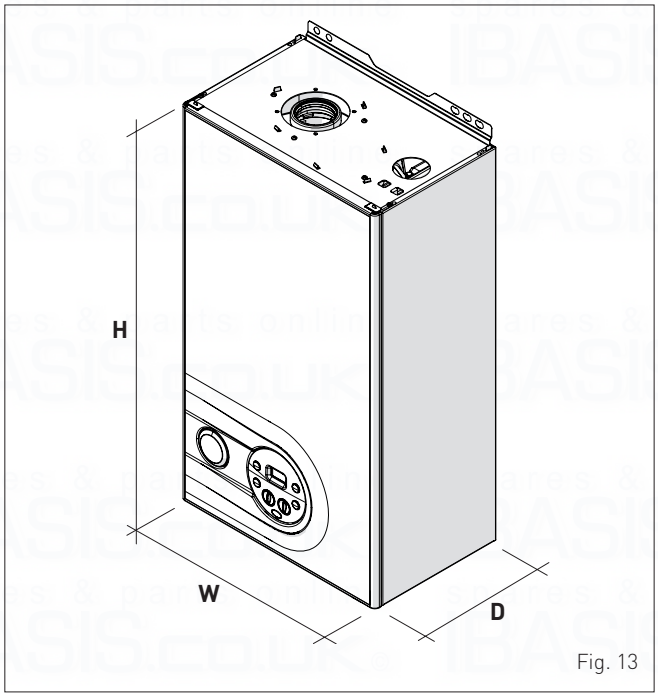


Fig. 13

| Description | Murelle Pro HE ErP | |
|---|---|---|
| | 25 | 30 |
| W (mm) | 400 | |
| D (mm) | 250 | |
| H (mm) | 700 | |
| Weight (kg) | 28,5 | |

## 6.3 Handling

Once the packaging has been removed, the appliance is to be handled manually, tilting it slightly, lifting it and applying pressure in the points indicated in the figure.

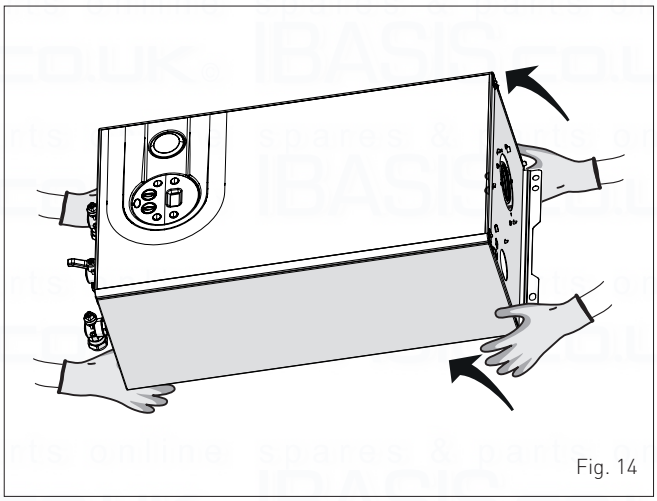

Fig. 14

**DO NOT**
**Do not hold onto the appliance casing but use the "solid" parts such as the base and the rear structure**.

**DANGER**
Use suitable tools and personal protection when removing the packaging and when handling the appliance.

## 6.4 Ventilation requirements

Detailed recommendations for the air supply are given in BS 5440-2. The following note is given for guidance. It is not necessary to have purpose provided air vents in the room or compartment that the appliance is installed.
The minimum temperature of the installation room must NOT be lower than **-5 °C**.

**CAUTION**
Observe the required clearances (see Fig. 15).

**APPROXIMATE MINIMUM DISTANCES**

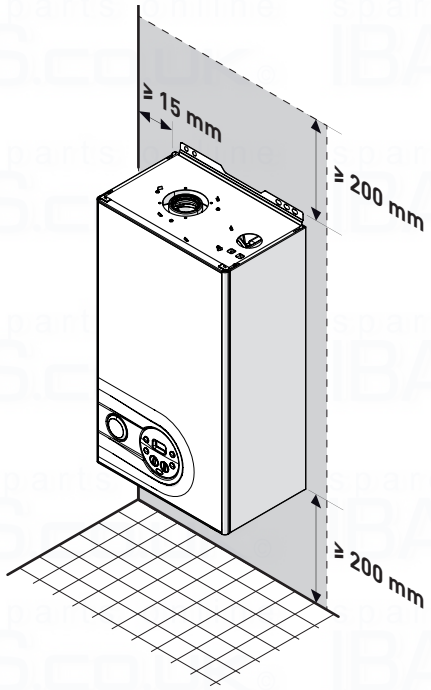


Fig. 15

## 6.5 New installation or installation of a replacement appliance

The boiler must be installed in a fixed location and only by specialized and qualified person in compliance with all instructions contained in this manual.
The installation of this boiler must be in accordance with the relevant requirements of the current Gas Safety (installation and use), the local building regulations and I.E.E. wiring regulations.
Detailed recommendations for air supply and fluing are given in BS5440.
The following notes are for general guidance: it is not necessary to have a purpose provided air vent in the room or compartment in which the appliance is installed.

**CAUTION**
It is a condition of the warranty that the boiler is installed in accordance with the instructions in this manual. The boiler must be registered with Gas Safe Register, the Benchmark record must be completed and the boiler is serviced annually and recorded in this manual.

**CAUTION**
If the domestic water supply is metered or should a water meter be added at a later time, a small expansion vessel should be included in the domestic water pipework.

## 6.6 Cleaning the system

Before connecting the boiler it is recommended that the system be flushed in accordance to BS 7593, to eliminate any foreign bodies that may be detrimental to the operating efficiency of the appliance.

**CAUTION**
Failure to flush and add inhibiter to the system may invalidate the warranty.

## 6.7 Characteristics of feedwater and system treatment

- All recirculatory systems will be subject to corrosion unless an appropriate water treatment is applied. This means that the efficiency of the system will deteriorate as corrosion sludge accumulates within the system, risking damage to pump and valves, boiler noise and circulation problems.
- Before connecting the boiler the associated central heating system must be flushed in accordance with the guidelines given in BS 7593 "Treatment of water in domestic hot water central heating systems".
- **Sime Ltd** recommends only the use of FERNOX products for the flushing and final treatment of the system water. This is particularly important in hard water areas. Failure to flush and add inhibitor to the system may invalidate the appliance warranty. Artificially softened water must not be used to fill the heating system. Naturally soft water areas can corrode aluminium heat exchangers. Adding Fernox F1 or Mb-1 will guard against corrosion.
- **Sime Ltd** promote the fitting of TF1 System filter with any new boiler installation.
- It is important to check the inhibitor concentration after installation, system modification and annually on a service visit in accordance with the manufacturer's instructions. (Note on benchmark service record this has been complete). Test kits are available from inhibitor stockists; the return of the Fernox test report should be kept with the Benchmark to validate warranty.
- Where Central heating systems are susceptible to freezing a mixture of inhibitor and anti-freeze should be added in accordance with the DWTA code of practice and the Manufactures instructions.
- The addition of sealing agents to system water is not recommended because deposits can be left in heat exchanger causing circulation issues.

## 6.8 Boiler installation

**Murelle Pro HE ErP** are supplied with a hanging bracket and a template to assist installation.
For installation:
- place the template on the wall (2), ensuring that it is level. mark the fixing holes
- drill the holes (10mm), insert the expansion plugs (3) secure the bracket (1) to the wall
- hook the boiler onto the pins (4) and secure it using the nuts and washers supplied.

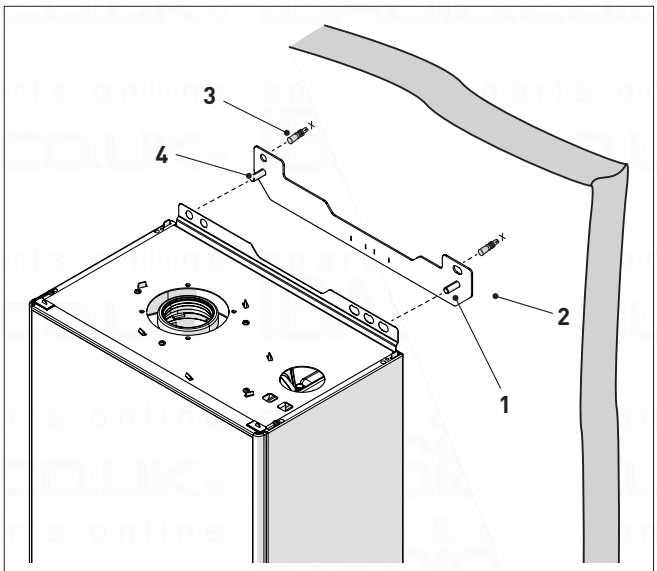


Fig. 16

**CAUTION**

– The boiler should be located observing the required clearances, and provide safe, adequate service access.

## 6.9 Plumbing connections

The plumbing connections have the following characteristics and dimensions.

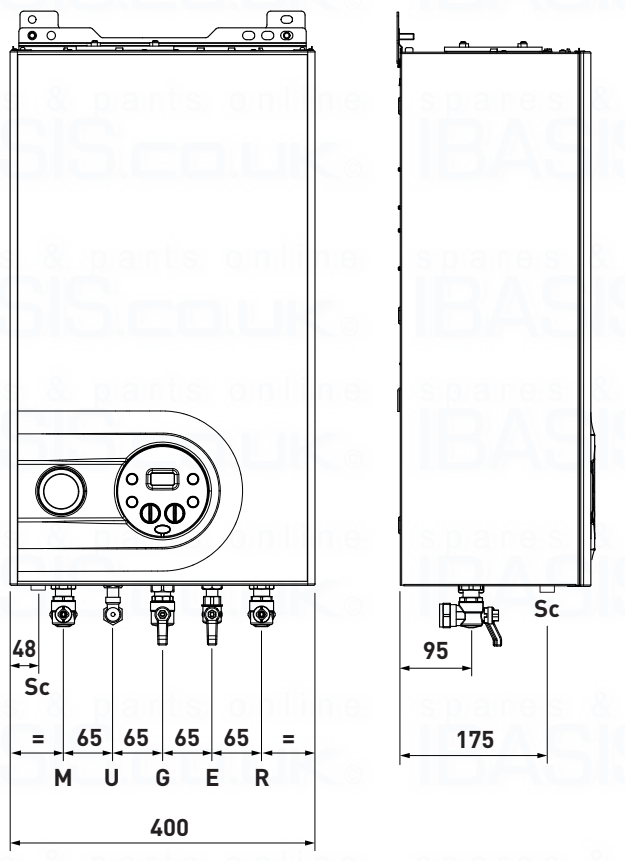


Fig. 17

| Description | Murelle Pro HE ErP | |
|---|---|---|
| | 25 | 30 |
| M - System flow | Ø 22 mm | |
| R - System return | Ø 22 mm | |
| U - Domestic hot water output | Ø 15 mm | |
| E - Domestic hot water inlet | Ø 15 mm | |
| G - Gas cock connection | Ø 15 mm | |
| Sc - Condensate outlet | Ø 21.5 mm | |

**CAUTION**

A sealed system must only be filled by a competent person (see section **Method of filling a sealed system** page 29).

### 6.9.1 Plumbing accessories (optional)

To facilitate plumbing and gas connections to the systems, the accessories as shown in the table below are available and are to be ordered separately from the boiler.

| DESCRIPTION | CODE |
|---|---|
| Stand off frame (25 mm) | 8082212 |
| Valve cover | 8094530 |

***NB:*** *kit instructions are supplied with the accessory itself or are to be found on the packaging.*

## 6.10 Condensate outlet/collection

To ensure safe disposal of the condensate produced by the flue gases, reference should be made to BS6798:2009.
The boiler incorporates a condensate trap which has a seal of 75 mm, therefore no additional trap is required.
The condensate trap can be filled prior to the installation of the flue by carefully pouring 1 litre of water into the exhaust connection.

*NOTE: All pipework must have a continuous fall from the boiler and must be resistant to corrosion by condensate, copper or steel is NOT suitable. It should be noted that the connection of a condensate pipe to a drain may be subject to local building control requirements (Dealing with Condensate - see Appendix 1).*

## 6.11 Gas supply

**Murelle Pro HE ErP** boilers leave the factory prearranged for gas G20 (methane) and can also work with G31 (propane) without the need for any type of mechanical conversion.Simply select parameter **"03"** (see "**Parameter setting and display**" page 35) and set the type of gas to be used.
If changing the type of gas to be used, carry out the entire appliance **"COMMISSIONING"** phase (page 34).
The gas connection must be made using seamless steel or copper tube.
Where the piping has to pass through walls, a suitable insulating sleeve must be provided.
When sizing gas piping, from the meter to the boiler, take into account both the volume flow rates (consumption) in m3/h and the relative density of the gas in question.
The sections of the piping making up the system must be such as to guarantee a supply of gas sufficient to cover the maximum output available from the boiler, limiting pressure loss between the gas meter and any apparatus being used to not greater than 1.0 mbar for family II gases (natural gas).
An adhesive data badge is sited inside the front panel; it contains all the technical data identifying the boiler and the type of gas for which the boiler is arranged.

## 6.12 Connecting the flue

**CAUTION**

- The appliance must be installed as a room sealed device and unless stated in writing from the manufacturer, in accordance with the current edition of BS 5440-1. The information shown in this manual is for guidance and parts identification.
- Prior to fitting the flue, the condensate trap can be filled by carefully pouring water into the exhaust section of the flue connection.

### 6.12.1 Flue Terminal Positions

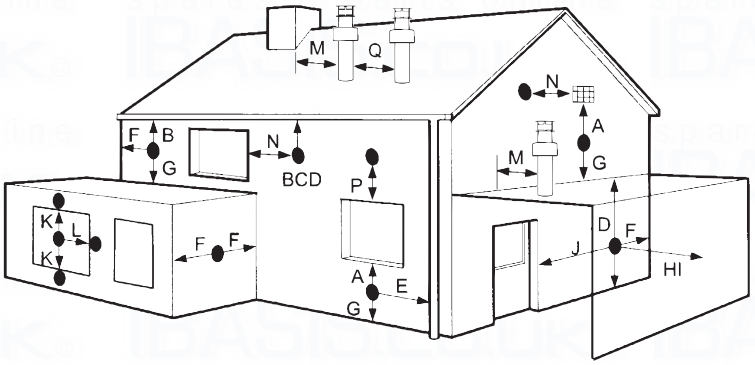


| Terminal position | | Minimum spacing | |
|---|---|---|---|
| **A** | Directly below an openable window, air vent or any other ventilation opening | 300 mm | 12 in |
| **B** | Below guttering, drain pipes or soil pipes (**) | 75 mm | 3 in |
| **C/D** | Below eaves, balconies or carport roof (*) | 200 mm | 8 in |
| **E** | From vertical drain pipes or soil pipes | 75 mm | 3 in |
| **F** | From internal or external corners | 300 mm | 12 in |
| **G** | Above adjacent ground, roof or balcony level | 300 mm | 12 in |
| **H** | From a boundary or surface facing the boiler | 600 mm | 24 in |
| **I** | From a terminal facing the terminal | 1,200 mm | 48 in |
| **J** | From an opening in the carport (eg door, window into dwelling) | 1,200 mm | 48 in |
| **K** | Vertically from a terminal on the same wall | 1,500 mm | 60 in |
| **L** | Horizont. from a terminal on the same wall | 300 mm | 12 in |
| **M** | Horizont. from a vertical terminal to a wall | 300 mm | 12 in |
| **N** | Horizont. from an openable window or other opening | 300 mm | 12 in |
| **P** | Above an openable window or other opening | 300 mm | 12 in |
| **Q** | From an adjacent vertical terminal | 600 mm | 24 in |

(*) This dimension to be used with ventilated soffits. With unvented soffits this can be reduced to 75 mm and further reduced to 25 mm when a flue shield is used to protect from the effects of heat and condensation.

(**) This can be reduced to 25 mm but it may be necessary to protect the surfaces from the effects of heat and condensation.

- If the terminal discharges into a pathway or passageway check that combustion products will not cause nuisance andthat the terminal will not obstruct the passageway.
- Where the lowest part of the terminal is fitted less than 2 m (78 in) above ground, above a balcony or above a flat roof to which people have access, the terminal MUST be protected by a purpose designed guard.
- The air inlet/outlet flue duct MUST NOT be closer than 10 mm (0.4 in) to combustible material.
- In certain weather conditions the terminal may emit a plume of steam. This is normal but positions where this would cause a nuisance should be avoided.

Fig. 18

### 6.12.2 Installation of coaxial flues 60/100mm – 80/125mm

Coaxial flue kits that are supplied separately. The diagrams below, illustrate some examples of fluing options allowed and the maximum lengths than can be achieved. It is essential that a flue gas analysis point is made available directly above the boiler.

IMPORTANT:
- The insertion of each additional 90° bend with a diameter of 60/100 (code 8095850) reduces the available section by 1.5 meters.
- The insertion of each additional 90° bend with a diameter of 80/125 (code 8095870) reduces the available section by 2 meters.
- Each additional 45° curve installed a diameter of 60/100 (code 8095950) reduces the available length by 1.0 metres.
- Each additional 45° curve installed a diameter of 80/125 (code 8095970) reduces the available length by 1.0 metres.

HORIZONTAL FLUES MUST BE LEVEL

NOTE: Before connecting accessories, it is always advisable to lubricate the internal part of the gaskets with silicon products. Avoid using oils and greases.

| Model | Length of pipe Ø 60/100 | | | Length of pipe Ø 80/125 | | |
|---|---|---|---|---|---|---|
| | H (m) | V (m) | | H (m) | V (m) | |
| | | Min. | Max. | | Min. | Max. |
| Murelle Pro HE 25 | 6 | 1,3 | 8 | 12 | 1,2 | 15 |
| Murelle Pro HE 30 | 5 | 1,3 | 7 | 10 | 1,2 | 13 |

LIST OF ø 60/100 ACCESSORIES

1a Coaxial duct kit L. 790 code 8096250
1b Telescopic coaxial duct kit L. 695 code 8098605
2a Extension L. 1000 code 8096150
2b Extension L. 500 code 8096151
3 Vertical extension L. 140 with coupling code 8086950
5 Tile for joint code 8091300
6 Terminal for roof exit L. 1285 code 8091212 (includes 8086950)

LIST OF ø 80/125 ACCESSORIES

1 Coaxial duct kit L. 785 code 8096253
2a Extension L. 1000 code 8096171
2b Extension L. 500 code 8096170
3 Adapter for ø 80/125 code 8093150
5 Tile for joint code 8091300
6 Terminal for roof exit L. 1285 code 8091212 (includes 8093150)

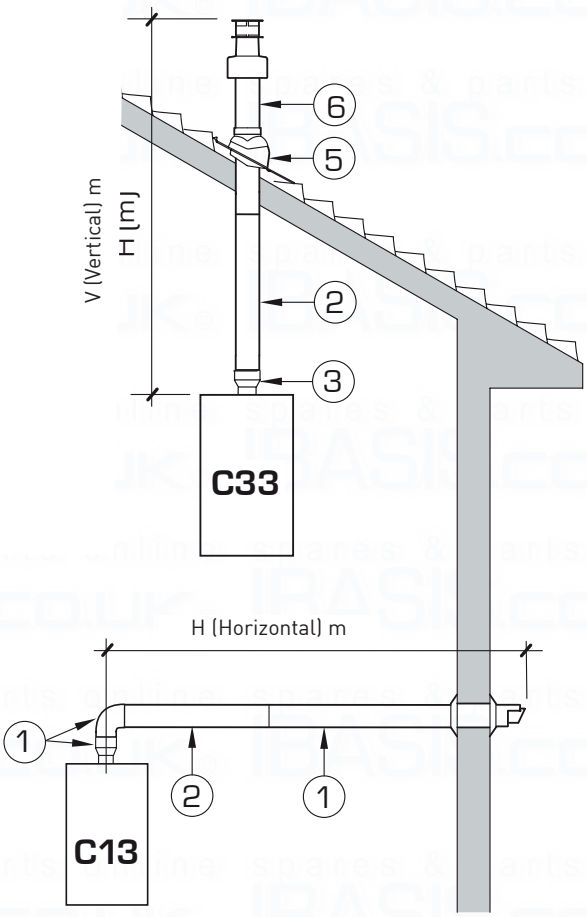


Fig. 19

### 6.12.3 Installation of separate ducts 80mm

The boiler can be installed with separate air inlet and exhaust ducts. The figure below illustrate some examples of the fluing options allowed and the associated losses of the accessories. The total load loss is the sum of the load losses of the accessories used. The maximum load loss **must not exceed 15 mm H20**, and the maximum flue length **must not exceed 25 m** inlet and exhaust.

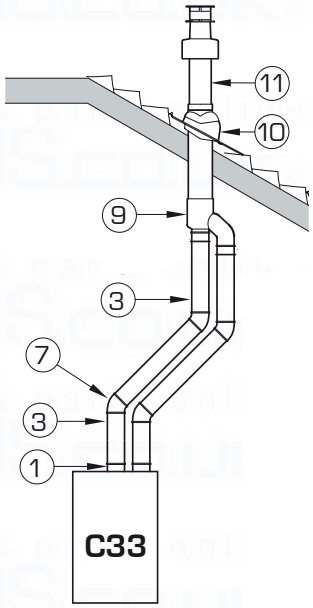


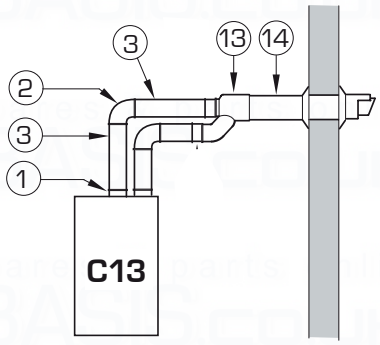


**NOTE**
**Before connecting accessories, it is always advisable to lubricate the internal part of the gaskets with silicon products. Avoid using oils and greases.**

| | | Murelle Pro HE 25 Load loss - mm H2O | | Murelle Pro HE 30 Load loss - mm H2O | |
|---|---|---|---|---|---|
| | | Inlet | Exhaust | Inlet | Exhaust |
| 1 | Air/smoke divider, code 8093050 | 0 | 0 | 0 | 0 |
| 2 | 90° bend, code 8077450 | 0.20 | 0.25 | 0.25 | 0.30 |
| 3 a | Extension 80mm L. 1000, code 8077351 | 0.15 | 0.15 | 0.20 | 0.20 |
| 3 b | Extension 80mm L. 500, code 8077350 | 0.075 | 0.075 | 0.10 | 0.10 |
| 7 | 45° bend, code 8077451 | 0.15 | 0.15 | 0.20 | 0.20 |
| 9 | Inlet/ exhaust fitting, code 8091401 | – | – | – | – |
| 10 | Articulated tile, code 8091300 | – | – | – | – |
| 11 | Vertical roof terminal, code 8091204 * | 0.80 | 0.10 | 1.10 | 0.15 |
| 13 | Inlet/ exhaust fitting, code 8091401 | – | – | – | – |
| 14 | Coaxial Terminal, code 8091204 * | 0.80 | 0.10 | 1.10 | 0.15 |

* This loss includes the losses with use of item 9 or 13

Fig. 20

It is essential that flue gas analysis points are made available directly above the boiler, these are incorporated in the twin flue adaptor code 8093050.

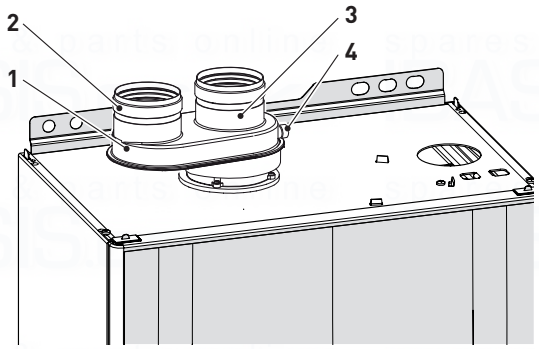


Fig. 21

**1** *Twin pipe adaptor with test points 8093050*
**2** *Air inlet*
**3** *Exhaust*
**4** *Test point*

**CAUTION**

- The maximum overall length is determined by the sum of the load losses of the individual flue components **must not exceed 15 mm H20**.
- The maximum flue length must not exceed 25m – air intake, 25m –exhaust.

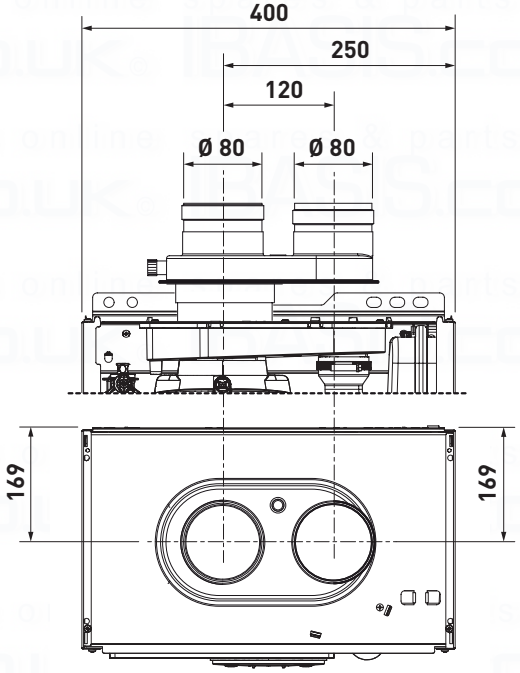


Fig. 22

## 6.13 Electrical connections and External controls

The boiler is supplied with a mains cable. Connect the boiler to a 230V -50Hz single phase power supply through a fused mains switch, with at least 3 mm spacing between contacts, fused at 3 amps.
If this cable needs to be replaced, an original spare must be requested from **Sime Ltd**.
The heating control of the boiler can be achieved by connection of either a volt free room thermostat, room thermostat/timer or a dedicated control (listed below). For connection details see section "External timers and Room Thermostats").

| DESCRIPTION | CODE |
|---|---|
| External sensor kit (ß=3435, NTC 10KOhm at 25°C) | 8094101 |
| Power cable (dedicated) | 6323875 |
| Remote control HOME (open therm) | 8092280 |
| Remote control HOME PLUS (open therm) | 8092281 |

**CAUTION**
Only qualified persons in compliance with the instructions contained in this manual are permitted to install, commission and maintain this boiler. The installation of this boiler must be in accordance with the relevant requirements of the current Gas Safety(installation and use), the local building regulations, and I.E.E. wiring regulations.

**DANGER**
Before carrying out any interventions described:
- isolate the power supply
- isolate the gas cock
- avoid contact with any hot surfaces.

To make the electrical connections:
- remove the two screws (1), pull the front panel (2) forwards and release it from the top by lifting it

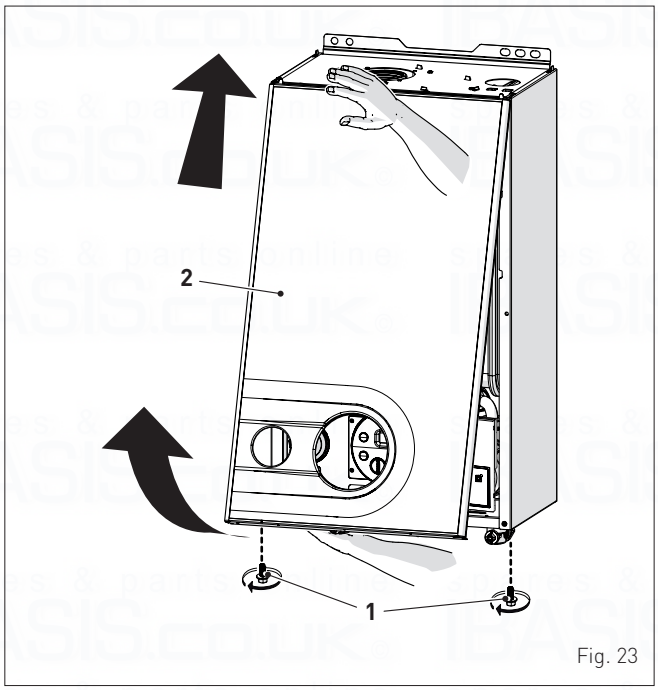

Fig. 23

- remove the screws (3) securing the control panel (4)
- move the panel (4) upwards (a) but keeping it in the side guides (5) to the end of travel
- bring it forwards and down (b) until it is horizontal

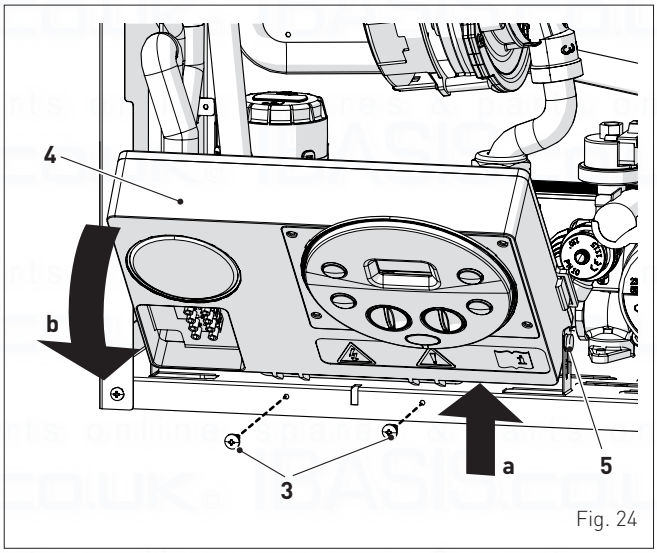

Fig. 24

- insert the connection wires through the grommet (6) and the opening (7) on the control panel

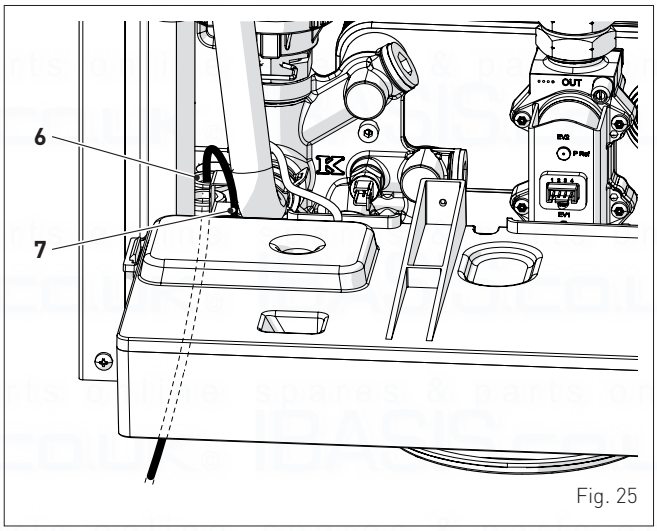

Fig. 25

- bring the control panel (4) to the original position and secure it with the screws (3) which were removed previously
- connect the component wires to the terminal board (8) following the indications provided on the data plate (9) and as shown in section **"Wiring diagram"**.

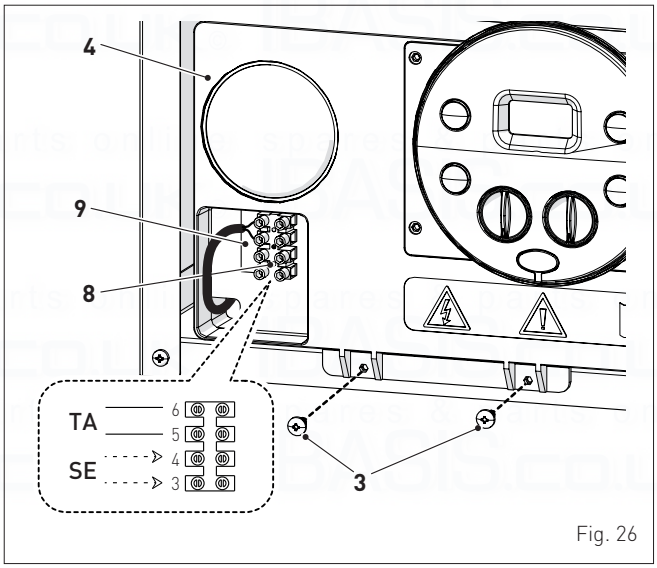

Fig. 26

**CAUTION**
It is compulsory:
- to connect the boiler to a 230v -50Hz single phase power supply through a fused mains switch, with at least 3mm spacing between contacts, fused at 3amps
- if the power cable is to be replaced, that ONLY a special cable is used with a factory produced re-wired connector, ordered as a spare part and connected by a professionally qualified person
- to connect the earth wire to an effective earthing system (*)
- that before any work is done on the boiler, the mains power is disconnected by setting the main system switch to "OFF".

*(*) **Sime Ltd** declines all responsible for any injury or damage to persons, animals,or property as a result of failure to provide adequate earthing of the appliance.*

**DO NOT**
Do not use water pipes for earthing the appliance.

### 6.13.1 External sensor

The boiler is designed for connection to an external temperature sensor code 8094101, which will automatically regulate the central heating delivery temperature.
This means that the delivery temperature of the boiler can vary on the basis of the external temperature depending on the climatic curve selected from those shown in the diagram (Fig. 27).
When fitting the sensor on the outside of the building, follow the instructions provided on the packaging of the product itself.

**Climatic curve**

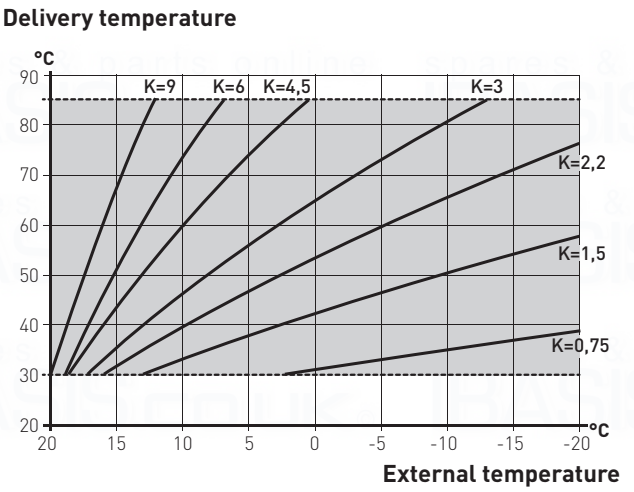

Fig. 27

**CAUTION**
If there is an external sensor, the heating delivery SET is corrected using correction factor K in order to adapt better to the user's needs. To modify this value, carry out the same procedure as when modifying the heating SET but with the possible range between 0.0 and 9.0.

### 6.13.2 External timers and Room Thermostats

The heat demand can be by a "clean contact" conforming to EN607301 connected to TA (see section **"Wiring diagram"**) or by use of a dedicated Sime Remote Control (Home or Home Plus). The boiler will automatically detect when a dedicated control is connected.

### 6.13.3 EXAMPLE of use of the command/control device on some types of heating systems

*KEY*

| | |
|---|---|
| *M* | *System flow* |
| *R* | *System return* |
| *CR* | *Remote control* |
| *SE* | *External sensor* |
| *TA÷TA3* | *Air thermostat for the zone* |
| *VZ1-VZ3* | *Zone valves* |
| *RL1-RL3* | *Zone relays* |
| *P1-P3* | *Zone pump* |
| *SP* | *Hydraulic separator* |

**ONE DIRECT ZONE system, external sensor and air thermostat.**

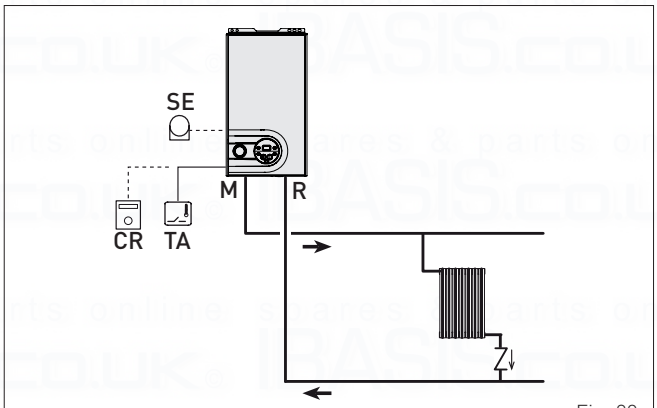

Fig. 28

**MULTI ZONE system - with zone valve, air thermostat and external sensor.**

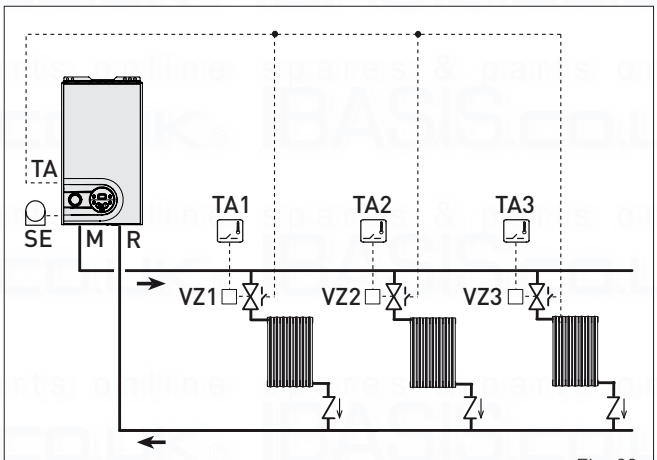

Fig. 29

**CAUTION**
Set the parameter "tS 1.7 = DELAY SYSTEM PUMP ACTIVATION to allow the opening of zone valve VZ.

**MULTI ZONE system - with pump, air thermostat and external sensor.**

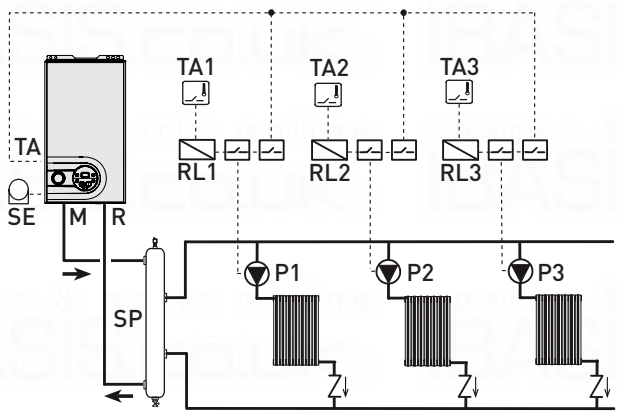


Fig. 30

## 6.14 Refilling or emptying

Before carrying out the operation described below, isolate the boiler power supply.
Ensure that the inhibiter concentration is correct on refilling.

## 6.15 Method of filling a sealed system

A sealed system must only be filled by a competent person using a method similar to that shown in figure below.

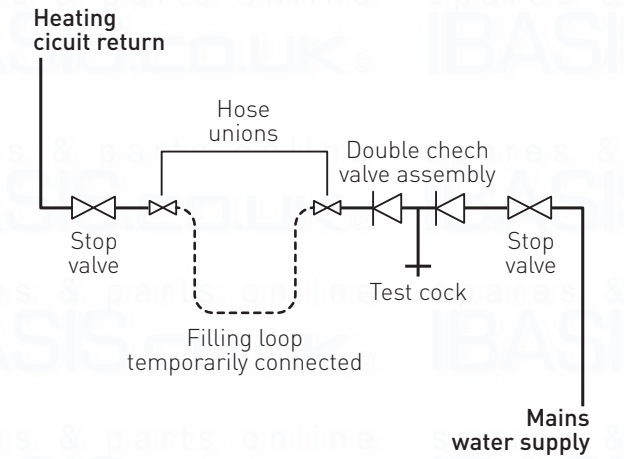


Fig. 31

### 6.15.1 SYSTEM Filling

**Remove the front panel:**
- remove the two screws (1), pull the front panel (2) forwards and release it from the top by lifting it.

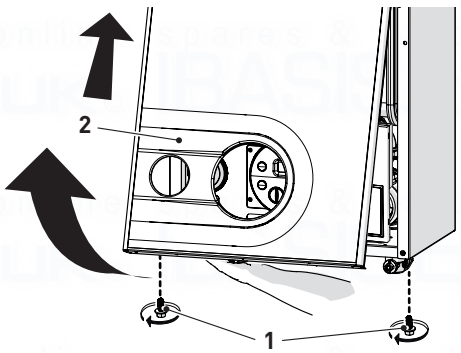


Fig. 32

**Domestic hot water circuit:**
- open the domestic hot water inlet isolation valve (4)
- open each of the DHW taps until air is expelled.

**Heating circuit:**
- open the isolation and air bleeding valves in the highest points of the system
- loosen the automatic bleed valve (3)
- open the heating circuit isolation valves (8) and (9)
- activate the filling system "**Method of filling a sealed system**", and fill the heating system until a pressure of **1-1.2 bar** is shown on the pressure gauge (5)
- stop the filling system
- check that there is no air in the system by bleeding all the radiators and the circuit on the high points of the system. Connect a suitable pipe and use the heat exchanger bleed point (10) to vent the primary heat exchanger

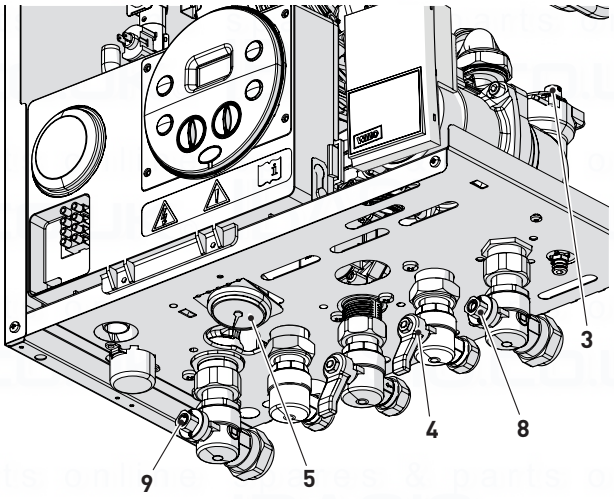


Fig. 33

***NB:*** *to completely remove all air from the system, it is recommended that this operation is repeated a number of times.*

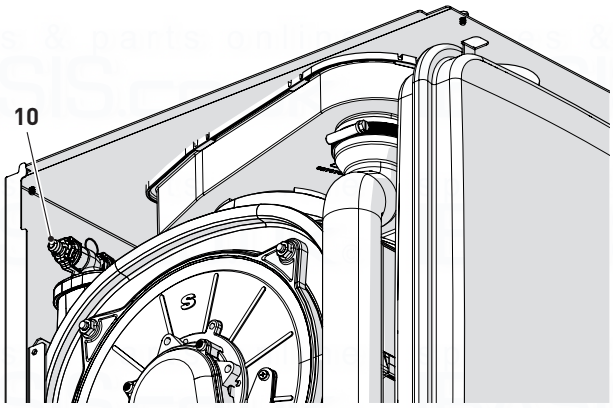


Fig. 34

- check the pressure on the pressure gauge (5) and if necessary top up until the correct pressure reading appears
- close the automatic bleed valve (3)
- it is recommended that the condensate trap is filled prior to fitting the flue, by carefully pouring water into the exhaust connection.

Refit the front panel of the boiler hooking it on at the top, pushing it forwards and securing it with the screw (1) which was removed previously.

### 6.15.2 EMPTYING operations

**Domestic hot water circuit:**
- close the domestic hot water circuit isolation valve (4)
- open one or more than one hot water taps and drain the domestic hot water circuit.

**Boiler:**
- loosen the automatic bleed valve (3)
- close the heating circuit isolation valves (8) and (9)
- connect a rubber hose to the boiler drain valve (7) and open it
- when it has fully emptied, close the drain valve (7).

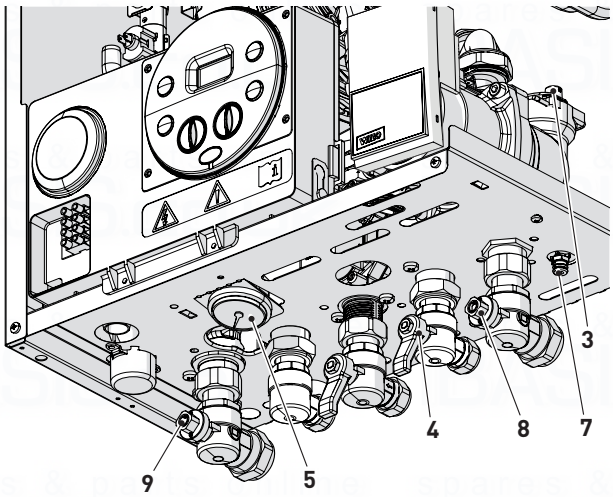


Fig. 35

# 7 COMMISSIONING

## 7.1 Preliminary operations

Before commissioning the appliance, check that:
- the type of gas is correct for the appliance
- the gas isolation valves for the heating system and the water system are open
- the system pressure as shown on the pressure gauge when the system is cold , is between **1 and 1.2 bar**
- the pump impeller rotates freely
- the siphon has been filled
- the flue is fitted correctly.

## 7.2 Before commissioning

After having carried out the preliminary operations, proceed as follows:
- set the main system switch to "ON"
- the type of gas for which the boiler has been calibrated, **"nG"** (methane) or **"LG"** (LPG,) will appear followed by the power. Finally **"- -"**will appear on the display

- press the button ⏻ once for at least 1 second to select "SUMMER mode" ☀. The value of the delivery sensor detected at that moment will appear on the display

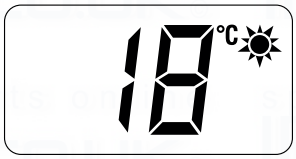


### 7.2.1 Self-calibrating procedure

Carry out the "Automatic self-calibrating procedure" as follows:
- turn the domestic hot water knob as far as it will go
- press and hold down the buttons **OK** and **+** at the same time for approximately 12 seconds until the flashing symbols ☀ and ❄ appear on the display

- as soon as the symbols begin to flash, release the buttons **OK** and **+** and press the button ⏻, **within 3 seconds**
- the "Automatic self-calibrating procedure" starts
- **to dissipate the heat , tun on one or more DHW taps**
- the values flash on the display: **"99"** (maximum value), followed by an "intermediate value" and finally **"00"** (minimum value)

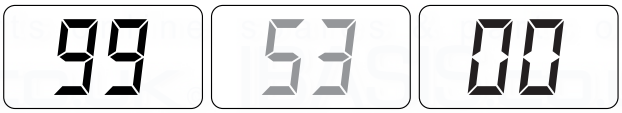


It may take up 15 minutes for the "self-calibrating procedure" to end and the message "SUMMER mode" ☀ to reappear on the display Once the procedure has terminated:
- close the taps opened previously and check that the appliance shuts down.

If there is a fault, the message **"AL"** will appear on the display followed by the fault code (eg. **"06"** - no flame detected).

**CAUTION**
To restore the start conditions press and hold the button **OK RESET** for more than 3 seconds. This operation can be performed up to a maximum of 6 times without the "self-calibrating procedure" being interrupted.

- press the button ⏻ once to select "WINTER mode" ❄. The value of the heating water temperature detected at that moment will appear on the display

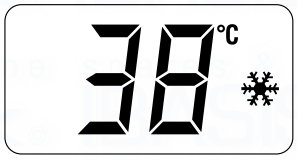


- operate the heating controls and check that the boiler starts and operates correctly
- using the procedure shown in section"**Chimney sweep function**" (page 37)complete inlet working gas pressure test and a flue gas analysis.

## 7.3 Parameter setting and display

To go into the parameter menu:

– from the selected mode (eg. WINTER)

– press the buttons **–** and **OK** (approximately 5 seconds) at the same time until **"tS"** (installer) appears on the 2 digits of the display which alternate with **"0.1"** (parameter number) and a **"2"** (set value)

– press the button **+** to scroll up the list of parameters and then **–** to scroll down the list

***NB:*** *holding the buttons* **+** *or* **–** *increases the speed of the scrolling movement.*

– once the required parameter has been reached, press the button **OK** for approximately 3 seconds to confirm and access the set value which will then flash and can then be modified

– to modify the value in the permitted range, press the buttons **+** to increase it or **–** to decrease it

– once the required value has been reached, press the button **OK** to confirm.

When all the parameter modifications have been made, exit the parameter menu by pressing and holding down the buttons **–** and **OK** **at the same time** for approximately 5 seconds until the initial screen is displayed.

## 7.4 List of parameters

| Type | No. | Description | Range | U/M | Step | Default |
|---|---|---|---|---|---|---|
| | | **CONFIGURATION** | | | | |
| tS | 0.1 | Index showing boiler power in kW<br>1 = 25<br>2 = 30 | 1 .. 2 | - | 1 | 1 or 2 |
| tS | 0.2 | Hydraulic configuration<br>0 = combi<br>1 = N/A<br>2 = N/A<br>3 = N/A<br>4 = N/A<br>5 = N/A | 0 .. 5 | - | - | 0 |
| tS | 0.3 | Gas Type Configuration<br>0 = G20; 1 = G31 | 0 .. 1 | - | - | 0 |
| tS | 0.4 | Combustion configuration<br>0 = sealed chamber with combustion control | - | - | - | 0 |
| tS | 0.8 | External sensor value correction | -5 .. +5 | °C | 1 | 0 |
| tS | 0.9 | Ignition fan speed | 80 .. 160 | RPMx25 | 1 | 128 |
| | | **DOMESTIC HOT WATER - HEATING** | | | | |
| tS | 1.0 | Boiler Antifreeze Threshold | 0 .. +10 | °C | 1 | 3 |
| tS | 1.1 | External Sensor Antifreeze Threshold<br>-- = Disabled | -9 .. +5 | °C | 1 | -2 |
| tS | 1.2 | Heating Curve Incline | 0 .. 80 | - | 1 | 20 |
| tS | 1.3 | Minimum Heating Temperature Adjustment | 20 .. Par tS 1.4 | °C | 1 | 20 |
| tS | 1.4 | Maximum Heating Temperature Adjustment | Par tS 1.3 .. 80 | °C | 1 | 80 |
| tS | 1.5 | Maximum power in CH mode | 0 .. 100 | % | 1 | 100 |
| tS | 1.6 | Heating Post-Circulation Time | 0 .. 99 | seconds x 10 | 1 | 3 |
| tS | 1.7 | Heating Pump Activation Delay | 0 .. 60 | seconds x 10 | 1 | 0 |

| Type | No. | Description | Range | U/M | Step | Default |
|---|---|---|---|---|---|---|
| tS | 1.8 | Re-ignition Delay | 0 .. 60 | Min | 1 | 3 |
| tS | 1.9 | Domestic Hot Water Modulation with Flow meter<br>0 = Disabled<br>1 = Enabled | 0 .. 1 | - | 1 | 1 |
| tS | 2.0 | Maximum power domestic hot water | 0 .. 100 | % | 1 | 100 |
| tS | 2.1 | Minimum power heating/domestic hot water (premixed) | 0 .. 100 | % | 1 | 0 |
| tS | 2.2 | Domestic hot water preheating enabling<br>0 = OFF; 1 = ON | 0 .. 1 | - | 1 | 0 |
| tS | 2.5 | Auxiliary TA function<br>0 = according to TA<br>1 = TA Antifreeze<br>2 = domestic hot water disabled | 0 .. 2 | - | 1 | 0 |
| tS | 2.6 | Zone Valve / Pump Relaunch Delay | 0 .. 99 | Min | 1 | 1 |
| tS | 2.8 | DHW activation delay with solar power | 0 .. 30 | Min | 1 | 0 |
| tS | 2.9 | Anti-legionella Function (Only hot water tank)<br>-- = Disabled | 50 .. 80 | - | 1 | -- |
| tS | 3.0 | Maximum domestic hot water temperature | 35 .. 67 | °C | 1 | 60 |
| tS | 3.5 | Digital / analogue Pressure switch<br>0 = water pressure switch<br>1 = water pressure transducer (with ALL 09)<br>2 = water pressure transducer (without ALL 09) | 0 .. 2 | - | 1 | 0 |
| tS | 4.0 | Modulating Pump Speed | -- = No modulation<br>AU = Automatic 30 .. 100 | % | 10 | AU |
| tS | 4.1 | ΔT Modulating pump delivery/Return | 10 .. 40 | % | 1 | 20 |
| tS | 4.7 | System pump forcing (only in winter mode)<br>0 = Disabled<br>1 = Enabled | 0 .. 1 | - | 1 | 0 |
| **RESET** | | | | | | |
| tS | 4.8 | INST Parameter set to default | 0 .. 1 | - | - | 0 |

In the event of a fault/malfunction the message **"AL"** will appear on the display alternating with the alarm number eg. **"AL 04"** (Domestic Hot Water Sensor Fault).
Before repairing the fault:
- disconnect the appliance from the mains power by setting the main switch to "OFF"
- as a precautionary measure, close the gas isolation valve.

***NB:*** *after having repaired the fault, when the alarm number appears on the display together with the message RESET (see figure), press the button* ***OK*** *(RESET) for approximately 3 seconds to start the appliance up again.*

## 7.5 Fault / malfunction codes

| Type | No. | Description |
|---|---|---|
| AL | 02 | Low water pressure in system |
| AL | 03 | High water pressure in system |
| AL | 04 | Domestic hot water sensor (SS) fault |
| AL | 05 | Delivery sensor (SM) fault |
| AL | 06 | No flame detection |
| AL | 07 | Safety thermostat intervention |
| AL | 08 | Fault in the flame detection circuit |
| AL | 09 | No water circulating in the system |
| AL | 10 | Auxiliary sensor fault |
| AL | 11 | Gas valve modulator disconnected |
| AL | 12 | Incorrect configuration of the open / sealed chamber |
| AL | 13 | Exhaust sensor (SF) intervention |
| AL | 14 | Exhaust sensor (SF) fault |
| AL | 15 | Fan check cable disconnected |
| AL | 18 | Condensate level fault |
| AL | 28 | Maximum number of consecutive resets (6) |
| AL | 37 | Fault due to low supply voltage |
| AL | 40 | Incorrect supply frequency detected |
| AL | 41 | Flame loss more than 6 consecutive times |
| AL | 42 | Button fault |
| AL | 43 | Open Therm communication fault |
| AL | 62 | Self-calibrating procedure is required |
| AL | 72 | Incorrect positioning of the delivery sensor |
| AL | 81 | Lockout due combustion during start-up |
| AL | 83 | Irregular combustion (temporary error) |
| AL | 96 | Lockout due to flue (exhaust) blockage |

## 7.6 Display of operating data and counters

Access the operating data **"In"** and the counters **"CO"** as follows:

- from the operating screen in the mode enabled at that moment (WINTER ❄ or SUMMER ☀)

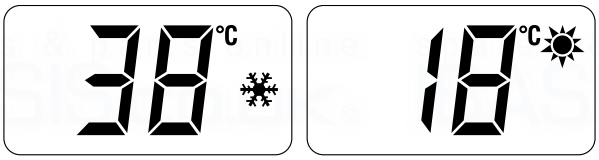


- go into **"INFO"** by pressing the buttons **+** and **–** **at the same time** for more than 3 seconds until **"In"** appears alternating with **"0.0"** (information number) and **"25"** (eg. value)

From this point, the technician has 2 options:

- scroll through the list of **"info"** and **"counters"** by pressing the button **+**. This way, scrolling will be in sequence
- display the **"activated alarms"** (no more than 10) by pressing the button **–**. Once in this section, proceed with button **+** or **–**.

When all the values have been displayed, exit the menu by pressing and holding down the button **OK** for approximately 5 seconds until the initial screen is displayed.

**TABLE OF INFORMATION DISPLAYED**

| Type | No. | Description | Range | U/M | Step |
|---|---|---|---|---|---|
| In | 0.0 | SW version | | | |
| In | 0.1 | External sensor (SE) | - 9 .. 99 | °C | 1 |
| In | 0.2 | Delivery sensor temperature (SM) | - 9 .. 99 | °C | 1 |
| In | 0.3 | Exhaust temperature (SF) | - 9 .. 99 | °C | 1 |
| In | 0.4 | Domestic hot water sensor temperature (SS) | - 9 .. 99 | °C | 1 |
| In | 0.5 | AUX auxiliary sensor | - 9 .. 99 | °C | 1 |
| In | 0.6 | Actual heating SET temperature | Par. 13 ... Par. 14 | °C | 1 |
| In | 0.7 | Power level | 0 .. 99 | % | 1 |
| In | 0.8 | DHW Flow rate | 0 .. 99 | l/min | 0.1 |
| In | 0.9 | Water pressure transducer reading (when fitted) | 0 .. 99 | bar | 0.1 |
| In | 1.0 | Actual speed fan number | 0 .. 99 | RPM x 100 | 1 |

**TABLE OF COUNTER DISPLAYED**

| Type | No. | Description | Range | U/M | Step |
|---|---|---|---|---|---|
| CO | 0.0 | total no. of boiler operating hours | 0 .. 99 | h x 1000 | 0.1; from 0.0 to 9.9; 1; from 10 to 99 |
| CO | 0.1 | total no. of burner operating hours | 0 .. 99 | h x 1000 | 0.1; from 0.0 to 9.9; 1; from 10 to 99 |
| CO | 0.2 | total no. of burner ignitions | 0 .. 99 | h x 1000 | 0.1; from 0.0 to 9.9; 1; from 10 to 99 |
| CO | 0.3 | total no. faults | 0 .. 99 | x 1 | 1 |
| CO | 0.4 | total no. of times installer parameters "tS"accessed | 0 .. 99 | x 1 | 1 |
| CO | 0.5 | total no. of times OEM parameters accessed | 0 .. 99 | x 1 | 1 |
| CO | 0.6 | Countdown to the next service | 1 .. 199 | months | 1 |

**TABLE OF ACTIVATED ALARMS/FAULTS**

| Type | No. | Description |
|---|---|---|
| AL | 00 | Last activated alarm/fault |
| AL | 01 | Last but one activated alarm/fault |
| AL | 02 | Third from last activated alarm/fault |
| AL | 03 | Previous activated alarm/fault |
| AL | 04 | Previous activated alarm/fault |
| AL | 05 | Previous activated alarm/fault |
| AL | 06 | Previous activated alarm/fault |
| AL | 07 | Previous activated alarm/fault |
| AL | 08 | Previous activated alarm/fault |
| AL | 09 | Previous activated alarm/fault |

## 7.7 Checks

### 7.7.1 Chimney sweep function

The chimney sweep function is used by the qualified maintenance technician to check the mains gas pressure, detect the combustion parameters and to measure the combustion efficiency. A combustion analysis should not be conducted until a satisfactory inlet working pressure test has been completed.

This function lasts 15 minutes and is activated by proceeding as follows:

- if the panel (2) has not already been removed, remove the two screws (1), pull the front panel (2) forwards and release it from the top by lifting it

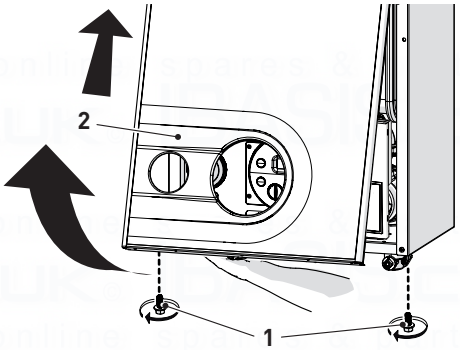


Fig. 36

- remove the screws (3) securing the control panel (4)
- move the panel (4) upwards (a) but keeping it in the side guides (5) to the end of travel
- bring it forwards and down (b) until it is horizontal

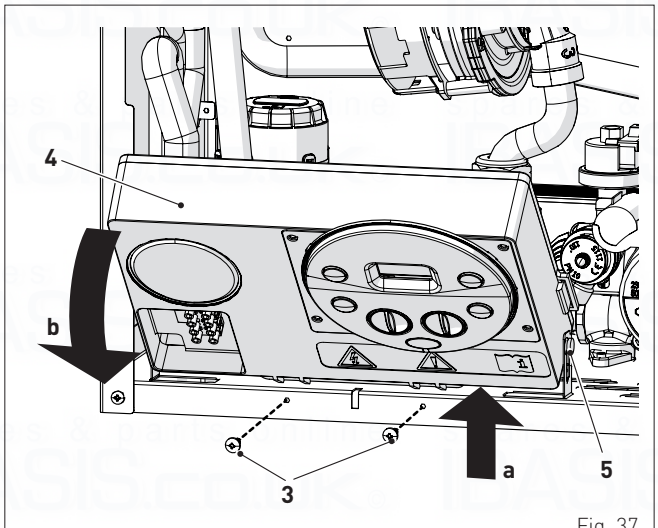

Fig. 37

- isolate the gas cock
- loosen the screw of the "mains pressure" point (6) and connect a pressure gauge

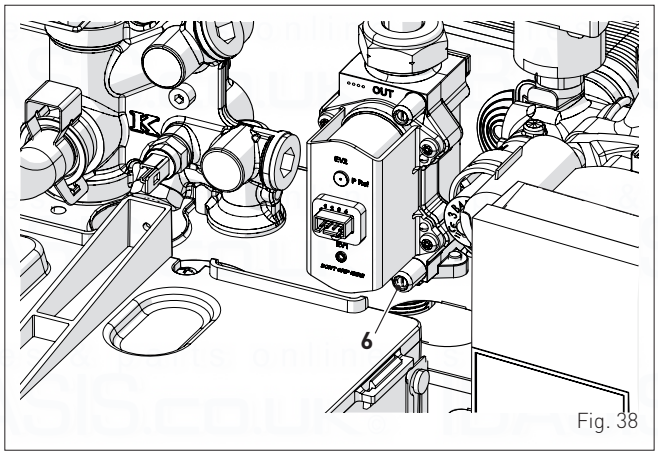

Fig. 38

- open the gas cock
- power the boiler by setting the main switch to "ON"
- press the button ⏻ until "SUMMER" mode ☀ has been selected
- press and hold down the buttons **OK** and **+** at the same time for approximately 10 seconds until the message "Hi" appears on the display together with the flashing symbols ☀ and ❄

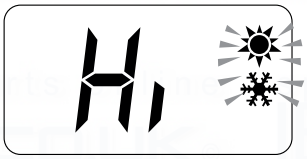


- press the button **+** to make the boiler operate at maximum power "Hi" and check that the mains gas pressure value on the pressure gauge is correct.
- press the button **–** to make the boiler operate at minimum power "Lo". The message **"Lo"** will appear on the display together with the flashing symbols ☀ and ❄

- press the button ⏻ to exit the "Chimney sweep Procedure". The boiler water delivery temperature will appear on the display

- disconnect the pressure gauge, carefully close the pressure point (6), test for gas tightness, put the control panel back to the original position and refit the front panel (2). Now conduct a flue gas analysis as detailed in APPENDIX 2
- ensure the required information is recorded in the Gas Boiler System Commissioning Checklist( Benchmark).

**Gas supply pressure**

| Type of gas | G20 | G31 |
|---|---|---|
| Pressure (mbar) | 19 | 36 |

*NOTE: There are negligeable losses of working gas pressure attributable to the boiler as the gas cock is connected directly to the gas valve.*

## 7.8 Gas conversion

**Murelle Pro HE ErP** models can work with G20 or G31 without the need for any mechanical conversion. Simply select parameter**"0.3"** (see "**Parameter setting and display**" page 35) and set the type of gas to be used.
If changing the type of gas to be used, carry out the entire appliance **"COMMISSIONING"** phase (page 34).

## 7.9 Heating power output adjustment

To comply with Building regulations, the heating output must be set according to the requirements of the installed heating system.
This is done by adjustment of "parameter 15" (tS 1.5).
Calculate the heating requirements of the heating system in kW. Determine what that value is, as a % of the nominal heat output of the boiler, see table "**Technical features**" page16.
Access the parameters as shown in "**Parameter setting and display**" page35, and adjust the parameter 15 (tS 1.5) to that % value

*Example:*
- *Heating system with 8 radiators, average 1.5 kW per radiator total heat*
- *Requirement 12 kW (8 x 1.5)*
- *Maximum nominal heat output of boiler = 23.6 kW*
- *Parameter 15 (tS 1.5) = 12/23.6 = 50.8%. Set tS 1.5 to 51%.*

# 8 MAINTENANCE

## 8.1 Servicing

As a condition of the warranty and to ensure correct operation and efficiency, it is important that the boiler is serviced every 12 months, within 30 days of the anniversary of the installation date ensure the required information is recorded in the Gas Boiler System Commissioning Checklist (Benchmark).

**CAUTION**
Only qualified persons in compliance with the instructions contained in this manual are permitted to install, commission and maintain this boiler. The installation of this boiler must be in accordance with the relevant requirements of the current Gas Safety(installation and use), the local building regulations, and I.E.E. wiring regulations.

**DANGER**
Before carrying out any interventions described:
- isolate the power supply
- isolate the gas cock
- avoid contact with any hot surfaces.

## 8.2 External cleaning

### 8.2.1 Cleaning the case

When cleaning the cladding, use a cloth dampened with soap and water or alcohol for stubborn marks.

**DO NOT**
Do not use abrasive products.

## 8.3 Burner Inspection

### 8.3.1 Burner access

To access the internal parts of the boiler:
- remove the two screws (1), pull the front panel (2) forwards and release it from the top by lifting it

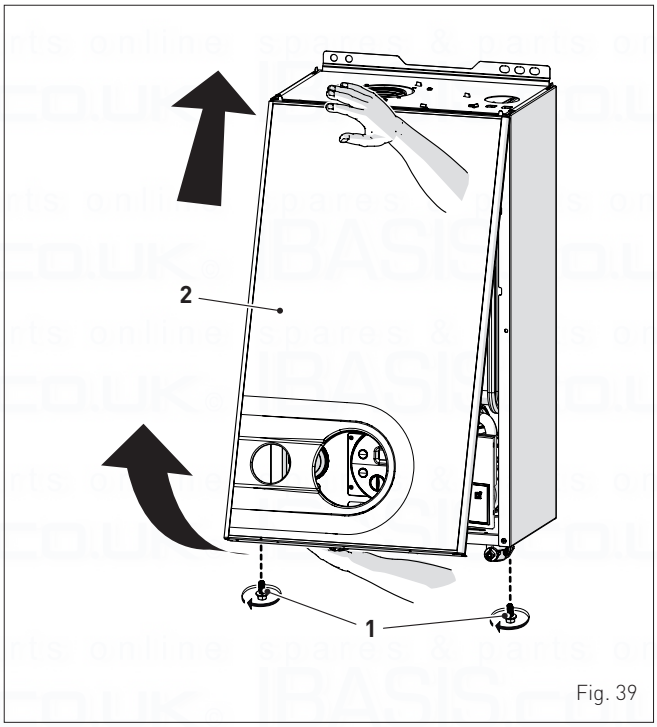

Fig. 39

- remove the screws (3) securing the control panel (4)
- move the panel (4) upwards (a) but keeping it in the side guides (5) to the end of travel
- bring it forwards and down (b) until it is horizontal

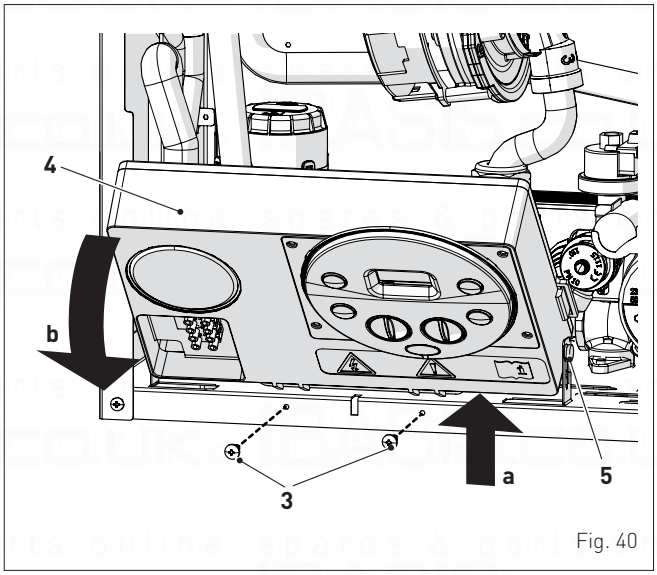

Fig. 40

- loosen the clips (6) and extract the air inlet pipe (7)
- unscrew the swivel joint (8)
- extract the connectors (9) from the fan and disconnect the electrode cable (10)

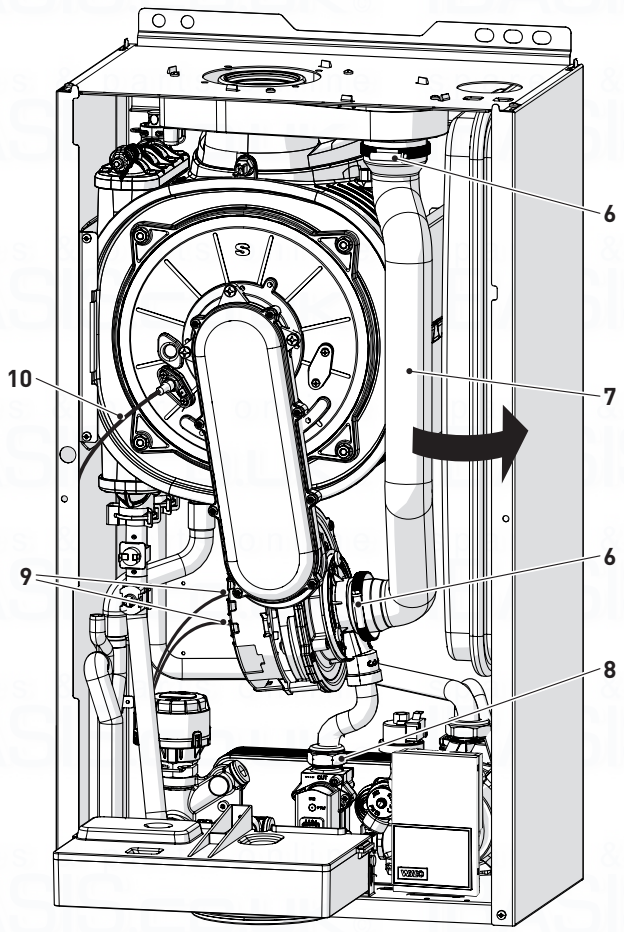


Fig. 41

- Unscrew the four nuts (11) securing the combustion chamber door (12)
- pull the fan-sleeve-door assembly (13) forwards and remove it.

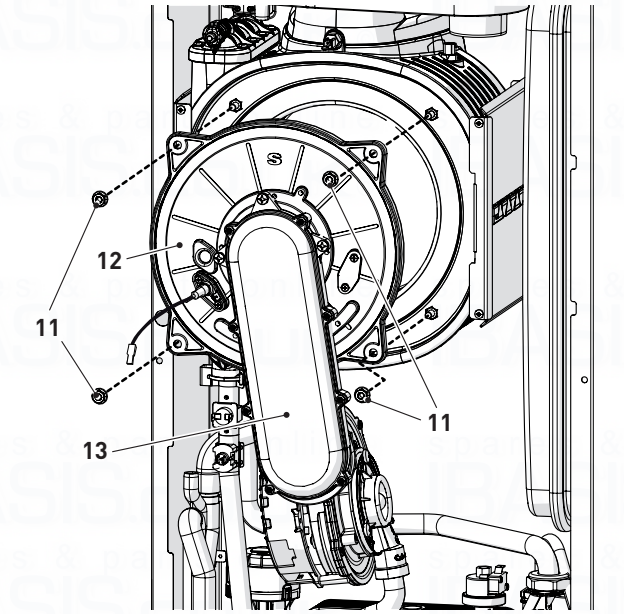


Fig. 42

**CAUTION**
**Work carefully when removing the assembly (13) to prevent any damage occurring to the internal insulation of the combustion chamber and the door seal.**

### 8.3.2 Cleaning the burner and the combustion chamber

The combustion chamber and the burner do not require any particular maintenance. Simply brush them with a soft brush.

### 8.3.3 Checking the ignition/detection electrode

Check the state of the ignition/detection electrode and replace if necessary. Check the measurements as per the drawing whether the ignition/detection electrode is replaced or not.

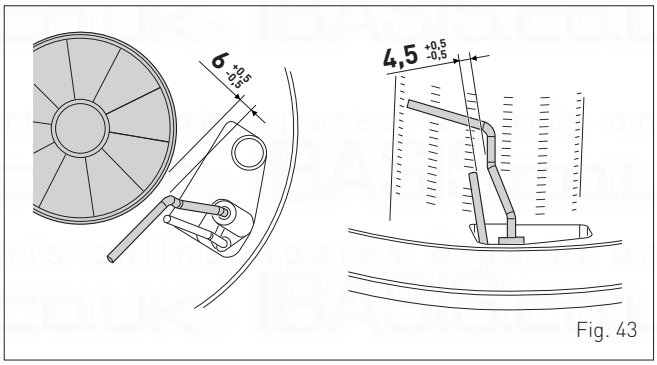


Fig. 43

### 8.3.4 Final operations

After having cleaned the combustion chamber and the burner:
- remove any carbon residue
- check that the seal and the insulation of the door (12) to the combustion chamber are undamaged. Replace if necessary
- refit the assembly by carrying out the same operations for removal but in the reverse order and tighten the screws (11) of the door to the combustion chamber
- reconnect the connections to the fan and the electrode.

## 8.4 Checks

### 8.4.1 Checking the flue

Check that the flue is undamaged and complete.

### 8.4.2 Checking the expansion vessel pressure

Close the flow and return valves and drain the boiler. Check the expansion vessel pressure is not less than **1 bar**. If this is not the case, pressurize it to the correct value (see section **Expansion vessel**" page 17.

### 8.4.3 System Inhibiter concentration

Check and if required correct the inhibiter concentration.

Once the checks described above have been completed:
- refill the boiler as described in section "**SYSTEM Filling** page 29"
- check that the siphon has been filled correctly
- activate the "**Chimney sweep function**" page 37 and carry out combustion analysis as detailed in Appendix 2
- refit the front panel securing it with the two screws which were removed previously
- complete the service record in this manual.

## 8.5 Circuit Board Replacement

Should the circuit board be replace, the engineer **MUST set the parameters** as indicated in this table.

| Type | No. | Description | Setting for Murelle Pro HE ErP | |
|---|---|---|---|---|
| | | | 25 | 30 |
| tS | 0.1 | Index showing boiler power in kW<br>1 = 25<br>2 = 30 | 1 | 2 |
| tS | 0.2 | Hydraulic configuration<br>0 = combi<br>1 = N/A<br>2 = N/A<br>3 = N/A<br>4 = N/A<br>5 = N/A | 0 | |
| tS | 0.3 | Gas Type Configuration<br>0 = G20; 1 = G31 | 0 or 1 | |

To enter "**Parameter setting and display**" see page 35.
Once the parameters in the table have been set, you must carry out the entire phase of "**Self-calibrating procedure**" described at page 34.
If the **gas valve** and/or the **ignition/detection electrode**, and/or the **burner**, and/or the **fan** are replaced, the engineer must still carry out the entire phase of "**Self-calibrating procedure**" described at page 34.

## 8.6 Possible faults and solutions

### LIST OF MALFUNCTION/FAULT ALARMS

| Type | No. | Fault | Solution |
|---|---|---|---|
| AL | 02 | Low water pressure in system | - Restore pressure<br>- Check for any leaks in the system |
| AL | 03 | High water pressure in system | - Empty the system via the drain valve on the hydraulic assembly and bring the pressure to approximately 1.2 bar |
| AL | 04 | Domestic hot water sensor (SS) fault | - Check connections<br>- Replace the sensor |
| AL | 05 | Delivery sensor (SM) fault | - Check connections<br>- Replace the sensor |
| AL | 06 | No flame detection | - Check the integrity of the electrode and check that it is not grounded<br>- Check gas availability and pressure<br>- Check the operation of the gas valve |
| AL | 07 | Safety thermostat (TS), intervention | - Check the sensor or thermostat connections<br>- Deaerate the system<br>- Check the bleed valve<br>- Replace the sensor or the thermostat<br>- Check that the pump impeller is not blocked |
| AL | 08 | Fault in the flame detection circuit | - Check the integrity of the electrode and check that it is not grounded<br>- Check gas availability and pressure<br>- Check the operation of the gas valve |
| AL | 09 | No water circulating in the system | - Check the rotation of the system pump impeller<br>- Check the electrical connections<br>- Replace the pump |
| AL | 10 | Auxiliary sensor fault | - Check the hydraulic configuration using "tS 0.2"<br>- Check the electrical connection |
| AL | 11 | Gas valve modulator disconnected | - Check the electrical connection |
| AL | 12 | Incorrect configuration of the open / sealed chamber | - Set the parameter tS 0.4 (Combustion configuration) to 0 |
| AL | 13 | Exhaust sensor (SF) intervention | - Replace the smoke probe<br>- Contact the Technical Assistance Centre |
| AL | 14 | Exhaust sensor (SF) fault | - Replace the smoke probe<br>- Check the electrical connection of the smoke probe, if the problem is not resolved, contact the Assistance Centre |
| AL | 15 | Fan check cable disconnected | - Check the connection cable between the fan and the board |
| AL | 18 | Condensate level fault | - Check for any clogging in the pipe which takes the condensate to the siphon<br>- Check that the siphon is not clogged |
| AL | 28 | Maximum number of consecutive resets reached (6) | - Contact the Technical Assistance Centre |
| AL | 37 | Fault due to low network voltage. | - Check with tester<br>- Contact network provider (ENEL) |
| AL | 40 | Incorrect supply frequency detected | - Contact network provider (ENEL) |
| AL | 41 | Flame loss more than 6 consecutive times | - Check the detection electrode<br>- Check the gas supply (open valve)<br>- Check mains gas pressure |
| AL | 42 | Button fault | - Check that buttons are working |
| AL | 43 | Open Therm communication fault | - Check the electrical connection of the remote control |
| AL | 62 | Self-calibrating procedure is required | - Carry out the self-calibrating procedure (see the specific section) |
| AL | 72 | Incorrect positioning of the delivery sensor | - Check that the delivery sensor is attached to the delivery pipe |
| AL | 81 | Block due to combustion during start-up | - Check for blockage in flue<br>- Bleed the air from the gas circuit |
| AL | 83 | Irregular combustion (temporary error) | - Check for blockage in flue |
| AL | 96 | Lockout due to flue (exhaust) blockage | - Check for blockage in flue |
| - | - | Frequent relief valve intervention | - Check circuit pressure<br>- Check expansion vessel |
| - | - | Limited production of domestic hot water | - Check the diverter valve<br>- Check that plate heat exchanger is clean<br>- Check domestic hot water circuit valve |

sime

# GAS BOILER SYSTEM COMMISSIONING CHECKLIST

**This Commissioning Checklist is to be completed in full by the competent person who commissioned the boiler as a means of demonstrating compliance with the appropriate Building Regulations and then handed to the customer to keep for future reference.**
Failure to install and commission according to the manufacturer's instructions and complete this Benchmark Commissioning Checklist will invalidate the warranty. This does not affect the customer's statutory rights.

| | |
|---|---|
| Customer name: | Telephone number: |
| Address: | |
| Boiler make and model: | |
| Boiler serial number: | |
| Commissioned by (PRINT NAME): | Gas Safe register number: |
| Company name: | Telephone number: |
| Company address: | |
| | Commissioning date: |
| **To be completed by the customer on receipt of a Building Regulations Compliance Certificate*** | |
| Building Regulations Notification Number (if applicable): | |

| **CONTROLS** (tick the appropriate boxes) | | | | |
|---|---|---|---|---|
| Time and temperature control to heating | Room thermostat and programmer/timer | | Programmable room thermostat | |
| | Load/weather compensation | | Optimum start control | |
| Time and temperature control to hot water | Cylinder thermostat and programmer/timer | | Combination Boiler | |
| Heating zone valves | Fitted | | Not required | |
| Hot water zone valves | Fitted | | Not required | |
| Thermostatic radiator valves | Fitted | | Not required | |
| Automatic bypass to system | Fitted | | Not required | |
| Boiler interlock | | | Provided | |

| **ALL SYSTEMS** | | | | |
|---|---|---|---|---|
| The system has been flushed and cleaned in accordance with BS7593 and boiler manufacturer's instructions | | | Yes | |
| What system cleaner was used? | | | | |
| What inhibitor was used? | | Quantity | | litres |
| Has a primary water system filter been installed? | Yes | | No | |

| **CENTRAL HEATING MODE** measure and record: | | | | |
|---|---|---|---|---|
| Gas rate | | $m^3/hr$ | **OR** | $ft^3/hr$ |
| Burner operating pressure (if applicable) | | mbar | **OR** Gas inlet pressure | mbar |
| Central heating flow temperature | | | | °C |
| Central heating return temperature | | | | °C |

| **COMBINATION BOILERS ONLY** | | | | |
|---|---|---|---|---|
| Is the installation in a hard water area (above 200ppm)? | Yes | | No | |
| If yes, and if required by the manufacturer, has a water scale reducer been fitted? | Yes | | No | |
| What type of scale reducer has been fitted? | | | | |
| **DOMESTIC HOT WATER MODE** Measure and Record: | | | | |
| Gas rate | | $m^3/hr$ | **OR** | $ft^3/hr$ |
| Burner operating pressure (at maximum rate) | | mbar | **OR** Gas inlet pressure at maximum rate | mbar |
| Cold water inlet temperature | | | | °C |
| Hot water has been checked at all outlets | Yes | | Temperature | °C |
| Water flow rate | | | | l/min |

| **CONDENSING BOILERS ONLY** | | |
|---|---|---|
| The condensate drain has been installed in accordance with the manufacturer's instructions and/or BS5546/BS6798 | Yes | |

| **ALL INSTALLATIONS** | | | | | | |
|---|---|---|---|---|---|---|
| Record the following: | At max. rate: | CO | ppm | **AND** | $CO/CO_2$ | Ratio |
| | At min. rate: (where possible) | CO | ppm | **AND** | $CO/CO_2$ | Ratio |
| The heating and hot water system complies with the appropriate Building Regulations | | | | | Yes | |
| The boiler and associated products have been installed and commissioned in accordance with the manufacturer's instructions | | | | | Yes | |
| The operation of the boiler and system controls have been demonstrated to and understood by the customer | | | | | Yes | |
| The manufacturer's literature, including Benchmark Checklist and Service Record, has been explained and left with the customer | | | | | Yes | |

| |
|---|
| Commissioning Engineer's Signature |
| Customer's Signature |
| (To confirm satisfactory demonstration and receipt of manufacturer's literature) |

*All installations in England and Wales must be notified to Local Authority Building Control (LABC) either directly or through a Competent Persons Scheme. A Building Regulations Compliance Certificate will then be issued to the customer.

benchmark COLLECTIVE MARK
THE MARK OF QUALITY FOR THE INSTALLATION, COMMISSIONING AND SERVICING OF DOMESTIC HEATING AND HOT WATER SYSTEMS
www.centralheating.co.uk

© Heating and Hotwater Industry Council (HHIC)

## SERVICE RECORD

**It is recommended that your heating system is serviced regularly and that the appropriate Service Interval Record is completed.**
**Service Provider**
Before completing the appropriate Service Record below, please ensure you have carried out the service as described in the manufacturer's instructions. Always use the manufacturer's specified spare part when replacing controls.

| SERVICE 01 | | | | | Date: |
|---|---|---|---|---|---|
| Engineer name: | | | | | |
| Company name: | | | | | |
| Telephone No: | | | | | |
| Gas safe register No: | | | | | |
| Record: | At max. rate: | CO | ppm | **AND** | $CO_2$ % |
| | At min. rate: (Where Possible) | CO | ppm | **AND** | $CO_2$ % |
| Comments: | | | | | |
| Signature | | | | | |

| SERVICE 02 | | | | | Date: |
|---|---|---|---|---|---|
| Engineer name: | | | | | |
| Company name: | | | | | |
| Telephone No: | | | | | |
| Gas safe register No: | | | | | |
| Record: | At max. rate: | CO | ppm | **AND** | $CO_2$ % |
| | At min. rate: (Where Possible) | CO | ppm | **AND** | $CO_2$ % |
| Comments: | | | | | |
| Signature | | | | | |

| SERVICE 03 | | | | | Date: |
|---|---|---|---|---|---|
| Engineer name: | | | | | |
| Company name: | | | | | |
| Telephone No: | | | | | |
| Gas safe register No: | | | | | |
| Record: | At max. rate: | CO | ppm | **AND** | $CO_2$ % |
| | At min. rate: (Where Possible) | CO | ppm | **AND** | $CO_2$ % |
| Comments: | | | | | |
| Signature | | | | | |

| SERVICE 04 | | | | | Date: |
|---|---|---|---|---|---|
| Engineer name: | | | | | |
| Company name: | | | | | |
| Telephone No: | | | | | |
| Gas safe register No: | | | | | |
| Record: | At max. rate: | CO | ppm | **AND** | $CO_2$ % |
| | At min. rate: (Where Possible) | CO | ppm | **AND** | $CO_2$ % |
| Comments: | | | | | |
| Signature | | | | | |

| SERVICE 05 | | | | | Date: |
|---|---|---|---|---|---|
| Engineer name: | | | | | |
| Company name: | | | | | |
| Telephone No: | | | | | |
| Gas safe register No: | | | | | |
| Record: | At max. rate: | CO | ppm | **AND** | $CO_2$ % |
| | At min. rate: (Where Possible) | CO | ppm | **AND** | $CO_2$ % |
| Comments: | | | | | |
| Signature | | | | | |

| SERVICE 06 | | | | | Date: |
|---|---|---|---|---|---|
| Engineer name: | | | | | |
| Company name: | | | | | |
| Telephone No: | | | | | |
| Gas safe register No: | | | | | |
| Record: | At max. rate: | CO | ppm | **AND** | $CO_2$ % |
| | At min. rate: (Where Possible) | CO | ppm | **AND** | $CO_2$ % |
| Comments: | | | | | |
| Signature | | | | | |

| SERVICE 07 | | | | | Date: |
|---|---|---|---|---|---|
| Engineer name: | | | | | |
| Company name: | | | | | |
| Telephone No: | | | | | |
| Gas safe register No: | | | | | |
| Record: | At max. rate: | CO | ppm | **AND** | $CO_2$ % |
| | At min. rate: (Where Possible) | CO | ppm | **AND** | $CO_2$ % |
| Comments: | | | | | |
| Signature | | | | | |

| SERVICE 08 | | | | | Date: |
|---|---|---|---|---|---|
| Engineer name: | | | | | |
| Company name: | | | | | |
| Telephone No: | | | | | |
| Gas safe register No: | | | | | |
| Record: | At max. rate: | CO | ppm | **AND** | $CO_2$ % |
| | At min. rate: (Where Possible) | CO | ppm | **AND** | $CO_2$ % |
| Comments: | | | | | |
| Signature | | | | | |

| SERVICE 09 | | | | | Date: |
|---|---|---|---|---|---|
| Engineer name: | | | | | |
| Company name: | | | | | |
| Telephone No: | | | | | |
| Gas safe register No: | | | | | |
| Record: | At max. rate: | CO | ppm | **AND** | $CO_2$ % |
| | At min. rate: (Where Possible) | CO | ppm | **AND** | $CO_2$ % |
| Comments: | | | | | |
| Signature | | | | | |

| SERVICE 10 | | | | | Date: |
|---|---|---|---|---|---|
| Engineer name: | | | | | |
| Company name: | | | | | |
| Telephone No: | | | | | |
| Gas safe register No: | | | | | |
| Record: | At max. rate: | CO | ppm | **AND** | $CO_2$ % |
| | At min. rate: (Where Possible) | CO | ppm | **AND** | $CO_2$ % |
| Comments: | | | | | |
| Signature | | | | | |

*All installations in England and Wales must be notified to Local Authority Building Control (LABC) either directly or through a Competent Persons Scheme. A Building Regulations Compliance Certificate will then be issued to the customer.

© Heating and Hotwater Industry Council (HHIC)

www.centralheating.co.uk

# 9 EXPLODED VIEWS

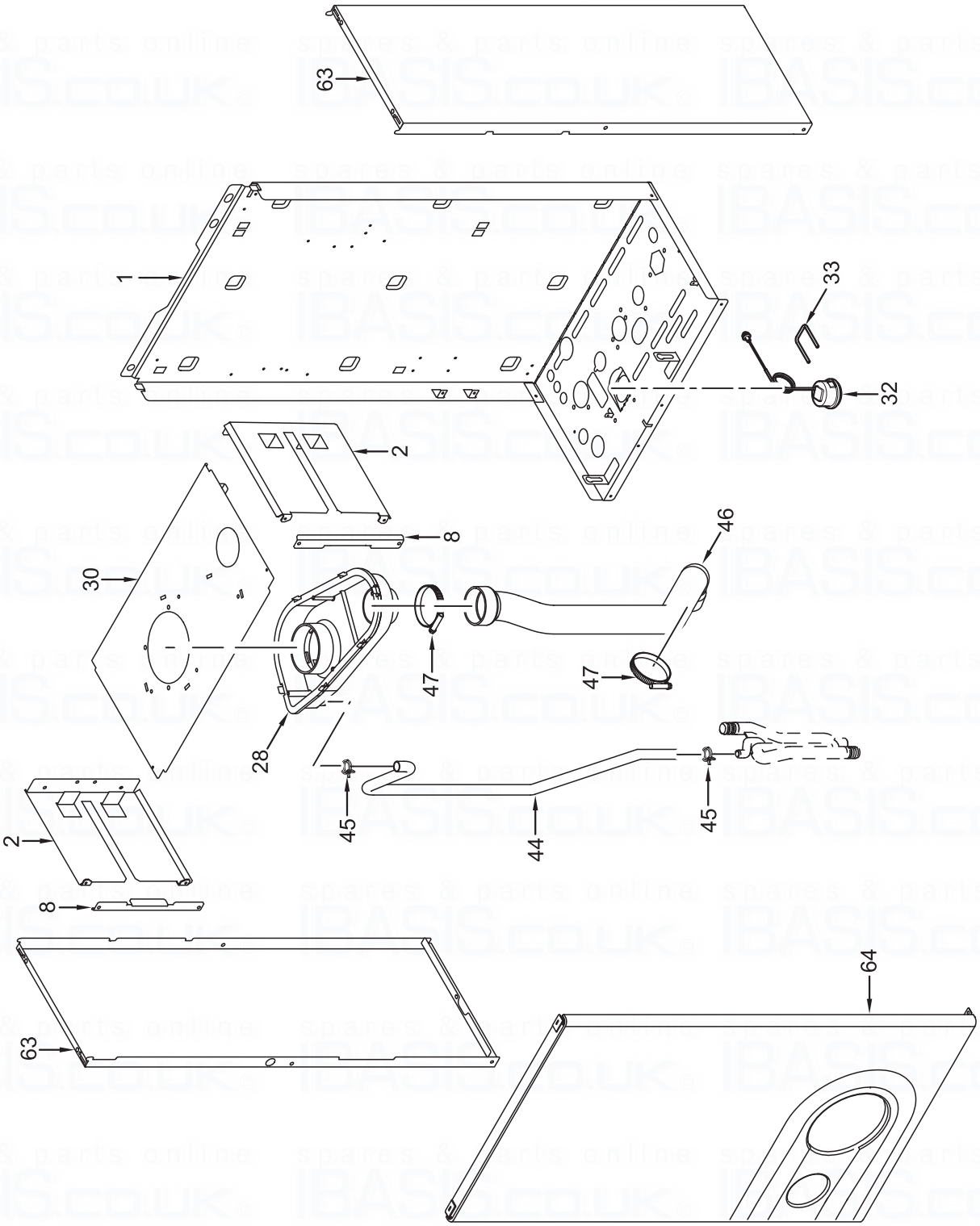


spares & parts online IBASIS.CO.UK

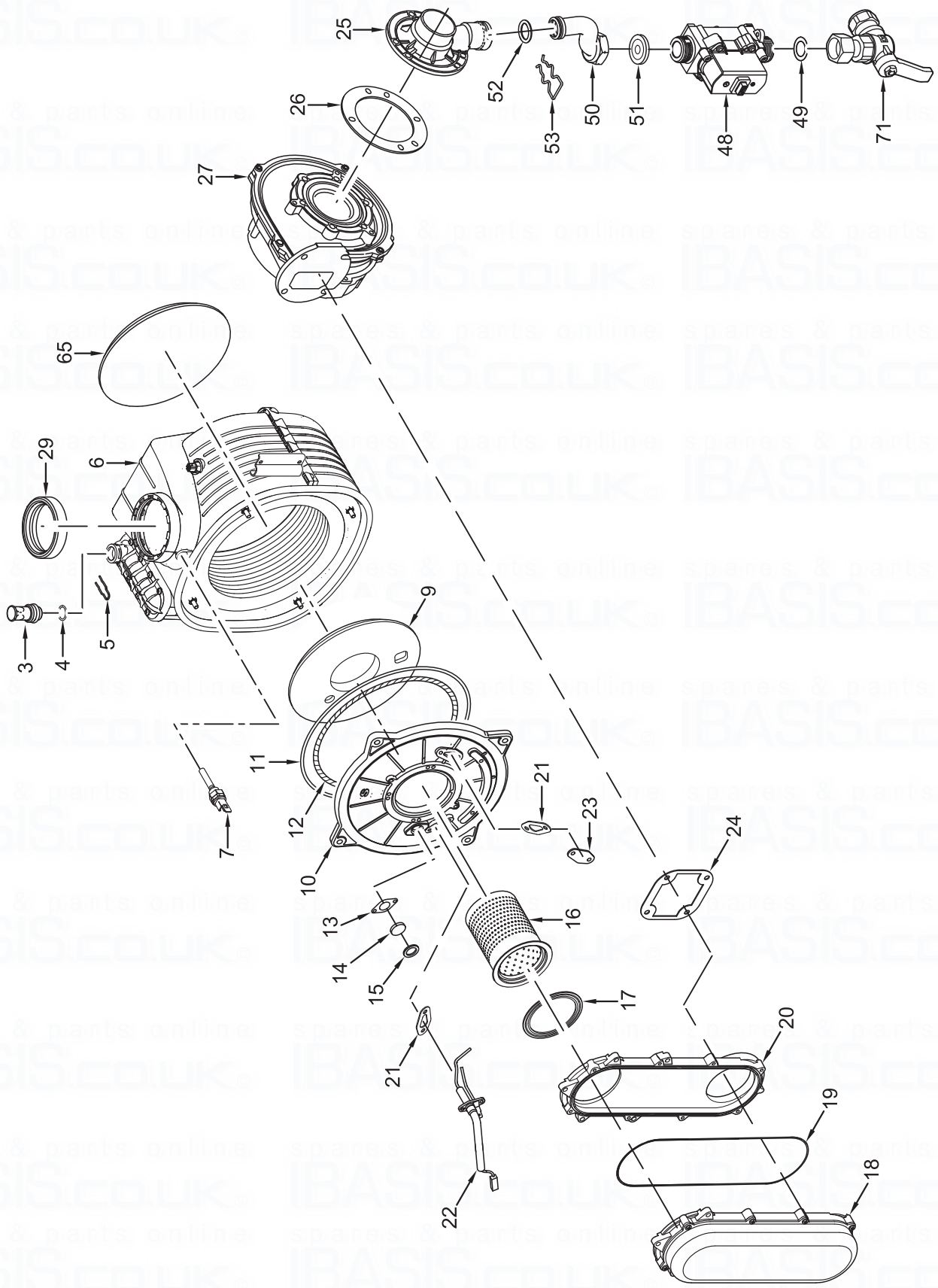


spares & parts online IBASIS.CO.UK

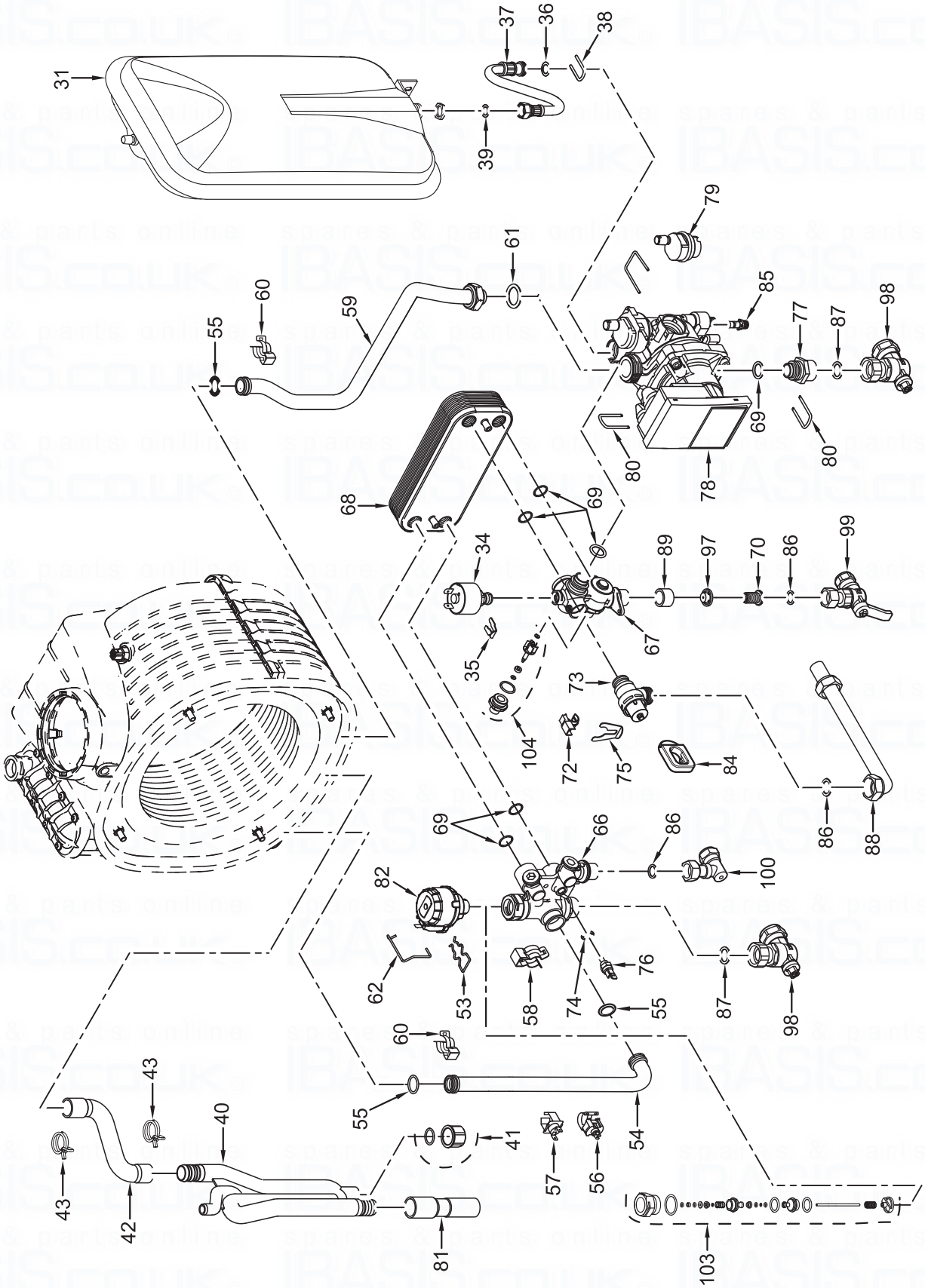
31
37
36
38
39
79
61
60
59
55
85
77
87
98
69
80
78
68
69
34
89
97
70
86
99
67
35
73
104
72
75
84
86
88
69
66
86
100
82
62
53
58
74
76
55
87
98
60
43
55
40
41
54
57
56
43
42
81
103

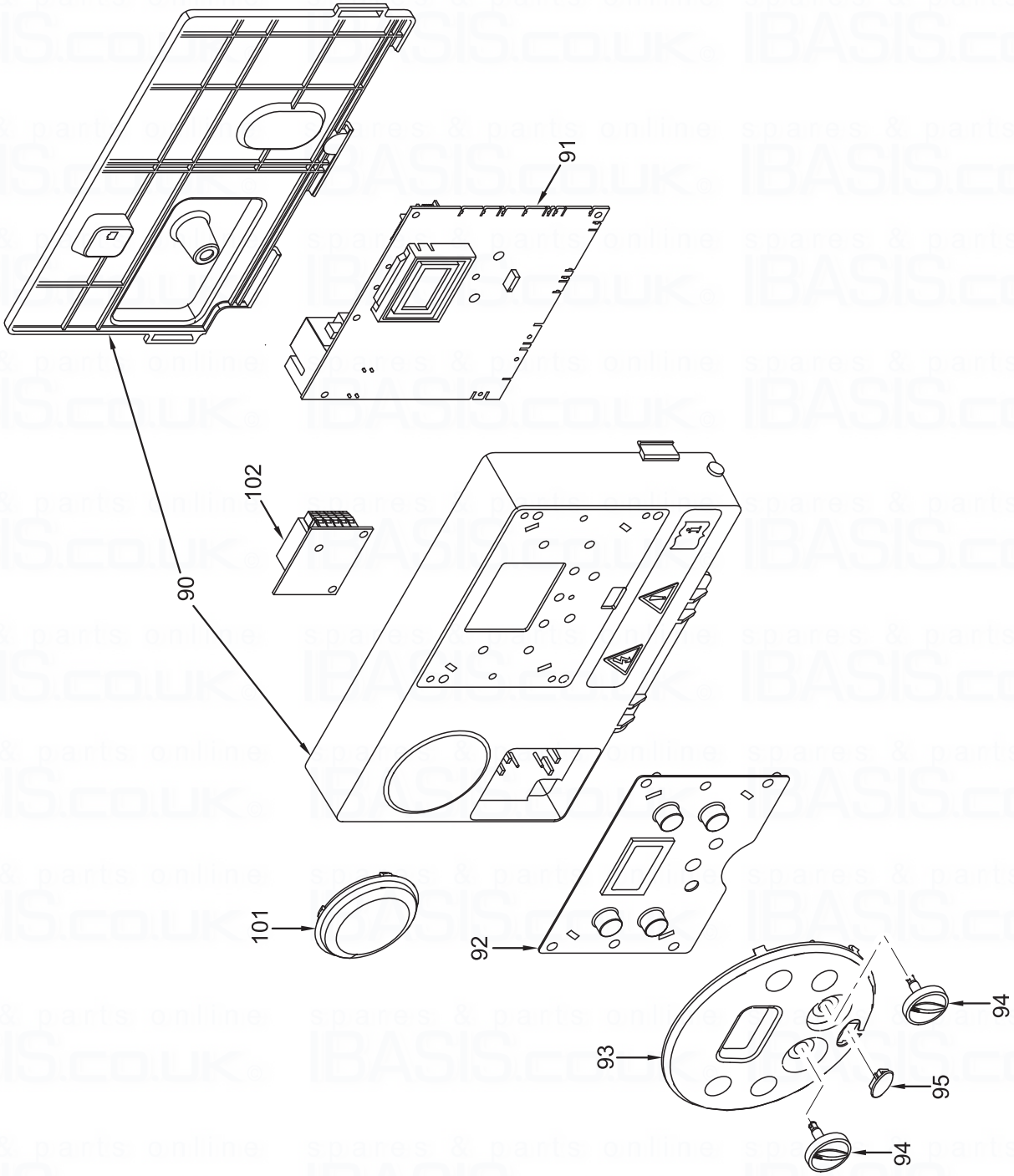


spares & parts online IBASIS.CO.UK

| Pos. | Code | Description | Murelle Pro HE | |
|---|---|---|---|---|
| | | | 25 | 30 |
| 1 | 6264560 | Boiler fixing bracket | X | X |
| 2 | 6010890 | Support exchangers bracket | X | X |
| 3 | 6147412 | Plug for air vent connection | X | X |
| 4 | 6226464 | O-ring 115 diam. 11,91x2,62 | X | X |
| 5 | 6226624 | Spring air vent knob | X | X |
| 6 | 6278913 | Main exchanger body | X | X |
| 7 | 6277130 | Probe NTC D.4X40 | X | X |
| 8 | 6010892 | Support exchangers bracket | X | X |
| 9 | 6269008 | Main exchanger door insulation | X | X |
| 10 | 5188360 | Main exchanger door | X | X |
| 11 | 6248870 | Combustion chamber O-ring | X | X |
| 12 | 6248871 | Glass fibre sealing cord | X | X |
| 13 | 6311810 | Glass fixing flange | X | X |
| 14 | 6020103 | Sight glass | X | X |
| 15 | 6248872 | Sight glass gasket | X | X |
| 16 | 6278370 | Premix burner | X | X |
| 17 | 6174828 | Gasket for burner flange | X | X |
| 18 | 6278892 | Air-gas hose | X | X |
| 19 | 6174819 | Air-gas hose gasket | X | X |
| 20 | 6278891 | Side low air-gas hose | X | X |
| 21 | 6174809 | Gasket for ignition electrode | X | X |
| 22 | 6221670 | Ignition-ionisation electrode | X | X |
| 23 | 6285950 | Bracket | X | X |
| 24 | 6174816 | Gasket for fan flange | X | X |
| 25 | 6274390 | Air/gas mixer | X | X |
| 26 | 6028703 | Gasket for duct flange | X | X |
| 27 | 6261412 | Fan | X | X |
| 28 | 6278703 | Smoke chamber | X | X |
| 29 | 6248855 | P.C. inlet/oulet smokes gasket | X | X |
| 30 | 6291150 | Upper protection shield | X | X |
| 31 | 5183729 | Rectang. expans.vessel 9 l. 3/8" M | X | X |
| 32 | 6146101 | Hydrometer | X | X |
| 33 | 6226628 | Hydrometer Fixing spring | X | X |
| 34 | 6037510 | Water pressure switch | X | X |
| 35 | 6226639 | Spring clip | X | X |
| 36 | 6226476 | ORing diam.15x2 | X | X |
| 37 | 6017405 | Flexible pipe M.F. 3/8" L=300 | X | X |
| 38 | 6226643 | Pipe fixing spring | X | X |
| 39 | 2030226 | Gasket Ø 10,2x14,8x2 | X | X |
| 40 | 6277211 | Water trap | X | X |
| 41 | 6119381 | Cap G 1/2" | X | X |
| 42 | 6034155 | Condensate drainage pipe | X | X |
| 43 | 2051123 | Clamp diam. 24,2 | X | X |
| 44 | 1010215 | Rubber pipe dia. 15x2,5 | X | X |
| 45 | 2051120 | Clamp diam. 17,3 | X | X |
| 46 | 6001162 | Air intake pipe 40 | X | X |
| 47 | 2051203 | Hose clamp Ø 40-60 | X | X |
| 48 | 6243838 | Gas valve | X | X |
| 49 | 2030249 | Gasket Ø 24x17x3 | X | X |
| 50 | 6277445 | Pipe connecting gas valve-mixer | X | X |
| 51 | 6050471 | Nozzle 530 | X | X |
| 52 | 6226477 | Rubber gasket OR Ø 17x3 | X | X |
| 53 | 6226636 | D.H.W. elektrovalve fix.spring | X | X |
| 54 | 6227462 | Flowing pipe to C.H. system | X | X |
| 55 | 6226412 | O-ring 3068 | X | X |
| 56 | 6231372 | Temperature sensor | X | X |
| 57 | 6146729 | 100° C safety stat | X | X |
| 58 | 6226601 | Spring for heat exchanger connection | X | X |
| 59 | 6227539 | Return pipe from C.H. system | X | X |

| Pos. | Code | Description | Murelle Pro HE | |
|---|---|---|---|---|
| | | | 25 | 30 |
| 60 | 6226619 | Spring for heat exchanger connection | X | X |
| 61 | 2030267 | Piracriten gasket Ø 30x17x2 | X | X |
| 62 | 6226638 | Divertor valve motor spring clip | X | X |
| 63 | 6304480 | casing left/right side panel | X | X |
| 64 | 6325050 | Front panel | X | X |
| 65 | 6281545 | Replacement rear insulat. kit | X | X |
| 66 | 6265871 | C.H. flow manifold | X | X |
| 67 | 6265830 | C.H. return manifold | X | X |
| 68 | 6265655 | 10 plate-type heat exchanger | X | |
| 68 | 6265656 | 12 plate-type heat exchanger | | X |
| 69 | 6226475 | ORing diam.18,64x3,53 | X | X |
| 70 | 6222003 | D.H.W. filter | X | X |
| 71 | 6177530 | Gas cock 3/4" F x 15 | X | X |
| 72 | 6131440 | Flowmeter sensor | X | X |
| 73 | 6040211 | Pressure relief valve 3 bar | X | X |
| 74 | 6022010 | Sensor gasket | X | X |
| 75 | 6226626 | Pipe fixing spring | X | X |
| 76 | 6231351 | Plunged sensor | X | X |
| 77 | 6120560 | Pump nipple 3/4" | X | X |
| 78 | 6272360 | Modulating circulating pump | X | X |
| 79 | 6013182 | Automatic air vent | X | X |
| 80 | 6226644 | Spring clip for rotating connection | X | X |
| 81 | 6034167 | Condensate drainage pipe | X | X |
| 82 | 6087332 | Motor for diverting valve | X | X |
| 84 | 6275910 | Pressure relief valve operation lever | X | X |
| 85 | 6319643 | Discharger cock | X | X |
| 86 | 2030227 | Gasket Ø 12x18x2 | X | X |
| 87 | 2030228 | Gasket Ø 17x24x2 | X | X |
| 88 | 6157653 | Pressure relief valve drain pipe | X | X |
| 89 | 6175180 | Flow control spacer | X | X |
| 90 | 6304720 | Control panel | X | X |
| 91 | 6324930 | Main PCB | X | X |
| 92 | 6305130 | Rubber button | X | X |
| 93 | 6304834 | Interface panel | X | X |
| 94 | 6290150 | Knob Ø 25 | X | X |
| 95 | 6305140 | Rubber cap | X | X |
| 97 | 6281430 | 12 l/min. flow control | X | |
| 97 | 6281431 | 14 l/min. flow control | | X |
| 98 | 6177505 | Ball cock 3/4" x 22 | X | X |
| 99 | 6177506 | Ball cock 1/2" x 15 | X | X |
| 100 | 6142330 | Quarter bend 1/2" x 15 | X | X |
| 101 | 6247370 | Cap for programmer clock | X | X |
| 102 | 6301461 | Programmer clock expansion board | X | X |
| 700 | 6281534 | Gaskets kit | X | X |
| 701 | 6319695 | Murelle-Format-.....o-ring kit | X | X |
| 702 | 6211794 | Peephole kit | X | X |
| 706 | 6323875 | 6 pole cable connector CN12 | X | X |
| 707 | 6323876 | 4 pole cable connector CN14 | X | X |
| 708 | 6323872 | 9 pole cable connector CN1 | X | X |
| 709 | 6323873 | 6 pole cable connector CN2 | X | X |
| 713 | 6319700 | Springs / clamps kit DIN | X | X |
| 714 | 6325609 | 14 pole cable connect.CN15+CN5 | X | X |
| 717 | 5202521 | Complete control panel | X | X |
| 718 | 6325626 | 4 pole cable connector CN13 | X | X |

# 10 APPENDIX 1 (GUIDANCE HHIC)

HEATING & HOTWATER INDUSTRY COUNCIL

**INDUSTRY GUIDANCE FOR INSTALLERS ON CONDENSATE**

**DRAINAGE PIPE INSTALLATION**

This guidance is endorsed by HHIC members.

## 1. BACKGROUND

During recent winters the UK has experienced prolonged spells of extremely cold weather - down to minus 20°C and below in many areas. This resulted in a significant increase in the number of calls to boiler manufacturers and heating engineers from householders with condensing (high efficiency) boilers where the condensate drainage pipe had frozen and become blocked with ice, causing the boiler to shut down. In the vast majority of cases such problems occur where the condensate drainage pipe is located externally to the building for some part of its length.

British Standards, Building Regulations etc. currently allow condensate drainage pipes to be run either internally or externally, or a combination of these. These documents give guidance on how to install the pipes in order to reduce the possibility of freezing. However this guidance may not be sufficient to prevent freezing in extreme conditions - with widespread and prolonged very low temperatures.

In view of the possibility that UK weather patterns will show more "extremes" in future due to the effects of global climate change, the following guidance updates previous recommendations on condensate drainage pipe installation. All other technical requirements for condensate drain installation given in British Standard BS 6798:2009, or in boiler manufacturers' installation instructions should still be followed.

## 2. REVISED GUIDANCE ON CONDENSATE DRAINAGE PIPE INSTALLATION

Where a new or replacement boiler is being installed, access to an internal "gravity discharge" termination should be one of the main factors considered when determining potential boiler locations, so that the condensate drainage pipe can be terminated as recommended below. On an existing installation, the guidance below should also be followed if work is carried out to "upgrade" the condensate drain age system to reduce the risk of freezing in extreme conditions.

Internal condensate drainage pipework must be a minimum of 19mm ID (typically 22mm OD) plastic pipe and this should "fall" at least 45 mm per metre *away* from the boiler, taking the shortest practicable route to the termination point.

In order to minimise the risk of freezing during prolonged very cold spells, one of the following methods of terminating condensate drainage pipe should be adopted -

## 2.1 INTERNAL TERMINATION:

Wherever possible, the condensate drainage pipe should be terminated at a suitable internal foul water discharge point such as (a) an internal soil and vent stack or (b) an internal kitchen or bathroom waste pipe, washing machine waste pipe etc. A suitable permanent connection to the foul waste pipe should be used. Figures 1, 2(a), 2(b) show appropriate connection methods.

The possibility of waste pipes freezing downstream of the connection point should be considered when determining a suitable connection point - e.g. a slightly longer pipe run to an internal soil stack may be preferable to a shorter run connecting into a kitchen waste pipe discharging directly through the wall to an external drain.

Where "gravity discharge" to an internal termination is not physically possible (e.g. the discharge point is above the appliance location, or access is obstructed by a doorway), or where very long internal pipe runs would be required to reach a suitable discharge point, the following measures may be adopted -

## 2.2 USE OF A CONDENSATE PUMP (TO AN INTERNAL TERMINATION):

Condensate can be removed using a proprietary condensate pump, of a specification recommended by the boiler or pump manufacturer.

The pump outlet should discharge to a suitable internal foul water discharge point, such as (a) an internal soil and vent stack or (b) an internal kitchen or bathroom waste pipe, washing machine waste pipe etc. Figure 3 shows a typical connection method.

A suitable permanent connection to the foul waste pipe should be used and the manufacturer's detailed installation instructions for the pump should be followed.

## 2.3 EXTERNAL TERMINATION:

The use of an externally-run condensate drainage pipe, terminating at a suitable foul water discharge point or purpose-designed soakaway, may be also be considered; however if this termination method is chosen then the following measures should be adopted -

The pipe should be run internally as far as possible before going externally and the pipe diameter should be increased to a minimum of 30mm ID (typically 32mm OD) before it passes through the wall.

The external run should be kept as short as possible, taking the most direct and "most vertical" route possible to the discharge point, with no horizontal sections in which condensate might collect.

The external pipe should be insulated using suitable waterproof and weatherproof insulation ("Class O" pipe insulation is suitable for this purpose) .

The use of fittings, elbows etc should be kept to a minimum and any internal "burrs" on cut pipework should be removed so that the internal pipe section is as smooth as possible.

The customer/householder should be advised that even with the above measures this type of installation could freeze, and that if this were to occur then boiler shutdown could result, requiring remedial action - possibly involving a chargeable engineer call-out.

Where there are likely to be extremes of temperature or wind-chill, the use of a proprietary trace-heating system for external condensate drainage pipework, incorporating an external frost thermostat, should therefore be considered. If such a system is used then the installation instructions of the trace heating manufacturer and any specific recommendations regarding pipe diameter, insulation, etc. should be followed. All other relevant guidance on condensate drainage pipe installation should also be followed.

*Other cold weather protection methods approved or endorsed by boiler manufacturers and/or service organisations may be adopted if these are considered suitable by the parties involved.*

If an external soil/vent stack is used as the external termination then the connection method shown in Figure 4 should be used, together with the measures on insulation etc. as described above and shown in the diagram.

When a rain water downpipe is used as the termination (***NB** only permissible if this downpipe passes to a combined foul and rainwater drainage system*) an air break must be installed between the condensate drainage pipe and the downpipe to avoid reverse flow of rainwater into the boiler should the downpipe itself become flooded or frozen. Figure 5 shows a suitable connection method.

Where the condensate drainage pipe is terminated over an open foul drain or gully, the pipe should terminate below the grating level, but above water level, in order to minimise "wind chill" at the open end. Pipe drainage will be improved if the end is cut at 45$^{o}$ as opposed to a straight cut. The use of a drain cover (such as those used to prevent blockage by leaves) may offer further protection from wind chill. Figure 6 shows a suitable connection method.

Where the condensate drain pipe terminates in a purpose-designed soakaway (see BS 6798:2009 or boiler installation manual for soakaway design requirements) any above-ground section of condensate drainage pipe should be run and insulated as described above. Figure 7 shows a suitable connection method.

## 3. UNHEATED INTERNAL AREAS:

Internal condensate drainage pipes run in unheated areas such as lofts, basements and garages should be treated as external pipe.

HHIC
HEATING & HOTWATER INDUSTRY COUNCIL

**NOTES**

*The Benchmark Commissioning Checklist should be completed as required to record details of the condensate drainage pipe installation.*

*Where an external condensate drainage pipe is installed, the customer should be made aware of the risks and consequences of its freezing and offered the option to fit trace heating (or other measures approved by the boiler manufacturer or service organisation).*

*Separate guidance has been published for householders on remedial actions which can be taken if a condensate drainage pipe freezes. This may result in requests for alteration to condensate drainage pipework, in which case the guidance above should be followed.*

*In some instances (e.g. where an elderly person's heating needs to be reinstated as an emergency measure) condensate drainage pipes may have been cut in order to bypass any blockage and allow re-ignition of the boiler, with condensate being collected in a suitable container as a temporary solution.*

*While not unsafe, this is not recommended practice and if such action has been taken then the condensate drainage pipe must be reinstated as soon as possible, using the above guidance to reduce risk of freezing in future.*

**Figure 1 – Connection of condensate drainage pipe to internal soil and vent stack**

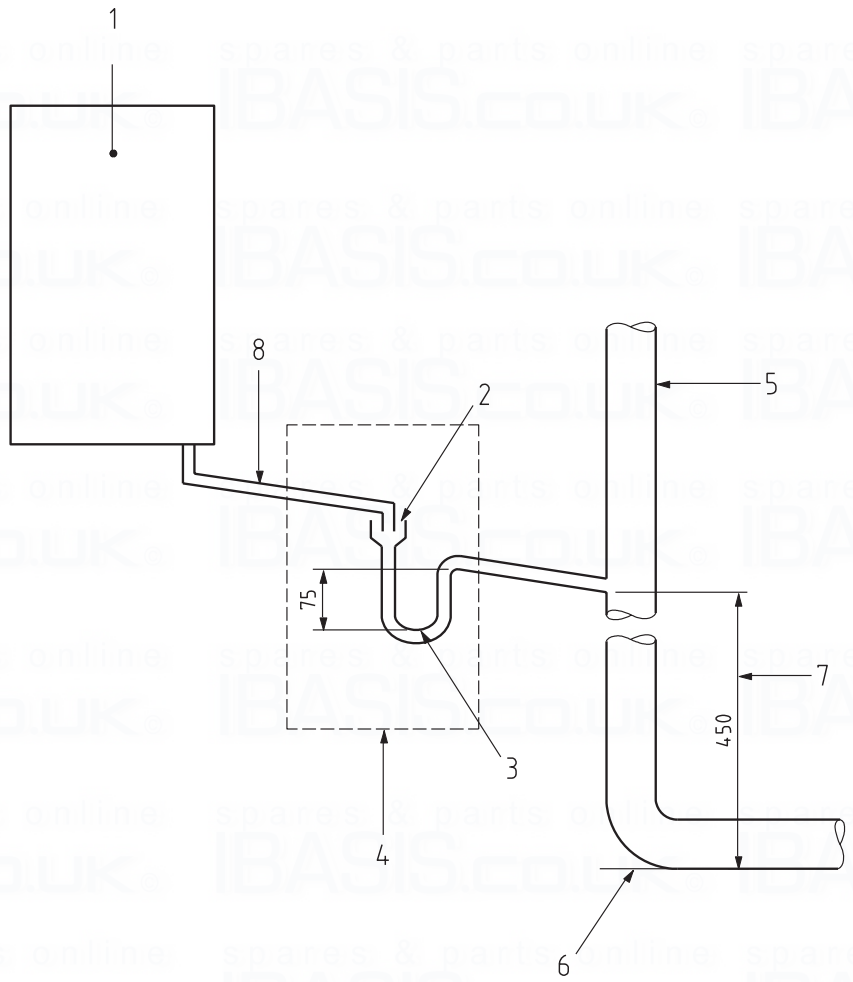


**Key**

1 Boiler
2 Visible air break
3 75 mm trap
4 Visible air break and trap not required if there is a trap with a minimum condensate seal of 75 mm incorporated into the boiler
5 Soil and vent stack
6 Invert
7 450 mm minimum up to three storeys
8 Minimum internal diameter 19 mm

**Figure 2(a) – Connection of a condensate drainage pipe downstream of a sink, basin, bath or shower waste trap**

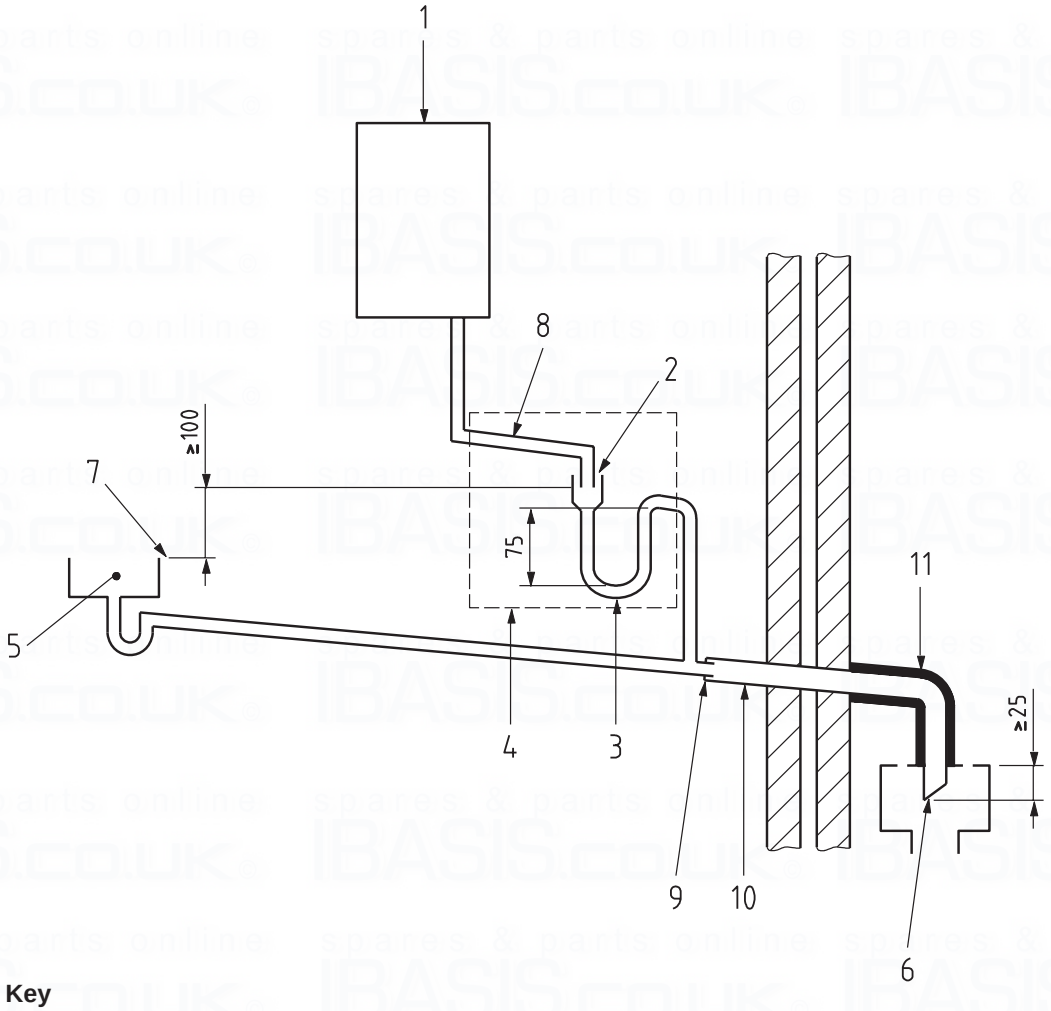


**Key**

1 Boiler
2 Visible air break
3 75 mm trap
4 Visible air break and trap not required if there is a trap with a minimum condensate seal of 75 mm incorporated into the boiler. In this case the 100 mm is measured to the trap in the boiler.
5 Sink, basin, bath or shower
6 Open end of condensate drainage pipe direct into gully 25 mm min below grating but above water level; end cut at 45 °
7 Sink lip
8 Minimum internal diameter 19 mm
9 Pipe size transition
10 Minimum internal diameter 30 mm
11 Water/weather proof insulation

**Figure 2(b) – Connection of a condensate drainage pipe upstream of a sink, basin, bath or shower waste trap**

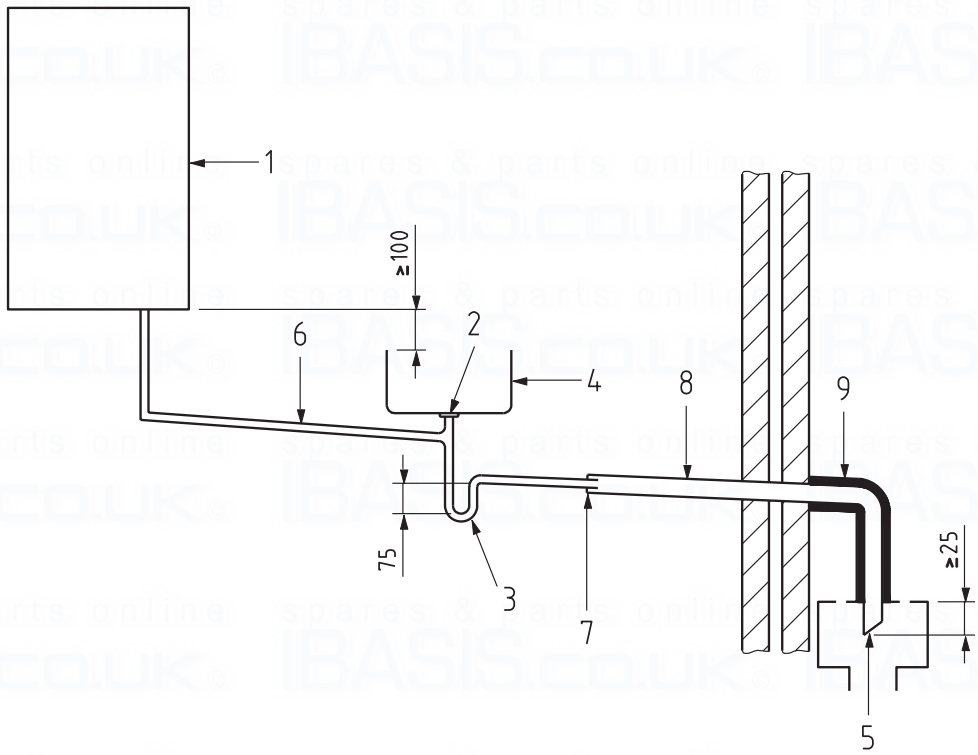


**Key**

1 Boiler
2 Visible air break at plug-hole
3 75 mm sink, basin, bath or shower waste trap
4 Sink, basin, bath or shower with integral overflow
5 Open end of condensate drainage pipe direct into gully 25 mm min below grating but above water level; end cut at 45 °
6 Minimum internal diameter 19 mm
7 Pipe size transition
8 Minimum internal diameter 30 mm
9 Water/weather proof insulation

**Figure 3 – Connection of a condensate pump - typical method (NB manufacturer's detailed instructions should be followed).**

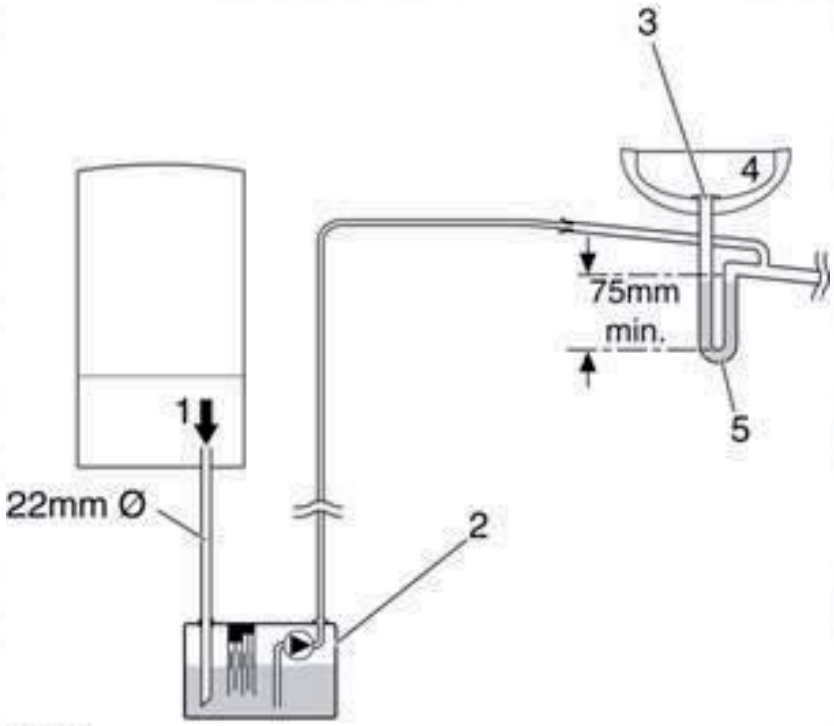


**Key**

1 Condensate discharge from boiler.
2 Condensate pump
3 Visible air break at plug hole.
4 Sink or basin with integrated overflow.
5 75mm sink waste trap.

**Figure 4 – Connection of condensate drainage pipe to external soil and vent stack**

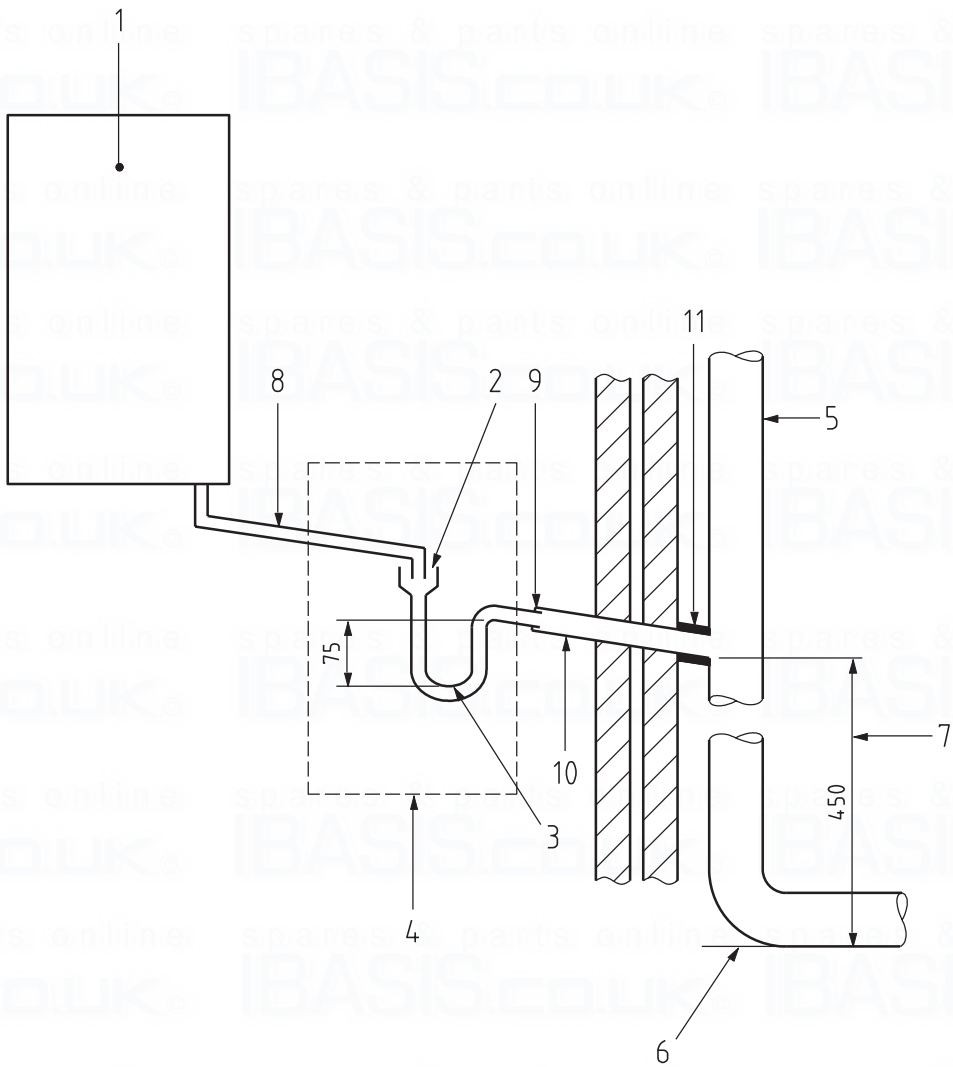


**Key**

| | | | |
|---|---|---|---|
| 1 | Boiler | 7 | 450 mm minimum up to three storeys |
| 2 | Visible air break | 8 | Minimum internal diameter 19 mm |
| 3 | 75 mm trap | 9 | Pipe size transition point |
| 4 | Visible air break and trap not required if there is a trap with a minimum condensate seal of 75 mm incorporated into the boiler. | 10 | Minimum internal diameter 30 mm |
| | | 11 | Water/weather proof insulation |
| 5 | Soil and vent stack | | |
| 6 | Invert | | |

**Figure 5 – External termination to rainwater downpipe (NB only combined foul/rainwater drain)**

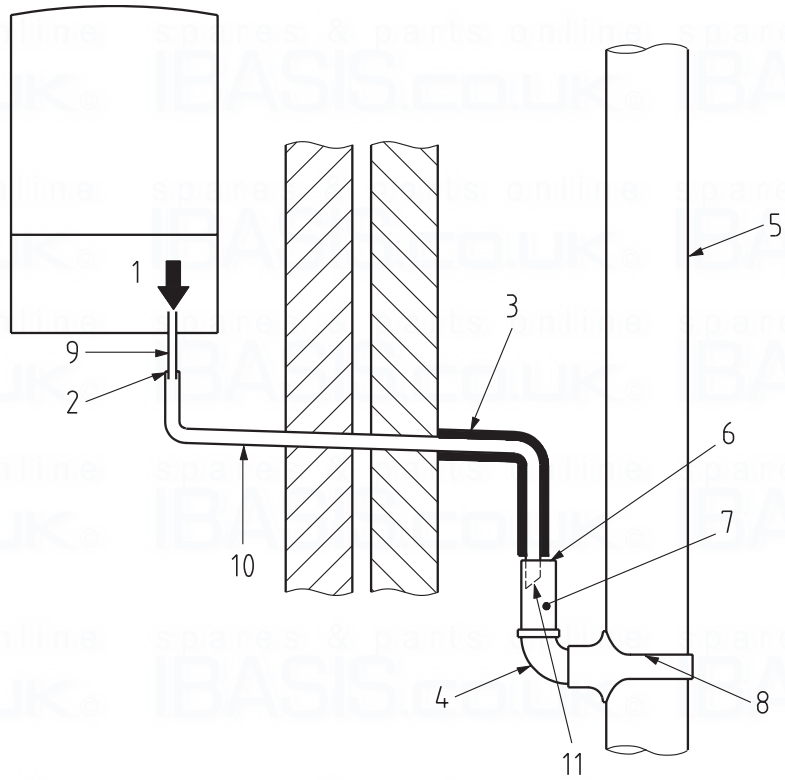


**Key**

| | | | |
|---|---|---|---|
| 1 | Condensate discharge pipe from boiler | 7 | Air gap |
| 2 | Pipe size transition point | 8 | 68 mm Ø PVCu strap-on fitting |
| 3 | Water/weather proof insulation | 9 | Minimum internal diameter 19 mm |
| 4 | 43 mm 90° male/female bend | 10 | Minimum internal diameter 30 mm |
| 5 | External rain water pipe into foul water | 11 | End cut at 45 ° |
| 6 | External air break | | |

**Figure 6 – External drain, gully or rainwater hopper**

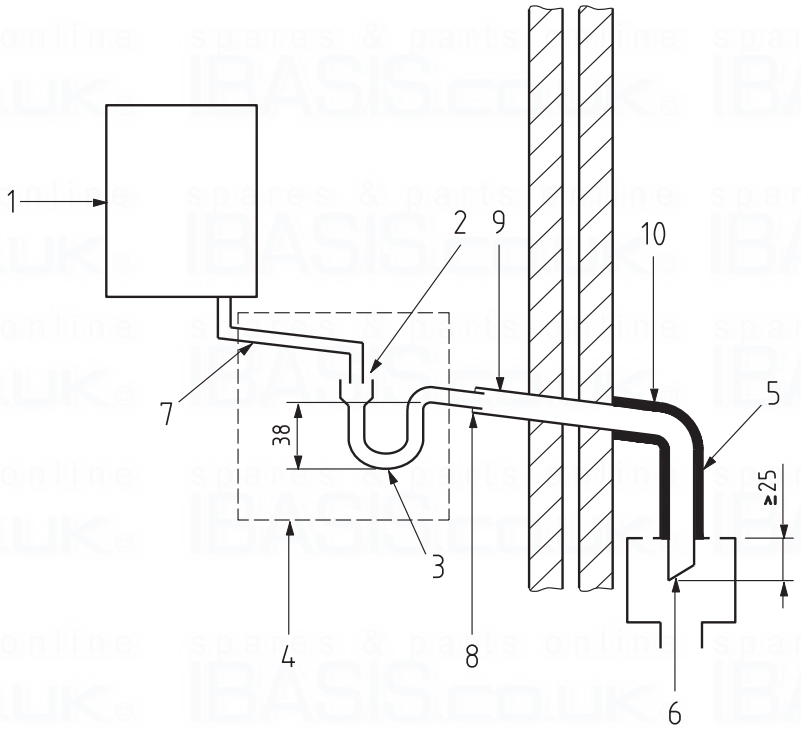


**Key**

1 Boiler
2 Visible air break
3 38 mm minimum trap
4 Visible air break and trap not required if there is a trap with a minimum condensate seal of 38 mm incorporated into the boiler
5 External length of pipe 3 m maximum
6 Open end of condensate drainage pipe direct into gully 25 mm min below grating but above water level; end cut at 45 °
7 Minimum internal diameter 19 mm
8 Pipe size transition point
9 Minimum internal diameter 30 mm
10 Water/weather proof insulation

**Figure 7 – Example of a purpose-made soakaway**

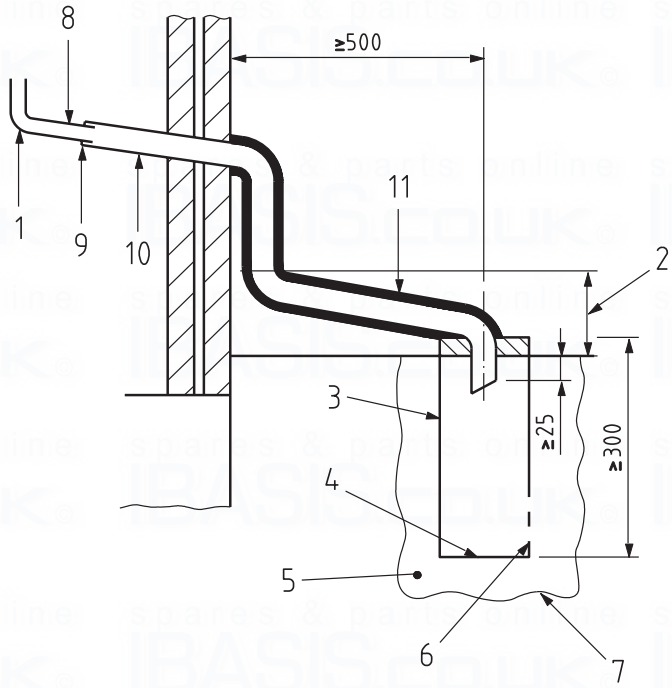


**Key**

1 Condensate discharge pipe from boiler
2 Ground (this section of the condensate drainage pipe may be run either above or below ground level); End cut at 45 °
3 Diameter 100 mm minimum plastic tube
4 Bottom of tube sealed
5 Limestone chippings
6 Two rows of three 12 mm holes at 25 mm centres, 50 mm from bottom of tube and facing away from house
7 Hole depth 400 mm minimum by 300 mm diameter
8 Minimum internal diameter 19 mm
9 Pipe size transition point
10 Minimum internal diameter 30 mm
11 Water/weather proof insulation

# 11 APPENDIX 2

**FLOWCHART FOR CO AND COMBUSTION RATIO CHECK ON COMMISSIONING A CONDENSING BOILER**

**PRIOR TO CO AND COMBUSTION RATIO CHECK**

The installation instructions should have been followed, gas type verified and gas supply pressure/rate checked as required prior to commissioning.

As part of the installation process, **ESPECIALLY WHERE A FLUE HAS BEEN FITTED BY PERSONS OTHER THAN THE BOILER INSTALLER**, visually check the integrity of the whole flue system to confirm that all components are correctly asembled, fixed and supported. Check that manufacturer's maximum flue lengths have not been exceeded and all guidance has been followed (e.g. Gas Safe Technical Bulletin TB008).

The flue gas analyser should be of the correct type, as specified by BS 7967

Prior to its use, the flue gas analyser should have been maintained and calibrated as specified by the manufacturer. The installer must have the relevant competence for use of the analyser.

Check and zero the analyser IN FRESH AIR as per analyser manufacturer's instructions.

**NOTE**

**the air gas ratio valve is factory-set and must not be adjusted DURING COMMISSIONING unless this action is recommended after discussions with SIME LTD.**

**If any such adjustment is recommended and further checking of the boiler is required the installer/service engineer must be competent to carry out this work and to use the flue gas analyser accordingly.**

**If the boiler requires conversion to operate with a different gas family (e.g. conversion from natural gas to LPG) separate guidance will be provided by the boiler manufacturer and must be followed.**

**SET BOILER TO MAXIMUM RATE**

Set the boiler to operate at maximum rate (full load condition). Allow sufficient time for combustion to stablilise.

**NOTE - Do not insert analyser probe during this period to avoid possible "flooding" of sensor.**

**CARRY OUT FLUE INTEGRITY CHECK USING ANALYSER**

Insert analyser probe into the air inlet test point and allow readings to stabilise.

**NOTE - The flue must always be installed with flue test point. This will be located within the first piece connected to the boiler.**

**Is $O_2$ less than or equal to 20.6% and $CO_2$ less than 0.2%**

NO

**VERIFY FLUE INTEGRITY**

Analyser readings indicate that combustion products and inlet air must be mixing. Further investigation of the flue is therefore required.

Check that flue components are assembled, fixed and supported as per boiler/flue manufacturer's instructions.

Check that flue and flue terminal are not obstructed.

**Is $O_2$ less than or equal to 20.6% and $CO_2$ less than 0.2%**

YES

NO

Turn off appliance and call SIME LTD Technical Helpllne for advice.

the appliance must not be commissioned or used, until problems are identified and resolved.

YES

**CHECK CO AND COMBUSTION RATIO AT MAXIMUM RATE**

With boiler still set at maximum rate, insert analyser probe into flue gas samplng point. Allow readings to stablise before recording.

**Is CO less than 350ppm AND $CO/CO_2$ ratio less than 0.004**

NO

Check all seals around the appliance burner, internal flue seals, door and case seals. Rectify where necessary.

**Is CO less than 350ppm AND $CO/CO_2$ ratio less than 0.004**

YES

NO

**Turn off appliance and call SIME LTD Technical Helpllne for advice.**

**the appliance must not be commissioned or used until problems are identified and resolved.**

**NOTE**

**Check and record CO and combustion ratio at both maximum AND minimum rate before contacting SIME LTD.**

YES

**SET BOILER TO MINIMUM RATE**

In accordance with boiler instructions, set boiler to operate at minimum rate (to minimum load condition). Allow sufficient time for combustion to stablilise.

**NOTE: If manufacturer's instructions do not specify how to set boiler to minimum rate contact Technical Helpline for advice.**

**CHECK CO AND COMBUSTION RATIO AT MINIMUM RATE**

With boiler set at minimum rate, insert analyser probe into flue gas samplng point. Allow readings to stablise before recording.

**NOTE - if no flue gas sampling point is present and the correct procedure is not specified in the manual, contact SIME LTD Technical Helpline for advice.**

**Is CO less than 350ppm AND $CO/CO_2$ ratio less than 0.004**

NO

YES

**BOILER IS OPERATING SATISFACTORILY**
**no further actions required**

**Ensure test points are capped, boiler case is correctly repleced and all other commissioning procedures are completed.**

**Complete Benchmark Checklist, recording CO and combustion ratio readings as required.**

# 12 PRODUCT DATA SHEET

| Murelle PRO HE | 25 ErP | 30 ErP |
|---|---|---|
| Profilo sanitario di carico dichiarato<br>D.H.W load profile declared | XL | XL |
| Classe efficienza energetica stagionale riscaldamento<br>C.H. energy efficiency class | A | A |
| Classe efficienza energetica sanitario<br>D.H.W. energy efficiency class | A | A |
| Potenza termica (kW)<br>Heat output (kW) | 24 | 28 |
| Consumo annuo di energia riscaldamento (kWh)<br>C.H. annual energy consumption (kWh) | 103 | 124 |
| Consumo annuo di combustibile sanitario (GJ)<br>D.H.W. annual combustible consumption (GJ) | 18 | 19 |
| Efficienza energetica stagionale riscaldamento (%)<br>C.H. seasonal energy efficiency (%) | 92 | 91 |
| Efficienza energetica sanitario (%)<br>D.HW. energy efficiency (%) | 80 | 80 |
| Potenza sonora dB(A)<br>Sound power dB(A) | 54 | 56 |

**Specifiche precauzioni da adottare al momento del montaggio, dell'installazione o della manutenzione dell'apparecchio sono contenute all'interno del manuale di istruzioni della caldaia**
**Specific precautionary measures to be adopted at the time of assembly, installation or maintenance of the equipment are contained in the boiler instruction manual**

**Conforme all'allegato IV (punto 2) del regolamento delegato (UE) N° 811/2013 che integra la Direttiva 2010/30/UE**
**Conforming to Annex IV (item 2) of the Delegated Regulations (EU) No. 811/2013 which supplements Directive 2010/30/EU**

spares & parts online IBASIS.CO.UK®

**Sime Ltd**
1a Blue Ridge Park
Thunderhead Ridge
Glasshoughton, Castleford, WF10 4UA

Phone: 0845 9011114
Fax: 0845 9011115

www.sime.co.uk
Email: enquiries@sime.co.uk