UK

Cod. 6322860 - 07/2015

MURELLE ELITE
HE 30 - 35 - 35 T ErP

USER, INSTALLATION AND SERVICING INSTRUCTIONS

ENSURE THAT THESE INSTRUCTIONS ARE LEFT FOR THE USER AFTER COMPLETION OF THE BENCHMARK SECTION

PLEASE READ THE IMPORTANT NOTICE WITHIN THIS GUIDE REGARDING YOUR BOILER WARRANTY

GAS safe REGISTER

199838

benchmark COLLECTIVE MARK

THE MARK OF QUALITY FOR THE INSTALLATION, COMMISSIONING AND SERVICING OF DOMESTIC HEATING AND HOT WATER SYSTEMS

sime®

spares & parts online IBASIS.CO.UK

IMPORTANT NOTICE

For the first year all of our appliances are protected by our manufacturer's guarantee which covers both parts and labour.
As you would expect from Sime Ltd, it is our aim to provide our valued customers with the best in after sales and service.
To take advantage of any extended warranty offered, all you have to do is to adhere to these 3 simple conditions:

- The installation must be carried out to Manufacturers/Benchmark Standards by a Gas Safe Registered Engineer, and recorded in the installation manual.
- The appliance must be registered with both Sime Ltd and Gas Safe within 30 days of installation.
- The appliance must be serviced every 12 months, within 30 days of the anniversary of the installation date, by either Sime Ltd or a Gas Safe registered engineer- ensuring that the Benchmark service record in the installation manual is completed.

Failure to comply with the above will result in only the 12 month warranty being offered.
In the absence of any proof of purchase, the 12 month warranty period will commence from the date of manufacture of the boiler as shown on the appliance data plate.

SAFE HANDLING

This boiler may require 2 or more operatives to move it into its installation site, remove it from its packaging and during movement into its installation location. Manoeuvring the boiler may include the use of a sack truck and involve lifting pushing and pulling.
Caution should be exercised during these operations.

Operatives should be knowledgeable in handling techniques when performing these tasks and the following precautions should be considered:
- Grip the boiler at the base
- Be physically capable
- Use personal protective equipment as appropriate e.g. gloves, safety footwear.

During all manoeuvres and handling actions, every attempt should be made to ensure the following unless unavoidable and/or the weight is light.
- Keep back straight
- Avoid twisting at the waist
- Always grip with the palm of the hand
- Keep load as close to the body as possible
- Always use assistance

WARNING
Caution should be exercised when performing any work on this appliance.
Protective gloves and safety glasses are recommended.
- Avoid direct contact with sharp edges.
- Avoid contact with any hot surfaces.

NOTICE
Please be aware that due to the wet testing of the appliance, there may some residual water in the hydraulic circuit.
- Protect any surfaces, carpets or floorings.
- Use a suitable container to catch any water that escape when removing the protective caps from the connections.

All descriptions and illustrations provided in this manual have been carefully prepared but we reserve the right to make changes and improvements in our products that may affect the accuracy of the information contained in this manual.

Code Of Practice

For the installation, commissioning and servicing of domestic heating and hot water products

Benchmark places responsibilities on both manufacturers and installers.* The purpose is to ensure that customers** are provided with the correct equipment for their needs, that it is installed, commissioned and serviced in accordance with the manufacturer's instructions by competent persons and that it meets the requirements of the appropriate Building Regulations. Installers are required to carry out work in accordance with the following:

Standards of Work

- Be competent and qualified to undertake the work required.
- Install, commission, service and use products in accordance with the manufacturer's instructions provided.
- Ensure that where there is responsibility for design work, the installation is correctly sized and fit for purpose.
- Meet the requirements of the appropriate Building Regulations. Where this involves notifiable work be a member of a Competent Persons Scheme or confirm that the customer has notified Local Authority Building Control (LABC), prior to work commencing.
- Complete all relevant sections of the Benchmark Checklist/Service Record when carrying out commissioning or servicing of a product or system.
- Ensure that the product or system is left in a safe condition and, whenever possible, in good working order.
- Highlight to the customer any remedial or improvement work identified during the course of commissioning or servicing work.
- Refer to the manufacturer's helpline where assistance is needed.
- Report product faults and concerns to the manufacturer in a timely manner.

Customer Service

- Show the customer any identity card that is relevant to the work being carried out prior to commencement or on request.
- Give a full and clear explanation/demonstration of the product or system and its operation to the customer.
- Hand over the manufacturer's instructions, including the Benchmark Checklist, to the customer on completion of an installation.
- Obtain the customer's signature, on the Benchmark Checklist, to confirm satisfactory demonstration and receipt of manufacturer's instructions.
- Advise the customer that regular product servicing is needed, in line with manufacturers' recommendations, to ensure that safety and efficiency is maintained.
- Respond promptly to calls from a customer following completion of work, providing advice and assistance by phone and, if necessary, visiting the customer.
- Rectify any installation problems at no cost to the customer during the installer's guarantee period.

benchmark
COLLECTIVE MARK
THE MARK OF QUALITY FOR THE INSTALLATION, COMMISSIONING AND SERVICING OF DOMESTIC HEATING AND HOT WATER SYSTEMS

*The use of the word "installer" is not limited to installation itself and covers those carrying out installation, commissioning and/or servicing of heating and hot water products, or the use of supporting products (such as water treatment or test equipment).
**Customer includes householders, landlords and tenants.

© Heating and Hotwater Industry Council (HHIC)

THE BENCHMARK SCHEME

Sime Ltd is a licensed member of the Benchmark Scheme which aims to improve the standards of installation and commissioning of domestic heating and hot water systems in the UK and to encourage regular servicing to optimise safety, efficiency and performance.

Benchmark is managed and promoted by the Heating and Hotwater Industry Council.

For more information visit www.centralheating.co.uk

Please ensure that the installer has fully completed the Benchmark Checklist in the use and maintenance section of the installation instructions supplied with the product and that you have signed it to say that you have received a full and clear explanation of its operation.

The installer is legally required to complete a commissioning checklist as a means of complyng with the appropriate Building Regulations (England and Wales).

All installations must be notified to Local Area Building Control either directly or through a Competent Persons Scheme.

A Building Regulations Compliance Certificate will then be issued to the customer who should, on receipt, write the Notification Number on the Benchmark Checklist.

This product should be serviced regularly to optimise its safety, efficiency and performance.

The service engineer should complete the relevant Service Record on the Benchmark Checklist after each service.

The Benchmark Checklist may be required in the event of any warranty work and as supporting documentation relating to home improvements in the optional documents section of the Home Information Pack.

PRODUCT DETAILS

sime

Murelle ELITE HE	30 ErP	35 ErP	35 T ErP
Profilo sanitario di carico dichiarato D.H.W load profile declared	XL	XL	
Classe efficienza energetica stagionale riscaldamento C.H. energy efficiency class	A	A	A
Classe efficienza energetica sanitario D.H.W. energy efficiency class	A	A	
Potenza termica (kW) Heat output (kW)	29	34	34
Consumo annuo di energia riscaldamento (kWh) C.H. annual energy consumption (kWh)	152	184	184
Consumo annuo di combustibile sanitario (GJ) D.H.W. annual combustible consumption (GJ)	18	19	
Efficienza energetica stagionale riscaldamento (%) C.H. seasonal energy efficiency (%)	92	91	92
Efficienza energetica sanitario (%) D.HW. energy efficiency (%)	82	80	
Potenza sonora dB(A) Sound power dB(A)	53	54	54

Specifiche precauzioni da adottare al momento del montaggio, dell'installazione o della manutenzione dell'apparecchio sono contenute all'interno del manuale di istruzioni della caldaia
Specific precautionary measures to be adopted at the time of assembly, installation or maintenance of the equipment are contained in the boiler instruction manual

Conforme all'allegato IV (punto 2) del regolamento delegato (UE) N° 811/2013 che integra la Direttiva 2010/30/UE
Conforming to Annex IV (item 2) of the Delegated Regulations (EU) No. 811/2013 which supplements Directive 2010/30/EU

These appliances comply with the S.E.D.B.U.K. scheme, band "A"

CONTENTS

1 DESCRIPTION OF THE BOILER ..... pag. 6
2 INSTALLATION ..... pag. 10
3 CHARACTERISTICS ..... pag. 23
4 USE AND MAINTENANCE, BENCHMARK AND COMMISSIONING ..... pag. 29
5 FAULT FINDING AND FUNCTIONING ERRORS ..... pag. 36
6 REPLACEMENT OF PARTS ..... pag. 37
7 EXPLODED VIEWS ..... pag. 39
8 APPENDIX 1 ..... pag. 52
9 APPENDIX 2 ..... pag. 64

USER INSTRUCTIONS ..... pag. 65

IMPORTANT INFORMATION:
IT IS A STATUTORY REQUIREMENT THAT ALL GAS APPLIANCES ARE INSTALLED BY COMPETENT PERSONS, IN ACCORDANCE WITH THE GAS SAFETY (INSTALLATION AND USE) REGULATIONS (CURRENT EDITION). The manufacturer's instructions must not be taken as overriding any statutory requirements, and failure to comply with these regulations may lead to prosecution.

No modifications to the appliance should be made unless they are fully approved by the manufacturer.

GAS LEAKS: DO NOT OPERATE ANY ELECTRICAL SWITCH, OR USE A NAKED FLAME. TURN OFF THE GAS SUPPLY AND VENTILATE THE AREA BY OPENING DOORS AND WINDOWS CONTACT THE GAS EMERGENCY SERVICE ON 0800111999.

THE BENCHMARK SCHEME
Benchmark places responsibilities on both manufacturers and installers. The purpose is to ensure that customers are provided with the correct equipment for their needs, that it is installed, commissioned and serviced in accordance with the manufacturer's instructions by competent persons and that it meets the requirements of the appropriate Building Regulations. The Benchmark Checklist can be used to demonstrate compliance with Building Regulations and should be provided to the customer for future reference. Installers are required to carry out installation, commissioning and servicing work in accordance with the Benchmark Code of Practice which is available from the Heating and Hotwater Industry Council who manage and promote the Scheme.

benchmark
COLLECTIVE MARK
THE MARK OF QUALITY FOR THE INSTALLATION, COMMISSIONING AND SERVICING OF DOMESTIC HEATING AND HOT WATER SYSTEMS

Please refer to commissioning instructions for filling in the checklist at the back of this installation guide.
Note: All Gas Safe registered installers carry a ID Card.
You can check your installer is Gas Safe Registered by calling 0800 408 5577

SIME COMBINATION BOILERS
Installer checklist

Please remember to carry out the following checks after installation. This will achieve complete customer satisfaction, and avoid unnecessary service calls. A charge will be made for a service visit where the fault is not due to a manufacturing defect.

- Has a correct by-pass been fitted and adjusted?
- Has the system and boiler been flushed?
- Is the system and boiler full of water, and the correct pressure showing on the pressure gauge?
- Is the Auto Air Vent open?
- **Has the pump been rotated manually?**
- Is the gas supply working pressure correct?
- Is the boiler wired correctly? (See installation manual).
- **Has the D.H.W. flow rate been set to the customer requirements?**
- Has the customer been fully advised on the correct use of the boiler, system and controls?
- **Has the Aqua Guard Filter been cleaned (see 4.5.2)?**
- Has the Benchmark Checklist in the use and maintenance section of this manual, been completed ?

1 DESCRIPTION OF THE BOILER

1.1 INTRODUCTION

MURELLE ELITE HE ErP - MURELLE ELITE HE ErP T are premixed gas condensation thermal modules that employ a microprocessor-based technology to control and manage all the functions. All modules are compliant with European Directives 2009/142/CE, 2004/108/CE, 2006/95/CE and 92/42/CE. For optimum installation and operation, always follow the instructions provided in this manual. The products manufactured and sold by Sime do not contain any banned materials or substances (ie they comply with ISO9000:2000).

The **Murelle ELITE HE ErP T** is a system boiler which is designed to be directly connected to a domestic hot water cylinder. When it is not directly connected to a cylinder the two connections, R2 and M2, need to be capped off, the cylinder sensor SB disconnected from the PCB and PAR 2 reset to value 4.

1.2 DIMENSIONS (fig. 1)

MURELLE ELITE HE 30-35 ErP

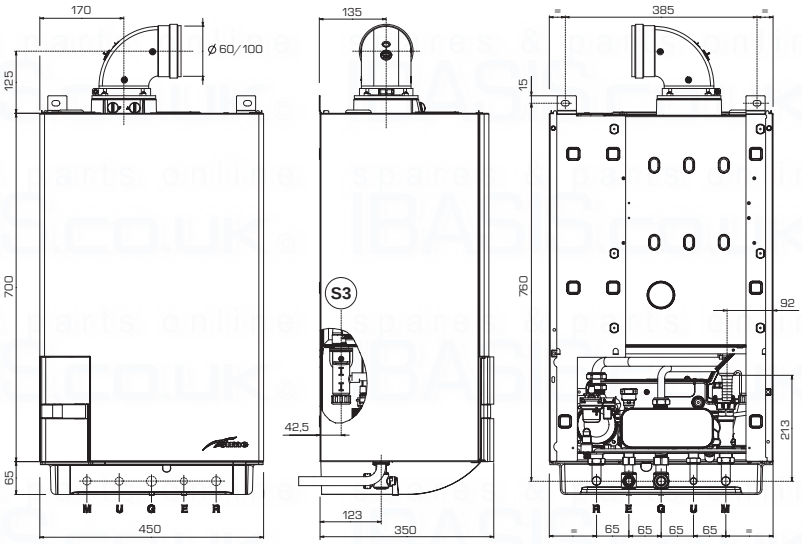

TABLE 1 - Connections

R	C.H. return	22 mm	Compression
M	C.H. flow	22 mm	Compression
G	Gas connection	15 mm	Compression
E	D.H.W. inlet	15 mm	Compression
U	D.H.W. outlet	15 mm	Compression
S3	Condensation outlet ø 25		
M2	D.H.W. tank flow		
R3	D.H.W. tank return		

TABLE 2 - Minimum clearances

	For servicing
Above the appliance casing	200 mm
At the R.H.S.	15 mm
At the L.H.S.	15 mm
Below the appliance casing	200 mm
In front of the appliance	500 mm

MURELLE ELITE HE 35 T ErP

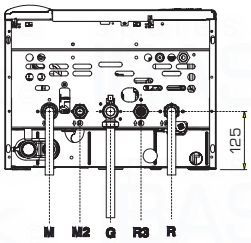

ATTENTION:
The "**35 T**" version is designed for the connection of a remote cylinder, to use it as a boiler **ONLY FOR HEATING** it is necessary:
- to disconnect the D.H.W. sensor (SB)
- set the PAR 2 to 4
- close off the connections R3 and M2

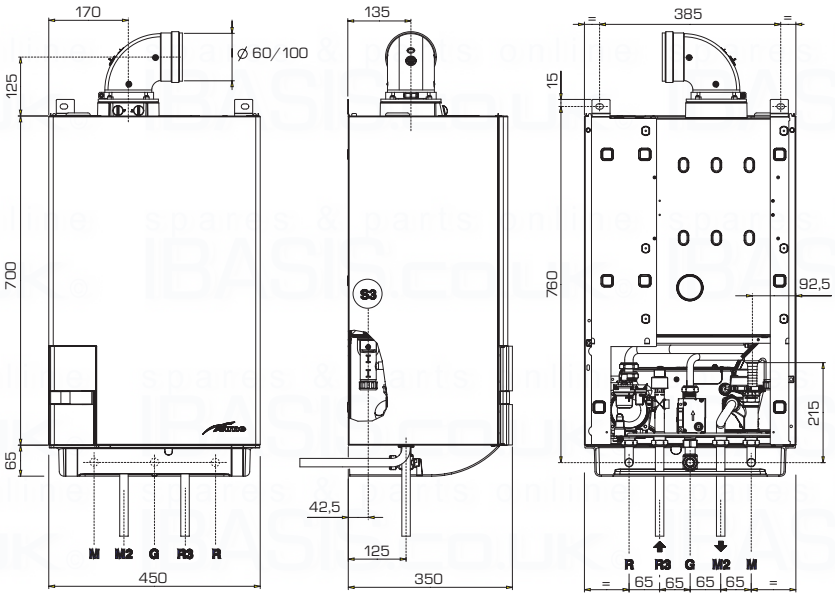

Fig. 1

1.3 TECHNICAL FEATURES

Models MURELLE ELITE HE ErP		30	35	35 T
Heat output				
Nominal (80-60°C) (Pn max)	kW	28.9	34.1	34.1
Nominal (50-30°C) (Pn max)	kW	31.6	37.2	37.2
Reduced G20 (80-60°C) (Pn min)	kW	5.9	7.9	7.9
Reduced G20 (50-30°C) (Pn min)	kW	6.6	8.8	8.8
Reduced G31 (80-60°C) (Pn min)	kW	7.6	8.7	8.7
Reduced G31 (50-30°C) (Pn min)	kW	8.5	9.6	9.6
Heat input (*)				
Nominal (Qn max - Qnw max)	kW	29.5	34.8	34.8
Reduced G20/G31 (Qn min - Qnw min)	kW	6.2/8.0	8.2/9.0	8.2/9.0
Min./max. useful yield (80-60°C)	%	95/98	96/98	96/98
Min./max. useful yield (50-30°C)	%	107/107	107/107	107/107
Useful yield at 30% of the load (40-30°C)	%	107	107	107
Termal efficiency (CEE 92/42 directive)		★★★★	★★★★	★★★★
Losses after shutdown to 50°C (EN 15502)	W	90	95	95
Supply voltage	V-Hz	230-50	230-50	230-50
Adsorbed power consumption (Qn max)	W	83	93	93
Adsorbed power consumption (Qn min)	W	55	56	56
Electrical protection grade	IP	X4D	X4D	X4D
Energy efficiency				
Seasonal energy efficiency class of the heating system		A	A	A
Seasonal energy efficiency of the heating system	%	92	91	92
Sound power of the heating system	dB(A)	53	54	54
D.H.W. energy efficiency class		A	A	--
D.H.W. energy efficiency	%	82	80	--
D.H.W. load profile declared		XL	XL	--
C.H. setting range	°C	20/80	20/80	20/80
Water content boiler	l	5.5	6.0	6.1
Maximum water head (PMS)	bar	2.5	2.5	2.5
Maximum temperature (T max)	°C	85	85	85
Capacity/Pressure expans. vessel	l/bar	10/1	10/1	10/1
D.H.W. setting range	°C	10/65	10/65	--
D.H.W. flow rate (EN 13203)	l/min	13.6	16.1	--
Continuous D.H.W. flow rate (Δt 30°C)	l/min	13.8	16.3	--
Continuous D.H.W. flow rate (Δt 35°C)	l/min	11.8	14.0	--
Minimum D.H.W. flow rate	l/min	2	2	--
D.H.W. pressure min./max. (PMW)	bar	0.2/6.0	0.2/6.0	--
D.H.W. pressure min. nom. power	bar	0.65	0.8	--
Exhaust fumes temperature				
At max flow rate (80-60°C)	°C	70	70	70
At max flow rate (50-30°C)	°C	40	40	40
At min. flow rate (80-60°C)	°C	65	65	65
At min. flow rate (50-30°C)	°C	35	35	35
Smokes flow min./max.	g/s	3.06/13.89	3.89/16.67	3.89/16.67
CO_2 at min./max. flow rate (G20)	%	9.0/9.0	9.0/9.0	9.0/9.0
CO_2 at min./max. flow rate (G31)	%	10.0/10.0	10.0/10.0	10.0/10.0
NOx measured	mg/kWh	19	27	27
CE certification	n°		1312BU5312	
Category			II_{2H3P}	
Type			B23P - B53P - C13 - C33 - C43 - C53 - C83	
NOx emission class			5 (< 70 mg/kWh)	
Weight when empty	kg	45.0	46.6	45.2
Main burner nozzle				
Quantity nozzles	n°	2	2	2
G20 nozzle diameter diversified	ø	2.8/3.8	3.5/4.0	3.5/4.0
G31 nozzle diameter diversified	ø	2.2/2.9	2.8/3.0	2.8/3.0
Consumption gas at max./min. flow rate				
Maximum/Minimum (G20)	m^3/h	3.12 / 0.66	3.68 / 0.87	3.68 / 0.87
Maximum/Minimum (G31)	kg/h	2.29 / 0.62	2.70 /0.70	2.70/0.70
Gas supply pressure (G20/G31)	mbar	20/37	20/37	20/37

(*) Heat input of the heating system measured using lower heating value (LHV)

1.4 FUNCTIONAL DIAGRAM (fig. 2)

MURELLE ELITE HE 30-35 ErP

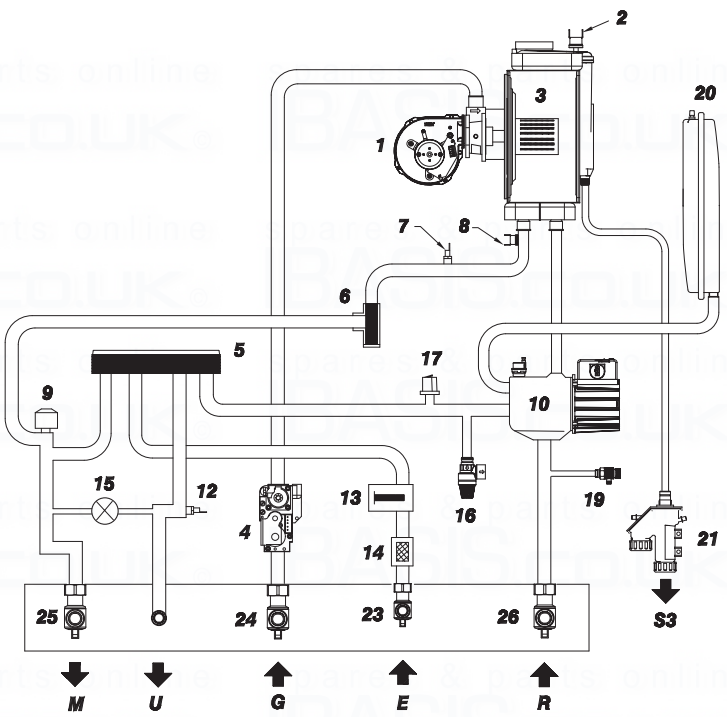

KEY
1 Fan
2 Limit thermostat
3 Primary exchanger
4 Gas valve
5 D.H.W. exchanger
6 Aqua Guard Filter System
7 C.H. sensor (SM)
8 Safety thermostat 100°C
9 Diverter valve
10 Pump high efficiency
12 D.H.W. sensor (SS)
13 D.H.W. flowmeter
14 Hot water inlet filter
15 ------
16 3 BAR safety valve
17 Pressure transducer
19 Drain vent
20 Expansion vessel
21 Condensate trap
23 D.H.W. isolation valve
24 Gas isolation valve
25 C.H. flow isolation valve
26 C.H. return isolation valve

CONNECTIONS
R C.H. return
M C.H. flow
G Gas connection
E D.H.W. inlet
U D.H.W. outlet
S3 Condensation outlet

MURELLE ELITE HE 35 T ErP

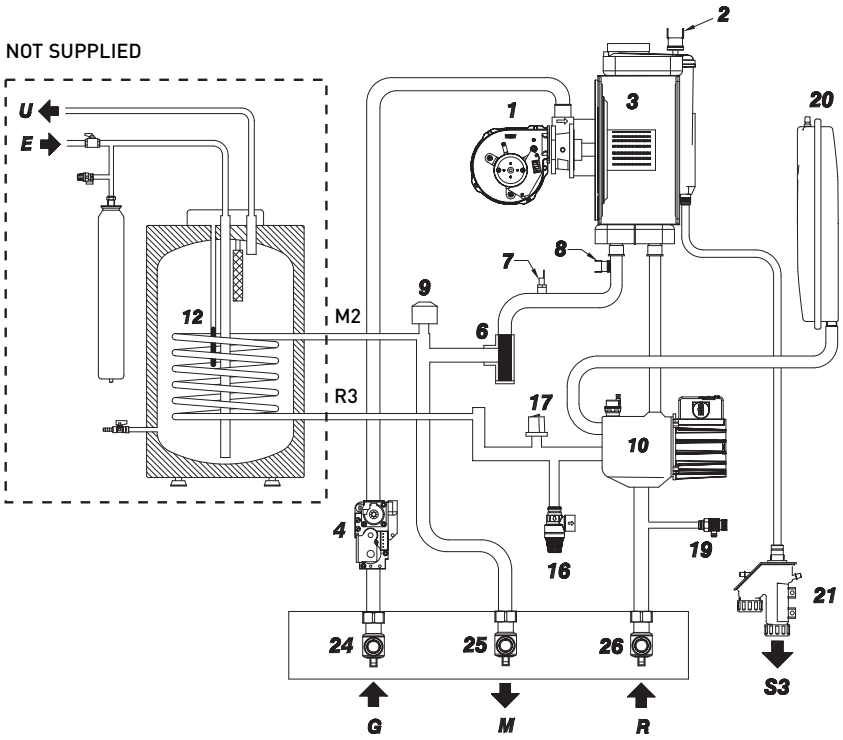

KEY
1 Fan
2 Limit thermostat
3 Primary exchanger
4 Gas valve
6 Aqua Guard Filter System
7 C.H. sensor (SM)
8 Safety thermostat 100°C
9 Diverter valve
10 Pump high efficiency
12 D.H.W. sensor (SB)
16 3 BAR safety valve
17 Pressure transducer
19 Boiler discharge
20 Expansion vessel
21 Condensate drain trap
24 Gas isolation valve
25 C.H. flow isolation valve
26 C.H. return isolation valve

CONNECTIONS
R C.H. return
M C.H. flow
G Gas connection
E D.H.W. inlet
U D.H.W. outlet
S3 Condensation outlet
M2 D.H.W. tank flow
R3 D.H.W. tank return

Fig. 2

1.5 MAIN COMPONENTS (fig. 3)

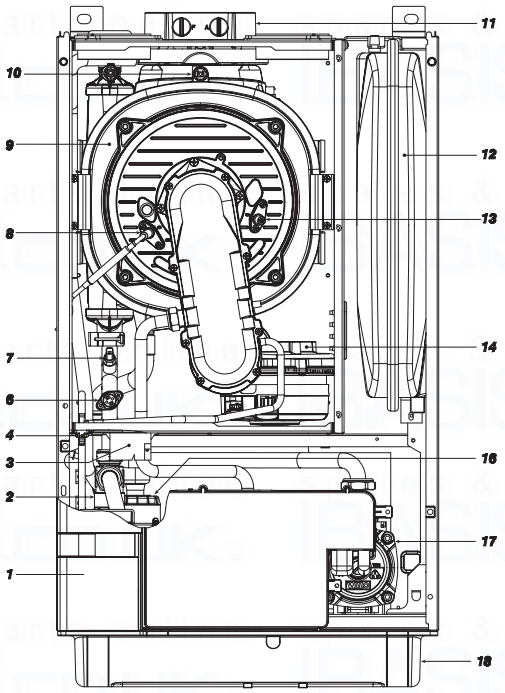

KEY
1 Control panel
2 Aqua Guard Filter System
3 Ignition transformer
4 Air pressure test point
6 Safety thermostat
7 C.H. sensor (SM)
8 Ignition electrode
9 Primary exchanger
10 Exhaust fumes sensor (SF)
11 Flue manifold
12 Expansion vessel
13 Ionisation electrode
14 Fan
16 Diverter valve
17 Pump high efficiency
18 Valve cover (optional)

Fig. 3

1.6 TECHNICAL DATA PLATE (fig. 3/a)

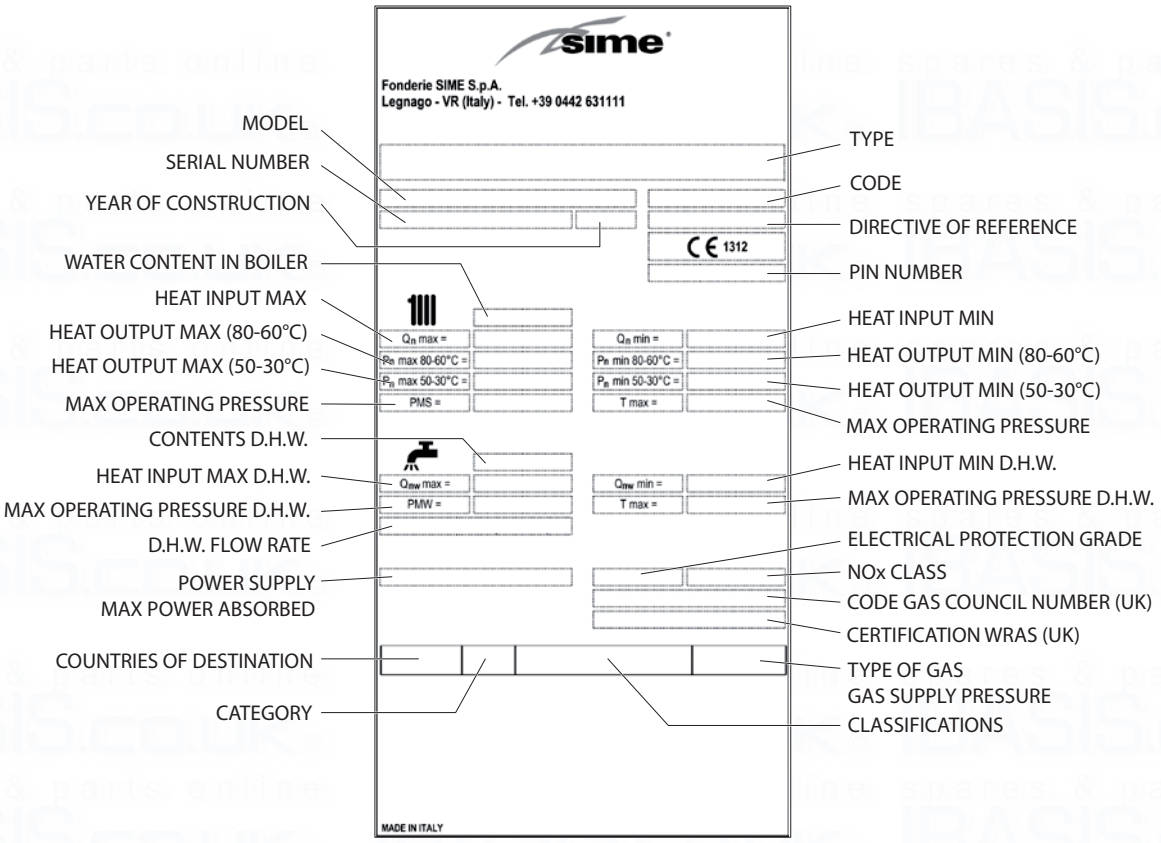

Fig. 3/a

2 INSTALLATION

The boiler must be installed in a fixed location and only by specialized and qualified person in compliance with all instructions contained in this manual. The installation of this boiler must be in accordance with the relevant requirements of the current Gas Safety (installation and use), the local building regulations, and and I.E.E. wiring regulations.

PLEASE NOTE: Before fitting the flue to the boiler, the condensate trap should be filled, see 2.4.1

2.1 VENTILATION REQUIREMENTS

Detailled recommendations for air supply are given in BS5440:2. The following notes are for general guidance: It is not necessary to have a purpose provided air vent in the room or compartment in which the appliance is installed.

2.2 ANTI-FREEZE FUNCTION

The boilers are equipped with anti-freeze function which activates the pump and the burner when the temperature of the water contained inside the appliance drops to below 6°C. The anti-freeze function can only operate if:

- the boiler is correctly connected to the gas and electricity supply circuits;
- the boiler is constantly fed;
- the boiler ignition is not blocked;
- the essential components of the boiler are all in working order

In these conditions the boiler is protected against frost down to an environmental temperature of -5°C.

ATTENTION: In the case of installation in a place where the temperature drops below 0°C, the connection pipes must be protected.

2.3 FIXING THE WALL MOUNTING BRACKET (fig. 4)

- Mark the position of the two wall mounting bracket fixing holes and the flue/air duct hole on the appropriate wall(s).
- Drill a top two fixing holes using a 10 mm masonry drill and fit the plastic plugs provided.
- Accurately measure the wall thickness, and note this dimension for later use.
- Secure the wall mounting bracket in position using the screws provided. Ensure that it is the correct way up, as indicated in fig. 4.

2.4 CONNECTING UP SYSTEM

Before connecting the boiler it is recommended that the system be flushed in accordance to BS 7593, to eliminate any foreign bodies that may be detrimental to the operating efficiency of the appliance. When connecting up the boiler the clearances in fig 1 should be respected. The boiler is supplied with valve pack **5184817B- combi, 8091821- system T**.

A safety valve set at 3 bar is fitted to the appliance, the discharge pipe should be extended to terminate safely away from the appliance and where a discharge would not cause damage to persons or property but would be detected. The pipe should be a minimum of 15 mm ø and should be able to withstand boiling water, and should avoid sharp corners or upward pipe runs where water may be

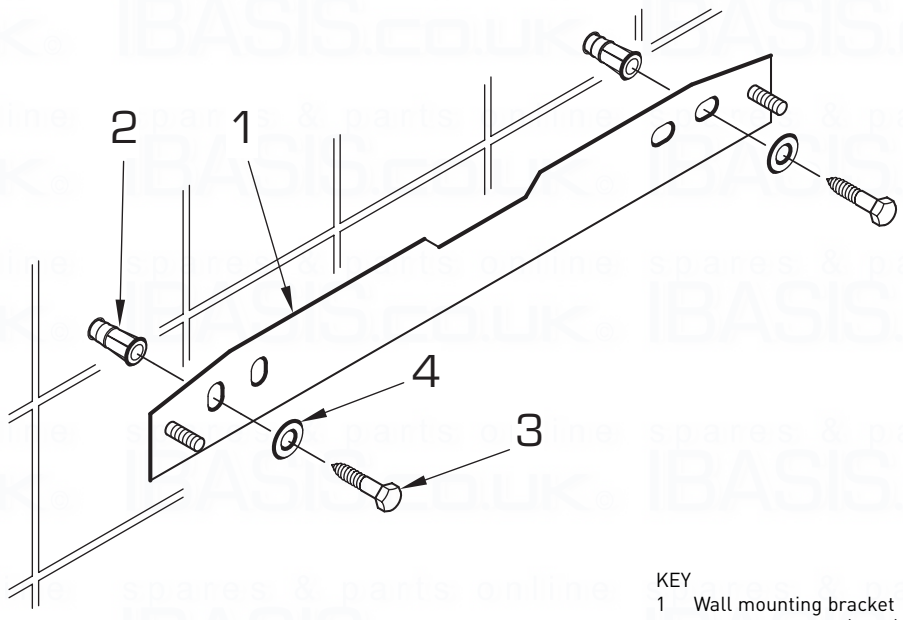

KEY
1 Wall mounting bracket
2 Plastic wall plug (2 Off)
3 Woodscrew (2 Off)
4 Washer (2 Off)

Fig. 4

retained.

Gas Connection

The gas connection must be made using seamless steel or copper. Where the piping has to pass through walls, a suitable insulating sleeve must be provided. When sizing gas piping, from the meter to the boiler, take into account both the volume flow rates (consumption) in m^3/h and the relative density of the gas in question.

The sections of the piping making up the system must be such as to guarantee a supply of gas sufficient to cover the maximum output available from the boiler, limiting pressure loss between the gas meter and any apparatus being used to not greater than 1.0 mbar for family II gases (natural gas).

An adhesive data badge is sited inside the front panel; it contains all the technical data identifying the boiler and the type of gas for which the boiler is arranged.

2.4.1 Connection of condensation water trap

To ensure safe disposal of the condensate produced by the flue gases, reference should be made to BS6798:2009.

The boiler incorporates a condensate trap which has a seal of 75 mm, therefore no additional trap is required. The condensate trap can be filled prior to the installation of the flue by carefully pouring 1 litre of water into the exhaust connection.

NOTE: All pipework must have a continuous fall from the boiler and must be resistant to corrosion by condensate, copper or steel is NOT suitable. It should be noted that the connection of a condensate pipe to a drain may be subject to local building control requirements.

2.4.2 Dealing with condensate

See Appendix 1- industry guidance on dealing with condensate.

the connection to the boiler condensate trap should be made with 20mm waste pipe using the connector provided.

2.4.3 Requirements for sealed water systems MURELLE ELITE HE

The heating system design should be based on the following information:

a) The available pump head is given in fig. 14.
b) The burner starts when circulation is detected by a small pressure fluctuation measured by the pressure transducer.
c) The appliance is equipped with an internal by-pass that operates with system heads (H) greater than 3 m. The maximum flow through the by-pass is about 300 l/h. If thermostatic radiator valves are to be installed, at least one radiator should be without a thermostatic valve (usually the bathroom radiator).
d) A sealed system must only be filled by a competent person using one of the approved methods shown in fig. 5. The system design should incorporate the connections appropriate to one of these methods.

2.5 CHARACTERISTICS OF FEEDWATER

NOTE: If the domestic water supply is metered or should a water meter be added at a later time, a small expansion vessel should be included in the

METHOD OF FILLING A SEALED SYSTEM

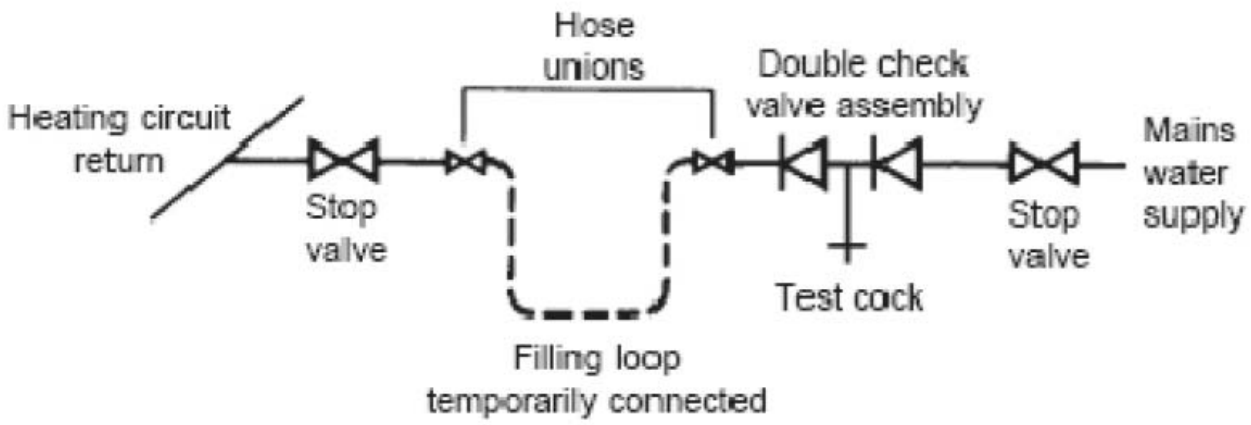

Fig. 5

domestic water pipework.

- All recirculatory systems will be subject to corrosion unless an appropriate water treatment is applied. This means that the efficiency of the system will deteriorate as corrosion sludge accumulates within the system, risking damage to pump and valves, boiler noise and circulation problems.
- Before connecting the boiler the associated central heating system must be flushed in accordance with the guidelines given in BS 7593 "Treatment of water in domestic hot water central heating systems".
- Sime Ltd recommend only the use of FERNOX products for the flushing and final treatment of the system water.. This is particularly important in hard water areas.
  Failure to flush and add inhibitor to the system may invalidate the appliance warranty.

IMPORTANT:

- **The insertion of each additional 90° bend with a diameter of 60/100 (code 8095850) reduces the available section by 1.5 meters.**
- **The insertion of each additional 90° bend with a diameter of 80/125 (code 8095870) reduces the available section by 2 meters.**
- **Each additional 45° curve installed a diameter of 60/100 (code 8095950) reduces the available length by 1.0 metres.**
- **Each additional 45° curve installed a diameter of 80/125 (code 8095970) reduces the available length by 1.0 metres.**

HORIZONTAL FLUES MUST BE LEVEL

NOTE: Before connecting accessories, it is always advisable to lubricate the internal part of the gaskets with silicon products. Avoid using oils and greases.

Model	Length of pipe					
	ø 60/100 (m)			ø 80/125 (m)		
	H	V		H	V	
		Min.	Max.		Min.	Max.
30	5	1.3	7	10	1.2	13
35	4	1.3	6	8	1.2	11
35 T	4	1.3	6	8	1.2	11

LIST OF ø 60/100 ACCESSORIES

1a Coaxial duct kit L. 790 code 8096250
1b Special coaxial duct kit L. 695 code 8098604/05
2a Extension L. 1000 code 8096150
2b Extension L. 500 code 8096151
3 Vertical extension L. 140 with coupling code 8086950
5 Tile for joint code 8091300
6 Terminal for roof exit L. 1285 code 8091212 (includes 8086950)

LIST OF ø 80/125 ACCESSORIES

1 Coaxial duct kit L. 785 code 8096253
2a Extension L. 1000 code 8096171
2b Extension L. 500 code 8096170
3 Adapter for ø 80/125 code 8093150
5 Tile for joint code 8091300
6 Terminal for roof exit L. 1285 code 8091212A (includes 8093150)

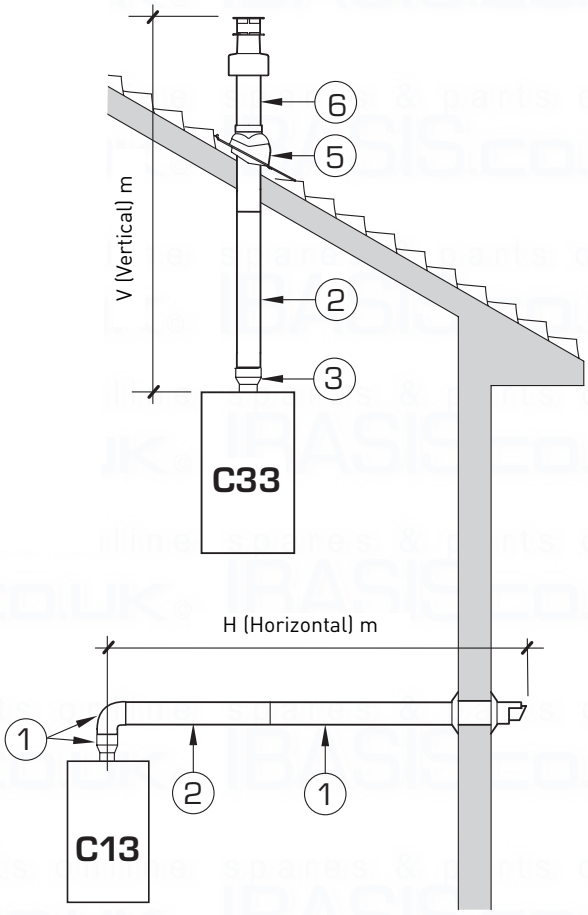

Fig. 6

Artificially softened water must not be used to fill the heating system.

- It is important to check the inhibitor concentration after installation, system modification and at every service in accordance with the manufacturer's instructions. (Test kits are available from inhibitor stockists).
- At every service the Aquaguard Filter (4.5.2) should be checked and cleaned.

Flues must be installed in accordance with BS 5440-1

2.6 INSTALLATION OF COAXIAL DUCT ø 60/100 - ø 80/125 (fig. 6)

See 2.4.1 Filling the trap, before fitting the flue. The coaxial suction and discharge pipes are supplied in a special kit (that can be purchased separately) along with assembly instructions.
The diagrams of fig. 6 illustrate some examples of different types of flue options allowed and the maximum lengths that can be reached. It is essential that a flue gas analysis test point is made available directly above the boiler.

2.7 INSTALLATION OF SEPARATE DUCTS ø 80 (fig. 7)

See 2.4.1 Filling the trap, before fitting the flue. The kit with dedicated pipes enables to separate the exhaust fumes pipes from the air intake pipes (fig. 7).
It is essential that a flue gas analysis test point is made available directly above the boiler.

- The kit with dedicated ø 80 pipes, code 8089912, includes a SUCTION DIAPHRAGM THAT IS NOT used for these models. To be able to use the air inlet connection, cut its base with a tool (A) and assemble it (B).

The maximum overall length, resulting from the sum of all the intake and discharge pipes, is determined by the load losses of the single connected accessories and should not exceed 15 mm H_2O (version HE 30-35-35T) (ATTENTION: the total length of each pipe should not exceed 50 m, even if the total loss is below the maximum applicable loss.)

See **Table 1** for information on the load losses of single accessories.

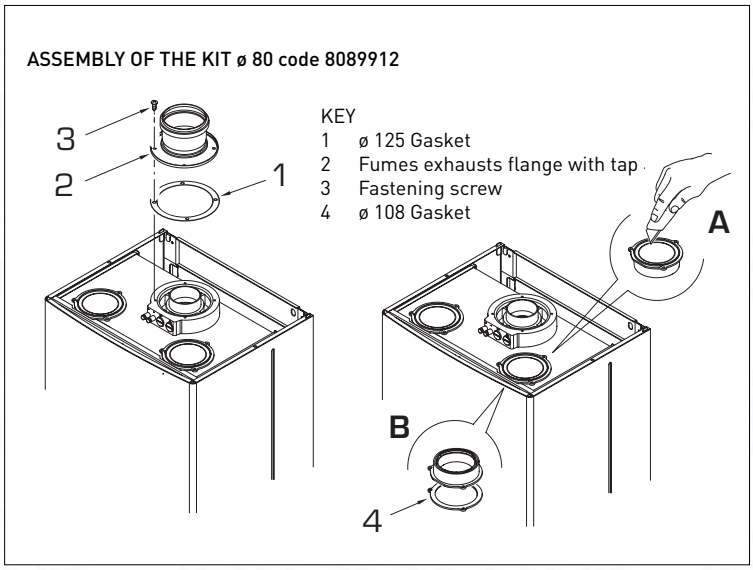

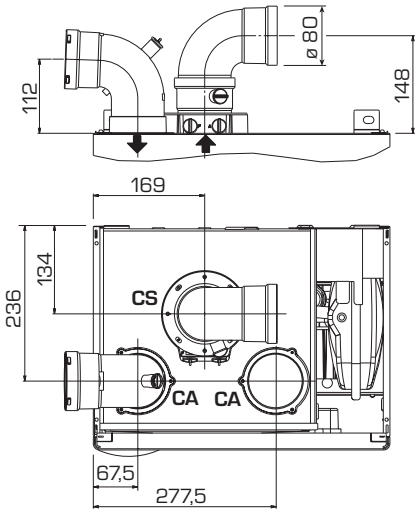

KEY
CA Inlet
CS Outlet

Fig. 7

TABLE 1 - ACCESSORIES ø 80

Accessories ø 80	Total head loss (mm H_2O)			
	30		35	
	Inlet	Outlet	Inlet	Outlet
Coaxial duct kit	–	–	–	–
90° elbow MF	0.25	0.30	0.30	0.40
45° elbow MF	0.20	0.20	0.25	0.25
Extension L. 1000 (horizontal)	0.20	0.20	0.25	0.25
Extension L. 1000 (vertical)	0.20	0.20	0,25	0.25
Wall terminal	0.10	0.35	0.15	0.50
Wall coaxial exhaust *				
Roof outlet terminal *	1.10	0.15	1.50	0.20

*** This loss includes the losses of the adaptor 8091401**

2.7.1 Separate ducts kit (fig. 9)

The diagrams of fig. 9 show examples of the permitted flue configurations.

2.8 POSITIONING THE OUTLET TERMINALS (fig. 10)

The outlet terminals for forced-draught appliances may be located in the external perimeter walls of the building.

To provide some indications of possible solutions, **Table 2** gives the minimum distances to be observed, with reference to the type of building shown in fig. 10.

2.9 ELECTRICAL CONNECTION

The boiler is supplied with an electric cable. Should this require replacement, it must be replaced with one of similar type and dimensions. The electric power supply to the boiler must be 230V - 50Hz single-phase through a 3A fused main switch, with at least 3 mm spacing between contacts. Respect the L and N polarities and the earth connection.

NOTE: SIME declines all responsibility for injury or damage to persons, animals or property, resulting from the failure to provide for proper earthing of the appliance.

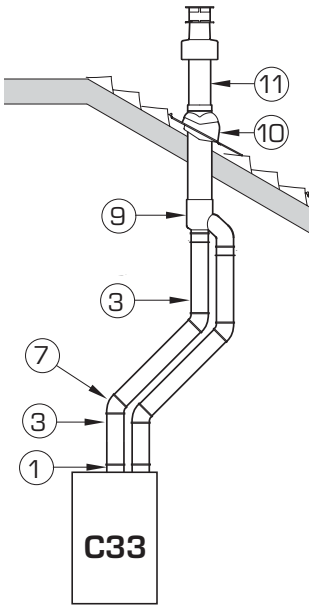

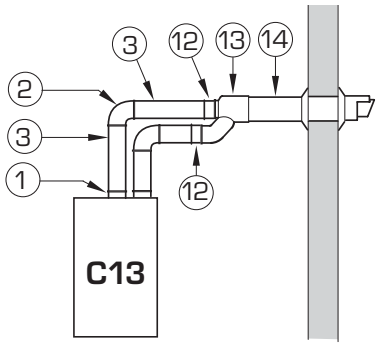

NOTE
Before connecting accessories, it is always advisable to lubricate the internal part of the gaskets with silicon products. Avoid using oils and greases.

LIST OF ø 80 ACCESSORIES

1 Coaxial duct kit code 8089912
3 a Extension L. 1000 code 8077351
3 b Extension L. 500 code 8077350
7 a Additional 45° MF curve code 8077451
7 b Additional 90° MF curve code 8077450
9 Manifold, code 8091401
10 Tile for joint code 8091300
11 Terminal for roof exit L. 1381 code 8091212B
12 --------
13 Union suction/exhaust code 8091401
14 Coaxial exhaust ø 80/125 L. 885 code 8096253A

Fig. 9

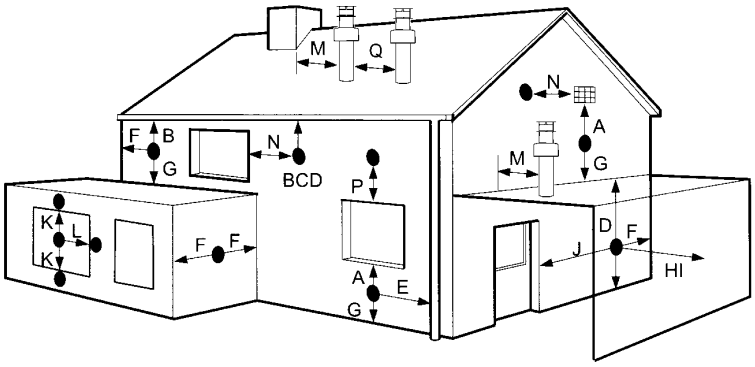

TABLE 2

Terminal position		Minimum spacing	
A	Directly below an openable window, air vent or any other ventilation opening	300 mm	12 in
B	Below guttering, drain pipes or soil pipes (*)	75 mm	3 in
C/D	Below eaves, balconies or carport roof (**)	200 mm	8 in
E	From vertical drain pipes or soil pipes	75 mm	3 in
F	From internal or external corners	300 mm	12 in
G	Above adjacent ground, roof or balcony level	300 mm	12 in
H	From a boundary or surface facing the boiler	600 mm	24 in
I	From a terminal facing the terminal	1,200 mm	48 in
J	From an opening in the carport (eg door, window into dwelling)	1,200 mm	48 in
K	Vertically from a terminal on the same wall	1,500 mm	60 in
L	Horizont. from a terminal on the same wall	300 mm	12 in
M	Horizont. from a vertical terminal to a wall	300 mm	12 in
N	Horizont. from an openable window or other opening	300 mm	12 in
P	Above an openable window or other opening	300 mm	12 in
Q	From an adjacent vertical terminal	600 mm	24 in

(*) For condensing boilers this distance can be reduced to 25 mm without effecting boiler performance, but it will be necessary to protect the surfaces from the effects of condensate

(**) This dimension to be used with ventilated soffits. With unvented soffits this can be reduced to 75mm and further reduced to 25mm when a flue shield is used to protect from the effects of heat and condensation.

- If the terminal discharges into a pathway or passageway check that combustion products will not cause nuisance and that the terminal will not obstruct the passageway.
- Where the lowest part of the terminal is fitted less than 2 m (78 in) above ground, above a balcony or above a flat roof to which people have access, the terminal MUST be protected by a purpose designed guard.
- Where the terminal is fitted within 850 mm (34 in) of a plastic or painted gutter, or 450 mm (18 in) of painted eaves, an aluminium shield at least 1,500 mm (59 in) long must be fitted to the underside of the painted surface.
- The air inlet/outlet flue duct MUST NOT be closer than 10 mm (0.4 in) to combustible material.
- In certain weather conditions the terminal may emit a plume of steam. This is normal but positions where this would cause a nuisance should be avoided.

For guidance only, flues should be installed in accordance with BS5440

Fig. 10

2.9.1 External Controls

The heat demand can be by a "clean contact" (conforming to EN607301), room stat or programmer connected to the "TA" connection (**figs. 11 – 11/a**), CN6 terminals 7 & 8 after removing the link. A 230v switched demand to terminal 14 CN7 and removal of the "TA" link on terminals 7 & 8 on CN6.
MURELLE ELITE HE 35 T ErP version the D.H.W. demand can be by either a thermistor or thermostat depending on configuration, see section 2.9.5 and 3.3.

A permanent power supply must be maintained.

2.9.2 Remote control SIME HOME connection (optional)

The boiler is designed for connection to a remote control unit, supplied on request (SIME HOME code 8092280/81).
The remote control unit SIME HOME allows for complete remote control of the boiler.
The boiler display will show the following message:

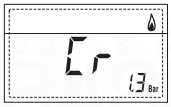

For installation and use of the remote control, follow the instructions in the package.

NOTE: Ensure PAR 10 set to 1 (PAR 10 = 1).

2.9.3 External sensor connection

The boiler is designed for connection to an external temperature sensor, supplied on request (code 8094101) in conjunction with remote control (code 8092226), which can automatically regulate the temperature value of the boiler output according to the external temperature.
For installation, follow the instruction in the package.
It is possible to make corrections to the values by adjustment of **PAR 11**.
The flow temperature will be regulated with respect to the external temperature, for this reason external sensors should only be used with system boilers used only for heating(no DHW) and System T boilers using all four pipe connections.

2.9.5 D.H.W. sensor connection in vers. "35 T"

The **"MURELLE ELITE HE 35 T ErP"** version is provided with a D.H.W. sensor (SB) linked to the connector CN5.
When the boiler is coupled to an external cylinder, the sensor (SB) must be fitted into a sleeve in the cylinder and PAR 2 set to 3.
If the cylinder temperature is to be controlled by a thermostat then PAR 2 is set to 4.

Operations must be carried out by authorized and qualified technicians.

2.9.6 Use with different electronic systems

Some examples are given below of boiler systems combined with different electronic systems. Where necessary, the parameters to be set in the boiler are given. The electrical connections to the boiler refer to the wording on the diagrams (figs. 11 -11/a). The zone valve control starts at every demand for heating of the zone 1 (it is from part of the TA1 or the CR).
Description of the letters indicating the components shown on the system diagrams 1 to 14:

M	C.H. flow
R	C.H. return
CR	Remote control SIME HOME (code 80922280/81)
SE	External temperature sensor
TA 1-2-3-4	Zone room thermostat
CT 1-2	Zone room thermostat internal time clock
VZ 1-2	Zone valve
RL 1-2-3-4	Zone relay
Sl	Hydraulic separator
P 1-2-3-4	Zone pump
IP	Floor system
EXP	Expansion card Mixed Zone (code 8092233) / SOLAR (code 8092235)
VM	Three-way mixer valve

1 BASIC SYSTEM: SYSTEM WITH A DIRECT ZONE AND ROOM THERMOSTAT, OR WITH REMOTE CONTROL SIME HOME (Code 8092280/81) AND EXTERNAL SENSOR (Code 8094101)

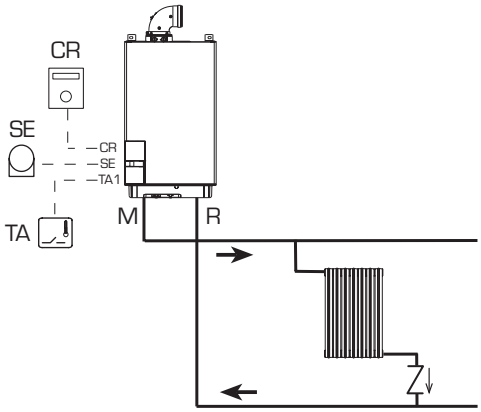

2 BASIC SYSTEM: MULTI-ZONE SYSTEM WITH PUMP, ROOM THERMOSTAT AND EXTERNAL SENSOR (Code 8094101)

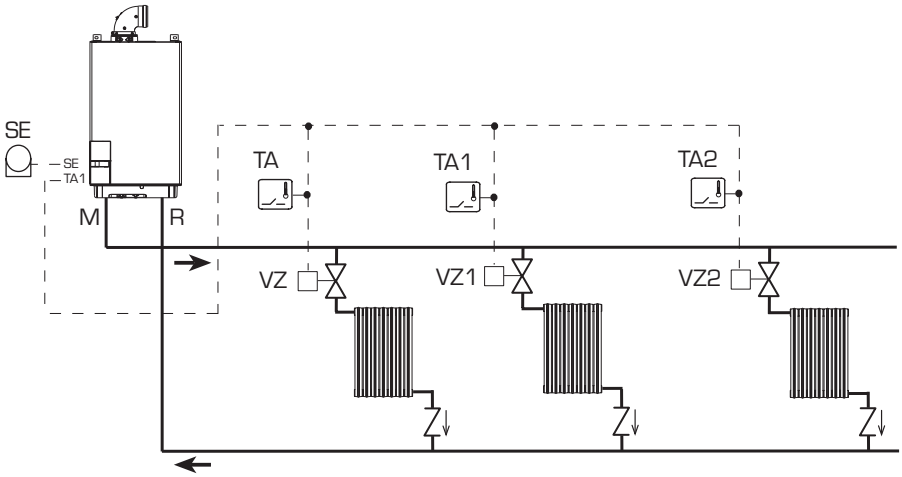

3 BASIC SYSTEM: MULTI-ZONE SYSTEM WITH PUMP, ROOM THERMOSTAT AND EXTERNAL SENSOR (Code 8094101)

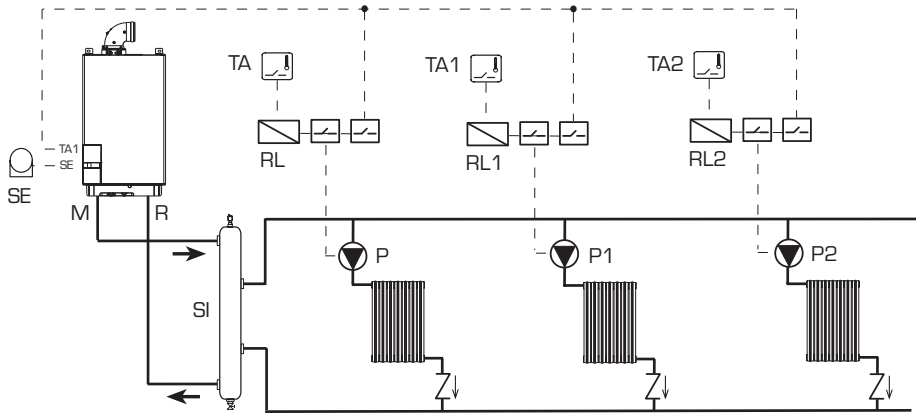

4 BASIC SYSTEM: MULTI-ZONE SYSTEM WITH VALVE, ROOM THERMOSTAT, REMOTE CONTROL SIME HOME (Code 8092280/81) AND EXTERNAL SENSOR (Code 8094101)

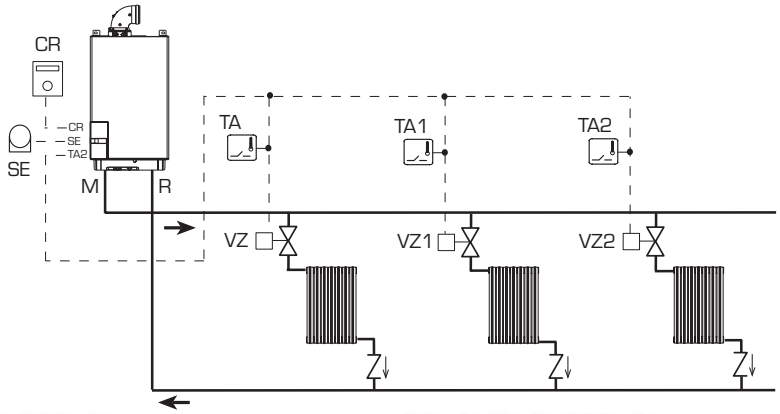

PARAMETERS SETTINGS

To use the remote control SIME HOME (CR) as remote control panel for the boiler rather than as room reference, set:
PAR 7 = 0

5 BASIC SYSTEM: MULTI-ZONE SYSTEM WITH VALVE, ROOM THERMOSTAT, REMOTE CONTROL SIME HOME (Code 8092280/81) AND EXTERNAL SENSOR (Code 8094101)

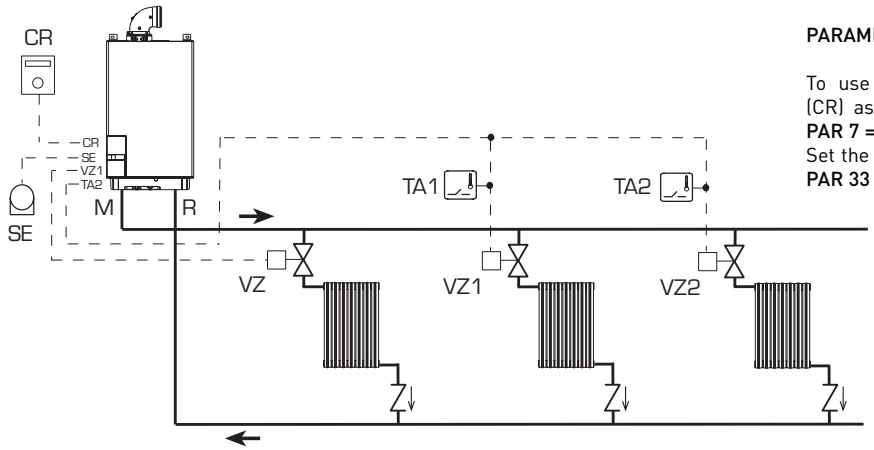

PARAMETER SETTING

To use the remote control SIME HOME (CR) as room reference for a zone, set:
PAR 7 = 1
Set the opening time of the zone valve VZ:
PAR 33 = "OPENING TIME"

6 BASIC SYSTEM: MULTI-ZONE SYSTEM WITH PUMP, ROOM THERMOSTAT, REMOTE CONTROL SIME HOME (Code 8092280/81) AND EXTERNAL SENSOR (Code 8094101)

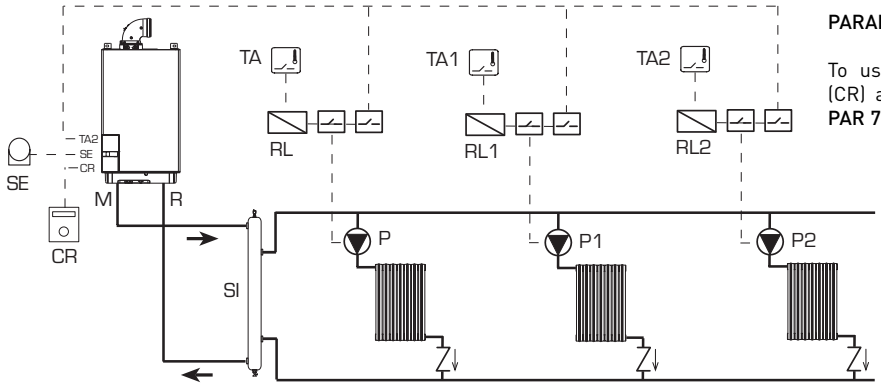

PARAMETER SETTING

To use the remote control SIME HOME (CR) as room reference for a zone, set: **PAR 7 = 1**

7 SYSTEM WITH DOUBLE TEMPERATURE OUTPUT: MULTI-ZONE SYSTEM WITH VALVE, ROOM THERMOSTAT INTERNAL TIME CLOCK AND EXTERNAL SENSOR (Code 8094101)

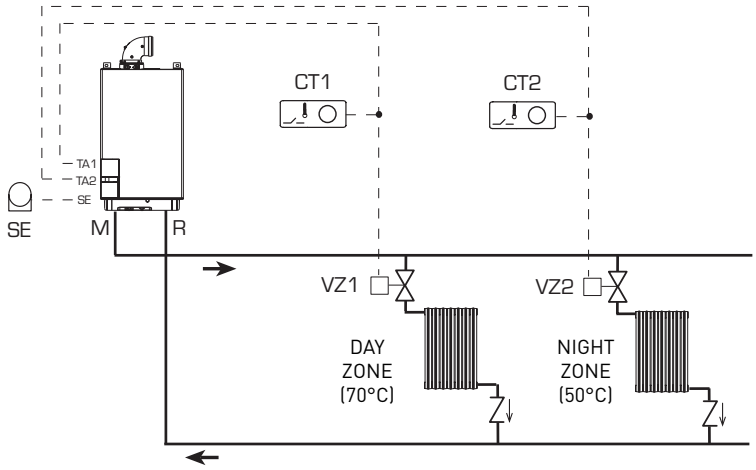

DURING NIGHT TIME THE BOILER USES A LOWER OUTPUT TEMPERATURE IF DIFFERENT TIMES HAVE BEEN SET FOR DAY AND NIGHT AREAS:

- **with external sensor,** set the climatic curve of the day zone 1 with PAR 25 and the night zone at PAR 26.
- **without external sensor,** gain access to setting the day zone 1 by pressing the key and change the value with the keys and . Gain access to setting the night zone by pressing the key twice and changing the value with the keys and .

8 SYSTEM WITH DOUBLE TEMPERATURE OUTPUT: MULTI-ZONE SYSTEM WITH PUMP, ROOM THERMOSTAT INTERNAL TIME CLOCK AND EXTERNAL SENSOR (Code 8094101)

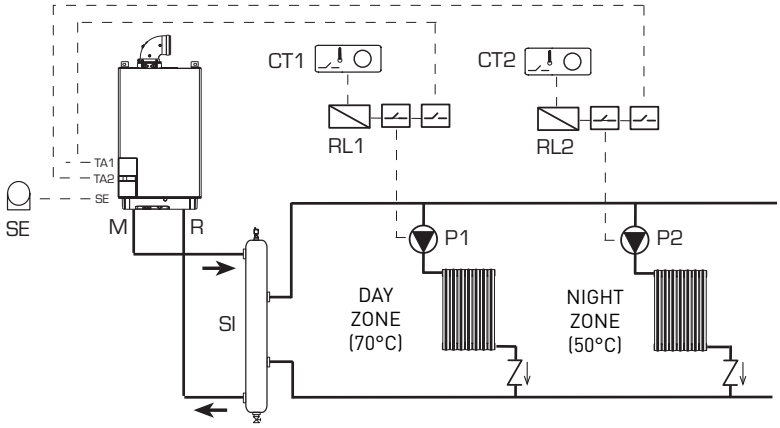

9 SYSTEM WITH REMOTE CYLINDER

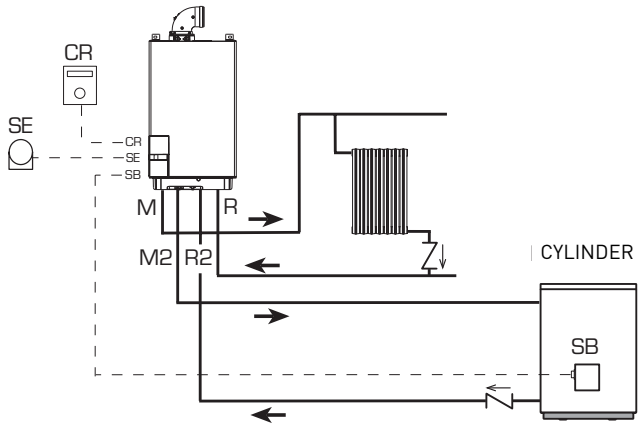

PARAMETER SETTING

MURELLE ELITE HE 35 T ErP if with D.H.W cylinderto be set: **PAR 2 = 3**

MURELLE ELITE HE 35 T ErP only for heating to be set:
PAR 2 = 4

An alternative to the CR would be to connect a room thermostat to the TA 1 connection

10 SYSTEM WITH REMOTE BOILING UNIT AFTER THE HYDRAULIC SEPARATOR

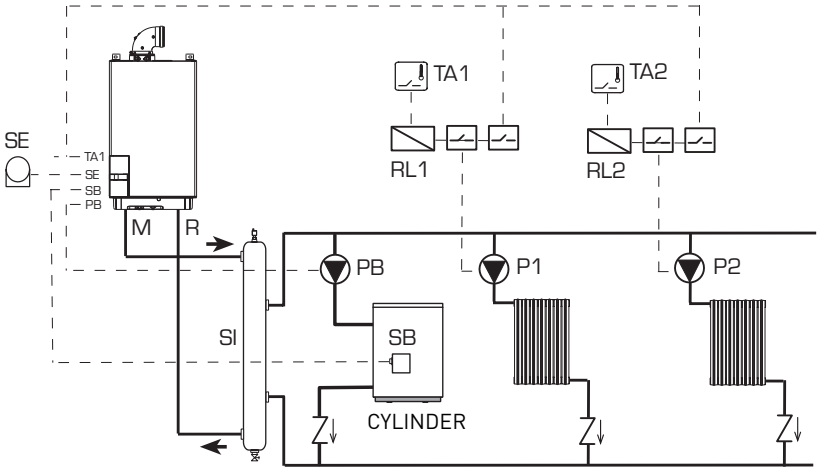

11 SYSTEM WITH MIXER VALVE: SYSTEM WITH ONE DIRECT ZONE AND ONE MIXED ZONE

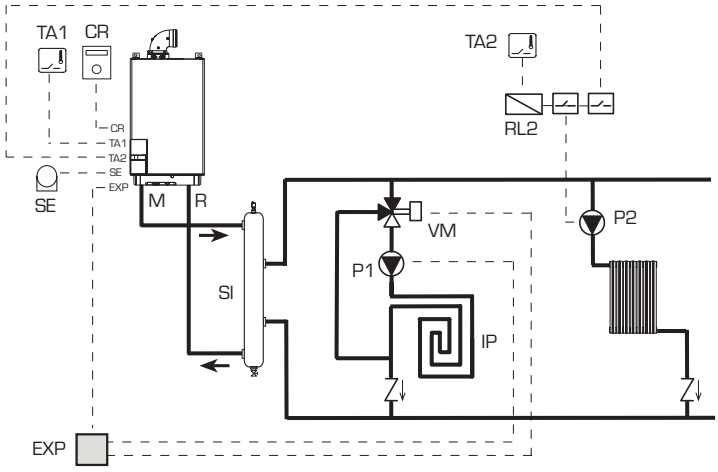

PARAMETERS SETTINGS

To use the remote control SIME HOME (CR) as remote control panel for the boiler rather than as room reference, set:
PAR 7 = 0

12 SYSTEM WITH MIXER VALVE: SYSTEM WITH TWO DIRECT ZONES AND TWO MIXED ZONES

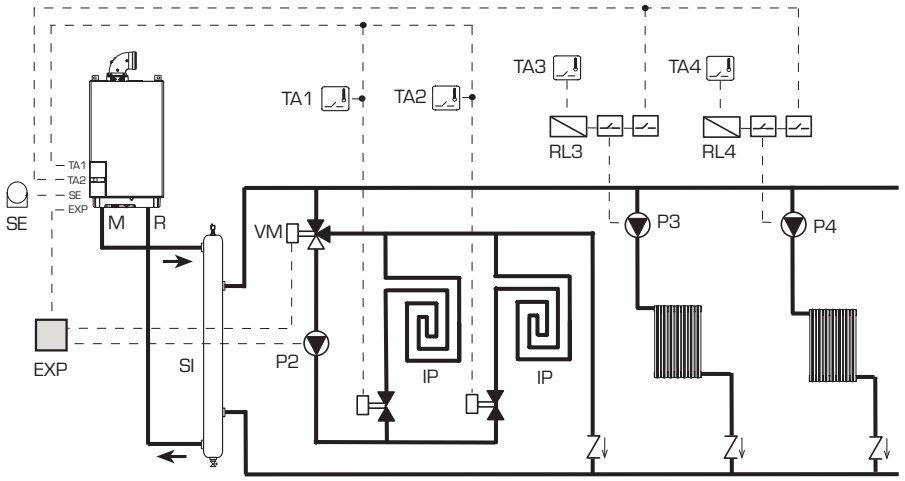

13 SYSTEM WITH MIXER VALVE: SYSTEM WITH TWO MIXED ZONES INDEPENDENT AND TWO KITS MIXED ZONE (CODE 8092234)

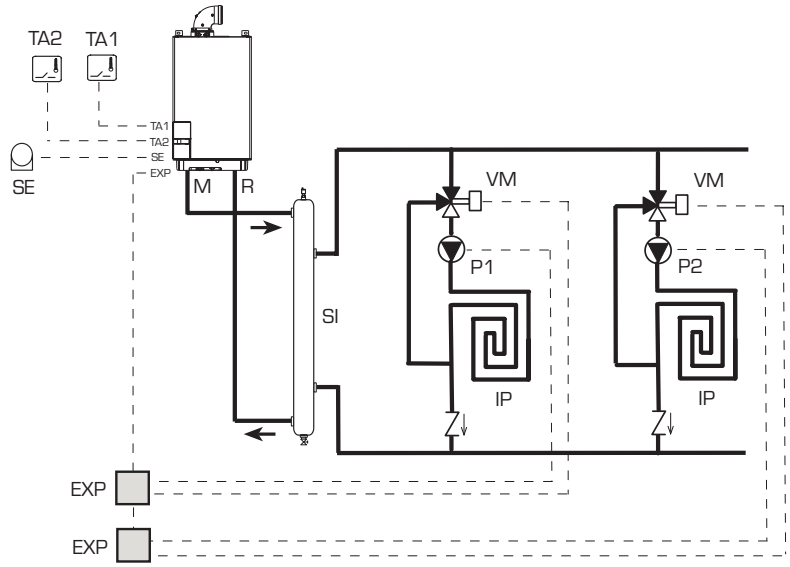

14 SYSTEM SOLAR: SYSTEM WITH KIT SOLAR (Code 8092235)

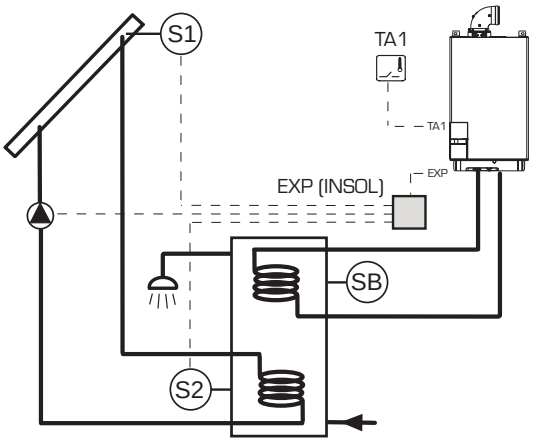

vers. "MURELLE ELITE HE 35 T ErP"

PARAMETER SETTING

PAR 44 = 1
PAR 2 = 3

2.10 BOILER ELECTRICAL "MURELLE ELITE HE 30-35 ErP" (fig. 11)

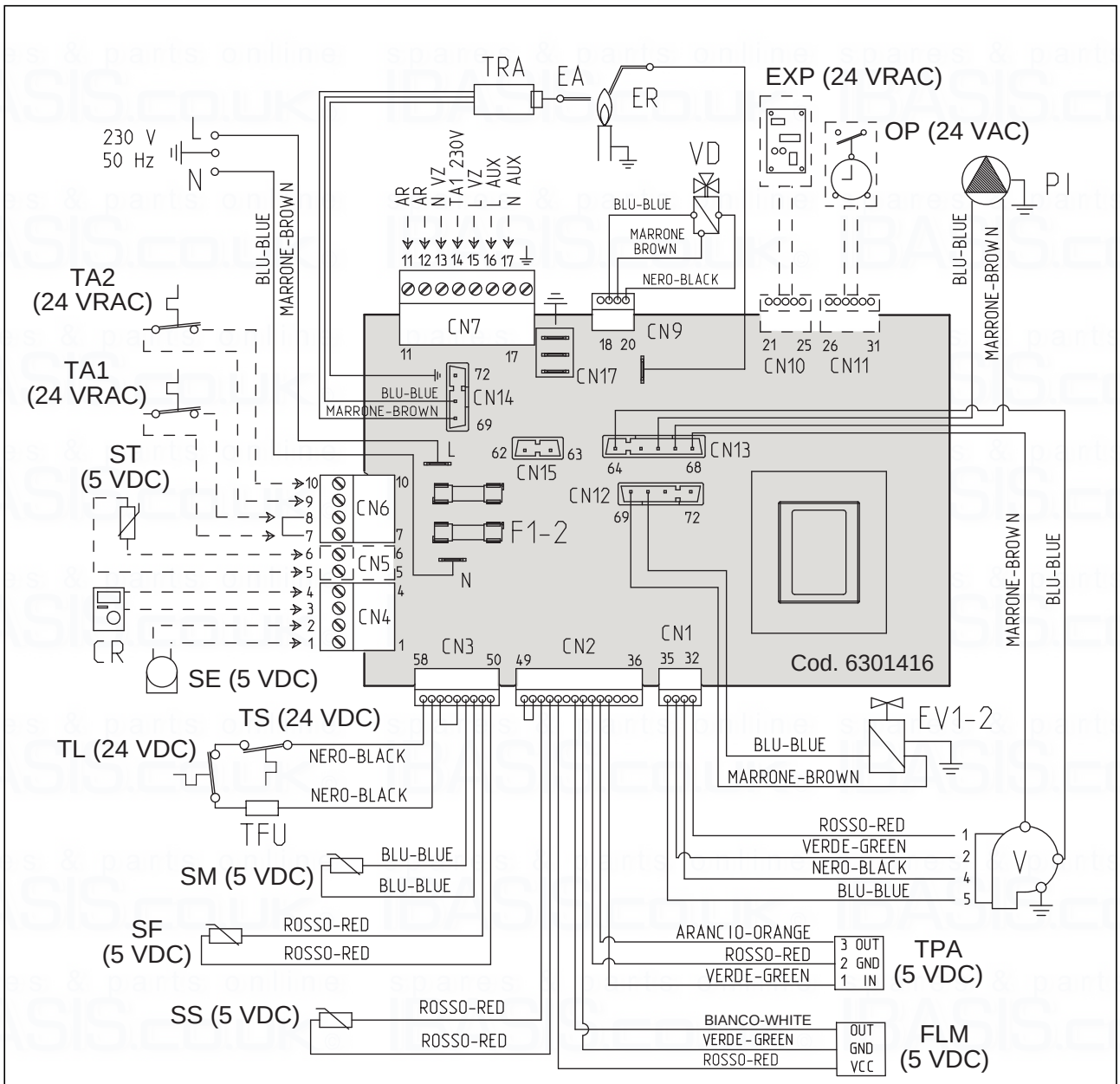

KEY	
F1-2	Fuse (4 AT)
TRA	Ignition transformer
PI	Pump high efficiency
V	Fan
EA	Ignition electrode
ER	Ionisation electrode
EV1-2	Gas valve coil
TS	Safety thermostat
SF	Exhaust fumes sensor
TFU	Thermal fuse
VD	Diverter valve
SM	Heating sensor
TL	Limit thermostat
SS	D.H.W. sensor
FLM	D.H.W. flowmeter
TA1	Zone 1 environment thermostat
TA2	Zone 2 environment thermostat
ST	Solar heat sensor
CR	Remote control SIME HOME (optional)
SE	External sensor (optional)
OP	Internal time clock (optional)
EXP	Expansion card
AR	Remote alarm
VZ	Zone valve
AUX	Auxiliary connection

NOTE:
The heat demand can be by a volt free contact connected to CN6 terminals 7 & 8 after removal of the link, or by 240v to terminal 14 CN7 and removal of the link on CN6 terminals 7 & 8.
A permanent mains supply must be maintained at all times.

CONNECTOR SPARE PART CODES:

CN1/CN13	code 6319146
CN2	code 6323885
CN3	code 6319145
CN4	code 6316203
CN6	code 6316202
CN7	code 6316204
CN9	code 6316295
CN12	code 6316280
CN14	code 6316213

Fig. 11

2.11 BOILER ELECTRICAL "MURELLE ELITE HE 35 T ErP" (fig. 11/a)

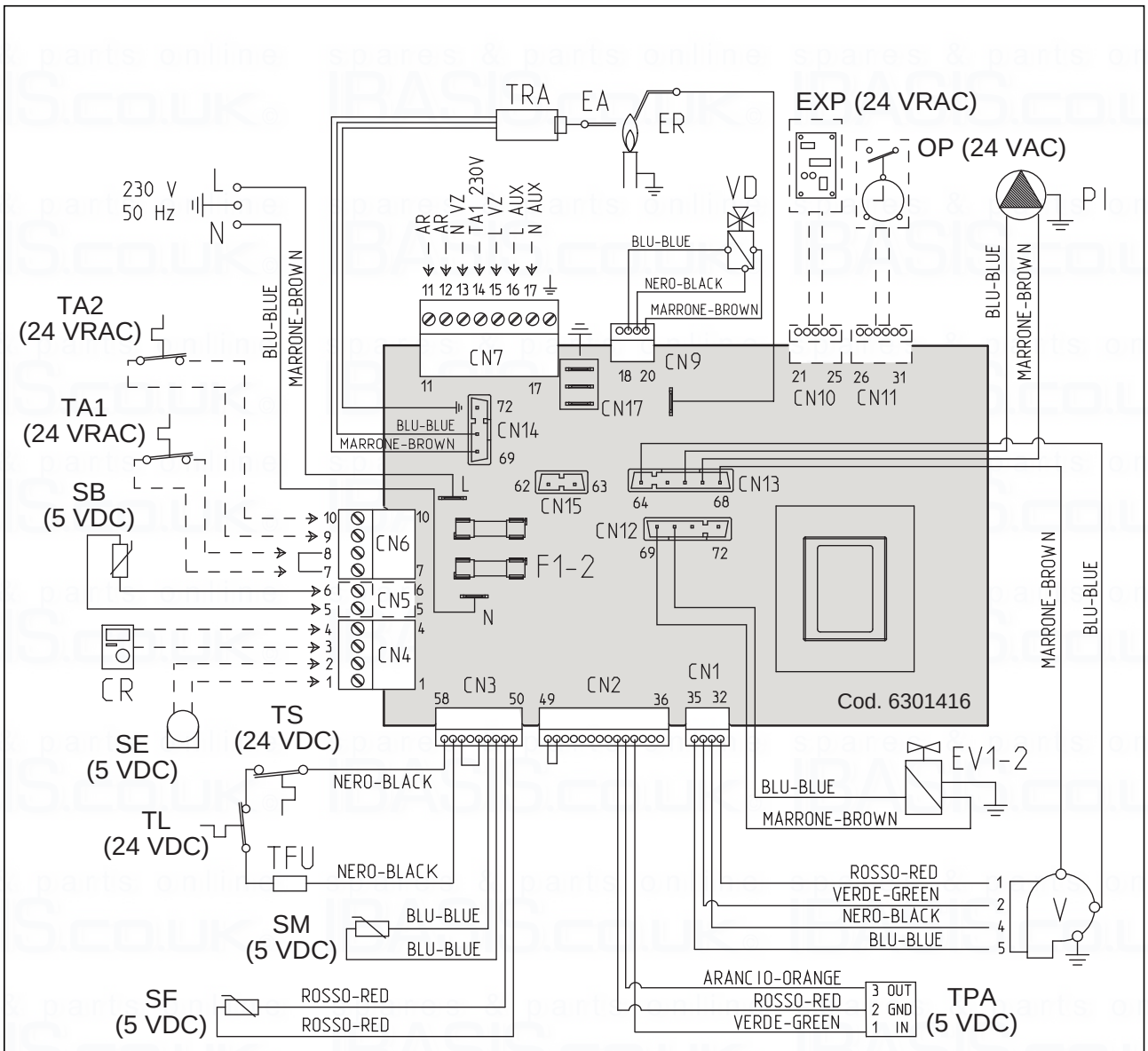

KEY

F1-2	Fuse (4 AT)
TRA	Ignition transformer
PI	Pump high efficiency
V	Fan
EA	Ignition electrode
ER	Ionisation electrode
EV1-2	Gas valve coil
TS	Safety thermostat
SF	Exhaust fumes sensor
TFU	Thermal fuse
VD	Diverter valve
SM	Heating sensor
TL	Limit thermostat
VD	Diverter valve
TPA	Pressure transducer
TA1	Zone 1 environment thermostat
TA2	Zone 2 environment thermostat
SB	D.H.W. tank sensor
CR	Remote control SIME HOME (optional)
SE	External sensor (optional)
OP	Internal time clock (optional)
EXP	Expansion card
AR	Remote alarm
VZ	Zone valve
AUX	Auxiliary connection

NOTE:
The heat demand can be by a volt free contact connected to CN6 terminals 7 & 8 after removal of the link, or by 240v to terminal 14 CN7 and removal of the link on CN6 terminals 7 & 8.
A permanent mains supply must be maintained at all times.

CONNECTOR SPARE PART CODES:

CN1/CN13	code 6319146
CN2	code 6323816
CN3	code 6319145
CN4	code 6316203
CN5	code 6316200
CN6	code 6316202
CN7	code 6316204
CN9	code 6316295
CN12	code 6316280
CN14	code 6316213

Fig. 11/a

3 CHARACTERISTICS

3.1 CONTROL PANEL (fig. 12)

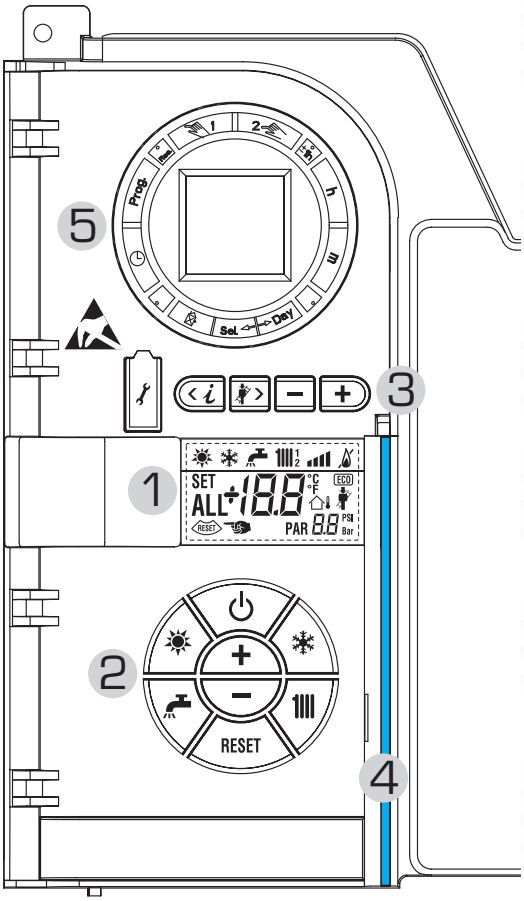

1 - DESCRIPTION OF DISPLAY ICONS

SUMMER MODE ICON

WINTER MODE ICON

D.H.W. MODE ICON

HEATING MODE ICON
1 = First circuit heating system
2 = Second circuit heating system (if fitted)

GRADED POWER SCALE: The segments of the bar light up in proportion to boiler power output .

BURNER FUNCTIONING AND BLOCK ICON

DESCRIPTION OF DISPLAY ICONS

CHIMNEY SWEEP ICON

SECONDARY DIGITS: The boiler visualises the value of the pressure of the system (correct value is between 1 and 1.5 bar)

MAIN DIGITS: The boiler visualises the values set, the state of anomaly and the external temperature

INTEGRATIVE SOURCES ICON

2 - DESCRIPTION OF CONTROLS

ON/OFF KEYS
ON = Electricity supply to boiler is on
OFF = Electricity supply to boiler is on but nor ready for functioning. However, the protection functions are active.

SUMMER MODE KEY
When this key is pressed, the boiler functions only when D.H.W. is requested.

WINTER MODE KEY
When this key is pressed, the boiler provides heating and D.H.W.

D.H.W. TEMP KEY
When this key is pressed, the temperature of the D.H.W. is shown on the display.

HEATING TEMP KEY
The first time the key is pressed, the temperature of heating circuit 1 is shown.
The second time the key is pressed, the temperature of heating circuit 2 is shown.

RE-SET KEY
This allows for restoring functioning after a functioning anomaly.

INCREASE AND DECREASE KEY
By pressing this key the set value increases or decreases.

3 - KEYS RESERVED FOR THE INSTALLER (access to INST and OEM parameters)

PC CONNECTION
To be used only with the SIME programming kit and only by authorised personnel. Do not connect other electronic devices (cameras, telephones, mp3 players, etc.) Use a tool to remove the cap and reinsert after use. **ATTENTION: Communication port sensitive to electrostatic charges.**
Before use, it is advisable to touch an earthed metallic surface to discharge static electricity.

INFORMATION KEY
This key can be pressed several times to view the parameters.

CHIMNEY SWEEP KEY
This key can be pressed several times to view the parameters.

DECREASE KEY
This key changes the default settings.

INCREASE KEY
This key changes the default settings.

4 - LUMINOUS BAR
Blue = Functioning
Red = Functioning anomaly

5 - PROGRAMMING CLOCK (optional)
Mechanical clock (code 8092228) or digital clock (code 8092229) to program heating.

Fig. 12

3.2 ACCESS TO INSTALLER'S INFORMATION

For access to information for the installer, press the key (3 fig. 12). Every time the key is pressed, the display moves to the next item of information. If the key is not pressed, the system automatically quits the function. List of information. Please note the first key press illuminates the display only:

1. Display of external temperature, only with external sensor connected

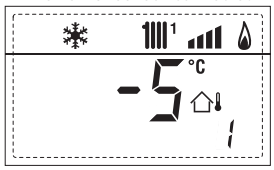

2. Display of heating temperature sensor (SM)

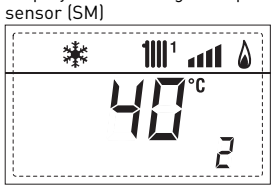

3. Display of D.H.W. temperature sensor (SS)

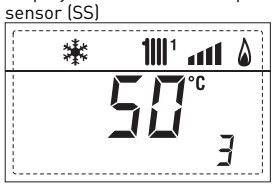

4. Display of auxiliary temperature sensor

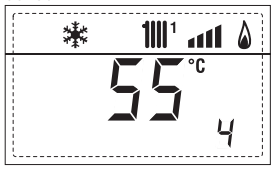

5. Display of smoke temperature sensor

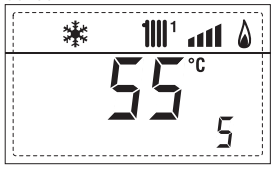

6. Display of heating temperature of first circuit

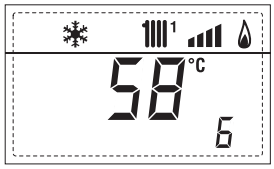

7. Display of heating temperature of second circuit

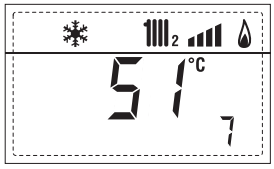

8. Display of ionisation current in μA

9. Display of fan speed in rpm x 100 (eg 4.800 and 1850 rpm)

10. Display of the number of hours x100 the burner has been alight (eg 14000 and 10)

11. Display of number of times the burner has ignited x 1000 (eg 97000 and 500)

12. Display of code of last error

13. Display of code of penultimate error

14. Display of total number of errors

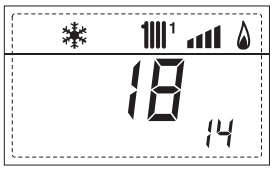

15. Installer parameter access counter (example =140 accesses)

16. OEM access counter (example = 48 accesses)

17. Indication of D.H.W. flowmeter load (i.e. 18 l/min and 0.3 l/min) or flow switch (respectively ON and OFF)

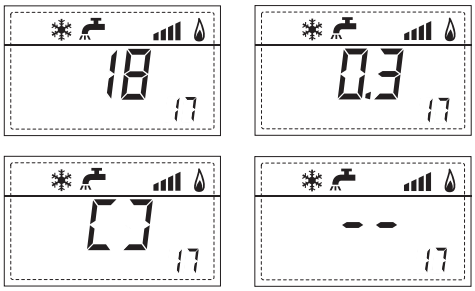

20. Indication of delivery probe value mixed with board Mixed Zone 1 (input S2)

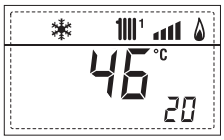

21. Indicator of safety thermostat Mixed Zone (input S1) respectively ON and OFF

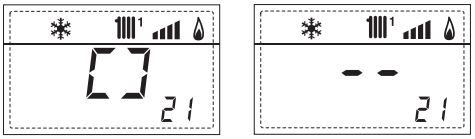

22. Indicator of pump with board Mixed Zone 1 (respectively ON and OFF)

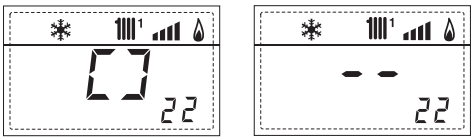

23. Indicator of valve opening control with board Mixed Zone 1 (respectively ON and OFF)

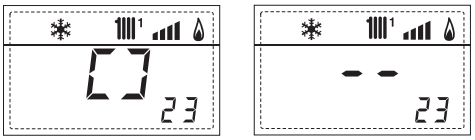

24. Indication of valve closing control with board Mixed Zone 1 (respectively ON and OFF)

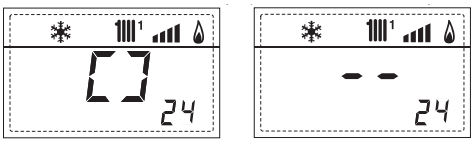

25. Indication of the delivery probe mixed with board Mixed Zone 2

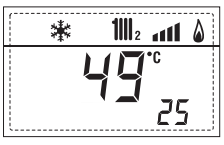

26. Indicator of safety thermostat with board Mixed Zone 2 (input S1) respectively ON and OFF

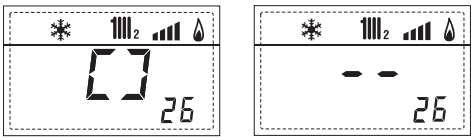

27. Indicator of pump with board Mixed Zone 2 (respectively ON and OFF)

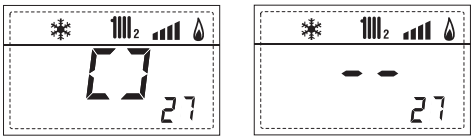

28. Indicator of valve opening control with board Mixed Zone 2 (respectively ON and OFF)

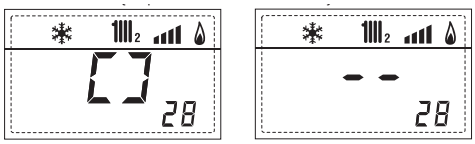

29. Indication of valve closing opening control with board Mixed Zone 2 (respectively ON and OFF)

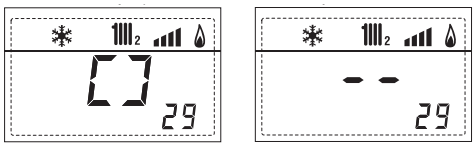

30. Indication of solar probe temperature value S1 with Insol expansion

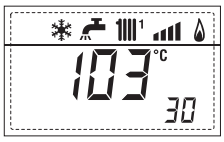

31. Indication of solar probe temperature value S2 with Insol expansion

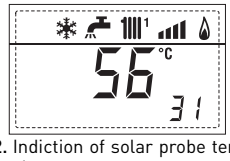

32. Indiction of solar probe temperature value S3 with Insol expansion

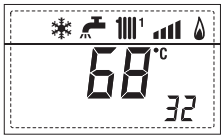

33. Indication of operation of solar relay R1 with Insol expansion (respectively ON and OFF)

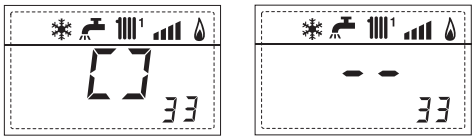

34. Indication of operation of solar relay R2 with Insol expansion (respectively ON and OFF)

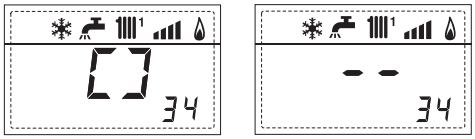

35. Indication of operation of solar relay R3 with Insol expansion (respectively ON and OFF)

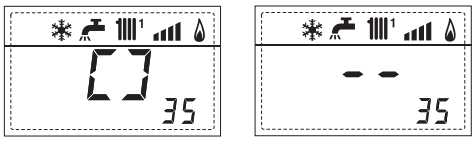

36. Visualisation solar flow meter state (respectively ON and OFF)

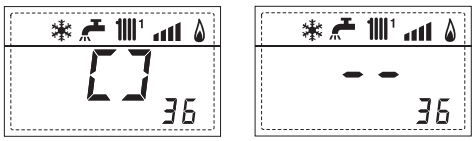

91. Software version on EXP (configuration ZONA MIX)

92. Software version on second EXP (configuration ZONA MIX)

3.3 ACCESS TO INSTALLER'S PARAMETERS

For access to the installer's parameters, press simultaneously the keys and or 5 seconds (3 fig. 12).
For example, the parameter PAR 23 is visualised on the display of the control panel in the following way:

The parameters scroll forwards and backwards with the key and and the default parameters can be changed with the keys and ,.
The standard visualisation returns automatically after 60 seconds, or by pressing one of the control keys (2 fig. 12).

3.3.1 Replacing the board or RESETTING parameters

If the electronic board is replaced or reset, it is necessary to configure PAR 1 and PAR 2 by associating the following values to each type of boiler to be able to restart the boiler:

GAS	MODELS	PAR 1
METHANE (G20)	--	1
	--	2
	--	33
	30	34
	35 - 35 T	5
PROPANE (G31)	--	6
	--	7
	--	38
	30	40
	35 - 35 T	12

BOILER	PAR 2
Instantaneous boiler with diverter valve microswitch and flow switch	1
Instantaneous boiler with diverter valve microswitch, flow switch and solar combining	2
25/55 - 30/55 and System T with cylinder sensor (SB)	3
System T with cylinder thermostat	4
Instantaneous boiler with diverter valve and flowmeter	5
Instantaneous boiler with diverter valve, flowmeter and solar combining	6
Cylinder with double pump and cylinder sensor (LOW INERTIA)	7
Cylinder with double pump and cylinder thermostat or System T (LOW INERTIA)	8
System T and antifreeze sensor (LOW INERTIA)	9

NOTE: the inside of the upper door of the boiler panel has a label with the values that have to be set for PAR 1 and PAR 2 (fig. 18).

PARAMETERS INSTALLER

FAST CONFIGURATION

PAR	DESCRIPTION	RANGE	UNIT OF MEASUREMENT	INC/DEC UNIT	DEFAULT SETTING
1	Combustion configuration	-- = ND 1 ... 46	=	=	"--"
2	Hydraulic configuration	-- = ND 1 ... 9	=	=	"--"
3	Timetable 2 programmer	1 = DHW + Recirc. pump 2 = DHW 3 = Recirculation pump	=	=	1
4	Pressure transducer disabler	0 = Disabled 1 = Enabled 2 = Enabled (NO ALL 09)	=	=	1
5	Assignment of auxiliary relay AUX (D.H.W. tank)	1 = Remote Alarm signal (N.O.) 2 = Recirculation pump	=	=	1
6	Luminous bar indicating presence of voltage	0 = Disabled 1 = Enabled	=	=	1
7	Allocation of SIME HOME channels	0 = Not assigned 1 = Circuit 1 2 = Circuits 1 and 2	=	=	1
8	Fan rpm Step ignition	0,0 ... 81	rpm x 100	**0,1**da 0,1a19,9 **1**da 20 a 81	0,0
9	Long chimneys	0 ... 20	%	1	0
10	Remote control option setting	1 = SIME HOME 2 = CR 53 3 = RVS	=	=	1
11	Correction values external sensor	-5 ... +5	°C	1	0
12	Backlighting duration	-- = Always 0 = Never 1 ... 199	sec. x 10	1	3
13	Modulating pump speed	0 = Minimum 1 = Maximum 2 = Automatic	=	=	1

D.H.W. - HEATING

PAR	DESCRIPTION	RANGE	UNIT OF MEASUREMENT	INC/DEC UNIT	DEFAULT SETTING
20	D.H.W. min. temperature	10 °C ... PAR 21	°C	1	30
21	D.H.W. max. temperature	PAR 20 ... PAR 62 OEM	°C	1	60
22	Anti-legionella (only D.H.W. tank)	0 = Disabled 1 = Enabled	=	=	0
23	Boiler antifreeze	0 ... +20	°C	1	3
24	External sensor antifreeze	- 15 ... +5	°C	1	- 2
25	Climatic curve setting Zone 1	3 ... 40	=	1	20
26	Climatic curve setting Zone 2	3 ... 40	=	1	20
27	Min. temperature Zone 1	PAR 64 OEM ... PAR 28	°C	1	20
28	Min. temperature Zone 1	PAR 27 ... PAR 65 OEM	°C	1	80
29	Min. temperature Zone 2	PAR 64 OEM ... PAR 30	°C	1	20
30	Max. temperature Zone 2	PAR 29 ... PAR 65 OEM	°C	1	80
31	Max. heating power	30 ... 100	%	1	100
32	C.H. pump over-run time	0 ... 199	Sec.	10	30
33	Pump activation delay Zone 1	0 ... 199	10 sec.	1	1
34	Re-ignition delay	0 ... 10	Min.	1	3
35	Integr. sources activat. threshold	-- , 15 ... 80	°C	1	"--"
36	D.H.W. pump over-run time	0 ... 199	Sec.	1	0
39	Saturation zone modulation D.H.W. flowmeter	-- = Enabled 0 ... 100	%	1	100

PARAMETERS INSTALLER

EXPANSION CARD

PAR	DESCRIPTION	RANGE	UNIT OF MEASUREMENT	INC/DEC UNIT	DEFAULT SETTING
40	Number of expansion boards	0 ... 3	=	1	0
41	Mix valve stroke time	0 ... 199	10 sec.	1	12
42	Priority of D.H.W. over mixed zone	0 = Paralle 1 = Absolute	=	=	1
43	Floor drying	0 = No activated 1 = Curve A 2 = Curve B 3 = Curve A+B	=	=	0
44	Type of solar system	1 ... 7	=	1	1
45	Δt solar collector pump 1	PAR 74 OEM - 1... 50	°C	1	8
46	Solar integration delay	"--", 0 ... 199	Min.	1	0
47	Tmin solar collector	"--", -30 ... 0	°C	1	- 10
48	Tmax solar collector	"--", 80 ... 199	°C	1	120

PARAMETERS RESTORATION

PAR	DESCRIPTION	RANGE	UNIT OF MEASUREMENT	INC/DEC UNIT	DEFAULT SETTING
49*	Reset default parameters (par 01 - par 02 = "-")	-- , 1	=	=	=

** Should the boiler not be operating correctly, the original default values can be reset by setting PAR 49 = 1 and the PAR 1 and PAR 2 as specified at point 3.3.1.*

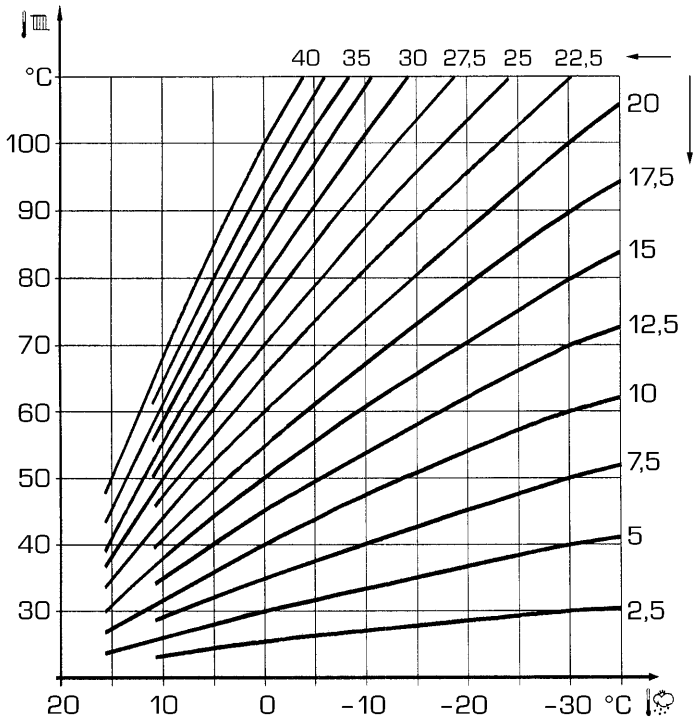

ATTENTION: curves are calculated at an ambient temperature of 20°C. The user can alter the boiler controls to change the environment set for which curve has been calculated by ±5°C.

Fig. 13

3.4 EXTERNAL SENSOR (fig. 13)

If there is an external sensor, the heating settings SET can be taken from the climatic curves according to the external temperature and, limited to with the range values described in point 3.3 (parameters PAR 25 for zone 1 and PAR 26 for zone 2).
The climatic curve to be set can be selected from a value of 3 and 40 (at step 1).
Increasing the steepness of the curves of fig. 13 will increase the output temperature as the external temperature decreases.

3.5 CARD FUNCTIONING

The electronic card has the following functions:
- Antifreeze protection of the heating and D.H.W. circuits (ICE).
- Ignition and flame detection system.
- Control panel setting for the power and the gas for boiler functioning.
- Anti-jamming for the pump which is fed for a few seconds after 24 hours of inactivity.
- Antifreeze protection for boilers with D.H.W. storage tank.
- Chimney sweep function which can be activated from the control panel.
- Temperature which can be shifted with the external sensor connected.
  It can be set from the control panel and is active on the heating systems of both circuit 1 and circuit 2.
- Management of two independent heating circuit systems.
- Automatic regulation of the ignition power and maximum heating.
  Adjustments are managed automatically by the electronic card to guarantee maximum flexibility in use of the system.
- Interface with the following electronic systems: remote control SIME HOME code 8092280/81, thermal regulator RVS, connected to a management card of a mixed Zone code 8092234 and card Solar code 8092235.
  NOTE: If using RVS set parameter 10 to 3 (PAR 10 = 3).

3.6 TEMPERATURE DETECTION SENSOR

Table 3 shows the resistance values of the heating, D.H.W. and fumes sensors.

If the heating sensor (SM) is faulty or open circuit, the boiler will not function on either heating or D.H.W. (ALL 05).

If the exhaust fumes sensor (SF) is faulty or open circuit, the boiler will not function on either heating or D.H.W.

(ALL 14).

If the D.H.W. sensor (SS) is faulty or open circuit, the boiler will work without modulation to the DHW temperature.

TABLE 3 (SM - SS - SF sensors)

Temperature (°C)	Resistance (Ω)
20	12.090
30	8.313
40	5.828
50	4.161
60	3.021
70	2.229
80	1.669

3.7 ELECTRONIC IGNITION

Ignition and flame detection is controlled by electrodes on the burner which guarantees reaction in the case of accidental extinction or lack of gas within one second.

3.7.1 Functioning cycle

Burner ignition should occur within 10 seconds of the opening of the gas valve.
If after three attempts the ignition is not detected the boiler will lockout (ALL 06):

- **Lack of gas**
  The ignition electrode will discharge for a maximum of 10 seconds. If after three attempts the ignition is not detected the boiler will lockout (ALL 06). This can happen the first time a boiler is switched on, or after long periods of inactivity. It can also be caused by a closed gas cock or a gas valve not operating.

- **No ionisation**
  The boiler will spark for 10 seconds, if after 3 attempts the ionisation is not detected, the boiler will lockout (ALL 06). This could be due to a poor connection or break in the ionisation cable. Check also that the cable is not shorted, badly worn or distorted.

In the case of a sudden loss of voltage, the burner will immediately switch off. When voltage returns, the boiler will automatically start up again.

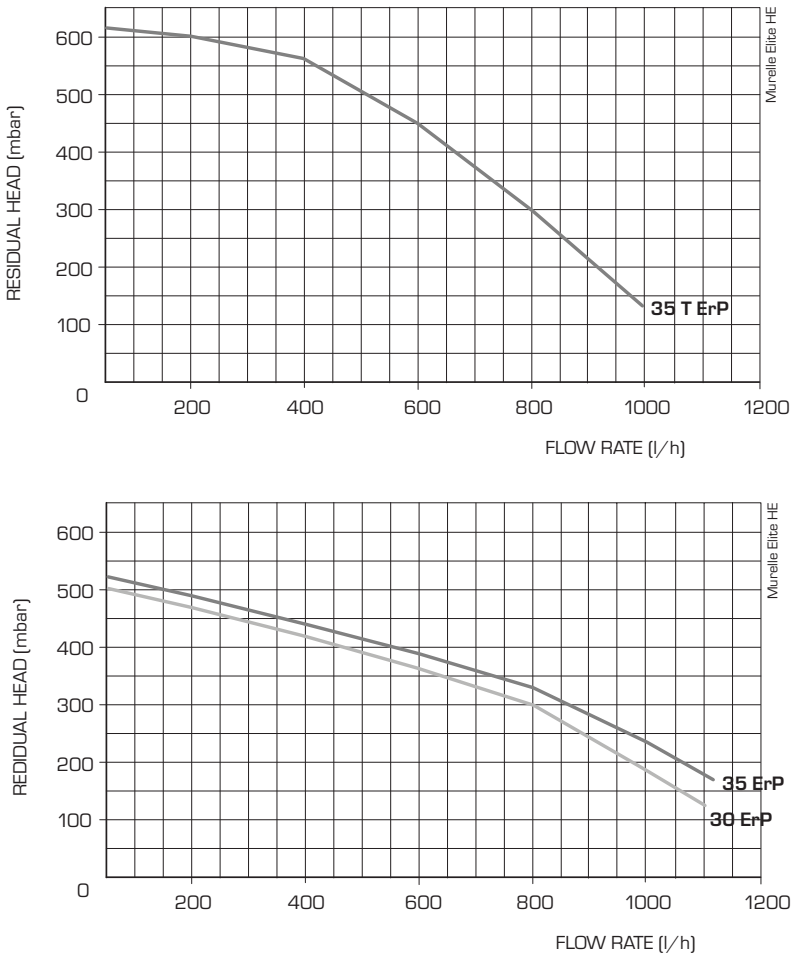

Fig. 14

3.8 HEAD AVAILABLE TO SYSTEM (fig. 14)

Residual head for the heating system is shown as a function of rate of flow in the graph in fig. 14.

4 USE, MAINTENANCE, BENCHMARK and COMMISSIONING

4.1 GAS VALVE (fig. 16)

The boiler is supplied as standard with a gas valve, model SIT 848 SIGMA (Fig. 16).

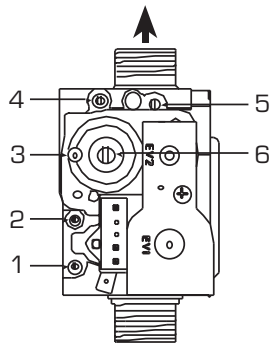

KEY
1 Upstream pressure intake
2 Intermediate pressure intake
3 Air signal inlet (VENT)
4 Downstream pressure intake
5 Capacity step
6 OFF-SET

Fig. 16

4.2 GAS CONVERSION (fig. 17)

This operation must be performed by authorised personnel using original Sime components. To convert from natural gas to LPG or vice versa, perform the following operations:

- Close the gas cock.
- Replace the two differential nozzles (1-2) and relative seal o-rings (3) with those supplied in the conversion kit. The difference in the shape of the head of the nozzles should be noted, avoid reversal during assembly.
- Reset PAR as shown in 4.2.1.
- Apply the nameplate with the new gas flow layout.
- Calibrate the maximum and minimum pressures of the gas valve following the instructions provided in paragraph 4.2.2.

4.2.1 New fuel configuration

For access to the installer's parameters, press simultaneously keys and for 5 seconds (3 fig. 12).
Scroll through the parameters using the and buttons.
The SET of the parameter is changed using the and ..
The display pane will show the values of the parameter PAR 1.
If the boiler is a vers. **30** methane (G20) model, SET 34 will be displayed:

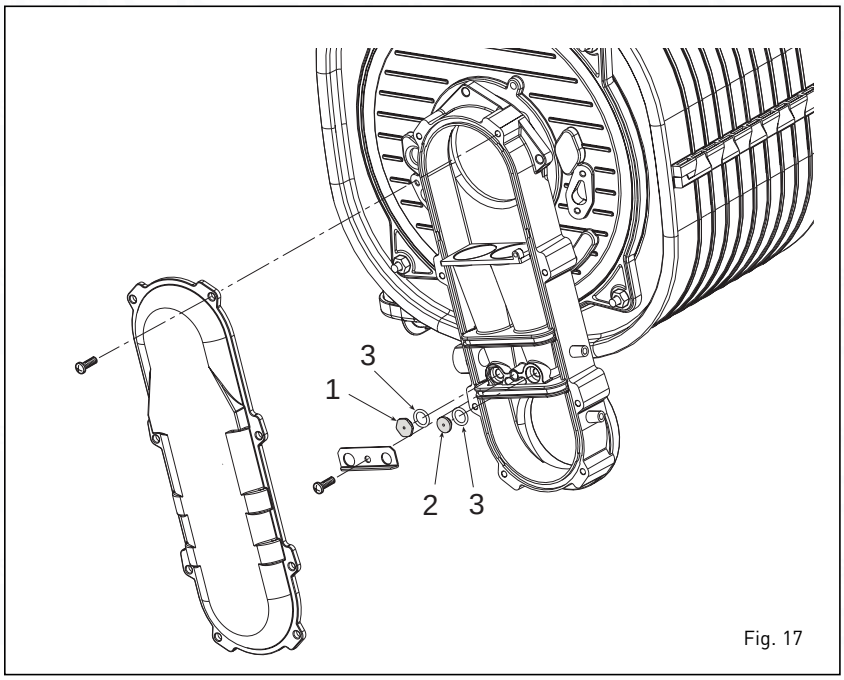

Fig. 17

To change the fuel to propane (G31), it is necessary to set SET 40, by pressing the key .

The standard display will automatically return after 10 seconds.

The table below shows the SET settings to enter when the type of gas fuel is changed.

GAS	MODELS	PAR 1
METHANE (G20)	--	1
	--	2
	--	33
	30	34
	35 - 35 T	5
PROPANE (G31)	--	6
	--	7
	--	38
	30	40
	35 - 35 T	12

4.2.2 Calibrating the gas valve pressures (see 4.8.1)

This can only be done using a flue gas analyser. If the combustion reading is greater than the acceptable value AND the integrity of the complete flue system and combustion seals have been verified, and the inlet gas pressure has been verified then adjustments to the gas valve can be made as described below. Make only small adjustments (1/8 turn max), and allow time for the combustion analysis to be made before making further adjustments.

Sequence of operations:

1) Press and hold the button down for a few seconds.
2) Press the button for a few seconds .
3) Identify the CO_2 value at max power, adjust using the shutter (5 fig. 16):

MAX power	
CO_2 (Methane)	CO_2 (Propane)
9,0 ±0,3	10,0 ±0,3

4) Press the button for a few seconds .
5) Identify the CO_2 value at min power, adjust using the OFF-SET regulation screw (6 fig. 16):

MIN power	
CO_2 (Methane)	CO_2 (Propane)
9,0 ±0,3	10,0 ±0,3

6) Press the min and max values several times using the . and buttons, reset as necessary.
7) Press the button once more to quit the function.

4.3 RATIO

CO ppm	
100	400
0,0011	0,0044
0,0010	0,0040

4.4 REMOVING THE COVERS (fig. 18)

It is possible to completely remove the covers for easier access as shown in fig 18. The control panel can be hinged forward after removing the front cover

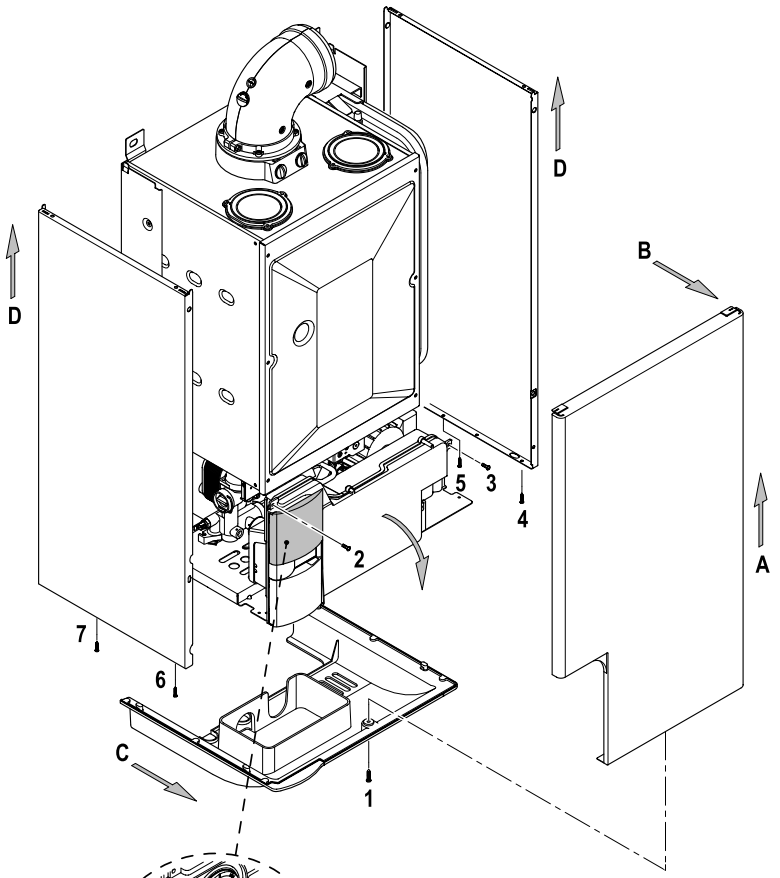

ATTENTION
Before removing or refitting the front panel of the boiler, open the small upper plastic door.

Code 8114312
Model MURELLE ELITE HE 30 ErP
Serial n. 9999999999
GC No 47-283-56

PAR 1 = 34 (NG) / 40 (LPG)
PAR 2 = 5

Fig. 18

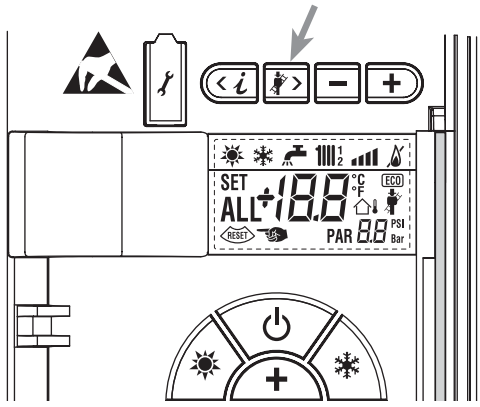

Fig. 19

and the retaining screw 2.

4.5 MAINTENANCE

As a condition of the warranty and to ensure correct operation and efficiency it is important that the boiler is serviced at regular intervals, at least once a year. This must be done only by a qualified technician. During the routine service the condensate drain can be checked. It is important should the boiler not be used for some time that the trap is checked and filled if required. This can be done by carefully injecting water into the flue exhaust test point.

4.5.1 Chimney sweep function (fig. 19)

To check the boiler combustion press the Chimney sweep button for a few seconds, the Chimney sweep icon will illuminate. The boiler will ignite and continue for 15 minutes in heating mode. The burner will turn off at 80 degrees and reignite at 70 degrees.
(WARNING! Ensure adequate circulation around heating system before activating the Chimney sweep function).
The test can also be carried out using the boiler in D.H.W. mode. After activating Chimney sweep, turn on a D.H.W. tap.
Under these circumstances the boiler will operate at maximum power with the D.H.W. circuit kept between 60 degrees and 50 degrees, the tap must remain open.
If the + and − keys are presses during the 15 minutes the boiler will be brought respectively to max and min output. The chimney sweep function will automatically cancel after 15 minutes or if the chimney sweep button is pressed again.

4.5.2 Cleaning the "Aqua Guard Filter System" (fig. 20)

To clean the filter, first close the flow and return isolation valves. Drain the boiler using the drain vent. Place a container underneath the filter, and unscrew the filter. Clean the filter and replace.
Check the o-ring seal after refilling the boiler.

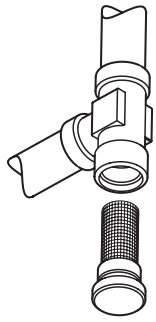

Fig. 20

4.6 FUNCTIONING ERRORS

Where there is a functioning error an alarm appears on the display. **The blue luminous bar may turn red.**
Descriptions of the error are given below:

- **FLUE TEMPERATURE ALARM 01 (fig. 21)**
  Check link on terminals 54-56 at PCB.

- **LOW SYSTEM PRESSURE ALARM 02**
  If the system pressure detected by the transducer is lower than 0.5 bar the boiler will stop and display error "ALL 02". Increase the system pressure to between 1.0 and 1.5 bar using the external filling loop.
  The boiler will automatically resume operating.

- **HIGH SYSTEM PRESSURE ALARM 03**
  If the system pressure detected by the transducer is more than 2.8 bar, the boiler will stop and display "ALL 03". Drain water from the system until the pressure is between 1.0 and 1.5 bar. Ensure that the filling loop is disconnected. If the problem persists, seek technical advice.

- **D.H.W. SENSOR ALARM 04**
  If the D.H.W. sensor (SS) is open or short circuit, the boiler will continue to operate but without control of the D.H.W. temperature. The display will show "ALL 04".

- **HEATING SENSOR ALARM 05**
  If the heating sensor (SM) is open or short cicuit, the boiler will stop operating and display "ALL 05".

- **LOCKOUT ALARM 06 (fig. 22)**
  If a flame is not detected after a complete ignition cycle or for any other reason the flame is not detected, the boiler will stop and display "ALL 06". Press the reset button RESET on the control panel (2) to restart the boiler. Should the problem persist seek technical help.

- **SAFETY THERMOSTAT ALARM 07 (fig. 23)**
  If either the 100 degree stat or the heat exchanger safety stat open, the burner will turn off. If the stat closes within 1 minute, the boiler will resume operation. If the stat remains open for more than 1 minute the display will show "ALL 07". Press the reset key RESET on the control panel (2) to restart the boiler. If the problem persists seek technical advice.

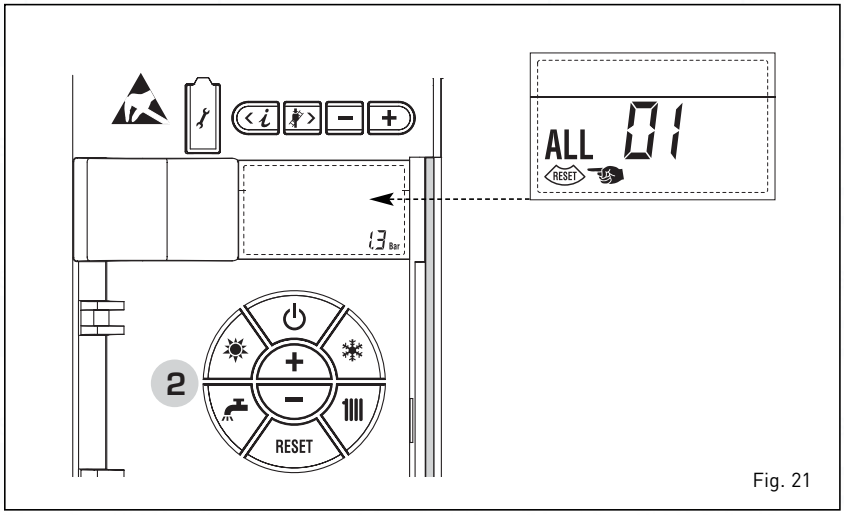

Fig. 21

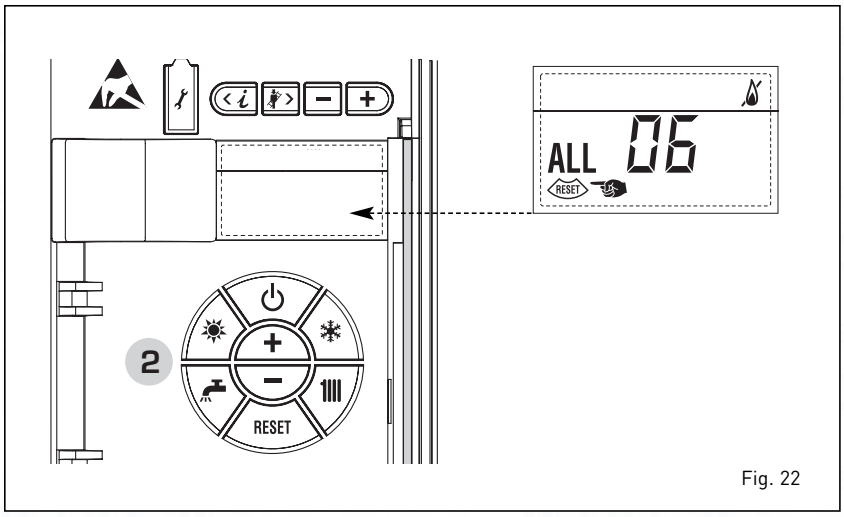

Fig. 22

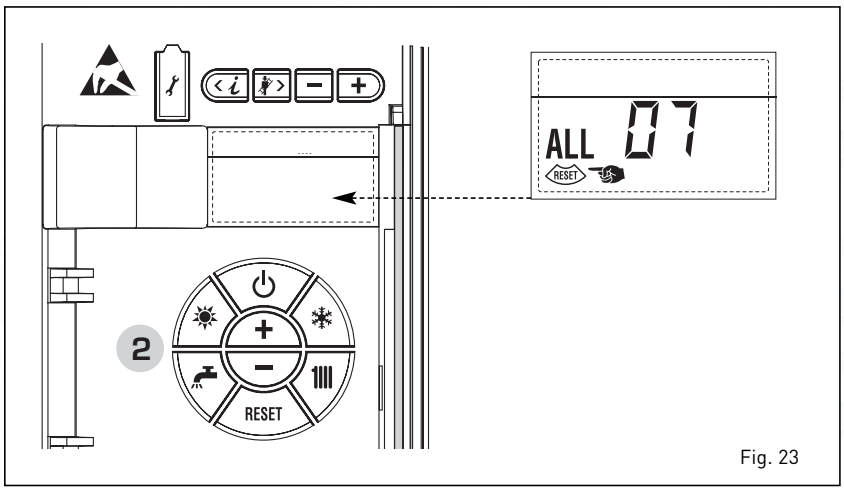

Fig. 23

– FLAME DETECTION ERROR 08
If the flame control detects aflame when one should not be detected, the boiler will stop and display "ALL 08".

– WATER CIRCULATION ERROR 09
1. Water circulation has not been detected bin the primary(boiler) circuit. If this error is detected the boiler will make two further attempts. if circulation is not detected the boiler will stop and ALL 09 will be displayed. NOTE: Circulation is detected by a small increase in pressure at the transducer when the pump is energised. In large systems this may not be detected and can be disabled by alteration of PAR4.
2. The flow temperature sensor has detected a temperature rise in excess of 5 degrees per second. Check to see if there is water circulation inside the boiler and check if the pump is operating properly. To exit the anomaly press the button of the controls (2). If the anomaly persists, request assistance from qualified technical personnel.

– AUXILIARY SENSOR ANOMALY ERROR 10
BOILER WITH ACCUMULATION: anomaly of the D.H.W. sensor. When the D.H.W. sensor is open or short circuited, the display will show anomaly "ALL 10". The boiler will function but will not modulate power for the D.H.W.
BOILER ONLY FOR HEATING: antifreeze sensor anomaly for boilers which foresee the use of antifreeze sensors. When the sensor is open or short circuited, the boiler loses part of its anti-freeze functions and the display will show anomaly "ALL 10".
BOILER COMBINED WITH SUN-PANEL SYSTEM: anomaly of the D.H.W. input sensor. When the sensor is open or short circuited, the boiler loses the sun-panel function and the display will show anomaly "ALL 10".

– ACTIVATION OF THE EXHAUST FUMES SENSOR ERROR 13
The activation of this probe causes the boiler to stop and error message "ALL 13" to display. Press the key RESET of the controls (2) to start up the boiler again.

– EXHAUST FUMES SENSOR ERROR 14
If the exhaust fumes sensor is open or short circuit, the boiler will stop and display "ALL 14".

– FAN ERROR 15
If the fan speed is not within the rated speed range,the display will show "ALL 15". If the problem persists for more than two minutes the boiler will stop thirty minutes, after which it will attempt to resume operating.

– SAFETY THERMOSTAT INTERVENTION FIRST MIXED ZONE "ALL 20"
When the mixed zone board is connected to the boiler, a safety thermostat intervention switches the mixed zone pump, the mixed zone valve closes and the display indicates error ALL 20. During this this error the boiler functions normally

– DELIVERY PROBE FAILURE FIRST MIXED ZONE "ALL 21"
When the mixed zone board is connected to the boiler. If the delivery probe becomes open or short circuit the display will indicate ALL21. During this error the boiler continues to function normally.

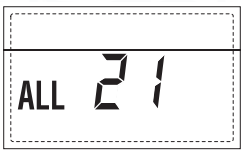

– SAFETY THERMOSTAT INTERVENTION SECOND MIXED ZONE "ALL 22"
When the mixed zone board is connected to the boiler.
An intervention of the safety thermostat switches the mixed zone pump , the mixed zone valve closes and the display indicates ALL 22.
During this error the boiler functions normally.

– DELIVERY PROBE BREAKDOWN ANOMALY SECOND MIXED ZONE "ALL 23"
When the mixed zone board is connected to the boiler. If the delivery probe is open or short circuited the display indicates error ALL 23. During this error the boiler functions normally.

– SOLAR S1 COLLECTOR PROBE FAILURE "ALL 24"
When the Insol board is connected to the boiler. If the S1 solar collector probe becomes open or short circuit the display indicates ALL 24. During this error the boiler functions normally.

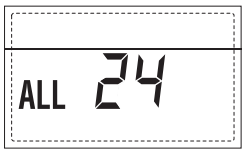

– SOLAR S2 BOILER PROBE FAILURE "ALL 25"
When the Insol board is connected to the boiler. If the S2 solar collector probe becomes open or short circuit the display indicates ALL 25. During this error the boiler functions normally.

– S3 SOLAR PROBE FAILURE "ALL 26"
When the Insol board is connected to the boiler. If the S3 solar collector probe becomes open or short circuit the display indicates ALL 26. During this error the boiler functions normally.

– SOLAR APPLICATION CONFIGURATION "ALL 27"
When the Insol board is connected to the boiler. If the hydraulic configuration of the boiler is incorrect (PAR2), the display indicates error ALL 27. During this error the boiler

continues to function normally, and only the antifreeze function on the solar board is active.

- COMPATIBILITY INPUT (S3) ANOMALY ONLY FOR SYSTEM 7 "ALL 28"
  When a probe is connected instead of a clean contact on entry S3 the board on display shows the anomaly ALL 28. During this anomaly the boiler continues to function normally but for the board is active in the solar anomaly, the function is only available antifreeze collector.

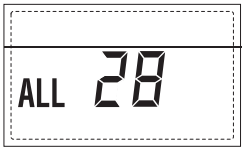

- NUMBER OF CONNECTED BOARDS ERROR "ALL 29"
  When the number of connected boards does not correspond to the number of boards set in the PCB (PAR 40) or there is a failure of communication with it, on the display the indicates ALL 29. During this error, the boiler continues to function normally.

4.7 COMMISSIONING AND ROUTINE SERVICE

Commissioning and servicing can only be done by a qualified engineer.

4.7.1 Commissioning and Service

The gas valve is factory set and should require no adjustment.
PLEASE NOTE: The combustion for this appliance has been checked, adjusted and preset at the factory for operation on the gas type specified on the appliance data plate. It is now mandatary to check for correct combustion and record the results in the Benchmark Commissioning Checklist using the procedure as described in 4.8.1, having first checked:

- That the boiler has been installed in accordance with these instructions.
- The integrity of the flue system and the flue seals
- The integrity of the boiler combustion circuit and the relevant seals.

Proceed to put the boiler into operation as follows, after installation a gas purge and tightness/drop test have been made.
Ensure that the auto air vent (17 fig. 3) is opened, turn the electrical supply on.
With the boiler on standby fill the system and pressurise to 1.5 bar. Ensure that the pump has been manually rotated.
Open the gas cock, press the "❄ mode key" (fig. 12). Ensure that any timers or room thermostats are in the on position.
The boiler will attempt to light.

4.8 CHECK THE OPERATIONAL (WORKING) GAS INLET PRESSURE

Set up the boiler to operate at maximum rate condition (chimney sweep) as described in 4.5.1.
With the boiler operating in the maximum rate condition, check that the operational (working) gas pressure at the inlet test point (see fig 16 item 1), complies with the requirements of 1.3.
Ensure that this inlet pressure can be maintained with all other appliances in the property working

4.8.1 Combustion Check (fig. 24)

Competence to carry out the check of combustion performance.
PLEASE NOTE:
BS 6798: 2009 Specification for installation and maintenance of gas-fired boilers of rated input not exceeding 70kw net advises that:

- The person carrying out a combustion measurement should have been assessed as competent in the use of a flue gas analyser and the interpretation of the results;
- The flue gas analyser should be one meeting the requirements of BS7927 or BS-EN50379-3 and be calibrated in accordance with the analyser manufacturers requirements, and
- Competence can be demonstrated by satisfactory completion of the CPA1 ACS assessment which covers the use of electronic portable combustion gas analysers in accordance with BS7967, parts 1 to 4.

Conduct a flue gas analysis as detailed in Appendix 2. See 4.5.1 "Chimney sweep" for details how to set the boiler to minimum and maximum outputs.

4.8.2 Burner inspection

Remove the burner as described in section 6.4.
Inspect the burner and if necessary clean using a soft brush, taking care not to damage the front insulation.
Check the Ignition/ionisation electrode, check the ignition spark gap (4 mm+/- 0.5 mm).
Check the ionisation electrode, check the distance from the burner (18.7 mm+/- 1 mm).
Before reassembly inspect all seals and replace as required.

4.8.3 Combustion Chamber

Remove any loose debris from the combustion chamber using a soft brush and a vacuum cleaner.
Take care not to damage the rear insulation panel.

4.8.4 Condensate Trap

The condensate trap would not normally require removal during service, but can be checked whilst the burner assembly is removed.
Carefully pour water into the heat exchanger and check that it flows freely to the drain.
Should it require removal, firstly remove the two wire clips securing the condensate drain rubber pipe to the heat exchanger and the condensate trap.
Remove the pipe.
Remove the 1/2" nut securing the condensate trap to the combustion compartment.
Disconnect the drain pipe from the trap.
Clean the trap and refit in reverse order.

4.8.5 Aqua Guard Filter

It is recommended that the Aqua Guard filter is checked at each service. See section 4.5.2.

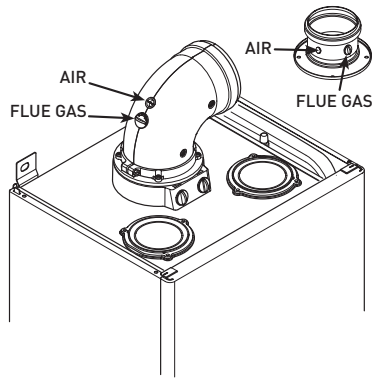

Fig. 24

GAS BOILER SYSTEM COMMISSIONING CHECKLIST

This Commissioning Checklist is to be completed in full by the competent person who commissioned the boiler as a means of demonstrating compliance with the appropriate Building Regulations and then handed to the customer to keep for future reference.

Failure to install and commission according to the manufacturer's instructions and complete this Benchmark Commissioning Checklist will invalidate the warranty. This does not affect the customer's statutory rights.

Customer name:	Telephone number:
Address:	
Boiler make and model:	
Boiler serial number:	
Commissioned by (PRINT NAME):	Gas Safe register number:
Company name:	Telephone number:
Company address:	
	Commissioning date:
To be completed by the customer on receipt of a Building Regulations Compliance Certificate*	
Building Regulations Notification Number (if applicable):	

CONTROLS (tick the appropriate boxes)				
Time and temperature control to heating	Room thermostat and programmer/timer		Programmable room thermostat	
	Load/weather compensation		Optimum start control	
Time and temperature control to hot water	Cylinder thermostat and programmer/timer		Combination Boiler	
Heating zone valves	Fitted		Not required	
Hot water zone valves	Fitted		Not required	
Thermostatic radiator valves	Fitted		Not required	
Automatic bypass to system	Fitted		Not required	
Boiler interlock			Provided	

ALL SYSTEMS				
The system has been flushed and cleaned in accordance with BS7593 and boiler manufacturer's instructions			Yes	
What system cleaner was used?				
What inhibitor was used?		Quantity		litres
Has a primary water system filter been installed?	Yes		No	

CENTRAL HEATING MODE measure and record:			
Gas rate	m^3/hr	**OR**	ft^3/hr
Burner operating pressure (if applicable)	mbar	**OR** Gas inlet pressure	mbar
Central heating flow temperature			°C
Central heating return temperature			°C

COMBINATION BOILERS ONLY				
Is the installation in a hard water area (above 200ppm)?	Yes		No	
If yes, and if required by the manufacturer, has a water scale reducer been fitted?	Yes		No	
What type of scale reducer has been fitted?				
DOMESTIC HOT WATER MODE Measure and Record:				
Gas rate	m^3/hr	**OR**	ft^3/hr	
Burner operating pressure (at maximum rate)	mbar	**OR** Gas inlet pressure at maximum rate	mbar	
Cold water inlet temperature			°C	
Hot water has been checked at all outlets	Yes		Temperature	°C
Water flow rate				l/min

CONDENSING BOILERS ONLY		
The condensate drain has been installed in accordance with the manufacturer's instructions and/or BS5546/BS6798	Yes	

ALL INSTALLATIONS							
Record the following:	At max. rate:	CO	ppm	**AND**	CO/CO_2	Ratio	
	At min. rate: (where possible)	CO	ppm	**AND**	CO/CO_2	Ratio	
The heating and hot water system complies with the appropriate Building Regulations						Yes	
The boiler and associated products have been installed and commissioned in accordance with the manufacturer's instructions						Yes	
The operation of the boiler and system controls have been demonstrated to and understood by the customer						Yes	
The manufacturer's literature, including Benchmark Checklist and Service Record, has been explained and left with the customer						Yes	

Commissioning Engineer's Signature
Customer's Signature
(To confirm satisfactory demonstration and receipt of manufacturer's literature)

*All installations in England and Wales must be notified to Local Authority Building Control (LABC) either directly or through a Competent Persons Scheme. A Building Regulations Compliance Certificate will then be issued to the customer.

© Heating and Hotwater Industry Council (HHIC)

benchmark COLLECTIVE MARK
THE MARK OF QUALITY FOR THE INSTALLATION, COMMISSIONING AND SERVICING OF DOMESTIC HEATING AND HOT WATER SYSTEMS

www.centralheating.co.uk

SERVICE RECORD

It is recommended that your heating system is serviced regularly and that the appropriate Service Interval Record is completed.

Service Provider

Before completing the appropriate Service Record below, please ensure you have carried out the service as described in the manufacturer's instructions. Always use the manufacturer's specified spare part when replacing controls.

SERVICE 01					Date:
Engineer name:					
Company name:					
Telephone No:					
Gas safe register No:					
Record:	At max. rate:	CO	ppm	**AND**	CO_2 %
	At min. rate: (Where Possible)	CO	ppm	**AND**	CO_2 %
Comments:					
Signature					

SERVICE 02					Date:
Engineer name:					
Company name:					
Telephone No:					
Gas safe register No:					
Record:	At max. rate:	CO	ppm	**AND**	CO_2 %
	At min. rate: (Where Possible)	CO	ppm	**AND**	CO_2 %
Comments:					
Signature					

SERVICE 03					Date:
Engineer name:					
Company name:					
Telephone No:					
Gas safe register No:					
Record:	At max. rate:	CO	ppm	**AND**	CO_2 %
	At min. rate: (Where Possible)	CO	ppm	**AND**	CO_2 %
Comments:					
Signature					

SERVICE 04					Date:
Engineer name:					
Company name:					
Telephone No:					
Gas safe register No:					
Record:	At max. rate:	CO	ppm	**AND**	CO_2 %
	At min. rate: (Where Possible)	CO	ppm	**AND**	CO_2 %
Comments:					
Signature					

SERVICE 05					Date:
Engineer name:					
Company name:					
Telephone No:					
Gas safe register No:					
Record:	At max. rate:	CO	ppm	**AND**	CO_2 %
	At min. rate: (Where Possible)	CO	ppm	**AND**	CO_2 %
Comments:					
Signature					

SERVICE 06					Date:
Engineer name:					
Company name:					
Telephone No:					
Gas safe register No:					
Record:	At max. rate:	CO	ppm	**AND**	CO_2 %
	At min. rate: (Where Possible)	CO	ppm	**AND**	CO_2 %
Comments:					
Signature					

SERVICE 07					Date:
Engineer name:					
Company name:					
Telephone No:					
Gas safe register No:					
Record:	At max. rate:	CO	ppm	**AND**	CO_2 %
	At min. rate: (Where Possible)	CO	ppm	**AND**	CO_2 %
Comments:					
Signature					

SERVICE 08					Date:
Engineer name:					
Company name:					
Telephone No:					
Gas safe register No:					
Record:	At max. rate:	CO	ppm	**AND**	CO_2 %
	At min. rate: (Where Possible)	CO	ppm	**AND**	CO_2 %
Comments:					
Signature					

SERVICE 09					Date:
Engineer name:					
Company name:					
Telephone No:					
Gas safe register No:					
Record:	At max. rate:	CO	ppm	**AND**	CO_2 %
	At min. rate: (Where Possible)	CO	ppm	**AND**	CO_2 %
Comments:					
Signature					

SERVICE 10					Date:
Engineer name:					
Company name:					
Telephone No:					
Gas safe register No:					
Record:	At max. rate:	CO	ppm	**AND**	CO_2 %
	At min. rate: (Where Possible)	CO	ppm	**AND**	CO_2 %
Comments:					
Signature					

*All installations in England and Wales must be notified to Local Authority Building Control (LABC) either directly or through a Competent Persons Scheme. A Building Regulations Compliance Certificate will then be issued to the customer.

© Heating and Hotwater Industry Council (HHIC)

benchmark COLLECTIVE MARK
THE MARK OF QUALITY FOR THE INSTALLATION, COMMISSIONING AND SERVICING OF DOMESTIC HEATING AND HOT WATER SYSTEMS

www.centralheating.co.uk

5 FAULT FINDING AND FUNCTIONING ERRORS

If an electrical fault occurs on the appliance the preliminary electrical system checks must be carried out first.
When any service or replacement of electrical components which has required the breaking and re-making of electrical connections has taken place, the following tests must be repeated:
- earth continuity;
- short circuit;
- polarity;
- resistance to earth.

5.1 EARTH CONTINUITY CHECK

Appliances must be electrically disconnected, meter set on Ω (ohm) x 1 scale and adjust zero if necessary. Tests leads from any appliance earth point (e.g. inside control box) see wiring diagrams (section 7) to earth pin on plug.
Resistance should be less than 1 Ω (ohm). If the resistance is greater than 1 Ω (ohm) check all earth wires for continuity and all contacts are clean and tight. If the resistance to earth is still greater than 1 Ω (ohm) then this should be investigated futher.

5.2 SHORT CIRCUIT CHECK

Switches turned FULL ON - meter set on Ω (ohms) x 1 scale. Test leads from L to N on appliance terminal block, if meter reads 0 then there is a short circuit.
Meter set on Ω (ohm) x 100 scale. Repeat it with leads from L to E. If meter reads less than infinity (∞) there is a fault.

NOTE: Should it be found that the fuse has failed but no fault is indicated, a detailed continuity check (i.e. by disconnecting and checking each component) is required to trace the faulty component. It is possible that a fault could occur as a result of local burning/arcing but no fault could be found under test. However, a detailed visual inspection should reveal evidence of burning around the fault.

5.3 POLARITY CHECK

Appliance reconnected to mains supply and meter set on 300 V ac scale. Test at appliance terminal block.
- Test leads from L to N meter reads approx.: 240 V ac.
- Test leads from L to E " ✳ " meter reads approx. 240 V ac.
- Test leads from N to E " ✳ " meter reads from 0 to 15 V ac.

5.4 RESISTANCE TO EARTH CHECK

Appliance must be disconnected from main supply and meter on Ω (ohm) x 100 scale.
All switches including thermostat on test leads from L to E - if meter reads other than infinity (∞) there is a fault which should be isolated.
A detailed continuity check is required to trace the faulty component.

IMPORTANT:
These series of checks are the first electrical checks to be carried out during a fault finding procedure. On completion of the service/fault finding task which has required the breaking and remaking of electrical connections then the checks 5.1 Earth continuity, 5.3 Polarity and 5.4 Resistance to earth must be repeated.

5.5 FUNCTIONING ERRORS

Should the boiler encounter a functioning error, the blue strip may change to red and a error code displayed on the screen example "ALL 02".
A list of functioning errors with possible solutions are shown in section 4.6.

6 REPLACEMENT OF PARTS

6.1 EXPANSION VESSEL

- Turn off power supply
- Remove boiler cover, see 4.4.
- Isolate flow and return valves
- Drain boiler using fitted drain vent
- Disconnect expansion pipe
- Loosen top fixing screw and remove lower fixing screw
- Remove vessel
- Check new vessel for correct pressure 1- 1.25 bar
- Refit in reverse order.

6.2 IGNITION ELECTRODE

- Turn off power supply
- Remove boiler cover see 4.4
- Remove sealed chamber cover
- Disconnect electrode from ignition transformer
- Pull lead through grommet
- Remove electrode fixing screw
- Carefully remove electrode from burner
- Replace in reverse order.

6.3 IONISATION ELECTRODE

- Turn off power supply
- Remove boiler cover see 4.4
- Remove sealed chamber cover
- Disconnect electrode
- Remove electrode fixing screw
- Carefully remove electrode from burner
- Replace in reverse order.

6.4 MAIN BURNER

- Turn off power supply
- Isolate gas supply
- Remove boiler cover
- Remove sealed chamber cover
- Disconnect gas connection at injector
- Disconnect air sensing tube
- Disconnect two plugs to fan
- Remove ignition electrode 6.3
- Disconnect ionisation electrode
- Remove 4 x 10mm nuts securing burner to heat exchanger
- Carefully lift out burner assembly
- Refit in reverse order
- Test for gas tightness.

6.5 FAN ASSEMBLY

- Remove burner assembly as described in 6.4
- Remove 2 x 8mm bolts and loosen 2 x 8mm securing fan to burner assembly
- Remove restrictor plate and fit to new fan
- Refit in reverse order
- Recommission boiler
- Test for gas tightness.

6.6 MAIN HEAT EXCHANGER

- Turn off power supply
- Isolate gas supply
- Isolate flow and return valves
- Drain boiler using drain vent
- Remove burner assembly as described in 6.4
- Remove flue connection
- Disconnect flue sensor
- Disconnect limit stat
- Remove condensate drain connections
- Disconnect flow and return connections
- Remove two fixing brackets
- Lift out heat exchanger
- Refit in reverse order
- Recommission boiler
- Test for gas tightness.

6.7 FLUE SENSOR

- Turn off power supply
- Remove cover
- Remove sealed chamber cover
- Disconnect flue sensor
- Unscrew sensor
- Replace in reverse order.

6.8 100° SAFETY STAT

- Turn off power supply
- Remove cover
- Remove sealed chamber cover
- Disconnect 100° safety stat
- Remove fixing screws
- Refit in reverse order.

6.9 HEATING THERMISTOR (SM SENSOR)

- Turn off power supply
- Remove cover
- Isolate flow and return valves
- Drain boiler using drain vent
- Disconnect thermistor
- Unscrew thermistor (catch any water lost)
- Refit in reverse.

6.10 D.H.W. THERMISTOR (SS SENSOR)

- Turn off power supply
- Remove cover see 4.4
- Isolate cold water supply valve
- Open a D.H.W. tap
- Disconnect thermistor
- Unscrew thermistor (catch any water lost)
- Refit in reverse.

6.11 GAS VALVE (fig. 25)

- Turn off power supply
- Isolate gas supply
- Remove boiler cover see 4.4
- Disconnect wiring from gas valve
- Disconnect sensing tube
- Remove gas valve
- Refit in reverse order ensuring seals are replaced as required
- **This operation to be performed only when the gas valve is replaced or gas conversion.**

IMPORTANT: The working inlet gas pressure must not be less than 19mb.

Do **not** connect the analyser until required in these instructions:

1. If the heating system is hot, temporarily replace the sensor with a loose one.
2. Open the downstream test point (4 fig.25) and connect a digital manometer set on the mmH20 scale. Ensure the meter is zeroed.
3. Fully open the SHUTTER (5 fig.25) -turn anti clockwise
4. Press and hold the button for 10 seconds to enter "chimney sweep" will appear flashing on the display and the boiler runs at minimum power.
5. With the SHUTTER (5 fig.25) fully open, adjust the OFF-SET (6 fig.25) to obtain the first pressure value shown in Table 1 - OFF-SET column, ensure that the value is correct for the gas being used. If these figure are not obtainable (low), confirm that the working inlet gas pressure is correct.
6. Press the button, the boiler will increase to maximum power.
7. Close the SHUTTER (5 fig.25) to obtain the second pressure reading indicated in Table 1 – SHUTTER column.
8. Once these adjustments have been obtained, a flue gas analysis mustbe done. See section 4.2.2 of the installation manual for full details.
9. Press the button to return the boiler to minimum output.
10. Now connect the flue gas analyser.
11. Check the analyzer CO2/Ratio and compare to values reported in Table 1. Make any final adjustments by small adjustments to the OFF-SET screw (6 fig. 25), allow time for the analyser to respond to the adjustments.
12. Press the button, the boiler will move to maximum output . Verify that the CO2/Ratio. Make any final adjustments by small adjustments to the SHUTTER (5 fig.25) allow time for the analyser to respond.
13. Recheck the low reading by pressing the button.
14. Press the Standby key to exit.

15. Remove the manometer and analyser, close the test points, and check for tightness.
- Check for gas soundness.

6.12 PRINTED CIRCUIT BOARD (PCB)

- Isolate from power supply
- Remove screw securing control panel
- Lower panel to horizontal position
- Remove PCB covers
- Disconnect all wiring
- Remove PCB fixing screws
- Ensure any PCB links are matched to old board
- Reset PAR 1 and PAR 2 as per the table 3.3.1
- Refit in reverse order
- Recommission boiler.

6.13 PUMP MOTOR

- Isolate boiler
- Remove cover
- Isolate flow and return valves
- Drain boiler using drain vent
- Remove electrical lead from pump
- Remove 4 x fixing screws from pump housing catching any excess water
- Pull pump forward
- Refit in reverse order

6.14 DOMESTIC HOT WATER HEAT EXCHANGER

- Isolate boiler
- Remove cover
- Isolate flow and return
- Turn on D.H.W tap
- Close cold water supply isolation valve
- Drain boiler using drain vent
- Remove 2 x screws from RH and LH technil
- Remove plate heat exchanger catching any excess water
- Ensure that the four O rings are removed from the technil assembly
- Fit the new O rings supplied with new heat exchanger to the heat exchanger
- Refit in reverse order

6.15 MOTOR HEAD

- Isolate mains
- Remove cover
- Remove pin from valve head body
- Disconnect lead
- Lift motor upwards
- Refit in reverse order

6.15.1 DIVERTER VALVE CARTRIDGE

- isolate boiler
- remove cover
- isolate flow and return valves
- drain boiler using drain vent
- remove air inlet duct
- disconnect return pipe from pump housing
- unplug pump removing top cover
- remove 2x screws holding pump and pull forwards catching any excess water
- remove motor head as described in 6.15
- remove pin, lift cartridge housing upwards catching any excess water
- refit in reverse order ensure cartridge is locked in position

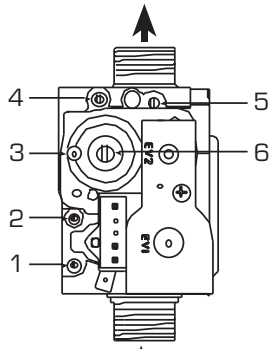

KEY
1 Upstream pressure intake
2 Intermediate pressure intake
3 Air signal inlet (VENT)
4 Downstream pressure intake
5 Capacity step
6 OFF-SET

TABLE 1

Gas	Model	Minimum output SHUTTER fully open Adjust OFF-SET mmH$_2$0	Maximum output OFF SET adjusted Adjust SHUTTER mmH$_2$0	CO2 % +/-0.3	Ratio Less than
Methane	12HE	4.8	53.0	9.0	0.004
	20HE	4.1	54.0	9.0	0.004
	25HE	4.5	81.6	9.0	0.004
	30HE	4.3	69.4	9.0	0.004
	35HE	6.3	88.7	9.0	0.004
	25/55HE	5.6	62.2	9.0	0.004
	30/55HE	6.6	77.5	9.0	0.004
LPG	12HE	24.5	53.0	10.0	0.004
	20HE	11.7	60.2	10.0	0.004
	25HE	10.9	91.8	10.0	0.004
	30HE	6.6	73.4	10.0	0.004
	35HE	8.6	102.0	10.0	0.004
	25/55HE	9.2	70.4	10.0	0.004
	30/55HE	9.7	85.7	10.0	0.004

Fig. 25

6.16 INTERNAL AUTO AIR VENT (AAV)

- Turn off power supply
- Isolate flow and return valves
- Remove boiler cover
- Drain boiler using drain vent
- Remove AAV
- Replace in reverse order.

6.17 SAFETY VALVE

- Turn off power supply
- Isolate flow and return valves
- Remove boiler cover
- Drain boiler using drain vent
- Disconnect pipe from safety valve
- Remove safety valve securing clip
- Remove safety valve, catch any water lost
- Refit in reverse.

6.18 DHW THERMISTOR (WHEN FITTED)

- Isolate boiler
- Remove cover
- Isolate cold inlet
- Open hot tap
- Remove clip
- Pull upwards and remove, catching excess water
- Refit in reverse order

6.19 WATER PRESSURE TRANSDUCER

- Isolate boiler
- Remove cover
- Isolate cold inlet
- Open hot tap
- Remove clip
- Pull upwards and remove, catching excess water
- Refit in reverse order

6.20 DHW FLOW SENSOR

- Isolate boiler
- Remove cover
- Remove cable from flow sensor and pull forward
- Lift flow sensor blue clip pull forward
- Refit in reverse order

7 EXPLODED VIEWS

8114368 Murelle ELITE HE 35T ErP

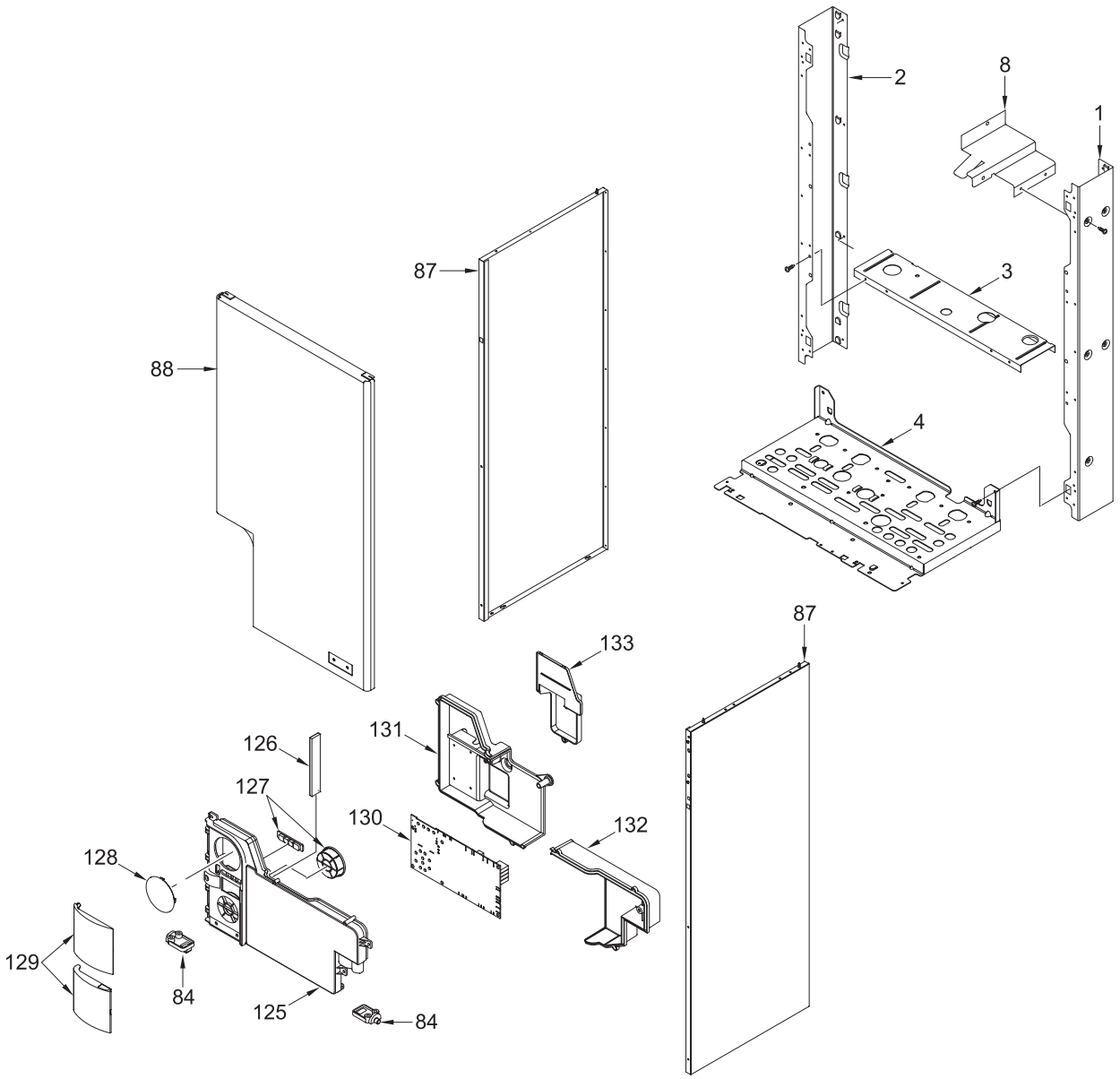

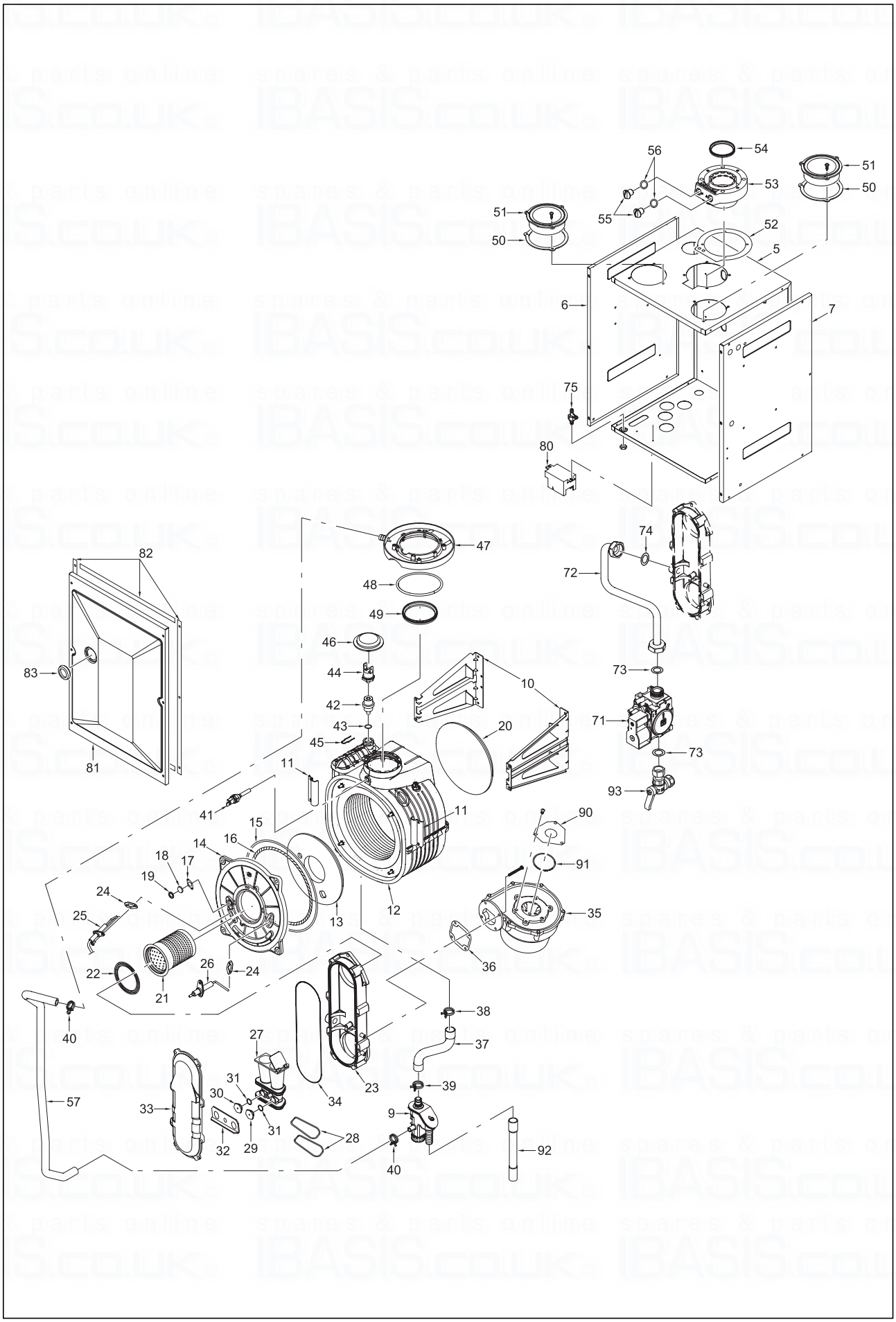

56
54
51
53
50
51
55
52
50
5
6
7
75
80
74
47
72
82
48
49
46
73
83
44
10
42
71
43
20
45
73
81
11
93
41
11
90
15
16
14
91
18
17
19
24
12
35
25
13
36
22
26
24
21
38
40
27
37
31
23
39
30
34
57
33
9
31
28
32
29
92
40

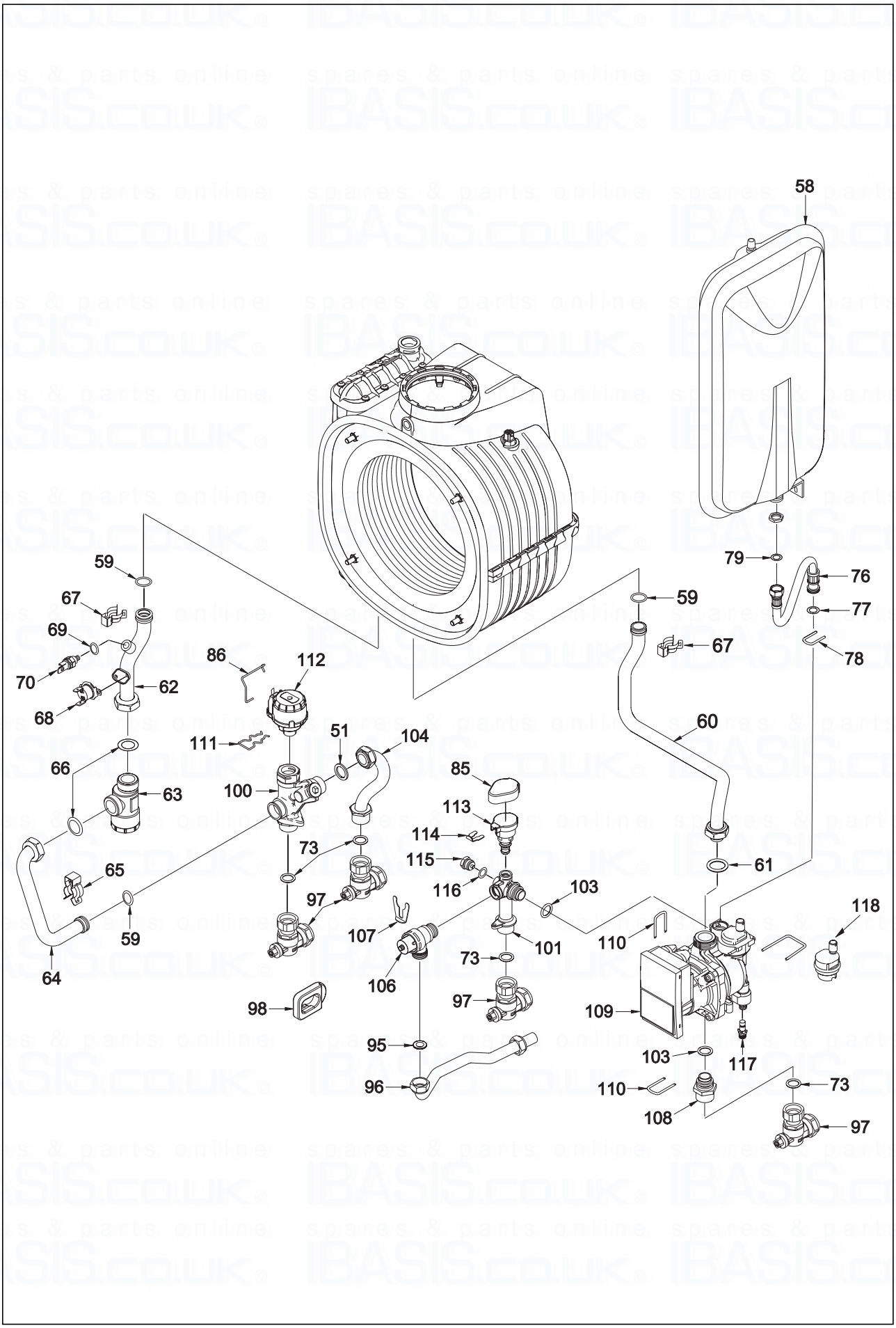
58
59
67
69
70
68
62
66
63
65
59
64
86
112
111
51
104
100
73
97
107
106
98
95
96
85
113
114
115
116
103
101
73
97
59
67
60
61
79
76
77
78
110
109
103
117
110
108
118
73
97

POS.	CODE	DESCRIPTION		
1	6138533	Right hand side frame part		
2	6138632	Left hand side frame part		
3	6255431	Expansion vessel lower support		
4	6318070	Frame assembly lower side		
5	6266074	Sealed chamber rear panel		
6	6266152	Sealed chamber left hand side panel		
7	6266153	Sealed chamber right hand side panel		
8	6189589	Expansion vessel fixing bracket		
9	6277205	Water trap		
10	6010831	Main exchanger supporting bracket		
11	6010829	Main exchanger fixing bracket		
12	6278910	Main exchanger body		
13	6269008	Main exchanger door insulation		
14	5188360	Main exchanger door		
15	6248870	Combustion chamber O-ring		
16	6248871	Glass fibre sealing cord		
17	6311810	Glass fixing flange		
18	6020103	Sight glass		
19	6248872	Sight glass gasket		
20	6281545	Replacement rear insulat. kit		
21	6278357	Burner		
22	6174823	Gasket for burner flange		
23	6278813	Air-gas hose lower side		
24	6174809	Gasket for ignition electrode		
25	6221632	Ignition electrode		
26	6221623	Ionisation electrode		
27	6274371	Mixer		
28	6226470	ORing 52,07 x 2,62		
29	6322303	Round nozzle ø 3,50	MET	
30	6322353	Hexagonal nozzle ø 4,00	MET	
31	6226403	O-ring 2031		
32	6267119	Nozzle locking bracket		
33	6278812	Air-gas hose upper side		
34	6226465	O-ring ø 183,83x2,62		
35	6261405	Fan		
36	6174816	Gasket for fan flange		
37	6034155	Condensate drainage pipe		
38	2051123	Clamp diam. 24,2		
39	2051122	Clamp diam. 22,1		
40	2051120	Clamp diam. 17,3		
41	6277130	Probe NTC D.4X40		
42	6112330	Bush thermostatic		
43	6226464	O-ring 115 diam. 11,91x2,62		
44	6146728	Limit stat auto reset 80°C		
45	6226624	Spring air vent knob		
46	6226754	Rubber plug		
47	6288010	Size pick up condensate		
48	6226451	O-Ring type		

49	6248828	Air inlet gasket ø80		
50	6028707	Air intake gasket		
51	6288000	Air intake		
52	6028710	Air/smoke manifold gasket		
53	6287912	Air/smoke manifold		
54	6248817	Lip seal for ø 60 pipe		
55	6147409	Air/smoke manifold plug M14x1.5		
56	6226417	O-ring 3043		
57	1010215	Rubber pipe dia. 15x2,5		
58	5183722	Rectang. expansion vessel 10 l.		
59	6226412	O-ring 3068		
60	6227461	C.H. return pipe		
61	2030257	Gasket diam. 30x22x3		
62	6277721	Pipe connect. exchanger-C.H filter		
63	6295501	C.H. filter 3/4”M x 3/4”M		
64	6277794	Pipe connect. C.H. filter-C.H. flow		
65	6226601	Spring for heat exchanger connection		
66	2030252	Piracriten gasket ø 16x24,5x2		
67	6226619	Spring for heat exchanger connection		
68	6146701	100°C safety stat		
69	6022010	Sensor gasket		
70	6231351	Plunged sensor		
71	6243823	Gas valve type		
72	6277448	Pipe connecting gas valve-mixer		
73	2030228	Gasket ø 17x24x2		
74	2030255	Gasket ø 12,5x18,5x3		
75	6280590	Three way fitting + cap kit		
76	6017405	Flexible pipe M.F. 3/8” L=300		
77	6226476	ORing diam.15x2		
78	6226643	Pipe fixing spring		
79	2030226	Gasket ø 10,2x14,8x2		
80	6098315	Ignition transformer		
81	6288314	Sealed chamber front panel		
82	5192200	Gasket for sealed chamber		
83	6001210	Peephole		
84	6302000	Plastic pin		
85	6319650	Bitron transducer cap		
86	6226638	Divertor valve motor spring clip		
87	6304430	casing left/right side panel		
88	6304231	Casing front panel		
92	6034166	Condensate drainage rubber pipe		
93	6177530	Gas cock 3/4” F x 15		
95	2030227	Gasket ø 12x18x2		
96	6157648	Pressure relief valve drain pipe		
97	6177505	Ball cock 3/4” x 22		
98	6275910	Pressure relief valve operation lever		
100	6265890	Flowing to C.H. system manifold		

101	6265880	C.H. return manifold		
103	6226475	ORing diam.18,64x3,53		
104	6265022	D.H.W. storage tank flow pipe		
106	6040225	Pressure relief valve 1/2” 3 bar		
107	6226645	Spring clip		
108	6120560	Pump nipple 3/4”		
109	6272360	Circulating pump		
110	6226644	Spring clip for rotating connection		
111	6226636	D.H.W. elektrovalve fix.spring		
112	6087332	Motor for Honeywell diverting valve		
113	6273608	Water pressure transducer		
114	6226631	Spring		
115	6147401	Plug 1/4”		
116	2030225	Gasket ø 5,5x11x2		
117	6319643	Discharger cock		
118	6013182	Automatic air vent		
125	6304700	Control panel		
126	6305160	Guidelight with led		
127	6305120	Kit Rubber button		
128	6247327	Cap for time programmer		
129	6304890	Flap door assembly		
130	6301416	Main PCB		
131	6305000	Cover		
132	6305010	connection cover		
133	6305020	Time programmer cover		
	6281534	Gaskets kit		
	6319695	Murelle-Format-.....o-ring kit		
	6211794	Peephole kit		
	5202700	Hydraulic group DIN		
	6231331	D.H.W. tank sensor		
	5197178	Complete control panel		
	6186587	Ionisation electrode cable		
	5185140	Conversion kit to LPG		
	6316213	3 pole cable connector CN14		
	6316280	4 pole cable connector CN12		
	6319146	5+4 pole cable connector		
	6319145	9 pole female cable connector		
	6316200	Connector 2 poli		
	6316274	4 pole cable connector CN9		
	6323816	14 pole female cable connector		
	6316202	Connector 4 poli		
	6316203	Connector 4 poli CN4		
	6316204	Connector 8 poli CN7		
	6316259	5 pole cable connector		

Products reference: 8114368
Check the correspondence with the boiler data plate.

8114312-8114314 Murelle ELITE HE 30-35 ErP

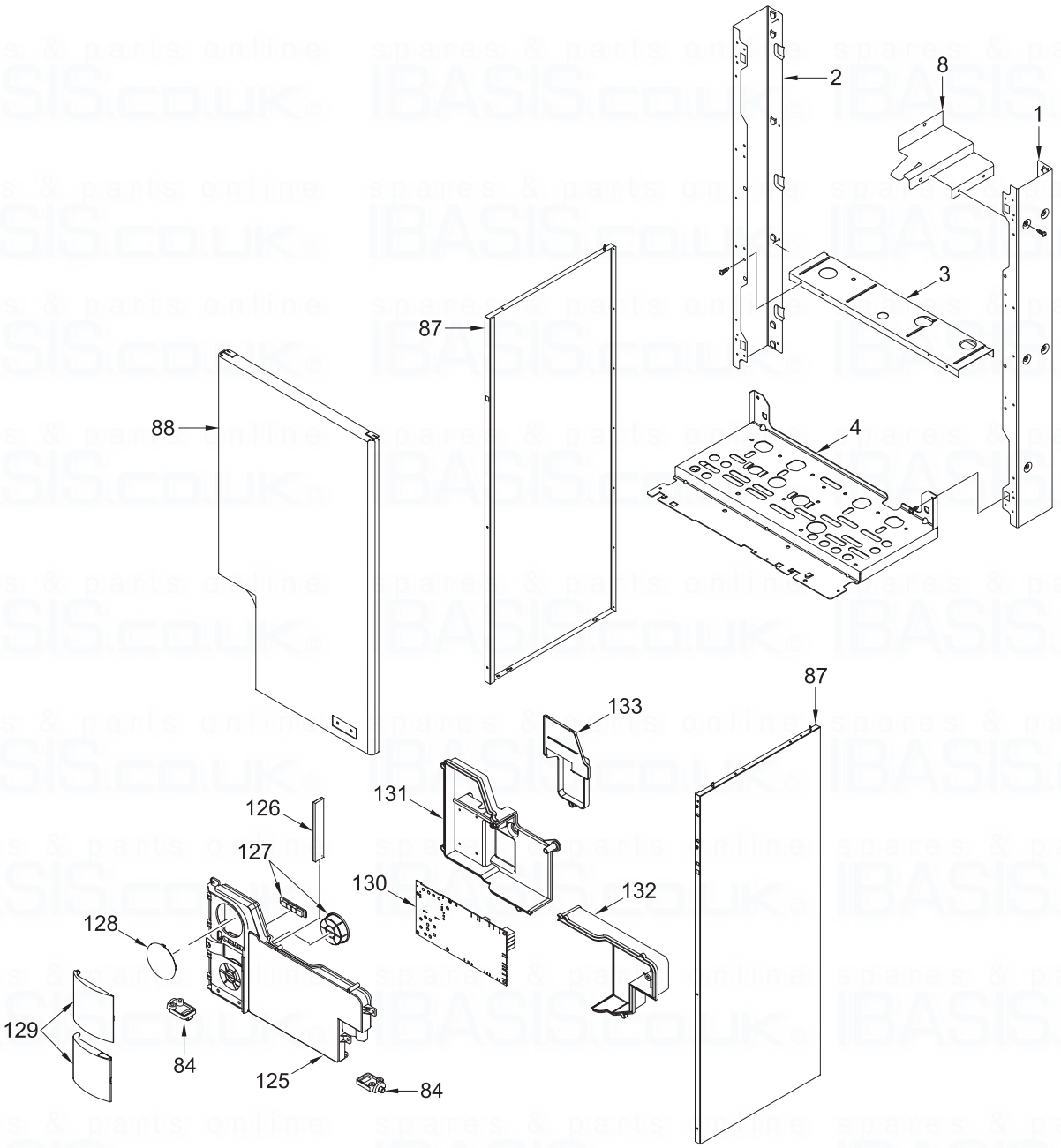

spares & parts online IBASIS.CO.UK

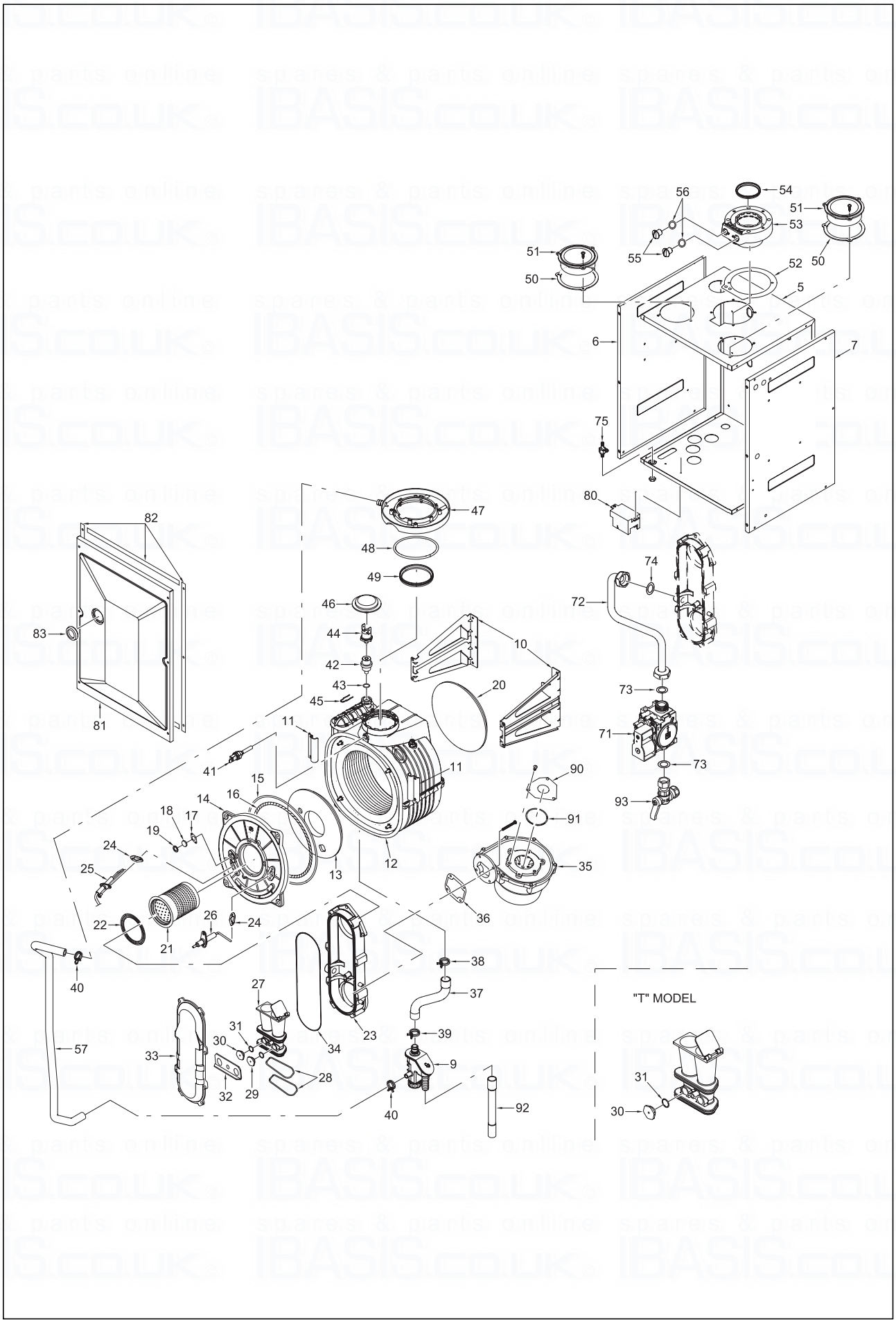
"T" MODEL

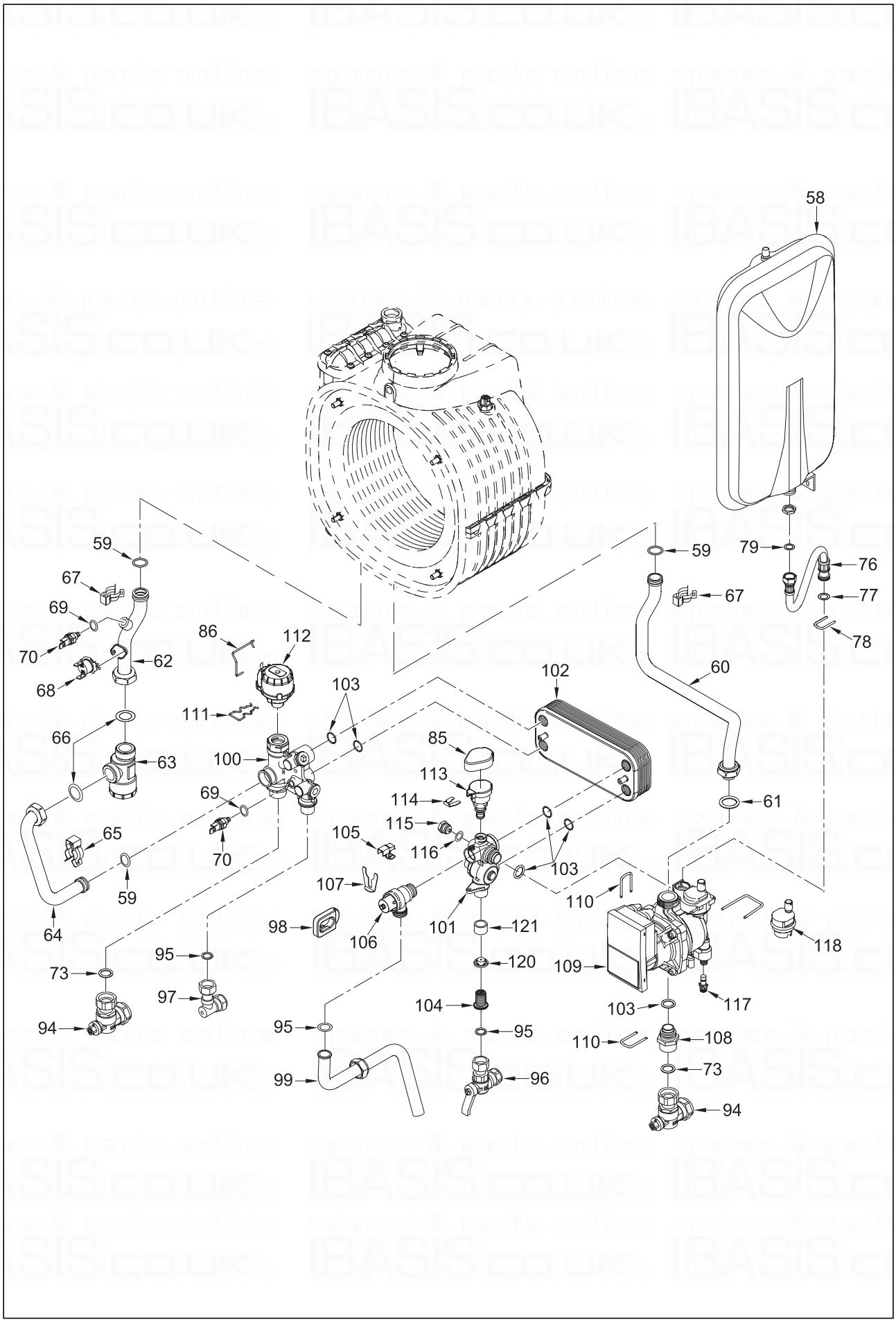
58
59
67
69
70
62
68
66
63
65
59
64
86
112
111
103
100
69
70
102
85
113
114
115
116
105
107
106
98
101
121
120
104
95
96
99
95
97
73
94
59
79
76
77
78
67
60
61
103
110
109
118
117
103
110
108
73
94

POS.		CODE	DESCRIPTION	MODEL
1		6138533	Right hand side frame part	
2		6138632	Left hand side frame part	
3		6255431	Expansion vessel lower support	
4		6318070	Frame assembly lower side	
5		6266074	Sealed chamber rear panel	
6		6266152	Sealed chamber left hand side panel	
7		6266153	Sealed chamber right hand side panel	
8		6189589	Expansion vessel fixing bracket	
9		6277205	Water trap	
10				
10A		6010833	Main exchanger supporting bracket	30
10B		6010831	Main exchanger supporting bracket	35
11		6010829	Main exchanger fixing bracket	
12				
12A		6278912	Main exchanger body	30
12B		6278910	Main exchanger body	35
13		6269008	Main exchanger door insulation	
14		5188360	Main exchanger door	
15		6248870	Combustion chamber O-ring	
16		6248871	Glass fibre sealing cord	
17		6311810	Glass fixing flange	
18		6020103	Sight glass	
19		6248872	Sight glass gasket	
20		6281545	Replacement rear insulat. kit	
21		6278359	Premix burner	30
21A		6278357	Burner	35
22		6174823	Gasket for burner flange	
23		6278813	Air-gas hose lower side	
24		6174809	Gasket for ignition electrode	
25		6221632	Ignition electrode	
26		6221623	Ionisation electrode	
27				
27A		6274370	Mixer	30
27B		6274371	Mixer	35
28		6226470	ORing 52,07 x 2,62	
29				
29A		6322300	Round nozzle Ø 2,80	MET - 30
29B		6322303	Round nozzle Ø 3,50	MET - 35
30				
30A		6322350	Hexagonal nozzle Ø 3,80	MET - 30
30B		6322353	Hexagonal nozzle Ø 4,00	MET - 35
31		6226403	O-ring 2031	
32		6267119	Nozzle locking bracket	

33		6278812	Air-gas hose upper side	
34		6226465	O-ring Ø 183,83x2,62	
35		6261412	Fan	30
35A		6261405	Fan	35
36		6174816	Gasket for fan flange	
37		6034155	Condensate drainage pipe	
38		2051123	Clamp diam. 24,2	
39		2051122	Clamp diam. 22,1	
40		2051120	Clamp diam. 17,3	
41		6277130	Probe NTC D.4X40	
42		6112330	Bush thermostatic	
43		6226464	O-ring 115 diam. 11,91x2,62	
44		6146728	Limit stat auto reset 80øC	
45		6226624	Spring air vent knob	
46		6226754	Rubber plug	
47		6288010	Size pick up condensate	
48		6226451	O-Ring type	
49		6248828	Air inlet gasket Ø80	
50		6028707	Air intake gasket	
51		6288000	Air intake	
52		6028710	Air/smoke manifold gasket	
53		6287912	Air/smoke manifold	
54		6248817	Lip seal for Ø 60 pipe	
55		6147409	Air/smoke manifold plug M14x1.5	
56		6226417	O-ring 3043	
57		1010215	Rubber pipe dia. 15x2,5	
58				
58A		5183722	Rectang. expansion vessel 10 l.	30-35
59		6226412	O-ring 3068	
60		6227461	C.H. return pipe	
61		2030257	Gasket diam. 30x22x3	
62		6277723	Pipe connect. exchanger-C.H filter	30
62A		6277721	Pipe connect. exchanger-C.H filter	35
63		6295501	C.H. filter 3/4”M x 3/4”M	
64		6277794	Pipe connect. C.H. filter-C.H. flow	
65		6226601	Spring for heat exchanger connection	
66		2030252	Piracriten gasket Ø 16x24,5x2	
67		6226619	Spring for heat exchanger connection	
68		6146701	100°C safety stat	
69		6022010	Sensor gasket	
70		6231351	Plunged sensor	
71		6243823	Gas valve type	
72				
72A		6277447	Pipe connecting gas valve-mixer	30
72B		6277448	Pipe connecting gas valve-mixer	35

73		2030228	Gasket Ø 17x24x2	
74		2030255	Gasket Ø 12,5x18,5x3	
75		6280590	Three way fitting + cap kit	
76		6017405	Flexible pipe M.F. 3/8” L=300	
77		6226476	ORing diam.15x2	
78		6226643	Pipe fixing spring	
79		2030226	Gasket Ø 10,2x14,8x2	
80		6098315	Ignition transformer	
81		6288314	Sealed chamber front panel	
82		5192200	Gasket for sealed chamber	
83		6001210	Peephole	
84		6302000	Plastic pin	
85		6319650	Bitron transducer cap	
86		6226638	Divertor valve motor spring clip	
87		6304430	casing left/right side panel	
88		6304231	Casing front panel	
90		6028646	Air diaphragm	30
91		6226410	O-Ring Ø 63 x 3	30
92		6034166	Condensate drainage rubber pipe	
93		6177530	Gas cock 3/4” F x 15	
94		6177505	Ball cock 3/4” x 22	
95		2030227	Gasket Ø 12x18x2	
96		6177506	Ball cock 1/2” x 15	
97		6142330	Quarter bend 1/2” x 15	
98		6275910	Pressure relief valve operation lever	
99		6157652	Pressure relief valve drain pipe	
100		6265871	C.H. flow manifold	
101		6265830	C.H. return manifold	
102				
102A		6265657	14 plate-type heat exchanger	30
102B		6265658	16 plate-type heat exchanger	35
103		6226475	ORing diam.18,64x3,53	
104		6222003	D.H.W. filter	
105		6131440	Flowmeter sensor	
106		6040211	Pressure relief valve 3 bar	
107		6226626	Pipe fixing spring	
108		6120560	Pump nipple 3/4”	
109		6272360	Circulating pump	
110		6226644	Spring clip for rotating connection	
111		6226636	D.H.W. elektrovalve fix.spring	
112		6087332	Motor for Honeywell diverting valve	
113		6273608	Water pressure transducer	
114		6226631	Spring	
115		6147401	Plug 1/4”	
116		2030225	Gasket Ø 5,5x11x2	

117		6319643	Discharger cock	
118		6013182	Automatic air vent	
120				
120A		6281431	14 l/min. flow control	30
120B		6281432	16 l/min. flow control	35
121		6175180	Flow control spacer	
125		6304700	Control panel	
126		6305160	Guidelight with led	
127		6305120	Kit Rubber button	
128		6247327	Cap for time programmer	
129		6304890	Flap door assembly	
130		6301416	Main PCB	
131		6305000	Cover	
132		6305010	connection cover	
133		6305020	Time programmer cover	
		6281534	Gaskets kit	
		6319695	Murelle-Format-.....o-ring kit	
		6211794	Peephole kit	
		5197106	Complete control panel	
		6186587	Ionisation electrode cable	
		6316213	3 pole cable connector CN14	
		6316280	4 pole cable connector CN12	
		6319146	5+4 pole cable connector	
		6319145	9 pole female cable connector	
		6316295	4 pole cable connector	
		6323885	14 pole cable connector	
		6316202	Connector 4 poli	
		6316203	Connector 4 poli CN4	
		6316204	Connector 8 poli CN7	
		520261	Hydraulic group DIN	30
		5185139	Conversion kit to LPG	30
		6316259	5 pole cable connector	35
		5202612	Hydraulic group DIN	35
		5185140	Conversion kit to LPG	35

Products reference : 8114312 - 8114314
Check the correspondence with the boiler data plate.

8 APPENDIX 1

INDUSTRY GUIDANCE FOR INSTALLERS ON CONDENSATE

DRAINAGE PIPE INSTALLATION

This guidance is endorsed by HHIC members.

1. BACKGROUND

During recent winters the UK has experienced prolonged spells of extremely cold weather - down to minus 20°C and below in many areas. This resulted in a significant increase in the number of calls to boiler manufacturers and heating engineers from householders with condensing (high efficiency) boilers where the condensate drainage pipe had frozen and become blocked with ice, causing the boiler to shut down. In the vast majority of cases such problems occur where the condensate drainage pipe is located externally to the building for some part of its length.

British Standards, Building Regulations etc. currently allow condensate drainage pipes to be run either internally or externally, or a combination of these. These documents give guidance on how to install the pipes in order to reduce the possibility of freezing. However this guidance may not be sufficient to prevent freezing in extreme conditions - with widespread and prolonged very low temperatures.

In view of the possibility that UK weather patterns will show more "extremes" in future due to the effects of global climate change, the following guidance updates previous recommendations on condensate drainage pipe installation. All other technical requirements for condensate drain installation given in British Standard BS 6798:2009, or in boiler manufacturers' installation instructions should still be followed.

2. REVISED GUIDANCE ON CONDENSATE DRAINAGE PIPE INSTALLATION

Where a new or replacement boiler is being installed, access to an internal "gravity discharge" termination should be one of the main factors considered when determining potential boiler locations, so that the condensate drainage pipe can be terminated as recommended below. On an existing installation, the guidance below should also be followed if work is carried out to "upgrade" the condensate drain age system to reduce the risk of freezing in extreme conditions.

Internal condensate drainage pipework must be a minimum of 19mm ID (typically 22mm OD) plastic pipe and this should "fall" at least 45 mm per metre *away* from the boiler, taking the shortest practicable route to the termination point.

In order to minimise the risk of freezing during prolonged very cold spells, one of the following methods of terminating condensate drainage pipe should be adopted -

2.1 INTERNAL TERMINATION:

Wherever possible, the condensate drainage pipe should be terminated at a suitable internal foul water discharge point such as (a) an internal soil and vent stack or (b) an internal kitchen or bathroom waste pipe, washing machine waste pipe etc. A suitable permanent connection to the foul waste pipe should be used. Figures 1, 2(a), 2(b) show appropriate connection methods.

The possibility of waste pipes freezing downstream of the connection point should be considered when determining a suitable connection point - e.g. a slightly longer pipe run to an internal soil stack may be preferable to a shorter run connecting into a kitchen waste pipe discharging directly through the wall to an external drain.

Where "gravity discharge" to an internal termination is not physically possible (e.g. the discharge point is above the appliance location, or access is obstructed by a doorway), or where very long internal pipe runs would be required to reach a suitable discharge point, the following measures may be adopted -

2.2 USE OF A CONDENSATE PUMP (TO AN INTERNAL TERMINATION):

Condensate can be removed using a proprietary condensate pump, of a specification recommended by the boiler or pump manufacturer.

The pump outlet should discharge to a suitable internal foul water discharge point, such as (a) an internal soil and vent stack or (b) an internal kitchen or bathroom waste pipe, washing machine waste pipe etc. Figure 3 shows a typical connection method.

A suitable permanent connection to the foul waste pipe should be used and the manufacturer's detailed installation instructions for the pump should be followed.

2.3 EXTERNAL TERMINATION:

The use of an externally-run condensate drainage pipe, terminating at a suitable foul water discharge point or purpose-designed soakaway, may be also be considered; however if this termination method is chosen then the following measures should be adopted -

The pipe should be run internally as far as possible before going externally and the pipe diameter should be increased to a minimum of 30mm ID (typically 32mm OD) before it passes through the wall.

The external run should be kept as short as possible, taking the most direct and "most vertical" route possible to the discharge point, with no horizontal sections in which condensate might collect.

The external pipe should be insulated using suitable waterproof and weatherproof insulation ("Class O" pipe insulation is suitable for this purpose) .

The use of fittings, elbows etc should be kept to a minimum and any internal "burrs" on cut pipework should be removed so that the internal pipe section is as smooth as possible.

The customer/householder should be advised that even with the above measures this type of installation could freeze, and that if this were to occur then boiler shutdown could result, requiring remedial action - possibly involving a chargeable engineer call-out.

Where there are likely to be extremes of temperature or wind-chill, the use of a proprietary trace-heating system for external condensate drainage pipework, incorporating an external frost thermostat, should therefore be considered. If such a system is used then the installation instructions of the trace heating manufacturer and any specific recommendations regarding pipe diameter, insulation, etc. should be followed. All other relevant guidance on condensate drainage pipe installation should also be followed.

Other cold weather protection methods approved or endorsed by boiler manufacturers and/or service organisations may be adopted if these are considered suitable by the parties involved.

If an external soil/vent stack is used as the external termination then the connection method shown in Figure 4 should be used, together with the measures on insulation etc. as described above and shown in the diagram.

When a rain water downpipe is used as the termination (***NB*** *only permissible if this downpipe passes to a combined foul and rainwater drainage system*) an air break must be installed between the condensate drainage pipe and the downpipe to avoid reverse flow of rainwater into the boiler should the downpipe itself become flooded or frozen. Figure 5 shows a suitable connection method.

Where the condensate drainage pipe is terminated over an open foul drain or gully, the pipe should terminate below the grating level, but above water level, in order to minimise "wind chill" at the open end. Pipe drainage will be improved if the end is cut at 45° as opposed to a straight cut. The use of a drain cover (such as those used to prevent blockage by leaves) may offer further protection from wind chill. Figure 6 shows a suitable connection method.

Where the condensate drain pipe terminates in a purpose-designed soakaway (see BS 6798:2009 or boiler installation manual for soakaway design requirements) any above-ground section of condensate drainage pipe should be run and insulated as described above. Figure 7 shows a suitable connection method.

3. UNHEATED INTERNAL AREAS:

Internal condensate drainage pipes run in unheated areas such as lofts, basements and garages should be treated as external pipe.

NOTES

The Benchmark Commissioning Checklist should be completed as required to record details of the condensate drainage pipe installation.

Where an external condensate drainage pipe is installed, the customer should be made aware of the risks and consequences of its freezing and offered the option to fit trace heating (or other measures approved by the boiler manufacturer or service organisation).

Separate guidance has been published for householders on remedial actions which can be taken if a condensate drainage pipe freezes. This may result in requests for alteration to condensate drainage pipework, in which case the guidance above should be followed.

In some instances (e.g. where an elderly person's heating needs to be reinstated as an emergency measure) condensate drainage pipes may have been cut in order to bypass any blockage and allow re-ignition of the boiler, with condensate being collected in a suitable container as a temporary solution.

While not unsafe, this is not recommended practice and if such action has been taken then the condensate drainage pipe must be reinstated as soon as possible, using the above guidance to reduce risk of freezing in future.

Figure 1 – Connection of condensate drainage pipe to internal soil and vent stack

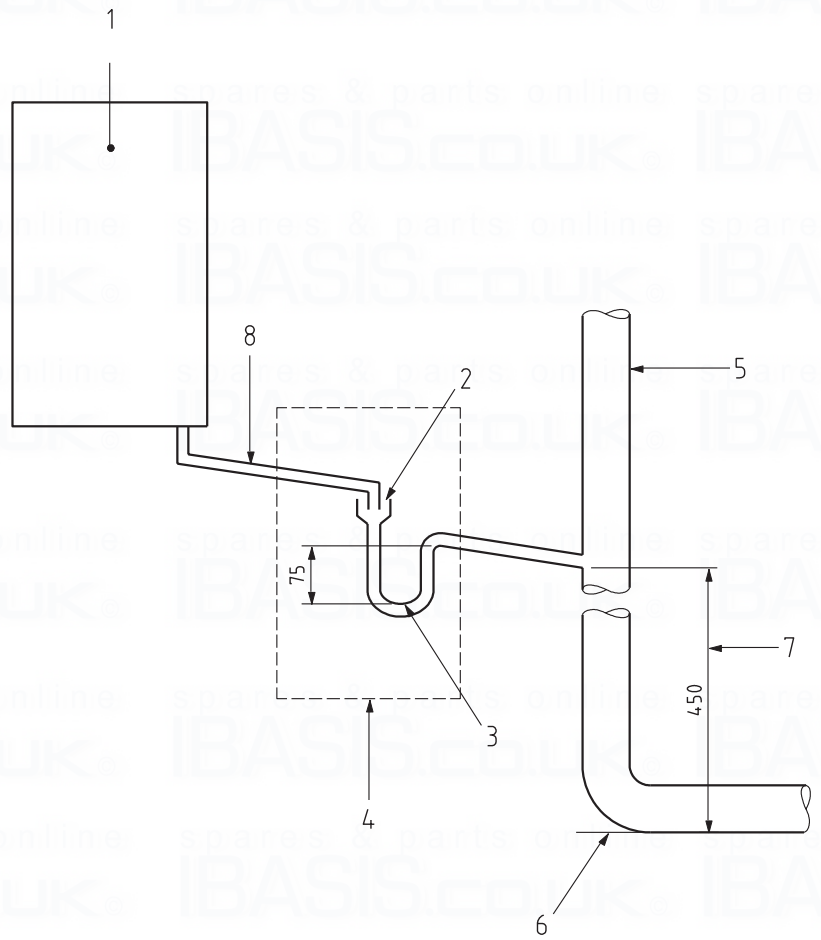

Key

1 Boiler
2 Visible air break
3 75 mm trap
4 Visible air break and trap not required if there is a trap with a minimum condensate seal of 75 mm incorporated into the boiler
5 Soil and vent stack
6 Invert
7 450 mm minimum up to three storeys
8 Minimum internal diameter 19 mm

Figure 2(a) – Connection of a condensate drainage pipe downstream of a sink, basin, bath or shower waste trap

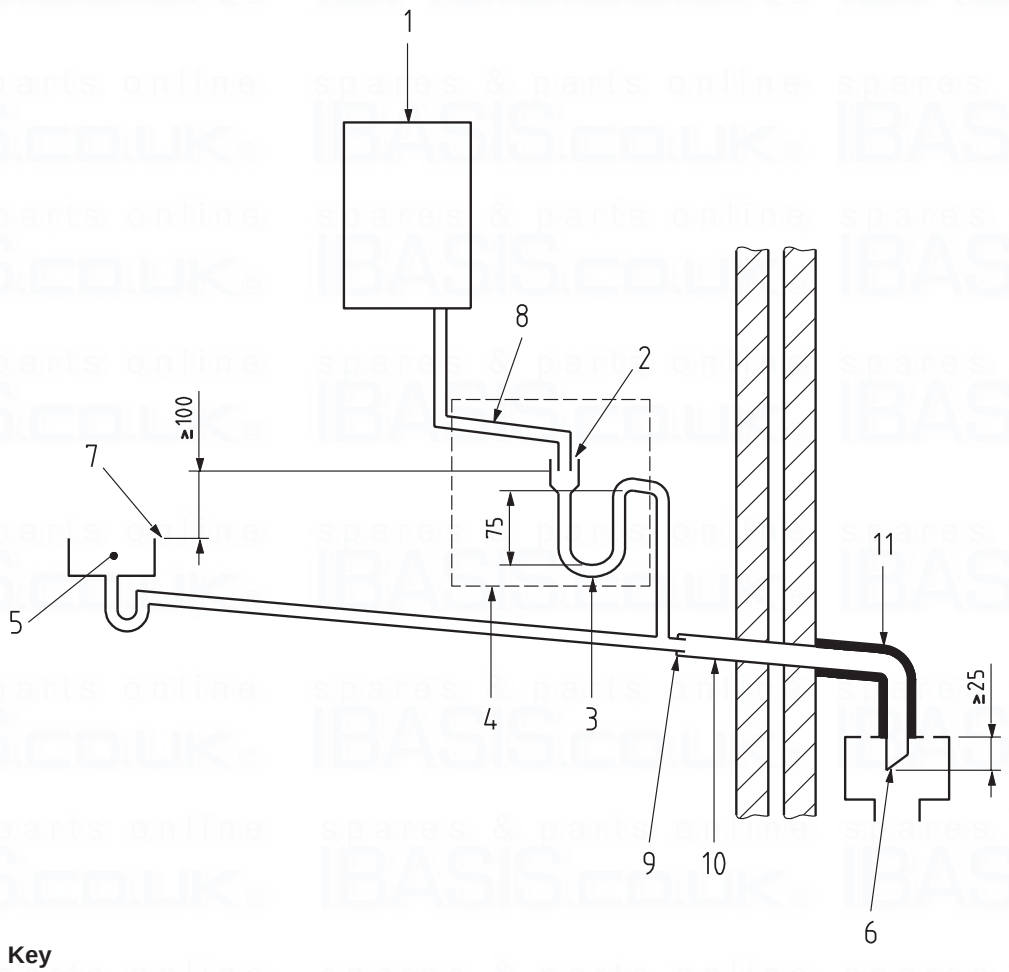

Key

1 Boiler
2 Visible air break
3 75 mm trap
4 Visible air break and trap not required if there is a trap with a minimum condensate seal of 75 mm incorporated into the boiler. In this case the 100 mm is measured to the trap in the boiler.
5 Sink, basin, bath or shower
6 Open end of condensate drainage pipe direct into gully 25 mm min below grating but above water level; end cut at 45 °
7 Sink lip
8 Minimum internal diameter 19 mm
9 Pipe size transition
10 Minimum internal diameter 30 mm
11 Water/weather proof insulation

Figure 2(b) – Connection of a condensate drainage pipe upstream of a sink, basin, bath or shower waste trap

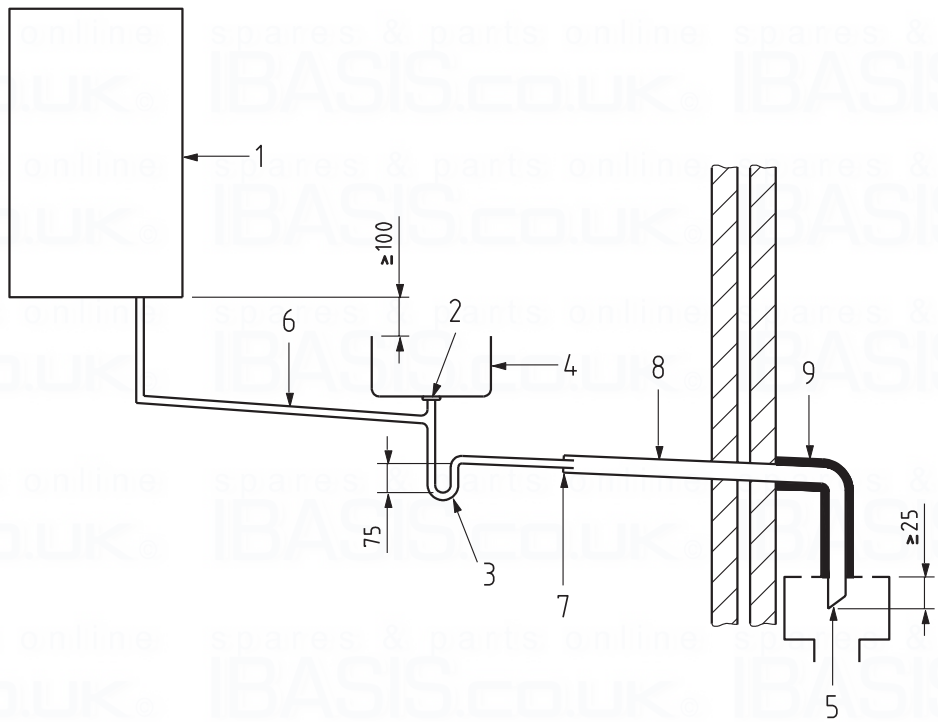

Key

1	Boiler
2	Visible air break at plug-hole
3	75 mm sink, basin, bath or shower waste trap
4	Sink, basin, bath or shower with integral overflow
5	Open end of condensate drainage pipe direct into gully 25 mm min below grating but above water level; end cut at 45 °
6	Minimum internal diameter 19 mm
7	Pipe size transition
8	Minimum internal diameter 30 mm
9	Water/weather proof insulation

Figure 3 – Connection of a condensate pump - typical method (NB manufacturer's detailed instructions should be followed).

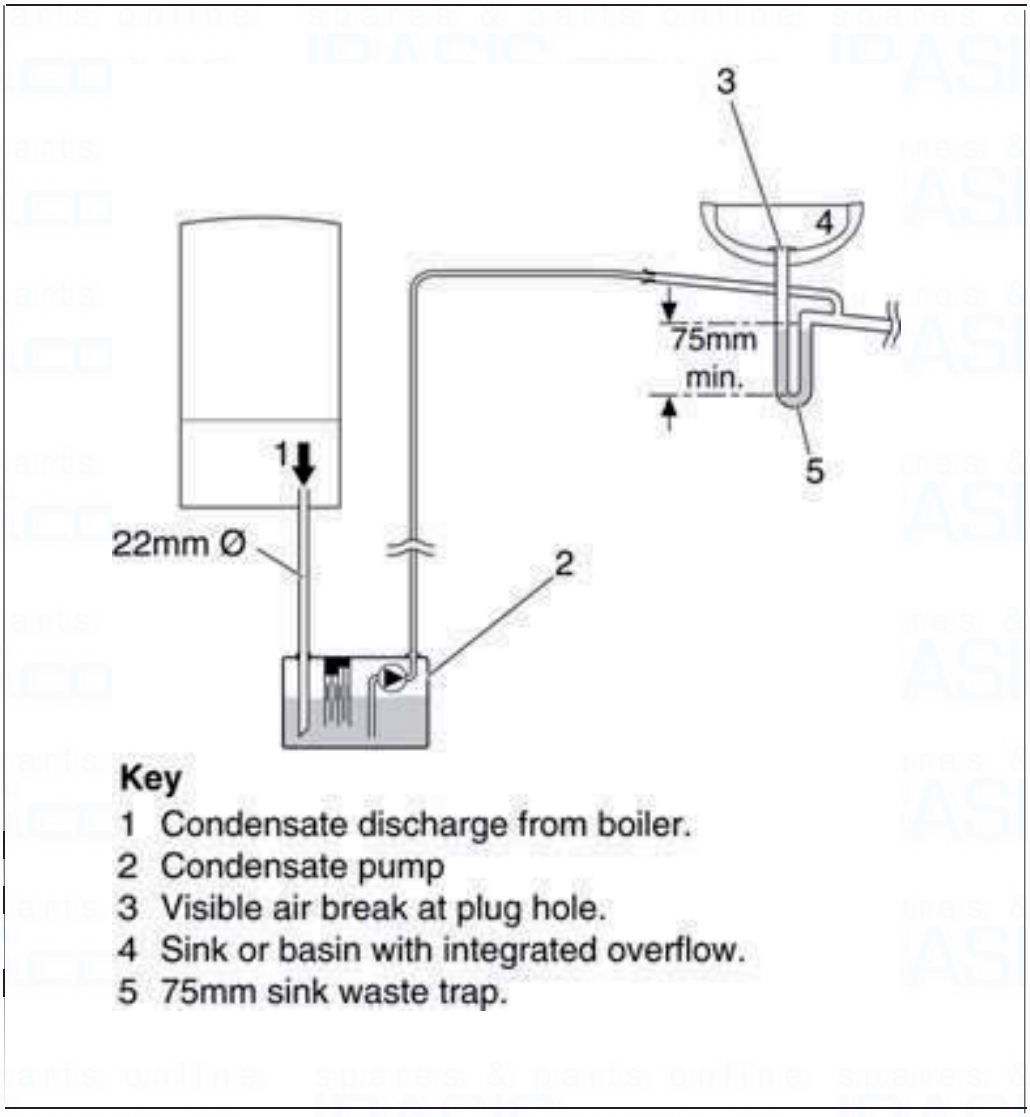

Figure 4 – Connection of condensate drainage pipe to external soil and vent stack

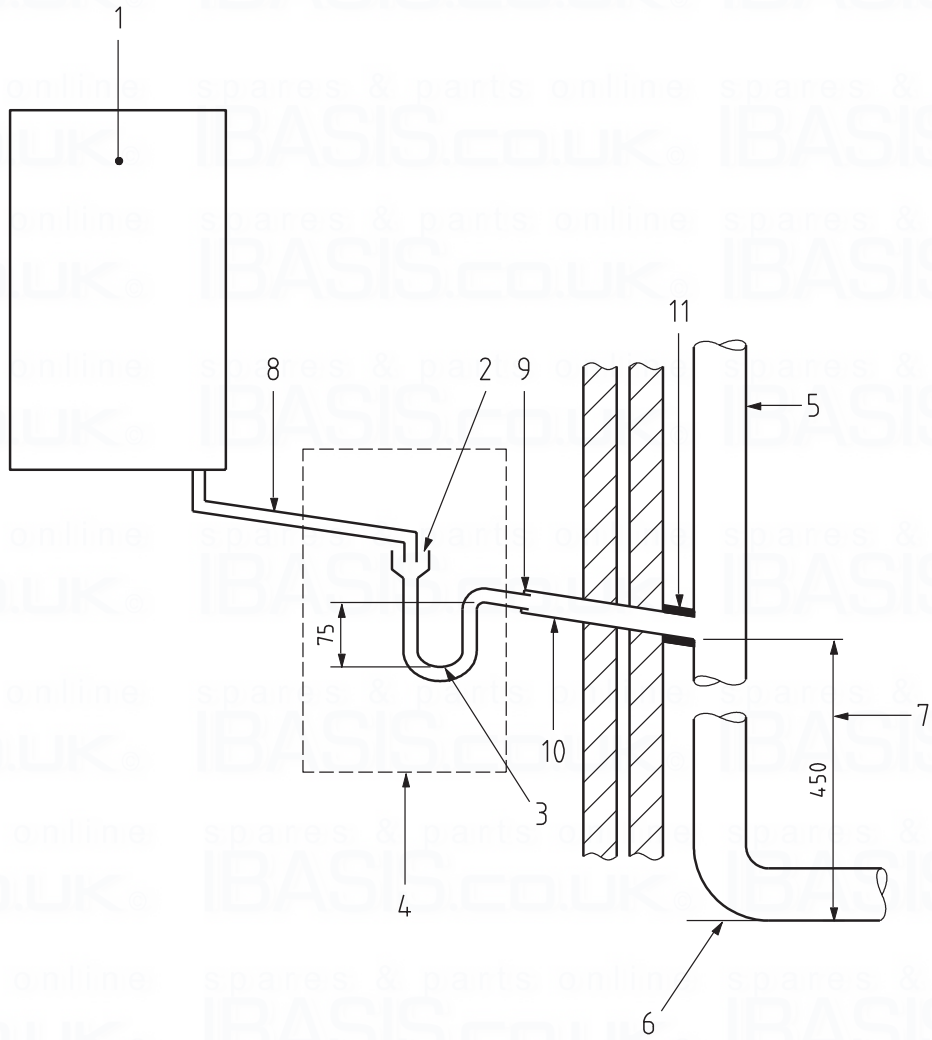

Key

1	Boiler	7	450 mm minimum up to three storeys
2	Visible air break	8	Minimum internal diameter 19 mm
3	75 mm trap	9	Pipe size transition point
4	Visible air break and trap not required if there is a trap with a minimum condensate seal of 75 mm incorporated into the boiler.	10	Minimum internal diameter 30 mm
		11	Water/weather proof insulation
5	Soil and vent stack		
6	Invert		

Figure 5 – External termination to rainwater downpipe (NB only combined foul/rainwater drain)

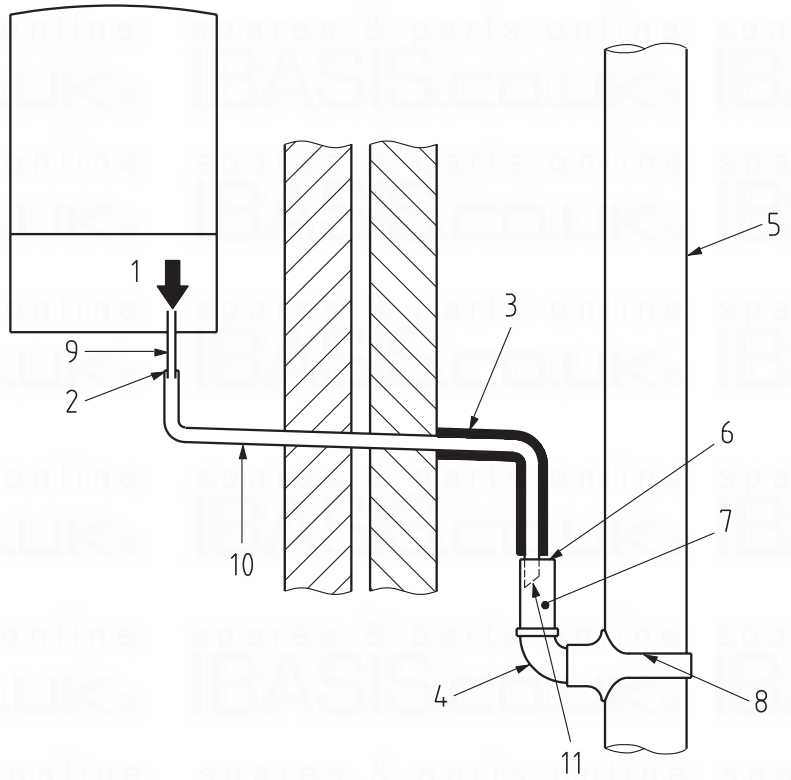

Key

1	Condensate discharge pipe from boiler	7	Air gap
2	Pipe size transition point	8	68 mm Ø PVCu strap-on fitting
3	Water/weather proof insulation	9	Minimum internal diameter 19 mm
4	43 mm 90° male/female bend	10	Minimum internal diameter 30 mm
5	External rain water pipe into foul water	11	End cut at 45 °
6	External air break		

Figure 6 – External drain, gully or rainwater hopper

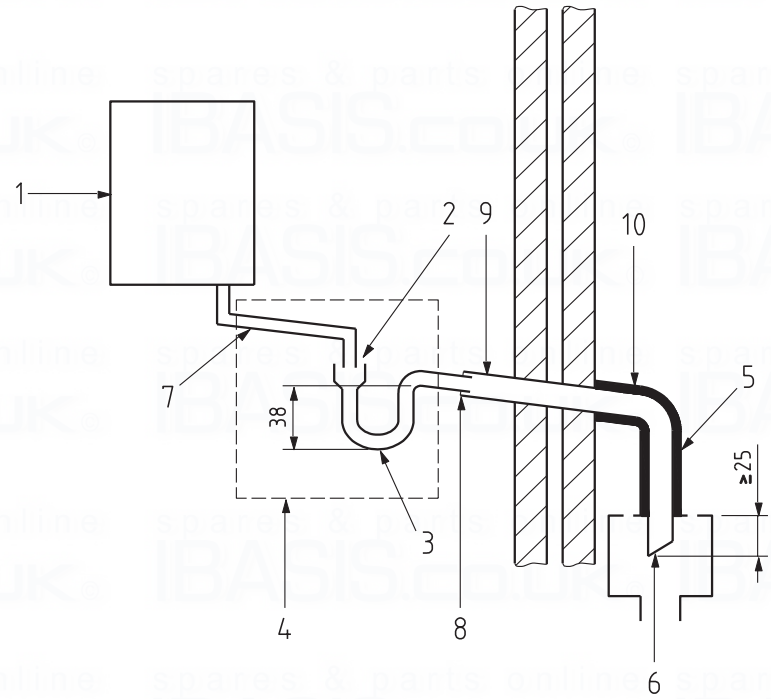

Key

1 Boiler
2 Visible air break
3 38 mm minimum trap
4 Visible air break and trap not required if there is a trap with a minimum condensate seal of 38 mm incorporated into the boiler
5 External length of pipe 3 m maximum
6 Open end of condensate drainage pipe direct into gully 25 mm min below grating but above water level; end cut at 45 °
7 Minimum internal diameter 19 mm
8 Pipe size transition point
9 Minimum internal diameter 30 mm
10 Water/weather proof insulation

Figure 7 – Example of a purpose-made soakaway

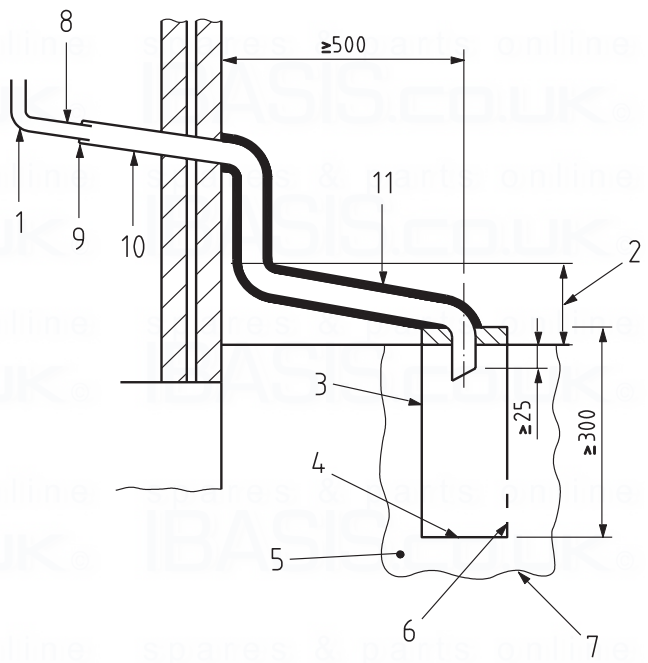

Key

1 Condensate discharge pipe from boiler
2 Ground (this section of the condensate drainage pipe may be run either above or below ground level); End cut at 45 °
3 Diameter 100 mm minimum plastic tube
4 Bottom of tube sealed
5 Limestone chippings
6 Two rows of three 12 mm holes at 25 mm centres, 50 mm from bottom of tube and facing away from house
7 Hole depth 400 mm minimum by 300 mm diameter
8 Minimum internal diameter 19 mm
9 Pipe size transition point
10 Minimum internal diameter 30 mm
11 Water/weather proof insulation

9 APPENDIX 2

FLOWCHART FOR CO AND COMBUSTION RATIO CHECK ON COMMISSIONING A CONDENSING BOILER

PRIOR TO CO AND COMBUSTION RATIO CHECK

The installation instructions should have been followed, gas type verified and gas supply pressure/rate checked as required prior to commissioning.

As part of the installation process, **ESPECIALLY WHERE A FLUE HAS BEEN FITTED BY PERSONS OTHER THAN THE BOILER INSTALLER**, visually check the integrity of the whole flue system to confirm that all components are correctly asembled, fixed and supported. Check that manufacturer's maximum flue lengths have not been exceeded and all guidance has been followed (e.g. Gas Safe Technical Bulletin TB008).

The flue gas analyser should be of the correct type, as specified by BS 7967

Prior to its use, the flue gas analyser should have been maintained and calibrated as specified by the manufacturer. The installer must have the relevant competence for use of the analyser.

Check and zero the analyser IN FRESH AIR as per analyser manufacturer's instructions.

NOTE

the air gas ratio valve is factory-set and must not be adjusted DURING COMMISSIONING unless this action is recommended after discussions with SIME LTD.

If any such adjustment is recommended and further checking of the boiler is required the installer/service engineer must be competent to carry out this work and to use the flue gas analyser accordingly.

If the boiler requires conversion to operate with a different gas family (e.g. conversion from natural gas to LPG) separate guidance will be provided by the boiler manufacturer and must be followed.

SET BOILER TO MAXIMUM RATE

Set the boiler to operate at maximum rate (full load condition). Allow sufficient time for combustion to stablilise.

NOTE - Do not insert analyser probe during this period to avoid possible "flooding" of sensor.

CARRY OUT FLUE INTEGRITY CHECK USING ANALYSER

Insert analyser probe into the air inlet test point and allow readings to stabilise.

NOTE - The flue must always be installed with flue test point. This will be located within the first piece connected to the boiler.

Is O_2 less than or equal to 20.6% and CO_2 less than 0.2%

NO

YES

VERIFY FLUE INTEGRITY

Analyser readings indicate that combustion products and inlet air must be mixing. Further investigation of the flue is therefore required.

Check that flue components are assembled, fixed and supported as per boiler/flue manufacturer's instructions.

Check that flue and flue terminal are not obstructed.

Is O_2 less than or equal to 20.6% and CO_2 less than 0.2%

YES

NO

Turn off appliance and call SIME LTD Technical Helplne for advice.

the appliance must not be commissioned or used, until problems are identified and resolved.

CHECK CO AND COMBUSTION RATIO AT MAXIMUM RATE

With boiler still set at maximum rate, insert analyser probe into flue gas samplng point. Allow readings to stablise before recording.

Is CO less than 350ppm AND CO/CO_2 ratio less than 0.004

NO

Check all seals around the appliance burner, internal flue seals, door and case seals. Rectify where necessary.

Is CO less than 350ppm AND CO/CO_2 ratio less than 0.004

YES

YES

NO

Turn off appliance and call SIME LTD Technical Helplne for advice.

the appliance must not be commissioned or used until problems are identified and resolved.

NOTE

Check and record CO and combustion ratio at both maximum AND minimum rate before contacting SIME LTD.

SET BOILER TO MINIMUM RATE

In accordance with boiler instructions, set boiler to operate at minimum rate (to minimum load condition). Allow sufficient time for combustion to stablilise.

NOTE: If manufacturer's instructions do not specify how to set boiler to minimum rate contact Technical Helpline for advice.

CHECK CO AND COMBUSTION RATIO AT MINIMUM RATE

With boiler set at minimum rate, insert analyser probe into flue gas samplng point. Allow readings to stablise before recording.

NOTE - if no flue gas sampling point is present and the correct procedure is not specified in the manual, contact SIME LTD Technical Helpline for advice.

Is CO less than 350ppm AND CO/CO_2 ratio less than 0.004

NO

YES

BOILER IS OPERATING SATISFACTORILY

no further actions required

Ensure test points are capped, boiler case is correctly repleced and all other commissioning procedures are completed.

Complete Benchmark Checklist, recording CO and combustion ratio readings as required.

VERY IMPORTANT!
PLEASE MAKE SURE YOUR COMMISSIONING CHECKLIST AND THE SERVICE INTERVAL RECORDS ENCLOSED FILLED IN CORRECTLY.
ALL GAS SAFE REGISTERED INSTALLERS CARRY A GAS SAFE ID CARD.BOTH SHOULD BE RECORDED IN YOUR COMMISSIONING CHECKLIST AND A SERVICE INTERVAL RECORDS.
YOU CAN CHECK YOUR INSTALLER IS GAS SAFE REGISTEREDBY CALLING ON 0800 408 5500 OR ALTERNATIVELY WWW.GASSAFEREGISTER.CO.UK

THE GAS SAFETY (INSTALLATION AND USE) REGULATIONS 1996.
It is the law that all gas appliances are installed by a registered person, in accordance with the above regulations.
Failure to install appliances correctly could lead to prosecution. It is in your own interest, and that of safety, to ensure that the law is complied with.
It is essential that the appliance is correctly earthed. An electricity supply of 240 V - 50 Hz fused at 3 A is required.
Read these instructions carefully before attempting to operate the appliance.

1.1 INTRODUCTION

The Sime **"MURELLE ELITE HE 30-35 ErP"** family are fully automatic, wall mounted, room sealed, fan assisted range of combination boilers.
When operating in winter mode, the appliance provides central heating as required and produces instantaneous hot water upon demand. When operating in summer mode, the central heating is not operational however the appliance continues to supply hot water whenever it is required.

The Sime **"MURELLE ELITE HE 35 T ErP"** family is a fully automatic, wall mounted, room sealed, fan assisted system boilers. The boiler is fitted with a divertor valve which enables the boiler to be directly connected to a hot water cylinder.

1.2 APPLIANCE OPERATION

"MURELLE ELITE HE ErP" - a demand of hot water will be sensed by the appliance detecting water flow (providing that the flow rate is above 2 l/m - 0.5 gal/min).
The fan will start and the burner will light at full output. If the draw off rate is near the maximum design flow rate the appliance will run continuously at full output until a tap is either turned off or the flow rate is reduced in which case the heat output will reduce accordingly to maintain a steady temperature.
Hot water is made available almost immediately at the appliance outlet, but the final temperature and time taken for the hot water to reach a tap depends upon the potentiometer setting, the rate at which water is drawn off, and the length of the pipe between the boiler and the tap.
When the tap is turned off, the appliance will revert to C.H. mode (if set on winter position) otherwise the burner will be extinguished pending the next demand for hot water.

"MURELLE ELITE HE 30-35 ErP" & **"MURELLE ELITE HE 35 T ErP"** - a demand for heating will be sensed by the boiler, The pump will start, and provide sufficient circulation is detected, the fan will start and the burner will light. The heat output will be controlled by the heating sensor and the user interface control.

1.3 OPERATING INSTRUCTIONS

1.3.1 Boiler ignition (fig. 24)

The first ignition of the boiler must be carried out by qualified technical personnel. Successively, if it is necessary to start up the boiler again, adhere strictly to the following instructions: open the gas tap to allow the flow of the fuel.

Move the main switch of the system to "ON". When fuel is fed to the boiler, a sequence of checks will be carried out and the display shows the normal condition of the functioning, always indicating the pressure of the system. If the blue luminous bar is on, this indicates the presence of voltage.

N.B.: The first press of any key (2) act only to illuminate the display, successive presses will be recognised to alter the mode or value.

Winter
Press the key ❄ of the controls (pos. 2) to activate the winter mode functioning (heating and D.H.W.). The display will be as shown in the figure.

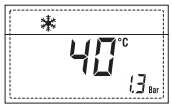

Summer
Press the key ☀ of the controls (pos. 2) to activate the summer mode functioning (only the production D.H.W.).
The display will be as shown in the figure.

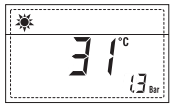

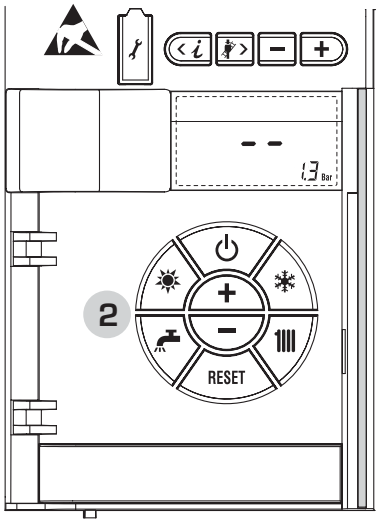

Fig. 24

1.3.2 Regulation C.H. temperature (fig. 25)

To set the temperature of the water for heating, press the key of the controls (2). The first time the key is pressed, the SET of heating circuit 1 is selected. The second time it is pressed, the SET if second zone fitted is selected. The display will be as shown in the figure. Change the values with the key + and −.
Standard visualisation will return to the display by pressing the key again, or after 10 seconds if no key is pressed.

Regulation of the external sensor (fig. 25/a)

If an external sensor is installed, the value of the output temperature is automatically chosen by the system, which quickly adjusts the environmental temperature on the basis of the external temperature.
If you wish to change the value of the temperature, increasing or decreasing that calculated automatically by the electronic card, proceed as indicated in the preceding paragraph.
The level of various correction of a value of temperature proportional calculated.
The display will be as shown in fig. 25/a.

1.3.3 Regulation D.H.W. temperature (fig. 26)

To set the desired temperature of the D.H.W., press the key of the controls (pos. 2). The display will be as shown in the figure.
Change the values with the key + and −.
The display will return to the standard visualisation by pressing the key again, or after 10 seconds if no key is pressed.

1.3.4 To switch off the boiler (fig. 24)

In the case of a short absence, press the key of the controls (pos. 2).
The display will be as shown in the fig. 24.
In this way, leaving the electricity and the fuel supply connected, the boiler is protected from frost and from the pump becoming jammed.
If the boiler is not used for a prolonged period, it is advisable to disconnect the electricity supply, by switching off the main switch of the system, and to close the gas tap and, if low temperatures are expected, to completely empty the hydraulic circuits to avoid pipes being broken by the formation of ice in the pipes.

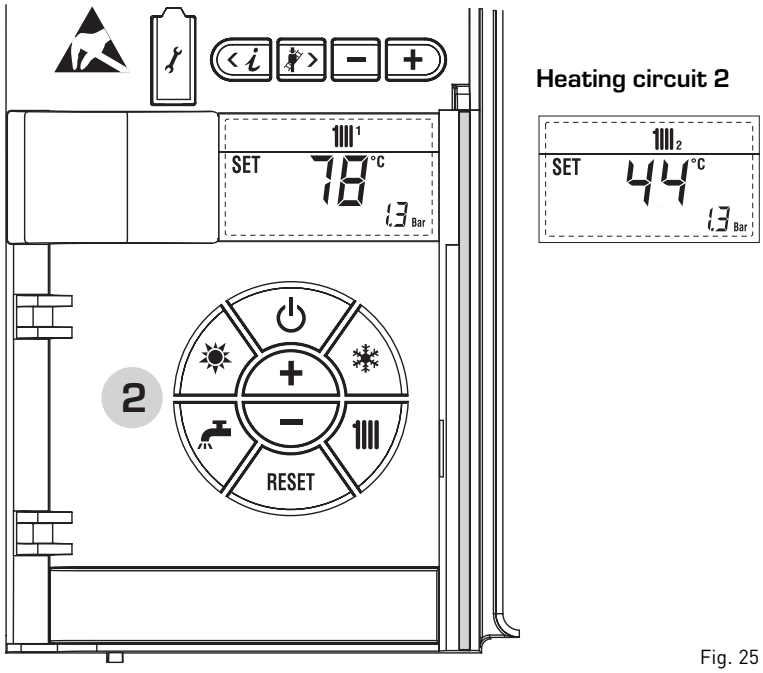

Fig. 25

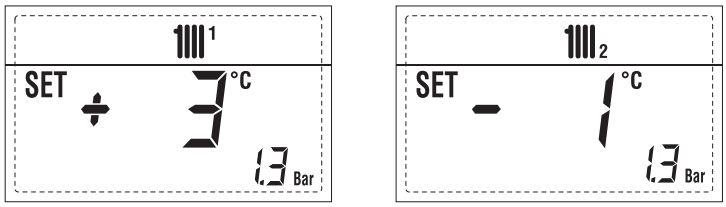

Fig. 25/a

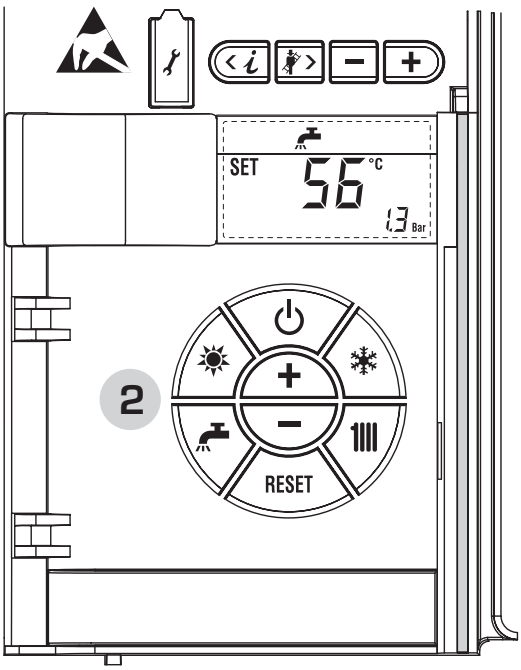

Fig. 26

1.4 ERRORS AND SOLUTIONS

When there is a functioning error, the display shows an alarm and the blue luminous bar becomes red.
Descriptions of the errors with the relative alarms and solutions are given below:

– **ALL 01 (fig. 27)**
Seek help and advice from a qualified engineer.

Fig. 27

– **ALL 02 (fig. 27/a)**
If the system pressure detected is lower than 0.5 bar, the boiler will stop and the display will show "ALL 02". To proceed increase the system pressure to between 1 and 1.5 bar using the filling loop.

Fig. 27/a

– **ALL 03**
The system pressure detected is more than 2.8 bar. Ensure that the filling loop is turned off and the pipe detatched. Lower the system pressure by draining from a radiator.
If problem persists seek help from a qualified engineer.

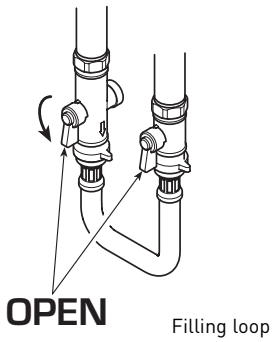

Filling loop

– **ALL 04**
Seek help and advice from a qualified engineer.

– **ALL 05**
Seek help and advice from a qualified engineer.

– **ALL 06 (fig. 27/c)**
Press the key RESET of the controls (2) to re-start the boiler.
If the error persists seek help and advice from a qualified engineer.

Fig. 27/c

– **ALL 07 (fig. 27/d)**
Press the key RESET of the controls (2) to re-start the boiler.
If the error persists seek help and advice from a qualified engineer.

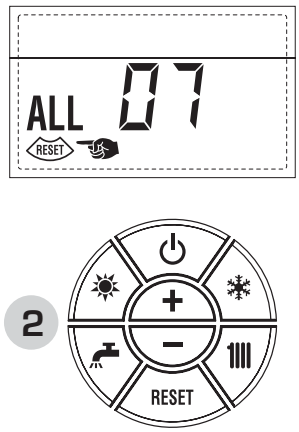

Fig. 27/d

– **ALL 08**
Seek help and advice from a qualified engineer.

– **ALL 09**
If the boiler detects inadequate system water circulation, the boiler will stop and display AL 09. Ensure that at least one radiator is turned on and that all isolation valves are open.
If problem persists it could be due to a blocked filter within the boiler, seek help and advice from a qualified engineer.

– **ALL 10**
Seek help and advice from a qualified engineer.

– **ALL 13 (fig. 27/e)**
Press the key RESET of the controls (2) to re-start the boiler.
If the error persists seek help and advice from a qualified engineer.

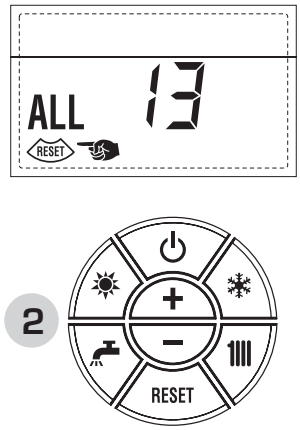

Fig. 27/e

– **ALL 14**
Seek help and advice from a qualified engineer.

– **ALL 15**
Seek help and advice from a qualified engineer.

– **From "ALL 20" to "ALL 29"**
Request assistance from qualified technical personnel.

1.5 GREEN LED PUMP HIGH EFFICIENCY (fig. 28)

If the LED signal is missing or the colour changes (blinking red/green or blinking red), contact an authorised technician.

Fig. 28

1.6 MINIMUM CLEARANCES

The following MINIMUM CLEARANCES

must be available for servicing the appliance:

	For servicing
ABOVE THE APPLIANCE CASING	200 mm
AT THE R.H.S.	15 mm
AT THE L.H.S.	15 mm
BELOW THE APPLIANCE CASING	200 mm
IN FRONT OF THE APPLIANCE	500 mm

1.7 ROUTINE SERVICING

To ensure continued efficient operation of the appliance, and as a condition of the warranty, the boiler must be serviced annually.
It is the law that any service work must be carried out by a Gas Safe Register registered engineer.
Ensure that the service is recorded in the installation guide use and maintenance section.

1.8 ELECTRICAL SUPPLY

THIS APPLIANCE MUST BE EARTHED. The mains supply must be fused at 3 amp.

1.9 VENTILATION

If the appliance is installed in a cabinet, it MUST NOT be used for storage purposes. Any ventilation provided for the appliance during installation MUST NOT be blocked and a periodic check must be made to ensure that the vents are free from obstructions.

1.9.1 Cleaning

Use only a damp cloth and mild detergent to clean the appliance outer casing. DO NOT use abrasive cleaners.

2.0 SAFETY

It is essential that the instructions in this booklet are strictly followed for the safe and economical operation of this appliance. The appliance functions as a fan assisted balanced flue unit.
The flue terminal MUST NOT BE OBSTRUCTED under any circumstances.
If damaged, turn off the appliance and consult the installer, service engineer, or gas supplier.
If it is known or suspected that a fault exists on the appliance it MUST NOT be used until the fault has been rectified by a competent person.

WARNING:
IF A GAS LEAK IS SUSPECTED OR EXISTS, TURN OFF THE GAS SUPPLY TO THE APPLIANCE AT THE GAS SERVICE COCK.
DO NOT OPERATE ANY ELECTRICAL SWITCHES.
DO NOT OPERATE ANY ELECTRICAL APPLIANCE.
OPEN ALL WINDOWS AND DOORS. DO NOT SMOKE.
EXTINGUISH ALL NAKED LIGHTS. CONTACT THE NATIONAL GAS EMERGENCY SERVICE IMMEDIATLEY ON 0800111999.

MECHANICAL TIME CLOCK - Code 8092228

Setting the time
The time of day can be set by grasping the outer edge of the black dial and turning it in a clockwise direction until the correct time is in line with the white pointer.

Setting the "switching time"
The "ON" periods are set by sliding the blue tappets, adjacent to the time periods required, to the outer edge of the dial.
The tappets that remain at the centre of the dial will be the "OFF" periods.

N.B.: The smallest switching time (ON or OFF) is 15 minutes.

- To select **"Timed"** mode move the selector switch in the middle of the clock face to the "◷" position.
- To select **"Constant"** mode move the selector switch in the middle of the clock face to the **"I"** position.
- To select **"OFF"** mode move the selector switch in the middle of the clock face to the **"O"** position.

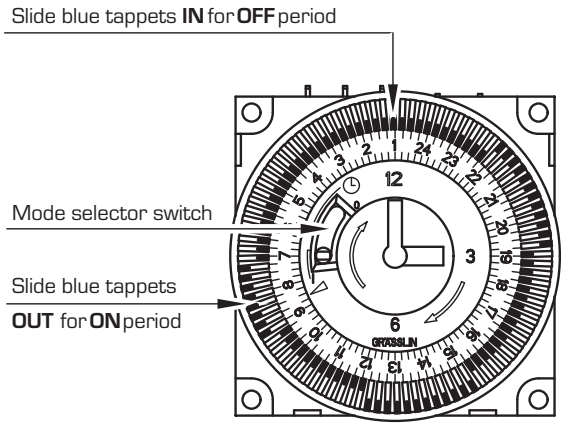

DIGITAL TIME CLOCK - Code 8092229

When the selector is in the "AUTO" position, boiler functioning is automatically controlled on the basis of the temperature levels and time periods set. The second selector must be in the "RUN" position to start. The programming procedure is described below:

– **Setting the time**
Set the selector to the "CLOCK" position. Press "h" to change the hour on the display, or "m" to change the minutes. To set the day, press the "1...7" button until the arrow is pointing to the correct day (1 = Monday... 7 = Sunday).

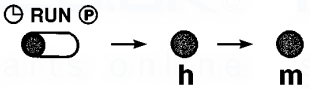

– **Setting the program**
The time clock has 8 on times and 8 off times. To make it easier to use, the time clock is supplied with 3 on times and 3 off times already set for each day of the week, as shown below:

Program	Time
1	06,00
2	09,00
3	12,00
4	14,00
5	18,00
6	22,00

NOTE: No program is set from 7 through 17.

To select programmes other than those already set, move the selector to position "P"; "0:001" will appear on the display, in which the first three digits indicate the hour and minutes, while the fourth digit identifies the program number. Odd-numbered programs identify requests for operation (day temperature), in which case the light bulb symbol will appear on the display, while even-numbered programs identify drops in temperature (night). Use the "1...7" key to select the day of the week (from 1 to 7) or days (1 ÷ 5, 6 - 7; 1 ÷ 6 or every day if the program is to be repeated every day of the week). Set the hour and minutes with the "h" and "m" buttons. Press "P" to store the operation in memory and go on to the next program. Repeat the same procedure to set the remaining programs.

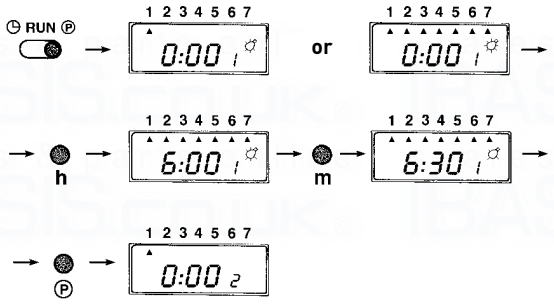

When finished programming, set the selector to "RUN" position.

– **Deleting one or more programs**
The on and off time must be deleted for each program to be deleted.
Set selector (2) to position "P". Select the desired program with button (3), then press button (4) to delete the day setting (the triangular symbols for the days should go away). If part of the program is deleted, when you set selector (2) back to the "RUN" position an error will appear in the clock display, referring to the program which is incorrect.
To delete all programs, put the selector in position "P" and press buttons (3) and (5) at the same time.

– **Setting the SKIP function**
The SKIP function deactivates programs for the next day and resumes regular programming 24 hours later.
This function is useful if you will be out all day and don't need heating.
To start this function, press button (7), which is active only when selector (2) is in "RUN" position. Once you have selected the SKIP function, it will go into effect at 0:00 of the next day for 24 hours. You cannot turn it off once it has started, so regular programming will not resume until 24 hours have passed.

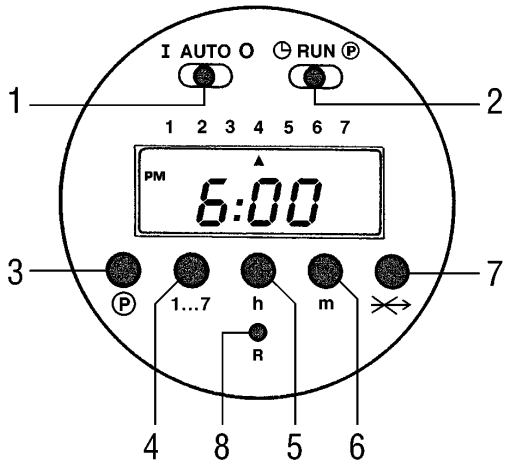

1 Manual/automatic operation selector
2 Program/schedule setting selector
3 Program button
4 Day of the week button
5 Hour button
6 Minute button
7 SKIP button
8 Reset button

ANALOGIC RF TIME PROGRAMMER - Code 8092231

4. *Commissioning* (The Receiver and the Transmitter are pre-commissioned)

a. Turn on electrical supply to boiler and turn boiler selector to

b. Press and hold black button on Receiver until the neon light has flashed twice.

c. Release the button and the neon light will remain illuminated.

d. Insert the batteries into the Transmitter - the Transmitter will immediately send signals.

e. When a signal is received from the Transmitter, the Receiver neon will go out. The radio link between the Transmitter and Receiver is now established.

Note: When in operation and an 'ON' signal is received the Receiver neon will illuminate continuously. When an 'OFF' signal is received the neon will remain off, but will flash intermittently.

5. *User Instructions - see Fig. 5*

Note: Panel (A) slides back to reveal quick reference user instructions (B).

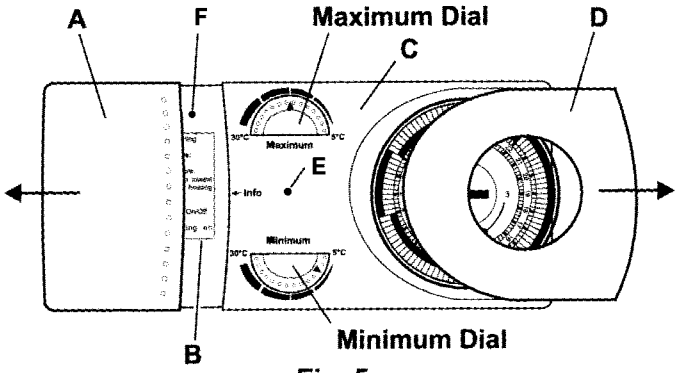

Fig. 5

a. Set Time

Slide cover (D) off the Transmitter (C).

Turn the outer dial clockwise to set the clock hands to the correct time. Ensure the time corresponds with the correct time on the 24hr dial as shown. e.g. 3.00pm = 15 not 3.

Note: Do not rotate anti-clockwise or damage may occur to the unit. Rotate the minute hand with your finger to set the exact time.

b. Set Heating ON/OFF Periods

Select the ON times by pushing the tappets to the outside.

Select the OFF times by pushing the tappets to the inside.

Fig. 6 shows the clock set as follows:

ON	3.00pm	to	10.00pm	(15-22)
OFF	10.00pm	to	5.00am	(22-5)
ON	5.00am	to	8.00am	(5-8)
OFF	8.00am	to	3.00pm	(8-15)

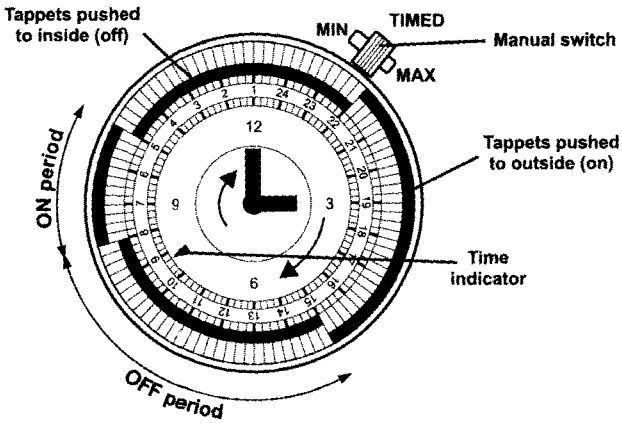

Fig. 6

c. Set Maximum/Minimum Room Temperatures

Maximum setting - Rotate the Maximum dial (see Fig. 5) to give the required room temperature upto 30°C when heating is on.
Minimum setting - Rotate the Minimum dial (see Fig. 5) to a lower temperature down to 5°C to ensure that when the heating is off a minimum room temperature is maintained.

d. Manual Switch - see Fig. 6

The clock has a manual heating ON/OFF switch which operates as follows:
TIMED position - Heating On/Off as set by tappets.
MAX position - Heating On continuously.
MIN position - Heating Off, but a minimum set room temperature is maintained.

4. Commissioning (The Receiver and the Transmitter are pre-commissioned)

a. Turn on electrical supply to boiler and turn boiler selector to

b. Press and hold black button on Receiver until the neon light has flashed twice.

c. Release the button and the neon light will remain illuminated.

d. Press and hold the top and bottom button on the Transmitter at the same time until Ed 01 is displayed. Then press OK

e. Then, Fu on (flashing) is displayed. Then press OK

f. The symbol will flash on the Transmitter display approximately every 5 seconds. The transmitter is now in continuous radio operation.

g. When a signal is received from the Transmitter, the Receiver neon will go out. The radio link between the Transmitter and Receiver is now established.

h. Press the Selector button or OK to return to normal operation.

Note: When in operation and an 'ON' signal is received the Receiver neon will illuminate continuously. When an 'OFF' signal is received the neon will flash intermittently.

5. User Instructions - see Fig. 5

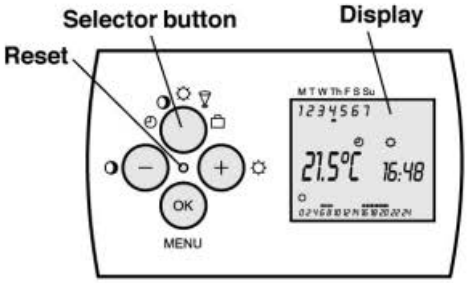

Fig. 5

a. Set Time

Press the Menu button until flashing is displayed

Press the −/+ buttons to set current HR, then press OK

Press the −/+ buttons to set current MIN, then press OK

Press the −/+ buttons to set current DAY (1 = Monday, 7 = Sunday), then press OK

b. Set Maximum Room Temperature

Press the Menu button until flashing is displayed

Press the −/+ buttons to select the required maximum room temperature, then press OK

c. Set Minimum Room Temperature

Press the Menu button until flashing ◑ is displayed

Press the −/+ buttons to select the required minimum room temperature, then press OK

d. Set Heating Programme

Press the Menu button until a flashing P1, P2, P3, P4 or Pd is displayed

P1 - ON between 7am and 11pm

P2 - ON between 6am and 9am then 5pm and 10pm

P3 - ON for 24hrs

P4 - OFF for 24hrs except when the minimum room temperature is reached, when it will come on

Pd - Daily programmes can be set individually

Note: Programmes P1 to P4 cannot be changed.
If selecting a programme between P1 and P4 press the −/+ buttons until the programme required is displayed, then press OK for each day.
To set a Pd programme, press the − button for **OFF** periods and press the + button for **ON** periods, then press OK. Repeat for each day.

Sime Ltd
1a Blue Ridge Park
Thunderhead Ridge
Glasshoughton, Castleford, WF10 4UA

Phone: 0845 9011114
Fax: 0845 9011115

www.sime.co.uk
Email: enquiries@sime.co.uk