INSTRUCTIONS FOR INSTALLATION AND SERVICING

ECOmax VUW 236 EH

G.C. No. 47 044 23

ECOmax VUW 286 EH

G.C. No. 47 044 24

Wall hung room sealed fan assisted
condensing combination boilers

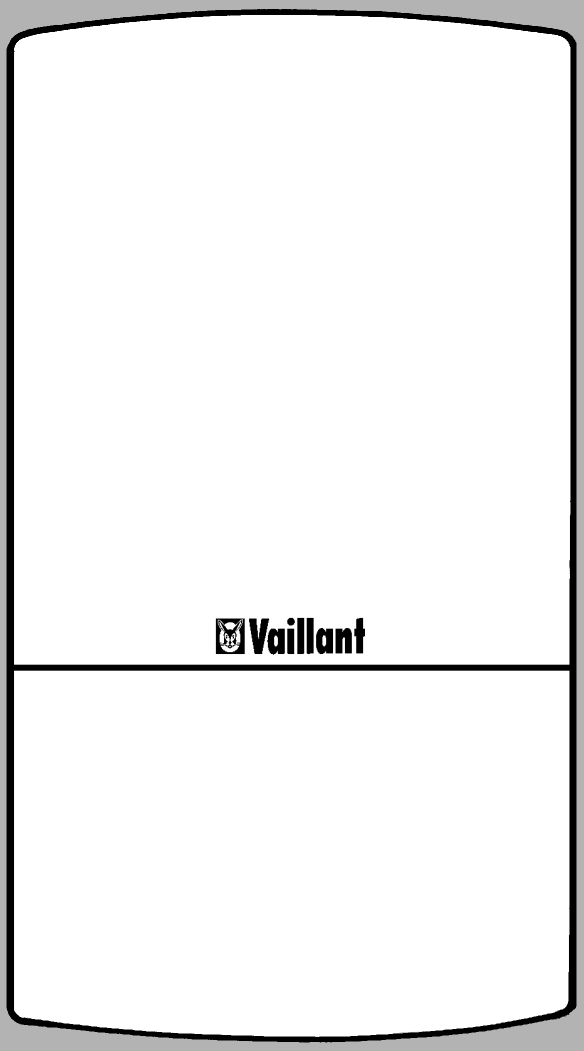

Vaillant

HEATING, CONTROLS, HOT WATER

spares & parts online IBASIS.CO.UK

	Page
1. Introduction	**3**
2. Boiler Specification	**4**
2.1 Technical Data	4
2.2 Dimensions	5
2.3 Boiler connections	5
2.4 Function diagram	6
3. General Requirements	**7**
3.1 Related documents	7
3.2 Boiler location	8
3.3 Gas supply	9
3.4 Flue system	9
3.5 Air suply	11
3.6 Electricity supply	11
3.7 Guide to system requirements	11
4. Boiler installation sequence	**14**
4.1 General	14
4.2 Boiler delivery	14
4.3 Preparation of boiler location	15
4.4 Pipework connections	17
4.5 Installing the flue system	18
4.6 Mounting the boiler	18
4.7 Connecting the flue assembly	20
4.8 Electrical installation	22
4.9 Controls	23
5. Commissioning	**25**
5.1 Preliminary electrical checks	25
5.2 Gas supply	25
5.3 Water supply	25
5.4 Filling the heating system	26
5.5 Initial system flush ('cold')	26
5.6 Filling condensate trap	27
5.7 Initial lighting	27
5.8 Gas inlet working pressure	28
5.9 Adjusting central heating output (range rating)	28
5.10 Main burner pressure	29
5.11 Functional checks	30
5.12 Checking flame supervision device	32
5.13 Final system flush ('hot')	33
5.14 Fitting case	33
5.15 Handing over to user	33

	Page
6. Servicing	**34**
6.1 Initial inspection	35
6.2 Routine maintenance	35
6.3 Recommisioning the boiler	37
7. Parts replacement	**38**
7.1 Initial preparation	38
7.2 Fan	40
7.3 Air pressure sensor	41
7.4 Burner	41
7.5 Electrodes	42
7.6 Condensate sump	43
7.7 Condensate trap	44
7.8 Temperature sensors (NTCs)	44
7.9 Gas valve	44
7.10 Main Heat exchanger	45
7.11 CH expansion vessel	46
7.12 Main safety isolating transformer	47
7.13 Ignition transformer	48
7.14 Pump	48
7.15 Automatic air release	49
7.16 Automatic bypass	49
7.17 Diverter valve	50
7.18 Pressure gauge	51
7.19 Water section	51
7.20 DHW microswitch	52
7.21 DHW heat exchanger	53
7.22 Circuit boards	53
8. Fault finding	**57**
8.1 Introduction	57
8.2 Logical fault finding procedure	58
8.3 Fault finding using fault mode	60
8.4 Fault diagnosis using status mode	62
9. Electrical diagrams	**65**
9.1 Functional flow diagram	65
9.2 Wiring diagram	66
9.3 Schematic appliance circuit diagram	67
10. Short parts list	**68**
11. Supplementary information for ECOmax	**70**

THE GAS SAFETY (INSTALLATION AND USE) REGULATIONS 1994:

`In your own interest, and that of safety, it is law that all gas appliances are installed by competent persons, in accordance with the above regulations. Failure to install appliances correctly could lead to prosecution.'

Leave these instructions with the user when the installation is completed.

1. Introduction

Note: This boiler must be installed and serviced by a competent person in accordance with the Gas Safety (Installation and Use) Regulations 1994. In the U.K. `CORGI' Registered Installers undertake the work to a safe and satisfactory standard.

ECOmax is a fully automatic, wall mounted, room sealed, condensing (high efficiency) combination boiler for central heating and domestic hot water. Domestic hot water is supplied directly from the boiler, and has priority over the central heating. (This has the advantage that no copper cylinder, cold water tank, feed and expansion tank and associ-ated pipework are required).

The boiler has been designed for use with sealed systems, and comes fully tested and assembled with built-in circulating pump, bypass, expansion vessel and diverter valve.

The boiler, because it has a larger heat exchanger, extracts more heat from the flue gases. The conversion of this otherwise wasted heat into usable warmth means the boiler has a higher efficiency. Because the flue gases are reduced to such a low temperature, the water vapour contained in them can condense. To discharge this condensate a drain is provided on the boiler, and this must be connected to a drainage point on site.

The boiler features a comprehensive diagnostic system, which gives detailed information on the boiler status when operating and performance of key components to aid in commissioning and fault finding.

ECOmax range consists of models with outputs for domestic hot water of 22.7 and 28.3 kW. The boiler is easily sited on any internal wall and can be installed with either a horizontal or vertical RSF (Room Sealed Fan assisted) flue. Flue extensions and additional bends and elbows are available for increased siting flexibility. (The boiler is not suitable for external installation).

If desired, an inhibitor may be used in the system. Guidance on the use of inhibitors is contained in these instructions. (The boiler does not utilise aluminium in the water system and does not require a special inhibitor).

The boiler is designed to operate on Natural Gas only.

The boiler contains a domestic hot water heat exchanger. The temperature in the heat exchanger is limited by the boiler control system and it is not normally necessary to install a scale reducer on the cold mains inlet to the boiler. However, in exceptionally hard water areas to prevent scale formation in the property hot water system pipework a scale reducer may be fitted.

The data badge is fitted on the combustion chamber cover.

CE

ECOmax boilers carry the „CE" Mark. This demonstrates that the boilers fulfill the essential requirements of the Gas Appliance Directive (90/396/EEC) and the Gas Appliance (Safety) Regulations 1992.

The „CE" Mark also demonstrates that the boilers comply with the requirements of the Electromagnetic Compatibility Drective (89/336/EEC), the Low Voltage Directive (73/23/EEC), the Boiler Efficiency Directive (92/42/EEC) and the Boiler (Efficiency) Regulations 1993.

2. Boiler specification

2.1 Technical data

ECOmax	VUW 236 EH	VUW 286 EH	units
Countries of Destination	GB, IE		
Maximum CH heat input	19.5 (66,500)	24.2 (82,600)	kW (Btu/h)
CH heat output range			
80 °C flow/60 °C return	9.9-17.2 (33,800-58,700)	12.3-21.3 42,000-72,700)	kW (Btu/h)
50 °C flow/30 °C return	10.5-18.0 (35,800-61,400)	13.1-22.3 (44,700-76,100)	kW (Btu/h)
Maximum DHW heat input	25.0 (85,300)	31.1 (106,100)	kW (Btu/h)
Maximum DHW heat output	22.7 (77,500)	28.3 (96,600)	kW (Btu/h)
DHW flow rate @ 35 °C rise	9.3	11.6	l/min
Mains water pressure required for max. flow rate	1.0	1.0	bar
Minimum water flow rate	2	2	l/min
Mains water pressure required for min flow rate	0.2	0.2	bar
Maximum inlet water pressure	10	10	bar
Inlet gas working pressure required (Natural Gas)	20	20	mbar
Gas supply (G20) Gross C.V. (s.t.)	37.8	37.8	MJ/m^3
Gas burner pressure max (DHW)	3.0	3.0	mbar
Gas rate max (DHW)	2.38	2.96	m^3/h
CH flow temperature range	35-90	35-90	°C
Minimum CH water flow (for 20 °C rise)	770	960	l/h
Pump pressure available	0.25	0.25	bar
12l expansion vessel pre-charge pressure	0.8	0.8	bar
Maximum CH system pressure	3.0	3.0	bar
Connections			
Heating flow / return	3/4	3/4	in. BSP
Cold water inlet	15	15	mm
DHW outlet	15	15	mm
Gas inlet	15	15	mm
Condensate drain (internal diameter, min)	19	19	mm
Pressure relief discharge pipework (min)	15	15	mm
Weight	56	57	kg
Boiler water content	1.5	1.6	litres
Volume of condensate (max.)	0.5	0.6	l/h
Maximum flue gas temperature	70	70	°C
Electrical supply			
Voltage	230/50	230/50	V~/Hz
Fuses internal/external	2/3	2/3	A
Power input	130	130	W

2.2 Dimensions

(All dimensions in mm)

1a Air/flue duct to the rear
1b Air/flue duct to the side
2 Appliance bracket
3 Heating system return 3/4" Rp (3/4" B.S.P.)
4 Cold water connection (15 mm)
5 Gas connection (15 mm)
6 Hot water connection (15 mm)
11 Heating system flow 3/4" Rp (3/4" B.S.P.)
12 Pre-assembled connection set with service valves (flow and return) pressure relief valve, cold and hot water connection
13 Pressure relief valve 3/4" Rp (3/4" B-S.P.)
14 Boiler condensate drain (18 mm O. D.)

* with standard horizontal flue accessory.
(max. = 6880 mm with extensions)

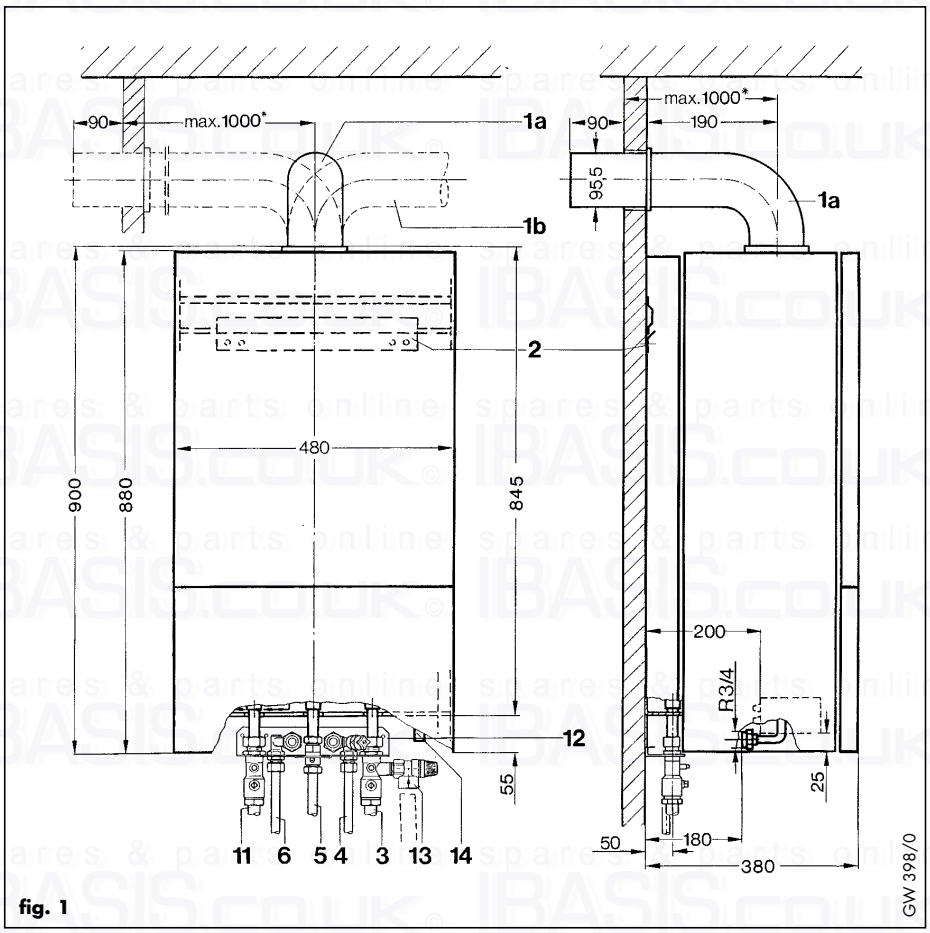

fig. 1

2.3 Boiler connections

1 Connection support bracket
2 Service valve (flow of heating system)
3 Domestic hot water connection
4 Compression Union (gas)
5 Gas service valve (supplied with the boiler)
6 Cold water connection with shut-off walve
7 Service valve (return of heating system)
8 Discharge pipe
9 Pressure relief valve
10 Compression union (return of heating system)
11 Compression union (flow of heating system)
14 Boiler condensate drain
23 Frame of appliance (lower connection)

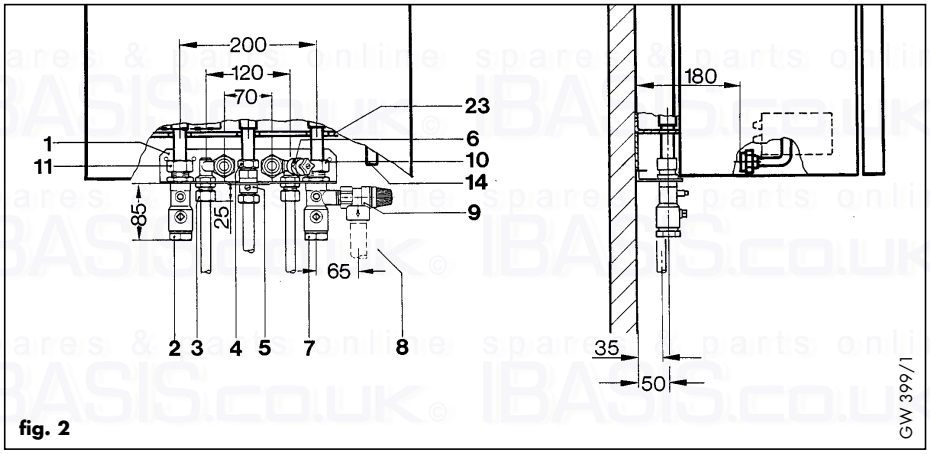

fig. 2

2.4 Function diagram

1 Air duct
2 Flue gas duct
3 Fully modulating automatic gas valve
4 Fully modulating fan
5 Fully modulating low NOx burner
6 Combustion chamber
7 Flame sensing electrode
8 High efficiency heat exchanger
9 Condensate trap
10 DHW heat exchanger
11 Boiler display
12 User control panel
13 DHW outlet
14 CH flow service valve
15 Gas service valve
16 Air pressure sensor
17 Ignition electrodes
18 Temperature sensors (NTCs)
19 Expansion vessel charging valve
20 Expansion vessel
21 Automatic bypass valve
22 Automatic air vent
23 Circulating pump
24 Diverter valve
25 Pressure gauge
26 Water section
27 Pressure relief valve
28 CH return service valve
29 Cold water shut off valve

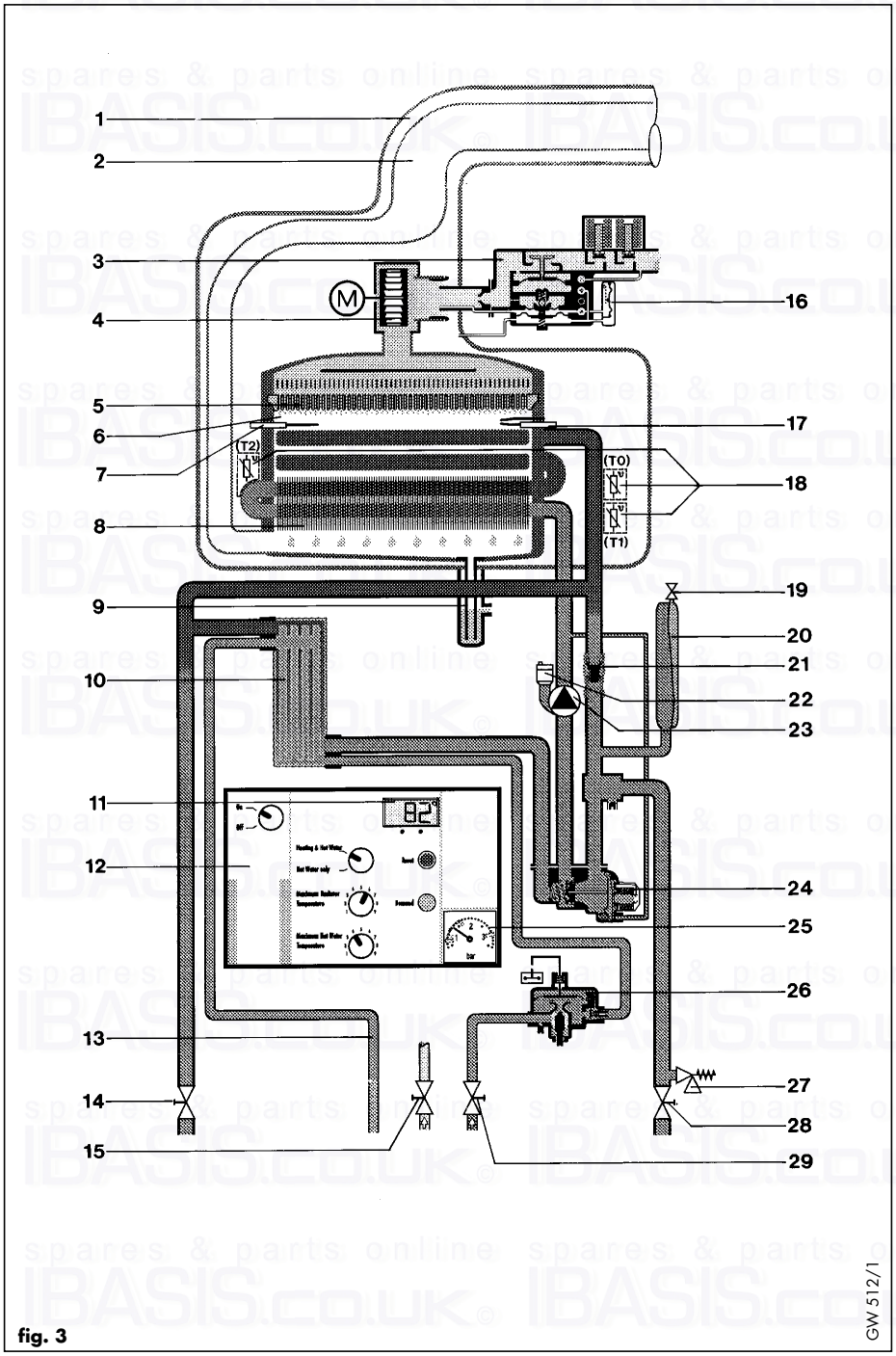

fig. 3

3. General requirements

3.1 Related documents

The installation of the boiler must be in accordance with the relevant requirements of Gas Safety (Installation and Use) Regulations 1994, Health and Safety Document No. 635 (The Electricity at Work Regulations 1989), BS7671 (IEE Wiring Regulations) and the bylaws of the local Water Undertaking. It should be in accordance with any relevant requirements of the Local Authority, Building Regulations, Building Standards (Scotland) Regulations and the relevant recommendations of the following British Standards:-

BS 5440: Flues and ventilation of gas fired boilers not exceeding 60 kW:
- Part 1: Flues
- Part 2: Ventilation

BS 5449: Specification for forced circulation hot water for domestic premises.

BS 5546: Specification for gas hot water supplies for domestic premises.

BS 6700: Services supplying water for domestic use within buildings and their curtilages.

BS 6798: Specification for installation of gas fired boilers not exceeding 60 kW input.

BS 6891: Specification for installation of low pressure gas pipework up to 28 mm (R1) in domestic premises (2nd family gas).

BS 7593: Treatment of water in domestic hot water central heating systems.

BRITISH GAS PUBLICATION DM2: Guide for Installation in Timber Framed Housing

Important

The appliance must be installed and serviced by a competent person as stated in the Gas Safety (Installation and Use) Regulations 1994

3.2 Boiler location

The location chosen for the boiler must permit the provision of a satisfactory flue termination. The location must also provide adequate space for servicing and air circulation around the boiler. The boiler may be installed in any room, although particular attention is drawn to the requirements of the I.E.E. Regulations and, in Scotland, the electrical provisions of the Building Regulations, in respect of the installation of the boiler in a room containing a bath or shower.

(Note: Where a room sealed boiler is installed in a room containing a bath or shower, any electrical switch or boiler control utilising mains electricity should be so situated that it cannot be touched by a person using the bath or shower).

Where the installation of the boiler will be in an unusual location, special procedures may be necessary and BS 5546 and BS 6798 give detailed guidance on this aspect.

The boiler must be mounted on a flat, vertical wall, which must be sufficiently robust to take the weight of the boiler. The boiler may be installed on a combustible wall, subject to the requirements of the Local Authorities and Building Regulations.

A compartment used to enclose the boiler must be designed and constructed specifically for this purpose. (An existing cupboard or compartment may be used provided that it is modified for the purpose). Details of essential features of cupboard/compartment design including airing cupboard installations are given in BS 6798.

If the boiler is to be fitted in a timber framed building, it should be fitted in accordance with British Gas Publication DM2 `Guide for Gas Installations in Timber Framed Housing'.

3.3 Gas supply

The gas supplier should ensure the availability of an adequate supply of gas.

A gas meter may only be connected to the service pipe by the supplier of gas or their contractor.

An existing meter should be checked to ensure that it is capable of passing the rate of gas supply required.

Installation pipes should be fitted in accordance with BS 6891.

Pipework from the meter to the boiler must be of an adequate size. Do not use pipes of a smaller size than the boiler gas connection (15mm).

The complete installation must be tested for soundness and purged as described in BS 6891.

3.4 Flue system

The standard horizontal flue system (Accy No 300931) is suitable for installations up to 1 metre measured from the centre of the boiler flue outlet to the outside face of the wall (A, fig. 4). One metre flue extensions (Accy No 300923) are available to extend this length up to 6880 mm. 90 ° elbows (Accy No 300934) and 45 ° bends (Accy No 300949) are also available to increase siting flexibility.

A vertical flue system is also available (Accy No 300945).

Refer to the flue installation instructions for full details.

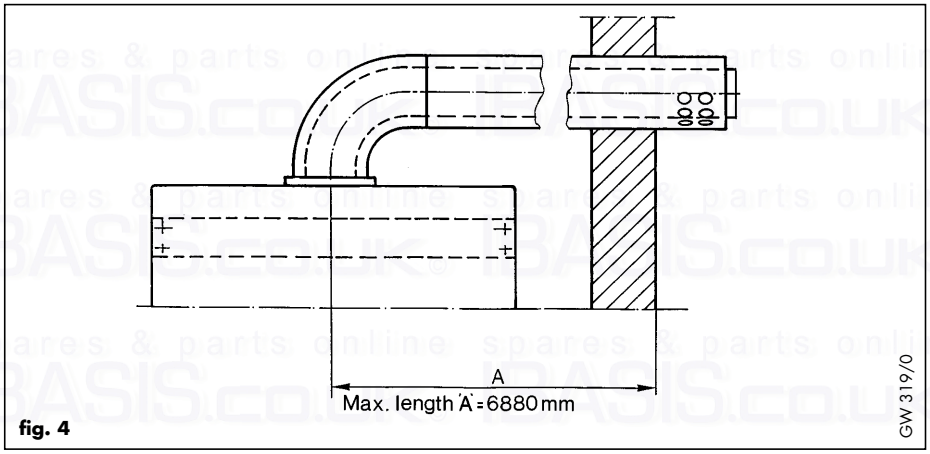

fig. 4

3.4.1 Flue Termination

1. The terminal must be positioned such that the combustion products can disperse freely at all times.

2. Flue gases from high efficiency condensing boilers are emitted at relatively low temperatures, leading to a tendency for a plume of water vapour to be visible at or near the terminal. More care should therefore be taken when choosing the site for a terminal of a condensing boiler. If possible avoid placing the terminal below a window, next to a door or close to opposing walls. It is also recommended that the flue is not terminated beneath a car port roof.

3. If the terminal is fitted less than 2m above a balcony, above ground or above a flat roof to which people have access then a suitable guard must be provided and fitted (available from Tower Flue Components, Tonbridge, TN9 1TB: reference CGDK3BL).

Table 1:
Terminal position for fan-assisted flue. (minimum distance - see fig. 5)

	mm
A- Directly below an openable window or other opening (e.g. air brick)	300
B- Below gutters, soil pipes or drain pipes	75[1]
C- Below eaves	200[1]
D- Below balconies	200[1]
E- From vertical drain pipes and soil pipes	25
F- From internal or external corners	300[2]
G- Above ground or balcony level	300
H- From a surface facing a terminal	600
I- From a terminal facing a terminal	1200
K- Vertically from a terminal on the same wall	1500
L- Horizontally from a terminal on the same wall	300
M- Distance from adjacent wall for Vertical Flue	500

Note: Vertical flues must not terminate within 600 mm of an openable window, air vent or any other ventilation opening.

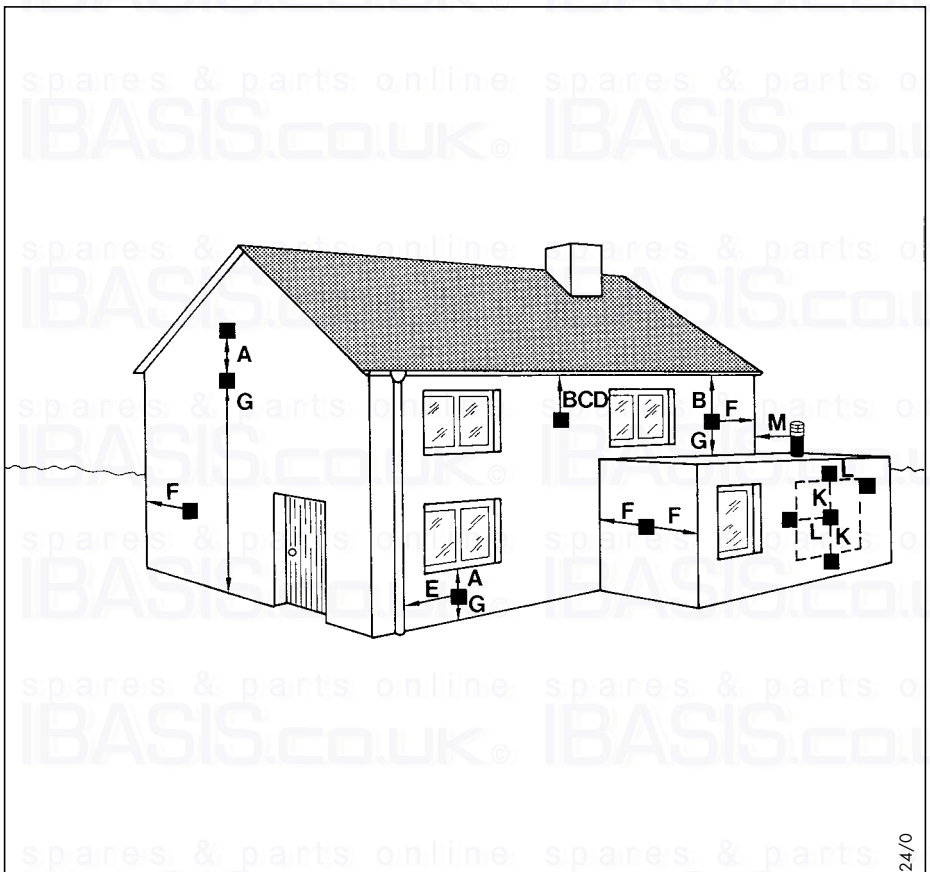

fig. 5

[1] Dimensions B, C and D: These clearances may be reduced to 25mm without affecting the performance of the boiler. In order to ensure that the condensate plume does not affect adjacent surfaces the terminal should be extended as shown in fig. 6.

[2] Dimension F: This clearance may be reduced to 25mm without affecting the performance of the boiler. However, in order to ensure that the condensate plume does not affect adjacent surfaces a clearance of 300 mm is preferred.

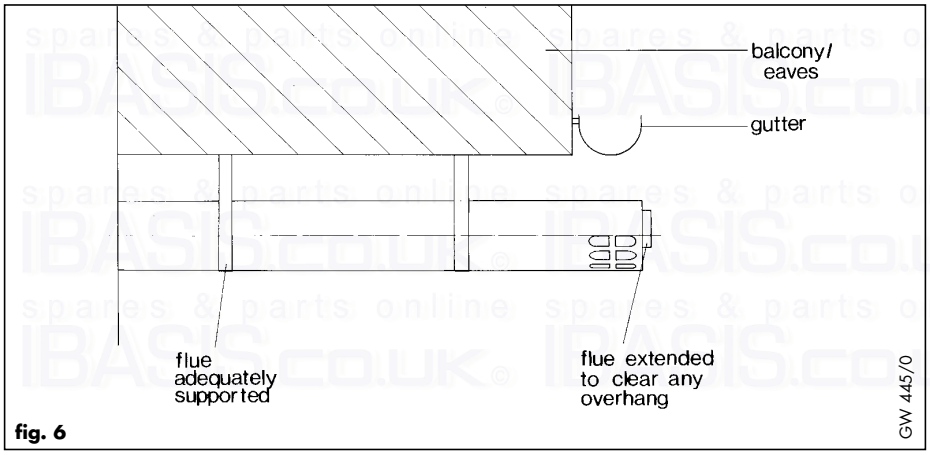

fig. 6

3.5 Air supply

Detailed recommendations for air supply are given in BS 5440: Part 2.

It is not necessary to have an air vent in the room or internal space in which the boiler is installed.

3.5.1 Cupboard or compartment air supply

ECOmax Room Sealed Condensing Combination Boilers are very high efficiency appliances. As a consequence the heat loss from the appliance casing during operation is very low. For cupboard and compartment installations it is therefore not necessary to provide any high or low level permanent air vents for cooling purposes.

3.6 Electricity supply

A 230 volts~ 50Hz single phase electricity supply fused to 3 amps must be provided in accordance with the latest edition of the I.E.E. Wiring Regulations and any other local regulations that may apply.

THIS APPLIANCE MUST BE EARTHED. The method of connection to the mains electricity supply must provide a means of completely isolating the boiler and its ancillary controls. Isolation is preferably by the use of a fused three-pin plug and unswitched shuttered socket outlet, both complying with the requirements of BS 1363. Alternatively, a 3 Amp fused double-pole switch with a 3mm contact separation on both poles may be used.

3.7 Guide to system requirements

3.7.1 Water circulation system

Detailed recommendations for the water circulation system are given in BS 6798 and BS 5449: Part 1 (for small bore and micro bore central heating systems).

Pipework not forming part of the useful heating surface should be insulated to help prevent heat loss and possible freezing, particularly where pipes are run through roof spaces and ventilated underfloor spaces.

Draining taps must be located in accessible positions which permit the draining of the whole system including the boiler and the hot water system. Draining taps should be at least 1/2 in. BSP nominal size and be in accordance with BS 2879.

The boiler is suitable for use with minibore or microbore systems. Copper tubing to BS 2871: Part 1 should be used for water carrying pipework. All capillary joints in the DHW pipework must be made with lead free solder.

Particularly where a new boiler is to be fitted to an existing system, it is good practice that the system is thoroughly cleansed. This cleansing should take place prior to the fitting of the new boiler and be in accordance with BS 7593.

For advice on the application of system cleansers contact sentinel, Grace Dearbom Ltd.
Widnes., Cheshire, WA8 8 UD.
Tel.: 0151 495 1861

3.7.2 Filling and make up

The system should be filled with water via a separate filling point fitted at a convenient point on the heating circuit. Where local Water Authority Regulation allows, a temporary connection to the mains may be used (fig. 7). The connection must be removed when filling is completed. Where local Water Authority Regulation does not allow temporary connection, a sealed system filler pump with break tank must be used. **The heating system will not be filled automatically from the domestic side.**

(Alternative methods of filling sealed systems are given in BS 5449).

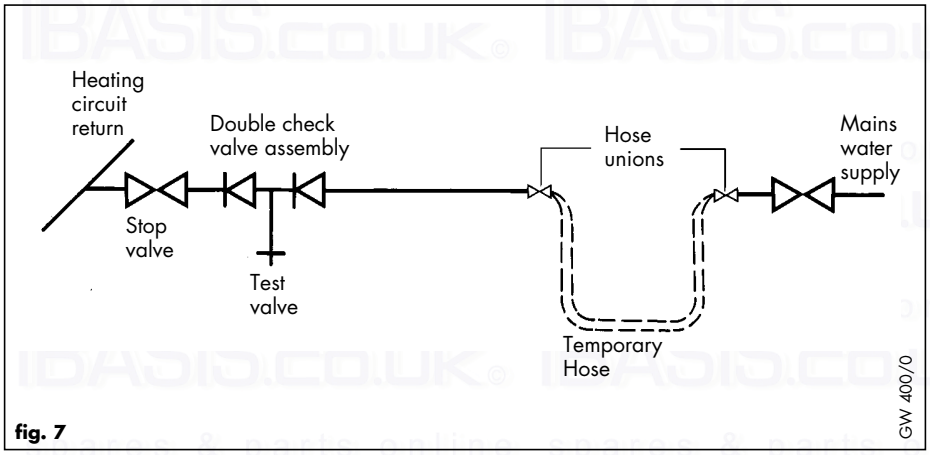

fig. 7

3.7.3 Pressure relief valve

A pressure relief valve is provided ready-assembled to the return C.H. service valve (4, fig. 8). This safety device is required on all sealed C.H. systems and is pre-set at 3 bar and provided with a 3/4 in. BSP connection for a discharge pipe (minimum size 15mm).

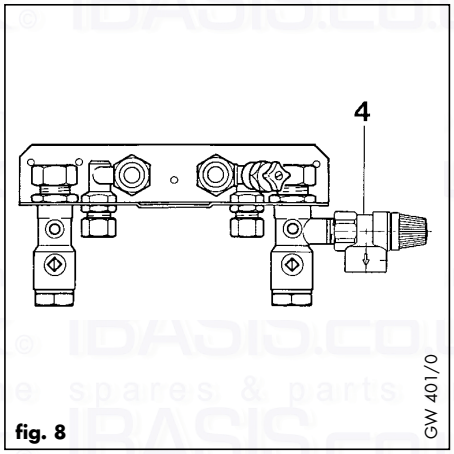

fig. 8

3.7.4 Pressure gauge

This is factory fitted to the boiler and indicates the primary circuit pressure to facilitate filling and testing.

3.7.5 Expansion vessel

An expansion vessel is incorporated into the boiler suitable for a sealed heating system with a maximum water contents of 135 litres.

If the nominal capacity of the built-in expansion vessel is not sufficient for the heating system (for instance in case of modernization of old open systems) an additional expansion vessel can be installed external to the boiler in the return pipe as close as possible to the boiler in accordance with BS 5449: Part 1.

Guidance on the sizing of an additional expansion vessel is given in Table 2.

3.7.6 Circulating pump

The circulating pump is included in the boiler. The pump head available for the heating system is shown in fig. 9.

3.7.7 System by-pass

An automatic system by-pass is included within the boiler. The boiler is suitable for use in systems with thermostatic radiator valves and no additional by-pass is required.

3.7.8 Venting

The boiler is fitted with an automatic air vent. Additional provision should be made to enable the heating system to be vented during filling and commissioning either by automatic air vents or manually.

3.7.9 DHW expansion vessel accessory

A DHW expansion vessel kit (Accy. No. 8070) is available as an optional extra from Vaillant Ltd. This expansion vessel kit should be fitted to the boiler whenever either a stop valve of the loose jumper type or a non return valve are present in the cold water mains supply to the boiler (fig. 10).

Table 2: Sizing of Additional Expansion Vessel

Safety valve setting (bar)	3.0	
Initial system pressure (bar)	1.0	1.5
Total water content of system	**VESSEL VOLUME (L)**	
litres		
25	2.7	3.9
50	5.4	7.8
100	10.9	15.6
125	13.6	19.5
150	16.3	23.4
175	19.1	27.3
200	21.8	31.2
225	24.5	35.1
250	27.2	39.0
275	30.0	42.9
300	32.7	46.8
325	35.7	50.7
350	38.1	54.6
375	40.9	58.5
400	43.6	62.4
425	46.3	66.3
450	49.0	70.2
475	51.8	74.1
500	54.5	78.0
For system volumes other than those given above, multiply the system volume by the factor across	0.109	0.156

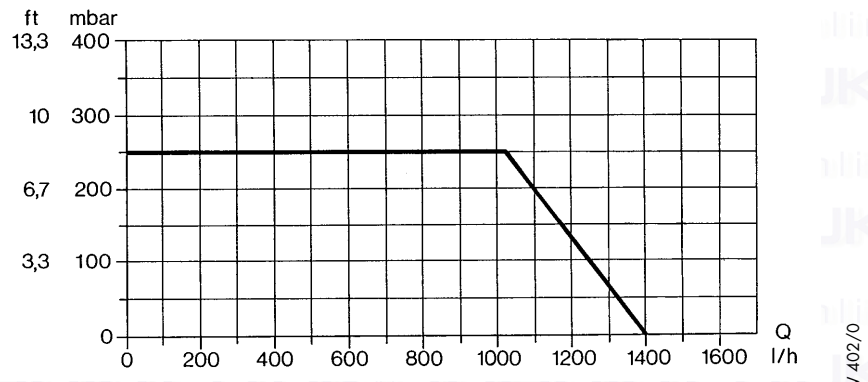

fig. 9

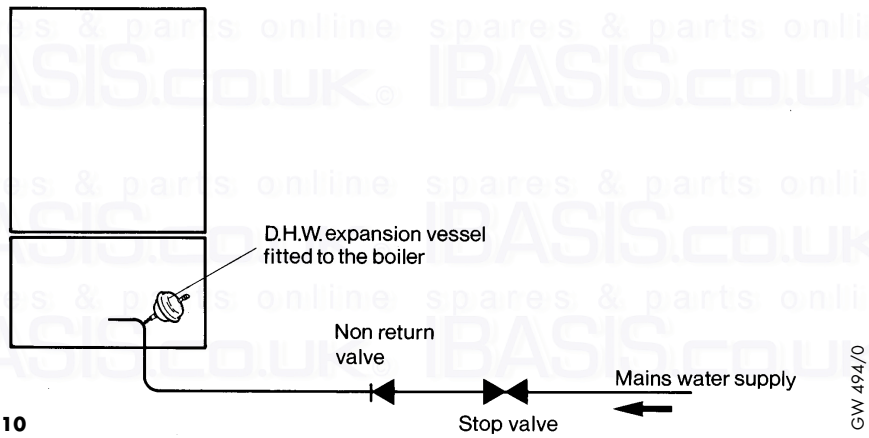

fig. 10

4. Boiler installation sequence

4.1 General

The boiler should be mounted on a flat and vertical area of wall of sufficient area for the boiler plus the required minimum clearances for installation and servicing (fig. 11). These are shown on the installation template supplied with the boiler and are:-

5 mm either side of the boiler
150 mm below the boiler
165 mm on top of the boiler
500 mm in front of the boiler *

* This clearance is only required to enable easier access to the boiler for servicing and may be provided by an openable door, etc.

NOTE: If the boiler is to be fitted in a timber framed building, it should be fitted in accordance with British Gas publication reference DM2 'Guide for gas installations in timber framed housing.'

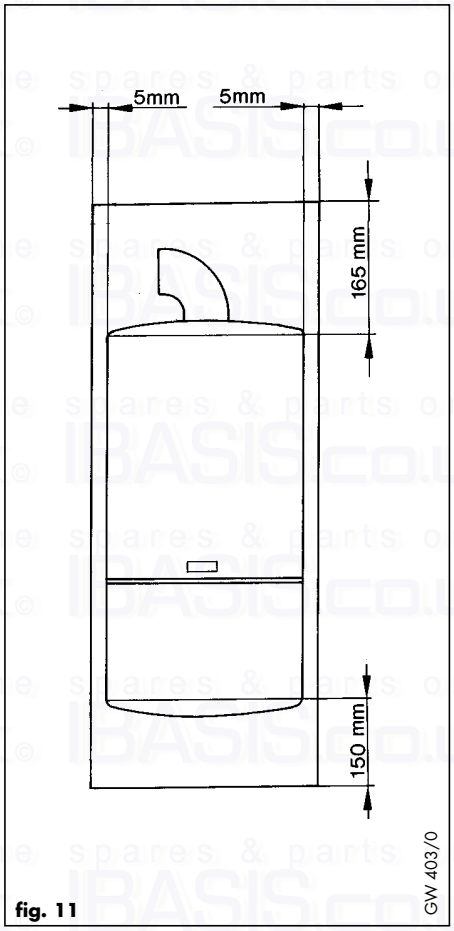

fig. 11

4.2 Boiler delivery

ECOmax is delivered in three packs:

a. the carton containing the boiler
b. separately boxed connection group (Accy No.9313)
c. separately boxed flue accessory, either:

- 1m horizontal flue accessory (Accy No. 300931); or
- vertical flue accessory (Accy No. 300945)

4.2.1 Installation accessories

Table 3 lists the standard and optional accessories which are available for ECOmax.

4.2.2 Unpack the boiler (fig. 12)

Open the boiler carton and remove:

a. protective cardboard sheet
b. top and bottom decorative panels
c. polystyrene packaging

NOTE: Care should be taken not to scratch the white powder coated surface of the boiler casing.

Packed in the boiler carton are the following:

- boiler installation template
- boiler hanging bracket
- gas service valve and adaptor
- fixing screws and wallplugs
- installation and user instructions

Table 3: Installation Accessories

Standard Accessories	Accy. No.	
1) Pre-assembled connection group incl. isolating valves (flow and return), pressure relief valve, cold and hot water connections	9313	
2) Air/flue duct assembly incl. terminal (horizontal)	300931	
Optional Accessories	**Accy. No.**	
3) Air/flue duct assembly incl. terminal (vertical)	300945	
4) Pitched roof adjustable roof tile	9076	
5) Flat roof penetration collar	9056	
6) Extension: (1 m) for the standard air/flue duct assembly (optional extra)	300923	
7) Additional 90 ° elbow	300934	
8) Additional 45 ° bends (pair)	300949	
9) Internal flue fixing kit	8098	
10) Pipe cover accessory	8099	

4.3 Preparation of boiler location

4.3.1 Select position of boiler.

Refer to Section 3.2 `Boiler Location' for information regarding siting the boiler. In general the boiler must be positioned such that:

- there is adequate space around the boiler for service and maintenance
- the boiler can be correctly flued, i.e. the flue terminal position is sited in accordance with Section 3.4.1 and the air / flue duct can be installed in accordance with the flue installation instructions supplied.
- all necessary pipework can be connected, including the pressure relief valve discharge pipe and the condensate drain.

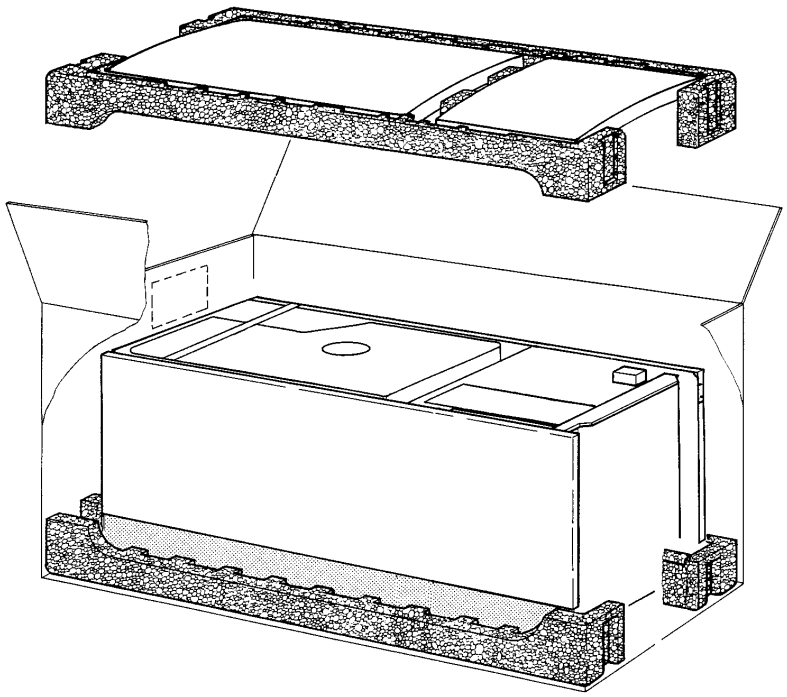

fig. 12

4.3.2 Using the boiler template (fig. 13)

4.3.2.1 Once a suitable location has been chosen, fix the paper installation template on the wall ensuring that the centerline of the template is vertical using a spirit level or plumb line.
The template shows the positions of the fixing holes for the boiler hanging bracket and connection group. The template also shows the position of the flue exit hole, for use where the air flue duct is to be installed directly to the rear of the boiler, e.g. where the boiler is installed on an outside wall and the flue terminates directly behind.

4.3.2.2 Mark on the wall the positions of the hanging bracket (2) and connection group fixing holes (3). Drill two holes Ø 10 mm for the hanging bracket, and similarly drill three holes Ø 8 mm for the connection group. (Note: Use the alternative fixing holes where necessary).

4.3.2.3 Rear exit flue.
Mark the position of the centre of the flue duct and its circumference, e.g. by drilling through the template (1).

4.3.2.4 Other flue options.
Refer to the installation instructions supplied with the flue accessory for detailed instructions on other flue options such as vertical RSF flues, flue runs to the side of the boiler and the use of additional flue elbows and bends etc.

4.3.2.5 Remove the template from the wall and plug the drilled holes using the wallplugs supplied.

4.3.3 Fitting the boiler hanging bracket and connection group.

Secure the hanging bracket and connection group securely to the wall using the screws supplied. (If the condition of the wall is poor it may be necessary to use additional or alternative fixings to ensure adequate support).

NOTE: If the boiler is to be fitted in a timber framed building ensure that the brackets are secured to a substantial part of the timber frame capable of taking the weight of the boiler.

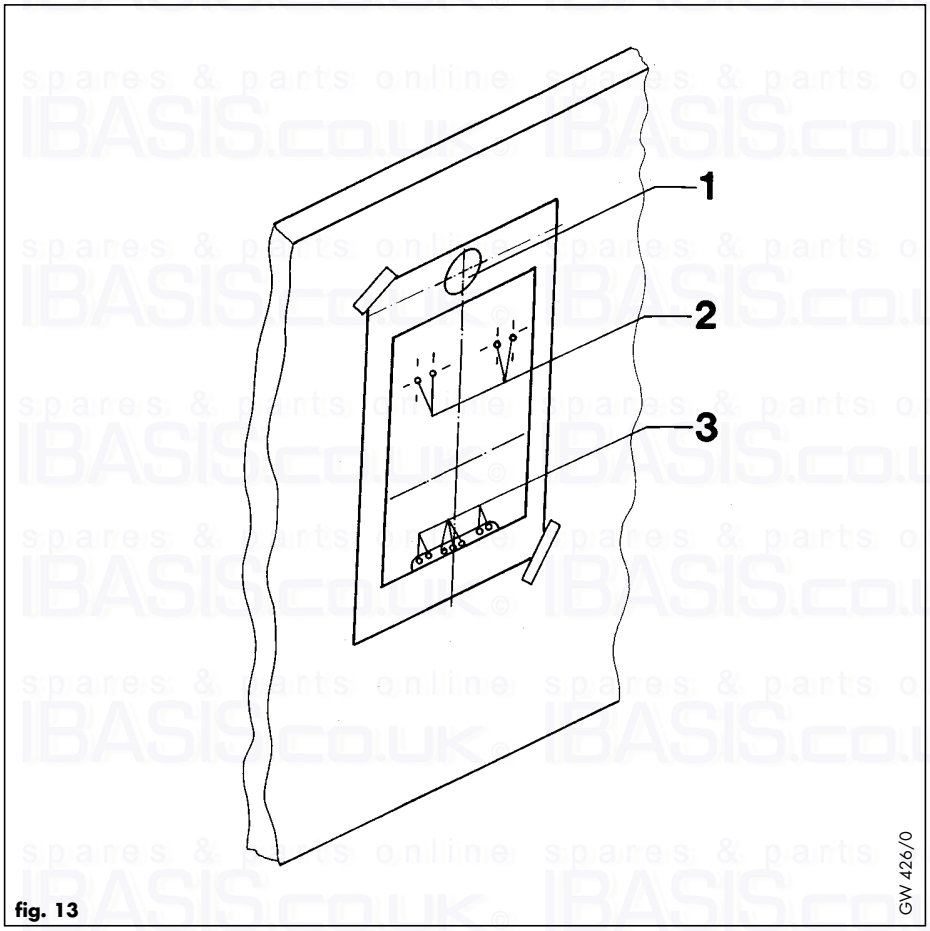

fig. 13

4.4 Pipework connections (fig. 14)

Figure 14 shows the central heating, domestic hot water, mains cold water and pressure relief valve connections.

4.4.1 Central heating flow and return

Before connecting the heating circuit to the connection group, all pipework and radiators must be thoroughly flushed to remove any installation debris. Connect the flow and return pipes to the central heating service valves (8) and (9) on the connection group using compression adaptors.

4.4.2 Cold mains water inlet and hot water outlet

Flush out all foreign matter from the mains supply pipe before connecting to the boiler.

Connect the mains water supply (3) and hot water outlet pipes (4) to the 15 mm compression connections provided.

Note: The boiler has a maximum domestic water working pressure of 10 Bar. If the cold mains supply pressure exceeds 10 Bar, a pressure reducing valve must be fitted to the cold water inlet.

4.4.3 Pressure relief valve discharge

The connection group contains the pressure relief valve required for a sealed system (5). Connect a discharge pipe not less than 15 mm diameter to the Rc 3/4 outlet of this valve using a compression adaptor.

This discharge pipework should be as short as possible and installed with a continuous fall away from the boiler. The pipe should terminate in a position which ensures that any discharge of water or steam from the valve cannot create a hazard to persons in or about the premises, or damage to any electrical components or external wiring, and the point of discharge should be clearly visible. The discharge must not terminate above a window, an entrance or any type of public access. The installer must consider that the pipe could discharge boiling water.

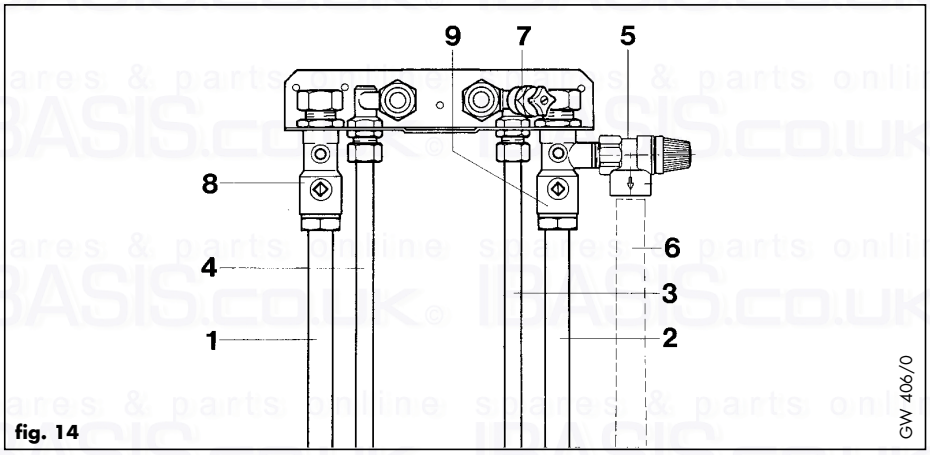

fig. 14

Key:

1 CH Flow pipe
2 CH Return pipe
3 Cold Mains water supply
4 DHW outlet
5 CH Pressure relief valve (PRV)
6 PRV discharge pipe
7 Cold Mains water service valve
8 CH Flow service valve
9 CH Return service valve

spares & parts online IBASIS.CO.UK

4.5 Installing the flue system

At this stage install the flue system (refer to separate air/flue duct installation instructions).

4.6 Mounting the boiler

4.6.1 Preparation (fig. 15)

Remove the boiler from the carton.

Lay the boiler on its back and remove the four plastic sealing caps from boiler flow and return and domestic water connections.

On the connection group close the CH service valves (8), unscrew the union nuts (6) and remove plastic sealing plugs.

Close cold mains water service valve, unscrew union nuts (4), remove and discard plastic sealing plug. (Take care not to lose sealing washers!)

Slide the 22 mm nuts (6) and olives (5) over the flow and return tails of the boiler as far as possible. Fix these temporarily in this position using tape or similar.

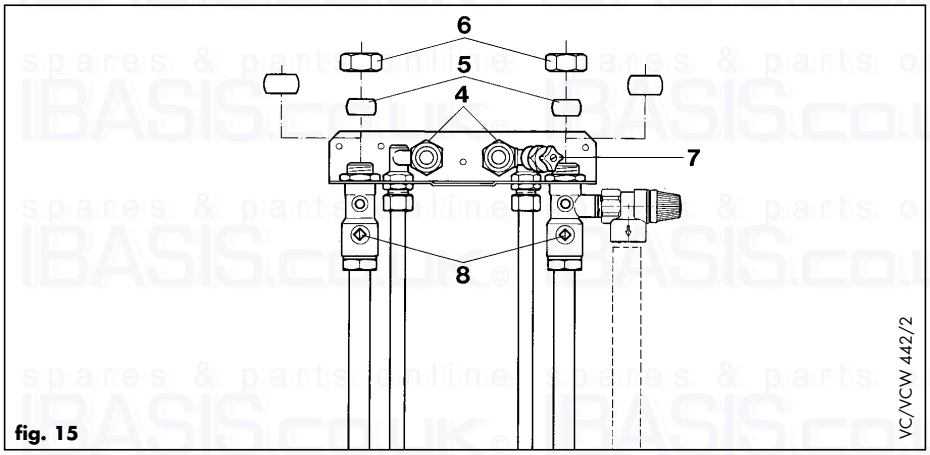

fig. 15

4.6.2 Fitting the boiler (fig. 16)

Lift the boiler up to the wall so that it is slightly above the connection group.

Lower the boiler slowly onto the connection group so that:

- the flow and return tails of the boiler engage into the top of the CH service valves
  AND
- the cross member at the top rear of the boiler slots into the hanging bracket.

Remove the tape (or similar) used to secure the nuts and olives on the flow and return tails, slide these down onto the CH service valves and tighten.

Align the cold and hot water connections with the boiler, fit the sealing washers and tighten. (If necessary adjust the position of the hot and cold water connection pipes by loosening the locking nuts on the connection group).

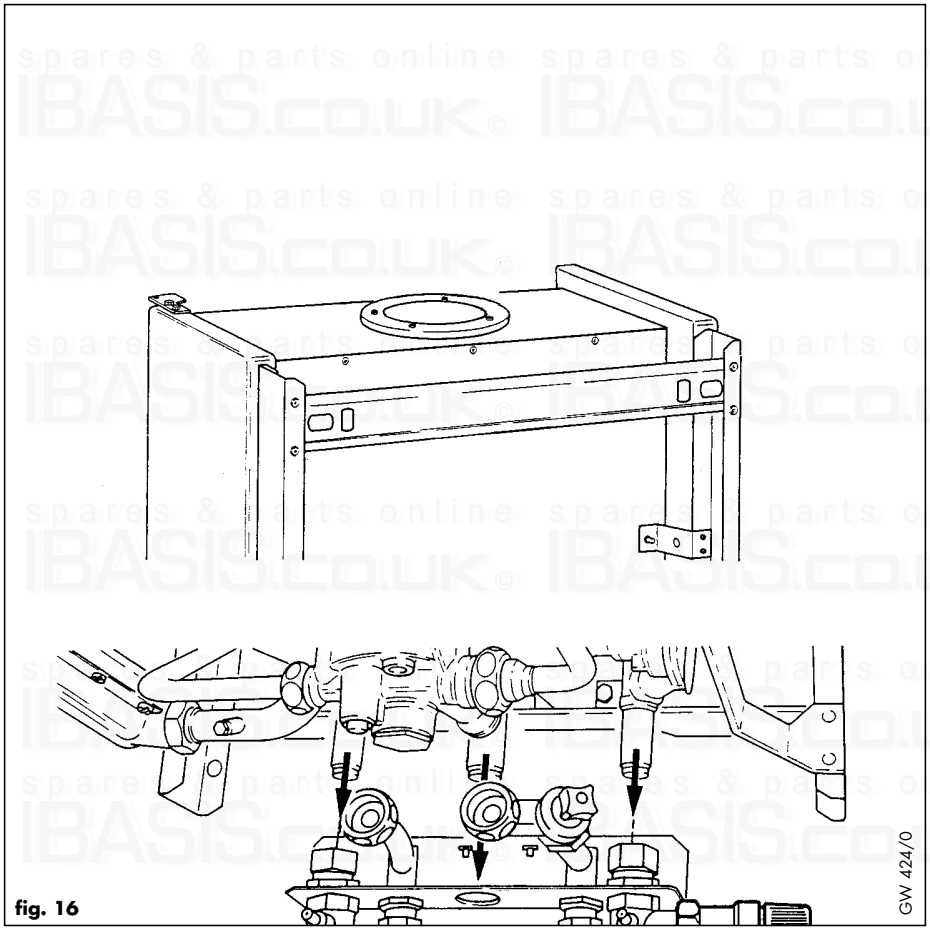

fig. 16

4.6.3 Gas supply (fig. 17)

The boiler is supplied with a 20 mm x 15 mm gas service valve (7). Fit the 20 mm compression fitting to the boiler gas inlet (3) and tighten. Install a gas supply pipe not less than 15 mm diameter and connect to the gas service valve. (Ensure the gas supply pipework is adequately sized such that a 20 mbar - 8" w.g. – gas pressure is available at the boiler inlet at full flow rate). Tighten all union connections.

4.6.4 Condensate discharge (fig. 18)

Insert the boiler condensate drain (1) by at least 50 mm into a condensate discharge pipe (2). The condensate discharge pipe should be minimum 19 mm internal diameter and be made of an acid resistant material (e.g. plastic overflow pipe).

The discharge pipe from the boiler condensate drain must have a continous fall and preferably be installed and terminated within the building to prevent freezing.
The discharge pipe must terminate in a suitable position, e.g.:-

ⓐ connecting into the internal stackpipe of the property (at least 450 mm above the invert of the stack). A trap giving a water seal of at least 75 mm (3) should be incorporated into the pipe run, and there must be an air break (4) in the discharge pipe upstream of the trap.

ⓑ connecting into the internal discharge system of the property such as a sink or washing machine waste. The connection should be upstream of the sink / washing machine waste trap. (If the connection is downstream of the waste trap then an additional trap giving a water seal of at least 75 mm (3) and an air break (4) must be incorporated into the pipe run, as (a)).

ⓒ terminating in a gulley (5) below grid level (6) and above the water level.

ⓓ at a condensate absorption point ('soakaway')-7.

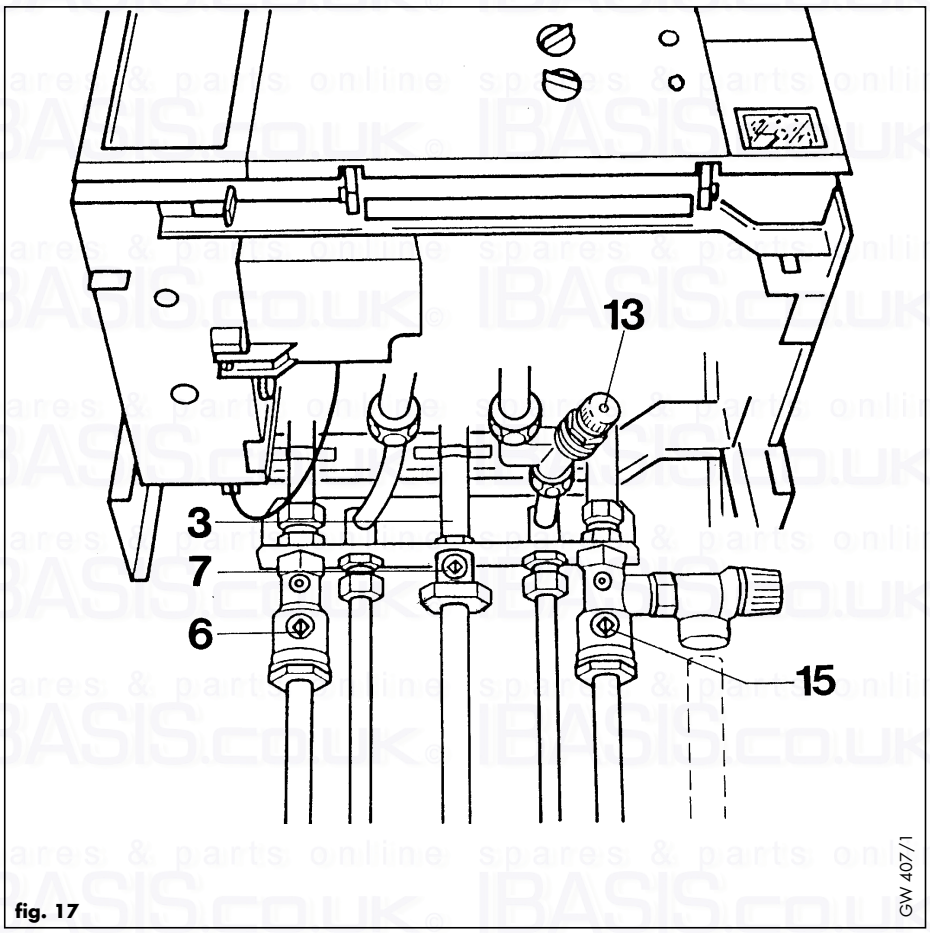

fig. 17

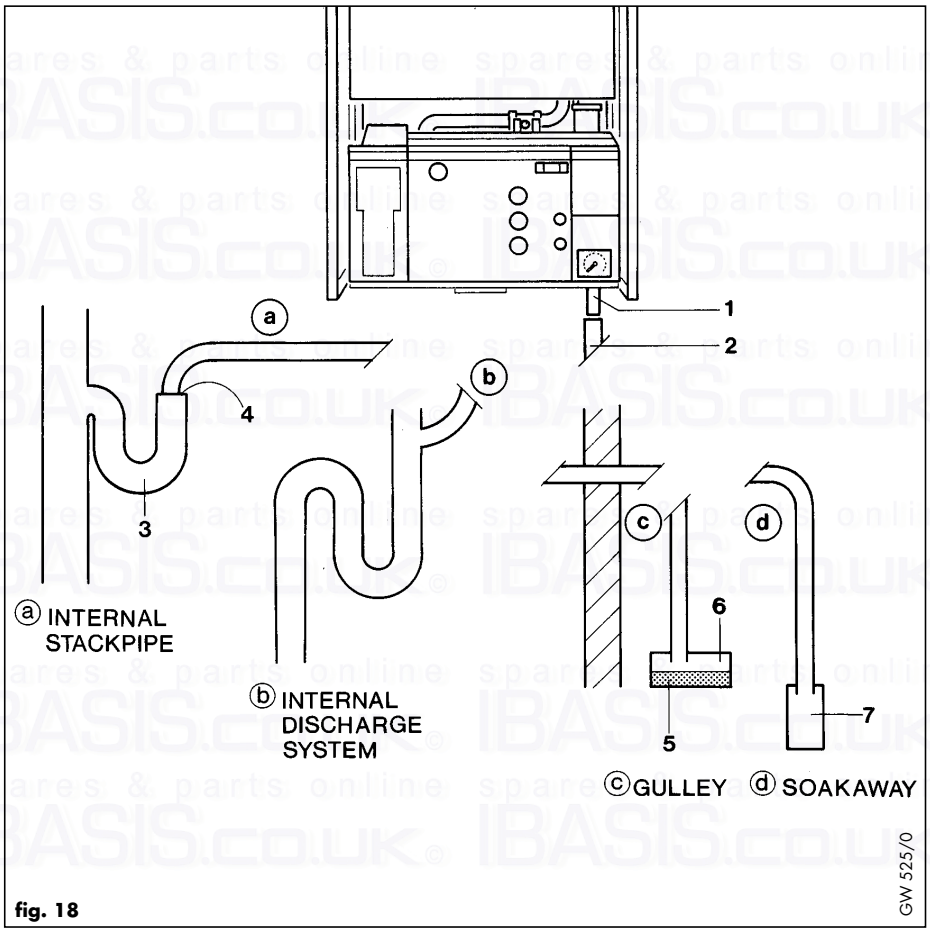

fig. 18

Note:
If it is necessary to install any condensate pipework externally, then it should be kept as short as possible, be insulated with waterproof insulation and have a continuous fall of at least 2.5 ° (i.e. 45mm fall for every metre length).

Refer to the British Gas publication `Guidance notes for the installation of domestic condensing boilers' for further information.

Before operating the boiler the condensate trap on the boiler (1, fig. 19) must be filled with water as described in Section 5.6 `Filling condensate trap'.

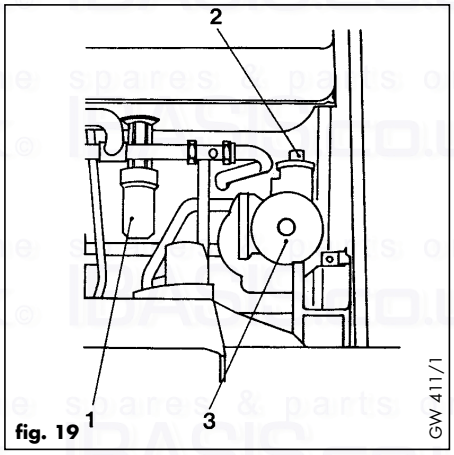

fig. 19

4.7 Connecting the flue assembly to the boiler

(Note: Refer to the air/flue duct installation instructions for full details of installation of the air flue duct. This Section is included for further reference only, e.g. in case the boiler has to be removed from the wall.)

4.7.1 Horizontal Flue

Place a 95 mm diameter x 88 mm long air duct clamp (1, fig. 20) over the air duct.

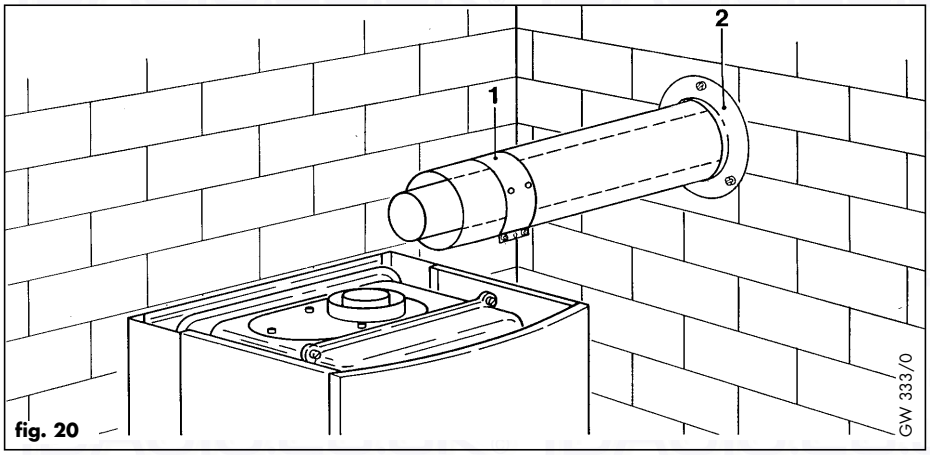

fig. 20

Push the sliding sleeve (1, fig. 21) over the cut end of the flue duct.

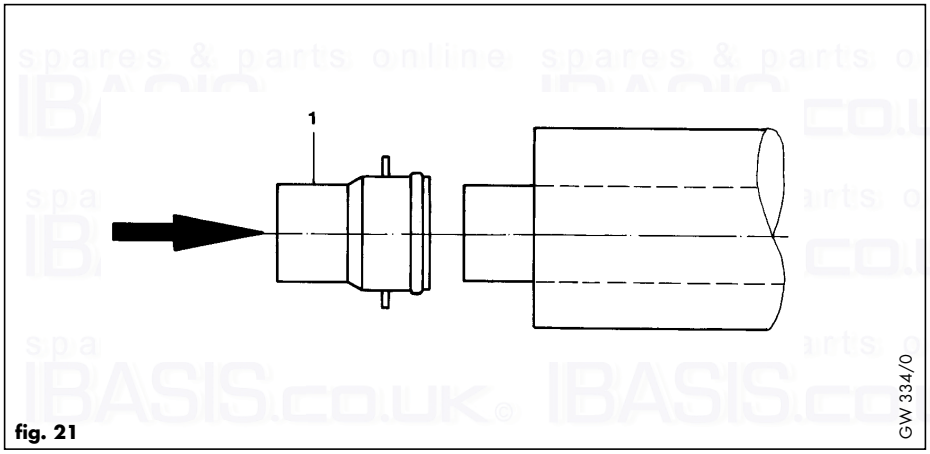

fig. 21

Fit the flue elbow to the boiler by inserting the spigot of the flue elbow into the flue outlet socket of the boiler. When correctly fitted the air duct of the flue elbow should butt up to the boiler air duct.

Line up the flue elbow socket with the air/flue duct and pull back the sliding sleeve so that it engages into the socket of the flue elbow (fig. 22). The sliding sleeve must penetrate the flue elbow socket such that there is at least 20 mm engagement at both ends of the sliding sleeve (fig. 23)

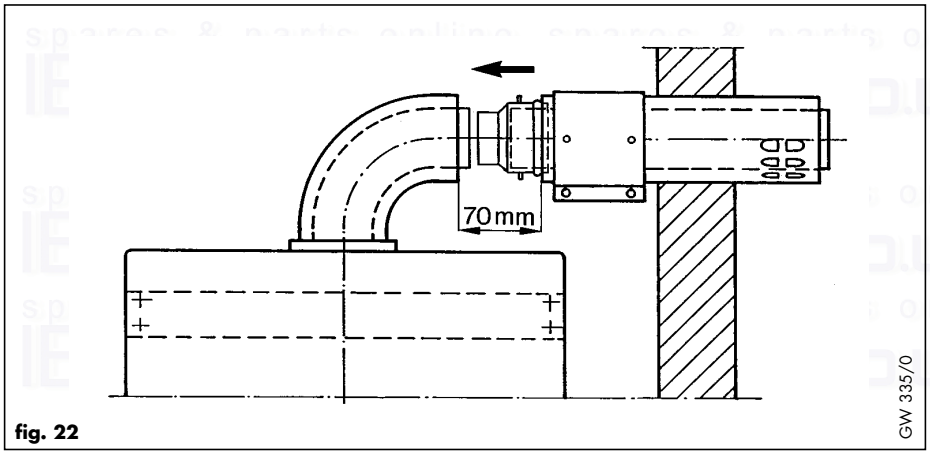

fig. 22

Ensure that the air/flue duct and terminal assembly is not displaced through the wall, and that the terminal assembly projects 90 mm as shown in fig. 23.

Fit the 95 mm diameter x 25mm long air duct clamp (4, fig. 24) over the elbow and the boiler flue outlet spigot. Tighten the two screws (1,fig. 24).

Slide the 88 mm long air duct clamp (5, fig. 24) back onto the elbow so that it is located centrally over the 70mm gap between the elbow and the flue assembly. Tighten the two screws (2, fig. 24).

Screw the clamps to the air duct using the sheet metal screws (3, fig. 24).

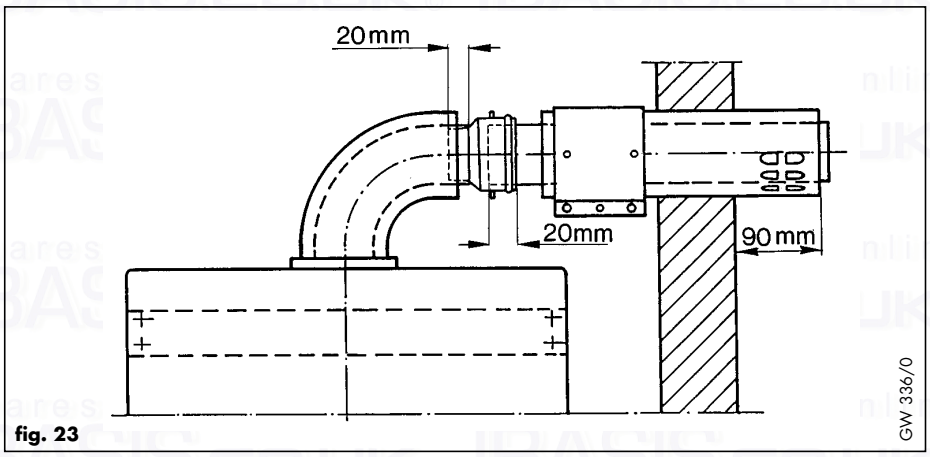

fig. 23

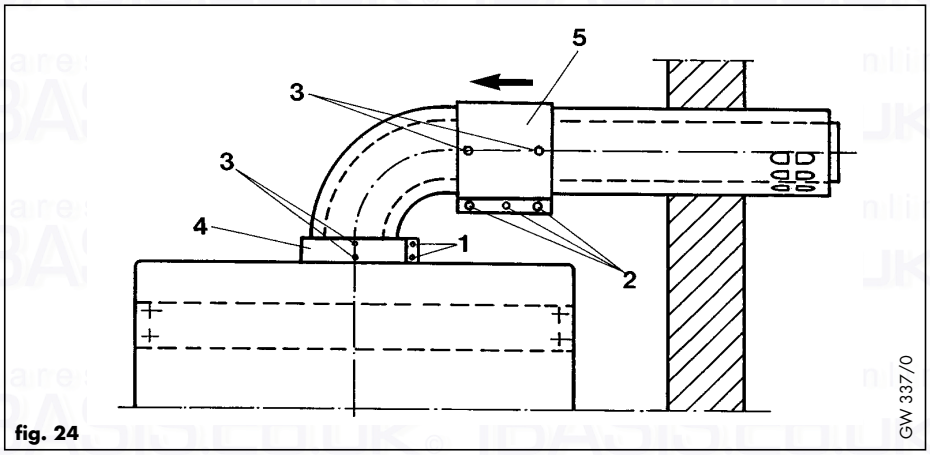

fig. 24

4.7.2 Vertical Flue

Lower the flue assembly and engage the flue duct spigot into the socket of the boiler flue outlet.

With correct assembly there will be a gap between the boiler and flue assembly of 10 mm (fig. 25).

Fit the 55 mm long x 95 mm diameter air duct clamp (3, fig. 26) over the gap between the air duct of the boiler and the bottom of the air/flue duct and terminal assembly.

Tighten the clamp screws (1, fig. 26).

Secure the clamp to the boiler air duct using the sheet metal screws provided (2, fig. 26).

Note: The air duct clamp must not be screwed to the bottom of the air flue duct and terminal assembly. The air/flue duct and terminal assembly must be able to slide in the air duct clamp to absorb any slight movements in the roof structure.

Ensure that the air/flue duct and terminal assembly is aligned vertically and secure from inside using the fixing bracket (1, fig. 27) over the air/flue duct at a convenient position.

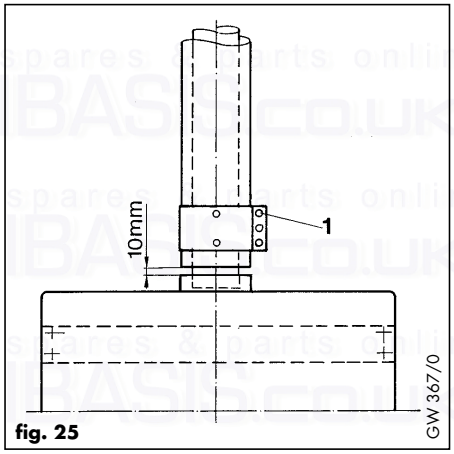

fig. 25

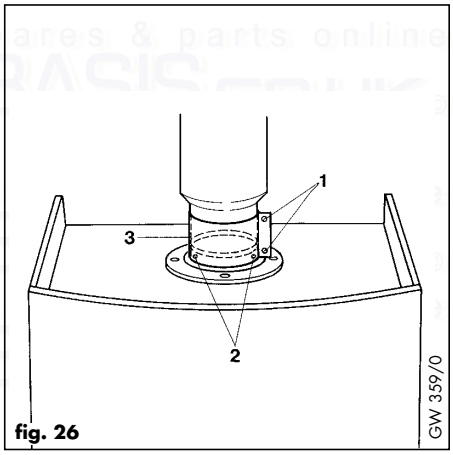

fig. 26

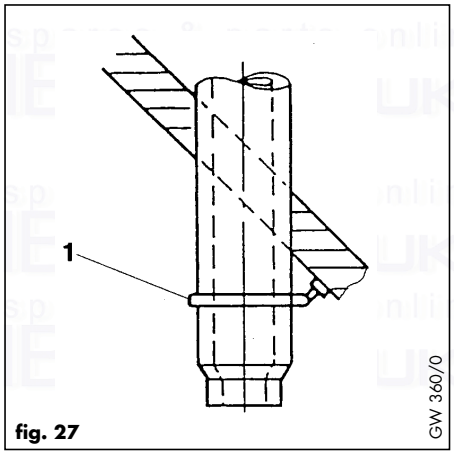

fig. 27

4.8 Electrical installation

4.8.1 General electrical requirements

All electrical work shall be carried out by a competent person and shall comply with the current edition of the IEE regulations (BS7671).

The boiler is supplied for connection to a 230V~ 50Hz supply fused at 3A rating. Connection to the mains supply should be made via a fused 3 pin plug to an unswitched, shuttered socket, both complying with the requirements of BS1363. (Alternatively, connection may be made via a 3 Amp fused double pole isolator having a contact separation of at least 3mm in all poles and supplying the boiler and controls only).

The point of connection to the mains should be readily accessible and adjacent to the boiler. A 3 core flexible cord according to BS6500 tables 6, 8 or 16 (3x0.75 to 3x1.5 mm²) should be used.

Warning: This appliance must be earthed

4.8.2 Connecting to mains supply

Slacken front panel fixing screw (1, fig. 28) and lower front panel. Remove terminal box cover by undoing screws (1, fig. 29)

Connect the power supply cord as follows:-

green / yellow (earth) wire boiler terminal ⏚

Blue (neutral) wire..... boiler terminal N

Brown (live) wire..... boiler terminal L

NOTE: Do not use boiler terminal connections 7-8-9!

To enable easier access to the wiring terminals it is possible to lift the terminal strip (1, fig. 30) off the two locating pins (2, fig. 30). After all connections have been made, the terminal strip must be relocated onto the two pins.

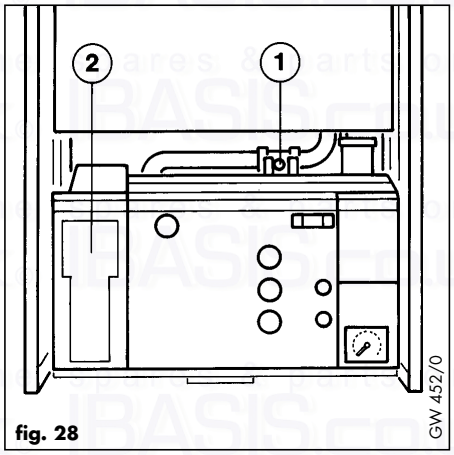

fig. 28

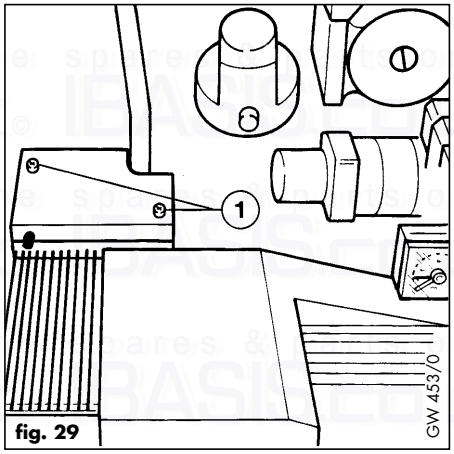

fig. 29

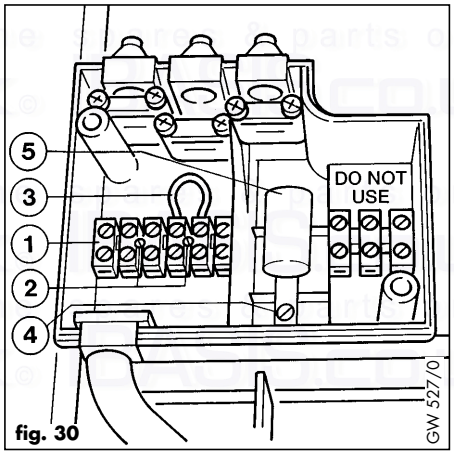

fig. 30

IMPORTANT Ensure that all cords pass through the terminal box entrance grommets and are securely fixed by the cable clamps. Ensure that the power supply cord is connected such that the current carrying conductors become taut before the earthing conductor should the supply cord slip from the cable clamp.

Refit the terminal box cover after completition of all electrical connections.

4.9 Controls

4.9.1 External electrical controls

The boiler terminals 3,4 and 5 for connecting external controls such as a timeswitch and/or room thermostat.

Terminals 3 and 4 are linked together when the boiler is supplied. If external controls are used, this link (3, fig.30) must be removed, and the controls connected across terminals 3 and 4.

Terminal 5 is an additional neutral connection for external neutrals such as from the anticipator of a room-thermostat.

Refer to Section 4.9.2 for full connection details.

4.9.2 Connection of external electric controls

4.9.2.1 Connection details for programmable thermostat and boiler terminal strip.

Fig. 31 shows the connection details where a programmable thermostat (time switch with built-in room thermostat) is used to control the boiler. (Important: The arrowed numbers indicate connection into the relevant terminal in the boiler terminal strip).

4.9.2.2 Connection details for external time switches and boiler terminal strip.

Fig. 32 shows the connection details where a time switch is used without a room thermostat to control the boiler. (Important: The arrowed numbers indicate connection into the relevant terminal in the boiler terminal strip).

If a room thermostat is to be connected in addition to a time switch the wire between the time switch `ON' terminal and boiler terminal 4 should be broken by the contacts of the room thermostat (see Schematic layout, fig. 33)

Connection details for programmable thermostat and boiler terminal strip

Vaillant Calotrol (VRT 9083 and VRT 9084)						N 1	L 2	3 3	4 4	
ACL Drayton Digistat 2 and 3							3 1	2	4 3	
ACL Drayton PT110, PT170	N N	L L				1	2	4 3	3 4	
ACL Drayton Lifestyle CT171, CT172, PT271, PT371	N N	L L				3 1	2 OFF	4 3 ON	4	
Danfoss Randall TP2, TP3, TP4, TP5							3 1	2	4 3	
Honeywell CM51, CM41							3 A	4 B ON	C OFF	
Landis & Gyr REV 10 and 21								3 Q1	4 Q2	
Potterton Myson Pet 1						2 OFF	3 L	4 1 ON	5 N	⊕ C

fig. 31

Connection details for external time switches and boiler terminal strip

ACL Drayton Lifestyle LP711						N N	L L	3 1	2 OFF	4 3 ON	4
ACL Drayton Switchmaster 300 (Please note: Remove Link N-2 and L-4)						N N	L L	4 1 ON	2	3	3 4
Grässlin Towerchron Dt71, T200l						N N	L L	1	2	3	4 4 ON
Honeywell ST6100						N N	L L	3 1	2	3	4 4
Honeywell ST7000B (Battery operated)								3 L	2 OFF	4 3 ON	4
Horstmann 425 Coronet Channel Plus, H17, H11	⊕ E	N N	L L	1	2	3	4 4 ON	5	6 OFF	
Landis & Gyr RWB100, 152, 170						N N	L L	1	3 2	3	4 4
Potterton Myson EP400l, EP500l		N N	L L	1	2 OFF	3	4 4 ON	3 5	⊕ E	
Danfoss Randall 103, 103E, 103E7						4 1 ON	2	3 3	⊕ E	N 5	L 6
Danfoss Randall Set 1E, TS975	⊕ E	N N	L L	1	2	3	4 4 ON	3 5	6 OFF	

fig. 32

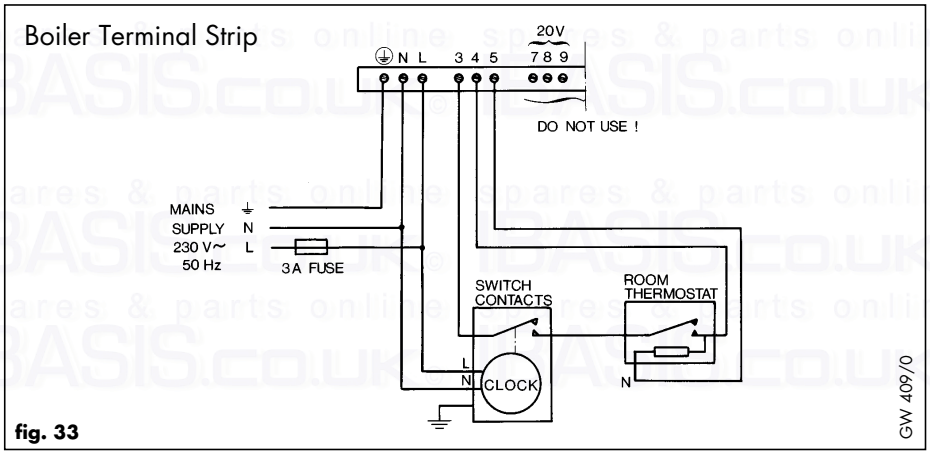

fig. 33

4.9.3 Thermostatic radiator valves

The boiler has a built-in automatic bypass valve making it ideal for use in systems with thermostatic radiator valves (no separate system bypass is required).

For optimum fuel economy it is recommended that where TRVs are used they are used in conjunction with a programmable roomstat or separate timer and room thermostat to ensure complete boiler shutdown when the heating demand is satisfied. (The radiator in the room containing the room thermostat should not be fitted with a TRV).

4.9.4 Frost protection

The boiler has an internal frost thermostat which is designed for protection of the boiler.

To protect remote or exposed parts of the heating system or property additional frost protection measures must be taken such as the installation of an external frost thermostat. This frost thermostat should be connected across the boiler terminals 3 and 4, in parallel with any external heating controls.

4.9.5 Circulating pump

The boiler incorporates a built-in circulating pump that is fully pre-wired. (No additional wiring is necessary). The pump incorporates an automatic overrun period after the boiler switches off.

4.9.6 Anti-cycling `economiser' control

The boiler incorporates a built in anti-cycling control to ensure that energy wasteful short cycling of the boiler cannot occur. This control prevents the boiler from re-igniting for a pre-set period of 5 minutes after central heating operation. (The hot water operation is unaffected by this control and hot water can be drawn at any time).

(To temporarily override the anti-cycling control turn the central heating control to the 'Hot Water only' position and then back to the 'Heating and Hot Water' position.)

5. Commissioning

5.1 Preliminary electrical checks

Check the electrical installation by carrying out short circuit, earth continuity and resistance to earth tests and a check for correct polarity.

5.2 Gas supply

The complete gas installation including the gas meter must be inspected, tested for soundness and purged in accordance with BS 6891.

The gas supply to the boiler can be purged by slackening the gas service valve beneath the boiler (1, fig. 34). Ensure that there is adequate ventilation, extinguish naked flames and do not smoke whilst purging.

After purging, the gas service valve connection must be re-tightened and tested for soundness.
(The boiler itself does not require purging as this will be done by the automatic burner sequence control).

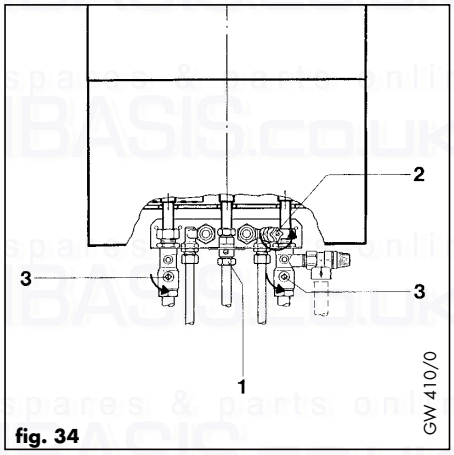

fig. 34

5.3 Water supply

Open all domestic hot water taps supplied by the boiler, turn on the mains water supply to the boiler and open the mains water isolating valve below the boiler (2, fig. 34).

Water will now flow through the boiler to the hot taps. Starting with the lowest tap supplied, turn the hot taps off one at a time until the hot water pipework is purged of air.

Check all hot and cold pipework for leaks.

spares & parts online IBASIS.CO.UK

5.4 Filling the heating system

The boiler primary circuit and the heating system should be filled using a filling method as described in Section 3.7.2.

Ensure that the boiler CH service valves (3, fig. 34) are open.

Partially open the filling valve and allow water to enter the system. Starting with the lowest radiator, open the radiator air release until water (clear of bubbles) is emitted.

Repeat this at all radiators until the complete system is full, all air locks have been cleared and the boiler pressure gauge reads 1.5 Bar. Release any air from the pump by slackening the centre screw (3, fig. 35).

The boiler is equipped with an automatic air release valve. To allow this to vent the boiler, the cap on top (2, fig. 35) must be slackened by 1-2 turns. (This cap must be left slackened during boiler operation to ensure any residual air or system gases are released).

Check the heating system and boiler connections are sound.

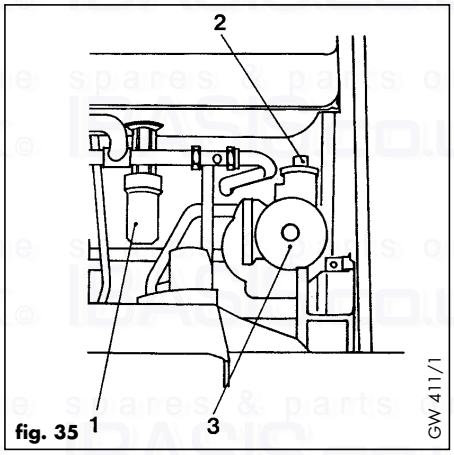

fig. 35

5.5 Initial system flush ('cold')

The whole of the heating system must be flushed out at least twice: once cold, and once hot as instructed later in Section 5.13.

Open all radiator or heating valves and boiler CH service valves and drain the heating system and boiler completely from the lowest points of the system via 1/2" BSP drain taps (opened full bore to remove any installation debris prior to lighting the boiler).

Refill the heating system as described in Section 5.4: Filling the heating system.

Check the operation of the pressure relief valve by rotating the knob on the valve.

5.6 Filling condensate trap

Remove the lower part of the condensate trap (1, fig. 35) by unscrewing and fill with water to about 10 mm from the top. Refit in boiler.

5.7 Initial lighting

- Check that the boiler combustion chamber (5, fig. 36) is correctly fitted.
- Ensure the cold water shut-off valve (13, fig. 37) is open by turning anti-clockwise.
- Open the gas service valve (7, fig. 37)
- Check that the CH service valves (6 and 15, fig. 37) are open.
- Check that all external heating controls are calling for heat.
- Switch on the electricity supply to the boiler.
- Set both the maximum hot water temperature control (4, fig. 36) and maximum radiator temperature control (3, fig. 36) to `9'.
- Turn the boiler on/off control (1, fig. 36) to `on'.
- Set the boiler central heating control (2, fig. 36) to the `Heating and Hot Water' position.

The boiler will now operate for central heating. Allow the boiler to run for a few minutes to clear any air remaining in the primary circuit.

(If the boiler should fail to light the diagnostic display - 8, fig. 36- will indicate fault code F:21. This usually indicates that the gas supply is turned off, or is not purged of air. Check gas supply, push red `Reset' button on front of control panel - 10, fig. 36 - and repeat lighting procedure).

- Set the boiler central heating control to the `Hot Water only' position. The boiler will now switch off.
- FULLY open a hot water tap. The boiler will now operate for hot water.

At this point the maximum domestic hot water flow rate can be adjusted if required.

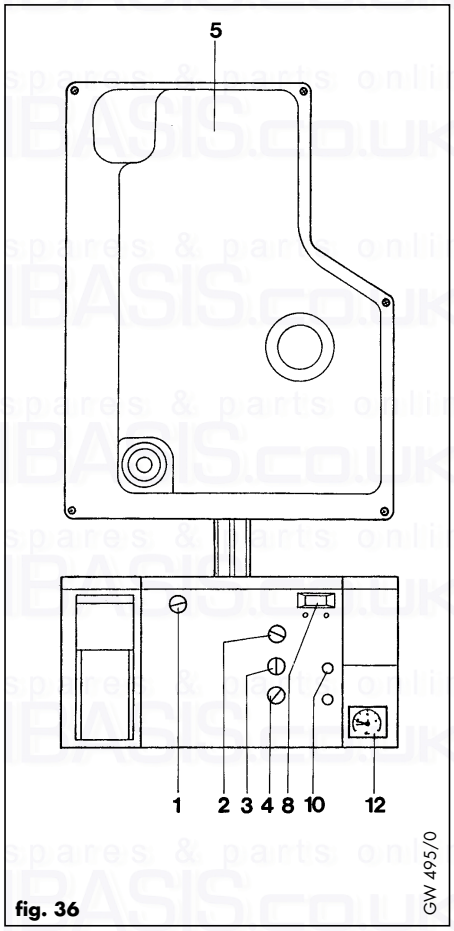

fig. 36

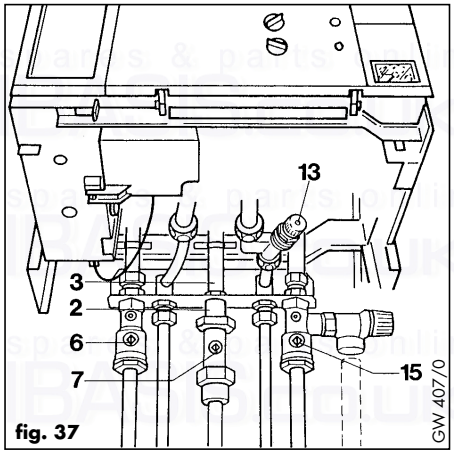

fig. 37

NOTE: The water flow limiter built into the boiler ensures that the maximum domestic hot water flow rate does not exceed the nominal setting (equivalent to a hot water temperature rise of 35 °C). Adjustment is only required if the user requires a higher temperature rise than this setting.

Turn the water flow adjusting screw (2, fig. 38) clockwise to decrease the flow from the tap until the temperature rise is at the desired level. Turn off the hot tap after completion of adjustment.

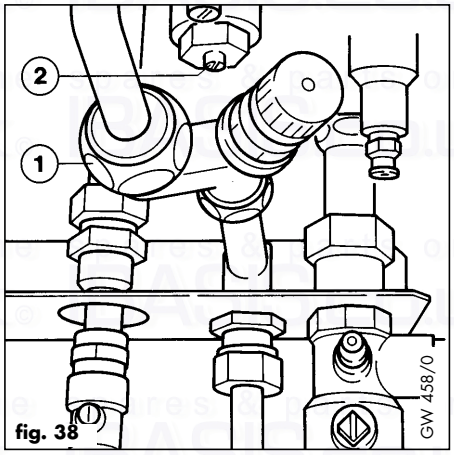

fig. 38

5.8 Gas inlet working pressure (fig. 39)

Check the gas inlet working pressure by slackening the sealing screw and attaching a U gauge to the inlet test point on the gas valve marked `PE'. Fire the boiler at full rate by opening a hot water tap. Check that the U gauge is reading 20 mbar.

(If the pressure is not 20mbar this should be investigated before continuing with the commissioning procedure. Lower pressures than 20mbar are indicative of an incorrectly sized or partially blocked gas supply).

Turn off the hot tap. Remove U gauge. Tighten the test point screw and test for soundness.

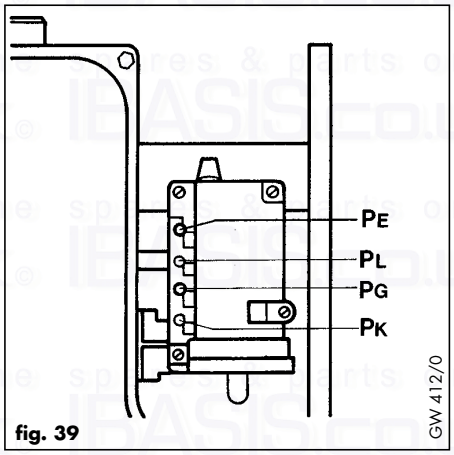

fig. 39

5.9 Adjusting the central heating output (range rating)

ECOmax is fully modulating for central heating, and it is therefore not necessary to range rate the central heating. The boiler operates at very high efficiency across its heat output range. However, even greater efficiency may be obtained by range rating the boiler, as follows:-

- Put the boiler into diagnostic mode by pushing the two buttons below the boiler display simultaneously until a `d' code is displayed (1 and 2, fig. 40).
  (For further information on how to use the boiler display refer to Section 8: Fault Finding)
- If code `d. 0' is not displayed, push the left hand button to step through the various D codes until the screen shows the `d. 0' code

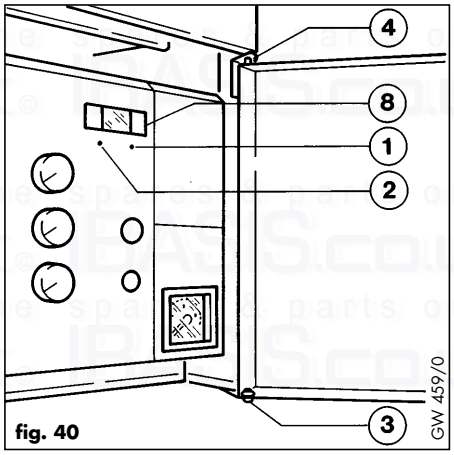

fig. 40

- Push the right hand button once. The display will now show the percentage range rating of the central heating (compared to the maximum nominal output for domestic hot water). (Note: The factory set maximum figure is 80)
- Remove screw (1, fig. 41) and lower control panel.
- Remove cover screw (2, fig. 42) to access the range rating potentiometer beneath.
- The central heating output can now be altered by inserting an electricians screwdriver into the potentiometer and turning. (See Table 4 for the required output settings).
- The selected rating will be displayed on the boiler display as adjustments are made.
- After setting, refit cover screw (2, fig. 42) and resecure control panel (1, fig. 41).
- Push both buttons under the boiler display simultaneously. The flow temperature will now be displayed.

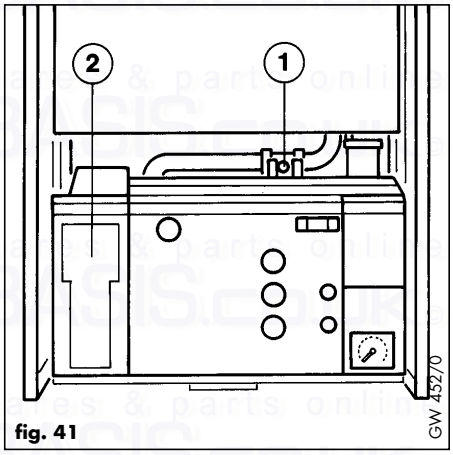

fig. 41

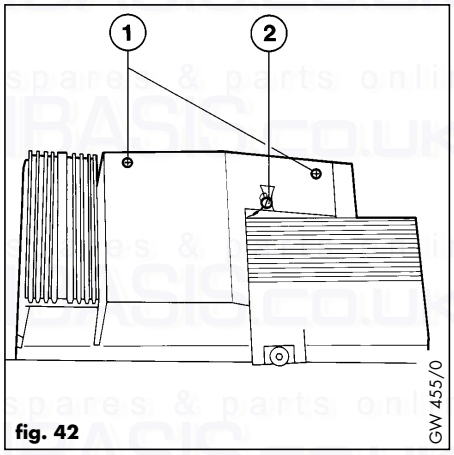

fig. 42

Table 4: Central Heating Output (Range Rating)

Range rating (Diagnostic Code d. Ø reading)	Output to Central Heating kW (Btu/h) (with return temperature = 60 °C)	
	VUW 236 E	VUW 286 E
80 (Maximum)	17.2 (58,700)	21.3 (72,700)
70	15.1 (51,500)	18.6 (63,500)
60	12.9 (44,000)	16.0 (54,600)
50	10.8 (36,800)	13.3 (45,400)
47 (Minimum)	9.9 (33,800)	12.3 (42,00)

5.10 Main burner pressure

The burner pressure on this boiler has been factory set and does not require adjustment. The main burner pressure may be checked in the following way:

- Ensure the maximum hot water temperature control (4, fig. 36) is set to '9'.
- Fully open a hot water tap to fire the boiler at full rate.
- Put the boiler into diagnostic mode by pushing the two buttons (1 and 2, fig. 40) below the diagnostic display simultaneously until a `d' code is displayed.
- Push the left hand button to step through the various `d' codes until the screen shows the `d.20' code.
- Push the right hand button once. The display will now show the main burner pressure in Pascals (100 Pa = 1 mbar).
- Check that the burner pressure is as shown in Table 5. (If the burner pressure is not correct within the tolerance shown contact Vaillant Ltd. Technical Department).
- Turn off the hot tap.

Table 5: Burner Pressure & Gas Rate

	VUW 236 E	VUW 286 E
Maximum Burner Pressure (DHW) (d. 20 reading)	300 Pa ± 30 Pa	300 Pa ± 30 Pa
Maximum Gas Rate (DHW)	2.38 m^3/h (84.04 ft^3/h)	2.96 m^3/h (104.52 ft^3/h)

- Push both buttons under the diagnostic display simultaneously. The flow temperature will now be displayed.
- Reset the maximum hot water temperature selector to the required setting (see Section 5.15).

5.11 Functional checks

5.11.1 Introduction

The boiler display (8, fig. 43) normally indicates the primary flow temperature. Whilst this display is showing the boiler has internally self checked and is operating normally. However, if desired, a functional check of the boiler DHW and CH operation may be carried out using the status mode of the built in diagnostics.

5.11.2 Functional check of DHW operation using built in diagnostics

- Set the boiler central heating control to the `Hot Water only' position
- Enter status mode by pushing the right hand diagnostic button once, e.g. with the tip of a ballpoint pen (1, fig. 43). The display should now show `S.0'
- Turn on a hot tap and draw water at a high rate.
- The display will now step through the following codes:
- S.10 - calling for operation: DHW. (display duration: 1 sec)
- S.11 - fan running and proving (display duration: 4 -5 secs)
- S.13 - ignition (display duration: 10 secs max)
- S.14 - burner operation: DHW (display for duration of hot water draw off)
- Turn the hot water tap off. The burner should be extinguished and the display will now step through the following codes:
- S.15 - pump and fan overrun (display duration: 5 secs)

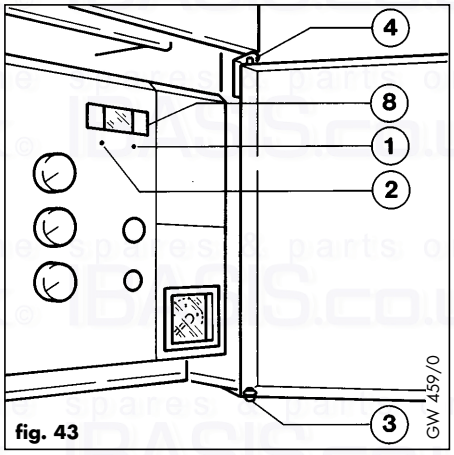

fig. 43

spares & parts online IBASIS.CO.UK

- S.17 - pump overrun
  (display duration: 20 secs to 80 secs)
- S.0 - no water demand

By stepping correctly through these codes the boiler has demonstrated correct functioning for DHW.

To exit from status mode push the right hand button once. (The display will now show the primary flow temperature).

5.11.3 Functional check of CH operation using built in diagnostics

- Set the boiler central heating control to the `Heating and Hot Water' position.
- Enter status mode by pushing the right hand diagnostic button once, e.g. with the tip of a ballpoint pen (1, fig. 43). The display should now show `S.0'
- Turn on all external controls (room thermostat, timer etc.) and turn maximum radiator temperature control to `9'
- The display will now step through the following codes:
- S.1 - fan running and proving
  (display duration: 4 -5 secs)
- S.3 - ignition
  (display duration: 10 secs max)
- S.4 - burner operation CH
  (display for duration of CH operation)
- Turn the external heating controls off. The burner should be extinguished and the display will now step through the following codes:
- S.5 - pump and fan overrun
  (display duration: 5 secs)
- S.7 (pump overrun)
  (display duration: 20 secs to 5 mins)
- S 30 (external controls satisfied)
- Turn the external central heating controls on. The following code will now be displayed:
- S.8 (anti-cycling `economiser' engaged)
  (display duration: 5 mins)

(Note: This control ensures that energy wasteful short-cycling of the boiler cannot occur, by preventing the boiler from igniting for a preset period of 5 minutes after central heating operation. The hot water operation is unaffected by this control and hot water can be drawn at any time. To temporarily override the anti-cycling control turn the central heating control to the `Hot Water only' position and then back to the `Heating and Hot Water' position).

By stepping correctly through these codes the boiler has demonstrated correct functioning.

To exit from status mode push the right hand button once. (The display will now show the primary flow temperature).

- Reset the maximum radiator temperature control to the required setting according to Section 5.15.

(For further information on how to use the boiler display refer to Section 8: Fault Finding).

5.12 Checking flame supervision device

Operate boiler and turn off gas supply at boiler gas service valve. The boiler should attempt to relight (sparking at ignition electrode visible through viewing window) for approximately 10 seconds before shutting down. Fault code F.21 will then be displayed on the control panel display. Open the gas service valve and press the reset button (10, fig. 36). The boiler should now relight.

5.13 Final system flush (`hot')

Allow the boiler and system to reach maximum temperature and check that the heating system is watertight. Turn the boiler off and rapidly drain both boiler and system while still hot.

Refill the system and release all air as described in Section 5.4. Release water from the system until the system design pressure of 1.2 bar is attained.

(The actual reading on the pressure gauge - 12, fig. 36 - should ideally be 0.5 Bar plus an additional pressure corresponding to the highest point of the system above the base of the boiler - 10 m head equals an additional 1 Bar reading on the pressure gauge. The minimum pressure should not be less than 1 Bar in any installation).

If the system is to be treated with an inhibitor it should be applied at this stage. Sentinel X100 is suitable for this purpose and should be applied in accordance with the manufacturers instructions.
Further information can be obtained from Sentinel, Grace Dearbom Ltd, Tel: 0151 495 1861.
(The boiler does not utilise aluminium in the water system and it is therefore not necessary to use any special inhibitors in the system.)

Disconnect the temporary filling connection.

5.14 Fitting case

Attach top door panel by slotting side clips (1, fig. 44) into holes in side panel and sliding panel down to secure.
Attach bottom door panel by locating onto top hinge pin (4, fig. 45) and inserting bottom hinge screw (3, fig. 45) down so that it also locates into the door.

5.15 Hand over to user

Set the maximum hot water temperature control to the required setting. (For normal circumstances the maximum hot water temperature should be set between 7 and 9. In hard water areas the formation of scale in the hot water system may be minimized by not tuning the control above the "▽" symbol).
Set the maximum radiator temperature control to the required setting.

Note: Operating the boiler at a lower setting will increase fuel saving. However, if the setting is too low then the radiators may not reach the desired temperature. For maximum fuel saving under normal circumstances the following settings may be used as a guide:

Spring and Autumn	5 – 6
Winter (normal)	6 – 7
Winter (severe)	7 – 9

Instruct the user in the safe and efficient operation of the boiler, in particular the function of:-

- the boiler on / off control
- the maximum radiator temperature control
- the maximum hot water temperature control
- the pressure gauge.

Advise the user that the boiler has an internal frost protection thermostat, and in very cold weather may therefore operate automatically to prevent damage to itself.

Show the user how to operate any external controls.

Explain to the user the importance of having the boiler regularly serviced annually by a qualified servicing company. To ensure regular servicing, it is strongly recommended that arrangements are made for a Maintenance Agreement. Please contact Vaillant Service Department (FREEPHONE 0800 318076) for further details.

Leave the user instructions in the purpose provided pocket on the front of the control panel (5, fig 46).

Leave the installation and service instructions with the user.

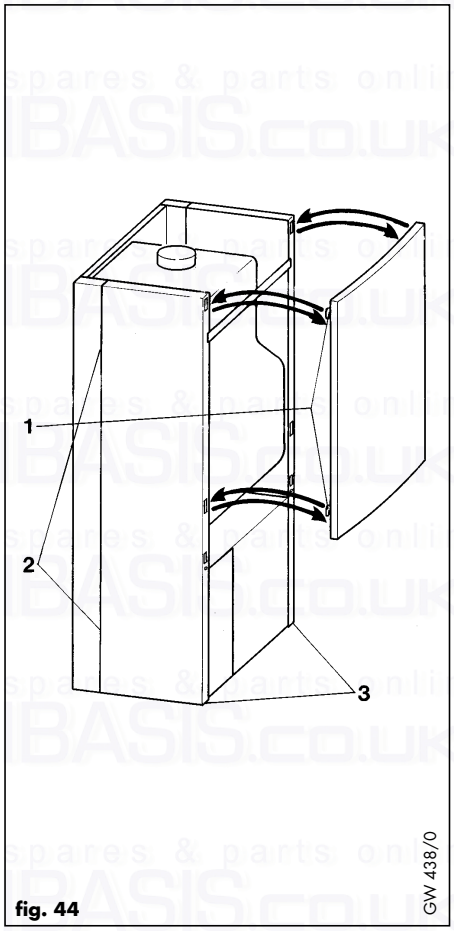

fig. 44

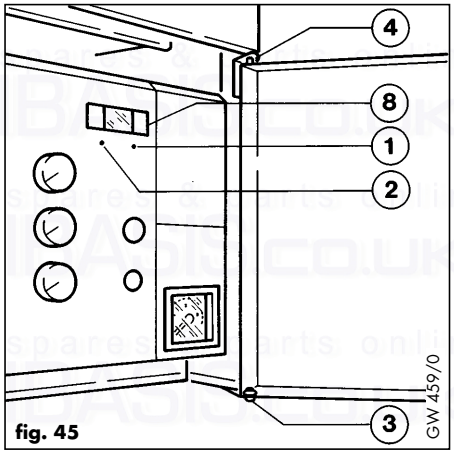

fig. 45

6. Servicing

To ensure the continued safe and efficient operation of the boiler it is recommended that it is checked and serviced as necessary at regular intervals. The frequency of servicing will depend upon the particular installation conditions and usage, but in general once per year should be adequate. It is law that all servicing work is carried out by a competent person (Corgi registered).

IMPORTANT:
Before starting any maintenance work:

- Isolate the mains electricity supply by disconnecting the plug at the socket outlet (if there is an isolating switch only remove the fuse from the switch).
- Turn OFF the gas supply at the gas service valve fitted to the boiler.
- Always test for gas soundness and always carry out functional checks after any service work and after exchanging any gas carrying component.
- Always check earth continuity, polarity and resistance to earth with a multimeter after any service work and after exchanging any electrical component.

Note: The boiler is fitted with a combustion analysis test point. A suitable combustion analyser can be connected to this point to establish the combustion performance of the boiler.

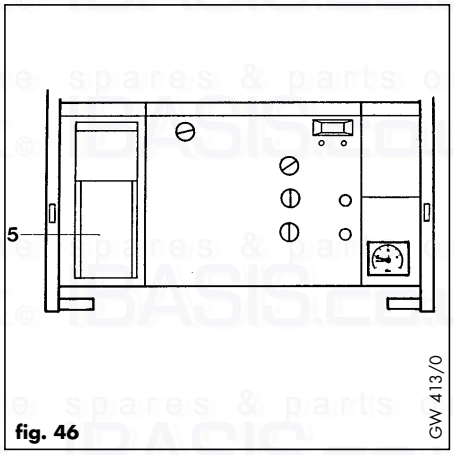

fig. 46

spares & parts online IBASIS.CO.UK

6.1 Initial Inspection

Before commencing any servicing or maintenance work, carry out an initial inspection of the system as follows:-

Inspect the flue, pipework and electrical connections for indications of damage or deterioration.

Inspect the air supply and ventilation arrangements of the installation, ensuring that the requirements of Section 3.5 are met.

Operate the boiler by turning the maximum hot water temperature control (4, fig. 47) to `9' and fully opening a hot water tap. Inspect the burner operation through the viewing window. Check that the flames are burning evenly over the full surface of the burner. Inspect for signs of excessive lifting or sooting.

Check the heating and hot water system, in particular the condition of the radiator valves, evidence of leakage from the heating system and dripping hot water taps.

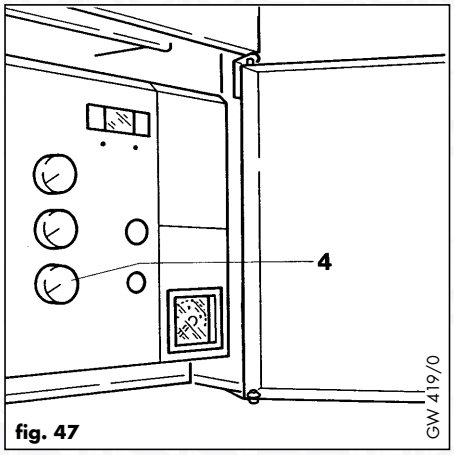

fig. 47

6.1.1 Functional checks of operation using the built in diagnostics

Refer to Section 5.11 for information on using the diagnostic feature to perform functional checks on the boiler.

6.2 Routine maintenance

6.2.1 Turn off the boiler (fig. 48)

- Isolate the electrical supply to the boiler
- Turn off the gas service valve (1)
- Turn off boiler CH service valves (2)
- Turn off DHW cold water service valve (3).

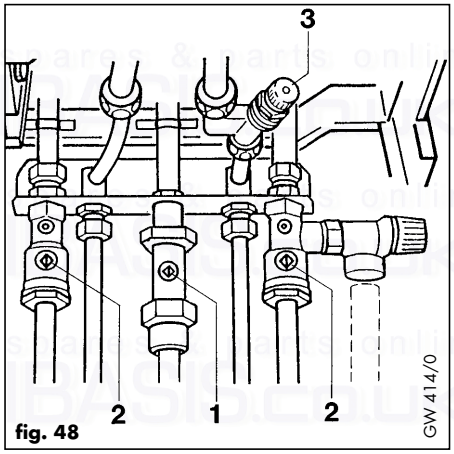

fig. 48

6.2.2 Remove front case

Remove bottom hinge screw (3, fig. 49) and pull the bottom door panel forward and down to release it from the top hinge pin (4, fig. 49).

Slide the top panel up to release retaining clips (1, fig. 50). Lift off top panel.

6.2.3 Inspect burner

Remove 5 combustion chamber retaining screws (3, fig. 51). Slacken 2 side panel spring retaining screws (2, fig. 51) and remove screw (4, fig. 51). Remove combustion chamber front cover.
Unplug the 2 electrical connections (1, fig. 52) from combustion fan.
Remove the 2 burner retaining clips (6, fig. 52) by lifting top of clip off of burner mounting plate.
The burner mounting plate (5, fig. 52) and combustion fan (4, fig. 52) assembly can now be removed by lifting the front of the burner mounting plate up, and pulling forward.
The ceramic burner (2, fig. 53) can now be visually inspected.
(It is not necessary to clean the burner).

6.2.4 Inspect main heat exchanger

With the burner / fan assembly removed it is now possible to inspect the main heat exchanger. Remove any loose deposits from the heat exchanger, using a brush and jet of water. (Ensure water is kept away from all eletrical components.) Remove the lower part of the condensate trap (1, fig. 54) by unscrewing. Empty and clean (ensuring that any debris that has fallen while cleaning the main heat exchanger is removed) and fill with water to about 10 mm from the top. Refit in boiler.
Reassemble burner and combustion fan in reverse order.

6.2.5 Check central heating expansion vessel

NOTE: It is not necessary to perform this check every year - a check every three years is sufficient.
Close the boiler CH service valves (2, fig. 48). Release the pressure from the boiler as described in Section 7.1.2.
Remove valve cap from expansion vessel charge point (2, fig. 55).
Check that the internal charge pressure of the expansion vessel is between 0.7 and 0.9 Bar. If the pressure is lower than this the vessel should be repressurised using an air pump. Refit valve cap.

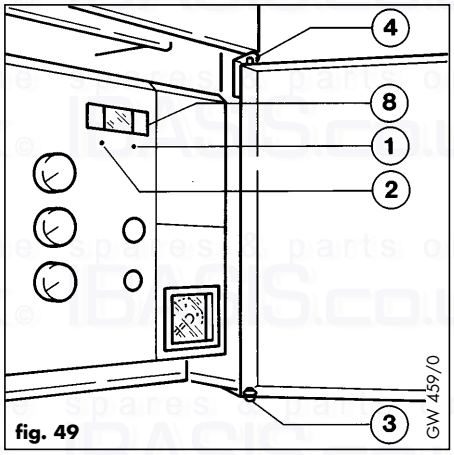

fig. 49

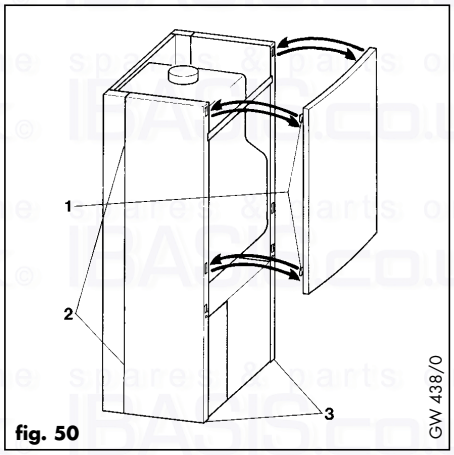

fig. 50

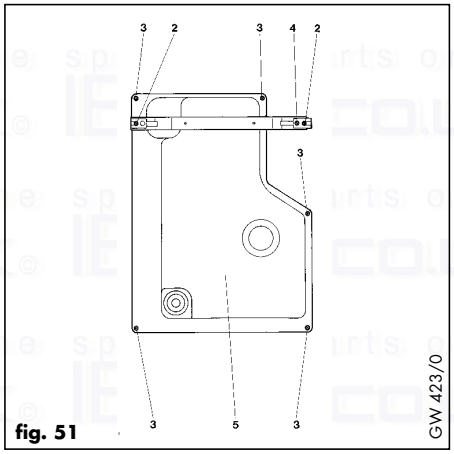

fig. 51

Open CH service valves, and repressurise boiler and heating system if necessary (see Section 5.4).

6.3 Recommisioning the boiler

- Refit the combustion chamber front cover. Ensure that the panel is correctly fitted and a good seal is obtained.
- Turn on gas and electrical supply.
- Operate burner and check flame picture. (see Section 6.1)
- Check boiler functioning either visually or by using the built-in diagnostic feature (see Section 5.11)
- Check burner pressure (see Section 5.10) and boiler gas flow rate.
- Check soundness of internal gas connections.
- Carry out electrical safety checks (see Section 5.1)
- Check water soundness
- Refit case (see Section 5.14)

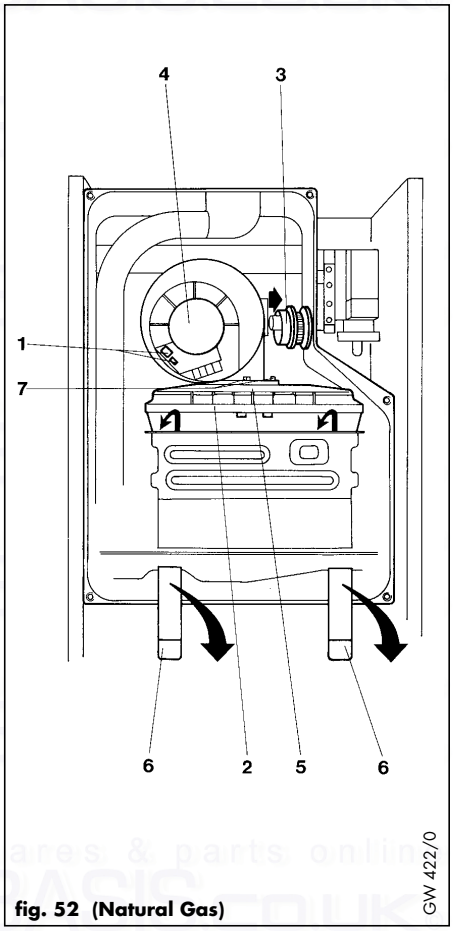

fig. 52 (Natural Gas)

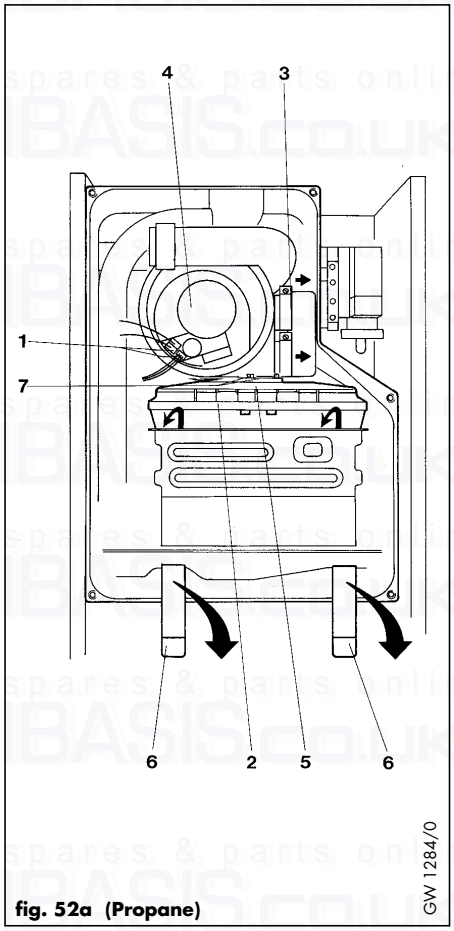

fig. 52a (Propane)

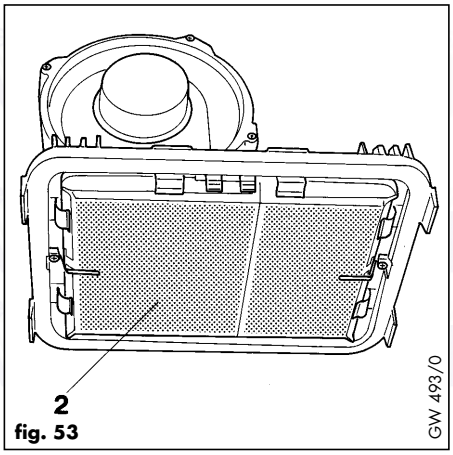

fig. 53

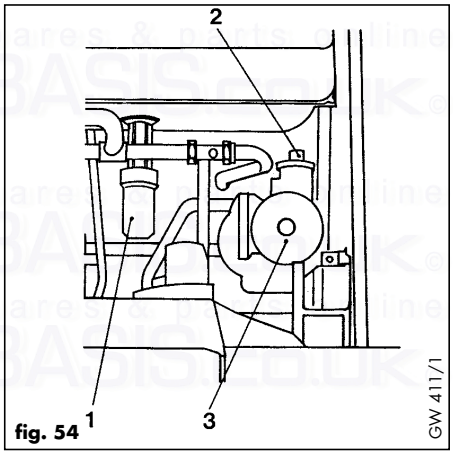

fig. 54

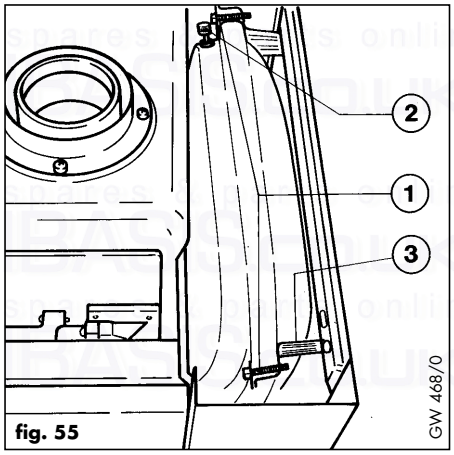

fig. 55

7. Parts replacement

IMPORTANT:
Before starting any maintenance work:

- Isolate the mains electricity supply by disconnecting the plug at the socket outlet (if there is an isolating switch only, remove the fuse from the switch).
- Turn OFF the gas supply at the gas service valve fitted to the boiler.
- When removing any water carrying components ensure that the control box cover and terminal box cover are in position and water is kept away from all electrical components.
- Always test for gas soundness and always carry out functional checks after any service work and after exchanging any gas carrying component.
- Always check earth continuity, polarity and resistance to earth with a multimeter after any service work and after exchanging any electrical component.

7.1 Initial preparation

(These initial preparation procedures need only be carried out where specifically mentioned in the individual component replacement procedures).

spares & parts online IBASIS.CO.UK

7.1.1 Turning off the boiler (fig. 56)

- Isolate the electrical supply to the boiler
- Turn off the gas service valve (1)
- Turn off boiler CH service valves (2)
- Turn off DHW cold water service valve (3).

7.1.2 Releasing CH water pressure and draining boiler (fig. 56)

- Isolate electrical supply to boiler.
- Turn off boiler CH service valves (2).
- Attach a length of rubber tube to draining points (4), and drain the water from the boiler into a suitable container by undoing the drain points one turn.

7.1.3 Removal of front casing

7.1.3.1 Door (fig. 57)

- Remove bottom hinge screw (3) and pull the bottom door panel forwards and down to release it from top hinge pin (4).

7.1.3.2 Top panel (fig. 58)

- Slide top panel upwards to release retaining clips (1).

7.1.3.3 Reassembly

- Reassemble in reverse order.

7.1.4 Removal of side casings

- Remove front casing as in Section 7.1.3.
- Remove screws (3, fig. 58) and slacken screws (2, fig. 59).
- Slide side case panel upwards to release retaining clips and lift off (2, fig. 58).
- Reassemble in reverse order

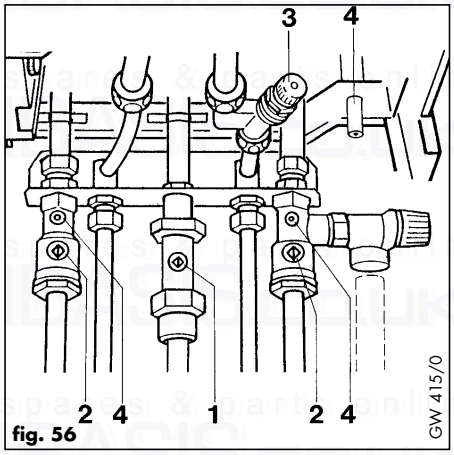

fig. 56

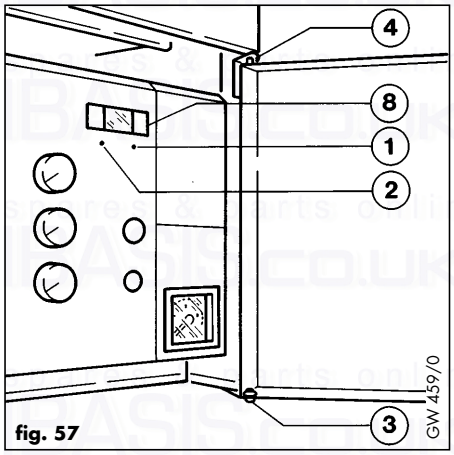

fig. 57

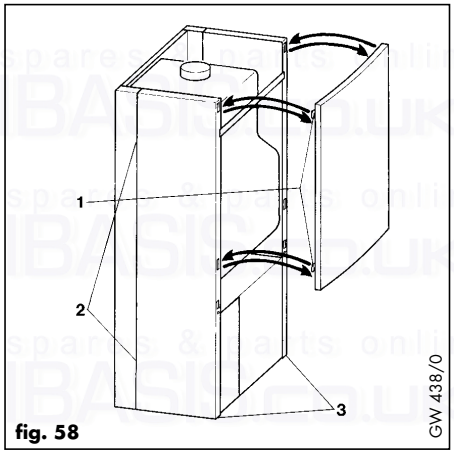

fig. 58

7.1.5 Removal of combustion chamber cover (fig. 59).

- Remove front casing as in Section 7.1.3,
- Slacken the 2 case retaining screws (2).
- Undo the 5 captive inner casing screws (3).
- Remove screw (4).
- Lift combustion chamber cover (5) off boiler.
- Check condition of case seal, and if necessary replace before refitting.
- Reassemble in reverse order, ensuring that the cover case is correctly fitted and a good seal obtained.

7.1.6 Lower front control panel (fig. 60)

- Remove front casing as in Section 7.1.3,
- Undo screw (1) and lower control box forward from top.

7.2 Replacement of fan

- Isolate the boiler from the electrical supply.
- Remove front casing as in Section 7.1.3, and remove combustion chamber cover as in Section 7.1.5.
- Disconnect the 2 plug-in fan connections (1, fig. 7.3).
- Remove the 2 fan securing bolts (7, fig. 61).
- Remove fan inlet restrictor (3, fig. 61) and fit to new fan.
- Remove fan.
- Replace fan mounting gasket (1, fig. 62) with new gasket supplied with fan.
- Reassemble in reverse order, making sure that the 2 fan securing bolts are fully tightened.
- Re-fit combustion chamber and front casing.
- Carry out electrical checks (see Section 5.1).

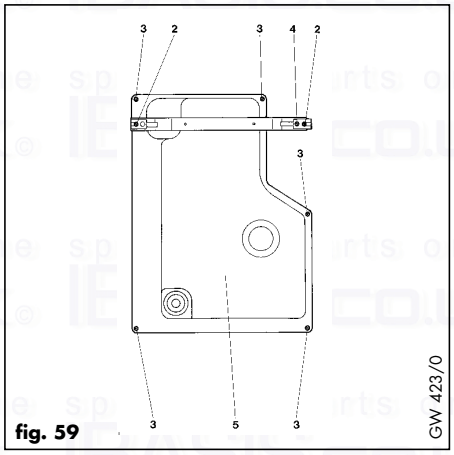

fig. 59

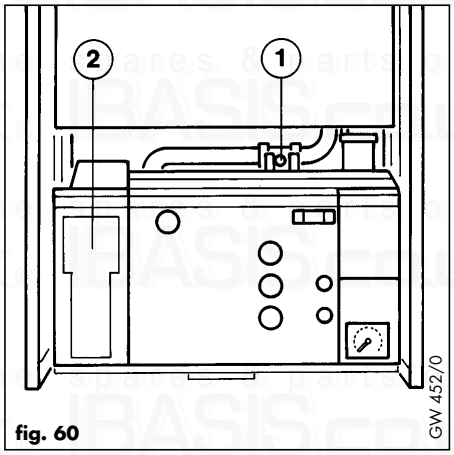

fig. 60

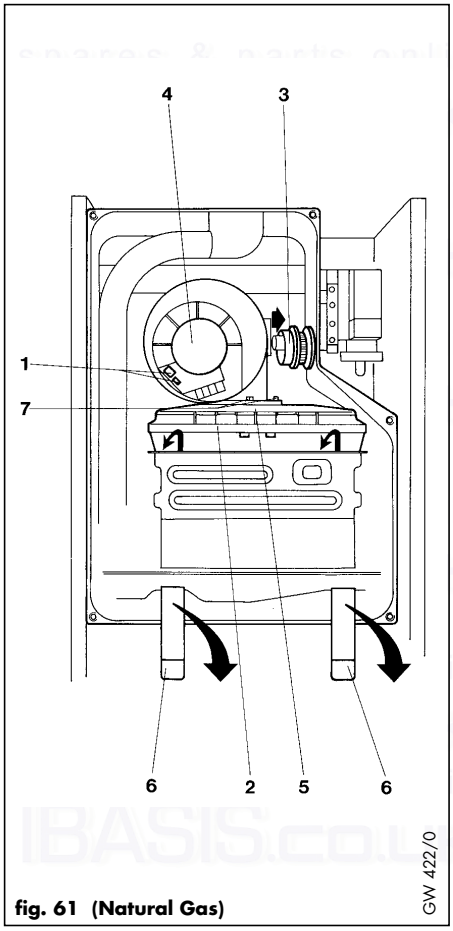

fig. 61 (Natural Gas)

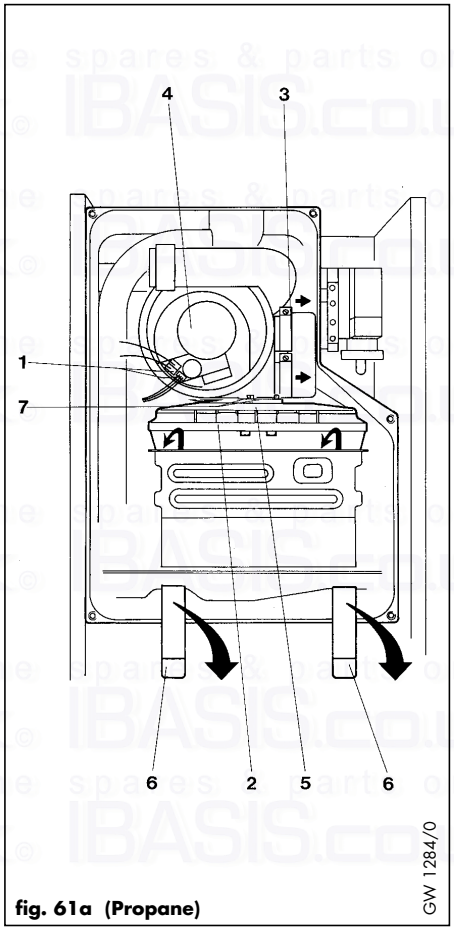

fig. 61a (Propane)

7.3 Replacement of air pressure sensor (fig. 63)

- Isolate the boiler from the electrical supply.
- Remove front casing as in Section 7.1.3.
- Disconnect plug (3) from air pressure sensor.
- Pull the front of the air pressure sensor (1) down to release from gas valve (2) and remove by unhooking from rear retaining clip.
- Replace in reverse order.
- Carry out electrical checks (see Section 5.1).

7.4 Replacement of burner

- Isolate the boiler from the electrical supply.
- Remove front casing as in Section 7.1.3.
- Remove combustion chamber cover as in Section 7.1.5.
- Remove the 2 burner retaining springs (6, fig. 64) by lifting the top of the spring up and pulling forward.
- Disconnect the 2 fan electrical connections (1, fig. 64).
- Slide the fan inlet restrictor (3, fig. 64) top the right to separate from the fan.
- Remove complete burner and fan assembly by lifting the burner plate (2, fig. 64) at the front and pulling forward to disengage burner from a spring clip at the rear.
- Remove burner plate from fan assembly by removing the 2 bolts (5, fig. 64).
- Inspect fan gasket (1, fig. 62) and replace if worn or broken.
- Reassemble in reverse order.
- Carry out electrical checks (see Section 5.1) and check burner pressure (see Section 5.10) and gas rate.

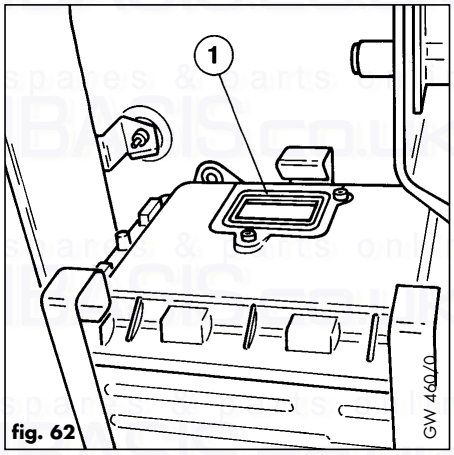

fig. 62

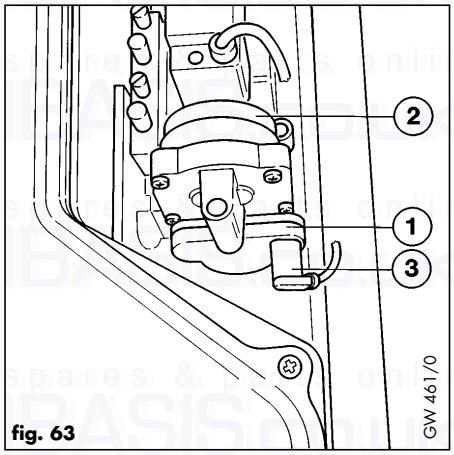

fig. 63

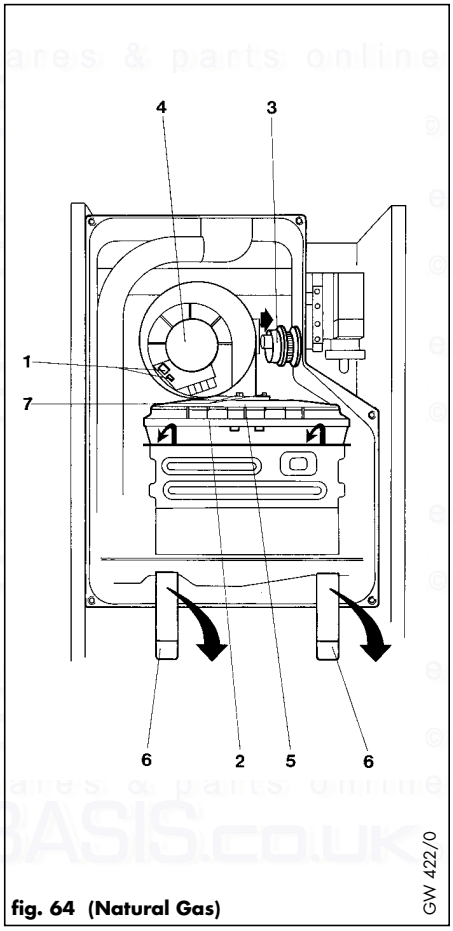

fig. 64 (Natural Gas)

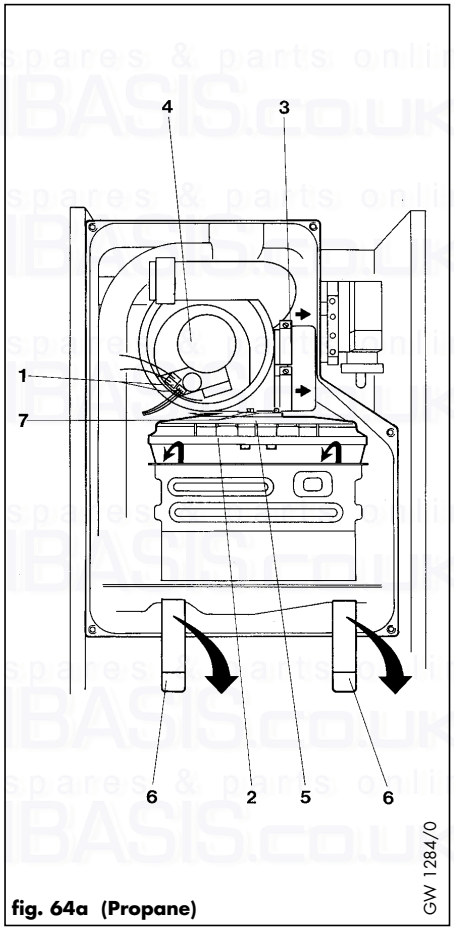

fig. 64a (Propane)

7.5 Replacement of electrodes

- Isolate the boiler for the electrical supply.
- Remove front casing as in Section 7.1.3, and remove combustion chamber cover as in Section 7.1.5

7.5.1 Ignition electrodes (fig. 65).

- Pull off HT lead (1)
- Pull off earth wire (2).
- Remove the 2 retaining nuts (3).
- Remove ignition electrodes (4).
- Fit new sealing gasket supplied with electrode.
- Replace electrode.
- Reassemble in reverse order.
- Carry out electrical checks (see Section 5.1).

7.5.2 Flame sensing electrode (fig. 66).

- Pull off sensing wire (1).
- Remove two retaining nuts (2).
- Remove electrode (3).
- Fit new sealing gasket supplied with electrode.
- Replace electrode.
- Reassemble in reverse order.
- Carry out electrical checks (see Section 5.1).

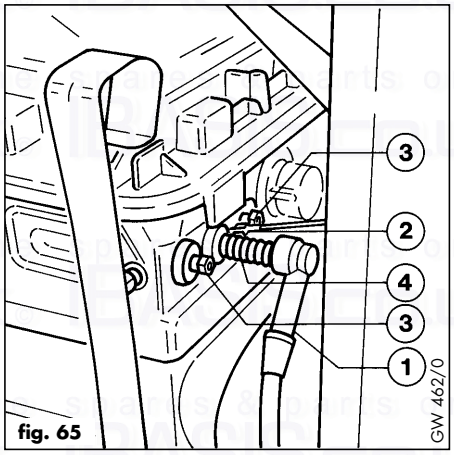

fig. 65

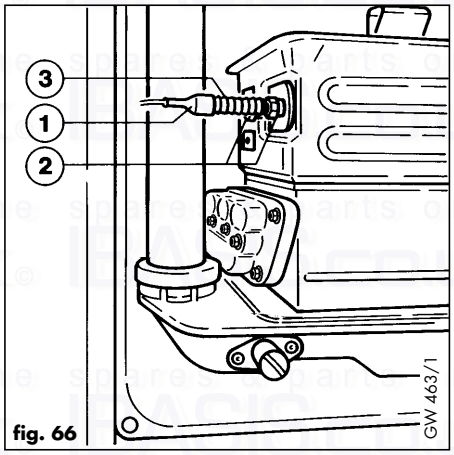

fig. 66

7.6 Replacement of condensate sump

- Isolate the boiler from the electrical supply.
- Remove front casing as in Section 7.1.3 and remove combustion chamber cover as in Section 7.1.5
- Pull the condensate sump retaining clip (1, fig. 67) forward to release sump.
- Remove two securing clips (6, fig. 68) by pulling the top of the securing clip up and forward.
- Rotate sump draw handle (2, fig. 67) until it is pointing forward, then slide it down into the condensate trap (3, fig. 67) clear of the sump.
- Remove sump by pulling it down at the front and forward.
- Check gaskets (1, fig. 69) before replacing.
- Replace in reverse order.

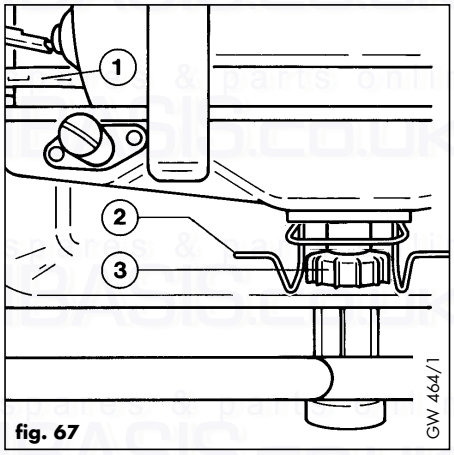

fig. 67

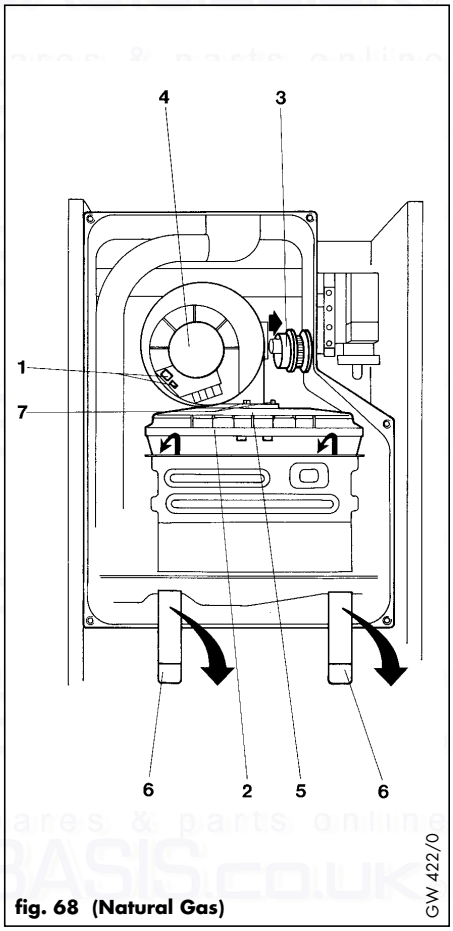

fig. 68 (Natural Gas)

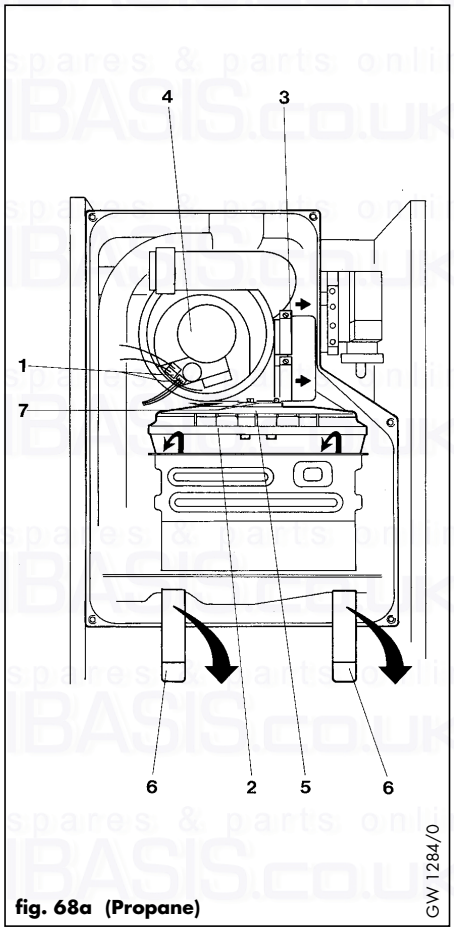

fig. 68a (Propane)

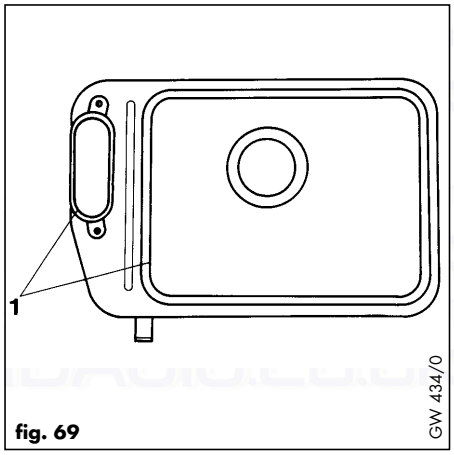

fig. 69

7.7 Replacement of condensate trap (fig. 70)

- Isolate boiler from the electricity supply.
- Remove front casing as in Section 7.1.3, remove combustion chamber cover as in Section 7.1.5 and lower front control panel as in Section 7.1.6
- Undo the 2 unions (1) and pull trap down to remove from boiler.
- Fill condensate trap with water to about 10 mm from the top before replacing.
- Reassemble in reverse order using spare `O' rings supplied.

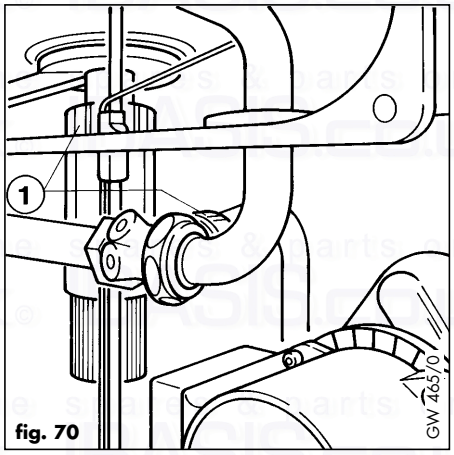

fig. 70

7.8 Replacement of temperature sensors (NTCs) (fig. 71).

- Disconnect boiler from electricity supply.
- Remove front casing as in Section 7.1.3 and remove combustion chamber cover as in Section 7.1.5
- Identify sensor(s) to be replaced.
- Pull off connecting wire to sensor.
- Unscrew NTC sensor.
- Replace using contact paste supplied
- Assemble in reverse order.

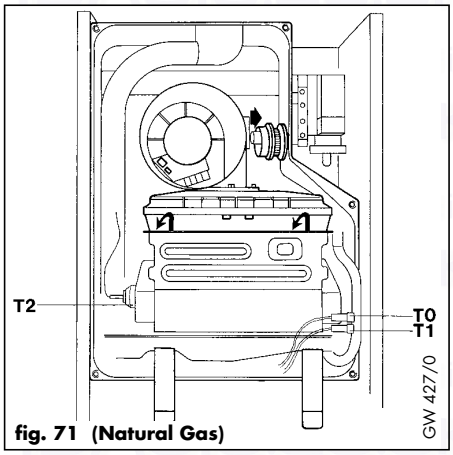

fig. 71 (Natural Gas)

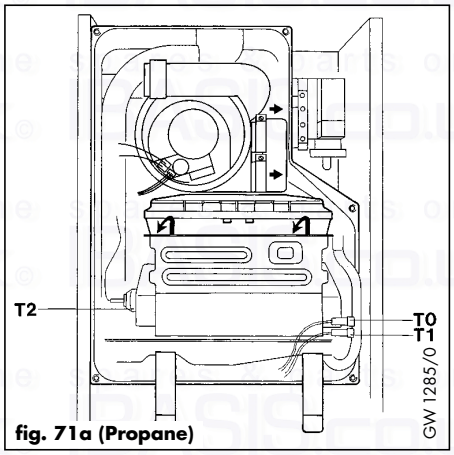

fig. 71a (Propane)

7.9 Replacement of gas valve (fig. 72)

- Isolate the boiler from the electrical supply.
- Turn off the gas service valve.
- Remove front casing as in Section 7.1.1
- Undo screw (3) and pull off solenoid electrical connecting plug.
- Undo the 4 screws (1).
- Pull gas valve forward to remove.
- Reassemble in reverse order using cork gasket supplied.
- Carry out electrical checks (see Section 5.1) and gas soundness tests (see Section 5.2), and check burner pressure (see Section 5.10) and gas rate.

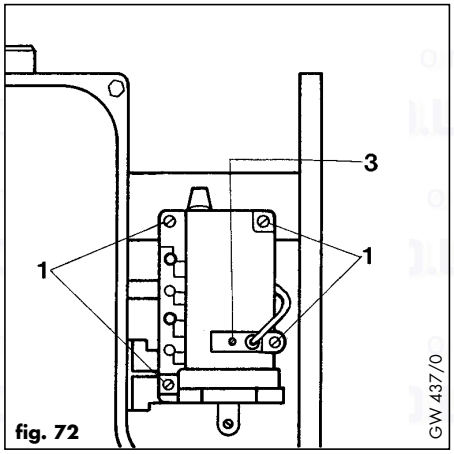

fig. 72

7.10 Replacement of main heat exchanger

- Turn off the boiler as in Section 7.1.1.
- Release CH water pressure and drain boiler as in Section 7.1.2.
- Remove front casing as in Section 7.1.3 and remove combustion chamber cover as in Section 7.1.5
- Remove fan and burner assembly as in Section 7.4.
- Remove condensate sump as in Section 7.6.
- Pull off wires from heat exchanger NTC (1, fig. 73), ignition electrode (2, fig. 73) sensing electrode (3, fig. 73) and earth wire (4, fig. 73).
- Remove screw (5, fig. 73) and wire from heat exchanger connecting pipe.
- Pull off the 2 wire pipe retaining clips (1, fig. 74).
- Undo the 4 nuts (1, fig. 75).
- Pull pipe (2, fig. 74) forward to release from heat exchanger.
- Pull pipe (3, fig. 74) to the right and remove heat exchanger.
- Reassemble in reverse order.
- Recommision boiler (see Section 5).

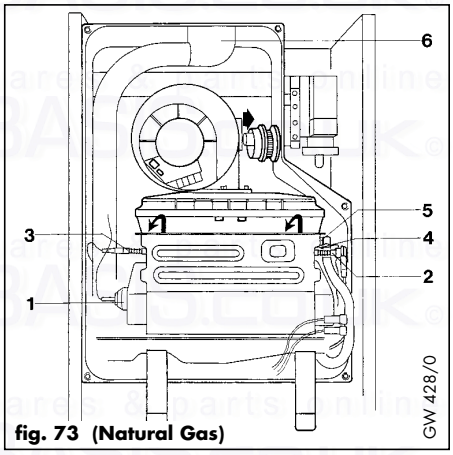

fig. 73 (Natural Gas)

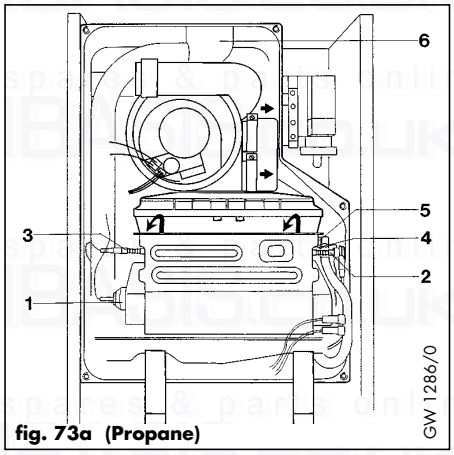

fig. 73a (Propane)

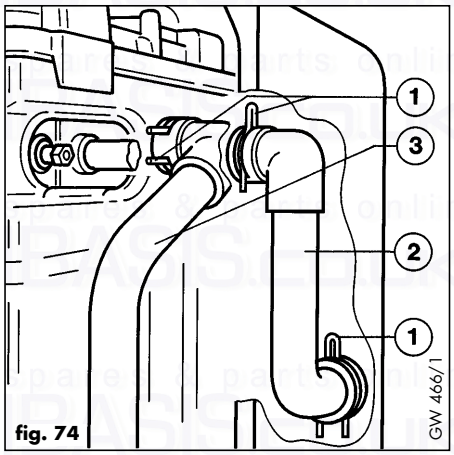

fig. 74

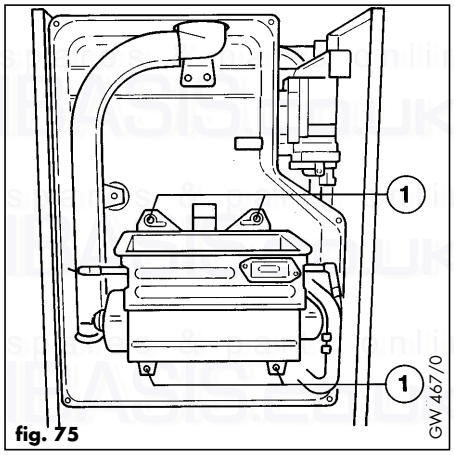

fig. 75

spares & parts online IBASIS.CO.UK

7.11 Replacement of CH expansion vessel

In the unlikely event of a failure of the CH expansion vessel follow procedure 7.11.1 or 7.11.2 depending upon the installation circumstances.

7.11.1. Boiler installed with air/flue duct to left/-right hand side, or vertical flue installation (where 600mm vertical clearance exists above the boiler) - fig. 76

- Turn off the boiler as in Section 7.1.1.
- Release CH water pressure and drain boiler as in Section 7.1.2.
- Slacken 2 screws (1).
- Slide expansion vessel upwards and out of boiler casing.
- Replace in reverse order.
- Refill and repressurise the boiler (see Section 5.4).

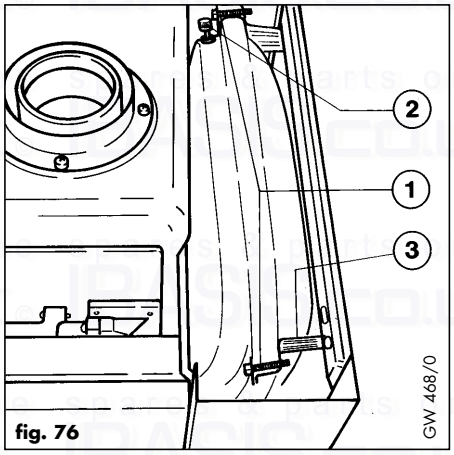

fig. 76

7.11.2 Boiler installed with air flue duct to the rear, or vertical flue installation (where less than 600 mm vertical clearance exists above the boiler)

EITHER
Remove the boiler front the wall as follows:

- Turn off the boiler as in Section 7.1.1.
- Release CH water pressure and drain boiler as in Section 7.1.2.
- Remove front casing as in Section 7.1.3
- Disconnect external wiring from boiler terminal box.
- Disconnect flow and return connections at compression connection above boiler CH service valves (1, fig. 77).
- Disconnect gas connection at compression joint on top of gas service valve (2, fig. 77).
- Disconnect domestic hot and cold water connections on the water section (3, fig. 77).

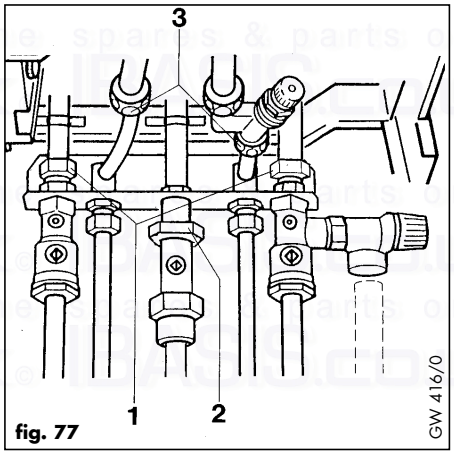

fig. 77

- Disconnect the flue from the top of boiler as described in Section 4.7.
- Remove boiler from wall and slacken two screws (1, fig. 76).
- Slide expansion vessel upwards and out of boiler casing.
- Reassemble in reverse order.
- Re-mount the boiler (see Section 4.6).
- Re-commission the boiler (see Section 5).

OR

A suitable replacement expansion vessel can be fitted externally to the boiler as described in Section 3.7.5 (if possible on the central heating return in an accessible position). In these circumstances, the replacement expansion vessel must be correctly sized ignoring the original expansion vessel which can be left in position on the boiler.

7.12 Replacement of main safety isolating transformer

- Isolate boiler from the electricity supply.
- Remove front casing as in Section 7.1.3
- Lower front control panel as in Section 7.1.6.
- Remove condensate trap as in Section 7.7.
- Remove back of control box by undoing the 2 screws (1, fig. 78).
- Unplug transformer plugs (1, fig. 79) and remove from control box.

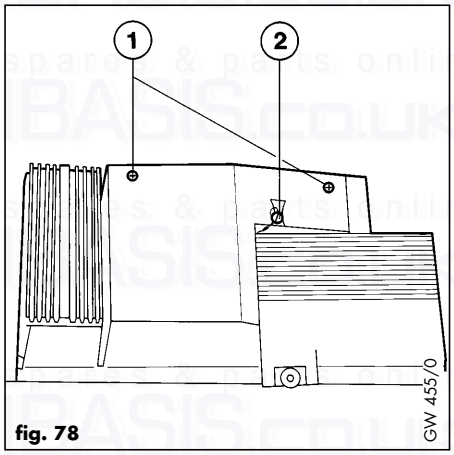

fig. 78

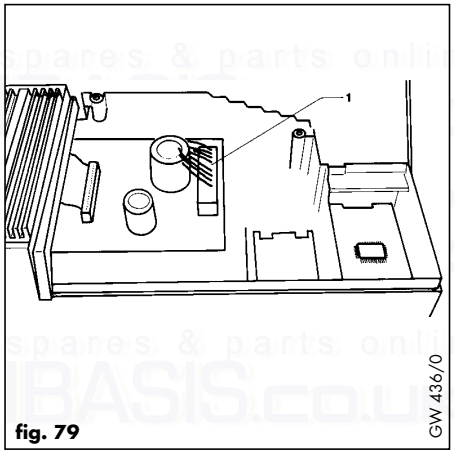

fig. 79

- Undo screws (7, fig. 80) and remove transformer by pulling it down and to the right.
- Reassemble in reverse order.
- Carry out electrical checks (see Section 5.1).

7.13 Replacement of ignition transformer (fig. 81)

- Isolate the boiler from the electricity supply.
- Remove front casing as in Section 7.1.3.
- Lower front panel as in Section 7.1.6.
- Remove screw (1) and slide spark generator forward to release from boiler chassis.
- Disconnect leads by undoing two cable grips (2) and pull out.
- Pull off mains connection cover (3) and disconnect electrical connections.
- Reassemble in reverse order.
- Carry out electrical checks (see Section 5.1).

7.14 Replacement of pump

- Turn boiler off as in Section 7.1.1.
- Release pressure and drain boiler as in Section 7.1.2.
- Remove front casing as in Section 7.1.3.
- Lower front control panel as in Section 7.1.6.

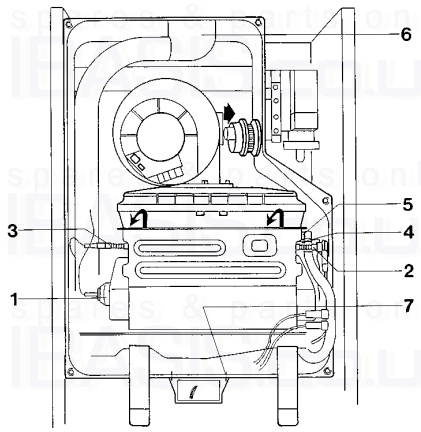

fig. 80 (Natural Gas)

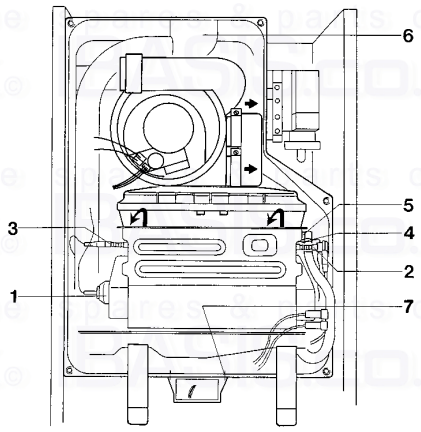

fig. 80a (Propane)

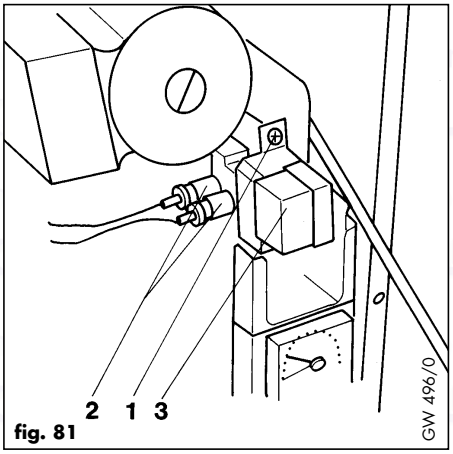

fig. 81

- Undo the 3 pump screws (3, fig. 82).
- Pull pump forward to remove.
- Remove back of control box by undoing 2 screws (1, fig. 78).
- Disconnect pump supply plug and lift clear of board.
- Fit new `0' rings (supplied with pump) to connecting tubes.
- Reassemble in reverse order.
- Recommision boiler (see Section 5).

7.15 Replacement of automatic air release (fig. 82)

- Turn off boiler as in Section 7.1.1.
- Release CH water pressure and drain boiler as in Section 7.1.2.
- Remove front casing as in Section 7.1.3.
- Lower front control panel as in Section 7.1.6.
- Unscrew cap (4) of auto air release and remove inner components.
- Replace with new inner components and reassemble in reverse order.
- Refill and repressurise the boiler (see Section 5.4).

7.16 Replacement of automatic bypass

- Turn off boiler as in Section 7.1.1.
- Release CH water pressure and drain boiler as in Section 7.1.2.
- Remove front casing as in Section 7.1.3.
- Lower front control panel as in Section 7.1.6.
- Remove spring clip (2, fig. 83) by lifting upwards.

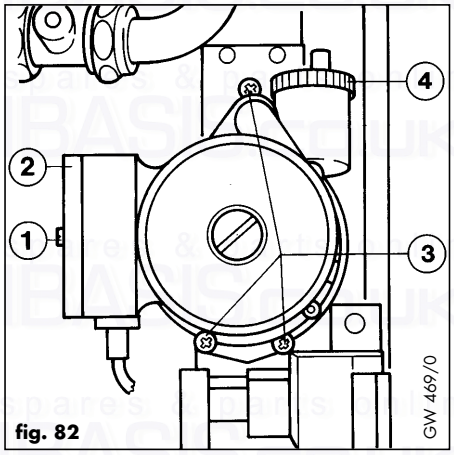

fig. 82

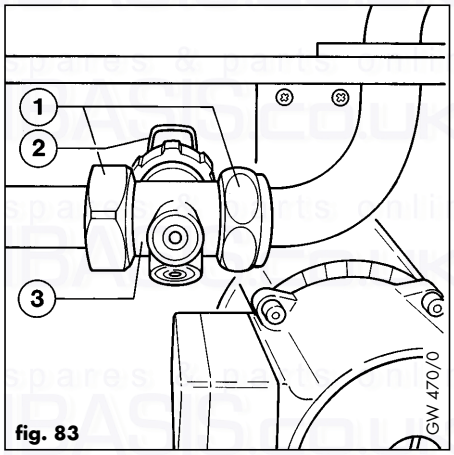

fig. 83

- Undo union (1, fig. 84) and remove bypass (2, fig. 84).
- Reassemble in reverse order using sealing washers supplied.
- Refill and repressurise the boiler (see Section 5.4).

7.17 Replacement of diverter valve

- Turn off boiler as in Section 7.1.1.
- Release CH water pressure and drain boiler as in Section 7.1.2.
- Remove front casing as in Section 7.1.3.
- Lower front control panel as in Section 7.1.6.
- Remove screw (1, fig. 85) and lift ignition transformer clear of diverter valve.
- Remove tube (1, fig. 86) by pulling to left.
- Remove four screws (2, fig. 86)
- Pull diverter valve to remove.
- Remove diverter valve operating solenoid cover (3, fig. 86) and disconnect solenoid wires.
- Reassemble in reverse order.
- Carry out electrical checks (see Section 5.1).
- Refill and repressurise the boiler (see Section 5.4).

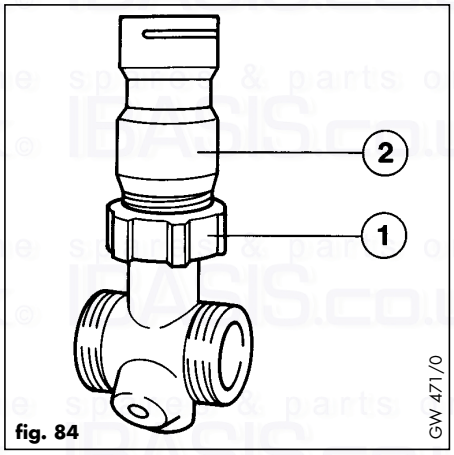

fig. 84

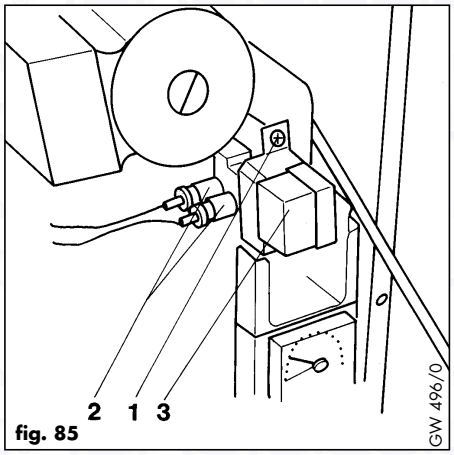

fig. 85

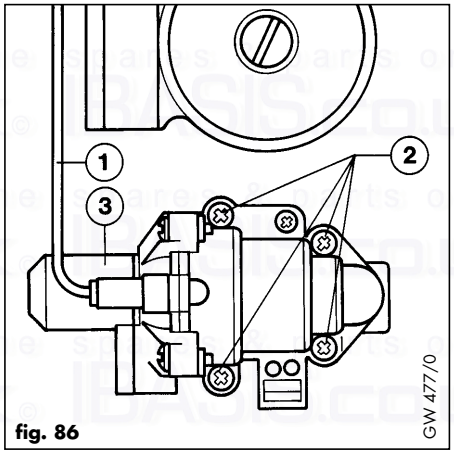

fig. 86

7.17.1 Replacement of diverter valve diaphragm (fig. 87).

- Remove diverter valve as in Section 7.17
- Remove the 4 screws (1).
- Lift top off diverter valve and remove diaphragm.
- Replace in reverse order.
- Carry out electrical checks (see Section 5.1).
- Refill and repressurise the boiler (see Section 5.4).

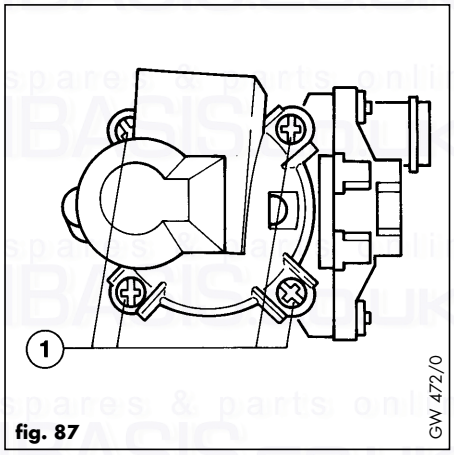

fig. 87

7.18 Replacement of pressure gauge (fig. 88)

- Turn off boiler as in Section 7.1.1.
- Release CH water pressure and drain boiler as in Section 7.1.2.
- Remove front casing as in Section 7.1.3.
- Lower front control panel as in Section 7.1.6.
- Undo union (1) at rear of pressure gauge, depress side springs on pressure gauge with a screwdriver and pull forward to remove.
- Replace in reverse order.
- Refill and repressurise the boiler (see Section 5.4).

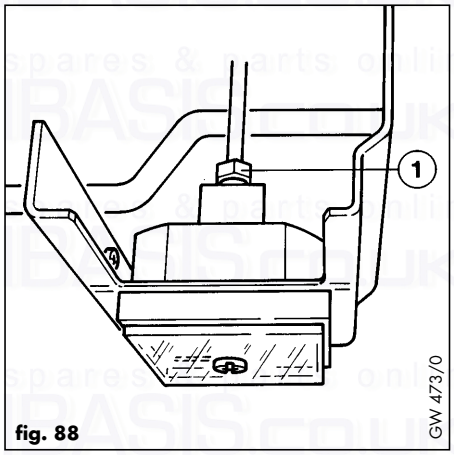

fig. 88

7.19 Replacement of water section

- Isolate boiler from the mains supply.
- Turn off mains water isolating valve and open a hot tap.
- Remove front casing as in Section 7.1.3.
- Lower front control panel as in Section 7.1.6.
- Undo union (1, fig. 89) remove spring clip (1, fig. 90) by lifting, pull pipe (2, fig. 90) forward and remove.

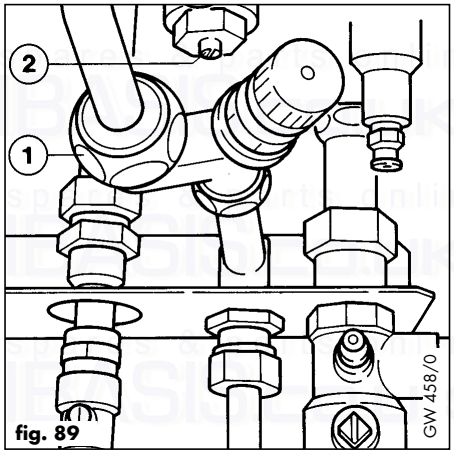

fig. 89

- Remove retention clip (3, fig. 90).
- Remove screw (5, fig. 90).
- Pull water section forward to release from pipe (4, fig. 90) and lift water section out of boiler.
- Pull off clear water section lid and disconnect the wires to DHW microswitch.
- Reassemble in reverse order.
- Carry out electrical checks (see Section 5.1).
- Refill and repressurise the boiler (see Section 5.4).

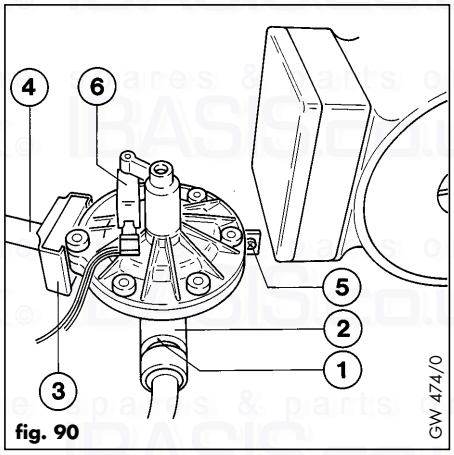

fig. 90

7.19.1 Change of water section diaphragm (fig. 91)

- Remove water section as in Section 7.19.
- Remove the 6 screws (1), and lift water section cover.
- Remove diaphragm.
- Reassemble in reverse order.
- Carry out electrical checks (see Section 5.1).
- Refill and repressurise the boiler (see Section 5.4).

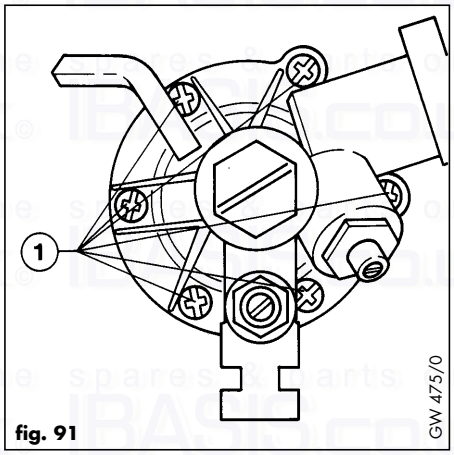

fig. 91

7.20 Replacement of DHW microswitch (fig. 90).

- Isolate appliance from electricity supply.
- Remove front casing as in Section 7.1.3.
- Lower front control panel as in Section 7.1.6.
- Pull off clear cover from water section.
- Disconnect wires from DHW microswitch (6).
- Gently push DHW micro to the left with a screwdriver to release it from two securing pins.
- Reassemble in reverse order.
- Carry out electrical checks (see Section 5.1).

7.21 Replacement of DHW heat exchanger (fig. 92)

- Turn off boiler as in Section 7.1.1.
- Release CH water pressure and drain boiler as in Section 7.1.2.
- Remove front casing as in Section 7.1.3.
- Lower front control panel as in Section 7.1.6.
- Unscrew the 2 nuts (1).
- Remove the spring clips (2) and release the push-fit connections.
- Remove DHW heat exchanger.
- Reassemble in reverse order using new sealing rings supplied.
- Refill and repressurise the boiler (see Section 5.4).

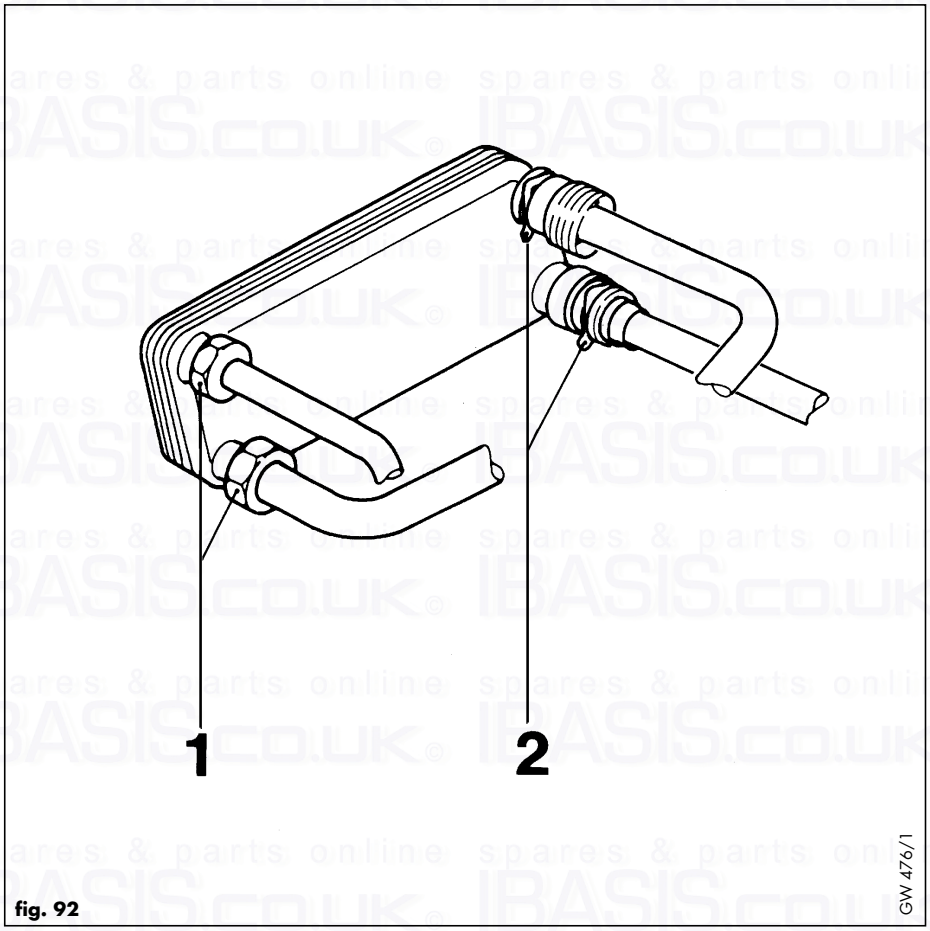

fig. 92

7.22 Replacement of printed circuit boards (PCBs)

Before commencing work on PCB replacements carry out the following:-

- Diagnose which board requires changing using the fault diagnosis system (see Section 8: Fault finding).
- Turn off the boiler as in Section 7.1.1.
- Remove front casing as in Section 7.1.3.
- Lower from control panel as in Section 7.1.6.
- Remove back of control box by undoing the two screws (1, fig. 93).

spares & parts online IBASIS.CO.UK

7.22.1 Replacement of boiler display board (fig. 94)

- Slide the connecting plug (1) forwards to release from connecting pins.
- Move retaining clips (2) outwards and slide board upwards to remove.
- Reassemble in reverse order.
- Carry out electrical checks (see Section 5.1)

7.22.2 Replacement of rectifier board

- Remove screw (3, fig. 94) and lift cover panel (4, fig. 94) off control box.
- Unplug two leads (1, fig. 95) from the mother board.
- Remove two screws (2, fig. 95) and remove rectifier board.
- Reassemble in reverse order.
- Carry out electrical checks (see Section 5.1)

7.22.3 Replacement of mother board (fig. 96)

- Remove rectifier board as in Section 7.22.2.
- Disconnect all plug connectors (1) from board.
- Disconnect white wire (2) from earth terminal strip
- Disconnect pump supply plug (3) and lift clear of board.
- Push two spring retainers (4) to the right and lift right hand side of circuit board off retainers.
- Lift and pull circuit board to the right to release from retainer lugs (5).
- Reassemble in reverse order.
- Carry out electrical checks (see Section 5.1)

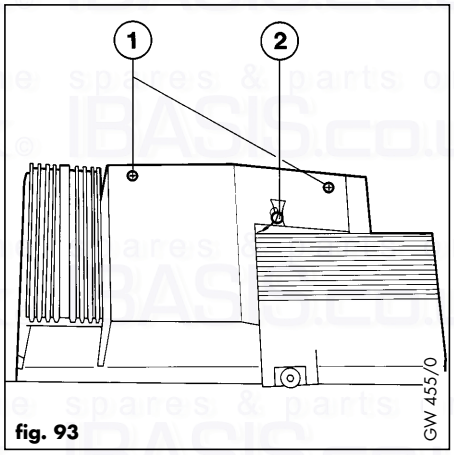

fig. 93

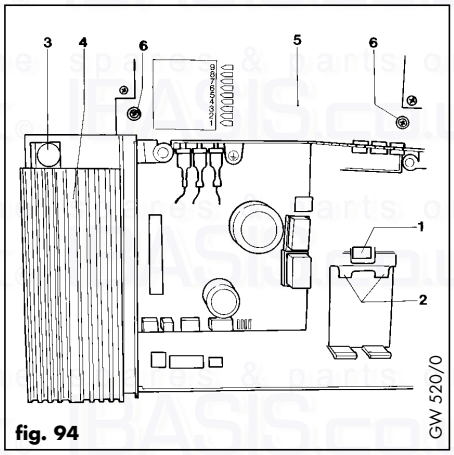

fig. 94

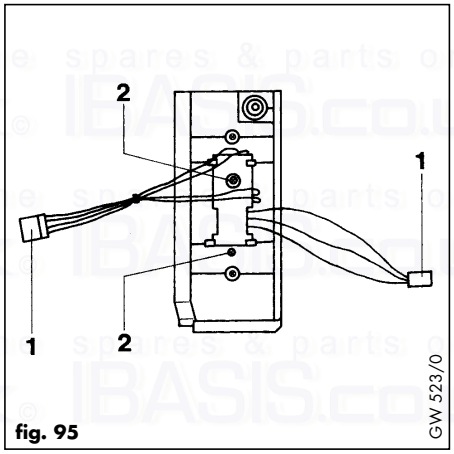

fig. 95

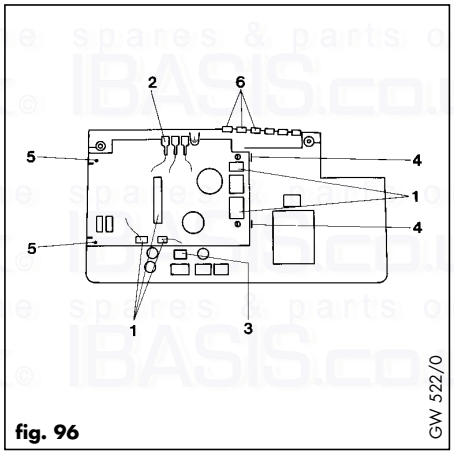

fig. 96

7.22.4 Replacement of CPU board

- Remove rectifier and mother boards as in 7.22.2 and 7.22.3.
- Pull off central heating control knob (2, fig. 97) from front of control box.
- Remove lower control box cover (5, fig. 94) by undoing two screws (6, fig. 94).
- Lift all cable grommets (6, fig. 96) out of grommet channels.
- Lift lower control box cover (5, fig. 94) clear.
- Disconnect three cable plugs (1, fig. 98) and flame sensor lead (2, fig. 98).
- Unplug ribbon cable (3, fig. 98) from relay board.
- Remove two screws (4, fig. 98).
- Squeeze together the board retaining clips (5, fig. 98) and lift board out of control box.
- Reassemble in reverse order.

NOTE: When refitting the CPU board, ensure that the user control spindles (a, fig. 99) are aligned with the potentiometer hole (b, fig. 99) and that the locating rib of the potentiometer correctly engages in the groove of the control knob spindle.

- Recommission boiler (see Section 5)

7.22.5 Replacement of relay board

- Remove on/off control knob.
- Remove rectifier and mother boards as in Sections 7.22.1 and 7.22.2.
- Remove lower control box cover (5, fig. 94) by undoing two screws (6, fig. 94).
- Lift all cable grommets (6, fig. 96) out of grommet channels.
- Lift lower control box cover (5, fig. 94) clear.

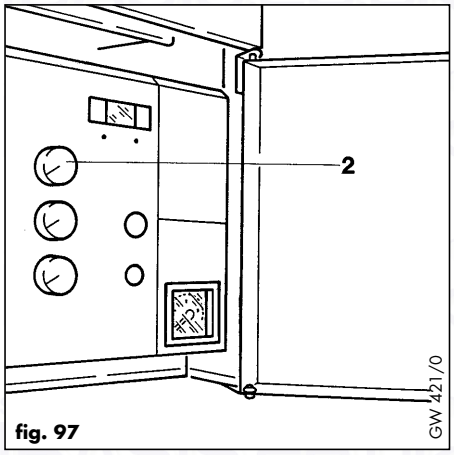

fig. 97

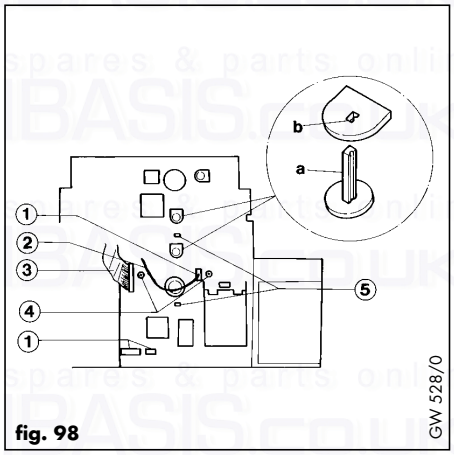

fig. 98

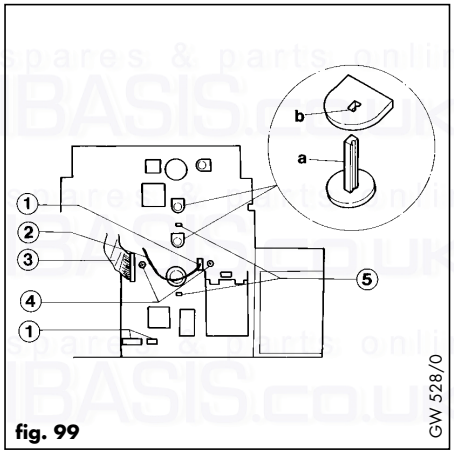

fig. 99

- Disconnect three cable plugs (1, fig. 100).
- Disconnect two earth wires (2, fig. 100) from earth terminal strip.
- Remove screw (3, fig. 100).
- Remove wiring terminal box cover by undoing two screws (1, fig. 101).
- Disconnect wires from relay panel at wiring connector strip.
- Remove screw (4, fig. 102) and remove suppressor (5, fig. 102).
- Lift cable grommets (4, fig. 100) out of grommet channel.
- Squeeze together retaining clip points (5, fig. 100) and lift panel up at the front and forward to remove.
- Replace in reverse order.

NOTE: When refitting relay board ensure that the on/off control knob spindle is correctly aligned with the hole in on/off switch of the panel, and that rib of on/off switch (a, fig. 103) correctly engages into groove of knob spindle.

- Carry out electrical checks (see Section 5.1)

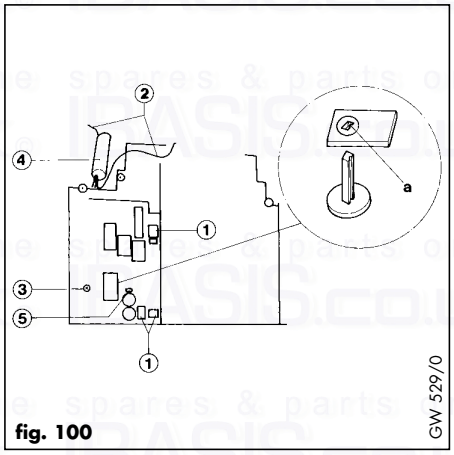

fig. 100

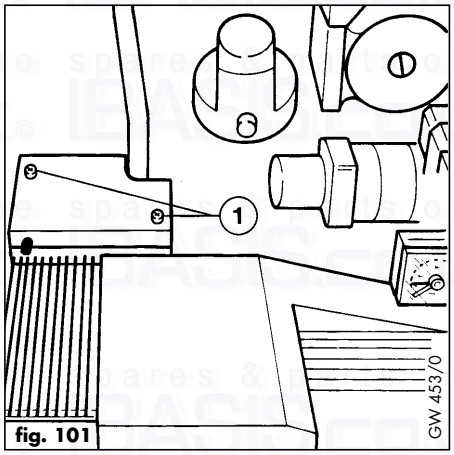

fig. 101

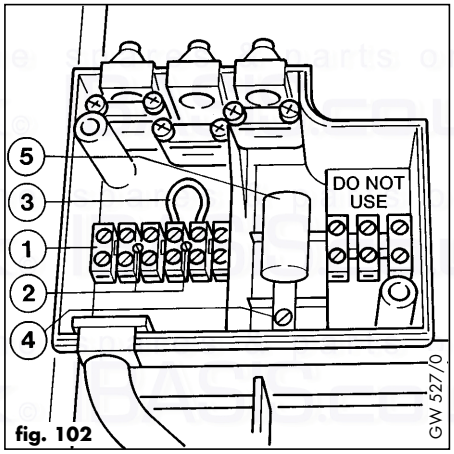

fig. 102

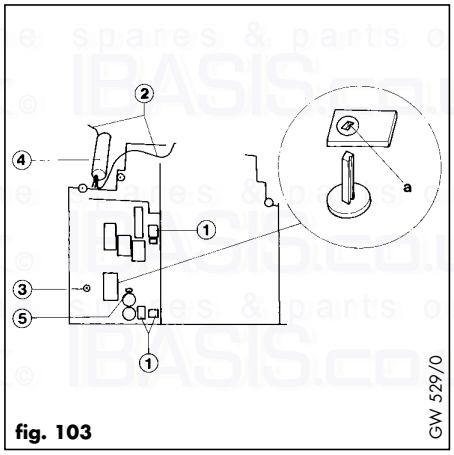

fig. 103

8. Fault finding

8.1 Introduction

ECOmax has an inbuilt advanced multifunction boiler display (1, fig. 104) to assist you with fault finding in the unlikely event of a boiler malfunction. The display features the following 4 modes:-

1. Normal Mode
Under normal conditions the boiler display will show the boiler flow temperature, e.g. 82° - fig. 105. This indicates the boiler is operating correctly after an internal self check.

2. Fault Mode
Should a fault develop in the boiler the display will show a `fault code' indicating what the problem may be. The fault code will appear as a letter `F' followed by a two digit number, e.g. boiler display showing fault code F.21 - fig. 106.

3. Diagnostic Mode
In order to assist with the pinpointing of a particular fault it is possible to use the boiler display in a diagnostic mode to interrogate the boiler about the status of certain components.

To display the diagnostic mode depress both buttons under the display simultaneously (1 and 2, fig. 107).

Once in the diagnostic mode the required diagnostic code is selected by pressing the left hand button under the display (2, fig. 107) until the required code (e.g. d.20 - fig. 108) is found. (If the button is left depressed the display will rapidly scroll through all codes - release the button when the required code is displayed).

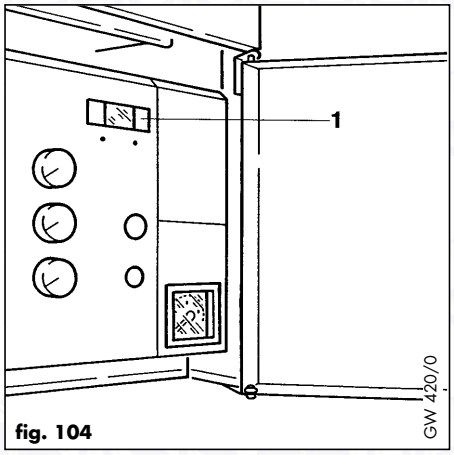

fig. 104

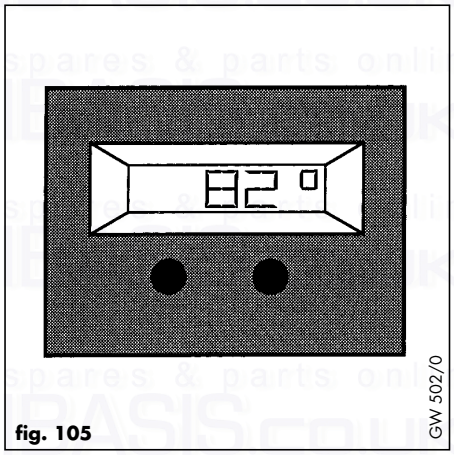

fig. 105

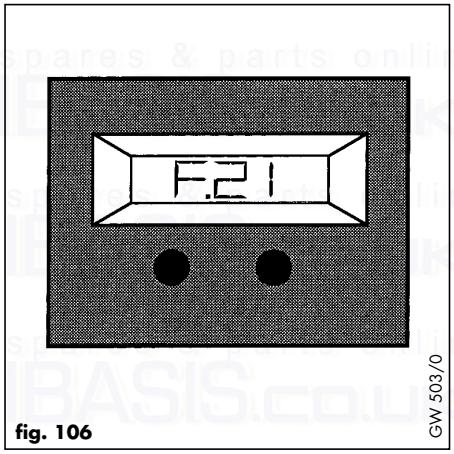

fig. 106

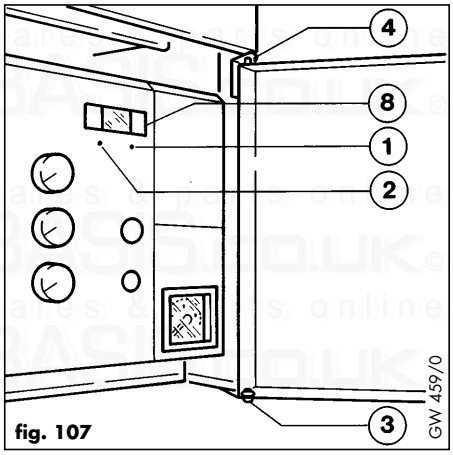

fig. 107

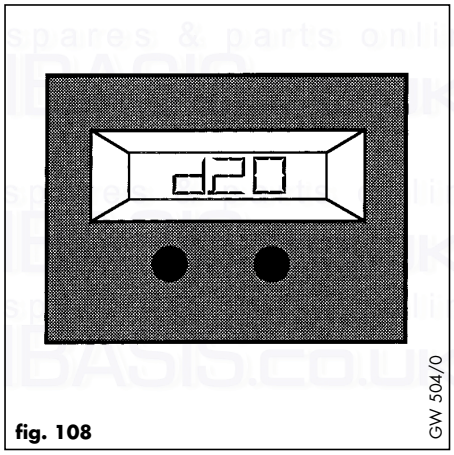

fig. 108

Once the required diagnostic code is displayed the right hand button (1, fig. 107) should be pressed; this will instruct the microprocessor to carry out that particular check.

To return from a diagnostic enquiry, depress the right button (1, fig. 107) once more.

You can now carry out a further diagnostic check (as described above) or exit back to the normal mode by depressing both buttons simultaneously. (See Section 8.3: `Fault diagnosis using the boiler fault mode' for further details).

4. Status Mode

The boiler display may also be used to show the current status of the boiler in its operating cycle.

To display the status mode depress the right button (1, fig. 107) once, e.g. boiler display showing status code S.4 - fig. 109.

The status mode is helpful in diagnosing faults where a fault code is not displayed. (See Section 8.4: `Fault diagnosis using the boiler status mode' for further details)

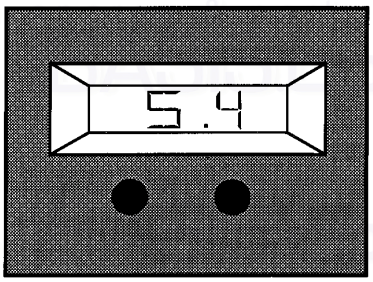

fig. 109

GW 505/0

8.2 Logical fault finding procedure

8.2.1 Preliminary Checks

These checks must be carried out before attempting to use the fault finding guide:-

1) Carry out electrical safety checks (see Section 5.1: Preliminary electrical checks).

2) Check that the external electricity supply to the boiler is on, and a supply of 230V~ is present between boiler terminals 'L' and 'N'.

3) Check that gas supply to the boiler is on and that it has been correctly purged (see Section 5.2: Gas Supply).

4) Ensure the heating system is full of water and charged to approx. 1 Bar. If not refill system and vent (see section 5.4: Filling the heating system). Ensure boiler flow and return service valves are open. Check condensate trap is filled (see Section 5.6).

5) Check that boiler on/off control is set to 'on' position

6) Set boiler central heating control to 'Heating and Hot Water' position.

7) Ensure that the Maximum Radiator Temperature and Maximum Hot Water Temperature controls are set to position '9'.

8) Check that all the external controls are on and calling for heat (if no external controls are fitted, boiler terminals 3 and 4 must be linked). Check that boiler anti-cycling 'economiser' control is not engaged (see Section 4.9.7).

8.2.2 Procedure

Note: Always check the operation of the boiler for central heating first before checking hot water operation. Do not open a hot tap unless instructed to by the fault finding guide.

1) **IF A FAULT CODE IS SHOWING IN THE BOILER DISPLAY GO TO SECTION 8.3: FAULT DIAGNOSIS USING THE BOILER FAULT MODE.**

2) **IF THE BOILER IS NOT FUNCTIONING CORRECTLY AND A FAULT CODE IS NOT SHOWING IN THE BOILER DISPLAY GO TO SECTION 8.4: FAULT DIAGNOSIS USING THE BOILER STATUS MODE.**

3) **NOTE:**
IF THE BOILER DISPLAY IS COMPLETELY BLANK INITIALLY CHECK THE TWO 2A FUSES (F1 AND F2) AND THE 1A FUSE (F5), FIG. 110. (Isolate electrical supply before checking fuses!)
(Spare fuses are located on the inside of the control box cover).

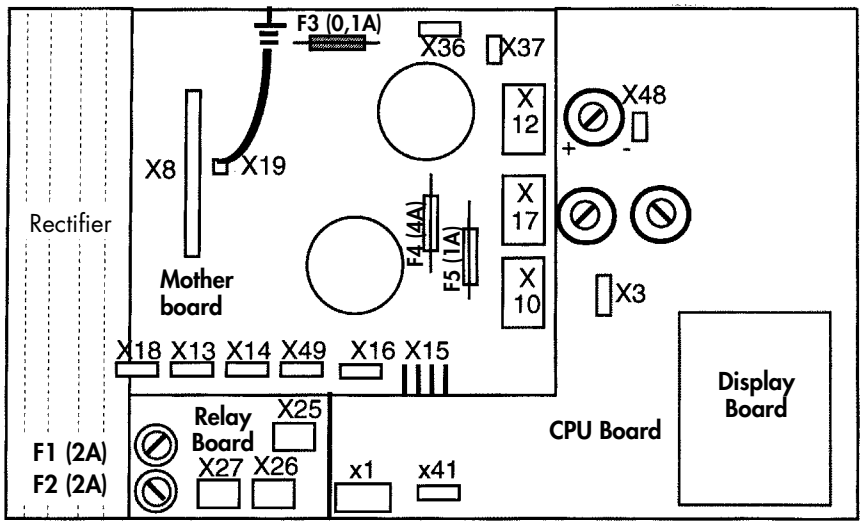

fig. 110

GW 506/0

8.3 Fault diagnosis using the boiler fault mode

Fault Code Displayed	Possible Causes / Description
F0/F20 (alternating display) Interruption to NTC flow sensor 'T0'*	1. Loose wire/poor connections to NTC 'T0' - Repair as necessary. 2. Faulty component - Replace NTC 'T0' (Section 7.8)
F1/F20 (alternating display) Interruption to NTC flow sensor 'T1'*	1. Loose wire/poor connections to NTC 'T1'. - Repair as necessary. 2. Faulty component - Replace NTC 'T1' (Section 7.8)
F2/F23 (alternating display) Interruption to NTC heat exchanger sensor 'T2'*	1. Loose wire/poor connections to NTC 'T2' - Repair as necessary. 2. Faulty component - Replace NTC 'T2' (Section 7.8)
F10/F20 (alternating display) Short circuit to NTC flow sensor 'T0'*	1. NTC 'T0' connection wire short circuit to earth - Repair as necessary. 2. Faulty component - Replace NTC 'T0' (Section 7.8)
F11/F20 (alternating display) Short circuit to NTC flow sensor 'T1'*	1. NTC 'T1' connection wire short circuit to earth - Repair as necessary. 2. Faulty component - Replace NTC 'T1' (Section 7.8)
F12/F23 (alternating display) Short circuit to NTC heat exchanger sensor 'T2'*	1. NTC 'T2' connection wire short circuit to earth - Repair as necessary. 2. Faulty component - Replace NTC 'T2' (Section 7.8)
F20 Shutdown by overheat thermostat	Reset by pressing red 'Reset' button.
F21/F25/F48/F50 (alternating display) Faulty Fuse	4A fuse F4 defective. - Replace fuse with spare provided.
F21 Flame failure fault	Enter diagnostic mode (see Section 8.1), select 'd.66' and press the right button. if **d.66** = **0**, power supply to boiler has been interrupted since fault occured - proceed as for **d.66** = **2** if **d.66** = **1**, fault occurred before ignition, CPU circuit board is defective. Replace (see Section 7.22.4) if **d.66** = **2**, fault occurred during ignition. Possible causes: gas supply disturbed or air in the supply network. Check that the gas supply is turned on and that it has been correctly purged (see Section 5.2). Press the 'Reset' button. Boiler will attempt to re-light. **Is a spark visible at the ignition electrodes?** **if no:-** Turn the central heating control to the 'hot water only' position and push the red 'reset' button. Enter diagnostic mode, select d32 and push the right button. Turn the central heating control back to the 'heating and hot water' position to operate the appliance for heating. The boiler will attempt to relight. Check the ignition transformer operation using diagnostic code d.32 <u>during the ignition cycle</u> (approx 10 seconds). if **d32** = **1**, (during ignition cycle), check ignition electrode, the ignition lead connections to transformer and electrode, if all o.k. replace ignition transformer (see section 7.13). if **d32** = **0**, (during ignition cycle), CPU circuit board is defective, replace (see section 7.22.4).

* Note: For location of NTC sensors refer to Section 2.4: 'Function diagram'.

	if yes:- **(1) No flame visible before boiler shuts off:** gas valve or gas valve connections defective, repair or replace as necessary (see Section 7.9) **(2) Flame is visible before boiler shuts off:** Turn the central heating control to the 'hot water only' position and push the red 'reset' button. Enter diagnostic mode, select d21 and push the right button. Turn the central heating control back to the 'heating and hot water' position to operate the appliance for heating. The boiler will attempt to relight. Check the flame sensing system using diagnostic code d.21 <u>during the ignition cycle</u> (approx 10 seconds). if **d21** = **0**, Check flame monitoring electrode and lead for damage / correct connection. Repair or replace as necessary. if **d21** = **1**, CPU circuit board is defective. Replace (see Section 7.22.4) if **d66** = **3**, fault occurred during operation. Check availability of adequate gas supply (see section 5.8). if o.k. check for flue gas recirculation caused by damage to burner or condensate sump seals, check condensate sump draw handle correctly fitted. Repair or replace as necessary.
F22 or F23 Lack of water in system or poor/no water circulation	1. System water pressure too low - Refill and repressurise the boiler to 1.2 bar (see Section 5.4). 2. Circulating pump not operating - Enter diagnostic mode (see Section 8.1), select '**d.10**' and press the right button. Operate the boiler. if **d10** = **1** check the electrical connections to pump and that the pump is not seized. Repair/replace the pump as necessary (see Section 7.14). if **d10** = **0** replace the CPU circuit board (see Section 7.22.4).
F24 NTC Temperature comparison error	NTC 'T0'* and 'T1'* not giving comparable signals - Check NTC 'T0' and 'T1' connecting leads for continuity and repair as necessary. If fault still exists, replace NTC 'T0' and 'T1'. * For location of NTC sensors refer to Section 2.4 Function diagram
F25 Faulty Fuse	0.1A Fuse F3 defective. Replace with spare provided. (fuse has a resistance of approximately 20Ω).
F30 or F32 or F33 Lack of air flow through appliance	1. Air/flue duct obstructed - check terminal is clear of obstruction, and the flue is correctly assembled with flue seals and air duct clamps. 2. Condensate drain obstructed - check condensate discharge pipe not obstructed. 3. Faulty fan - check fan performance using diagnostic codes '**d.33**' and '**d.34**'. Enter diagnostic mode, select '**d.33**' and press the right button. Operate the boiler. Note the reading obtained. Now select '**d.34**' and press the right button. Compare the reading achieved on '**d.33**' (the required fan speed) with the reading obtained on '**d.34**' (the actual fan speed). If the actual fan speed reading is more than 20 below the required fan speed check the connections to the fan motor. If electrical connections are satisfactory replace the fan (see Section 7.2).

F31 or F34 Air pressure sensor fault	1. Initially check both air/flue duct and condensate discharge are free of obstruction. - Remedy as necessary. 2. Air pressure sensor connections not correctly located in gas valve. - Relocate sensor as necessary, check conection lead. 3. Faulty component - - Replace air pressure sensor (see Section 7.3)

8.4 Fault diagnosis using the boiler status mode

Note: If a fault code (e.g. F.21) is displayed refer to Section 8.3 (Fault diagnosis using the boiler Fault Mode).

8.4.1 Introduction

As the boiler operates, passing through various stages from initial demand for heat (CH or DHW) to eventual shutdown when heat demand is satisfied, the sequence can be followed by using the Status Mode.

In the unlikely event that a fault occurs and is not indicated by a displayed Fault Code, the Status Mode can be used to help identify the problem or problem area.

8.4.2 Entry to 'Status' Mode

Press the right hand button (1, fig. 111) once. The display will then show 'S' followed by a number (e.g. S.0 - fig. 112).

The boiler can now be operated for central heating or hot water and the display will "step" through the various stages indicating the current status of the boiler.

In the event of a fault the boiler will normally stop at the Status Code where the fault has occurred. Use the following tables to identify the fault.

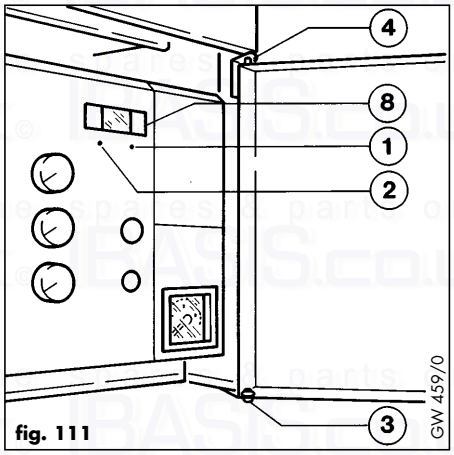

fig. 111

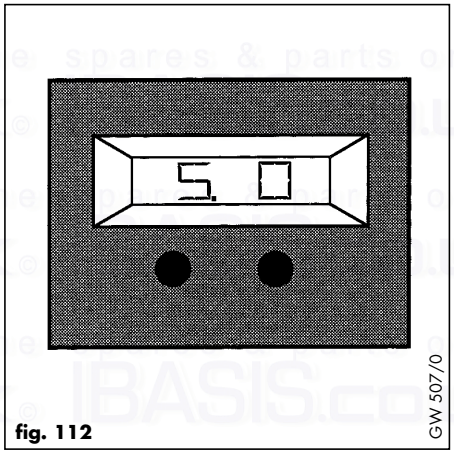

fig. 112

8.4.3 Fault Diagnosis using boiler Status Mode: Central Heating Operation

Symptom: radiators not getting hot.

Status Code Displayed	Possible Causes / Description
S0 or S30	External controls not calling for heat - Check settings of all external heating controls. If no external controls fitted, ensure terminals 3 & 4 of the boiler terminal strip are linked.
S4 or S7 Note: Under normal and correct operation, status code S4 will be displayed until the boiler reaches the set temperature. The faults shown here are only to be suspected if the radiators are not being heated correctly;	Initially check that the boiler is not in the anti-cycling economiser mode - override by turning boiler central heating control to the "Hot Water only" position and back to the "Central Heating and Hot Water" position. Check that maximum radiator temperature is set to between 7-9. 1. Lack of primary water flow to heating system. - check central heating service valves are fully open - check heating system is correctly filled and vented of air 2. Diverter valve not switching to CH position. - check pump is operating correctly - check positive pressure tube from pump to diverter valve is clear - if all above checks satisfactory, replace diverter valve (see Section 7.17).
S10 or S14	1. DHW microswitch on water section defective - check or replace microswitch (see Section 7.20) 2. Water section stuck in DHW position - repair/replace water section (see Section 7.19)

8.4.4 Fault Diagnosis using the boiler Status Mode: Hot Water Operation

Note: Set central heating control to "Hot Water only" position and open a hot water tap.

Status Code Displayed	Possible Causes / Description
S0 Symptom:- Boiler will not operate for hot water production.	1. Water section not operating. - Poor mains inlet water flow/pressure, check availability of adequate mains water supply to appliance (see Section 2.1: Technical data). - check/clean water section inlet filter. - if all above checks are satisfactory, replace water section. 2. DHW microswitch not switching. - check/replace DHW microswitch.
S14 Note: Under normal and correct operation, status code S14 will be displayed until the hot water tap is closed. The faults shown here should only be suspected if the hot water is not being heated correctly (see Section 2.1 for hot water performance specification).	1. Maximum Hot Water Temperature set too low. - adjust Maximum Hot Water Temperature control. 2. Appliance gas supply partially blocked or under-sized. - check gas rate at gas meter, check gas supply pipework. 3. Diverter valve not switching to DHW position. (Flow pipe to radiators getting hot). - enter diagnostic mode, select 'd.35' and press the right button. - **if d35 = 1** check connections to diverter valve solenoid. If ok. replace diverter valve (see Section 7.17). - **if d35 = 0** replace CPU circuit board (see Section 7.22.4).

9. Electrical diagrams

9.1 Functional flow diagram

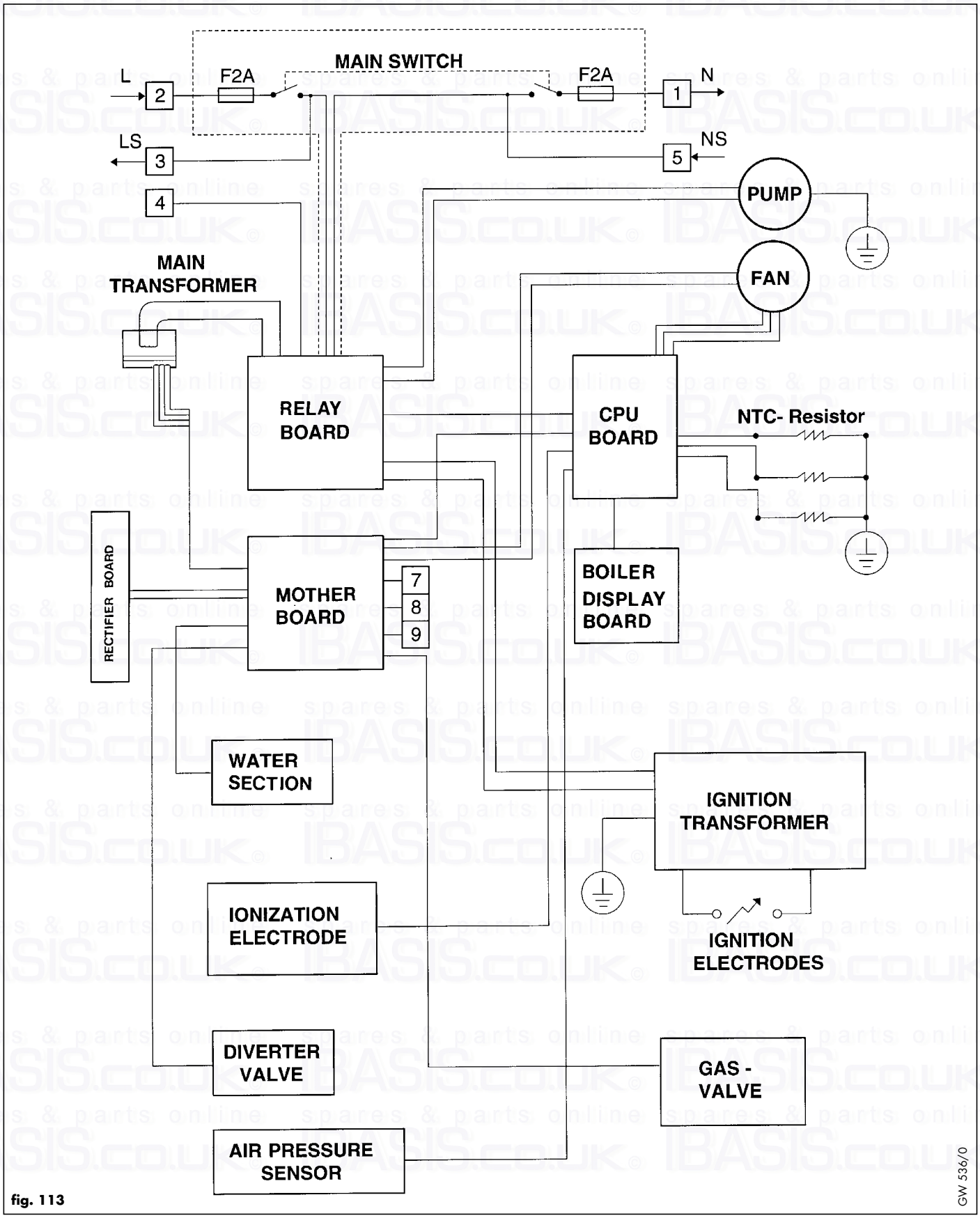

fig. 113

9.2 Wiring diagram

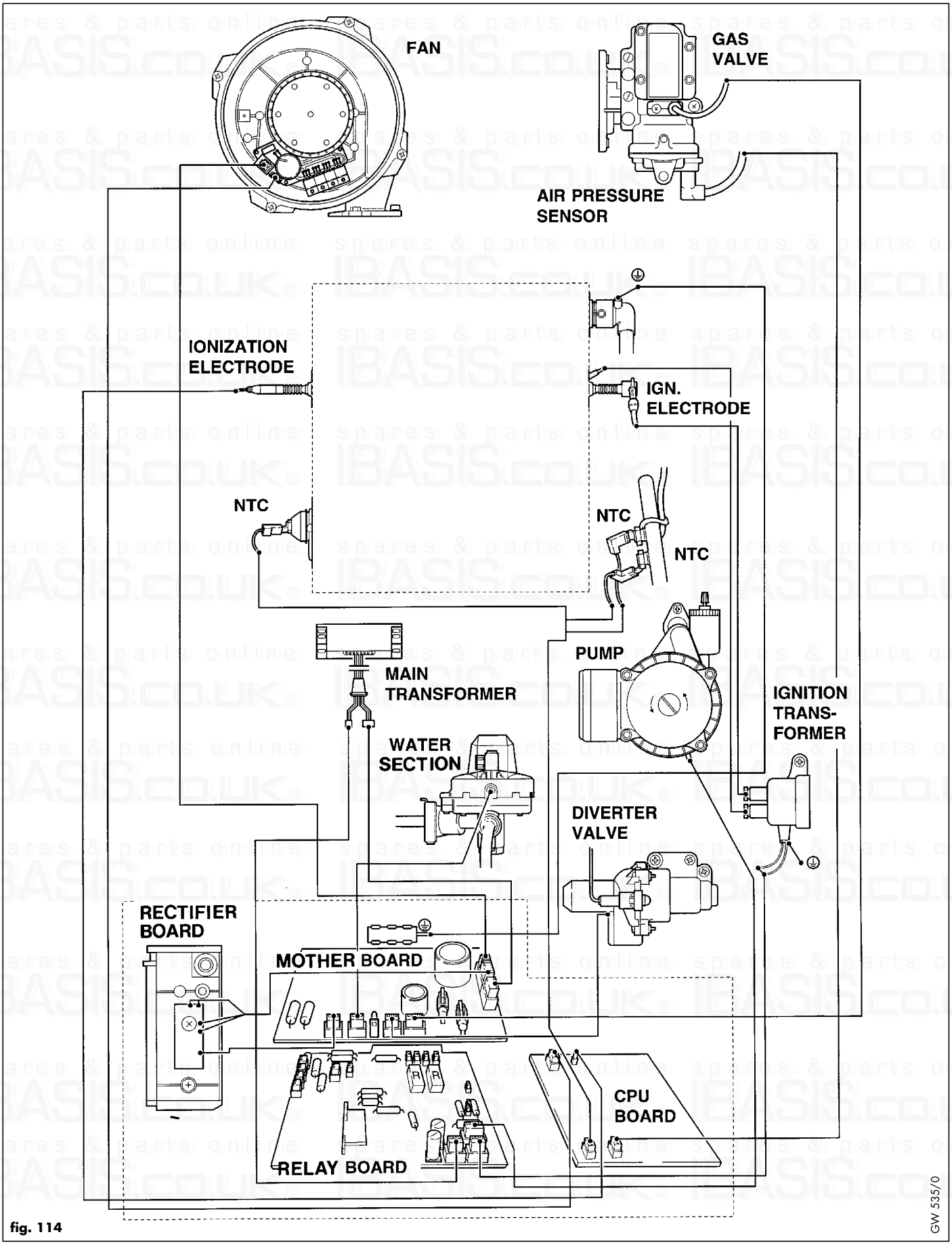

fig. 114

9.3 Schematic appliance circuit diagram

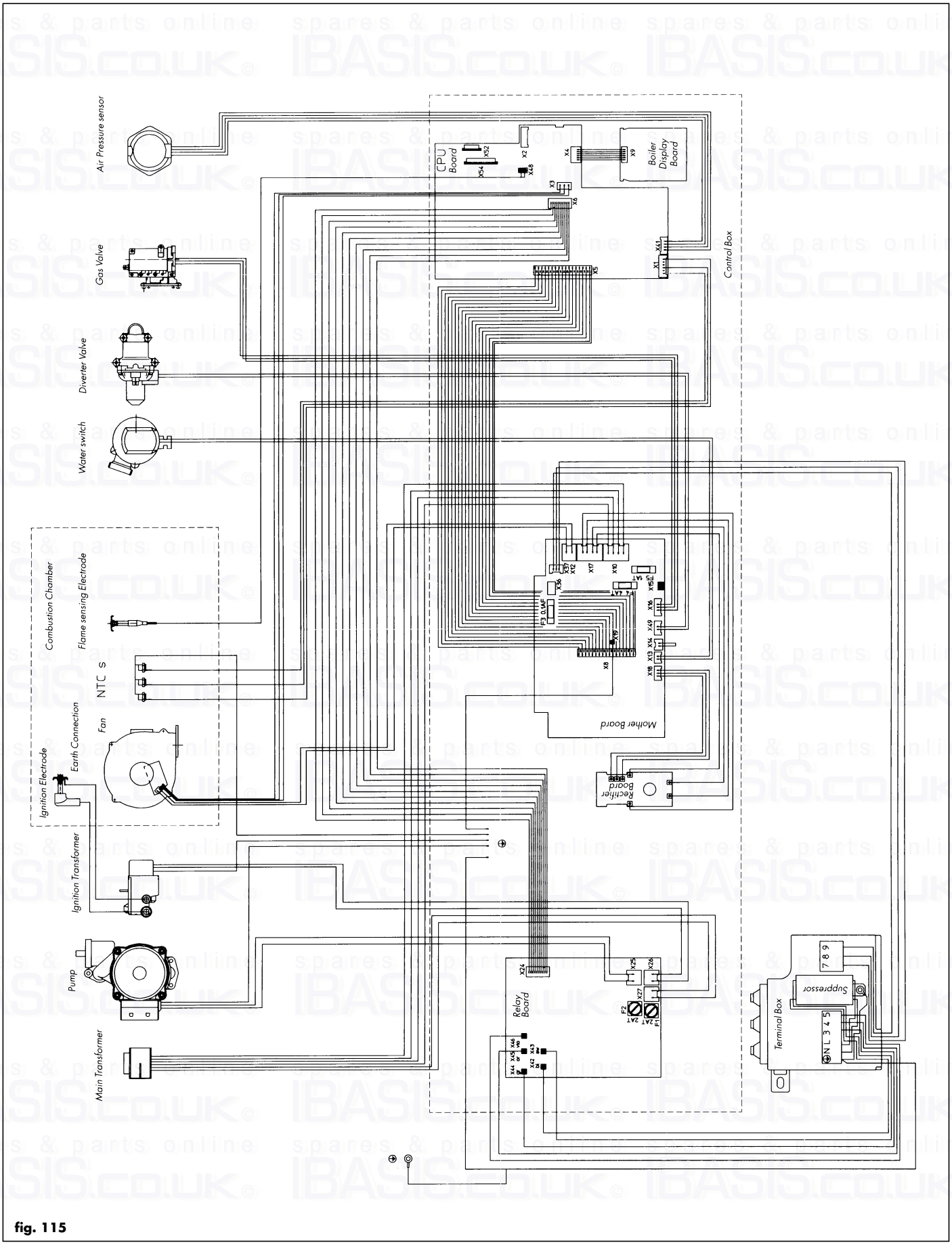

fig. 115

10. Short parts list

Key No.	Description	Part No.	GC No.
01	Top of water Section cpl.	01-3050	283 517
02	Ignition electrode	04-3120	283 569
03	De-aerator	06-1707	263 935
04	Front shell cpl. top	07-8103	283 596
05	Front shell cpl. lower part	07-8104	283 595
06	Side wall, cpl. left hand side	07-9995	283 592
07	Side wall, cpl. right hand side	07-9996	283 591
08	Monitoring electrode	09-0699	283 567
09	Ignition transformer	09-1246	283 661
10	Manometer	10-1250	255 328
11	Pressure sensor	28-5530	283 561
12	Transformer	28-7438	283 660
13	Packing ring	98-0149	259 030
14	Washer	98-1511	262 335
15	Packing ring	98-0287	262 316
16	Packing ring	98-0977	283 574
17	Packing ring	98-2331	283 526
19	Packing ring	98-2409	264 180
20	Packing ring	98-2442	262 413
21	Packing ring	98-2344	283 673
22	Packing ring	98-2495	255 296
23	Screw	11-8946	283 521
24	Microswitch	12-6246	283 518
25	Diaphragm cpl.	01-0354	283 538
26	Flange	08-2494	283 531
27	NTC sensor	25-2805	263 931
28	Screw	13-9227	283 610
29	Clip	08-2922	283 598

spares & parts online IBASIS.CO.UK

spares & parts online IBASIS.CO.UK

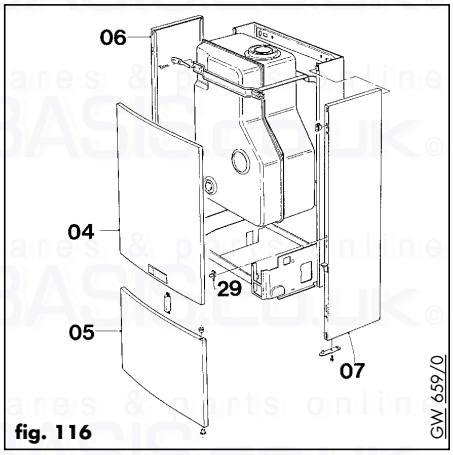

fig. 116

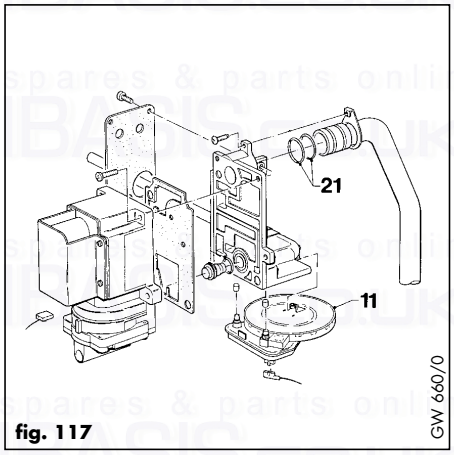

fig. 117

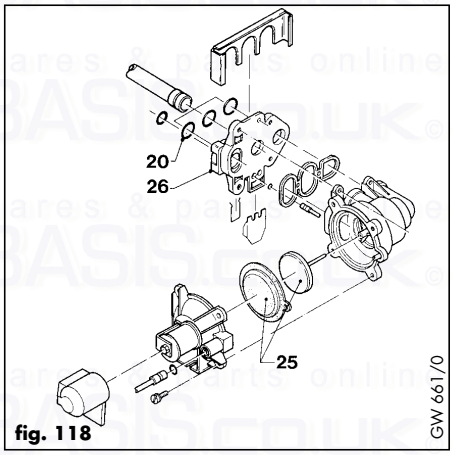

fig. 118

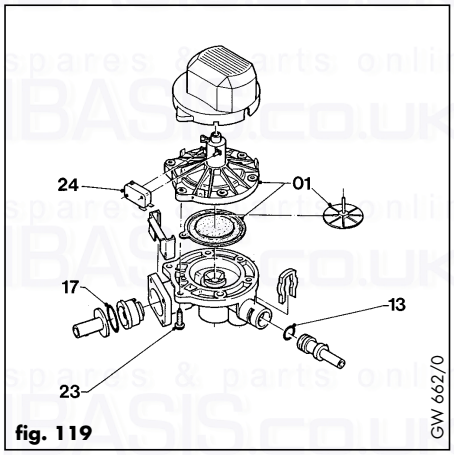

fig. 119

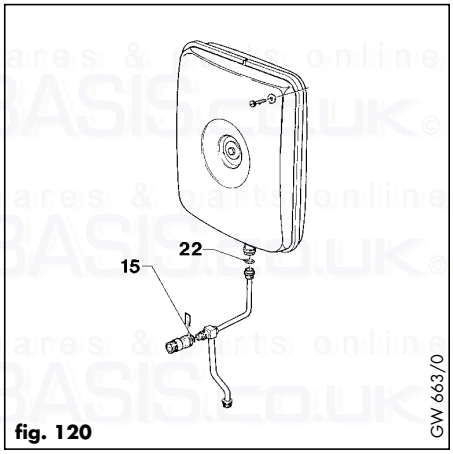

fig. 120

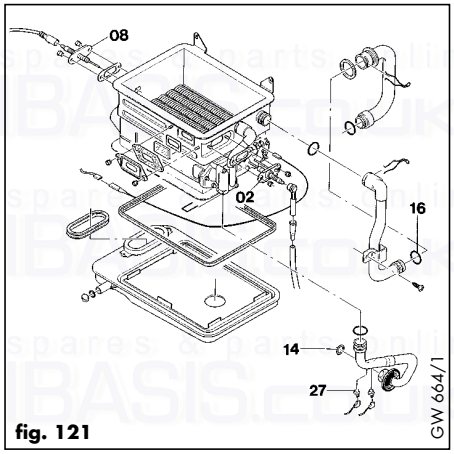

fig. 121

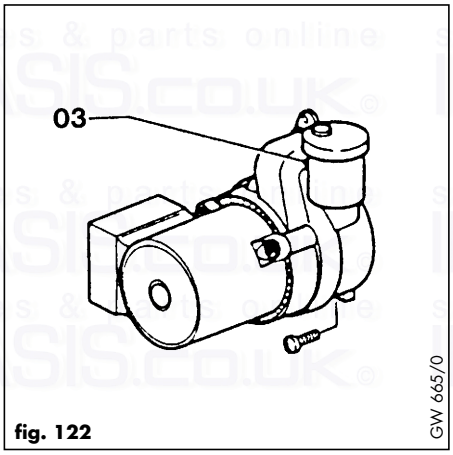

fig. 122

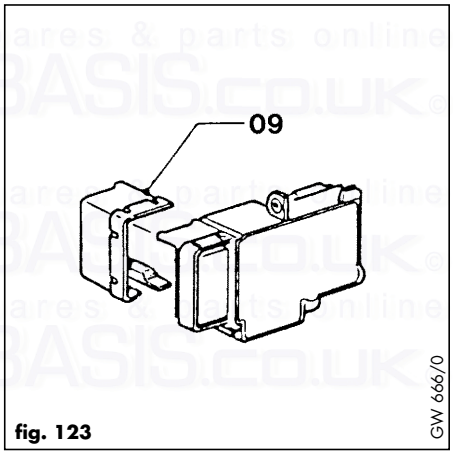

fig. 123

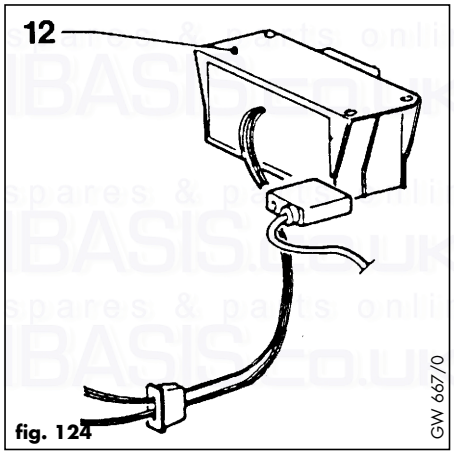

fig. 124

11. Supplementary information for ECOmax: Propane versions

ECOmax VUW 236 EP
ECOmax VUW 286 EP

The appliance delivered is designed for use with propane.

Please read the instructions for installation therefore as follows.

Propane gas burning appliances must not be installed in a room or internal space below ground level, e.g. cellar or basement.

Related documents to be supplemented by:

BS 5482: Domestic butane and propane gas burning installations.

Technical Data

(ECOmax condensing boiler – propane versions)

Table 1: Technical Data – ECOmax propane versions

	VUW		VU		Unit
	236 EP	286 EP	186 EP	226 EP	
Maximum CH heat input	19.1	23.7	19.1	23.7	kW
CH output 80 °C flow / 60 °C return 50 °C flow / 30 °C return	9.9-17.2 10.5-18.0	12.3-21.3 13.1-22.3	9.9-17.2 10.5-18.0	12.3-21.3 13.1-22.3	kW kW
Maximum DHW heat input	24.5	30.4	–	–	kW
DHW heat output	22.7	28.3	–	–	kW
Inlet gas working pressure required	37	37	37	37	mbar
Gas supply (G31) gross C.V.	95.65	95.65	95.65	95.65	MJ/m³
Gas burner pressure (max.)	3.0 ± 0.3	3.0 ± 0.3	1.9 ± 0.19	1.9 ± 0.19	mbar
Gas rate – DHW	0.92 1.75	1.14 2.17	– –	– –	m³/h kg/h
Gas rate – CH	0.71 1.36	0.89 1.70	0.71 1.36	0.89 1.70	m³/h kg/h

Commissioning

Check that the gas supply pressure, gas rate and heat input are in accordance with the Technical Data in Table 1 of these instructions.

IMPORTANT:

- When commissioning a new installation for the first time, ensure that all air has been purged from the storage tank and installation pipework before attempting to light the boiler. If difficulty is experienced in lighting the boiler for the first time during commissioning, particularly with a bulk storage tank installation, it is very likely that there is still air present in the gas supply. Contact your gas supply company to check that the installation has been purged correctly.
- Please ensure that the enclosed sticker is affixed to the storage tank (or bottle store) in a clearly visible position, preferably close to the filling point.
- Please ensure that the storage tank is only filled with propane according to BS 4250; point I. Specification for commercial Butane and Propane.

spares & parts online IBASIS.CO.UK

spares & parts online IBASIS.CO.UK

Vaillant

HEATING, CONTROLS, HOT WATER

Head Office
Vaillant Ltd., Vaillant House,
Medway City Estate, Trident Close,
Rochester, Kent ME2 4EZ

Sales 01634 292310
Service Solutions 0870 6060 777
Technical Advice 01634 292392
Training 01634 292370

83 12 01 GB03

0198 V
Printed in Germany - Imprimé en Allemagne
Printed on 100 % recycled paper

Subject to alteration
We do not accept liability for damage arising as a result of the non-observance of these instructions