INSTRUCTIONS FOR INSTALLATION AND SERVICING

TURBOmax VUW 242/1 E

TURBOmax VUW 282/1 E

Wall hung room sealed fan assisted
combination boilers

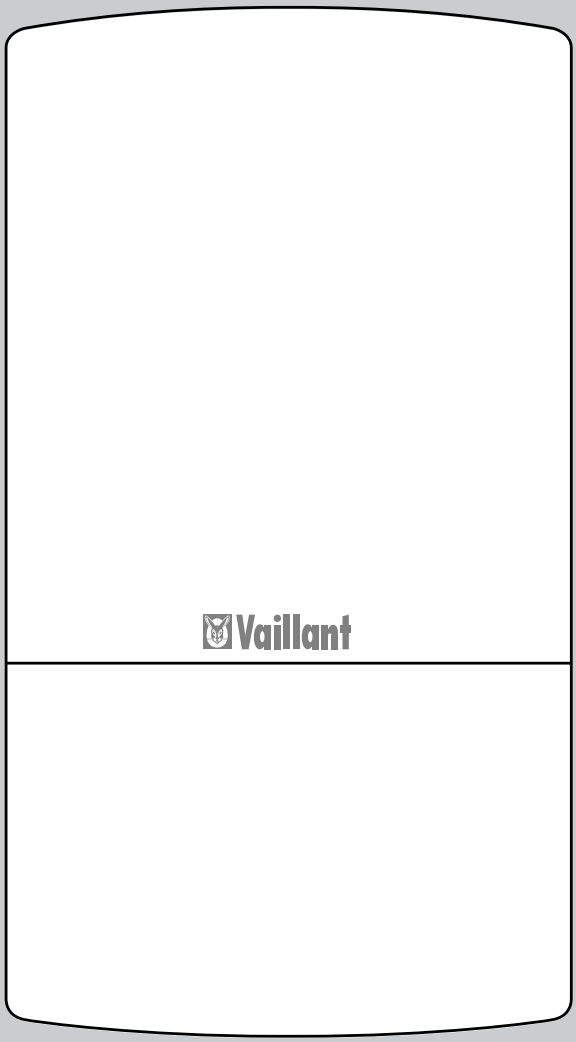

Vaillant

HEATING, CONTROLS, HOT WATER.

spares & parts online IBASIS.CO.UK®

	Page
1. Introduction	**3**
2. Boiler Specification	**4**
2.1 Technical Data	4
2.2 Dimensions	5
2.3 Boiler connections	5
2.4 Function diagram	6
3. General Requirements	**7**
3.1 Related documents	7
3.2 Boiler location	7
3.3 Gas supply	8
3.4 Flue system	8
3.5 Air supply	10
3.6 Electricity supply	10
3.7 Guide to system requirements	10
4. Boiler installation sequence	**13**
4.1 General	13
4.2 Boiler delivery	13
4.3 Preparation of boiler location	14
4.4 Installing the flue system	16
4.5 Mounting the boiler	16
4.6 Connecting the flue assembly to the boiler	17
4.7 Electrical installation	19
4.8 Controls	20
5. Commissioning	**22**
5.1 Preliminary electrical checks	22
5.2 Gas supply	22
5.3 Water supply	22
5.4 Filling the heating system	23
5.5 Initial system flush ('cold')	23
5.6 Initial lighting	24
5.7 Gas inlet working pressure	25
5.8 Main burner pressure	25
5.9 Adjusting central heating output (range rating)	26
5.10 Functional checks	27
5.11 Checking flame supervision device	28
5.12 Final system flush ('hot')	28
5.13 Fitting case	28
5.14 Handing over to user	29

	Page
6. Servicing	**29**
6.1 Initial inspection	29
6.2 Routine maintenance	30
6.3 Re-commissioning the boiler	31
7. Parts replacement	**32**
7.1 Initial preparation	32
7.2 Fan	34
7.3 Air pressure switch	34
7.4 Burner	35
7.5 Electrodes	35
7.6 Temperature sensor (NTC)	36
7.7 Gas valve	36
7.8 Main Heat exchanger	37
7.9 CH expansion vessel	38
7.10 Transformer	39
7.11 Overheat thermostat	39
7.12 Pump	39
7.13 Automatic air release	40
7.14 Automatic bypass	40
7.15 Diverter valve	40
7.16 Pressure and temperature gauge	41
7.17 Differential pressure switch	41
7.18 DHW microswitch	42
7.19 DHW heat exchanger	42
7.20 Circuit boards	43
8. Fault finding	**44**
8.1 Introduction	44
8.2 Logical fault finding procedure	44
8.3 Fault finding charts	45
9. Electrical diagrams	**54**
9.1 Functional flow diagram	54
9.2 Wiring diagram	55
9.3 Schematic appliance circuit diagram	56
10. Short parts list	**57**
11. Supplementary LPG information	**59**

Leave these instructions with the user when the installation is completed.

1. Introduction

Note: This boiler must be installed and serviced by a competent person in accordance with the Gas Safety (Installation and Use) Regulations 1994. In the UK 'CORGI' Registered Installers undertake the work to a safe and satisfactory standard.

The TURBOmax is a fully automatic, wall mounted, room sealed combination boiler for central heating and domestic hot water. Domestic hot water is supplied directly from the boiler, without requiring a copper cylinder, cold water tank, feed and expansion tank or associated pipework. Domestic hot water has priority over central heating.

The boiler has been designed for use with a sealed central heating system, and comes fully tested and assembled with a built-in circulating pump, bypass, expansion vessel and diverter valve.

CE

TURBOmax boilers carry 'CE' Mark. This demonstrates that the boilers fulfill the essential requirements of the Gas Appliance Directive (90/396/EEC) and the Gas Appliance (Safety) Regulations 1992.

The 'CE' Mark also demonstrates that the boilers comply with the requirements of the Electromagnetic Compatibility Directive (Directive 89/336/EEC), the Low Voltage Directive (73/23/EEC), the Boiler Efficiency Directive (92/42/EEC) and the Boiler (Efficiency) Regulations 1993.

TURBOmax meets the requirements of Statutory Instrument 'The Boiler (Efficiency) Regulations 1993 and therefore is deemed to meet the requirements of Directive 92/42/EEC on the efficiency requirements for new hot-water boilers fired with liquid or gaseous fuels.

The TURBOmax range consists of models with outputs for domestic hot water of 24 and 28 kW. The boiler is easily sited on any internal wall and can be installed with either a horizontal or vertical RSF (Room Sealed Fan assisted) flue. Flue extensions and additional bends and elbows are available for increased siting flexibility. (The boiler is not suitable for external installation).

If desired an inhibitor may be used in the system. Guidance on the use of inhibitors is contained in these instructions.

Natural Gas and LPG versions of the boiler are available.

The boiler contains a domestic hot water heat exchanger. The temperature in the heat exchanger is limited by the boiler control system and it is not necessary to install a scale reducer on the cold mains inlet to the boiler. However, in exceptionally hard water areas to prevent scale formation in the property hot water system pipework, a scale reducer may be fitted.

The TURBOmax has built-in diagnostic indicator lights which illuminate in sequence giving information on the boiler status when operating and performance of key components to aid in commissioning and fault finding.

The data badge is fitted on the bottom of the combustion chamber.

See text of General Requirements for Installation Requirements or notes.

2. Boiler specification

2.1 Technical data

TURBOmax	VUW 242/1 E	VUW 282/1 E	units
Countries of Destination	GB, IE		
Maximum CH heat input	29.3 (100,000)	34.2 (116,600)	kW (Btu/h)
CH heat output range	9.6-24.0 (32,800-81,900)	11.2-28.0 (38,200-95,500)	kW (Btu/h)
Maximum DHW heat input	29.3 (100,000)	34.2 (116,600)	kW (Btu/h)
Maximum DHW heat output range	9.6-24.0 (32,800-81,900)	11.2-28.0 (38,200-95,500)	kW (Btu/h)
DHW flow rate @ 35 °C rise	10	11.5	l/min
Mains water pressure required for max. flow rate	0.8	1.0	bar
Minimum water flow rate	2.7	2.7	l/min
Mains water pressure required for min flow rate	0.3	0.3	bar
Maximum inlet water pressure	10	10	bar
Inlet gas working pressure required (Natural Gas)	20	20	mbar
Gas supply (G20) Gross C.V. (s.t.)	37.8	37.8	MJ/m^3
Gas burner pressure max. rate	10.0	10.6	mbar
Gas burner pressure ignition rate	2.0	2.0	mbar
Gas rate max (DHW)	2.79	3.26	m^3/h
Main burner jet size	16 x 7/120	18 x 7/120	no. x size
CH flow temperature range	40-90	40-90	°C
Minimum CH water flow (for 20 °C rise)	1,032	1,204	l/h
Pump pressure available	0.25	0.25	bar
8l expansion vessel pre-charge pressure	0.75	0.75	bar
Maximum CH system pressure	3.0	3.0	bar
Connections			
Heating flow / return	22	22	mm
Cold water inlet	15	15	mm
DHW outlet	15	15	mm
Gas inlet	15	15	mm
Pressure relief discharge pipework (min)	15	15	mm
Weight	47	48	kg
Primary water content	0.7	0.7	litres
Electrical supply			
Voltage	230/50	230/50	V~/Hz
2 x internal fuses	2	2	A
1 x internal fuse	1.25	1.25	A
external fuse	3	3	A
Power input	130	130	W

Supplementary LPG information on page 59.

2.2 Dimensions

(All dimensions in mm)

1a Air/flue duct to the rear
1b Air/flue duct to the side
2 Appliance bracket
3 Heating system return (22 mm)
4 Cold water connection (15 mm)
5 Gas connection (15 mm)
6 Hot water connection (15 mm)
7 Heating system flow (22 mm)
8 Pressure relief valve outlet ($^3/_4$ in BSP)

* with standard horizontal flue accessory.
(max. = 2965 mm with extensions)

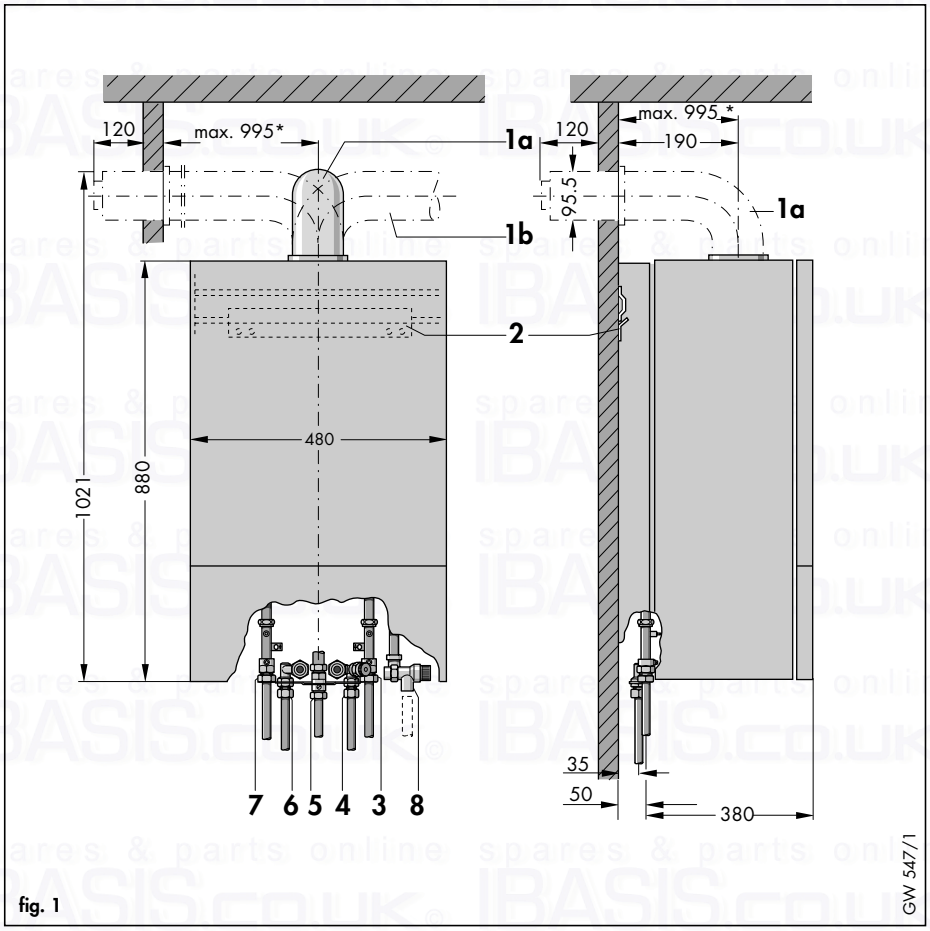

fig. 1

2.3 Boiler connections

1 Compression union (flow of heating system)
2 Service valve (flow of heating system)
3 Domestic hot water connection
4 Compression Union (gas)
5 Gas service valve (supplied with the boiler)
6 Cold water connection with shut-off valve
7 Service valve (return of heating system)
8 Compression union (return of heating system)
9 Pressure relief valve

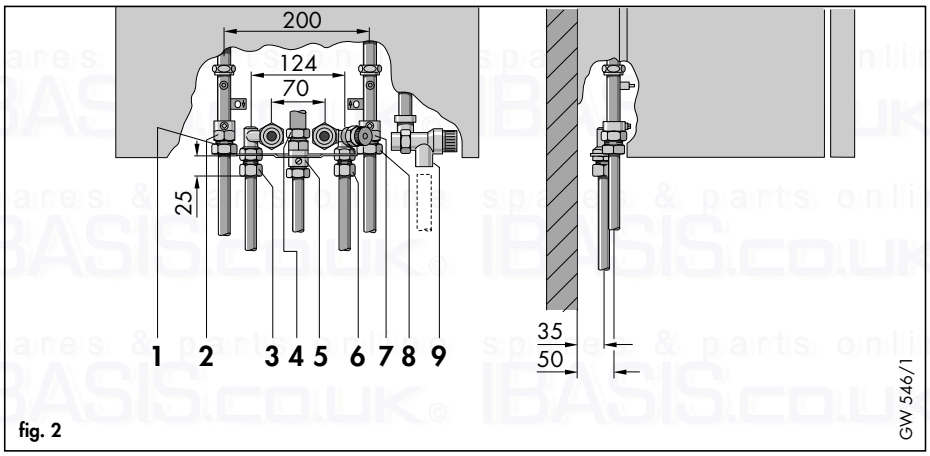

fig. 2

2.4 Function diagram

1 Air duct
2 Air pressure switch
3 Combustion chamber
4 Temperature sensor (NTC)
5 Ignition electrodes
6 Modulating burner
7 Overheat thermostat
8 Fully modulating automatic gas valve
9 DHW heat exchanger
10 Indicator lights (LED's)
11 Maximum radiator temperature control
12 Maximum hot water temperature control
13 Central heating control and lockout reset
14 Main on/off control
15 CH flow service valve
16 Gas service valve
17 Flue gas duct
18 Fan
19 High efficiency heat exchanger
20 Flame sensing electrode
21 Differential pressure switch
22 Expansion vessel charging valve
23 Expansion vessel
24 Automatic air vent
25 Circulating pump
26 Diverter valve
27 Water switch (DHW)
28 Water section
29 Temperature and Pressure gauge
30 Automatic bypass valve
31 Pressure relief valve
32 CH return service valve
33 Cold water shut off valve

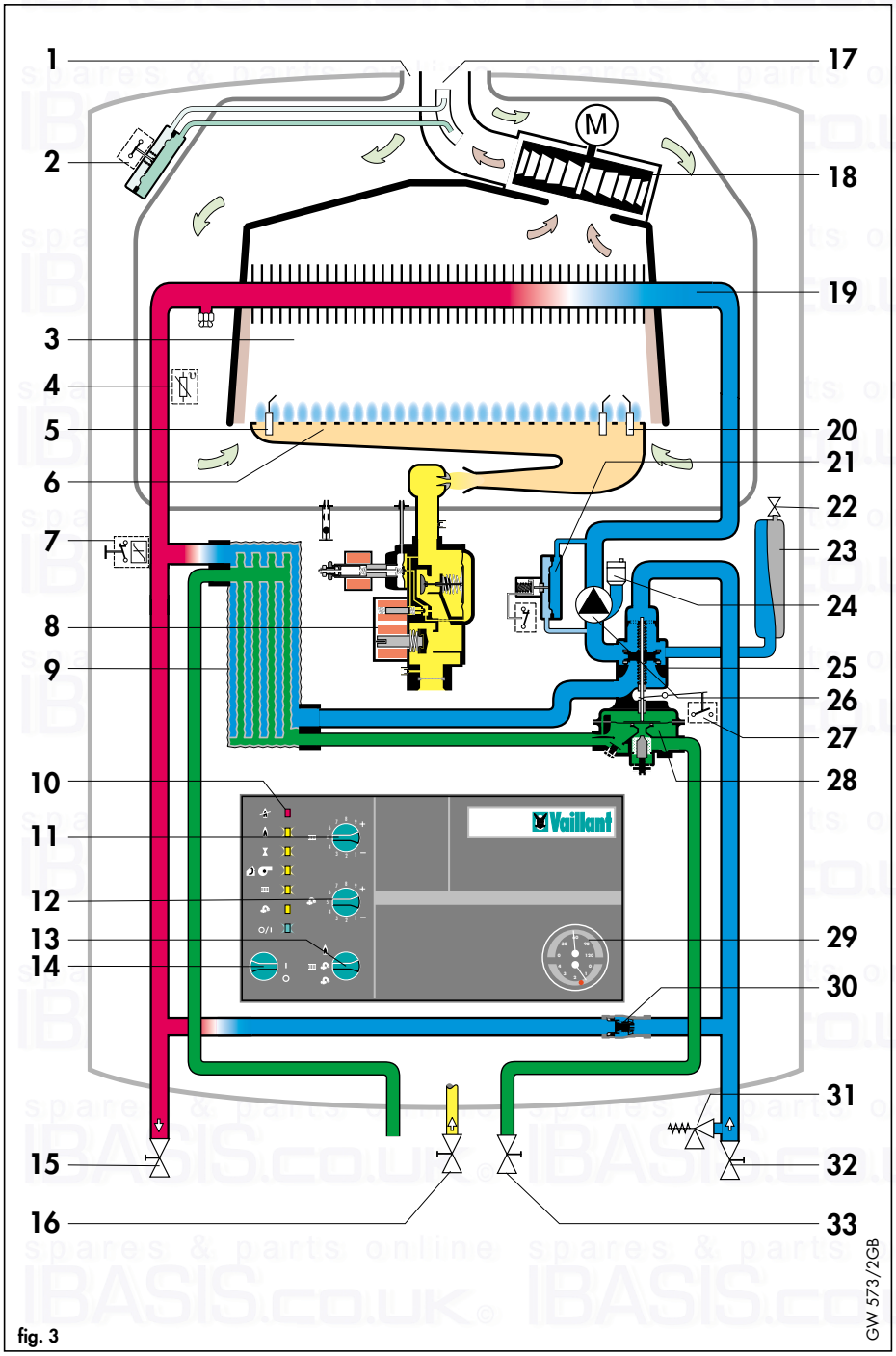

fig. 3

3. General requirements

3.1 Related documents

The installation of the boiler must be in accordance with the relevant requirements of Gas Safety (Installation and Use) Regulations 1994, Health and Safety Document No. 635 (The Electricity at Work Regulations 1989), BS7671 (IEE Wiring Regulations) and the byelaws of the local Water Undertaking. It should also be in accordance with the relevant requirements of the Local Authority, Building Regulations, Building Standards (Scotland) Regulations and the relevant recommendations of the following British Standards:-

BS 5440: Flues and ventilation of gas fired boilers not exceeding 60 kW:
- Part 1: Flues
- Part 2: Ventilation

BS 5449: Specification for forced circulation hot water for domestic premises.

BS 5546: Specification for gas hot water supplies for domestic premises.

BS 6700: Services supplying water for domestic use within buildings and their curtilages.

BS 6798: Specification for installation of gas fired boilers not exceeding 60 kW input.

BS 6891: Specification for installation of low pressure gas pipework up to 28 mm (R1) in domestic premises (2nd family gas).

BS 7593: Treatment of water in domestic hot water central heating systems.

BRITISH GAS PUBLICATION DM2: Guide for Installation in Timber Framed Housing

Important

The appliance must be installed and serviced by a competent person as stated in the Gas Safety (Installation and Use) Regulations 1994

3.2 Boiler location

The location chosen for the boiler must permit the provision of a satisfactory flue termination. The location must also provide adequate space for servicing and air circulation around the boiler. The boiler may be installed in any room, although particular attention is drawn to the requirements of BS7671 (I.E.E. Regulations) and, in Scotland, the electrical provisions of the Building Standards (Scotland) Regulations, in respect of the installation of a boiler in a room containing a bath or shower.

(Note: Where a room sealed boiler is installed in a room containing a bath or shower, any electrical switch or boiler control utilising mains electricity should be so situated that it cannot be touched by a person using the bath or shower).

Where the installation of the boiler will be in an unusual location, special procedures may be necessary and BS 5546 and BS 6798 give detailed guidance on this aspect.

The boiler must be mounted on a flat, vertical wall, which must be sufficiently robust to take the weight of the boiler. The boiler may be installed on a combustible wall, subject to the requirements of the Local Authorities and Building Regulations.

A compartment used to enclose the boiler must be designed and constructed specifically for this purpose. (An existing cupboard or compartment may be used provided that it is modified for the purpose). Details of essential features of cupboard/compartment design including airing cupboard installations are given in BS 6798.

If the boiler is to be fitted in a timber framed building, it should be fitted in accordance with British Gas Publication DM2 'Guide for Gas Installations in Timber Framed Housing'.

3.3 Gas supply

The gas supplier should ensure the availability of an adequate supply of gas.

A gas meter may only be connected to the service pipe by the supplier of gas or their contractor.

An existing meter should be checked to ensure that it is capable of passing the rate of gas supply required.

Installation pipes should be fitted in accordance with BS 6891.

Pipework from the meter to the boiler must be of an adequate size. Do not use pipes of a smaller size than the boiler gas connection (15 mm).

The complete installation must be tested for soundness and purged as described in BS 6891.

3.4 Flue system

The standard horizontal flue system (Art. No. 300 807) is suitable for installations up to 995 mm measured from the centre of the boiler flue outlet to the outside face of the wall (A, fig. 4). Flue extensions (Art. No. 300 802) are available to extend this length up to 2965 mm. Both 90° elbows (Art. No. 300 808) and 45° bends (Art. No. 300 809) are also available to increase siting flexibility.

A vertical flue system is also available (Art. No. 300 800).

TURBOmax boilers may also be used in SE- duct applications (SE- duct flue system available Art. No. 300810)

Refer to the flue installation instructions for full details.

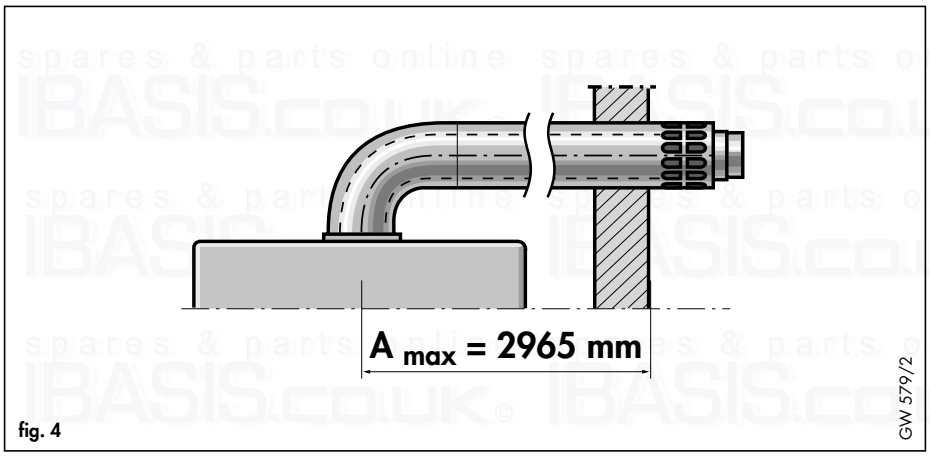

fig. 4

spares & parts online IBASIS.CO.UK

3.4.1 Flue Termination

1. The terminal must be positioned such that the combustion products can disperse freely at all times.

2. In certain weather conditions a plume of water vapour may be visible from the flue terminal. Positions where this could be a nuisance should be avoided.

3. If the terminal is fitted less than 2m above a balcony, above ground or above a flat roof to which people have access, then a suitable guard must be provided and fitted (available from Tower Flue Components, Tonbridge, TN9 1TB: reference TFC type K3).

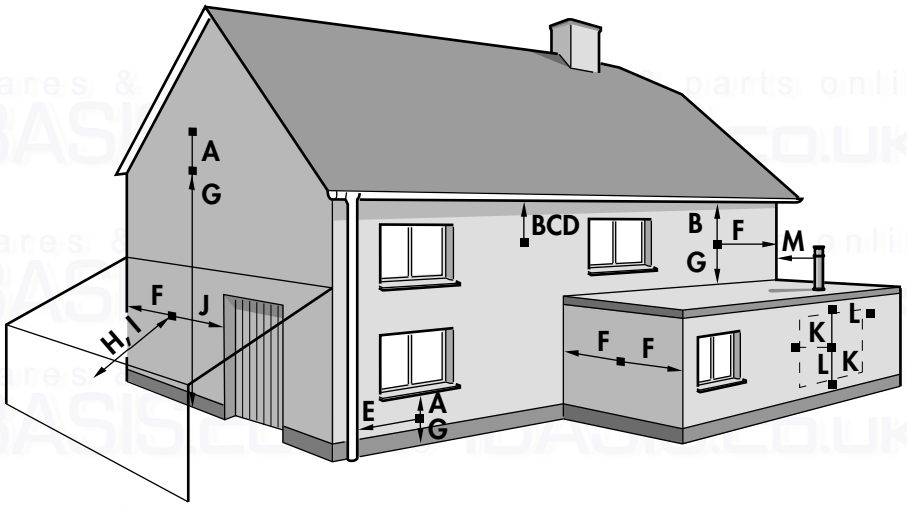

fig. 5

Table 1:
Terminal position for fan-assisted flue (minimum distance - see fig. 5)

	mm
A- Directly below an openable window or other opening (e.g. air brick)	300
B- Below gutters, soil pipes or drain pipes	25
C- Below eaves	25
D- Below balconies (below car port roof	25 200)
E- From vertical drain pipes and soil pipes	25
F- From internal or external corners	25
G- Above ground or balcony level	300
H- From a surface facing a terminal	600
I- From a terminal facing a terminal	1200
J- From an opening in a car port (e.g. door, window) into a dwelling	1200
K- Vertically from a terminal on the same wall	1500
L- Horizontally from a terminal on the same wall	300
M- Distance from adjacent wall for Vertical Flue	500

Note: Vertical flues must not terminate within 600 mm of an openable window, air vent or any other ventilation opening.

Where a terminal is fitted less than 1m below a plastic gutter or less than 0.5 m below painted eaves or any other painted surface then a suitable shield at least 1m long should be fitted to protect the surface.

3.5 Air supply

Detailed recommendations for air supply are given in BS 5440: Part 2.

It is not necessary to have an air vent in the room or internal space in which the boiler is installed.

3.5.1 Cupboard or compartment air supply

TURBOmax Room Sealed Combination Boilers are very high efficiency appliances.
As a consequence the heat loss from the appliance casing during operation is very low. For cupboard and compartment installations it is therefore not necessary to provide any high or low level permanent air vents for cooling purposes.

3.6 Electricity supply

A 230 V~ 50Hz single phase electricity supply fused to 3 amps must be provided in accordance with the latest edition of BS7671 (I.E.E. Wiring Regulations) and any other local regulations that may apply.

THIS APPLIANCE MUST BE EARTHED. The method of connection to the mains electricity supply must provide a means of completely isolating the boiler and its ancillary controls. Isolation is preferably by the use of a fused three pin plug and unswitched shuttered socket outlet, both complying with the requirements of BS 1363. Alternatively, a 3 Amp fused double-pole switch with a 3mm contact separation on both poles may be used.

3.7 Guide to system requirements

3.7.1 Water circulation system

Detailed recommendations for the water circulation system are given in BS 6798 and BS 5449: Part 1 (for small bore and micro bore central heating systems).

Pipework not forming part of the useful heating surface should be insulated to help prevent heat loss and possible freezing, particularly where pipes are run through roof spaces and ventilated underfloor spaces.

Draining taps must be located in accessible positions which permit the draining of the whole system including the boiler and the hot water system. Draining taps should be at least 1/2 in. BSP nominal size and be in accordance with BS 2879.

The boiler is suitable for use with minibore or microbore systems. Copper tubing to BS 2871: Part 1 should be used for water carrying pipework. All capillary joints in the DHW pipework must be made with lead free solder.

Particularly where a new boiler is to be fitted to an existing system, it is good practice that the system is thoroughly cleansed. This cleasing should take place prior to the fitting of the new boiler and be in accordance with BS 7593.

For advice on the application of system cleansers contact Sentinel, Grace Dearborn Ltd, Widnes, Cheshire, WA8 8UD.
Tel: 0151 4951861.

3.7.2 Filling and make up

The system should be filled with water via a separate filling point fitted at a convenient position on the heating circuit. Where local Water Authority Regulation allows, a temporary connection to the mains may be used (fig. 6). The connection must be removed when filling is completed. Where local Water Authority Regulation does not allow temporary connection, a sealed system filler pump with break tank must be used. The heating system will not be filled automatically from the domestic hot water side.
(Alternative methods of filling sealed systems are given in BS 5449).

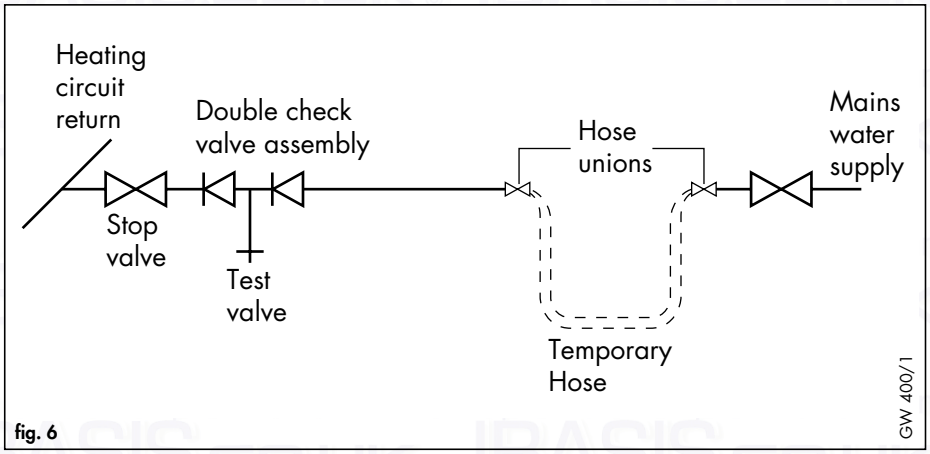

fig. 6

3.7.3 Pressure relief valve

A pressure relief valve is provided ready assembled within the boiler (5, fig. 7). This safety device is required on all sealed C.H. systems and is pre-set at 3 bar and provided with a 3/4 in. BSP connection for a discharge pipe, which must be of no less than 15 mm diameter.

3.7.4 Pressure and temperature gauge

This is factory fitted to the boiler and indicates the primary circuit pressure to facilitate filling and testing, as well as showing the temperature of the central heating system water.

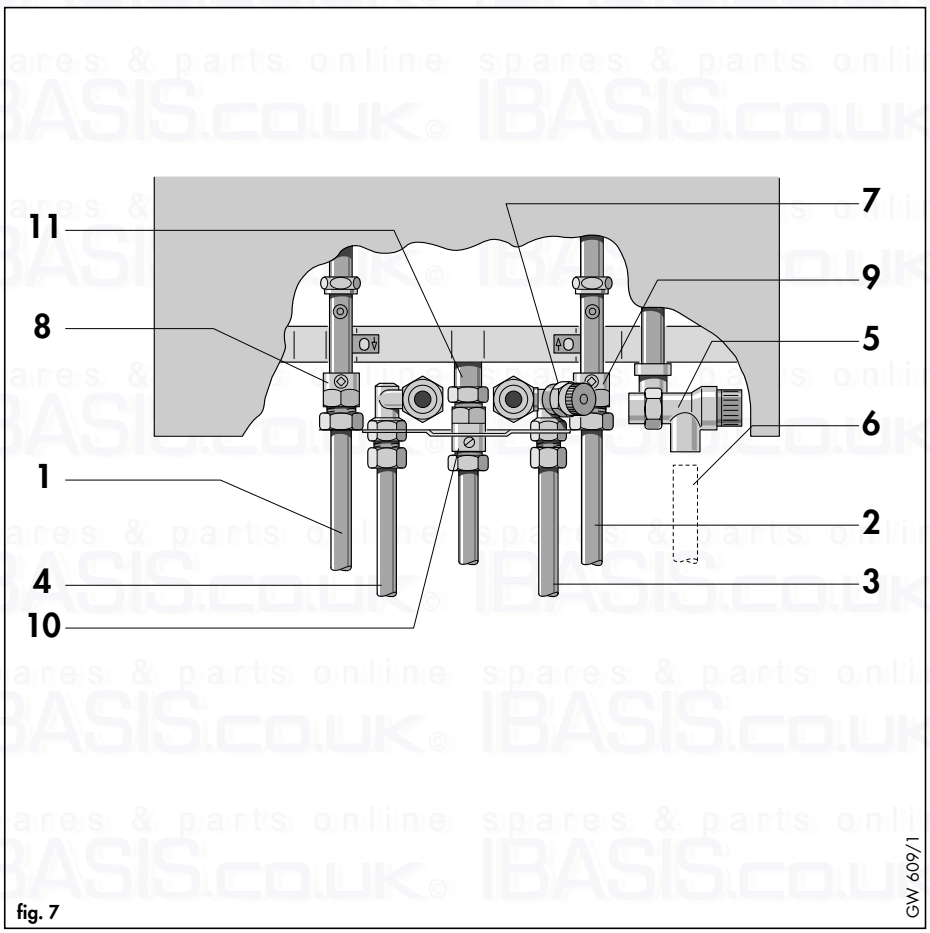

fig. 7

3.7.5 Expansion vessel

An expansion vessel is incorporated into the boiler suitable for a sealed heating system with a maximum water content of 100 litres.

If the nominal capacity of the built in expansion vessel is not sufficient for the heating system (for instance in case of modernisation of old open systems) an additional expansion vessel can be installed external to the boiler. It should be fitted in the return pipe as close as possible to the boiler in accordance with BS 5449: Part 1.

Guidance on the sizing of an additional expansion vessel is given in Table 2.

3.7.6 Circulating pump

The circulating pump is included in the boiler. The pump head available for the heating system is shown in fig. 8.

3.7.7 System by-pass

An automatic system by-pass is included within the boiler. The boiler is suitable for use in systems with thermostatic radiator valves and no additional by-pass is required.

3.7.8 Venting

The boiler is fitted with an automatic air vent. Additional provision should be made to enable the heating system to be vented during filling and commissioning either by automatic air vents or manually.

3.7.9 DHW expansion vessel accessory

A DHW expansion vessel kit (Art. No. 8070) is available as an optional accessory from Vaillant Ltd. This expansion vessel kit should be fitted to the boiler whenever either a stop valve of the loose jumper type or a non return valve are present in the cold water mains supply to the boiler (fig. 9).

Table 2: Sizing of Additional Expansion Vessel

Safety valve setting (bar)	3.0	
Initial system pressure (bar)	1.0	1.5
Total water content of system	**VESSEL VOLUME (L)**	
litres		
25	2.7	3.9
50	5.4	7.8
100	10.9	15.6
125	13.6	19.5
150	16.3	23.4
175	19.1	27.3
200	21.8	31.2
225	24.5	35.1
250	27.2	39.0
275	30.0	42.9
300	32.7	46.8
325	35.7	50.7
350	38.1	54.6
375	40.9	58.5
400	43.6	62.4
425	46.3	66.3
450	49.0	70.2
475	51.8	74.1
500	54.5	78.0
For system volumes other than those given above, multiply the system volume by the factor across	0.109	0.156

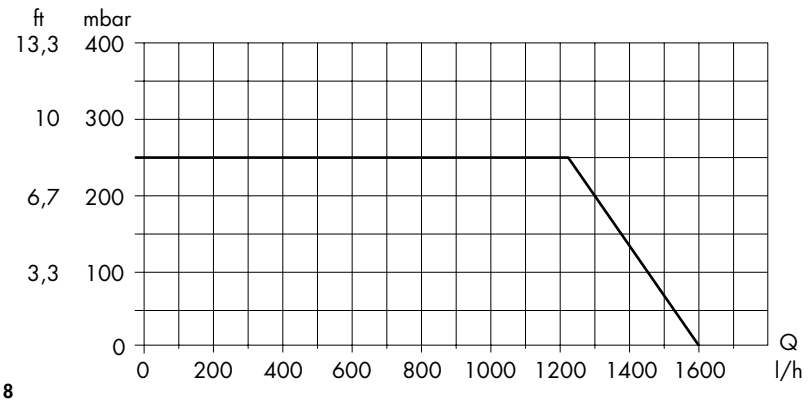

fig. 8

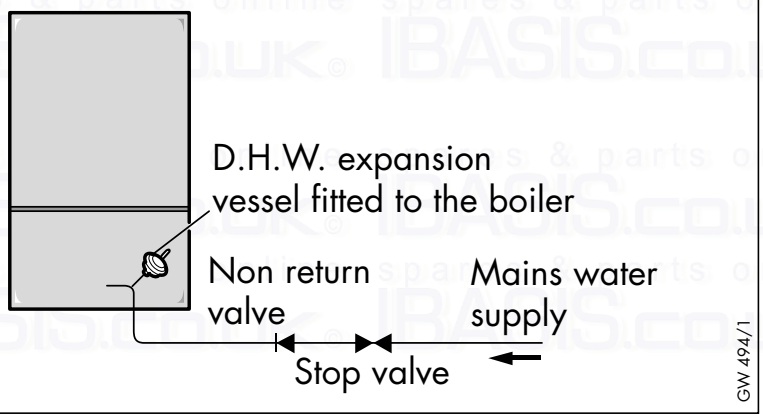

fig. 9

4. Boiler installation sequence

4.1 General

The boiler should be mounted on a flat and vertical area of wall of sufficient area for the boiler plus the required minimum clearances for installation and servicing (fig. 10). These are shown on the installation template supplied with the boiler and are:

5 mm either side of the boiler
100 mm below the boiler*
165 mm on top of the boiler
500 mm in front of the boiler **

* 150 mm where optional pre-installation connecting group (Art. no. 8015) is used.

** This clearance is only required to enable easier access to the boiler for servicing and may be provided by an openable door, etc.

Note: If the boiler is to be fitted in a timber framed building, it should be fitted in accordance with British Gas publication reference DM2 'Guide for gas installations in timber framed housing.'

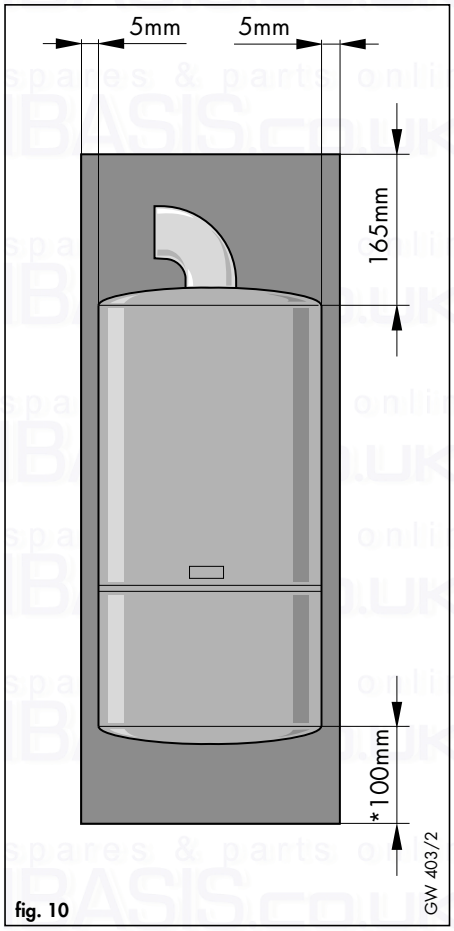

fig. 10

4.2 Boiler delivery

The TURBOmax is delivered in two packs:

a. the carton containing the boiler
b. separately boxed flue accessory, either:

- 1m horizontal flue accessory (Art. No. 300 807); or
- vertical flue accessory (Art. No. 300 800)

spares & parts online IBASIS.CO.UK

4.2.1 Installation accessories

Table 3 lists the standard and optional accessories which are available for the TURBOmax combination boilers.

4.2.2 Unpack the boiler (fig. 11)

Open the boiler carton and remove:
a. protective cardboard sheet
b. top and bottom decorative panels
c. polystyrene packaging

Note: Care should be taken not to scratch the white surface of the boiler casing.

Packed in the boiler carton are the following:

- boiler installation template
- boiler hanging bracket
- gas service valve
- fixing screws and wallplugs
- installation and user instructions
- flue restrictor
- domestic hot and cold water connections and straddle bracket

Table 3: Installation Accessories

Standard Accessories	Art. No.
1. Air/flue duct and terminal accessory	300 807
Optional Accessories	**Art. No.**
1. Vertical air / flue duct (including terminal)	300 800
2. Pitched roof adjustable roof tile (for use with vertical air/flue duct)	9076
3. Flat roof penetration collar (for use with vertical air/flue duct)	9056
4. 1 m air /flue duct extension	300 802
5. 2 m air / flue duct exension	300 803
6. Additional 90° elbow for air / flue duct	300 808
7. Additional 45° bends (pair) for air / flue duct	300 809
8. Additional air / flue duct joint clamps (pair)	300 806
9. Se- duct flue kit	300 810
10. Internal flue fixing kit	8098
11. Pre - installation connecting group (includes 300 813)	8015
12. Vaillant boiler replacement connection accessory	300 813
13. Pipe cover accessory	8099
14. Plug in 24 hour central heating timeclock	300 820
15. Plug in 7 day central heating timeclock	300 821

4.3 Preparation of boiler location

4.3.1 Select position of boiler.

Refer to Section 3.2 'Boiler Location' for information regarding siting the boiler. In general the boiler must be positioned such that:

- there is adequate space around the boiler for service and maintenance
- the boiler can be correctly flued, i.e. the flue terminal position is sited in accordance with Section 3.4.1 and the air / flue duct can be installed in accordance with the flue installation instructions supplied.
- all necessary pipework can be connected, including the pressure relief valve discharge pipe.

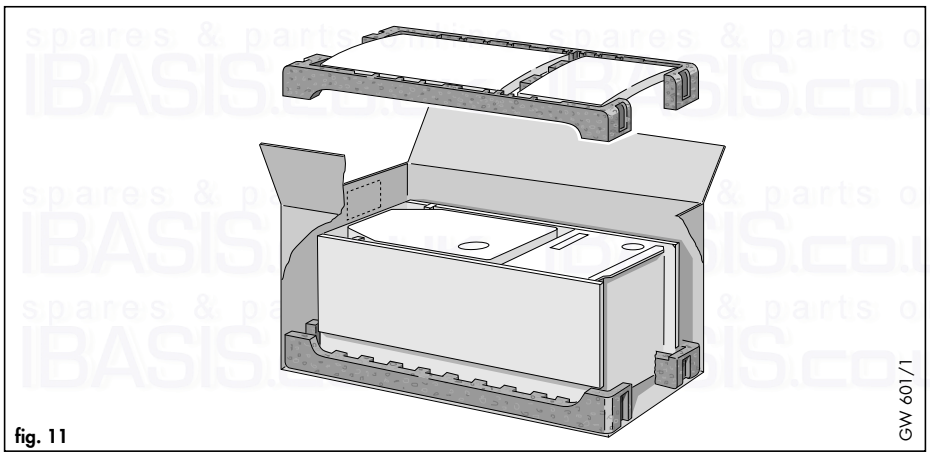

fig. 11

4.3.2 Using the boiler template (fig. 12)

4.3.2.1 Once a suitable location has been chosen, fix the paper installation template on the wall ensuring that the centerline of the template is vertical using a spirit level or plumb line.

The template shows the positions of the fixing holes for the boiler hanging bracket (2) and the optional pre-installation connection group (3). The template also shows the position of the flue exit hole, for use where the air flue duct is to be installed directly to the rear of the boiler, e.g. where the boiler is installed on an outside wall and the flue terminates directly behind.

4.3.2.2 A Pre - installation connection group (Art. No. 8015) is available as an optional accessory. It is used to allow the installation of the central heating and domestic hot water pipework without the need to have the boiler in position. Where an old existing Vaillant boiler is to be replaced, the boiler replacement accessory (Art. No. 300 813) can be used to allow easy connection on the new boiler to the existing connecting group. Refer to the instructions supplied separately with these accessories.

4.3.2.3 Mark on the wall the positions of the hanging bracket fixing holes (2). Drill two holes Ø 10 mm for the hanging bracket. (Note: Use the alternative fixing holes where necessary).

4.3.2.4 Rear exit flue.
Mark the position of the centre of the flue duct and its circumference, e.g. by drilling through the template (1, fig. 12).

4.3.2.5 Other flue options.
Refer to the installation instructions supplied with the flue accessory for detailed instructions on other flue options such as vertical RSF flues, flue runs to the side of the boiler and the use of additional flue elbows and bends etc.

4.3.2.6 Remove the template from the wall and plug the drilled holes using the wallplugs supplied.

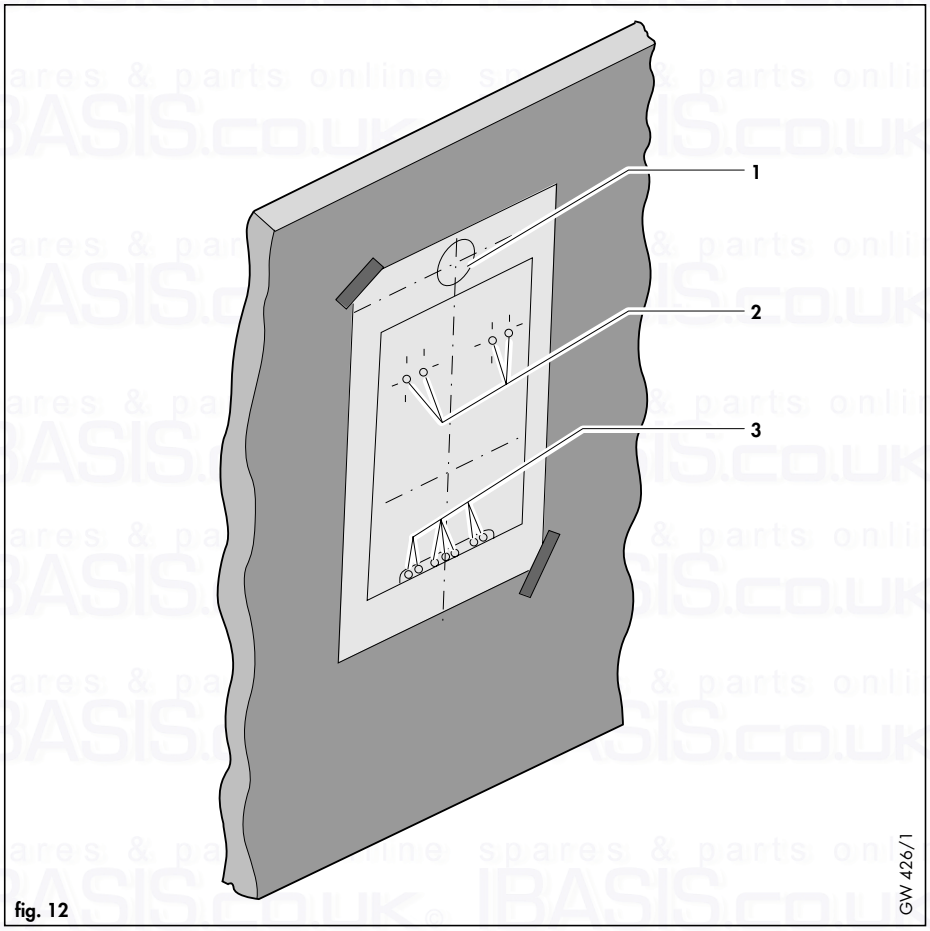

fig. 12

4.3.3 Fitting the boiler hanging bracket.

Secure the hanging bracket to the wall using the screws supplied. (If the condition of the wall is poor it may be necessary to use additional or alternative fixings to ensure adequate support).

NOTE: If the boiler is to be fitted in a timber framed building ensure that the brackets are secured to a substantial part of the timber frame capable of taking the weight of the boiler.

4.4 Installing the flue system

At this stage install the flue system (refer to separate installation instructions supplied).

4.5 Mounting the boiler

4.5.1 Preparation

Remove the boiler from the carton.

Lay the boiler on the floor and remove the white boiler bottom cover by removing two screws (1, fig. 51) and slackening two screws (2, fig. 51). Do not remove boiler side panels. Remove the two plastic sealing caps from the domestic water connections.

Fit the pre-assembled cold water inlet and hot water outlet pipes with straddle bracket (1,2,3, fig. 15) to water connections on boiler (4, fig. 15) using washers provided.

4.5.2 Fitting the boiler (fig. 13)

Lift the boiler up to the wall so that it is slightly above the hanging bracket.

Note: Lift the boiler from under the front edge of the side panels.
Do not lift the boiler by the control box. Do not attempt to lift the boiler without the side panels or side casing fitted.

Lower the boiler slowly onto the hanging bracket so that the cross member at the top rear of the boiler fully engages into the hanging bracket.

4.5.3 Pipework connections (fig. 14)

Figure 14 shows the central heating, domestic hot water, mains cold water, gas and pressure relief valve connections.

4.5.3.1 Central heating flow and return

Before connecting the heating circuit to the appliance, all pipework and radiators must be thoroughly flushed to remove any installation debris.

Connect the flow and return pipes to the central heating service valves (8) and (9) on the appliance using the 22 mm compression connections.

4.5.3.1.1 Top pipework connection

If it is desired to run heating and water pipework to above the boiler, the purpose provided voids in the left and right sides of the boiler casing may be used (see fig. 16).

Note: To allow fitting of the bottom boiler cover, the left hand tab (2, fig. 16) should be folded upwards where pipes are fitted in the left hand void.

Where pipes are installed in these voids, a method of disconnection e.g. a compression connector (1, fig. 16) must be provided to allow easy removal of the boiler from the wall, if required.

4.5.3.2 Cold mains water inlet and hot water outlet (fig. 14)

Flush out all foreign matter from the mains supply pipe before connecting to the boiler.

Connect the mains water supply (3) and hot water outlet pipes (4) to the 15 mm compression connections.

Note: The boiler has a maximum domestic water working pressure of 10 bar. If the cold mains supply pressure exceeds 10 bar, a pressure reducing valve must be fitted to the cold water inlet.

4.5.3.3 Pressure relief valve discharge

The appliance contains the pressure relief valve required for a sealed system (5). Connect a discharge pipe not less than 15 mm diameter to the outlet of this valve.

This discharge pipework should be as short as possible and installed with a continuous fall away from the boiler. The pipe should terminate in a position which ensures that any discharge of water or steam from the valve cannot create a hazard to persons in or about the premises, or cause damage to any electrical components or external wiring, and the point of discharge should be clearly visible. The discharge must not terminate above a window, an entrance or any type of public access. The installer must consider that the pipe could discharge boiling water.

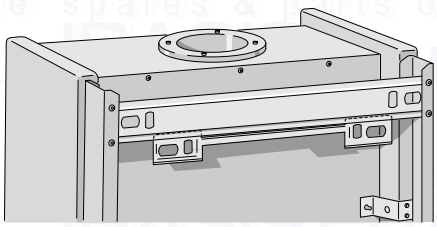

fig. 13

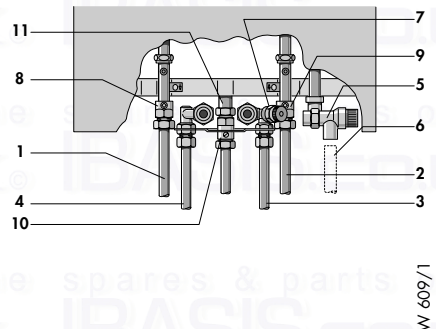

fig. 14

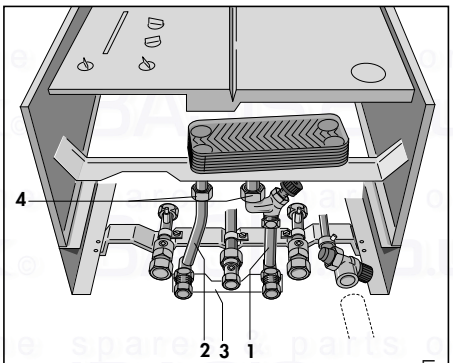

fig. 15

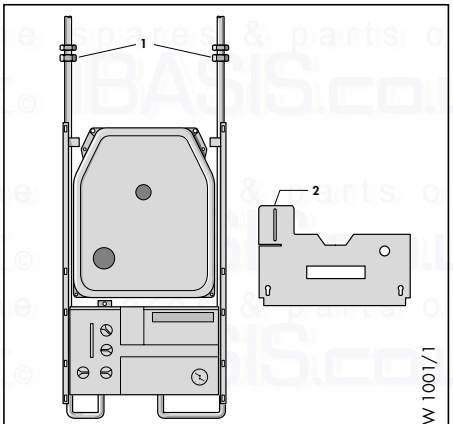

fig. 16

4.5.3.4 Gas supply

The boiler is supplied with a 20 x 15 mm gas service valve (10, fig. 14). Fit the 20 mm compression fitting to the boiler gas inlet (11, fig. 14) and tighten. Install a gas supply pipe not less than 15 mm diameter and connect to the gas service valve. (Ensure the gas supply pipework is adequately sized such that a 20 mbar - (8" w.g.) - gas pressure is available at the boiler inlet at full flow rate). Tighten all union connections.

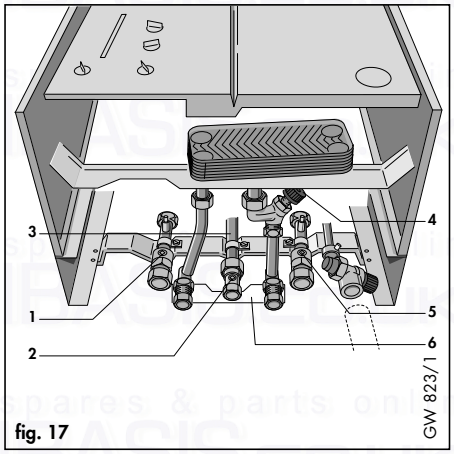

fig. 17

4.6 Connecting the flue assembly to the boiler

Note : A flue restrictor ring is supplied packed with the users and installation instructions.
The restrictor should be used under the following circumstances : -

Horizontal flues
Where a horizontal flue less than 1 m in length is used.
(DO NOT fit the restrictor where the horizontal flue is more than 1 m in length).

Vertical flues
Where a vertical flue less than 1 m (e.g. 1 m between the top of the boiler and the bottom of the vertical air / flue duct assemly) is used
(DO NOT fit the restrictor where the vertical flue is more than 1 m in length).

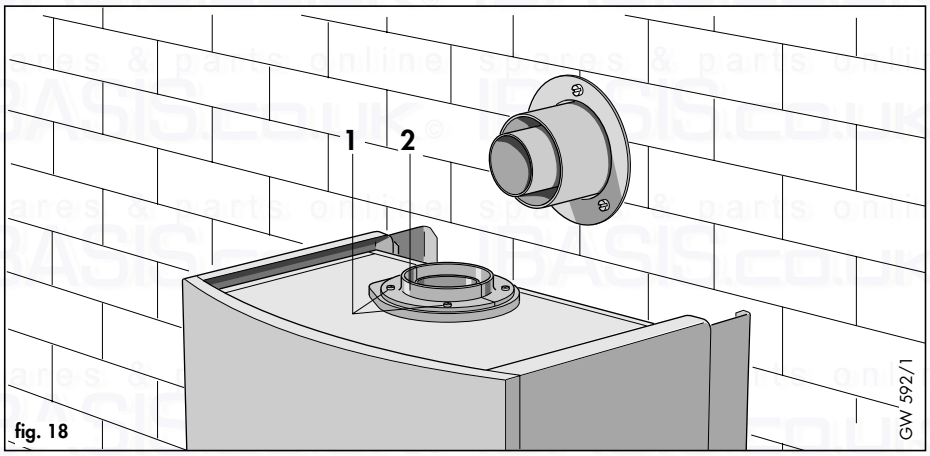

fig. 18

4.6.1 Horizontal Flue

Remove two screws (1, fig. 18) and take off one half ring (2, fig. 18). If necessary, fit the flue restrictor ring (Note : It will be necessary to remove both half rings if the flue restrictor ring is to be fitted. The flue restrictor ring should be placed on top of flue outlet directly below the two half rings see fig. 18a. One half ring should be replaced immediately).

Place a 63 mm diameter x 35 mm wide flue duct clamp (4, fig. 19) loosely over the flue duct (1, fig. 19). Place the 63 mm diameter x 25 mm wide flue duct clamp (5, fig. 19) over the flue gas connection on the boiler.

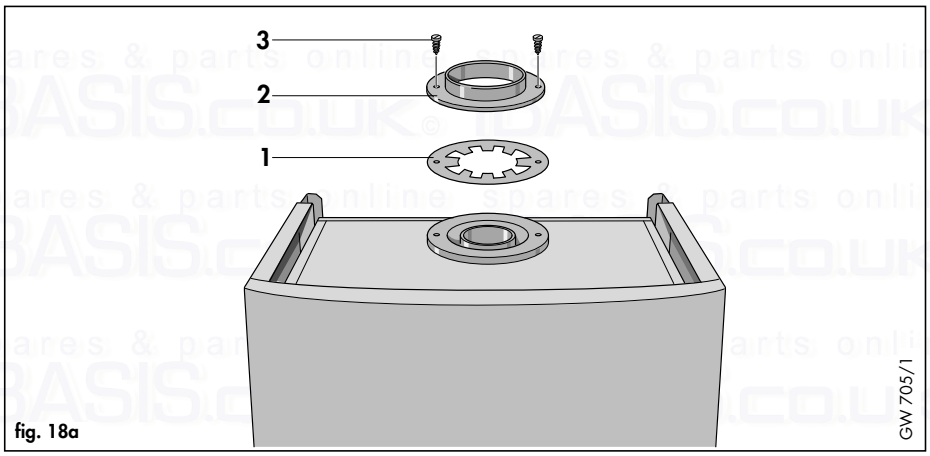

fig. 18a

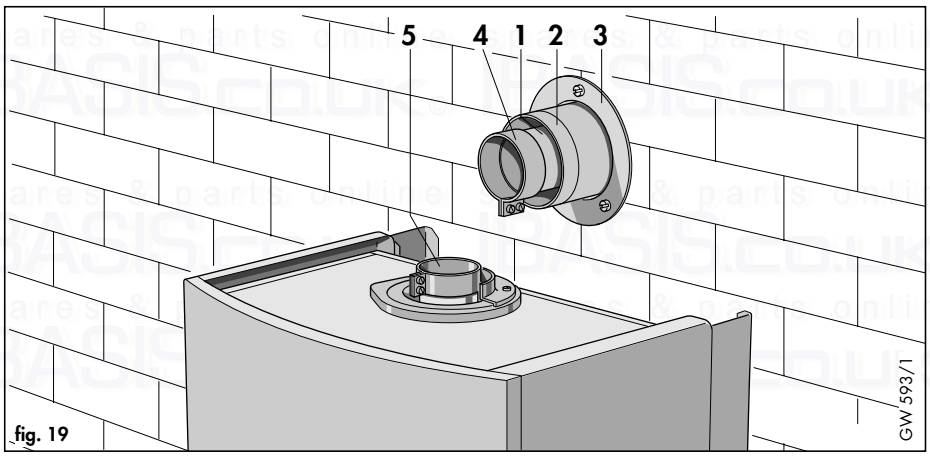

fig. 19

Loosen screws on the 95 mm diameter x 55 mm wide clamp (6, fig. 21) and push over the air duct.
Remove screws and sealing washer on the 95 mm diameter x 25 mm wide clamp (3, fig. 21) and push onto the flue elbow on the side to be connected to the appliance. Ensure the clamp is clear of the end of the elbow.
Push the flue elbow into the clamp (2, fig. 20) connected to the appliance flue gas duct and tighten the securing screws lightly.
Ensure that the elbow and air/flue duct line up and are closely butted together. Pull the clamp (4, fig. 20) over the joint between the flue gas duct and flue elbow. Ensure that the air/flue duct and terminal are correctly positioned. Tighten the securing screws on both clamps.

Note : Excessive tightening of these screws is not necessary. Ensure that the air / flue duct and terminal assembly is not displaced though the wall. Check that the air duct of the terminal still projects by 90 mm through the wall.

Refit the half ring 2, fig. 21. Pull the 95 mm diameter x 25 mm wide clamp (3, fig. 21) over the joint between the flue elbow and half rings. Refit the screws and sealing washer and tighten lightly.
Pull the 95 mm diameter x 55 mm wide clamp (6, fig. 21) over the joint between the flue elbow and air/flue duct. Tighten the securing screws on both clamps.
Drill two holes, 3 mm diameter through both air duct clamps into the air ducts at the most convenient positions (5, fig. 21). Take care not to penetrate the inner flue duct. Screw the clamps to the air ducts using the self tapping screws provided.

4.6.2 Vertical Flue

Remove the two half rings (2, fig. 18) and, if necessary, fit the flue restrictor ring.
(Note: It will be necessary to remove both half rings if the flue restrictor ring is to be fitted. The flue restrictor ring should be placed on top of flue outlet directly below the two half rings (see fig. 18A). One half ring should be replaced immediately).
Fit the 63 mm diameter x 68 mm wide flue duct sleeve (2, fig. 22) over the flue gas duct of the air/flue duct assembly.

Loosen the screws of the 95 mm diameter x 55 mm wide clamp (1, fig. 22) and push over the air duct of the air/flue duct assembly.

Lower the flue assembly until a gap of about 25 mm exists between the air duct of the air/flue duct and terminal assembly and the half rings on the appliance. The two ducts must not butt together.

Pull the sleeve (2, fig. 22) down over the flue connection of the appliance against the stop. Align the holes in the sleeve and boiler flue gas connector and secure with a self tapping screw (1, fig.23).

Note : The sleeve must not be screwed to the bottom of the flue gas duct of the air/flue duct assembly. This duct must be able to slide in order to absorb small movements of the roof structure.

Refit the two half rings. Pull the 95 mm diameter x 55 mm wide clamp down over the joint between the air/flue duct assembly and the half rings. Tighten the clamp screws (1, fig.24).

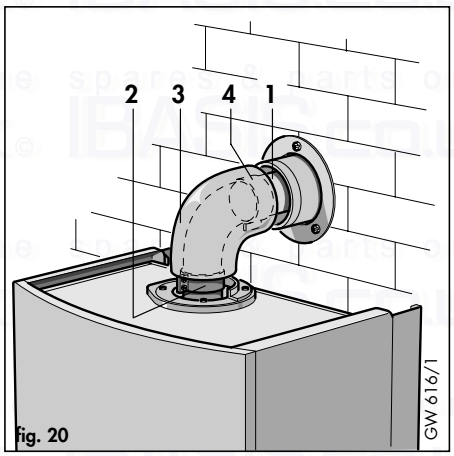

fig. 20

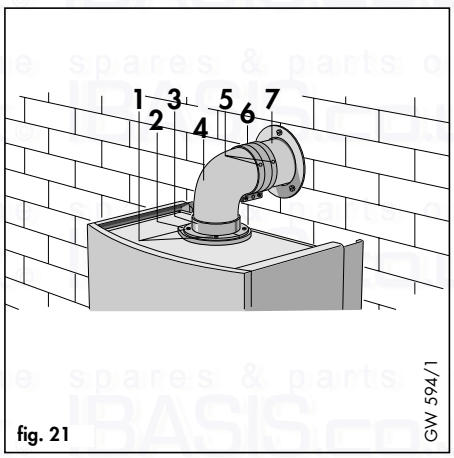

fig. 21

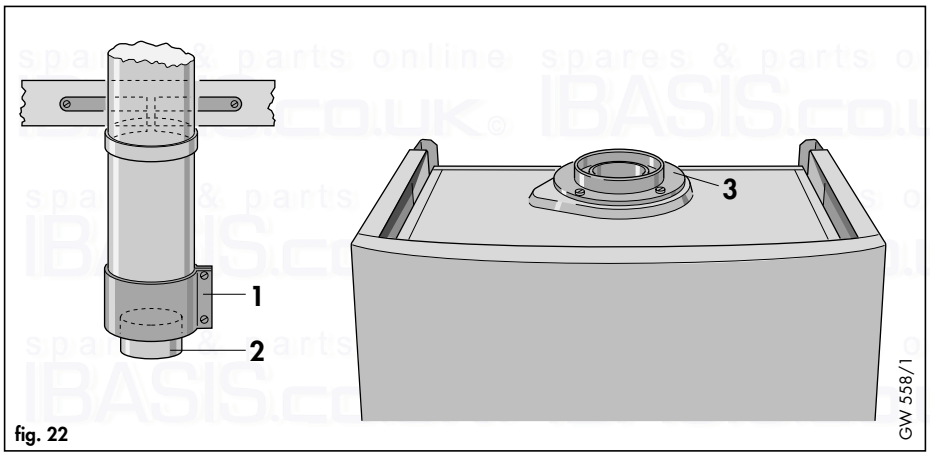

fig. 22

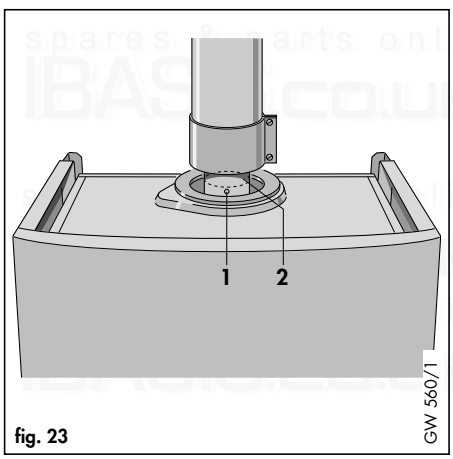

fig. 23

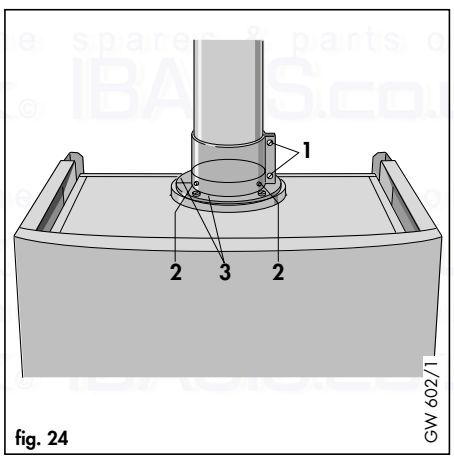

fig. 24

Drill two holes 3 mm diameter through the air duct clamp (2. Fig 24) ensuring that the drill does not penetrate the flue duct. Screw the clamp to the boiler half ring using the self tapping screws provided.

Note: The air duct clamp must not be screwed to the bottom of the air flue duct and terminal assembly. The air/flue duct and terminal assembly must be able to slide in the air duct clamp to absorb any slight movements in the roof structure.

4.7 Electrical installation

4.7.1 General electrical requirements

All electrical work shall be carried out by a competent person and shall comply with BS7671 (IEE Regulations).

The boiler is supplied for connection to a 230V~ 50Hz supply fused at 3A rating. Connection to the mains supply should be made via a fused 3 pin plug to an unswitched, shuttered socket, both complying with the requirements of BS1363. (Alternatively, connection may be made via a 3 Amp fused double pole isolator having a contact separation of at least 3mm in all poles and supplying the boiler and controls only).

The point of connection to the mains must allow complete electrical isolation of the boiler and its ancillary controls. It should be readily accessible and adjacent to the boiler. A 3 core flexible cord according to BS6500 tables 6, 8 or 16 (3x0.75 to 3x1.5 mm^2) should be used.

Warning: This appliance must be earthed

4.7.2 Connecting to mains supply

Slacken front panel fixing screw (1, fig. 25) and lower front panel. Remove terminal box cover by undoing screw (1, fig. 26)

Connect the power supply cord as follows (see fig. 27):-

green / yellow (earth) wire.... boiler terminal ⏚

Blue (neutral) wire..... boiler terminal N

Brown (live) wire..... boiler terminal L

Note: Do not use boiler terminal connections 7-8-9

IMPORTANT Ensure that all cords pass through the terminal box entrance grommets and are securely fixed by the cable clamps. Ensure that the power supply cord is connected such that the current carrying conductors become taut before the earthing conductor should the supply cord slip from the cable clamp.

Refit the terminal box cover after completion of all electrical components.

The cable clamp (1, fig. 28) is only meant as a mounting aid. A possible damage caused when mounting or removing it will not cause any malfunction of the appliance.

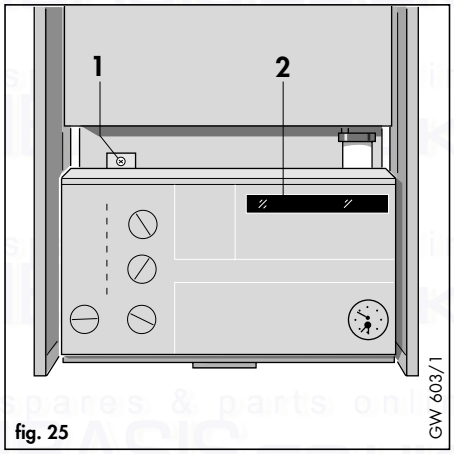

fig. 25

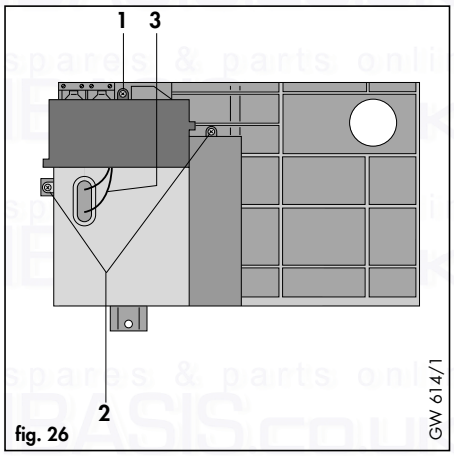

fig. 26

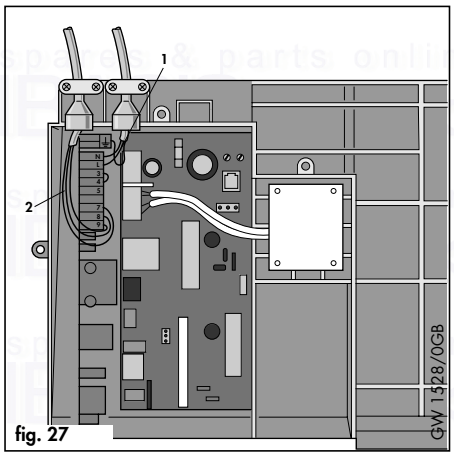

fig. 27

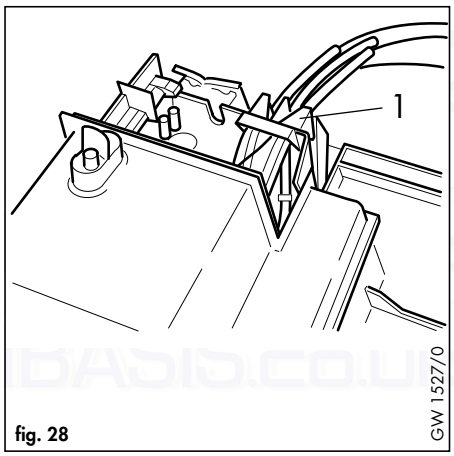

fig. 28

4.8 Controls

4.8.1 External electrical controls

The boiler terminals 3,4 and 5 are for connecting external controls such as a time switch and/or room thermostat.

Terminals 3 and 4 are linked together when the boiler is supplied. If external controls are used, this link must be removed, and the controls connected across terminals 3 and 4.

Terminal 5 is an additional neutral connection for external neutrals such as from the anticipator of a room thermostat.

Refer to Section 4.8.2 for full connection details.

4.8.2 Connection of external electrical controls

4.8.2.1 Connection details for programmable thermostat and boiler terminal strip (refer to fig. 29).

Fig. 29 shows the connection details where a programmable thermostat (time switch with built-in room thermostat) is used to control the boiler. (Important: The arrowed numbers indicate connection into the relevant terminal in the boiler terminal strip).

4.8.2.2 Connection details for external time switches and boiler terminal strip (refer to fig 29a).

Fig. 29a shows the connection details where a time switch is used without a room thermostat to control the boiler. (Important: The arrowed numbers indicate connection into the relevant terminal in the boiler terminal strip).

If a room thermostat is to be connected in addition to a time switch the wire between the time switch 'ON' terminal and boiler terminal 4 should be broken by the contacts of the room thermostat (see Schematic layout, fig. 30).

If a frost thermostat is to be fitted it should be connected in parallel across terminals 3 and 4.

4.8.2.3 Vaillant optional Plug-in timer Accessories

Refer to the instructions supplied with the optional plug in timer accessories for connection details.

Connection details for programmable thermostats

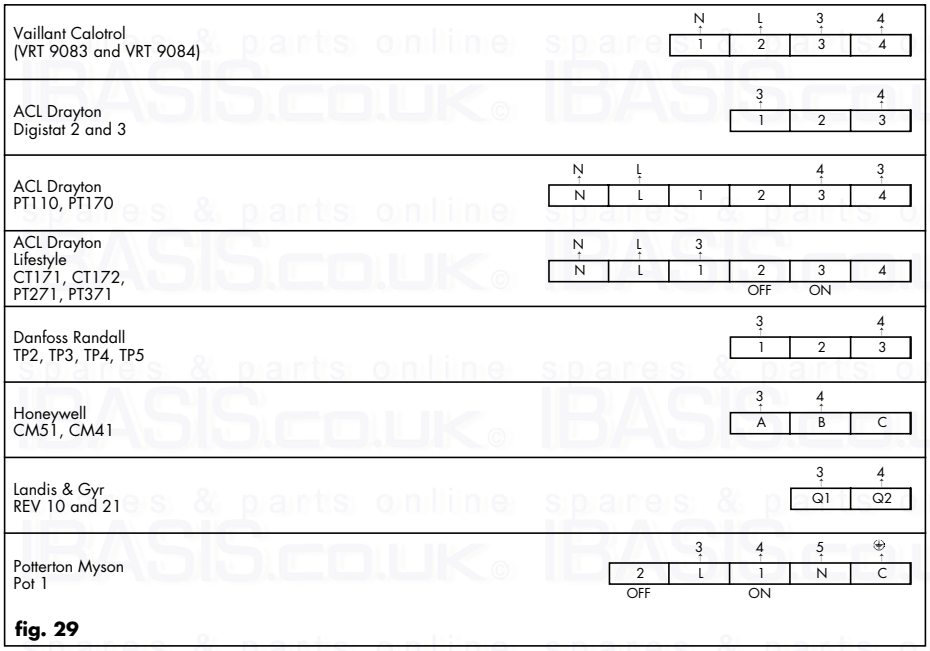

fig. 29

Connection details for time switch

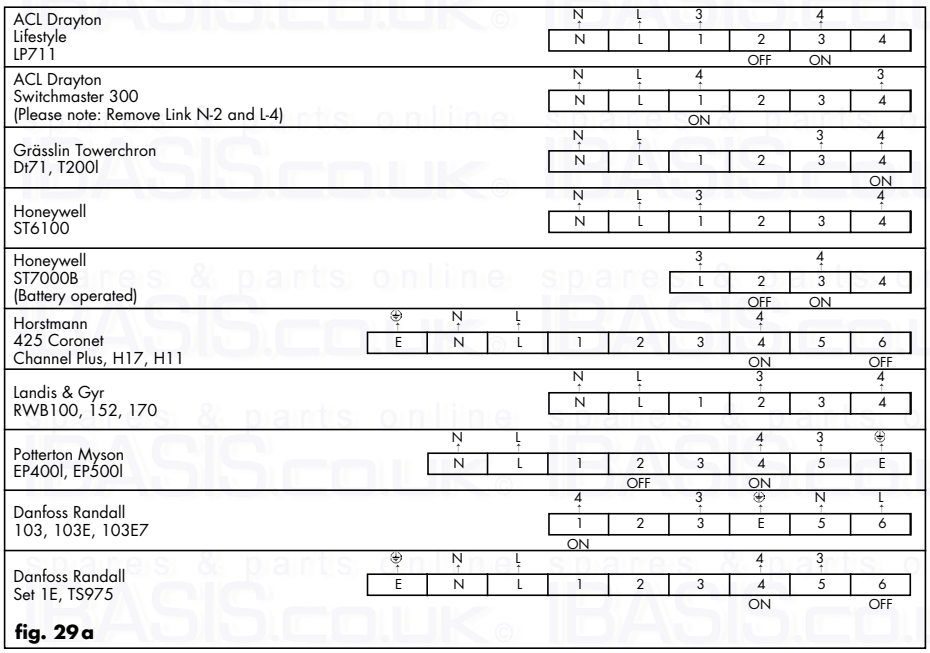

fig. 29a

Connection detail for room thermostat and time switch

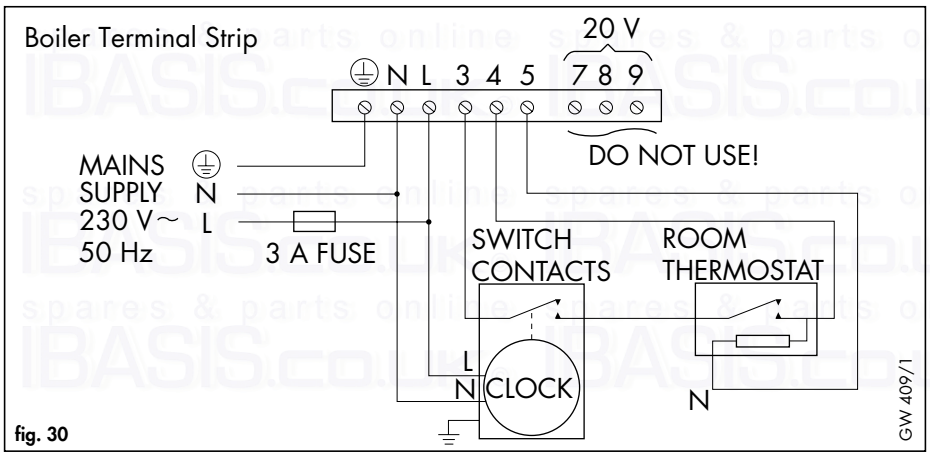

fig. 30

4.8.3 Thermostatic radiator valves

The boiler has a built-in automatic bypass valve making it ideal for use in systems with thermostatic radiator valves (no separate system bypass is required).

For optimum fuel economy it is recommended that where TRVs are used they are used in conjunction with a programmable roomstat or separate timer and room thermostat to ensure complete boiler shutdown when the heating demand is satisfied. (The radiator in the room containing the room thermostat should not be fitted with a TRV).

4.8.4 Circulating pump

The boiler incorporates a built-in circulating pump that is fully pre-wired. (No additional wiring is necessary). The pump incorporates an automatic overrun period after the boiler switches off.

4.8.5 Anti-cycling 'economiser' control

The boiler incorporates a built in anti-cycling control to ensure that energy wasteful short cycling of the boiler cannot occur. This control prevents the boiler from re-igniting for a pre-set period of 5 minutes after central heating operation. (The hot water operation is unaffected by this control and hot water can be drawn at any time).

Note: To temporarily override the anti-cycling control, turn the main on/off control to the "off" position (0), and then back to the "on" position (I) after a few seconds.

4.8.6 Frost protection

The boiler has an internal frost thermostat which is designed for protection of the boiler.
To protect remote or exposed parts of the heating system or property additional frost protection measures must be taken such as the installation of an external frost thermostat. This frost thermostat should be connected across the boiler terminals 3 and 4, in parallel with any external heating controls.

5. Commissioning

5.1 Preliminary electrical checks

Check the electrical installation by carrying out short circuit, earth continuity and resistance to earth tests and a check for correct polarity.

5.2 Gas supply

The complete gas installation including the gas meter must be inspected, tested for soundness and purged in accordance with BS 6891.

The gas supply to the boiler can be purged by slackening the gas service valve beneath the boiler (1, fig. 31). Ensure that there is adequate ventilation, extinguish naked flames and do not smoke whilst purging.

After purging, the gas service valve connection must be re-tightened and tested for soundness.
(The boiler itself does not require purging as this will be done by the automatic burner sequence control).

5.3 Water supply

Open all domestic hot water taps supplied by the boiler, turn on the mains water supply to the boiler and open the mains water isolating valve below the boiler (2, fig. 31).

Water will now flow through the boiler to the hot taps. Starting with the lowest tap supplied, turn the hot taps off one at a time until the hot water pipework is purged of air.

Check all hot and cold pipework for leaks.

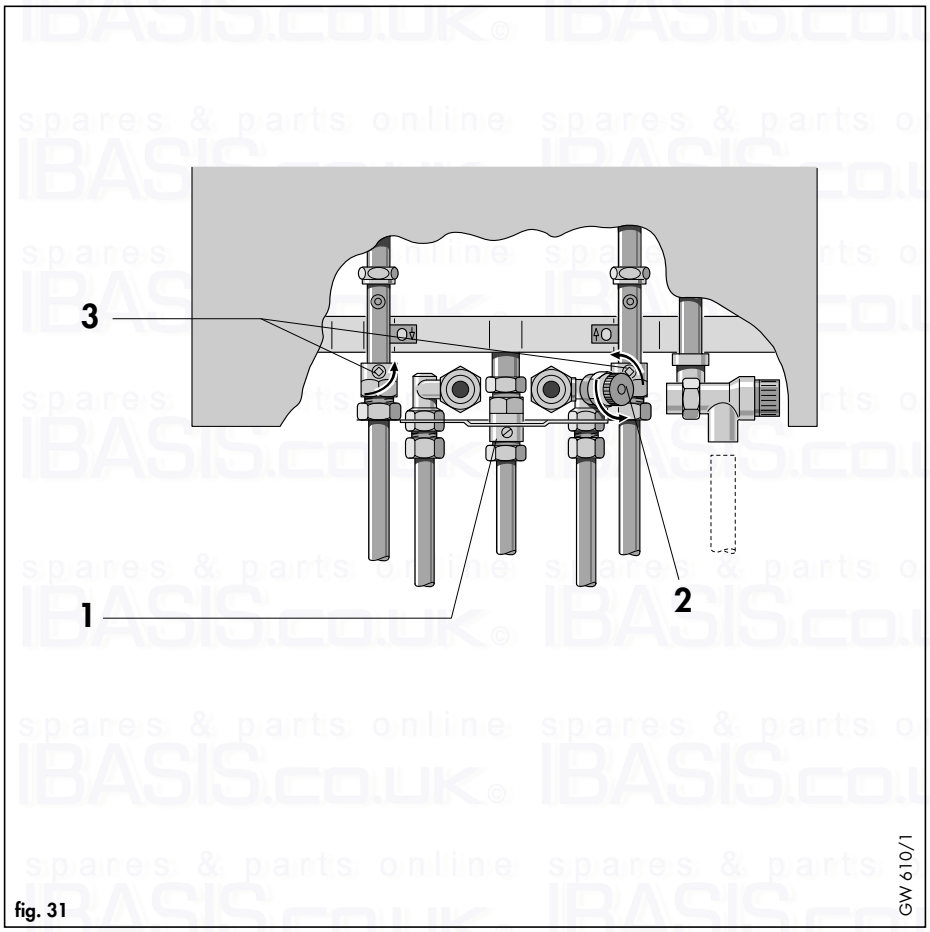

fig. 31

5.4 Filling the heating system

The boiler primary circuit and the heating system should be filled using a filling method as described in Section 3.7.2.

Ensure that the boiler CH service valves (3, fig. 31) are open.

Partially open the filling valve and allow water to enter the system. Starting with the lowest radiator, open the radiator air release until water (clear of bubbles) is emitted.

Repeat this at all radiators until the complete system is full, all air locks have been cleared and the boiler pressure gauge reads 1.5 Bar. Release any air from the pump by slackening the centre screw (1, fig. 32).

The boiler is equipped with an automatic air release valve. To allow this to vent the boiler, the cap on top (2, fig. 32) must be slackened by 1-2 turns. (This cap must be left slackened during boiler operation to ensure any residual air or system gases are released).

Check the heating system and boiler connections are sound.

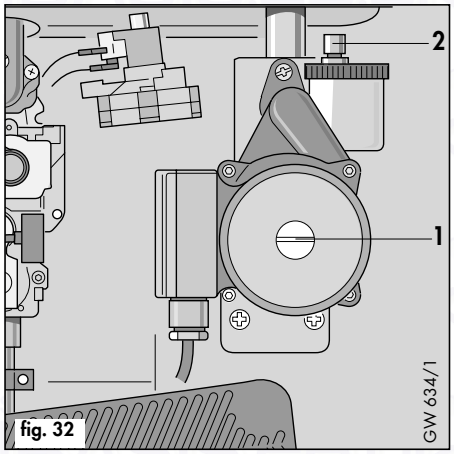

fig. 32

5.5 Initial system flush ('cold')

The whole of the heating system must be flushed out at least twice: once cold, and once hot as instructed later in Section 5.12.

Open all radiator or heating valves and boiler CH service valves (3, fig. 31) and drain the heating system and boiler completely from the lowest points of the system via 1/2in. BSP drain taps (opened full bore to remove any installation debris prior to lighting the boiler).

Refill the heating system as described in Section 5.4: Filling the heating system.

Check the operation of the pressure relief valve by rotating the knob on the valve.

5.6 Initial lighting

- Check that the boiler combustion chamber (5, fig. 33) is correctly fitted.
- Ensure the cold water shut-off valve (4, fig. 34) is open by turning anti-clockwise.
- Open the gas service valve (2, fig. 34)
- Check that the CH service valves (1 and 5, fig. 34) are open.
- Check that all external heating controls are calling for heat.
- Switch on the electricity supply to the boiler.
- Set both the maximum hot water temperature control (4, fig. 33) and maximum radiator temperature control (3, fig. 33) to '9'.
- Turn the boiler on/off control (1, fig. 33) to the "on" position (▮).
- Set the boiler central heating control (2, fig. 33) to the 'Heating and Hot Water' position (▥ ⚷).

The boiler will now operate for central heating. Allow the boiler to run for a few minutes to clear any air remaining in the primary circuit.

(If the boiler should fail to light after the 2nd ignition attempt the 'lock out' indicator will illuminate - see fig. 41. This usually means that the gas supply is turned off, or is not purged of air. Check gas supply, and turn the central heating control to the reset position - (🔥) - and repeat lighting procedure).

- Set the boiler central heating control to the 'Hot Water only' position (⚷). The boiler will now switch off.
- Reset the maximum radiator temperature control to the required setting according to Section 5.14.
- FULLY open a hot water tap. The boiler will now operate for hot water.

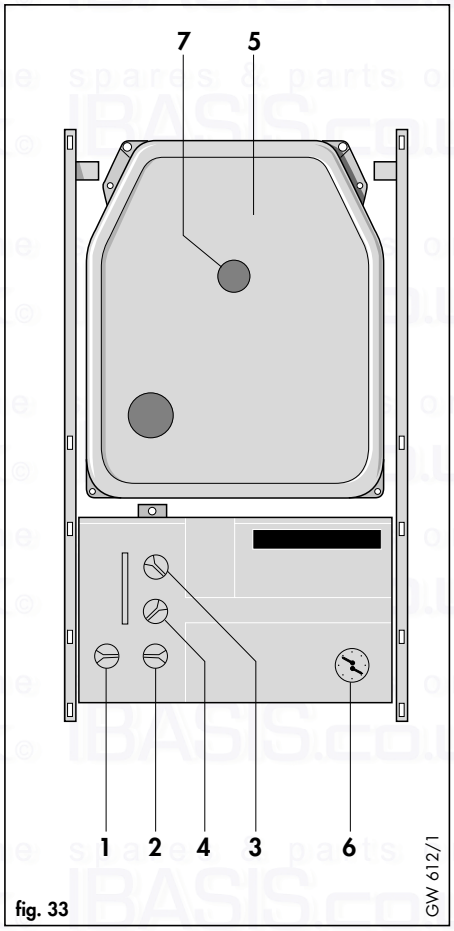

fig. 33

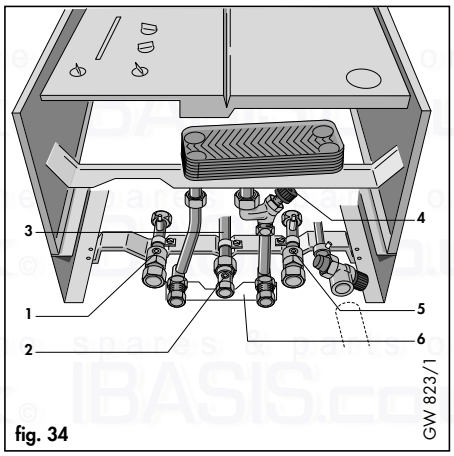

fig. 34

At this point the preset maximum domestic hot water flow rate can be adjusted if required.

Note: The water flow limiter built into the boiler ensures that the maximum domestic hot water flow rate does not exceed the nominal setting (equivalent to a hot water temperature rise of 35°C). Adjustment is only required if the user requires a higher temperature rise than this setting.

Turn the water flow adjusting screw (1, fig. 35) clockwise to decrease the flow from the tap until the temperature rise is at the desired level. Turn off the hot tap after completion of adjustment.

5.7 Gas inlet working pressure

Check the gas inlet working pressure by slackening the sealing screw and attaching a U gauge to the test point (3, fig. 36) on the inlet to the gas valve. Fire the boiler at full rate by opening a hot water tap. Check that the U gauge is reading 20 mbar.

(If the pressure is not 20mbar this should be investigated before continuing with the commissioning procedure. Lower pressures than 20mbar are indicative of an incorrectly sized or partially blocked gas supply).

Turn off the hot tap. Remove U gauge. Tighten the test point screw and test for soundness.

5.8 Main burner pressure

The burner pressure on this boiler has been factory set and does not require adjustment. The main burner pressure may be checked in the following way:

- Slacken the sealing screws and attach one arm of a U gauge to the burner test point (1, fig. 37). Remove plastic sealing plug and connect the other arm to the combustion chamber sensing tube (2, fig. 36).
- Ensure the maximum hot water temperature control (4, fig. 33) is set to '9'.
- Fully open a hot water tap to fire the boiler at full rate. Break the in line connector to the NTC temperature sensor (3, fig. 37).
- Check that the burner pressure is as shown in Table 4. (If the burner pressure is not correct within the tolerance shown, contact Vaillant Ltd. Technical Department).
- Turn off the hot tap.
- Remove U gauge. Tighten the sealing screw (1, fig. 36)and test for soundness. Reconnect NTC sensor (3, fig. 37). Refit plastic plug in chamber sensing tube.
- Reset the maximum hot water temperature selector to the required setting (see Section 5.14).
- Raise control box and secure in position using screw (1, fig. 25).

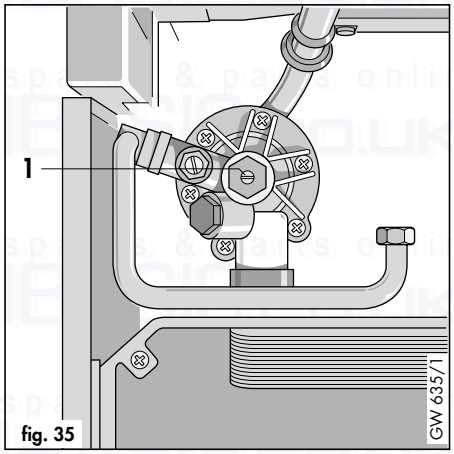

fig. 35

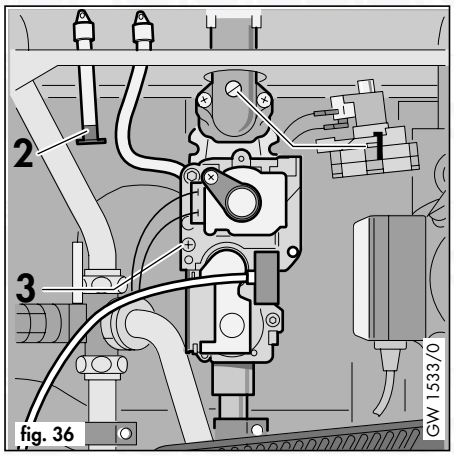

fig. 36

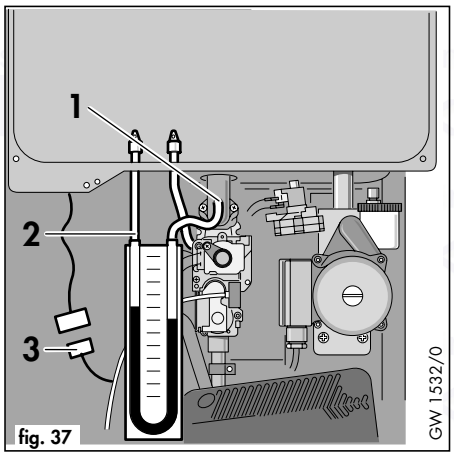

fig. 37

Table 4: Burner Pressure & Gas Rate

	VUW 242/1	VUW 282/1
Maximum Burner Pressure (DHW)	10.0 mb (±1.0 mb)	10.6 mb (±1.0 mb)
Maximum Gas Rate	2.79 m^3/h (98.5 ft^3/h)	3.26 m^3/h (115.1 ft^3/h)

5.9 Adjusting the central heating output (range rating)

The TURBOmax is fully modulating for central heating, and it is therefore not necessary to range rate the central heating. However, if desired, it is possible to range rate the boiler, as follows:

- Remove screw (1, fig. 38) and lower control panel.
- Slacken the sealing screw and attach one arm of a U gauge to the burner pressure test point (1, fig. 36). Remove plastic sealing plug and connect the other arm to the combustion chamber sensing tube (2, fig. 36).
- Remove screw (1, fig. 39) and remove terminal box cover to access the range rating potentiometer (1, fig. 40) beneath.
- Operate the central heating by turning the central heating control to the 'Heating and Hot Water' position ( ) ensuring that the external controls are calling for heat and the maximum radiator temperature control is set to 9.
- The central heating output can now be altered by inserting an electricians screwdriver into the potentiometer (1, fig. 40)
- Turn the potentiometer fully anticlockwise to the stop.
- Slowly turn the potentiometer clockwise, whilst observing the U gauge.
- Stop turning the potentiometer when the burner pressure is at the correct setting for the output required (see table 5).
- Turn the boiler off.
- Remove U gauge. Tighten the sealing screw, (1, fig. 36) and test for soundness.
- Refit plastic plug in chamber sensing tube.
- After setting, refit cover screw (1, fig. 39) and re-secure control panel (1, fig. 38).

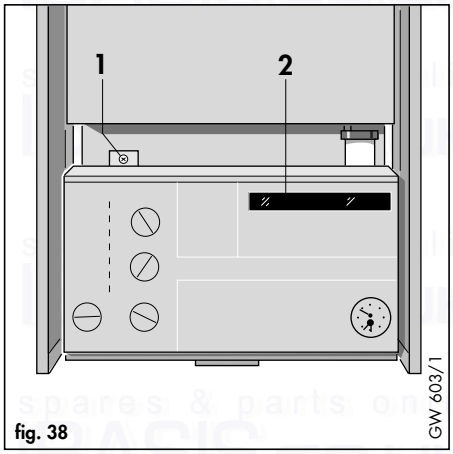

fig. 38

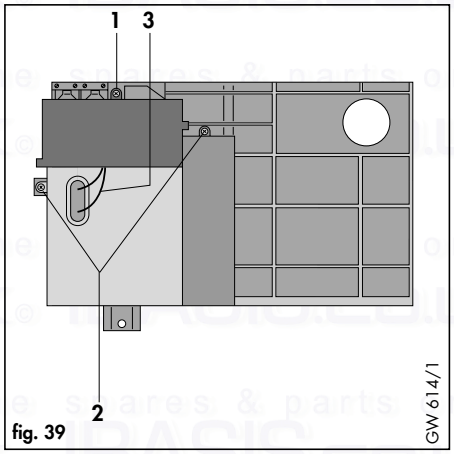

fig. 39

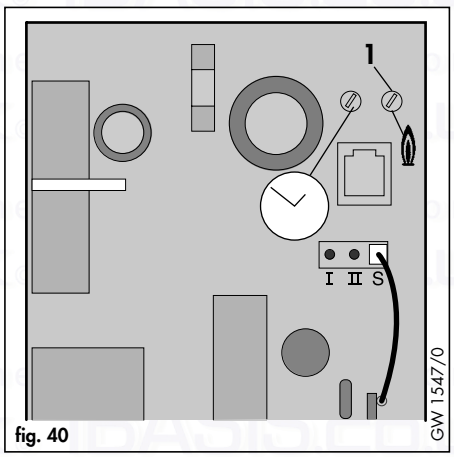

fig. 40

Table 5: Central Heating Output (Range Rating)

Output to central Heating mbar	Range rating mbar	
	VUW 242/1	VUW 282/1
28.0 (95,560)	-	10,6
24.0 (81,900)	10,0	8,0
21.0 (71,700)	8,0	6,3
18.0 (61,500)	6,1	4,8
15.0 (51,200)	4,5	3,4
12.0 (41,000)	3,1	2,2
min. 9,6 (32,800)	2,0	-
min. 11,2 (38,240)	-	2,0

5.10 Functional Checks

5.10.1 Introduction

The Vaillant TURBOmax is equipped with a set of diagnostic indicator lights to show the operational status of the boiler. A functional check of DHW and CH operation can be made using these indicator lights (fig. 41).

5.10.2 Functional check of domestic hot water

- Ensure that the power on indicator is illuminated.
- Set the boiler central heating control to the 'Hot Water only' position ( ).
- Turn on a hot tap and draw water at a high rate.
- The hot water demand indicator will illuminate.
- The appliance will start its lighting sequence. Once the fan and flue system has proved itself, the fan operation indicator will light.
- The gas valve will open and sparking will commence at the burner. The ignition indicator will illuminate.
- As soon as the burner has ignited and the flame has been sensed the flame indicator will illuminate.
- By illuminating in this sequence the indicator lights have demonstrated correct operation of the boiler for DHW.

5.10.3 Functional check of central heating

- Ensure that the power on indicator is illuminated.
- Set the boiler central heating control to the 'Central Heating and Hot Water' position ( ).
- Ensure external controls are calling for heat.
- The central heating demand indicator will illuminate.
- Providing the boiler has not achieved its set temperature, and the anti cycling control is not activated, the boiler will start its lighting sequence. Once the fan and flue system have proved their satisfactory operation the fan operation indicator will light.

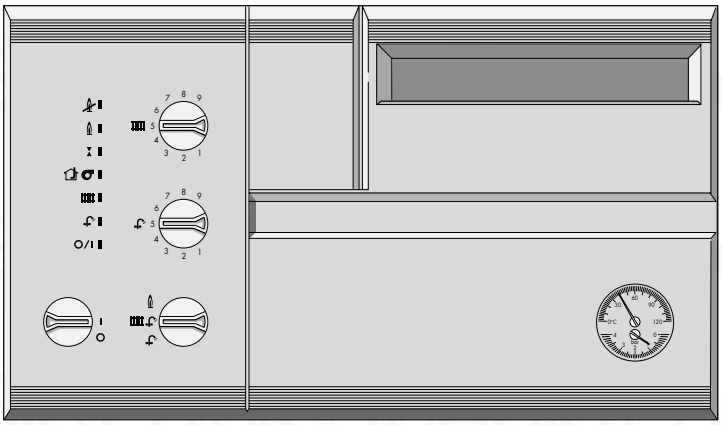

Burner lock out indicator
Flame indicator
Ignition indicator
Fan operation indicator
Central heating demand indicator
Hot water demand indicator
Power on indicator

GW 849/1

fig. 41

- The gas valve will open and sparking will commence at the burner. The ignition indicator will illuminate.
- As soon as the burner has ignited and the flame has been sensed the flame indicator will illuminate.
- By illuminating in this sequence the indicator lights have demonstrated correct operation of the boiler for CH.

Note : Should the boiler fail to light it will attempt re-ignition after an approximate delay of 10 seconds, if the boiler fails to light at the 2nd attempt the burner lock out indicator will illuminate. This usually means that the gas supply is turned off or has not been purged of air. Check the gas supply, turn the central heating control to the reset position ( ) and repeat the lighting procedure.

5.11 Checking flame supervision device

Operate the boiler and turn off the gas supply at the boiler gas service valve. The boiler should attempt to re-light (sparking at ignition electrode visible through viewing window) for approximately 9 seconds, if ignition does not occur the boiler will re-attempt ignition after a further 10 second delay before shutting down. The lock out indicator light will illuminate. Open the gas service valve and turn the central heating control (2, fig. 33) to the reset position ( ). The boiler should now re-light.

5.12 Final system flush ('hot')

Allow the boiler and system to reach maximum temperature and check that the heating system is watertight. Turn the boiler off and rapidly drain both boiler and system while still hot.

Refill the system and release all air as described in Section 5.4. Release water from the system until the system design pressure of 1.2 bar is attained.

(The actual reading on the pressure gauge - (6, fig. 33) - should ideally be 0.5 Bar plus an additional pressure corresponding to the highest point of the system above the base of the boiler - 10 m head equals an additional 1 Bar reading on the pressure gauge. The minimum pressure should not be less than 1 Bar in any installation).

If the system is to be treated with an inhibitor it should be applied at this stage. Sentinel X 100 is suitable for this purpose and it should be applied in accordance with the manufacturers instructions.

Further instructions can be obtained from Sentinel, Grace Dearborn Ltd, Tel: 0151 4951861.

Disconnect the temporary filling connection.

5.13 Fitting case

Attach top door panel by slotting side clips (1, fig. 42) into holes in side panel and sliding panel down to secure. Attach bottom door panel by locating onto top hinge pin (2, fig. 43) and inserting bottom hinge screw (1, fig. 43) so that it also locates into the door.

5.13.1 Door hinged at left hand side

If required the appliance lower door can be altered to hinge on the lefthand side.

Remove screws from bottom hinge pin (1, fig. 43) and transfer to left hand side panel.

Lift bottom of top hinge pin (2, fig. 43)away from casing to release retaining lug. Rotate top hinge through 90° to remove. Refit to left hand side casing.

Attach bottom door panel by locating onto top hinge pin (2, fig. 43) and inserting bottom hinge screw (1, fig. 43) so that it also locates into the door.

5.13.2 Fit bottom cover

Attach bottom cover to boiler by locating over front screws (2, fig. 51) and secure with rear screws (1, fig. 51).

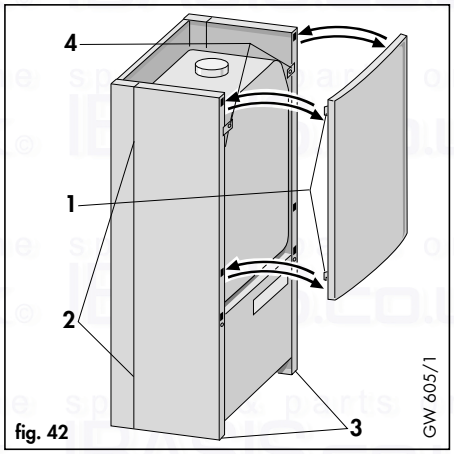

fig. 42

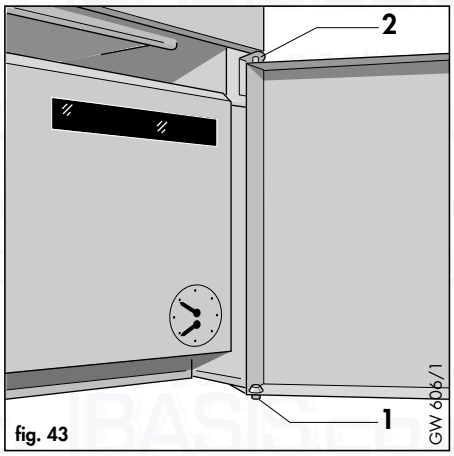

fig. 43

5.14 Hand over to user

Set the maximum radiator temperature control (3, fig. 44) to the desired setting.
The following settings may be used as a guide:

Spring and Autumn	5 – 6
Winter (normal)	6 – 7
Winter (severe)	7 – 9

Note: if the setting is too low the radiators may not reach the desired temperature.

Set the maximum hot water temperature control (4, fig. 44) to the desired setting. For normal circumstances the maximum hot water temperature should be set to 6.

Instruct the user in the safe and efficient operation of the boiler, in particular the function of:-

- the boiler on / off control
- the maximum radiator temperature control
- the maximum hot water temperature control
- the pressure gauge.

Show the user how to operate any external controls.

Explain to the user the importance of having the boiler regularly serviced by a competent servicing company. To ensure regular servicing, it is strongly recommended that arrangements are made for a Maintenance Agreement. Please contact Vaillant Service Solutions (0870 6060 777) for further details.

Leave the user instructions in the purpose provided pocket on the front of the control panel (2, fig 38).

Leave the installation and service instructions with the user.

6. Servicing

To ensure the continued safe and efficient operation of the boiler it is recommended that it is checked and serviced as necessary at regular intervals. The frequency of servicing will depend upon the particular installation conditions and usage, but in general once per year should be adequate. It is law that all servicing work is carried out by a competent person (CORGI registered).

IMPORTANT:

Before starting any maintenance work:

- Isolate the mains electricity supply by disconnecting the plug at the socket outlet (if there is an isolating switch only remove the fuse from the switch).
- Turn OFF the gas supply at the gas service valve fitted to the boiler.
- Always test for gas soundness and always carry out functional checks after any service work and after exchanging any gas carrying component.
- Always check earth continuity, polarity and resistance to earth with a multi-meter after any service work and after exchanging any electrical component.

Note: The boiler is fitted with a combustion analysis test point (7, fig. 44). A suitable combustion analyser can be connected to this point to establish the combustion performance of the boiler.

6.1 Initial Inspection

Before commencing any servicing or maintenance work, carry out an initial inspection of the system as follows:-

Inspect the flue, pipework and electrical connections for indications of damage or deterioration.

Inspect the air supply and ventilation arrangements of the installation, ensuring that the requirements of Section 3.5 are met.

Operate the boiler by turning the maximum hot water temperature control (4, fig. 44) to '9' and fully opening a hot water tap. Inspect the burner operation through the viewing window. Check that the flames are burning evenly over the full surface of the burner. Inspect for signs of excessive lifting or sooting.

Check the heating and hot water system, in particular the condition of the radiator valves, evidence of leakage from the heating system and dripping hot water taps.

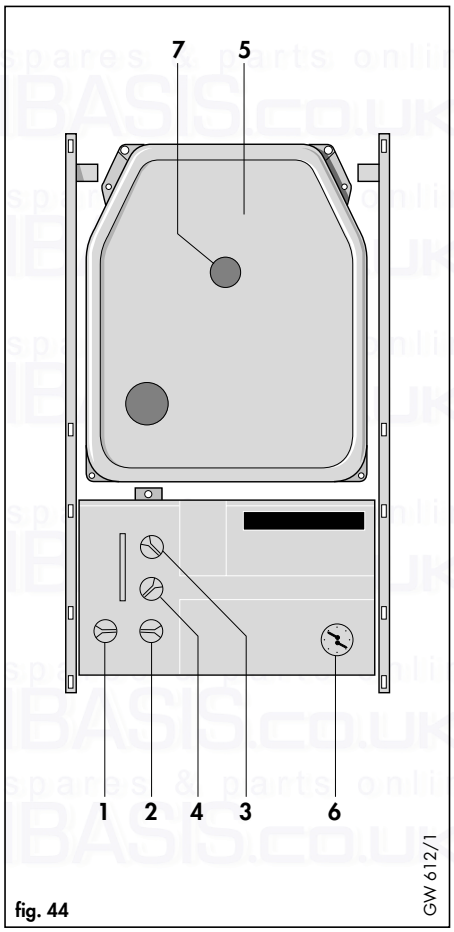

fig. 44

6.2 Routine maintenance

6.2.1 Remove front case

Remove bottom hinge screw (1, fig. 46) and pull lower door panel forward and down to release it from the top hinge pin (2, fig. 46).

Slide the top panel up to release retaining clips (1, fig. 47). Lift off top panel.

- Remove boiler bottom cover by undoing two screws (1, fig. 51) and slackening two screws (2, Fig. 51).

6.2.2 Turn off the boiler (fig. 45)

- Isolate the electrical supply to the boiler
- Turn off the gas service valve (2)
- Turn off boiler CH service valves (1 and 5)
- Turn off DHW cold water service valve (4).

6.2.3 Remove combustion chamber front cover (5, fig. 44)

Remove four screws (2, fig. 54) securing combustion chamber front cover

Lift combustion chamber clear of top retaining lugs and pull forward.

Remove combustion chamber cover by first bringing the left side forward to clear boiler casing.

6.2.4 Inspect main heat exchanger

Remove five screws securing heat exchanger front panel (1 and 3, fig. 48) and remove by gently pulling down and forward.

Inspect main heat exchanger and remove any deposits with a soft brush.

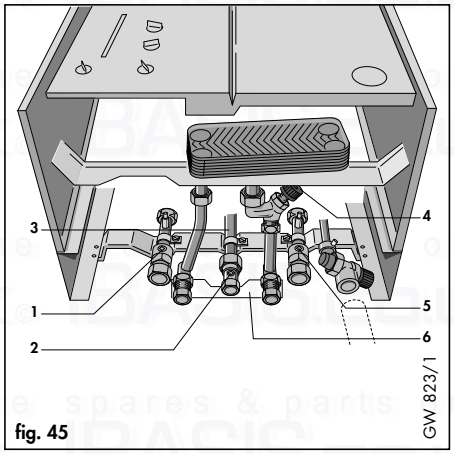

fig. 45

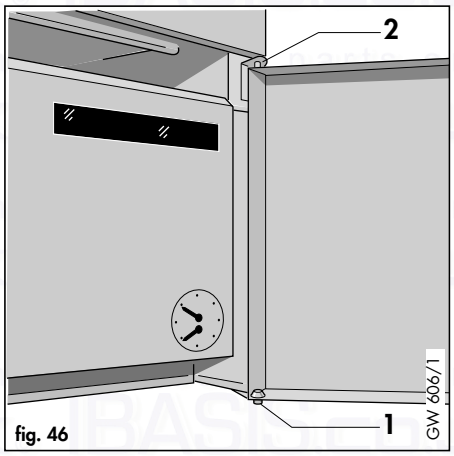

fig. 46

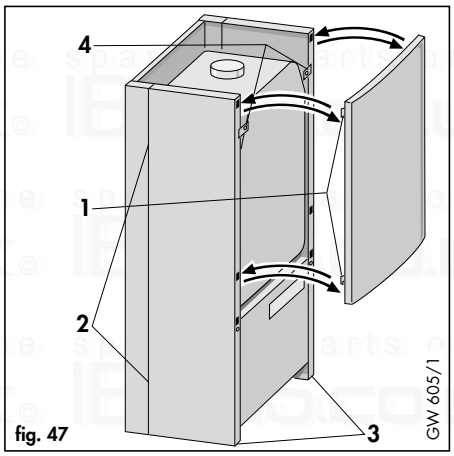

fig. 47

6.2.5 Inspect burner

With the combustion chamber front cover and heat exchanger front panel removed it is possible to inspect the burner. Any deposits should be removed with a soft brush. Check the condition of the ignition and monitoring electrodes.

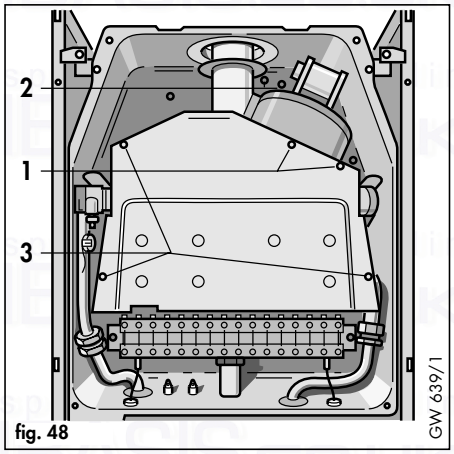

fig. 48

6.2.6. Check central heating expansion vessel

Note : It is not necessary to carry out this check every year - a check every three years should be sufficient.

Release the pressure from the boiler as described in section 7.1.2.

Remove valve cap from expansion vessel charge point (2, fig. 49).

Check that internal charge pressure of expansion vessel is between 0.7 - 0.9 Bar. If pressure is lower than this the vessel should be re-pressurised using an air pump.

Refit valve cap (2, fig. 49).

Open central heating service valves and re-pressurised the boiler and heating system if necessary (see section 5.4).

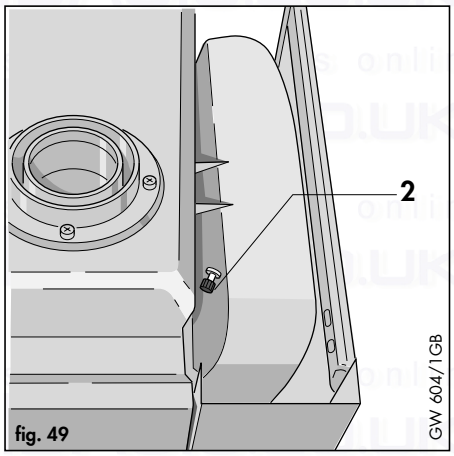

fig. 49

6.3 Re-commissioning the boiler

- Refit the heat exchanger front panel.
- Refit combustion chamber front cover ensuring that the seal is in good condition. Ensure that the cover is correctly fitted and a good seal is obtained.
- Turn on the gas and electricity supplies.
- Check soundness of internal gas connections.
- Carry out electrical safety checks (see section 5.1)
- Check water soundness
- Operate burner and check flame picture.
- Check for correct function of the boiler (see section 5.10).
- Check burner pressure as described in section 5.8 and boiler gas flow rate.
- Refit case (see Section 5.13)

7. Parts replacement

IMPORTANT:
Before starting any maintenance work:

- Isolate the mains electricity supply by disconnecting the plug at the socket outlet (if there is an isolating switch only, remove the fuse from the switch).
- When removing any water carrying components ensure that the control box cover and terminal box cover are in position and water is kept away from all electrical components.
- Turn OFF the gas supply at the gas service valve fitted to the boiler.
- Always test for gas soundness and always carry out functional checks after any service work and after exchanging any gas carrying component.
- Always check earth continuity, polarity and resistance to earth with a multimeter after any service work and after exchanging any electrical component.

7.1 Initial preparation

(These initial preparation procedures need only be carried out where specifically mentioned in the individual component replacement procedures).

7.1.1 Turning off the boiler (fig. 50)

- Isolate the electrical supply to the boiler
- Turn off the gas service valve (1)
- Turn off boiler CH service valves (2)
- Turn off DHW cold water service valve (3).

7.1.2 Releasing CH water pressure and draining the boiler (fig. 50)

- Isolate electrical supply to boiler.
- Remove combustion chamber cover as in section 7.1.5.
- Turn off boiler CH service valves (2).
- Attach a length of rubber tube to draining points (4), and drain the water from the boiler into a suitable container by undoing the drain points one turn.
- When pressure gauge reads zero, open main heat exchanger air vent (5, fig. 57) to allow complete draining of the boiler. Close air vent before refilling the boiler.

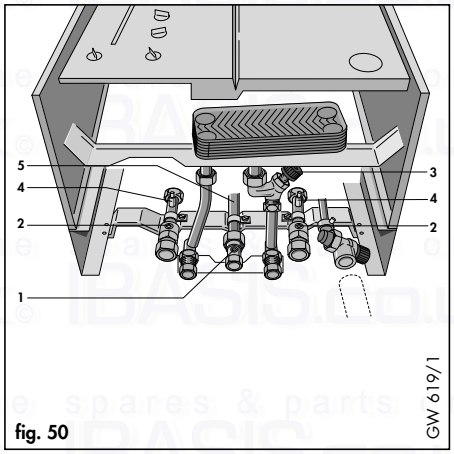

fig. 50

7.1.3 Removal of front casing

7.1.3.1 Door (fig. 52)

- Remove bottom hinge screw (1) and pull the bottom door panel forwards and down to release it from top hinge pin (2).

7.1.3.2 Top panel (fig. 53)

- Slide top panel upwards to release retaining clips (1).

7.1.3.3 Bottom cover plate (fig. 51)

- Remove two screws (1) and slacken two screws (2).
- Slide cover forwards and drop down to remove

7.1.3.4 Reassembly

- Reassemble in reverse order.

7.1.4 Removal of side casings

- Remove front casing as in section 7.1.3.
- Remove screws (3, fig. 53)
- Remove screws (4, fig. 53) and retaining brackets.
- Slide side case panel upwards to release retaining clips (2, fig. 53) and lift off.
- Reassemble in reverse order

7.1.5 Removal of combustion chamber cover (fig. 54).

- Remove front casing as in section 7.1.3,
- Remove four screws (2) securing combustion chamber front cover
- Lift combustion chamber cover clear of top retaining lugs and pull forward
- Remove combustion chamber cover by first bringing the left side forward to clear boiler casing.
- Check condition of case seal and if necessary replace before refitting
- Reassemble in reverse order, ensuring that the combustion chamber front cover is correctly fitted and a good seal obtained.

7.1.6 Lower front control panel (fig. 54)

- Remove front casing as in section 7.1.3,
- Undo screw (1) and lower control box forward from top.

7.1.7 Removal of heat exchanger front panel.

- Remove the five screws (1 and 3, fig. 47) securing the heat exchanger and remove the panel by gently pulling down and forward.

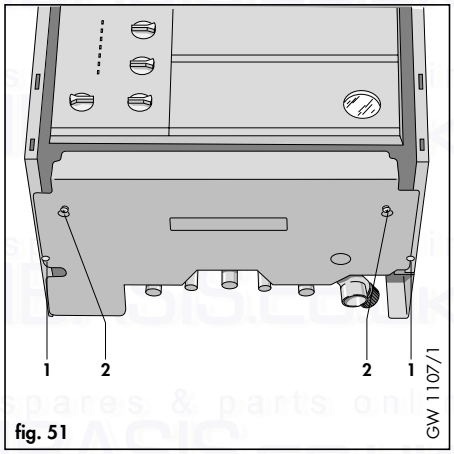

fig. 51

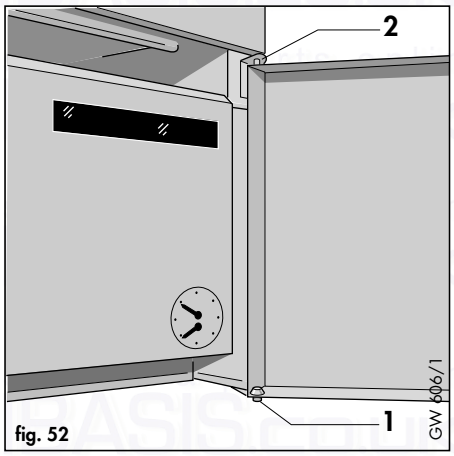

fig. 52

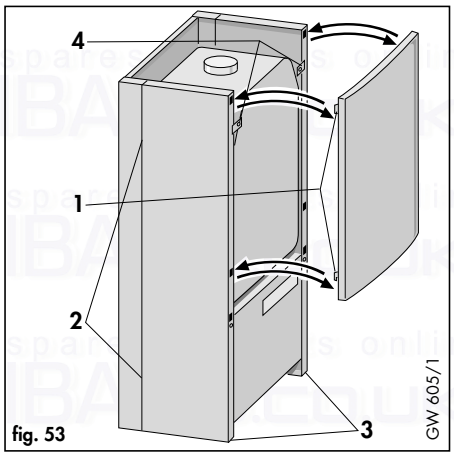

fig. 53

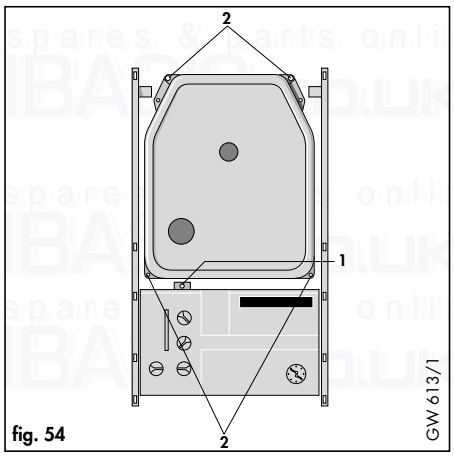

fig. 54

7.2 Replacement of fan (fig. 55)

- Isolate the boiler from the electrical supply.
- Remove front casing as in section 7.1.3, and remove combustion chamber cover as in section 7.1.5.
- Disconnect the electrical connections from the fan.
- Remove the 2 fan securing screws (4) and remove fan.
- Reassemble in reverse order.
- Re-fit combustion chamber and front casing.
- Carry out electrical checks (see section 5.1).

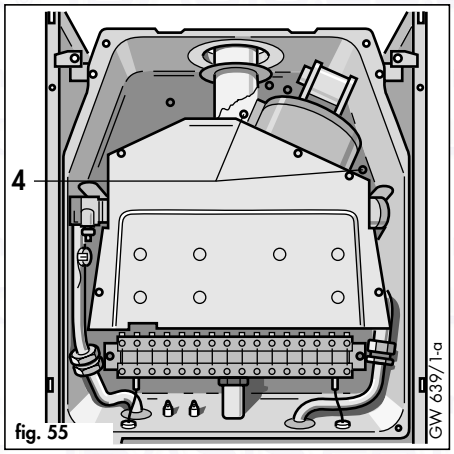

fig. 55

7.3 Replacement of air pressure switch (fig. 56)

- Isolate the boiler from the electrical supply.
- Remove front casing as in section 7.1.3.
- Disconnect electrical connections to pressure switch
- Remove screw (1) and lift out pressure switch.
- Disconnect air tubes (2) from switch.
- Reassemble in reverse order.
- Carry out electrical checks (see section 5.1).

Note: Air tubes should be reconnected
P1 to white tube.
P2 to blue tube.
(P1 and P2 are marked on air pressure switch).

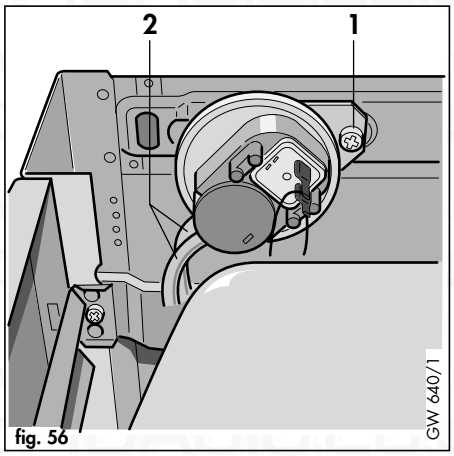

fig. 56

7.4 Replacement of burner

- Isolate the boiler from the electrical supply.
- Remove front casing as in section 7.1.3.
- Remove combustion chamber cover as in section 7.1.5
- Disconnect the ignition and flame sensing electrode leads (1, fig. 57).
- Remove two screws (2, fig 57) and pull burner forwards to remove.
- Reassemble in reverse order.
- Carry out electrical checks (see section 5.1) and check burner pressure (see section 5.8) and gas rate.

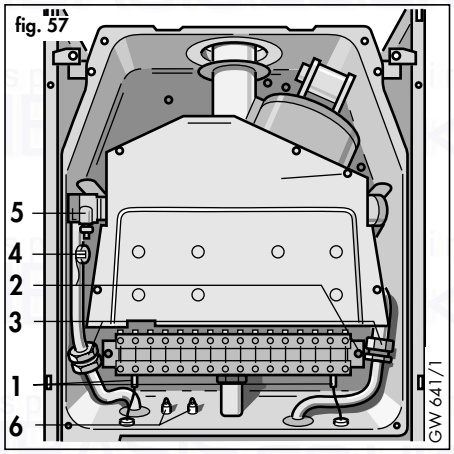

fig. 57

7.5 Replacement of electrodes

- Isolate the boiler from the electrical supply.
- Remove front casing as in section 7.1.3, and remove combustion chamber cover as in section 7.1.5
- Remove heat exchanger front panel as in section 7.1.7
- Pull off HT lead (ignition electrode) or sensing wire (flame sensing electrode) (1, fig 57)
- Depress spring retaining clip (1, fig 58) gently pull electrode up and clear of burner.
- To replace the electrode, depress spring retaining clip (1, fig 58) and insert electrode until the "V" locates in the cross support (2, fig 58)
- Carry out electrical checks (see section 5.1).

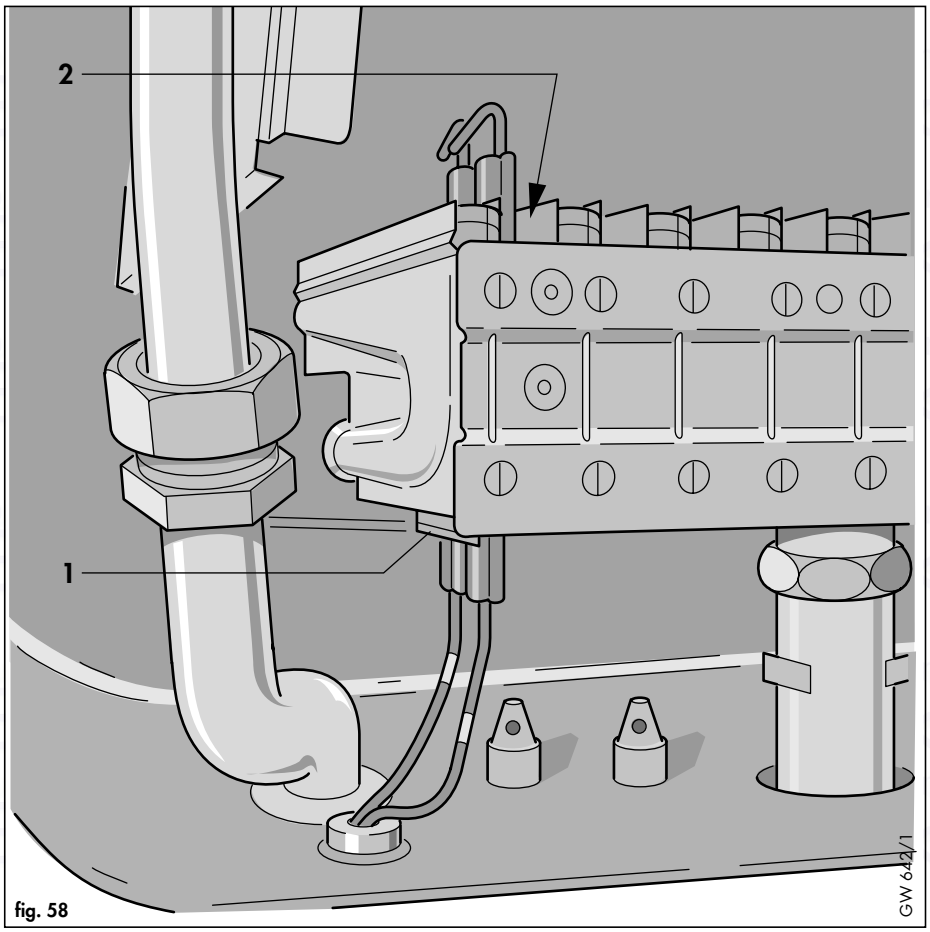

fig. 58

7.6 Replacement of NTC temperature sensor

Note: The NTC temperature sensor is an extremely reliable component and as such is unlikely to fail. Before changing the NTC please check that it is defective - see section 8 - fault finding.

- Disconnect boiler from electricity supply.
- Remove front casing as in section 7.1.3 and remove combustion chamber cover as in section 7.1.5
- Pull off connecting wire to sensor.
- Unscrew NTC sensor. (4, fig 62)
- Reassemble in reverse order.
- Carry out electrical checks (see section 5.1).

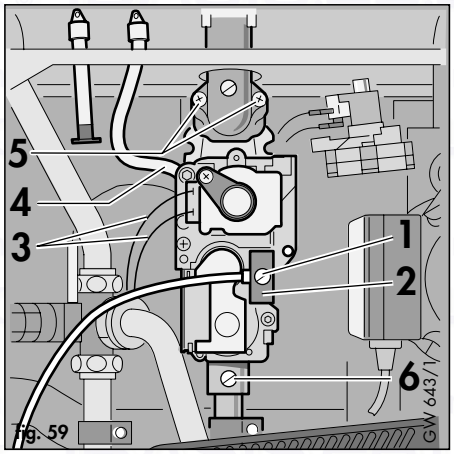

fig. 59

7.7 Replacement of gas valve

- Isolate the boiler from the electrical supply
- Remove the front casing as in section 7.1.3
- Lower front control panel as in section 7.1.6
- Turn off the gas service valve (1, fig. 50)
- Loosen screw (1, fig. 59) and pull off rectifier plug (2, fig. 59) from the gas operator.
- Pull off modulating coil wires (3, fig. 59).
- Disconnect air tube from gas operator (4, fig. 59).
- Remove two screws (5, fig. 59) at burner inlet connection.
- Remove screw (6, fig. 59) from gas valve inlet connection.
- Rotate gas valve to left and then lift to remove.
- Remove both inlet and outlet connections from the gas valve (1, fig. 60) by removing the eight securing screws (2, fig. 60) and refit to new gas valve using new seals provided.
- Reassemble in reverse order.
- Set burner pressure in accordance with instructions supplied with spare part.
- Carry out electrical checks (see section 5.1) and test all gas joints for soundness.

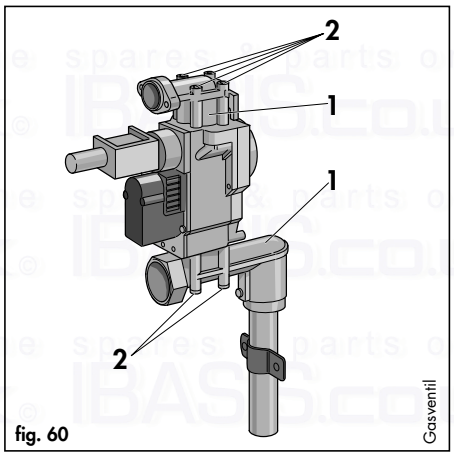

fig. 60

7.7.1 Replacement of modulating regulator

- Isolate the boiler from the electrical supply.
- Remove front casing as in section 7.1.3 .
- Lower front control panel as in section 7.1.6
- Turn off the gas service valve (1, fig. 50).
- Loosen screw (1, fig. 61) and pull off rectifier plug (2, fig. 61) from the gas operator.
- Pull off modulating coil wires (4, fig. 61).
- Remove modulating regulator by removing 2 screws (3, fig. 61) and pull regulator from gas valve body.
- Reassemble in reverse order.
- Set burner pressure in accordance with instructions supplied with spare parts.
- Carry out electrical checks (see section 5.1).and test all gas joints for soundness.

7.8 Replacement of main heat exchanger

- Turn off the boiler as in section 7.1.1.
- Remove front casing as in section 7.1.3 and remove combustion chamber cover as in section 7.1.5
- Remove heat exchanger front panel as in section 7.1.7
- Release CH water pressure and drain boiler as in section 7.1.2.
- Remove burner assembly as in section 7.4.
- Pull off wire from NTC (4, fig. 62)
- Disconnect flow and return connections (3, fig 62)
- Slide the heat exchanger forward to remove.
- Disconnect flow and return pipes from the heat exchanger by rotating at joints (bayonet fix)
- Reassemble in reverse order.
- Recommission boiler (see section 5).

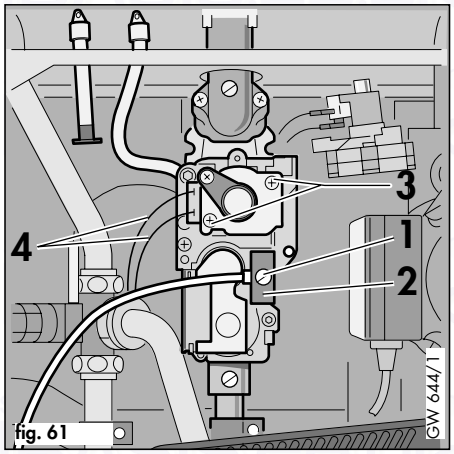

fig. 61

fig. 62

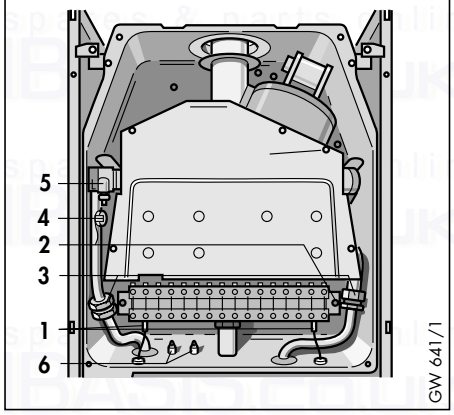

7.9 Replacement of CH expansion vessel

In the unlikely event of a failure of the CH expansion vessel follow procedure 7.9.1 or 7.9.2 depending upon the installation circumstances.

7.9.1. Boiler installed with air/flue duct to left/right hand side, or vertical flue installation (where 300mm vertical clearance exists above the boiler).

- Remove front casing as in section 7.1.3
- Turn off the boiler as in section 7.1.1.
- Release CH water pressure and drain boiler as in section 7.1.2.
- Remove combustion chamber cover as in section 7.1.5
- Remove 2 screws (2, fig 63).
- Remove screw (1, fig. 56) to release air pressure switch.
- Slide expansion vessel upwards and out of boiler casing.
- Replace in reverse order.
- Refill and repressurise the boiler (see section 5.4).

7.9.2 Boiler installed with air flue duct to the rear, or vertical flue installation (where less than 300mm vertical clearance exists above the boiler)

EITHER

Remove the boiler from the wall as follows:

- Remove front casing as in section 7.1.3
- Turn off the boiler as in section 7.1.1.
- Release CH water pressure and drain boiler as in section 7.1.2.
- Lower front control panel as in section 7.1.6
- Disconnect external wiring from boiler wiring terminal box.
- Disconnect flow and return connections at compression connection above boiler CH service valves (1, fig. 64).and remove two screws securing retaining lug to appliance chassis (2, fig. 64)
- Disconnect gas connection at compression joint on top of gas service valve (3, fig. 64).
- Disconnect domestic hot and cold water connections (4, fig. 64)
- Disconnect the flue from the top of boiler as described in section 4.6.
- Remove boiler from wall.
- Remove screw (1, fig. 56) to release air pressure switch.
- Remove two screws (2, fig. 63) and slide expansion vessel upwards and out of boiler casing.
- Reassemble in reverse order.
- Re-mount the boiler (see section 4.5 and 4.6).
- Re-commission the boiler (see section 5).

OR

A suitable replacement expansion vessel can be fitted externally to the boiler as described in Section 3.7.5 (if possible on the central heating return in an accessible position). In these circumstances, the replacement expansion vessel must be correctly sized ignoring the original expansion vessel which can be left in position on the boiler.

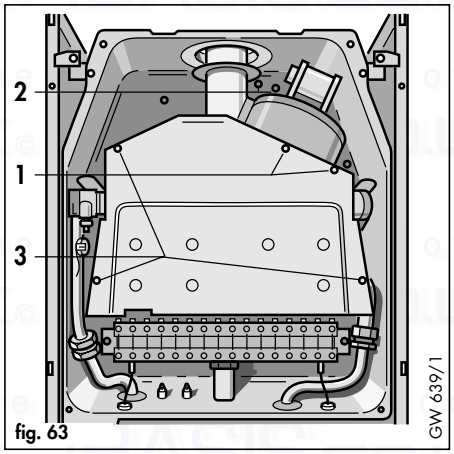

fig. 63

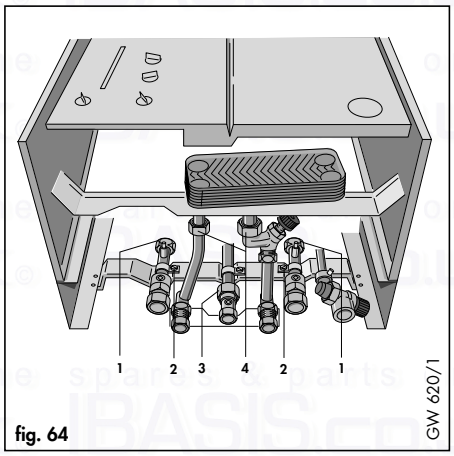

fig. 64

7.10 Replacement of transformer

- Isolate boiler from the electricity supply.
- Remove front casing as in section 7.1.3
- Lower front control panel as in section 7.1.6.
- Disconnect ignition leads (3, fig. 65) from rear of control box.
- Remove back of control box by undoing the 3 screws (1 and 2, fig. 65).
- Unplug transformer (A, fig 67) connecting lead from main switch board.
  Move clips (3, fig. 67) to the left and remove transformer from control box.
- Reassemble in reverse order.
- Carry out electrical checks (see section 5.1).

7.11 Replacement of overheat thermostat

- Isolate the boiler from the electricity supply.
- Remove front casing as in section 7.1.3.
- Lower front panel as in section 7.1.6.
- Pull wires off overheat thermostat (2, fig 66).
- Unscrew overheat thermostat to remove.
- Reassemble in reverse order.
- Carry out electrical checks (see section 5.1).

7.12 Replacement of pump

- Remove front casing as in section 7.1.3.
- Turn boiler off as in section 7.1.1.
- Release pressure and drain boiler as in section 7.1.2.
- Lower front control panel as in section 7.1.6.
- Disconnect ignition leads (3, fig. 65) from rear of control box.
- Remove back of control box by undoing the 3 screws (1 and 2, fig. 65).
- Unplug pump wire from main switchboard, and remove earth lead from earth strip.
- Undo the 3 pump screws (1, fig. 68).
- Pull pump forward to remove.
- Fit new '0' rings (supplied with pump) to pump connections.
- Re-assemble in reverse order.
- Carry out electrical checks (see section 5.1).

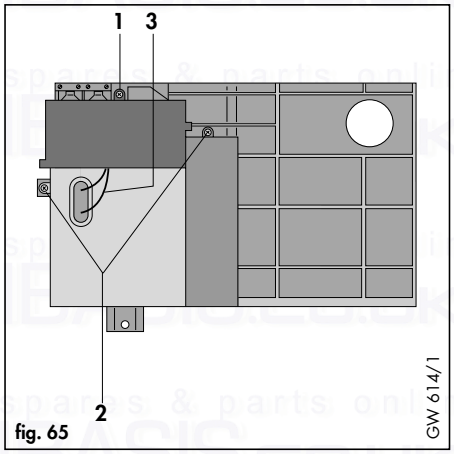

fig. 65

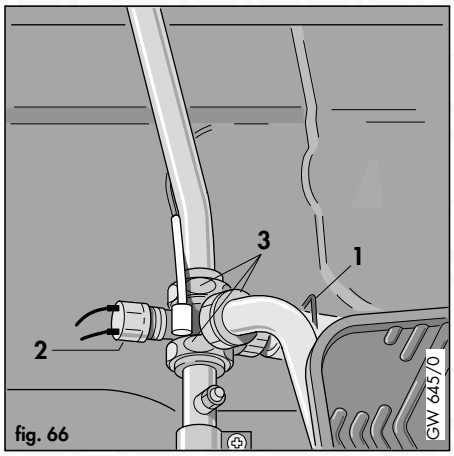

fig. 66

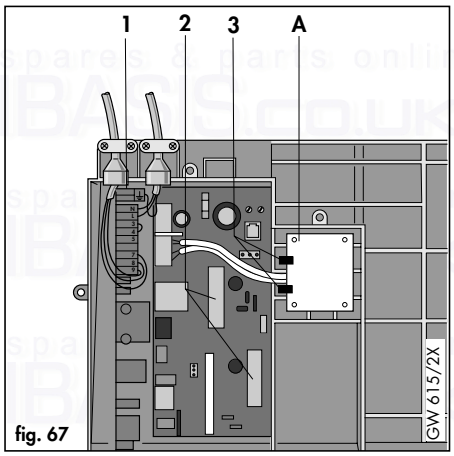

fig. 67

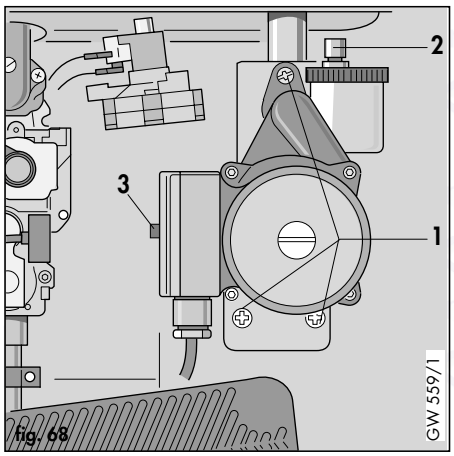

fig. 68

7.13 Replacement of automatic air release

- Turn off boiler as in section 7.1.1.
- Remove front casing as in section 7.1.3.
- Release CH water pressure and drain boiler as in section 7.1.2.
- Lower front control panel as in section 7.1.6.
- Unscrew cap (2, fig. 68) of auto air release and remove inner components.
- Replace with new inner components and reassemble in reverse order.
- Refill and repressurise the boiler (see section 5.4).

7.14 Replacement of automatic bypass

- Turn off boiler as in section 7.1.1.
- Remove front casing as in section 7.1.3.
- Release CH water pressure and drain boiler as in section 7.1.2.
- Lower front control panel as in section 7.1.6.
- Remove spring clip (1, fig. 66).
- Disconnect wires from overheat thermostat (2, fig. 66).
- Remove temperature gauge phial from primary flow pipe.
- Undo unions (3, fig. 66). Remove bypass/connecting pipe.
- Undo union (1, fig. 69) to remove bypass.
- Reassemble in reverse order using sealing washers supplied.
- Refill and repressurise the boiler (see section 5.4).

7.15 Replacement of diverter valve

- Turn off boiler as in section 7.1.1.
- Remove front casing as in section 7.1.3.
- Release CH water pressure and drain boiler as in section 7.1.2. Open hot water taps.
- Lower front control panel as in section 7.1.6.
- Remove pump as in 7.12
- Remove three screws (1, fig. 70) and pump support bracket (2, fig. 70).
- Remove clip and disconnect pressure tube (1, fig. 71) from diverter valve.
- Undo nut (2, fig. 71) and disconnect pressure guage tube.
- Disconnect union (6, fig. 71).
- Disconnect electrical connections from DHW microswitch (3, fig 71).
- Remove clip (4, fig. 71) by pulling down.
- Undo two unions (5, fig. 71).
- Undo union (3, fig. 72).
- Carefully pull diverter valve and cold water inlet pipe away from DHW heat exchanger Lift valve and cold water inlet pipe (1, fig. 72) out of boiler.
- Reassemble in reverse order.
- Carry out electrical checks (see section 5.1).
- Refill and repressurise the boiler (see section 5.4).

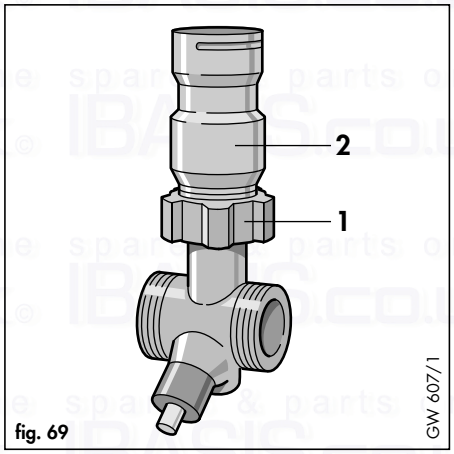

fig. 69

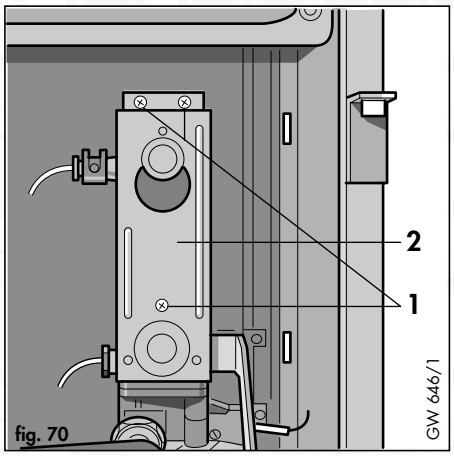

fig. 70

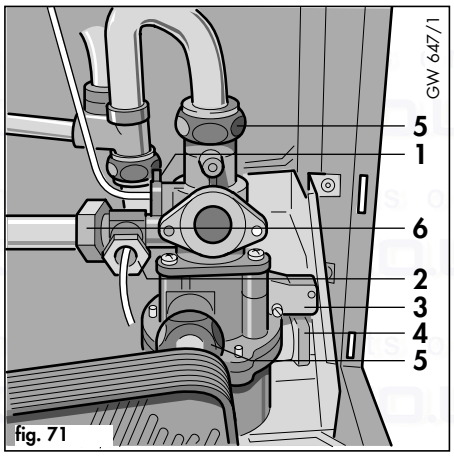

fig. 71

7.15.1 Replacement of water section diaphragm (fig. 72).

- Turn off boiler as in Section 7.1.1.
- Remove bottom cover as in section 7.1.3.3.
- Open hot water taps.
- Remove clip (2), undo union (3)
- Remove 6 screws (4).
- Pull water section base away from DHW heat exchanger and drop down.
- Remove diaphragm.
- Replace in reverse order.
- Carry out electrical checks (see section 5.1).
- Refill and repressurise the boiler (see section 5.4).

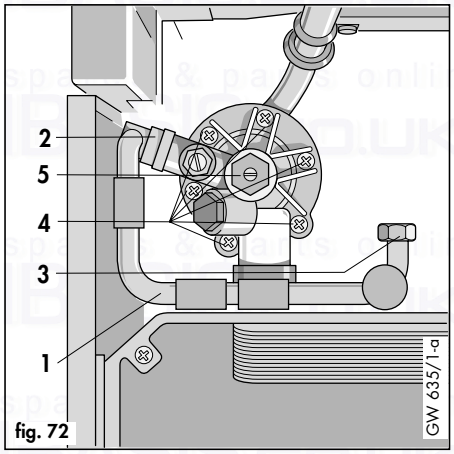

fig. 72

7.16 Replacement of pressure and temperature gauge

- Turn off boiler as in section 7.1.1.
- Remove front casing as in section 7.1.3.
- Release CH water pressure and drain boiler as in section 7.1.2.
- Lower front control panel as in section 7.1.6.
- Undo union (2, fig 71) on diverter valve to release pressure gauge tube.
- Remove temperature gauge phial from pocket on primary flow pipe.
- Press spring clips on side of gauge to remove from front panel.
- Replace in reverse order.
- Refill and repressurise the boiler (see section 5.4).

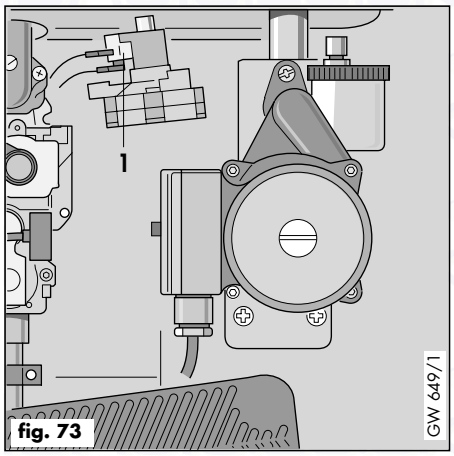

fig. 73

7.17 Replacement of differential pressure switch

- Turn off boiler as in section 7.1.1.
- Remove front casing as in section 7.1.3.
- Release CH water pressure and drain boiler as in section 7.1.2.
- Lower front control panel as in section 7.1.6.
- Remove clip at rear of switch by pulling it to the left.
- Disconnect wires from switch (1, fig. 73).
- Pull pressure differential switch forward to remove.
- Reassemble in reverse order.
- Carry out electrical checks (see section 5.1).
- Refill and repressurise the boiler (see section 5.4).

7.18 Replacement of DHW microswitch.

- Isolate appliance from electricity supply.
- Remove front casing as in section 7.1.3.
- Lower front control panel as in section 7.1.6.
- Lift off microswitch retaining 'bow' spring,
- Pull microswitch forward to remove from mounting bracket and disconnect wires.
- Reassemble in reverse order.
- Carry out electrical checks (see section 5.1).

7.19 Replacement of DHW heat exchanger

- Turn off boiler as in section 7.1.1.
- Remove front casing as in section 7.1.3.
- Release CH water pressure and drain boiler as in section 7.1.2.
- Lower front control panel as in section 7.1.6.
- Unscrew the top two unions (1, fig. 74), bottom left hand union and backnut (2, fig. 74)

  Note: The connection between the DHW heat exchanger and water section is a push fit joint.
- Pull heat exchanger forward to remove.
- Reassemble in reverse order using new sealing rings supplied.
- Refill and repressurise the boiler (see Section 5.4).

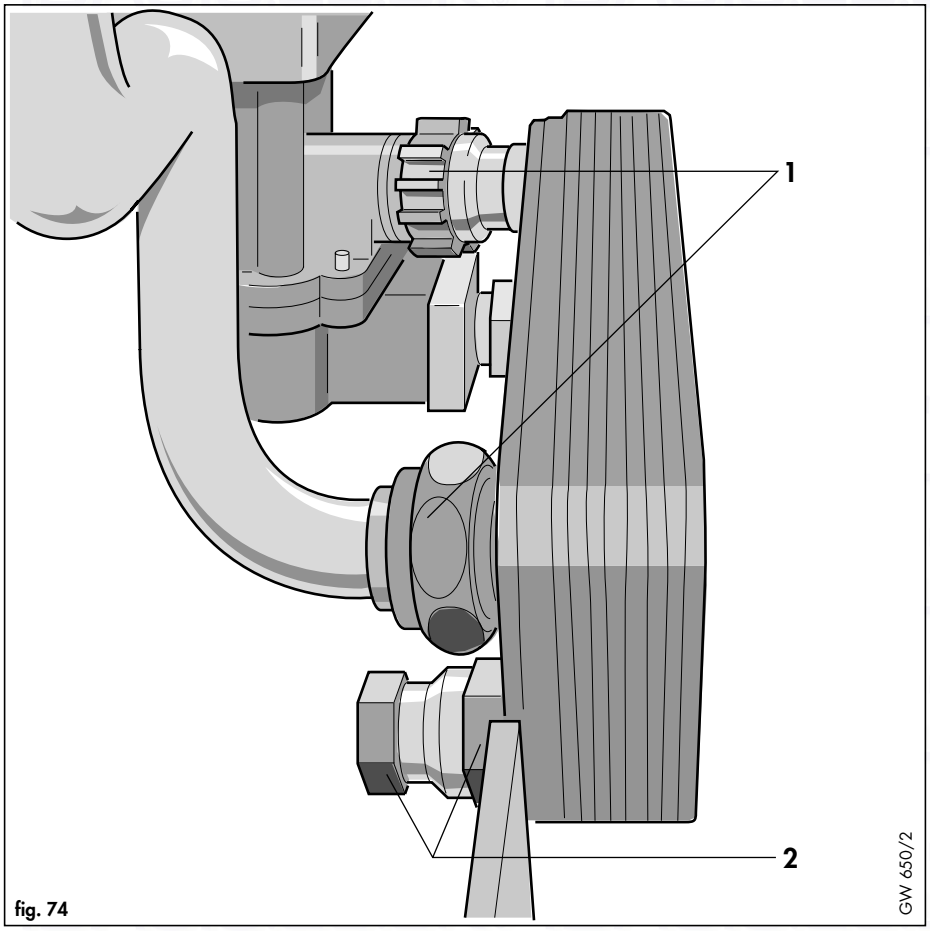

fig. 74

7.20 Removal of printed circuit boards (PCBs)

Before commencing work on PCB replacements carry out the following:-

Diagnose that the boards require changing using the fault finding guide (see section 8: Fault finding).

- Turn off the boiler as in section 7.1.1.
- Remove front casing as in section 7.1.3.
- Lower front control panel as in section 7.1.6.
- Remove back of control box by undoing the 3 screws (1 and 2, fig. 65).
- Disconnect ignition leads from rear of control box.

7.20.1 Replacement of switch and control boards

- Disconnect external wiring from boiler terminal strip.
- Unplug ribbon cable from control board (2, fig. 75).
- Unplug all leads from the both boards (1, fig. 75).
- Pull off switchboard board support.
- Pull switchboard carefully out of control box.
- Push four spring retaining clips (5, fig. 76) out, and gently lift control board out of control box.
- Reassemble in reverse order.

Note: When refitting the control board, ensure that the user control spindles (3, fig. 75) are aligned with the potentiometer and control switch holes (5, fig. 75) and that the locating rib of the potentiometer/switch correctly engages in the groove of the control knob spindle. Also ensure that when refitting the main switchboard the on/off control knob spindle (3, fig. 75) engages correctly into the on/off switch (5, fig. 75) mounted on the board.

- Carry out electrical checks (see section 5.1)

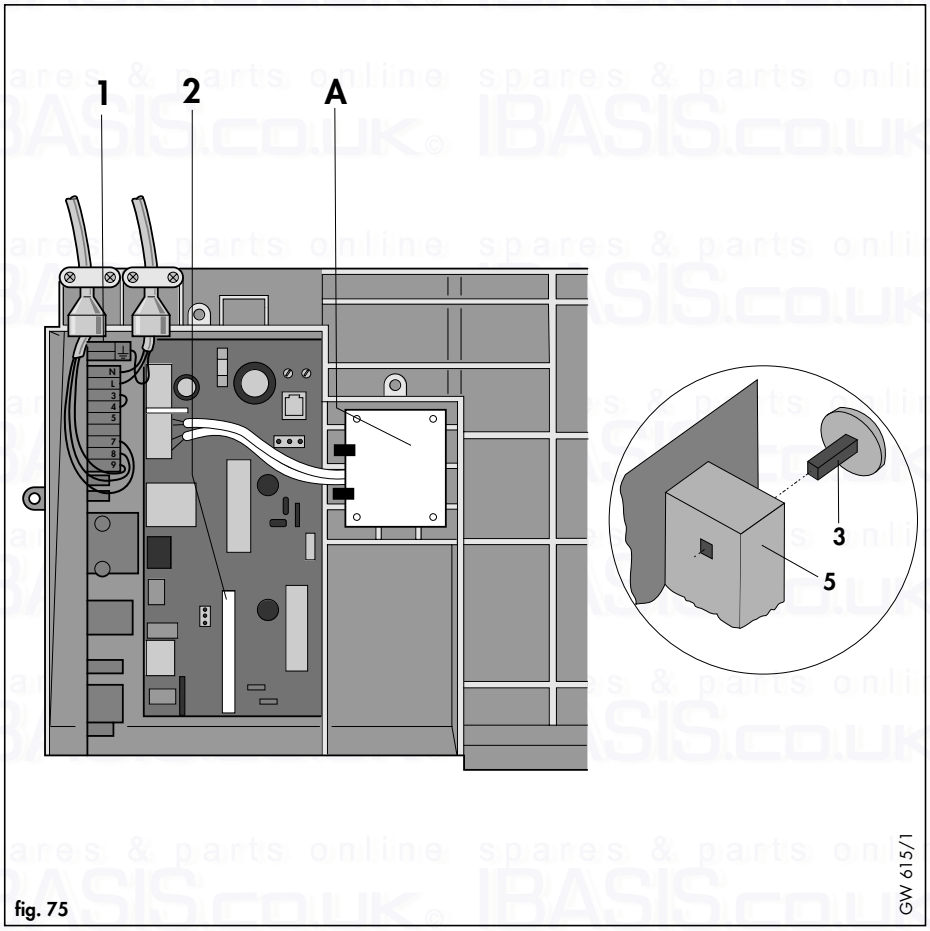

fig. 75

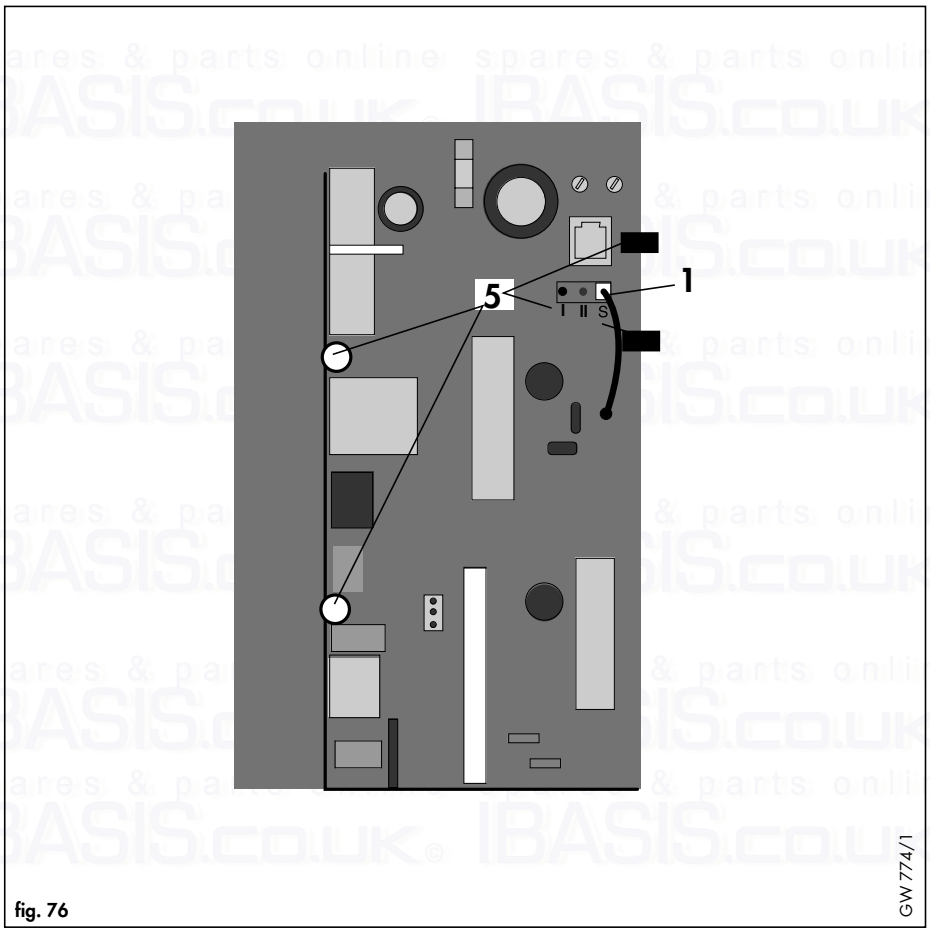

fig. 76

8. Fault finding

8.1 Introduction

The TURBOmax has built in diagnostic indicator lights (fig. 77) to assist you with fault finding in the unlikely event of a boiler malfunction. The lights will illuminate in sequence, indicating the operational status of the boiler. Should a fault develop in the boiler the indicators may flash highlighting the possible fault e.g.

Power on indicator (green) O/I
Illuminates when the electricity supply to the boiler is on, the main on/off control is set to position (I) and the internal boiler fuses are o.k.
(A flashing indicator shows that the overheat thermostat has cut out.)

Hot water demand indicator (yellow)
Illuminates whenever there is a demand for hot water i.e. a hot water tap is opened.

Central heating demand indicator (yellow)
Illuminates whenever there is a demand for central heating i.e. the central heating control is set to position ( ) and the external heating controls are calling for heat.

Note: If the external controls are not calling for heat (i.e. the room thermostat has reached temperature) this indicator will go out. This is perfectly normal.

Fan operation indicator (yellow)
Illuminates to indicate that the fan is operating and has been checked by the fan pressure switch.
(A flashing indicator shows that the air pressure switch has not made.)

Ignition indicator (yellow)
Illuminates when gas valve, operator and ignition transformer are energised. This indicator remains on during burner operation.
(A flashing indicator shows lack of water or poor water circulation in central heating system.)

Flame indicator (yellow)
Illuminates when flame is recognised by the flame monitoring system.
(A flashing indicator shows that the NTC sensor is broken, not connected or shorted to earth.)

Burner lockout indicator (red)
Illuminates if the burner fails to light within 9 seconds of illumination of the ignition indicator after the 2nd ignition cycle.
(A flashing indicator shows a failure in the electronic boards.)
To reset the appliance after a lockout (either burner lockout illuminated or any other indicator light flashing), turn the central heating control to the reset position ( ) and release.

8.2 Logical fault finding procedure

8.2.1 Preliminary Checks

These checks must be carried out before attempting to use the fault finding guide:-

1) Carry out electrical safety checks (see Section 5.1: Preliminary electrical checks).
2) Check that the external electricity supply to the boiler is on, and a supply of 230 V~ is present between boiler terminals 'L' and 'N'.
3) Check that gas supply to the boiler is on and that it has been correctly purged (see Section 5.2: Gas Supply).
4) Ensure the heating system is full of water and charged to approx. 1 bar. If not refill the system and vent (see section 5.4: Filling the heating system). Ensure boiler flow and return service valves are open.
5) Check that boiler main on/off control is set to position (I)
6) Set boiler central heating control to Heating and Hot Water position ( )
7) Ensure that the Maximum Radiator Temperature and Maximum Hot Water Temperature controls are set to position '9'.
8) Check that all the external controls are on and calling for heat (if no external controls are fitted, boiler terminals 3 and 4 must be linked). Check that boiler anti-cycling 'economiser' control is not engaged (see Section 4.8.5).

8.2.2 Procedure

Note: Always check the operation of the boiler for central heating first before checking hot water operation. Do not open a hot tap unless instructed to by the fault finding guide.

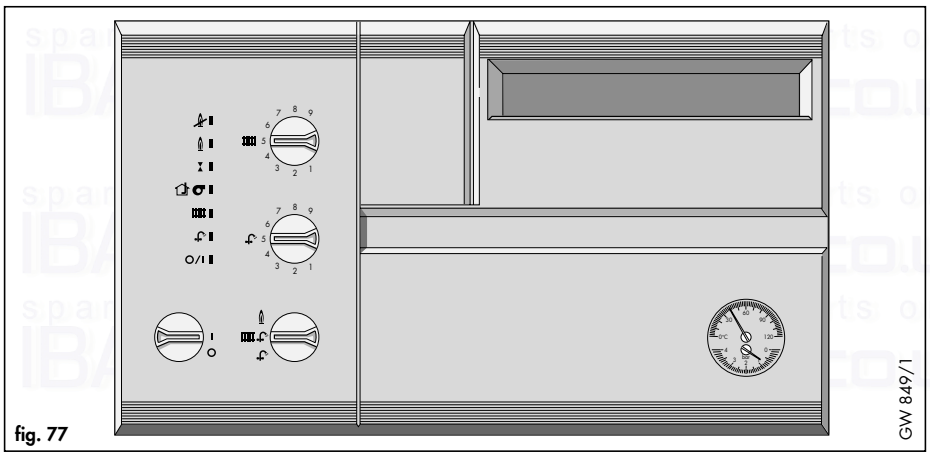

fig. 77

Sheet A **Check electrical supply and appliance fuses**

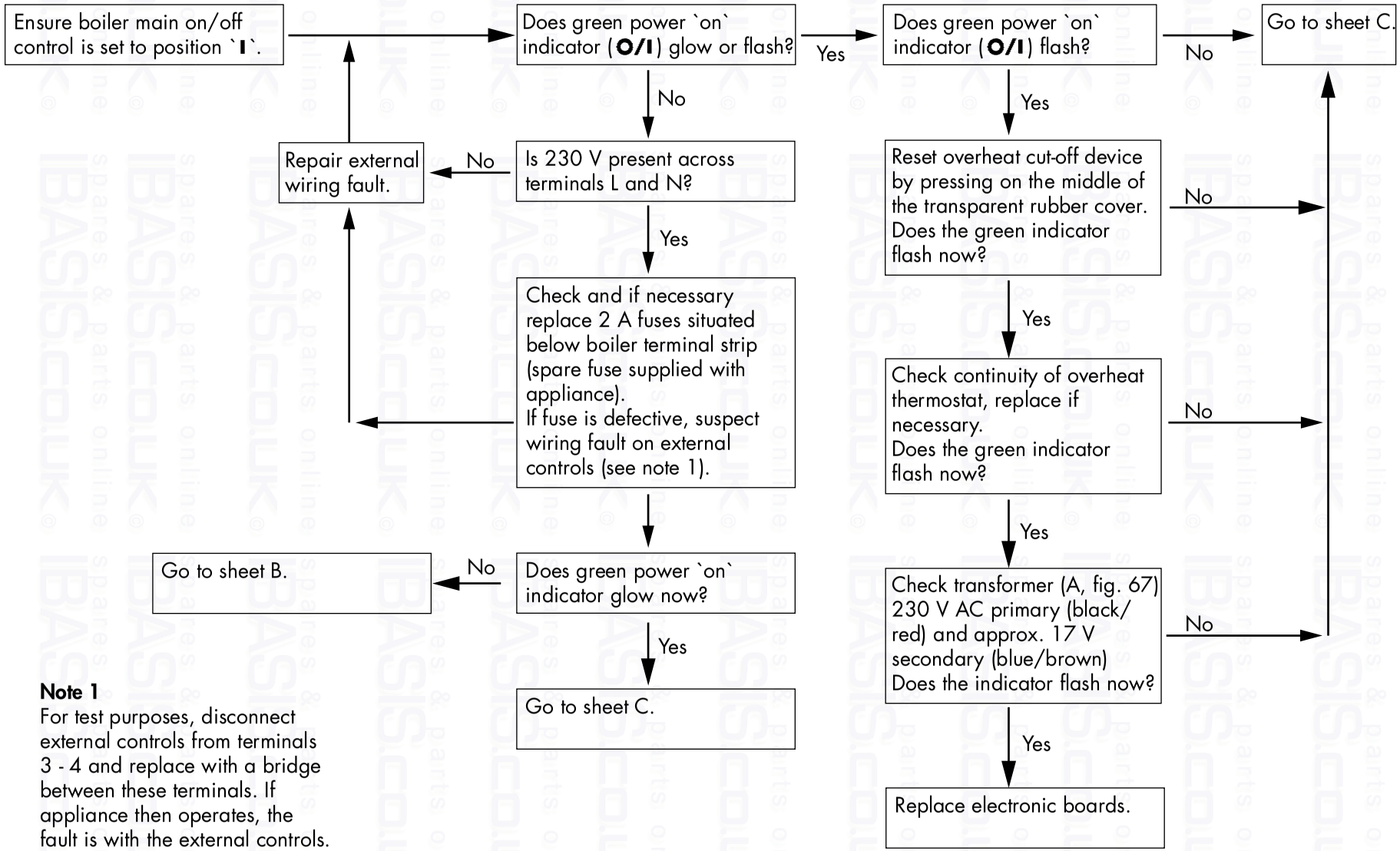

Note 1
For test purposes, disconnect external controls from terminals 3 - 4 and replace with a bridge between these terminals. If appliance then operates, the fault is with the external controls.

Sheet B

Check main on/off control, overheat thermostat and anti-surge fuse

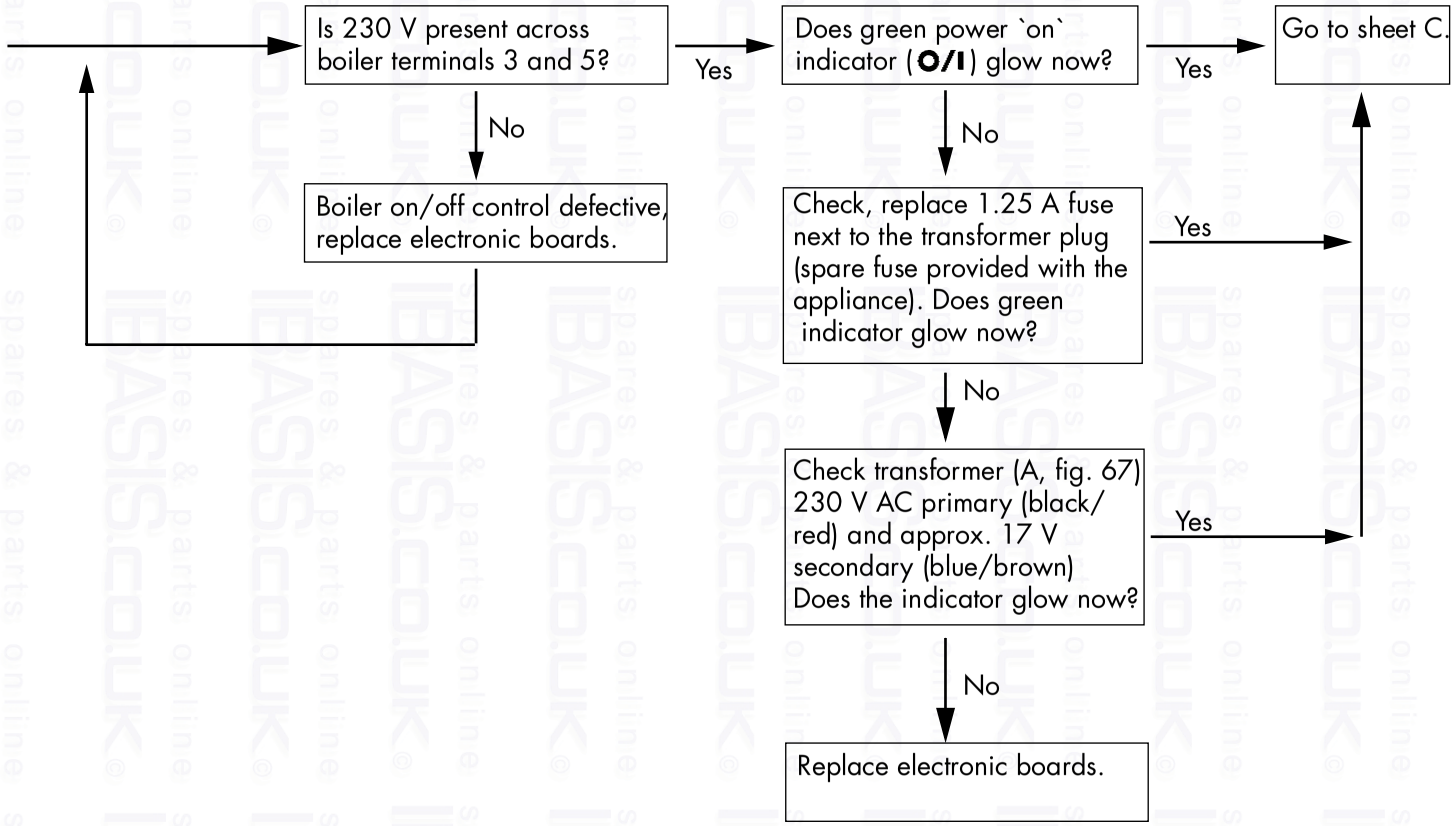

Sheet C

Check Central Heating control and external controls

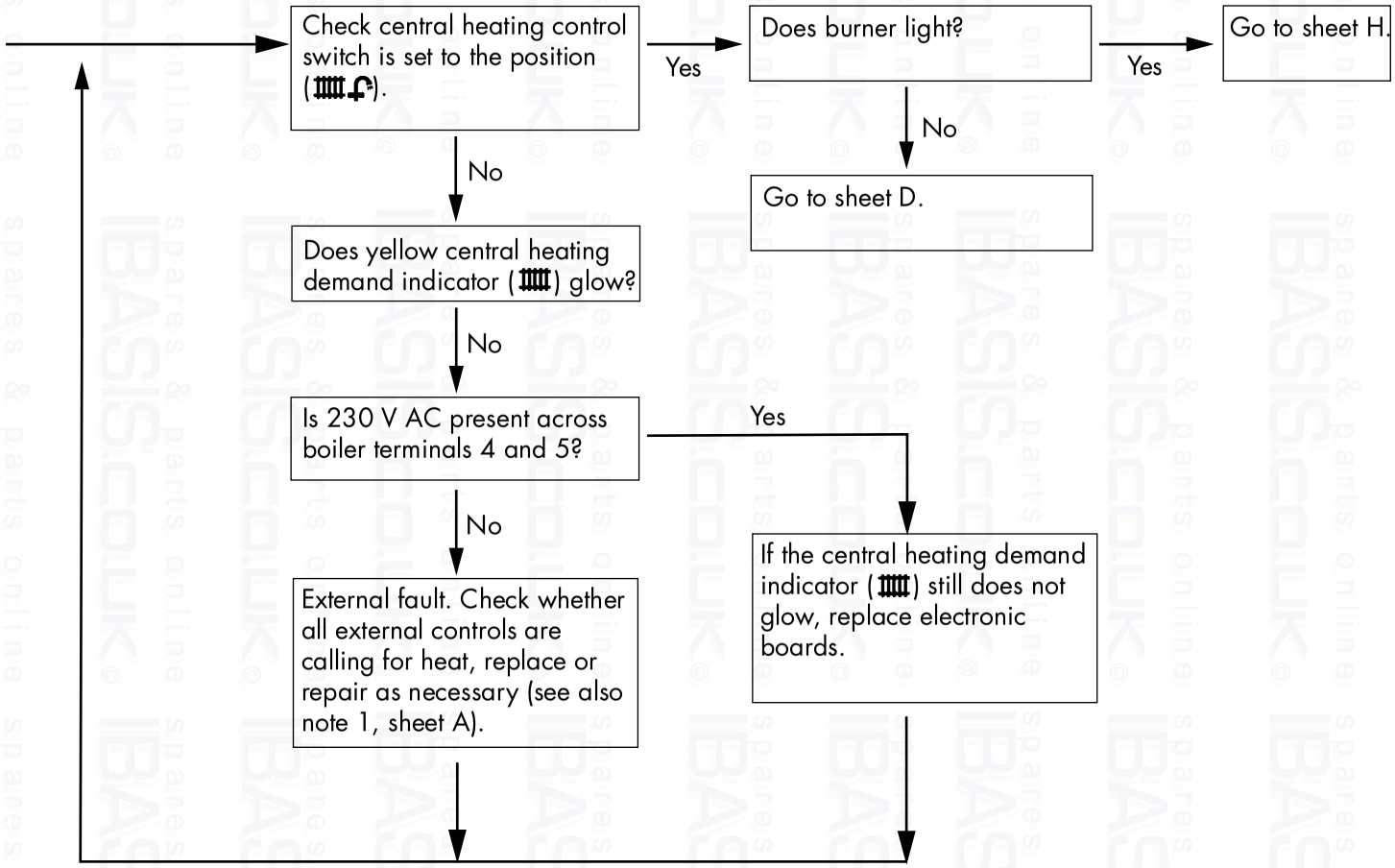

Sheet D

Check operation of pump

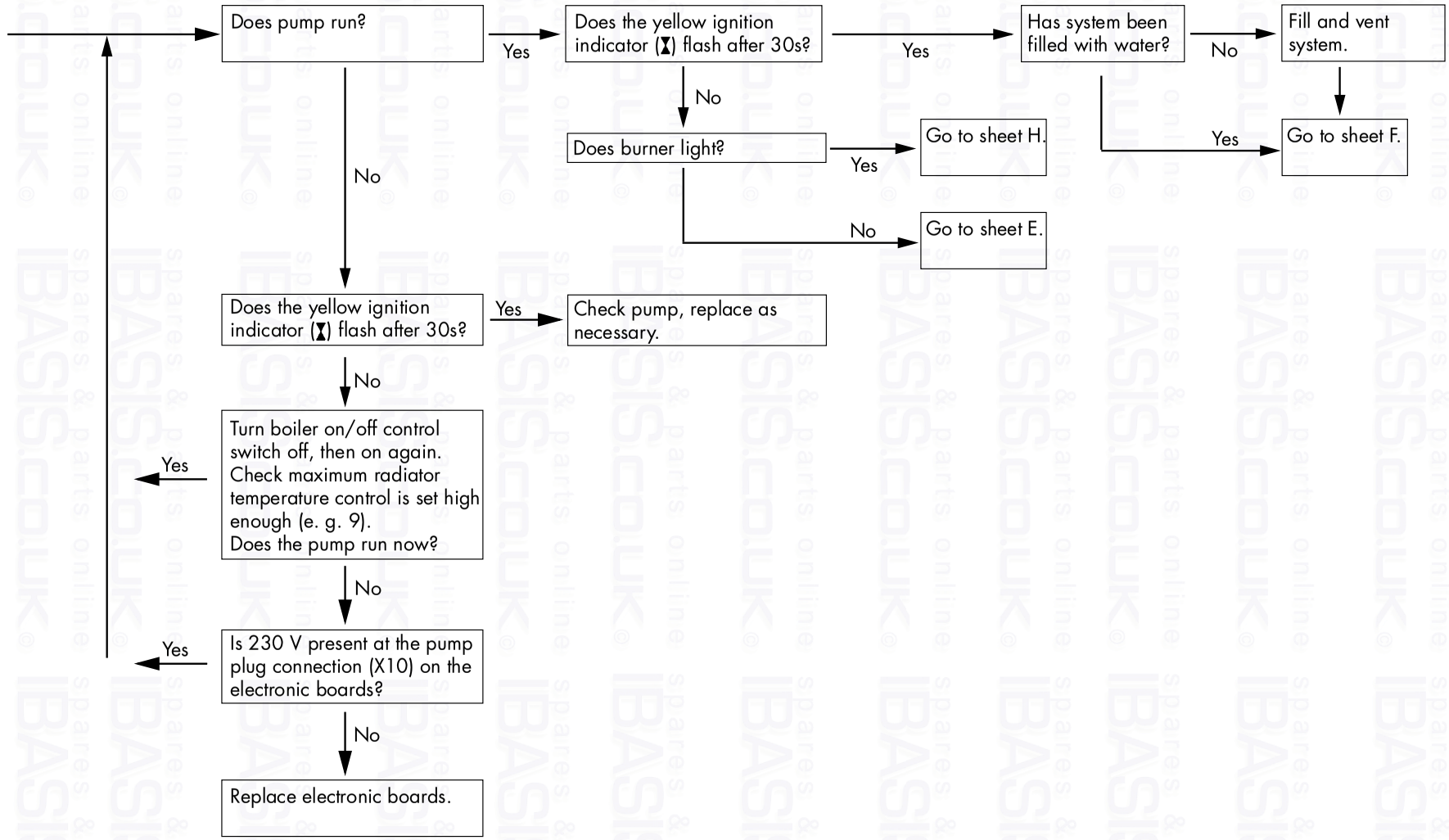

Sheet E **Check fan/flue gas system**

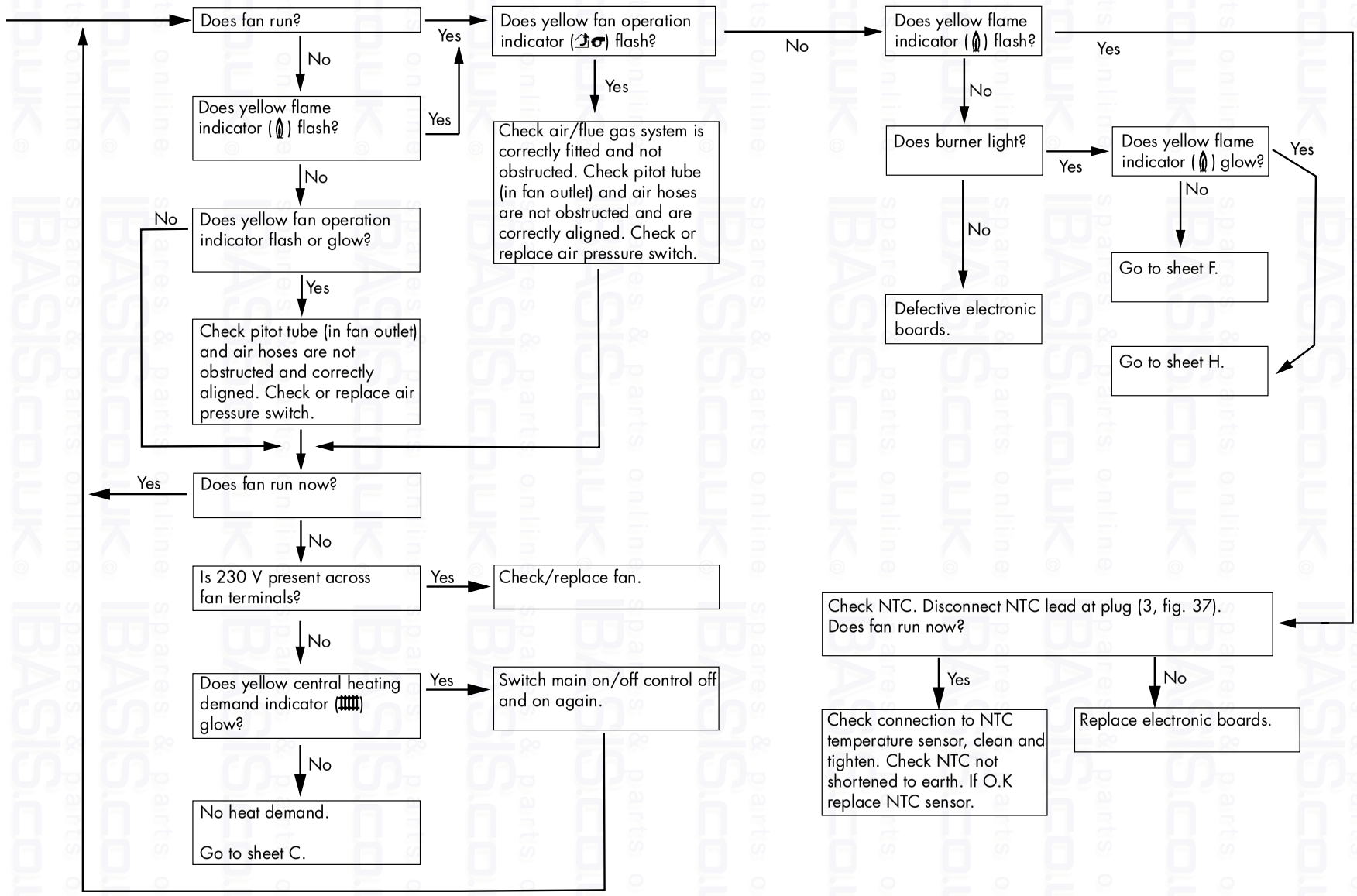

Sheet F

Check operation of differential pressure switch

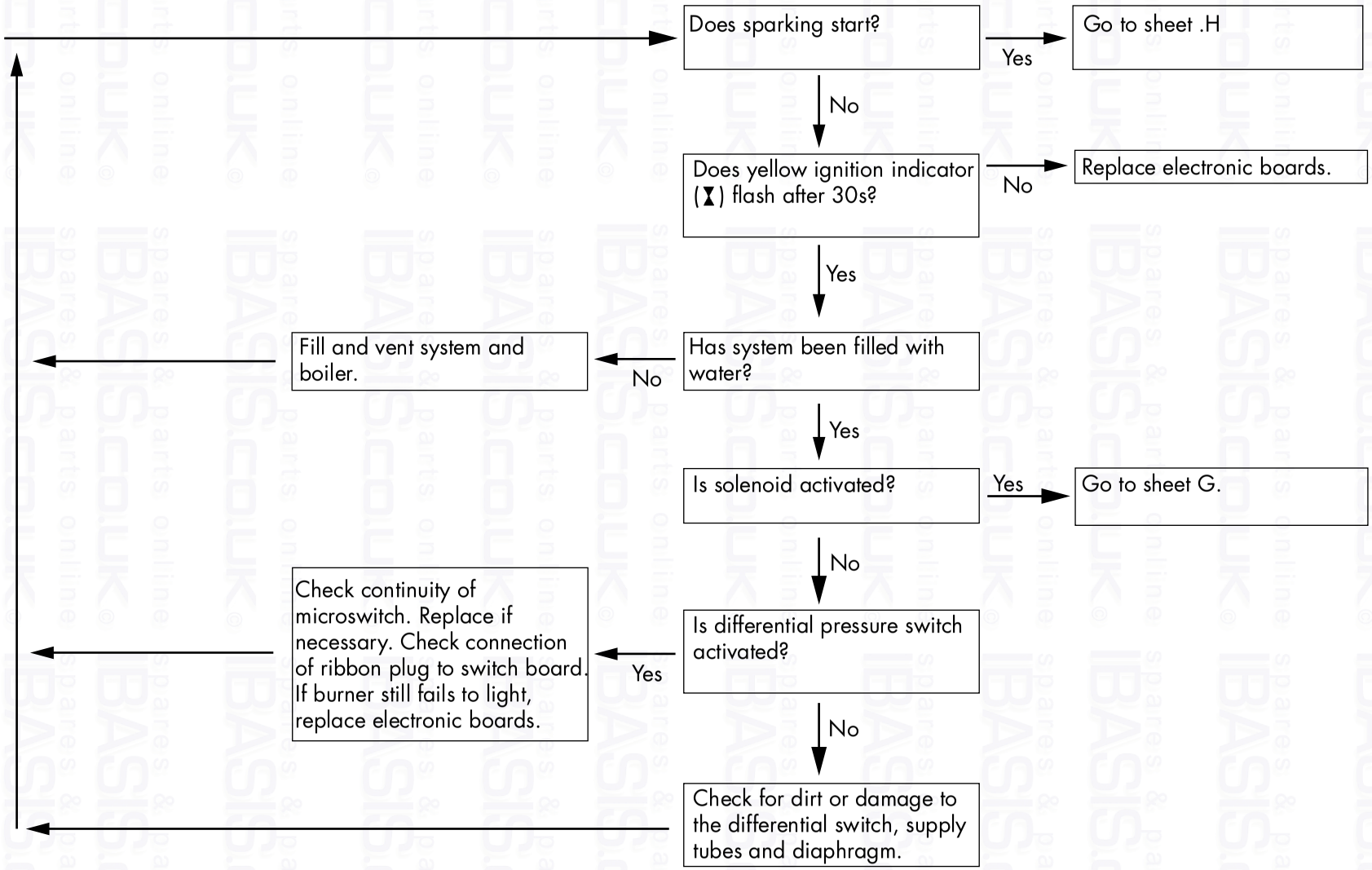

spares & parts online IBASIS.CO.UK®

Sheet G

Check ignition system and gas section

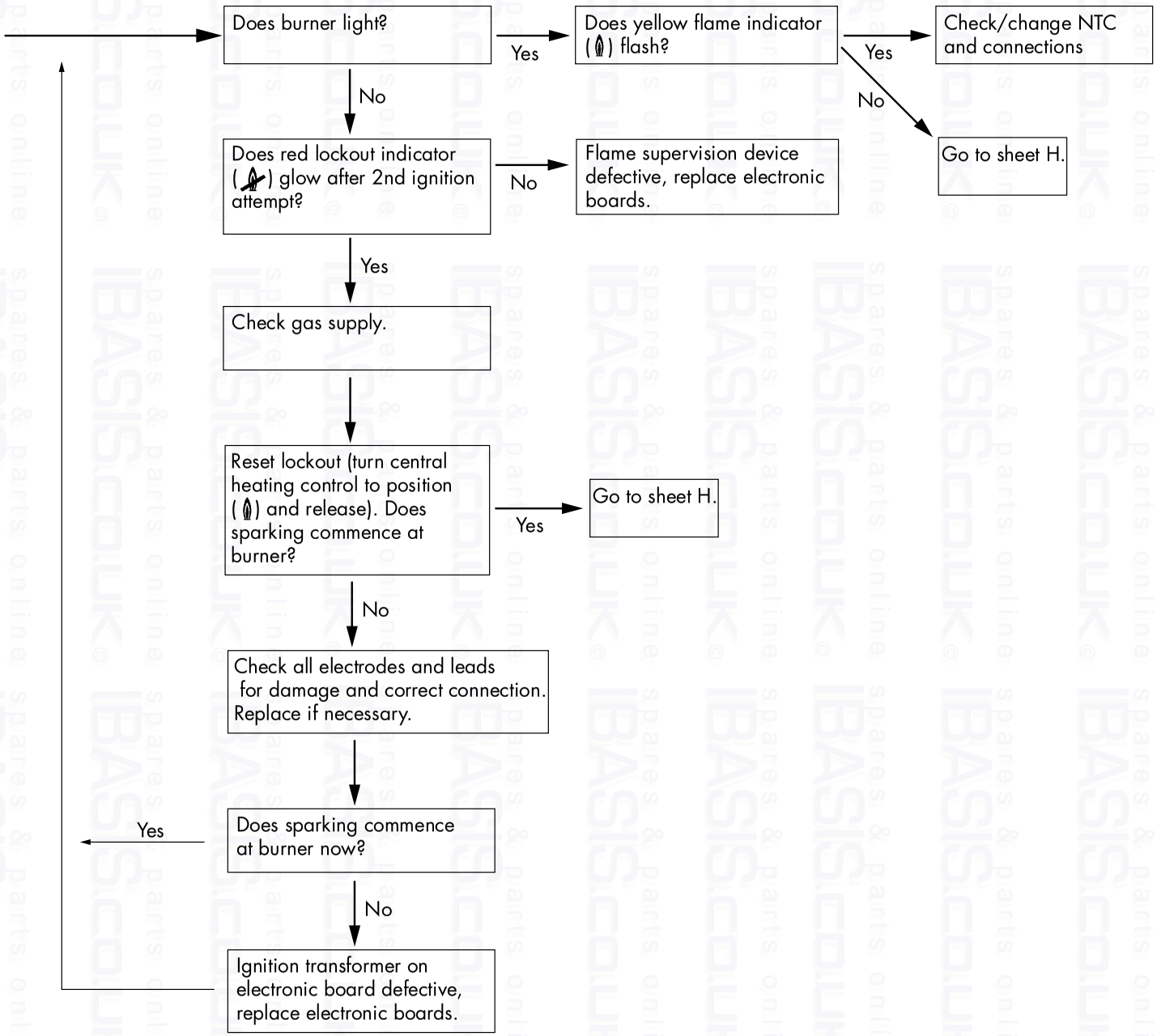

Sheet H

Check operation of burner and modulation

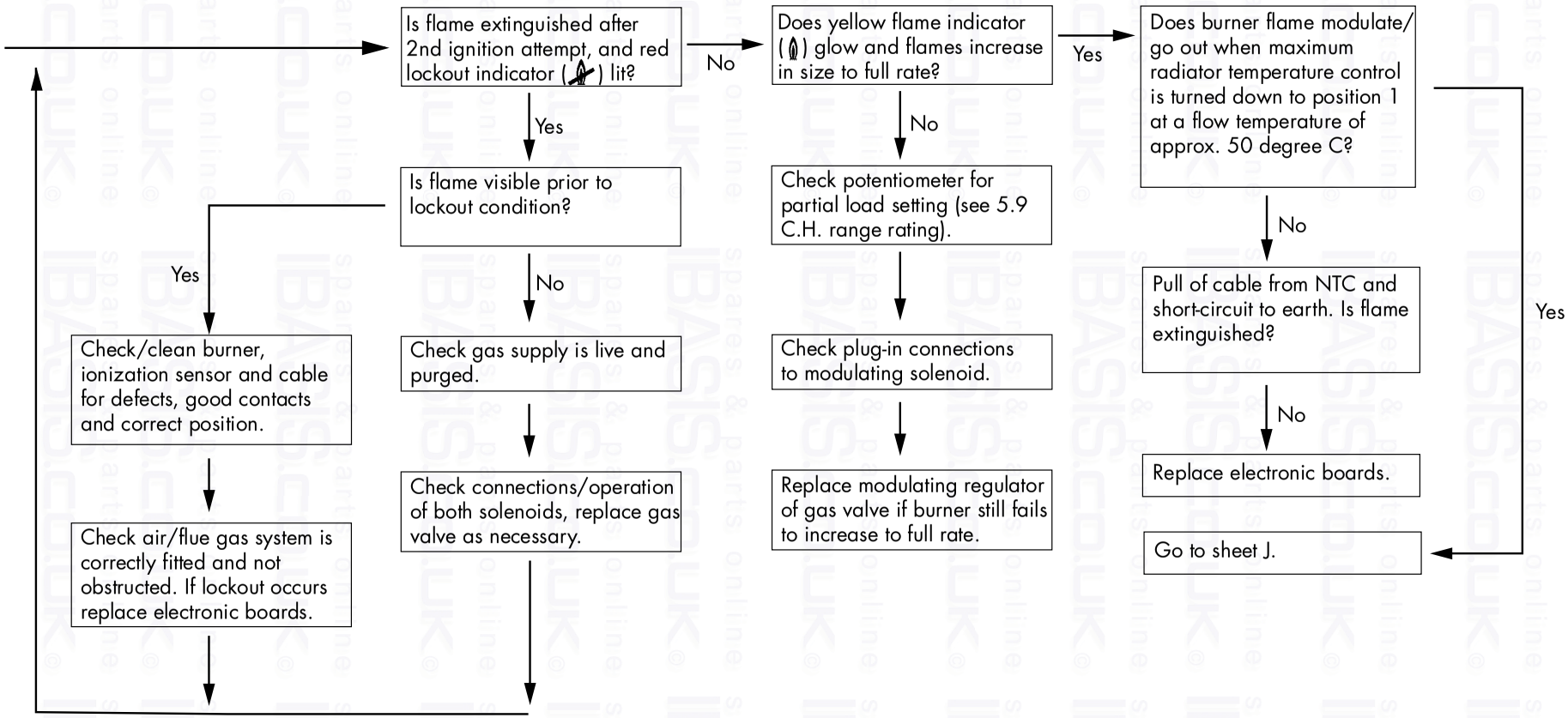

Sheet J

Check D.H.W. operation

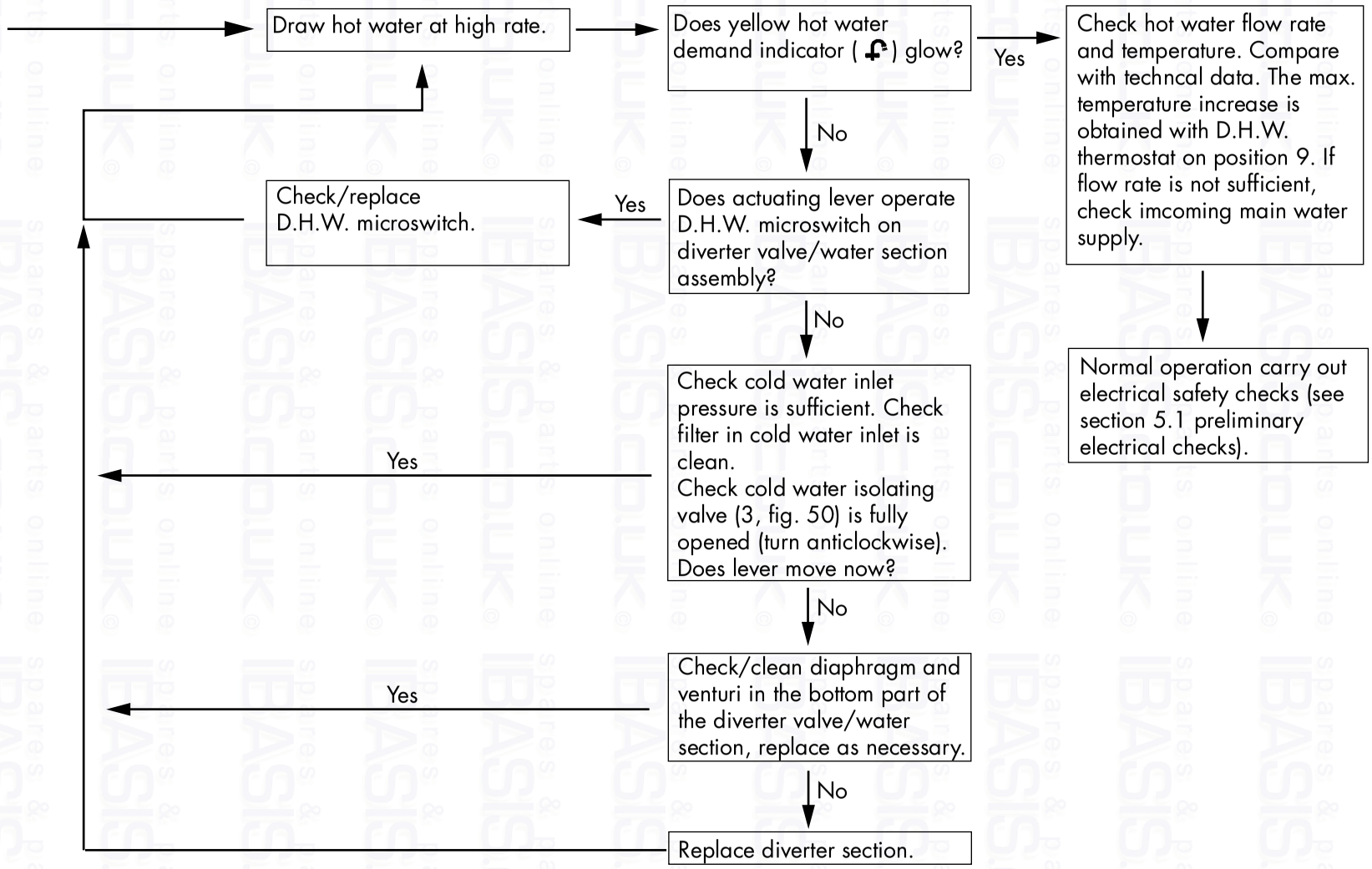

9 Electrical diagrams

9.1 Functional Flow diagram: VUW 242/1 E, 282/1 E

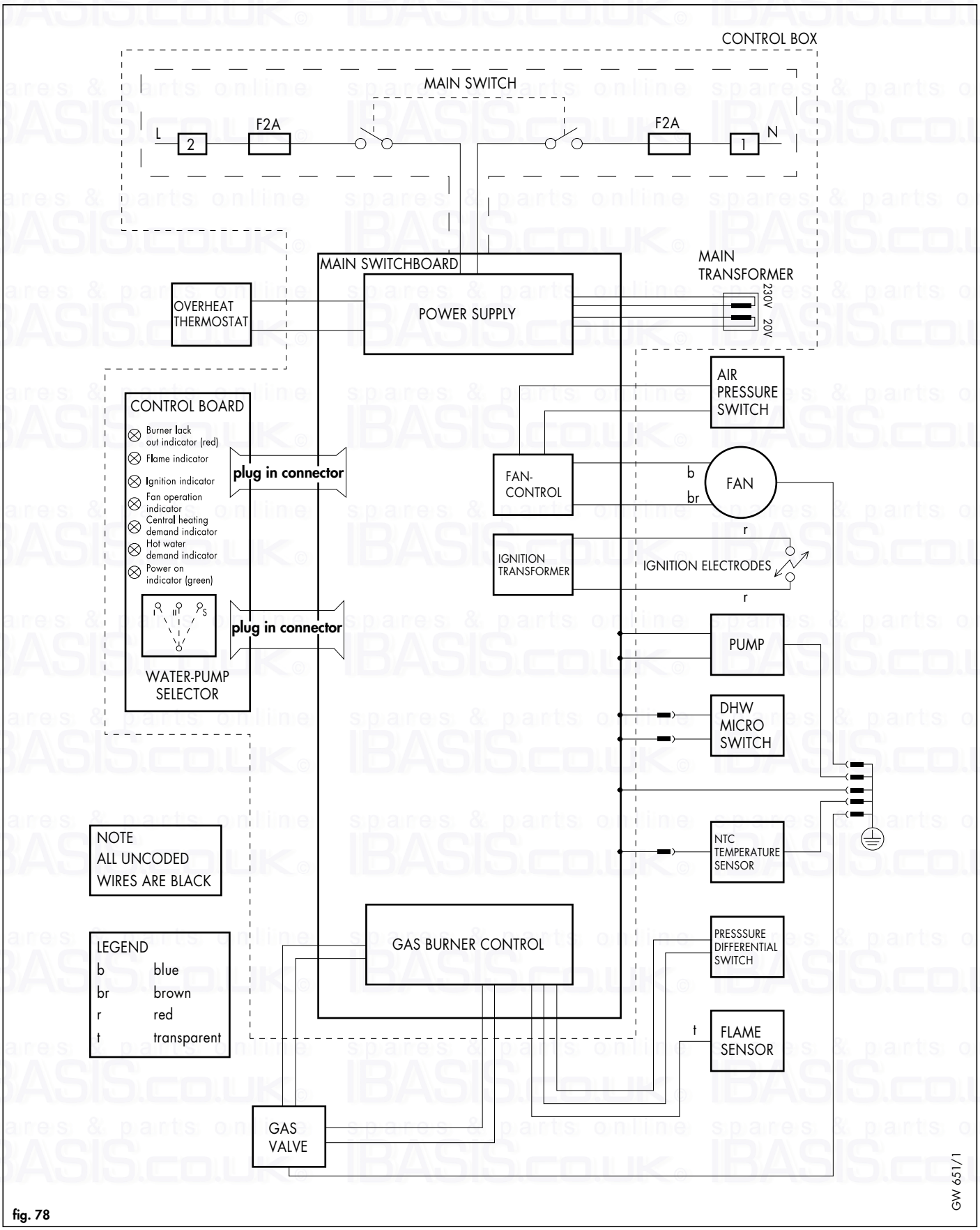

fig. 78

9.2 Wiring diagram: VUW 242/1 E, 282/1 E

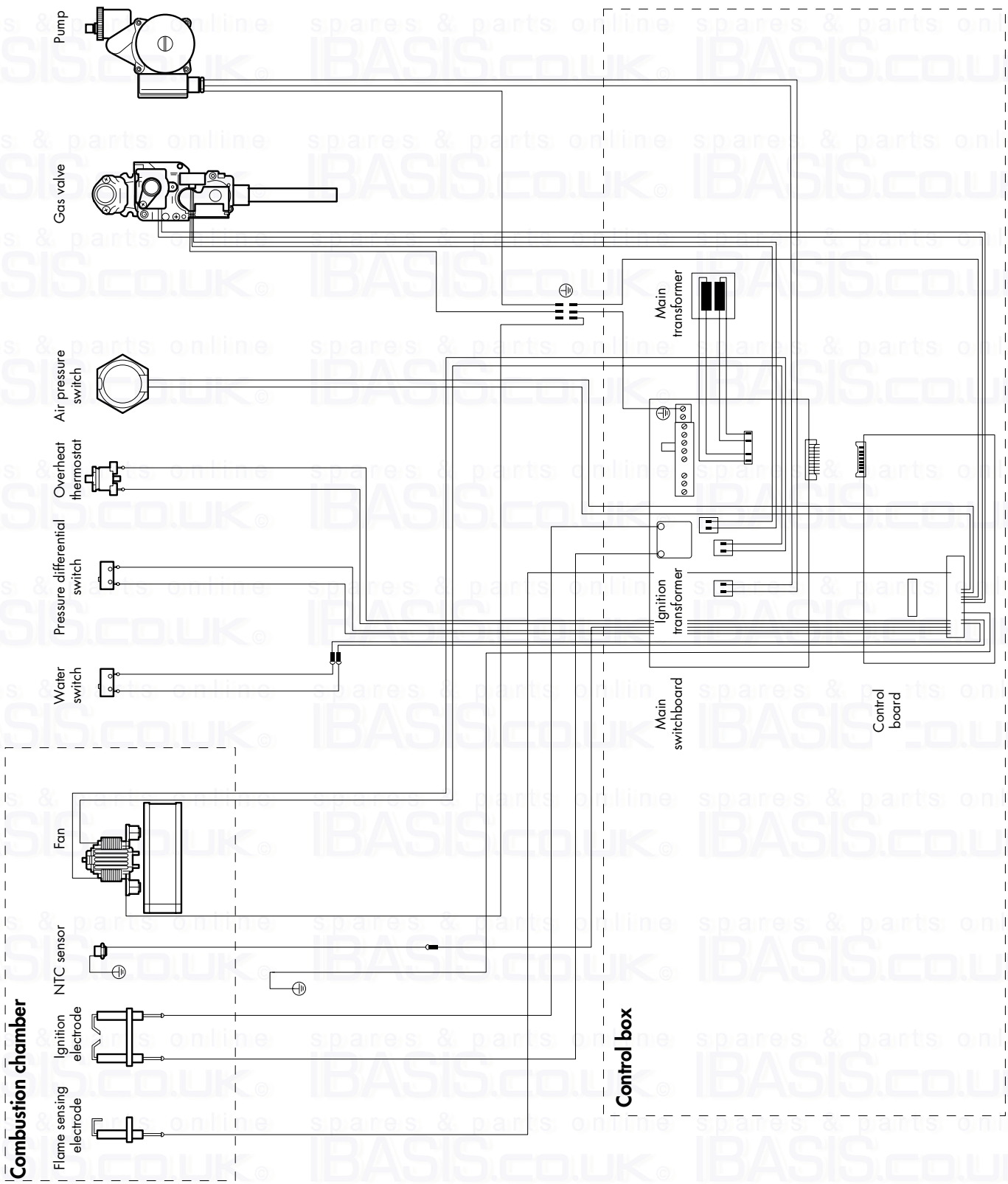

fig. 79

GW 1542/0

9.3 Schematic appliance circuit diagram: VUW 242/1 E, 282/1 E

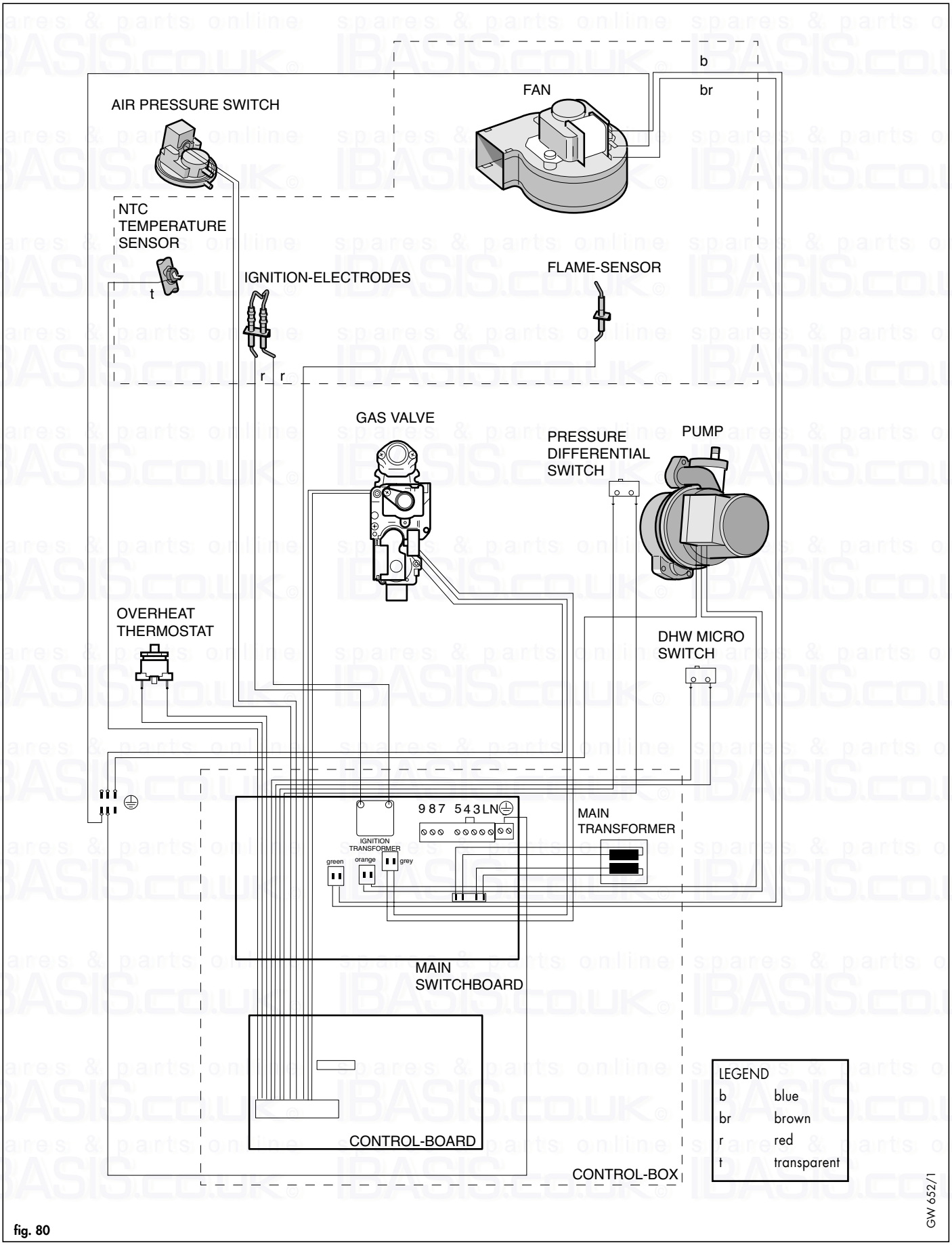

fig. 80

10. Short parts list

Key No.	Description	Part No.	GC No.
01	Fan	19 0162	
02	Air pressure switch	05 0557	
03	Main heat exchanger VUW 242/1	06 4951	
04	Main heat exchanger VUW 282/1	06 4952	
05	Burner VUW 242/1	04 1960	
06	Burner VUW 282/1	04 1961	
07	Diverter valve	01 1269	
08	DHW heat exchanger	06 4950	
09	Ignition electrode	09 0562	
10	Flame sensing electrode	09 0563	
11	HT lead (ignition electrode)	09 1534	
12	Expansion vessel	18 1045	
13	Pump	16 1111	
14	Gas valve (natural gas)	05 3369	
15	Modulating regulator (natural gas)	17 0376	
16	DHW microswitch	12 6255	
17	Diaphragm	01 0357	
18	Switch and control board	13 0438	
19	Main transformer	28 7442	
20	NTC temperature sensor	25 2805	
21	Temperature and pressure gauge	10 1558	

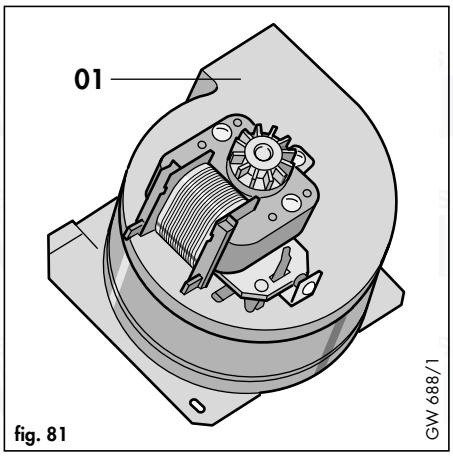

fig. 81

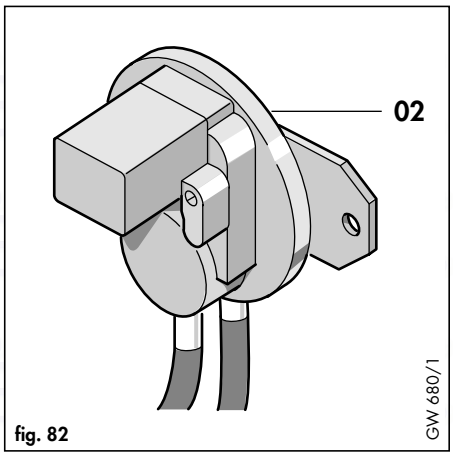

fig. 82

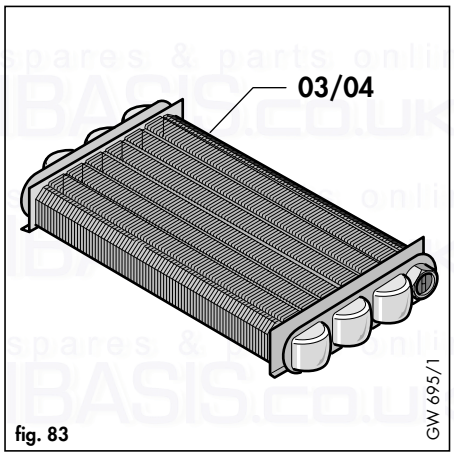

fig. 83

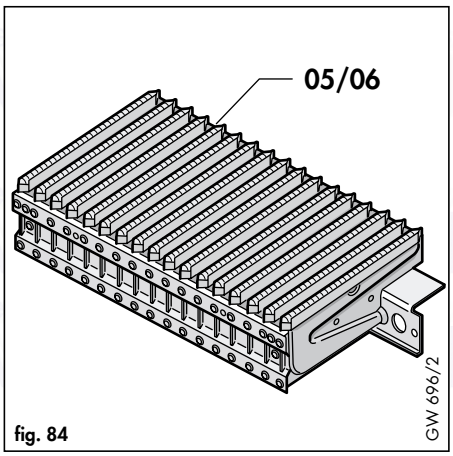

fig. 84

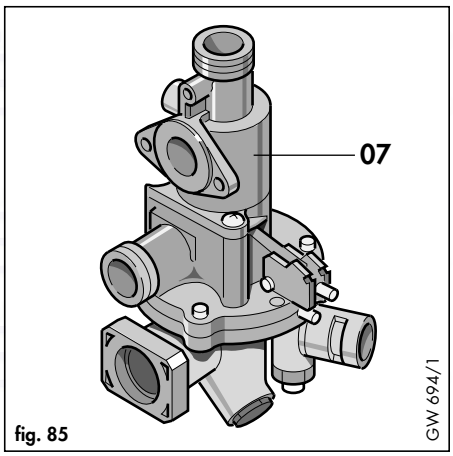

fig. 85

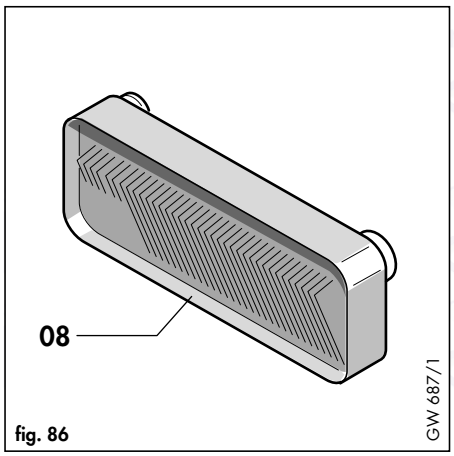

fig. 86

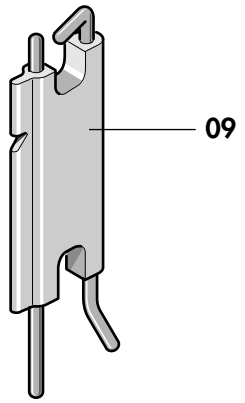

fig. 87 GW 683/1

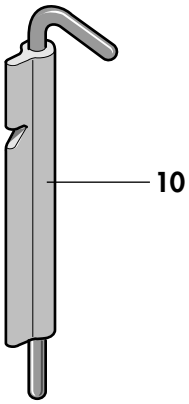

fig. 88 GW 684/1

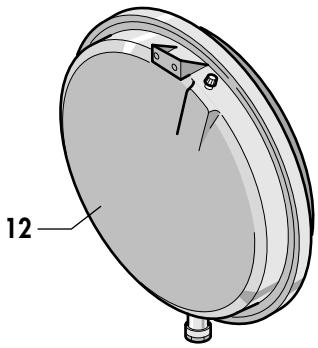

fig. 89 GW 693/1

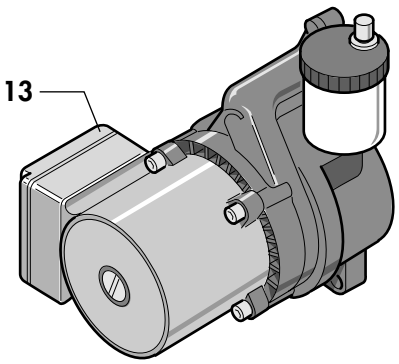

fig. 90 GW 686/1

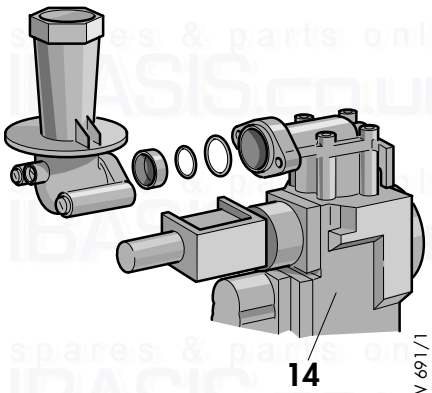

fig. 91 GW 691/1

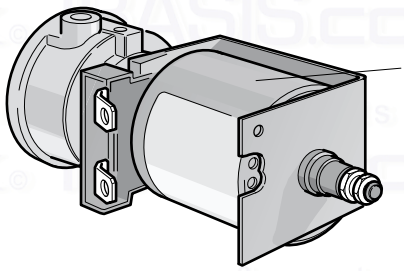

fig. 92 GW 682/1

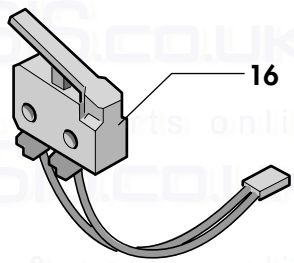

fig. 93 GW 689/1

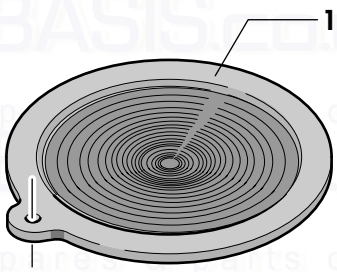

fig. 94 GW 690/1

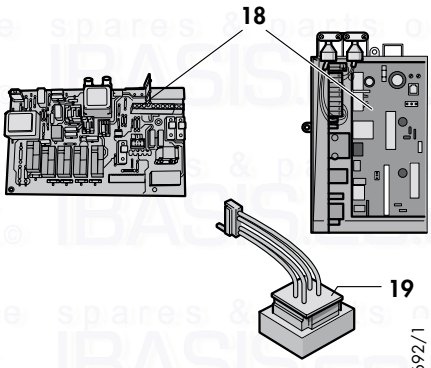

fig. 95 GW 692/1

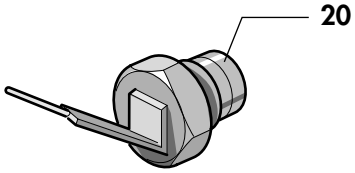

fig. 96 GW 685/2

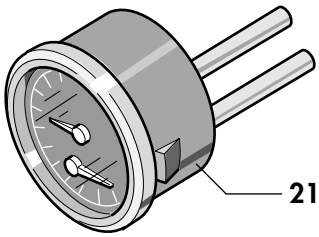

fig. 97 GW 681/2

11. Supplementary information for TURBOmax

L.P.G. Appliances:

VUW 242/1 EB
VUW 282/1 EB

The appliance delivered is designed for use with LPG.
Please read the instructions for installation therefore as follows:

Related documents to be supplemented by:

BS 5482: CP for domestic butane and propane gas burning installations

Part 1: Installations in permanent dwellings

Inlet pressure: Propane
37 mbar (14.6 in W.G.)
Butane
28-30 mbar
(11.0-11.8 in W.G.)

Technical Data

Type	VUW 242/1 E B	VUW 282/1 E B	
Countries of Destination	GB, IE	GB, IE	
Main burner jet size	16 x 7/075	18 x 7/075	number x mark.
Burner setting pressure	25.1 (9.9) Propane 19.3 (7.6) Butane	26.6 (10.5) Propane 20.6 (8.1) Butane	mbar (in W.G.) mbar (in W.G.)
Restrictor	2 * 350	2 * 375	marking
Delivered gas Propane Gross C.V. (s.t.)	G 31 96.65 G 30 125.81		MJ/m³ MJ/m³
Gas consumption (s.t.)	1.09 (Propane) 0.84 (Butane)	1.27 (Propane) 0.98 (Butane)	m³/h m³/h

spares & parts online IBASIS.CO.UK

0698 V
Printed in Germany - Imprimé en Allemagne
Printed on 100 % recycled paper
Subject to alteration
We do not accept liability for damage arising as a result of the non-observance of these instructions

Vaillant

HEATING, CONTROLS, HOT WATER

Head Office
Vaillant Ltd., Vaillant House,
Medway City Estate, Trident Close,
Rochester, Kent ME2 4EZ

Sales	01634	292310
Service Solutions	0870	6060 777
Technical Advice	01634	292392
Training	01634	292370

83 30 50 GB/IE