For the heating engineer

Installation and maintenance instructions

ecoCRAFT

Gas condensing boiler

VKK GB 806/3-E-H
VKK GB 1206/3-E-H
VKK GB 1606/3-E-H
VKK GB 2006/3-E-H
VKK GB 2406/3-E-H
VKK GB 2806/3-E-H

GB

spares & parts online IBASIS.CO.UK

Contents

1 Notes on the documentation ... 3
1.1 Storage of the documents ... 3
1.2 Symbols used ... 3
1.3 Applicability of the manual ... 3

2 Description of the appliance ... 4
2.1 Model description ... 4
2.2 Identification plate ... 4
2.3 CE label ... 4
2.4 Construction and function ... 5

3 Safety instructions and regulations ... 8
3.1 Safety instructions ... 8
3.2 Regulations ... 9

4 Assembly ... 10
4.1 Scope of delivery ... 10
4.2 Accessories ... 10
4.3 Installation location ... 11
4.3.1 Regulations pertaining to the installation location ... 11
4.3.2 Recommended minimum distances for installation ... 11
4.3.3 Aligning the boiler ... 11
4.4 Dimensions ... 11

5 Installation ... 13
5.1 General information on the heating system ... 13
5.2 Removing the casing ... 13
5.3 Gas connection ... 14
5.4 Heating side connection ... 14
5.5 Connecting the DHW cylinder ... 15
5.6 Air/flue gas installation ... 16
5.6.1 Flue gas connection, room-sealed ... 16
5.6.2 Flue gas connection, open flued ... 16
5.7 Connecting the boiler to the flue gas pipe ... 16
5.8 Condensate discharge ... 16
5.9 Electrical connection ... 17
5.9.1 Connecting the mains cable ... 18
5.9.2 Connecting a controller ... 18
5.9.3 Connecting electrical accessories and internal wiring ... 19

6 Start-up ... 22
6.1 Entering the service code ... 22
6.2 Start-up checklist ... 22
6.3 Function menu (for maintenance and service work) ... 24
6.4 Filling the system ... 26
6.4.1 Filling the heating side ... 26
6.4.2 Filling the siphon ... 26
6.5 Checking the gas setting ... 26
6.5.1 Checking the connection pressure (Gas flow pressure) ... 27
6.5.2 Checking the CO_2 content ... 27
6.5.3 Setting the CO_2 content ... 28
6.6 Checking the appliance function ... 30
6.7 Instructing the user ... 30

7 Adapting the unit to the heating system ... 31
7.1 Setting the maximum boiler flow temperature ... 32
7.2 Setting pump overrun time ... 32
7.3 Blocking time and heating partial load ... 32

8 Maintenance ... 32
8.1 General notes ... 32
8.2 Safety instructions ... 32
8.3 Operating hours indication ... 32
8.4 Chimney sweeper operation ... 32
8.5 Maintenance checklist ... 32
8.6 Cleaning the condensate collector ... 33
8.7 Cleaning the siphon ... 34
8.8 Checking the flue gas pressure monitor ... 34
8.9 Checking the combustion air pressure monitor ... 34
8.10 Cleaning the burner ... 35
8.11 Checking the safety temperature limiter ... 36
8.12 Functional check ... 36

9 Troubleshooting ... 36
9.1 Status messages ... 36
9.2 Diagnostic mode ... 37
9.3 Error messages ... 39
9.4 Resetting the interlock after switch-off by the safety temperature limiter (STL) ... 40
9.5 General notes ... 40
9.6 Measurements on the components ... 40

10 Factory customer service/manufacturer's guarantee ... 41
10.1 Vaillant Service ... 41
10.2 Vaillant warranty ... 41

11 Recycling and disposal ... 41
11.1 Appliance ... 41
11.2 Packaging ... 41

12 Technical data ... 42

1 Notes on the documentation

The following instructions are intended to help you throughout the entire documentation.
Further documents apply in combination with this installation and maintenance manual.
We accept no liability for damage caused by a failure to observe these instructions.

Documents which are also valid and auxiliary service equipment.

For the owner of the system:
Operating manual No. 00200587171
Short-form instructions No. 0020063363

Auxiliary service equipment:
The following test and measuring equipment are required for inspection and maintenance:
- CO_2 measuring instrument
- Pressure gauge
- flue gas analyser
- Torque wrench

1.1 Storage of the documents

Please hand this installation and maintenance instruction manual and the auxiliary equipment to the operator of the installation, whose responsibility it is to ensure the manuals and auxiliary equipment are available whenever required.

1.2 Symbols used

Please observe the following when operating the unit:
Safety instructions in this installation manual!

Danger!
Immediate risk of serious injury or death!

Danger!
Danger of death from electric shock!

Danger!
Danger of burning and scalding!

Caution!
Potentially dangerous situation for the product and the environment!

Note
Useful information and instructions.

- Symbol for a necessary task

1.3 Applicability of the manual

These installation instructions apply exclusively to appliances with the following part numbers:

Appliance type	Part number
VKK GB 806/3-E-H	0010005410
VKK GB 1206/3-E-H	0010005411
VKK GB 1606/3-E-H	0010005412
VKK GB 2006/3-E-H	0010005413
VKK GB 2406/3-E-H	0010005414
VKK GB 2806/3-E-H	0010005415

Table 2.3 Overview of the part numbers

The part number of the appliance can be found on the identification plate (see Section 2.2).

2 Description of the appliance

2.1 Model description

Appliance type	Designated country (designation in accordance with ISO 3166)	Category of permit	Type of gas	Nominal heat output range P (kW)
VKK GB 806/3-E-H	GB (Great Britain) IE (Ireland)	I2H	G20 (natural gas E)	13.6 - 78.2 (80/60 °C) 14.1 - 80.4 (60/40 °C) 14.7 - 84.1 (40/30 °C)
VKK GB 1206/3-E-H				21.3 - 113.4 (80/60 °C) 22.1 - 116.5 (60/40 °C) 23.1 - 121.8 (40/30 °C)
VKK GB 1606/3-E-H				26.2 - 156.5 (80/60 °C) 27.1 - 160.8 (60/40 °C) 28.4 - 168.2 (40/30 °C)
VKK GB 2006/3-E-H				43.1 - 196.8 (80/60 °C) 44.2 - 201 (60/40 °C) 46.2 - 210.2 (40/30 °C)
VKK GB 2406/3-E-H				47.0 - 236.2 (80/60 °C) 48.2 - 241.2 (60/40 °C) 50.4 - 252.2 (40/30 °C)
VKK GB 2806/3-E-H				51.0 - 275.5 (80/60 °C) 52.3 - 281.4 (60/40 °C) 54.7 - 294.3 (40/30 °C)

Table 2.1 Overview of types of unit

2.2 Identification plate

The identification plate is mounted on the front of the boiler under the front casing. It becomes visible after the front section of the casing is removed.

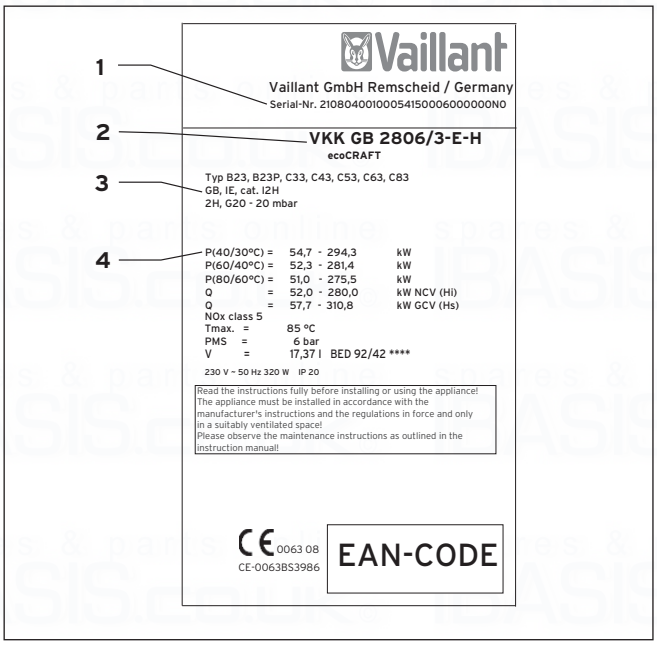

Fig. 2.1 Identification plate

Key
1 Serial No.
2 Model designation
3 Type approval designation
4 Technical Data

Explanation of the model designation

The following table explains the model designation, using the VKK GB 2806/3-E-H as an example.

VKK GB 2806/3-E-H	Equipment
VKK	Vaillant gas-fired condensing boiler
GB	Great Britain
280	Unit size (output in kW)
6	Gas-fired condensing boiler
3	Boiler production series
H	Gas category I2H

Table 2.2 Explanation of the model designation

2.3 CE label

CE labelling shows that the appliances comply with the basic requirements of the following directives:
- Gas appliances directive (90/396/EEC)
- Electromagnetic compatibility directive with threshold class B (2004/108/EEC)
- Low voltage directive (2006/95/EEC)

The appliances meet the basic requirements of the efficiency requirements directive
(Council Directive 92/42/EEC) as condensing boilers.

2.3 Intended use

Vaillant gas-fired condensing boilers
VKK GB 806/3 -2806/3-E-H are constructed in accordance with state of the art technology and recognised safety regulations.
Nevertheless, there is still a risk of injury or death to the user or others or of damage to the device and other property in the event of improper use or use for which it is not intended.
This unit is not intended for use by persons (including children) having limited physical, sensory or mental capacities or who have inadequate experience and/or knowledge, unless they are supervised by a person responsible for their safety or have been given instructions by him regarding the operation of the unit.
Children must be supervised to ensure that they do not play with the unit.
The boiler is suitable for connection to sealed central heating installations.
Any other or additional use is considered to be improper. The manufacturer or supplier is not liable for any resulting damage. The user alone bears the risk.
Use includes observance of the operating and installation manuals and all other applicable documents, as well as adherence to the maintenance and inspection conditions.

Caution!
Any improper use is forbidden.

2.4 Construction and function

The ecoCRAFT is a gas-fired condensing boiler which is used as a heat producer for hot water central heating installations up to 85 ºC.
It is suitable for operation in new installations and for modernisation of existing heating installations in multi-occupancy houses and in business units. The boiler is suitable for connection to commercial heating control systems, Vaillant controls and BEMS systems. The boiler is suitable for connection to open-flue systems. Air for combustion must be supplied in accordance with BS 6644. The boiler is suitable for connection to room sealed flues „Type C".

Equipment

- Modulation range, see Table 2.3
- Reduced environmental impact as a result of the extremely low emission of toxic substances: NOx <60 mg/kWh and CO < 20mg/kWh
- Compact high efficiency heat exchanger with NTC sensor
- Modulating multi-port burner
- Class A gas valve
- Gas - air mixture regulation
- Electronically controlled fan
- Flow manifold with NTC sensor
- Return manifold with NTC sensor
- Safety temperature limiter (STL)
- Operating panel with multi-function display
- Flue gas temperature max. 80 ºC
- Condensate collector
- Polypropylene siphon
- Internal frost protection function
- Interface for control of a modulating pump
- Internal cylinder temperature regulation
- Interface for temperature-based activation
- Adjustable boiler feet

Regulation range

Appliance type	Minimum Load		Maximum Load	
	kW	%	kW	%
VKK GB 806/3-E-H	14.0	17.5	80.0	100
VKK GB 1206/3-E-H	22.0	19.0	115.9	100
VKK GB 1606/3-E-H	27.0	17.0	160.0	100
VKK GB 2006/3-E-H	44.0	22.0	200.0	100
VKK GB 2406/3-E-H	48.0	20.0	240.0	100
VKK GB 2806/3-E-H	52.0	19.0	280.0	100

Table 2.3 Regulation ranges

Overview of the operating controls

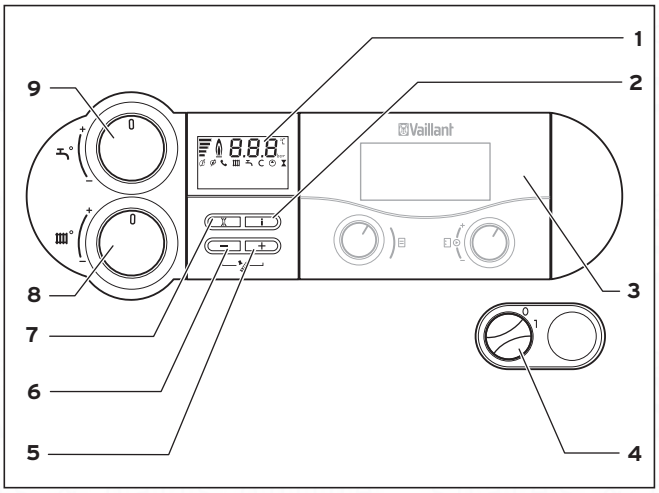

Fig. 2.2 ecoCRAFT operating controls

To open the front panel, hold the recess and fold the panel out. You can now see the controls, which have the following functions (cf. fig. 4.1):

1 Display indicating the current heating flow temperature, the pressure of the heating system, the operating mode and other additional information

2 Button "**i**" for displaying information

3 Controller (accessory)

4 On and Off switch

5 "**+**" button for navigating forwards through the display view (used by expert technician to specify settings and for troubleshooting) or displaying the storage temperature (VC with cylinder sensor)

6 "**–**" button for navigating backwards through the display view (used by expert technician to specify settings and for troubleshooting) and for displaying the filling pressure of the heating system

7 "**Reset**" button for resetting the system in the case of specific faults

8 Rotary knob to adjust the heating flow temperature.

9 Rotary knob to adjust the hot water temperaure

Overview of the functional controls

Note
When using Vaillant controls both dials must be turned to maximum position.

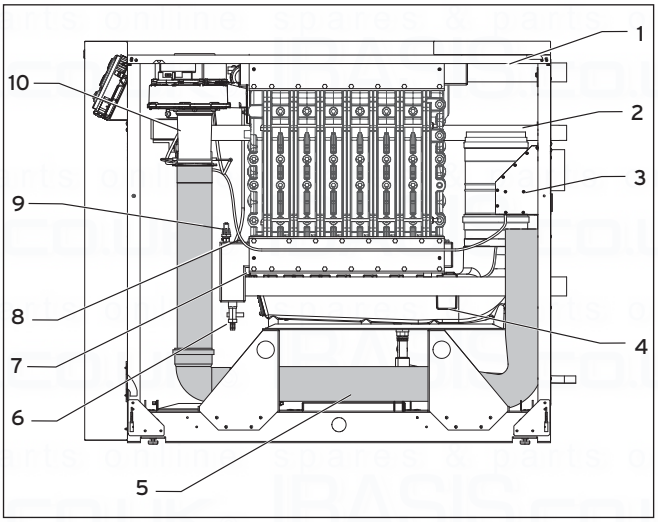

Fig. 2.3 View from the right hand side

Key
1 Flow
2 Gas pipe
3 Air inlet box with dust filter
4 Condensate pan
5 Supply air hose
6 Drain point
7 Return
8 Return NTC
9 Water pressure sensor
10 Venturi

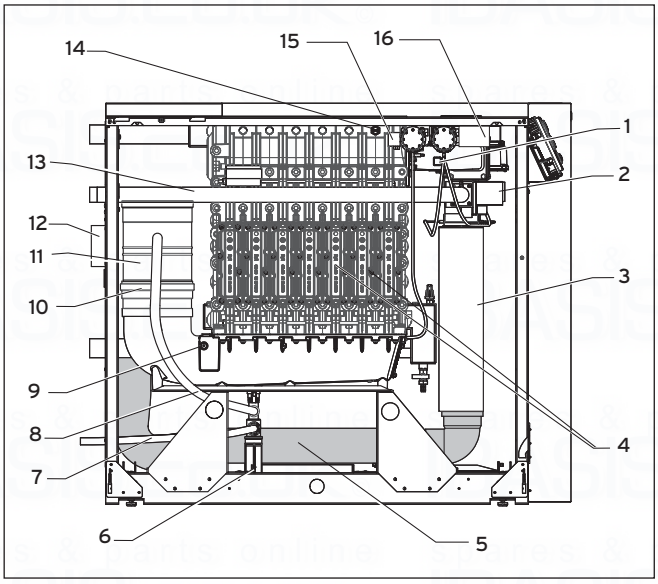

Fig. 2.4 View from the left hand side

Key
1 Fan
2 Gas valve
3 Supply air silencer
4 Inspection opening for heat exchanger
5 Supply air hose
6 Siphon
7 Condensate discharge
8 Condensate trap/siphon connection
9 Flue gas STL (optional)
10 Flue gas silencer
11 Condensate trap
12 Supply air box with dust filter
13 Gas pipe
14 Boiler NTC and STL sensor
15 Safety temperature limiter (STL) reset button
16 VR35 0-10 V pump module

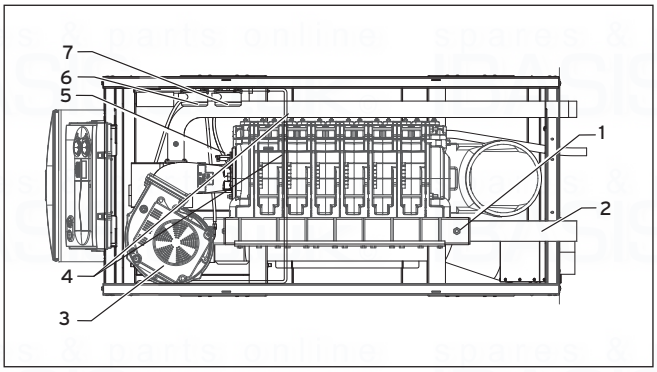

Fig. 2.5 Plan view

Key
1 Flow NTC
2 Flow
3 Fan
4 Safety temperature limiter (STL) and block NTC
5 Ignition and monitoring electrode
6 Flue gas pressure monitor
7 Air pressure monitor

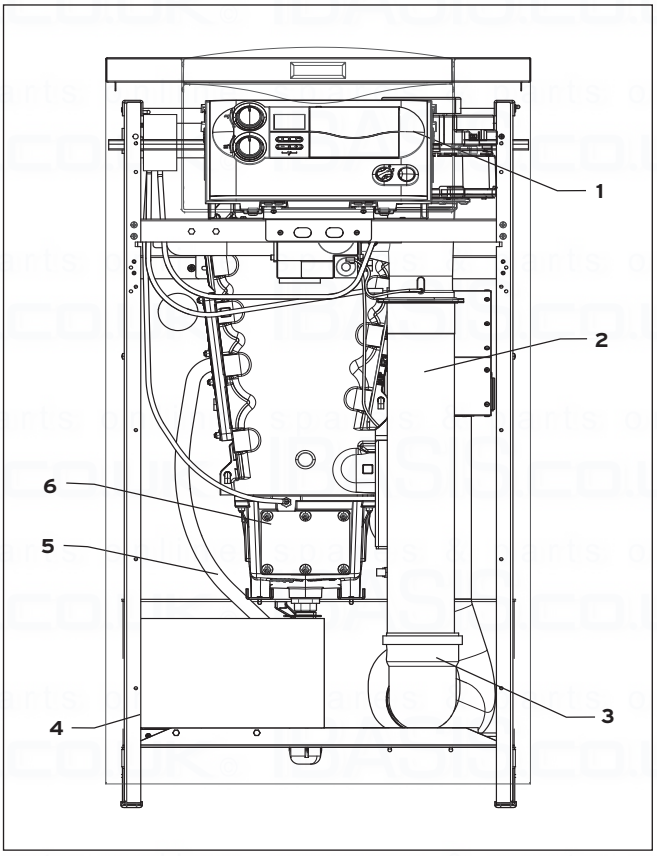

Fig. 2.6 Front view

Key
1 Control panel
2 Supply air silencer
3 Supply air filter
4 Neutralisation box (optional)
5 Condensate discharge
6 Inspection opening for condensate pan

3 Safety instructions and regulations

The appliance may only be installed by a competent qualified person registered with Corgi.

3.1 Safety instructions

The combustion air fed to the unit must be free of chemicals e.g. fluorine, chlorine or sulphur. Sprays, solvents or cleaning agents, paints and adhesives can contain such materials which can, in certain circumstances, lead to corrosion when operating the unit, including the flue gas installation.

Caution!
Malfunction!
The combustion air must be free of particles or the burner can be contaminated with dirt. Take particular care that no building dust or fibres of insulating material are present in the combustion air.

In business premises such as hairdressing salons, painting or carpentry workshops, cleaning businesses etc., when installed as an open flued appliance. It is desirable that the boiler is installed in a purpose made boiler room conforming to the guidance within BS 6644.
The boiler shall only be sited on floors and adjacent to walls capeable of withstanding at least 65 degrees C. (However, the recommended minimum distance in section 4.3.2 must be observed).
A safety valve must be fitted to the boiler as defined in BS 6644 for both single or modular cascades of boilers.

Note concerning flue design:
Modulation of the boiler together with combustion air matching produces high values of combustion efficiency. This requires technical evidence of the suitability of the flue in according with the relevant standards.

Installation

- Flush the heating system thoroughly before connecting the appliance!
  In this way, residue such as cinders, hemp, putty, rust, welding residues, coarse dirt and similar substances are removed from the pipes.
  Otherwise such substances can be deposited in the appliance and cause damage.

Caution!
Leaks!
Make sure that the connection and gas pipes are not under stress when installed to avoid leakage in the heating installation or at the gas connection!

Caution!
Damage to the screwed connections!
To tighten or loosen bolts, only use suitable open-ended spanners (do not use pliers or extensions etc.) Improper use or unsuitable tools can cause damage, such as gas or water leaks!

Always tighten the couplings fixing the flow distributor and the return collector to the heat exchanger block with a torque wrench set to 12 Nm.
On sealed heating installations, a type-approved safety valve corresponding to the heat capacity must be fitted.

Caution!
Damage to the gas valve!
The gas regulating block may be tested for leakage only with a maximum pressure of 110 mbar! The operating pressure must not exceed 60 mbar! If these pressures are exceeded, the gas valve may be damaged.

The electrical installation must only be made by a qualified electrician in accordance with BS 7671 and the Electricity at Work Regulations.

Danger!
Danger of death from electric shock!
The supply terminals in the terminal box of the device are under voltage even if the mains switch is off. Before working on the appliance, turn off the power supply and secure it against being switched on again!

Start-up
The heating system must be thoroughly cleansed before use. The boiler heat exchanger is made from aluminium and any inhibitor used must be suitable for use with aluminium. Always seek the advice of a professional water treatment company. Advice may be sought from:

Fernox
Cookson Electronics
Forsyth Road
Sheerwater
Woking
Surrey
GU21 5RZ

Sentinel Performance Solutions Ltd
The Heath Business & Technical Park
Runcorn
Cheshire
WA7 4QX.

If frost or corrosion preventative is added to the heating water this can cause changes in the seals and can cause noises to be created during the heating process. Vaillant assumes no liability for this and such consequential damages.
- Inform the user of the procedure for frost protection.

The boiler is suitable for installation to artificially softened water supplies.

Only for natural gas:
The inlet gas working pressure must not be less than 17 mbar whilst operating at maximum output.

Inspection and maintenance
Inspection, maintenance and repair work should only be undertaken by an approved heating installation company. Inspections/Maintenance work not carried out can result in damage to property and personal injury.
The electrical installation must only be made by a qualified electrician in accordance with BS 7671 and the Electricity at Work Regulations.

Danger!
Danger of death from electric shock!
The supply terminals in the terminal box of the device are under voltage even if the mains switch is off. Before working on the appliance, turn off the power supply and secure it against being switched on again!

- Protect the switch box from water spray.

Danger!
Danger of explosion through gas leakage! When installing, maintaining and repairing the unit, always check the gas carrying components, including the burner seals, for gas leaks. We recommend the use of an electronic gas sensor instrument.

Danger!
Danger of burning and scalding!
There is danger of being injured or scalded by the boiler and by all components carrying water. Only carry out work on these components once they have cooled down.

Troubleshooting
- Disconnect the unit from the mains before starting work. Close the gas valve and the maintenance valves.
- Drain the appliance if you want to replace water-carrying components within.

Danger!
Danger of death from electric shock!
The supply terminals in the terminal box of the device are under voltage even if the mains switch is off. Before working on the appliance, turn off the power supply and secure it against being switched on again!

- Make sure that no water falls on live components (e.g. electronic box etc.).
- Use only new gaskets and O-rings.
- Perform a functional test after you have finished this work.

3.2 Regulations
To ensure the safe installation of your appliance, the laws, regulations, technical rules and standards pertaining to the installation must be considered and adhered to.

Attention shall be paid to the regulations, guidelines and standards in force. In particular, reference shall be made to the following regulations, guidelines, standards and rules:
The electrical connections to the boiler MUST be in accordance with the BS 7671, The Electricity at Work Act, and tested accordingly.
The Clean Air Act 1993 and the 3rd Edition of the 1956 Clean Air Act.
The Building Regulations, England and Wales, The Building Standards, Scotland, and any requirements determined by the local authorities within.
Water supply (water fittings) regulations 1999.
Detailed recommendations are also contained in the following documents:

BS 5854	Code of practice for flues and flue structures in buildings.
BS EN 12828	Design of water-based heating systems.
BS 6644	Specification for the installation of gas-fired hot water boilers with rated inputs between 70kW (net) and 1.8MW (net) (2nd and 3rd family gases).
BS 6880	Code of practice for low temperature heating systems with outputs greater than 45kW. Part 1 Fundamental and design considerations. Part 2 Selection of equipment. Part 3 Installation, commissioning and maintenance.
BS 6981	Installation of low pressure gas pipework of up to 28mm in domestic premises.
BS 7074	Application, selection and installation of expansion vessels and ancillary equipment for sealed water systems. Part 1 Code of practice for domestic heating and hot water. Part 2 Code of practice for low and medium temperature hot water systems.
BS 6700	Specification for the design, installation, testing and maintenance of services supplying water for domestic use within buildings and their curtilages.

Institute of Gas Engineers Publications

IGE/UP/1	Soundness testing and purging of industrial and commercial gas installations.
IGE/UP/1A	Soundness testing and purging of small low pressure industrial and commercial natural gas installations.
IGE/UP/10	Installation of gas appliances in industrial and commercial premises. Part 1 Flued appliances

4 Assembly

The boilers are supplied ready for connection in a packaging unit with the casing fitted.

4.1 Scope of delivery

- Check the delivery for completeness and potential damage using the following overview.

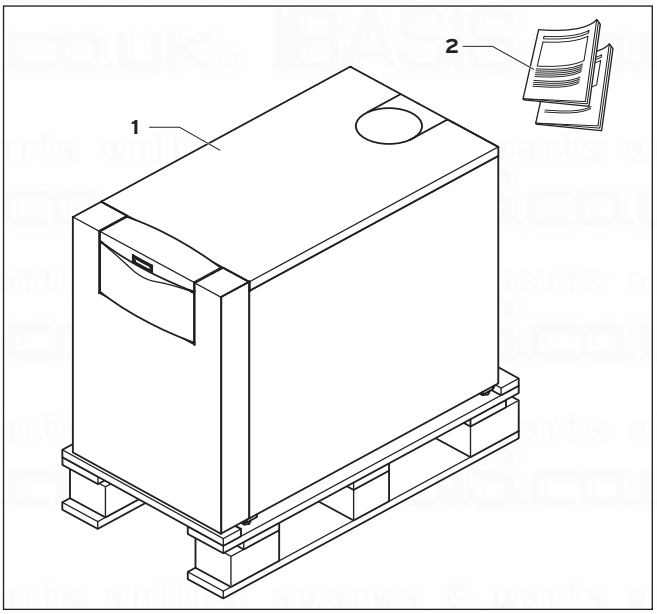

Fig. 4.1 Scope of delivery

Item	Quantity	Name
1	1	Unit (casing fitted)
2	5	Operating manual, Short operating manual, Installation manual, Guarantee card

Table 4.1 Scope of delivery

4.2 Accessories

The following accessories are required for the installation in addition to the necessary safety and isolating devices:

- Heating controller (e.g. VRC 430 or 630),
- Low loss header (optional),
- Boiler circulating pump (with fixed or variable speed),
- Neutralisation box, if required.

4.3 Installation location

• The unit should be installed in a frost-protected room. The unit can be operated in ambient temperatures between approx. 4 °C and 50 °C.
When selecting the installation site, the weight of the boiler including the water inside, as determined from the "Technical Data" table (Chapter 12), must be taken into account.

A heating boiler pedestal (sound-deadening) or similar installation can be used to provide noise deadening; we recommend installing the unit on a boiler support foundation 5 to 10 cm thick.

4.3.1 Regulations pertaining to the installation location

Note!
The boiler should be installed in a purpose built boiler room in accordance with BS 6644

The approval of the relevant building regulations authority must be obtained for the selection of the installation site and for the characteristics of the ventilation and flue gas handling systems of the installation room. The combustion air fed to the appliance must be physically free of chemical substances that contain, e.g. fluorine, chlorine and sulphur. Sprays, paints, solvents and cleaning materials and adhesives contain such substances, which can, during operation of the unit, lead to corrosion under unfavourable conditions, including in the flue gas installation.

Caution!
Malfunction!
The combustion air must be free of particles or the burner can be contaminated with dirt.
Take particular care that no building dust or fibres of insulating material are present in the combustion air.

For this reason, the boiler is factory-fitted with a dust filter. During a construction phase the boiler must only be operated with this filter.

- Replace the filter after 10 weeks at the most, and even sooner if there is heavy contamination.
- Remove the filter after the completion of the construction phase.
- Clean the supply air hose.

4.3.2 Recommended minimum distances for installation

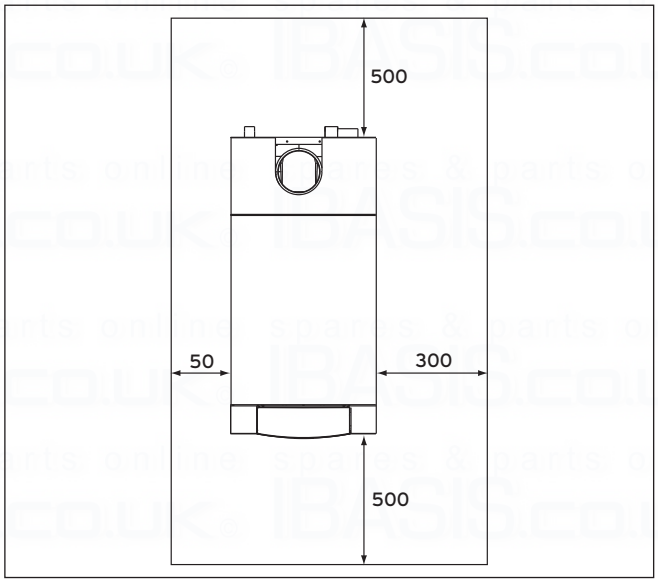

Fig. 4.2 Recommended distances during installation

- Keep to the recommended minimum distances in order to be able to carry out assembly and maintenace work with as little impediment as possible.

4.3.3 Aligning the boiler

- The boiler should be levelled using the height-adjustable feet to prevent water condensate from flowing out of the condensate collector.

4.4 Dimensions

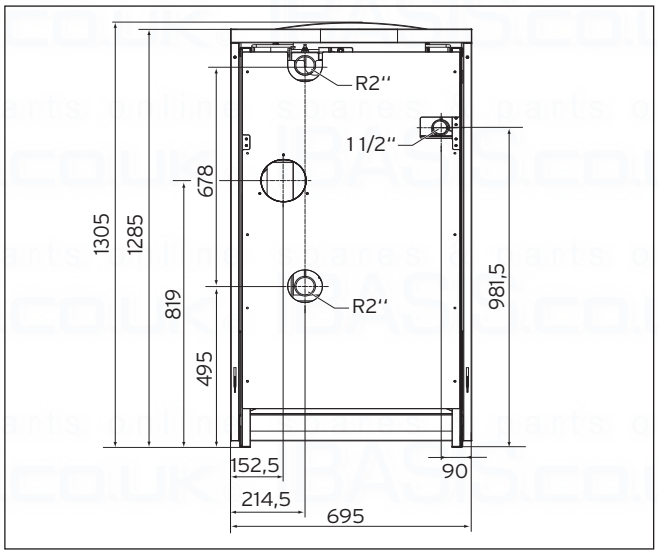

Fig. 4.3 Pipe connection dimensions

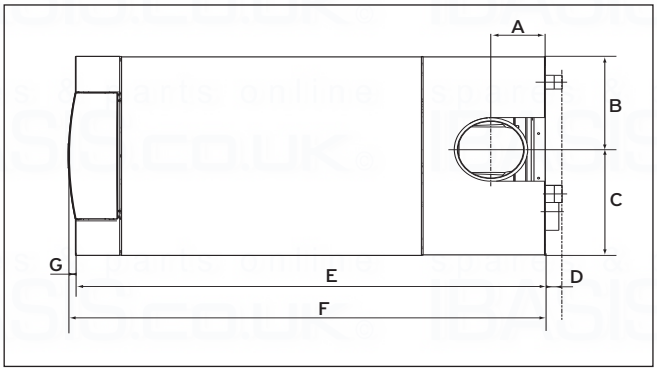

Fig. 4.4 Appliance dimensions

	VKK GB 80-1606/3-E-H	VKK GB 200-2806/3-E-H
A	165	165
B	326	326
C	369	369
D	50	50
A	1168	1478
F	1240	1550
G	22	22

Table 4.2 Appliance dimensions

Boiler Type	VKK GB 806/ 3-E-H	VKK GB 1206/ 3-E-H	VKK GB 1606/ 3-E-H	VKK GB 2006/ 3-E-H	VKK GB 2406/ 3-E-H	VKK GB 2806/ 3-E-H
Flue pipe	150	150	150	200	200	200
Supply air pipe	130	130	130	130	130	130

Table 4.3 Dimensions of supply air and flue pipes

5 Installation

5.1 General information on the heating system

Caution!
Malfunctions!
Flush the heating system thoroughly before connecting the appliance! In this way, residue such as cinders, hemp, putty, rust, welding residues, coarse dirt and similar substances are removed from the pipes. Otherwise such substances can be deposited in the appliance and cause damage.

- A safety valve must be fitted to the boiler as described in BS 6644.
- The system shall be vented at high points to prevent air locks.
- The system shall be filled and drained in accordance with guidance in BS 6644 and the current Water Regulations.

The safety temperature limiter fitted to the boiler serves, in addition to the water pressure switch, as a low water level safety device.
The fault-induced shut-down temperature of the boiler is approx. 110 °C (nominal shut-down temperature 110 °C, tolerance - 6 K).

- If plastic pipes are used in the heating system, you must fit a suitable pipe thermostat on this section of the heating system. This is required to protect the heating installation from temperature-related damage. The thermostat can be wired to the plug for the contact thermostat (blue ProE plug).
- When using non-oxygen barrier plastic pipes in the heating system, you must install to plate to plate heat exchanger downstream for system separation, to prevent corrosion in the boiler.

5.2 Removing the casing

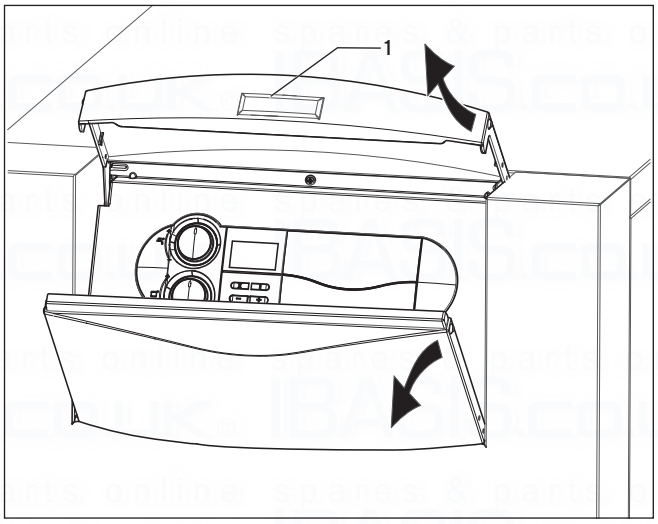

Fig. 5.1 Opening the front flap

To remove the casing, proceed as follows:

- Open the front flap by lifting the silver handle strip (**1**).

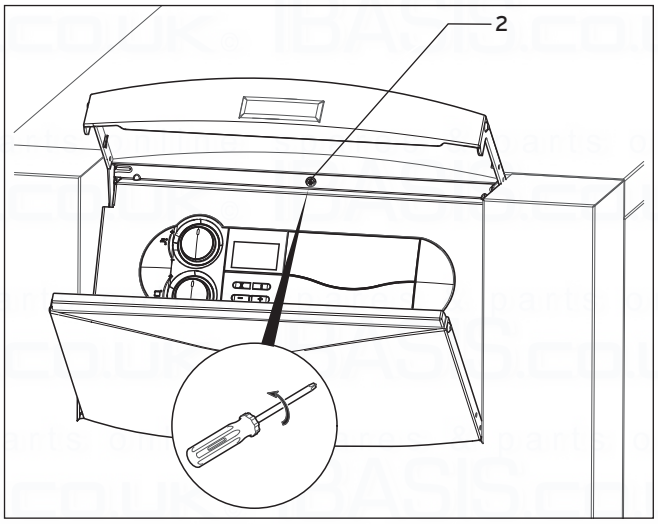

Fig. 5.2 Removing the front casing

- Unscrew the screw (**1**) above the multi-function operating panel.
- Pull the front panel in the upper section towards you.
- Lift the front panel in order to remove it.
- You can now remove the remaining casing sections as required.

5.3 Gas connection

The gas installation may only be carried out by a competent and qualified engineer. The legal directives and any local regulations for gas supply companies must be observed while doing this.
The gas supply line must be constructed in accordance with the Gas Safety (installation and use) Regulations and IGE UP1, IGE UP1A, IGE UP1B and IGE UP2.

Caution!
Leaks!
Make sure that the connection and gas pipes are not under stress when installed to avoid leakage in the heating installation or at the gas connection!

- The cross-sections of the gas pipes should be selected to suit the nominal boiler load.

Caution!
Damage to the gas valve!
The gas valve may be tested for leakage only with a maximum pressure of 110 mbar! The operating pressure must not exceed 60 mbar! If these pressures are exceeded, the gas valve may be damaged.

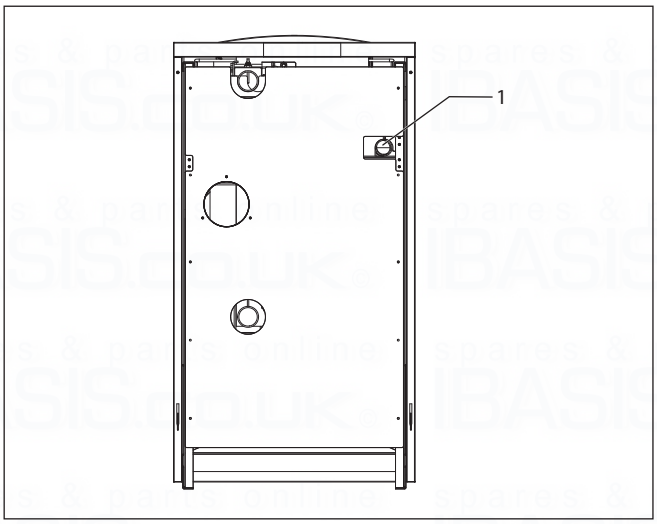

Fig. 5.3 Gas connection (rear of boiler)

- Connect the gas line to the gas connection (**1**) on the boiler.
- Check the gas connection for leaks.

5.4 Heating side connection

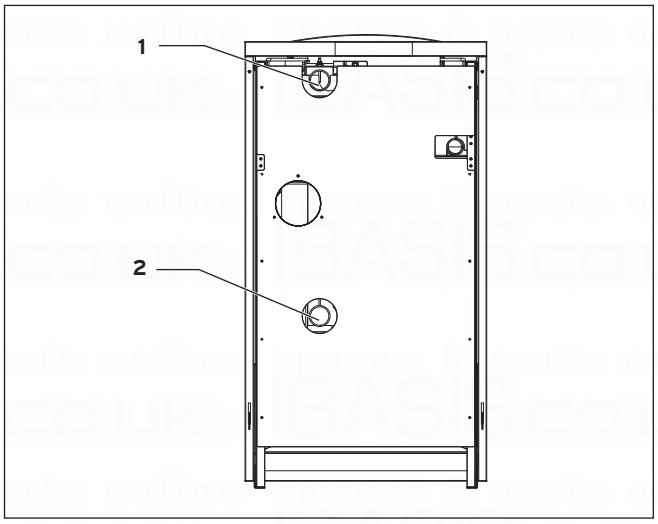

Fig. 5.4 Heating side connection (rear of boiler)

- Connect the heating flow to the heating flow connection (**1**).
- Connect the heating return to the heating return connection (**2**).
- Fit the required isolation valves between the heating installation and the boiler and fit the relevant safety devices and a pressure gauge.

Caution!
If the volume of water circulating falls below the nominal value, the temperature difference will be too great and the burner will start to cycle.
For this reason it is necessary to ensure the water circulation quantities specified in Table 5.1.

The boiler circulation pump is not integrated into the boiler and thus must be fitted within the system.

The following pumps and low loss headers are recommended for use with the respective boilers:

Boiler	Nominal water circulation volume for 20 K difference	Speed regulated high-efficiency pump	3 stage conventional pump	Low loss header
VKK GB 806/3-E-H	3.44	Item no. 0020022253	Item no. 309 442	WH 95 (Item No. 306 721)
VKK GB 1206/3-E-H	4.99	Item no. 0020022253	Item no. 309 442	WH 160 (Item No. 306 726)
VKK GB 1606/3-E-H	6.88	Item no. 0020022253	Item no. 309 442	WH 160 (Item No. 306 726)
VKK GB 2006/3-E-H	8.60	Item no. 0020022254	Item no. 309 443	WH 280 (Item No. 306 725)
VKK GB 2406/3-E-H	10.33	Item no. 0020022254	Item no. 309 443	WH 280 (Item No. 306 725)
VKK GB 2806/3-E-H	12.05	Item no. 0020022255	Item no. 0020016930	WH 280 (Item No. 306 725)

Table 5.1 Application of pumps and low loss headers

5.5 Connecting the DHW cylinder

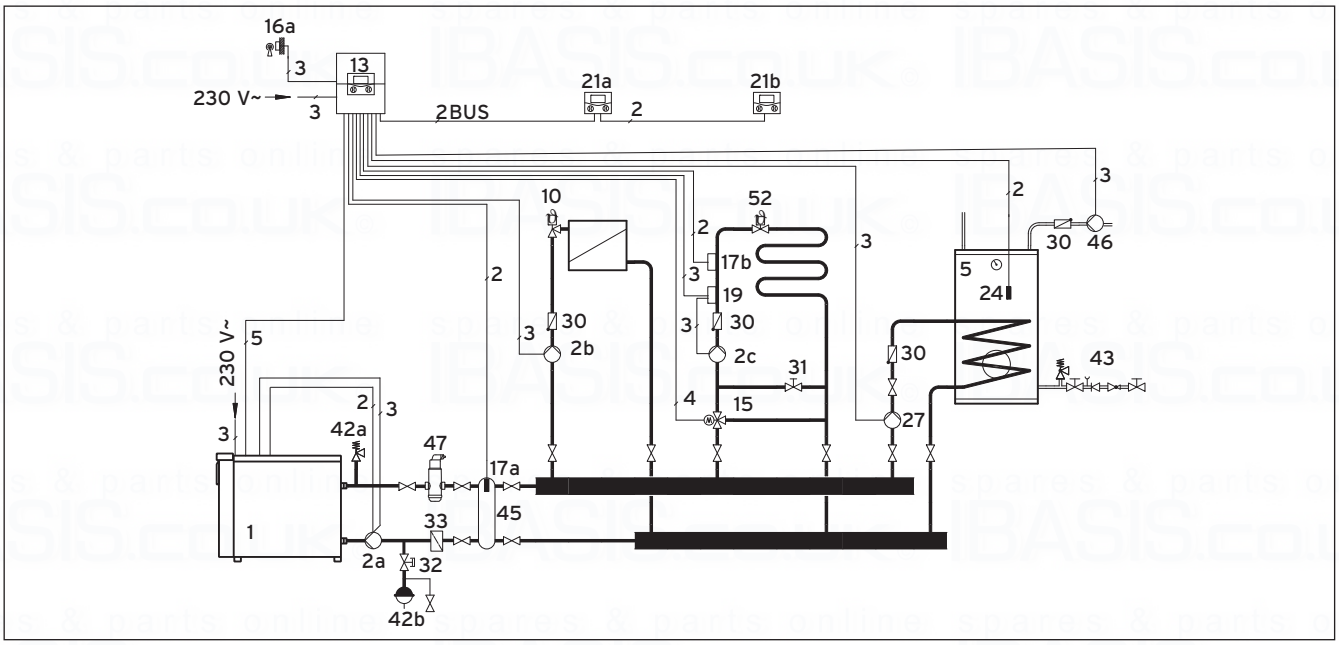

Fig. 5.5 Heating circuit schematic with low loss header

Key

1 ecoCRAFT gas-fired condensing boiler
2a Boiler circulation pump (modulated)
2b Heating circuit pump (mixer circuit 1)
2c Heating circuit pump (mixer circuit 2)
5 Domestic hot water cylinder
10 Radiator thermostat valve
13 VRC 630 weather compensator
15 3-way mixer
16 External sensor
17a Flow temperature sensor (heating circuit 1)
17b Flow temperature sensor (heating circuit 2, mixer circuit)
19 Maximum temperature thermostat
21a Remote control unit VR 80 or VR 90 (radiator circuit)
21b Remote control unit VR 80 or VR 90 (underfloor circuit)
24 Cylinder temperature sensor
27 Cylinder charging pump
30 Non-return valve
31 Regulator valve
32 Cap valve
33 Sludge separator
42a Expansion relief valve
42b Expansion vessel
43 Safety group
45 Low loss header
46 Circulation pump
47 Air separator
52 Room temperature controlled valve

5.6 Air/flue gas installation

In case you use air/flue gas pipes which are licenced to be used together with the boiler, please observe the enclosed installation instructions 0020058722.

In case you use customary air/flue gas pipes, please overserve the following notes:

The flue gas system must be suitable for the flue gas duct of the boiler (e.g. range oftemperature, pressure and leak-tightness). The flue gas duct must be labelled with the CE conformity mark or, if necessary, be certified according to national standards. The instructions of the manufacturer of the flue gas ducts must be observed.

The dimensioning of the flue gas system must be carried out according to EN 13384-1 (EN 13384-1 - Chimneys - Thermal and fluid dynamic calculation methods - Part 2: Chimneys serving one heating appliance). The required device parameters are listed in table 12.1.

Caution!
The diameter of the flue gas pipe must at least be equal to the diameter of the flue gas spigot of the boiler. A reduction is not permitted.

Furthermore the valid type standards concerning flue gas systems must be observed. The respective type standard determines conditions and safety-related requirements concerning the planning, erection and start-up as well as concerning the maintenance of flue gas systems.

5.6.1 Flue gas connection, room-sealed

The combustion air is fed to the boiler via ducting from the outside. The boiler room must be constructed as stated in BS 6644.

5.6.2 Flue gas connection, open flued

Note!
Ensure that the horizontal section of the flue gas pipe is run with a downward slope towards the boiler!

The combustion air is taken from the installation room. The ventilation openings in the installation room must be in accordance with the relevant regulations (condensing boilers Type B).

5.7 Connecting the boiler to the flue gas pipe

Note!
Ensure that the horizontal section of the flue gas pipe is run with a downward slope towards the boiler!

All condensing boilers are fitted with special connection flanges for connecting condensate secure and overpressure leak-tight flue gas pipes.

- For adjusting purposes, the flue pipe must be fitted with a cleaning opening having a diameter of at least 100 mm. It may be necessary to have openings of larger diameter for cleaning the flue pipe, depending upon the diameter of the pipe.

Note!
The user must provide a measurement opening on the customer side of the flue pipe, externally to the boiler casing.

Note!
A condensate trap is fitted to the flue gas connection on the boiler to prevent contaminated condensate from getting into the boiler. The drain of this condensate trap is connected to the siphon on the boiler.

- If required, fit the flue gas line with the flue gas safety temperature limiter which is provided as an accessory. The flue pipe must be approved for use at a temperature of at least 120 °C.

5.8 Condensate discharge

The pH value of the flue gas condensate, which is produced at a rate of max. 1 kg/m^3, is between 3.5 and 4.5. The condensate does not contain any prohibited heavy metal ions.
The boiler is fitted with a condensate collector and a condensate discharge with siphon. The condensate arising from the combustion is either fed directly via the siphon into the drain channel or first neutralised and then fed into the drain.

- Before starting up the boiler, the condensate water syphon should be filled with water.

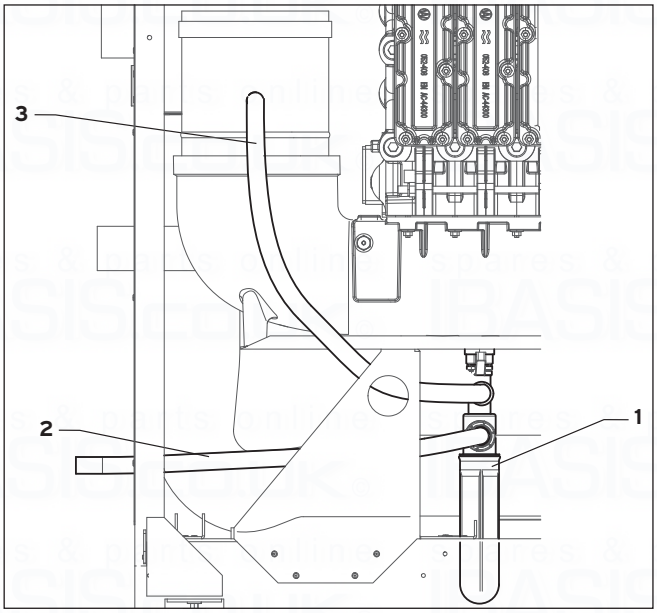

Fig. 5.6 Siphon

Key
1 Siphon
2 Drain hose to the neutralisation box (optional) or to the drain
3 Hose from the condensate trap to the siphon

Danger!
Risk of poisoning from leaking flue gas!
If the device is operated with an empty condensate siphon, there is a risk of poisoning from the escaping flue gases. Be absolutely certain, therefore, to fill the siphon before starting up.

Connecting the condensate drain
The chimney drainage line is run on a slope using suitable plastic or stainless steel piping with a minimum cross-section of DN 20. The condensate water piping to the waste outlet is also installed at an angle using a DN 25 pipe (plastic or stainless steel) and must go to the nearest waste water outlet. The take-off from the boiler is effected by means of a ø 21 mm plastic pipe. The discharge point must remain visible.

Note!
For boilers up to 200 kW:
If required, a neutralisation device with condensate feed pump from the range of Vaillant accessories can be connected.
For boilers above 200 kW:
If required, an in-line neutralisation device from the range of Vaillant accessories can be connected.

5.9 Electrical connection

Danger!
Risk of fatal electric shock from live connections!
The electrical installation must be carried out by an electrical specialist, who is responsible for complying with the existing standards and guidelines. All electrical work must be in accordance with the Electricity at Work Act and BS 7671.

Danger!
Risk of fatal electric shock from live connections!
- **Always switch off the power supply to the appliance first. Only after this can the installation be carried out. Continuous voltage is present on the L and N terminals, even when the main switch is turned off.**

Danger!
Risk of fatal electric shock from live connections!
Mains and low-voltage cables (e.g. sensor wiring) must be run separately from each other. Use the divided cable channel on the left hand side section for this.

Caution!
Access to the main switch (4) (see Fig. 2.2) must be guaranteed at all times and must not be covered or blocked, so that the appliance can be switched off in the event of a malfunction.

To simplify the wiring, the appliance is equipped with System ProE connectors and is ready for connecting. The mains cable and all the other connecting cables (e.g. from the room thermostat) can be connected to the System ProE plugs that have been provided in each case.

Danger!
Danger of death from electric shock!
The fan is connected to a 230 V/50 Hz supply.

The connection should be wired as follows:
- Open the front flap by lifting the silver handle strip.
- Unscrew the screw above the multi-function operating panel.
- Pull the front casing in the upper section towards you and lift it in order to remove it.
- Hinge the electronics box forward.
- Unclip the rear part of the electronics box cover and hinge it upwards.
- Pass the cables through the cable entry in the rear wall of the appliance and through the unit into the electronics box.
- Use the cable channel on the left hand side section for feeding the cable through the unit.

Caution!
Risk of malfunction!
Do not use the same strain relief for the extra low voltage cable as for the mains cable!

- Take care to ensure spatial separation of the mains and extra low voltage cables.
- Secure the cables with the strain reliefs.
- Carefully strip the insulation from the cable ends.
- Then close the rear cover of the electronics box and press it down until it audibly engages.
- Hinge the electronics box up.
- Fasten the front casing.
- Screw the screw above the multi-function operating panel in again.
- Close the front cover.

5.9.1 Connecting the mains cable

The nominal voltage of the mains must be 230 V; if the mains voltage is more than 253 V or below 190 V, functional impairment is possible. The mains feed must be connected via a fixed connection and an isolating device having a minimum contact opening of 3 mm (e.g. fuses, power switches).
- Connect the mains cable to the terminals provided, N, L and PE, in the plug.

Note
Ensure that the boiler room complies wit the requirements of BS 664 and IGE UP10.

5.9.2 Connecting a controller

The Vaillant VRC 630 controller or an externally mounted Vaillant VRC 430 controller must be connected via the "Bus" connection (red plug) in accordance with Fig. 5.8 or Fig. 5.9. The bridge between the terminals 3 and 4 should remain intact (lilac plug).
The sensors and the system components that are not listed in Section 5.10.3 are connected to the controller.
The electrical connection to the Vaillant heating control unit is shown in Fig. 5.7.
Further information can be obtained from the regulator instructions.

5.9.3 Connecting electrical accessories and internal wiring

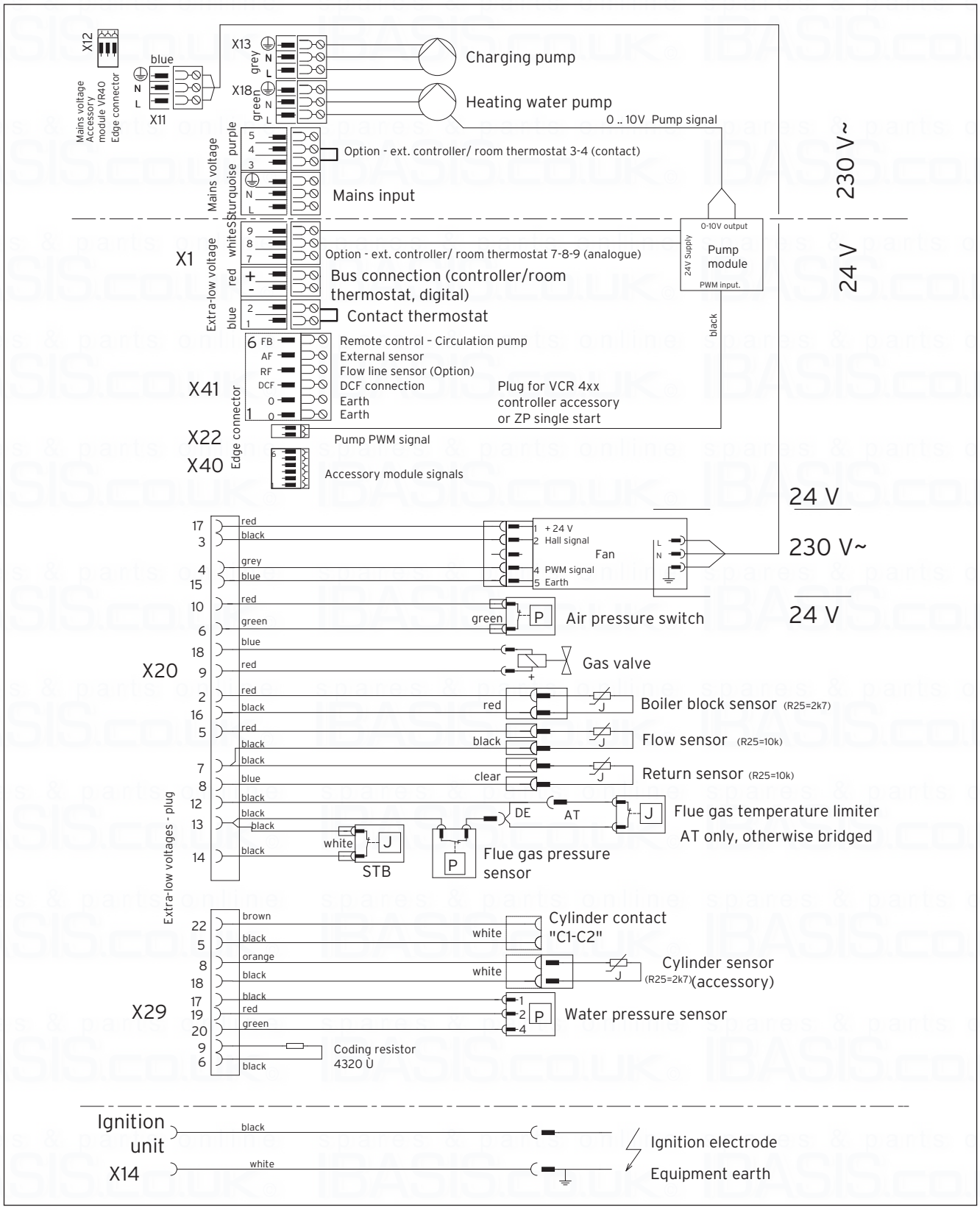

Fig. 5.7 Connecting electrical accessories and internal wiring

Boiler circulation pump, fixed speed

- Connect the boiler circulation pump to the green ProE plug connector on the connection rail.

Boiler circulation pump, modulating

- Connect the boiler circulation pump additionally to the 0-10V adapter box in the unit.

External flow thermostat

A flow thermostat can be electrically incorporated in the safety chain by connecting it to the "contact thermostat" terminals, e.g. for protecting underfloor heating systems.

Flue gas STL

- Connect the flue gas STL in the line to the flue gas pressure cartridge - see the enclosed accessories instructions.

Condensate feed pump

- Connect the alarm output of a condensate feed pump to the "Contact thermostat" plug.

VRC 430, 630 control units

- Connect the 2 wires of the "Bus" connections (red plug) to the connections of the same name in the controller on the VRC 630, or on the VRC 430 if it is mounted externally.
- Alternatively, plug the VRC 430 controller into the boiler operating panel (internal mounting).

Note!
If several contacts are to be connected to the "Contact thermostat" connection, They must be connected in series, not in parallel!

Connecting a VRC 430 control unit (controller outside the electronics box)

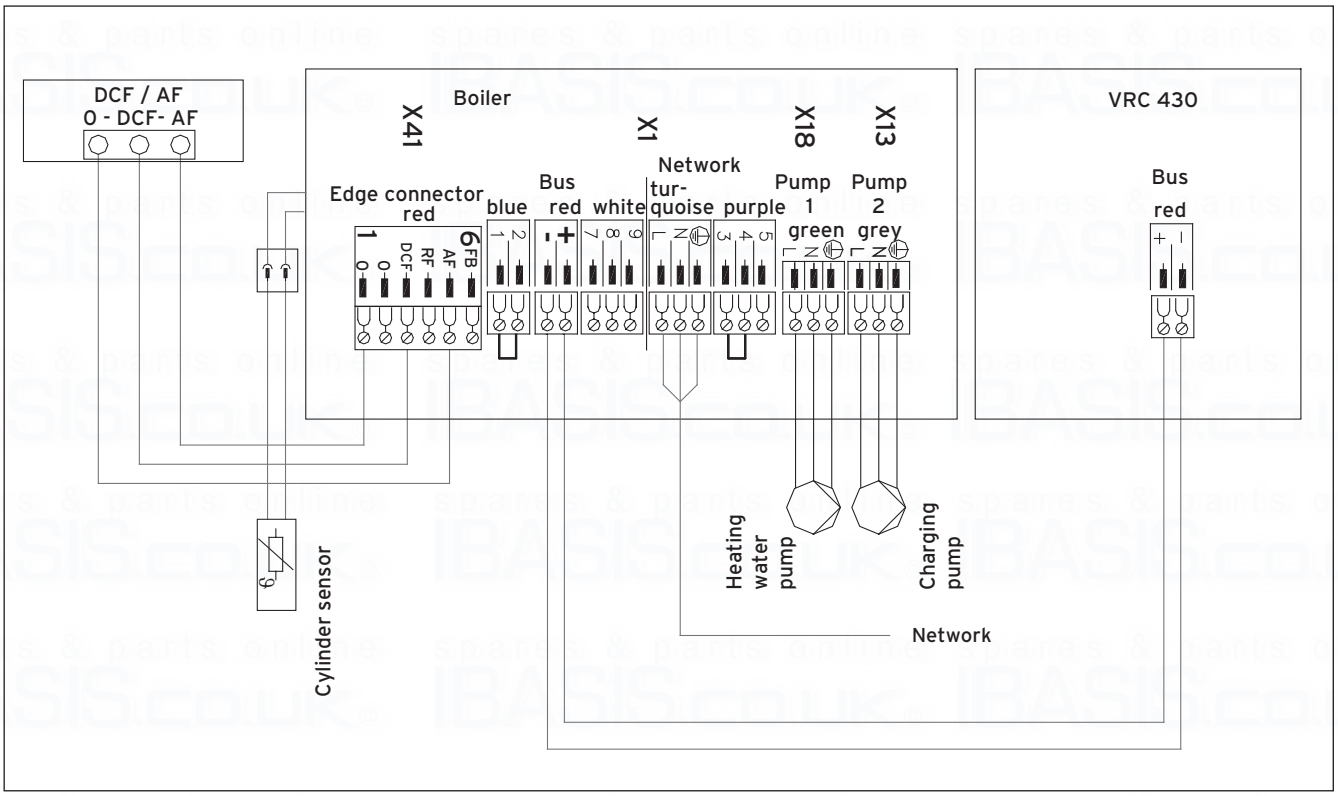

Fig. 5.8 Connecting a VRC 430 control unit

Connecting a VRC 630 control unit (controller outside the electronics box)

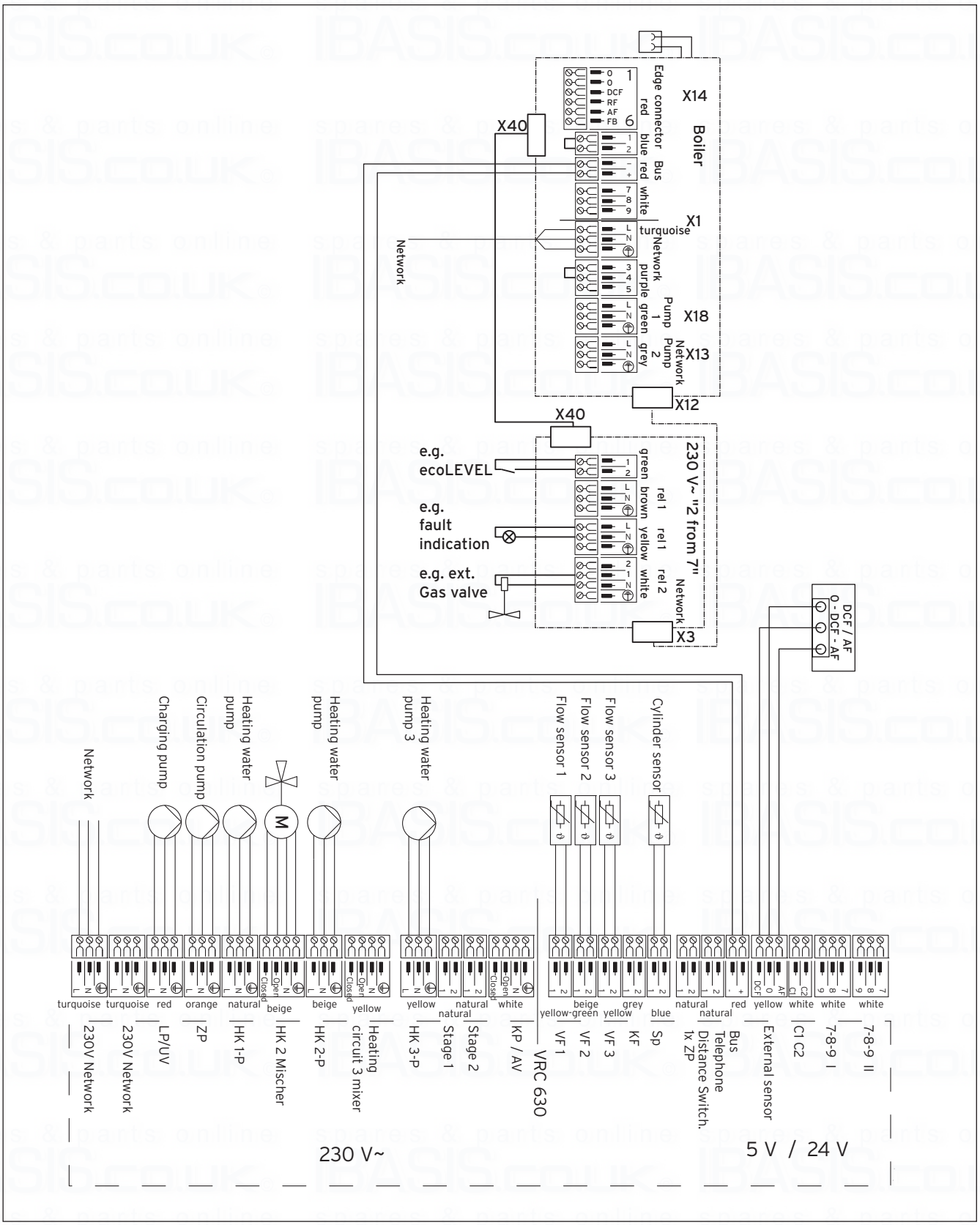

Fig. 5.9 Connecting a VRC 630 control unit

6 Start-up

Initial start-up and operation of the appliance, and instruction for the user, must be performed by a heating engineer. For subsequent installation/operation instructions, see the relevant section of the operating manual.

Caution!
Before start-up, and after inspection, maintenance and repair work, the gas unit must be checked for leaks!

The operation of the boiler and the setting of various parameters or operating conditions is effected via the operating section on the boiler connector block.
The Installer level with parameters and system-related settings can be accessed after entering the service code.

6.1 Entering the service code

Note
The Installer level is automatically exited after 15 minutes.
Each time the service code is entered this causes a further extension of 15 minutes.

To enter the service code, proceed as follows:
- Activate the diagnostic mode by pressing the "i" and "+" buttons simultaneously.
- Select diagnostic point 97; press "i".
- Set the value 17.
- Store this value by keeping the "i" button pressed for 5 seconds (until the flashing stops).

6.2 Start-up checklist

Proceed in accordance with the following checklist during start-up. A description of the individual steps can be obtained from the following sections.

The casing must be removed from the boiler before start-up.
- To do this, unscrew the screw above the multi-function operating panel.
- Pull the casing top forward.
- Lastly, remove the side sections.

No.	Procedure	Remarks	Tools required
1	Check the gas connection pressure	Minimum inlet working pressure is not less than 17 mbar	U-tube or digital pressure gauge
2	Check whether syphon is full	If necessary fill via flue gas analysis point	
3	Check electrical connection rail	Mains connection: L,N, PE terminals Controller terminals: "Bus", /7-8-9 or 3-4	
4	Switch unit on, display active	Otherwise check fuses	
6	Activate chimney sweep function	Press "+" and "-" buttons simultaneously	
7	Check the entire gas route for leaks	Leak seeking spray or a gas sensing instrument is recommended (especially for checking the burner gaskets for leaks). If necessary tighten the burner gasket to 12 Nm).	Gas sensing equipment
8	Measuring the flue draught	The maximum draught must not exceed 20 mbar. If the draught is too great the flue draught must be reduced by suitable measures.	Measuring unit for flue draught
9	CO_2 measurement	Target value: at rated load: 9.3 % Vol. (±0.2 % Vol.) at minimum load: 9.0 %Vol. (±0.2 % Vol.)	CO_2-measuring instrument
10	If CO_2 not within tolerance:	Adjust CO_2, see Section 6.5.3	
11	After setting gas ratio, activate chimney sweep function then perform repeat CO_2 measurement	Target value: at rated load: 9.3 % Vol. (±0.2 % Vol.) at minimum load: 9.0 % Vol. (±0.2 % Vol.)	CO_2-measuring instrument
12	CO measurement (target< 80 ppm)		CO measuring instrument
13	Check condensate trough, syphon and condensate drain for leaks	Visual check or additional check of each seal position with CO-measuring instruments	
14	Switch boiler off and on again	Safe exit from the Test Mode and Reset	
15	Programme heating regulator with customer and check user water/heating	Hand the operating instructions for the regulator to the customer	
16	Affix sticker 835593 "Read Operating Instructions" in user's language to the front of the unit		

Table 6.1 Start-up checklist

6.3 Function menu (for maintenance and service work)

The function menu allows the technician to perform functional checks on individual actuators. It can always be started after a "**RESET**" or a "**Mains ON**". After a wait of approx. five seconds or if the "**-**" button is pressed, the unit's electronics switch to normal operation.

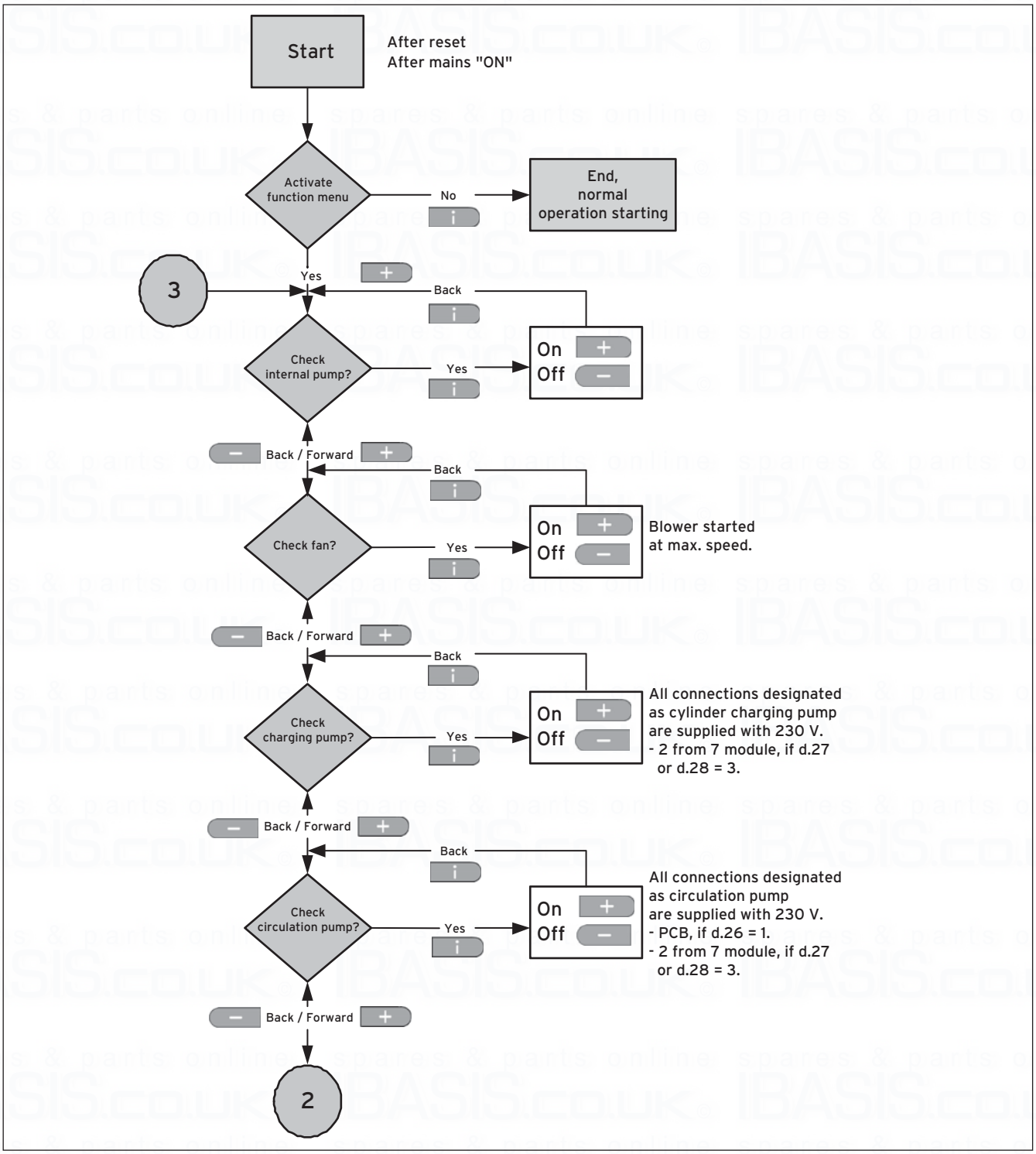

Fig. 6.1 Function menu (continued on next page)

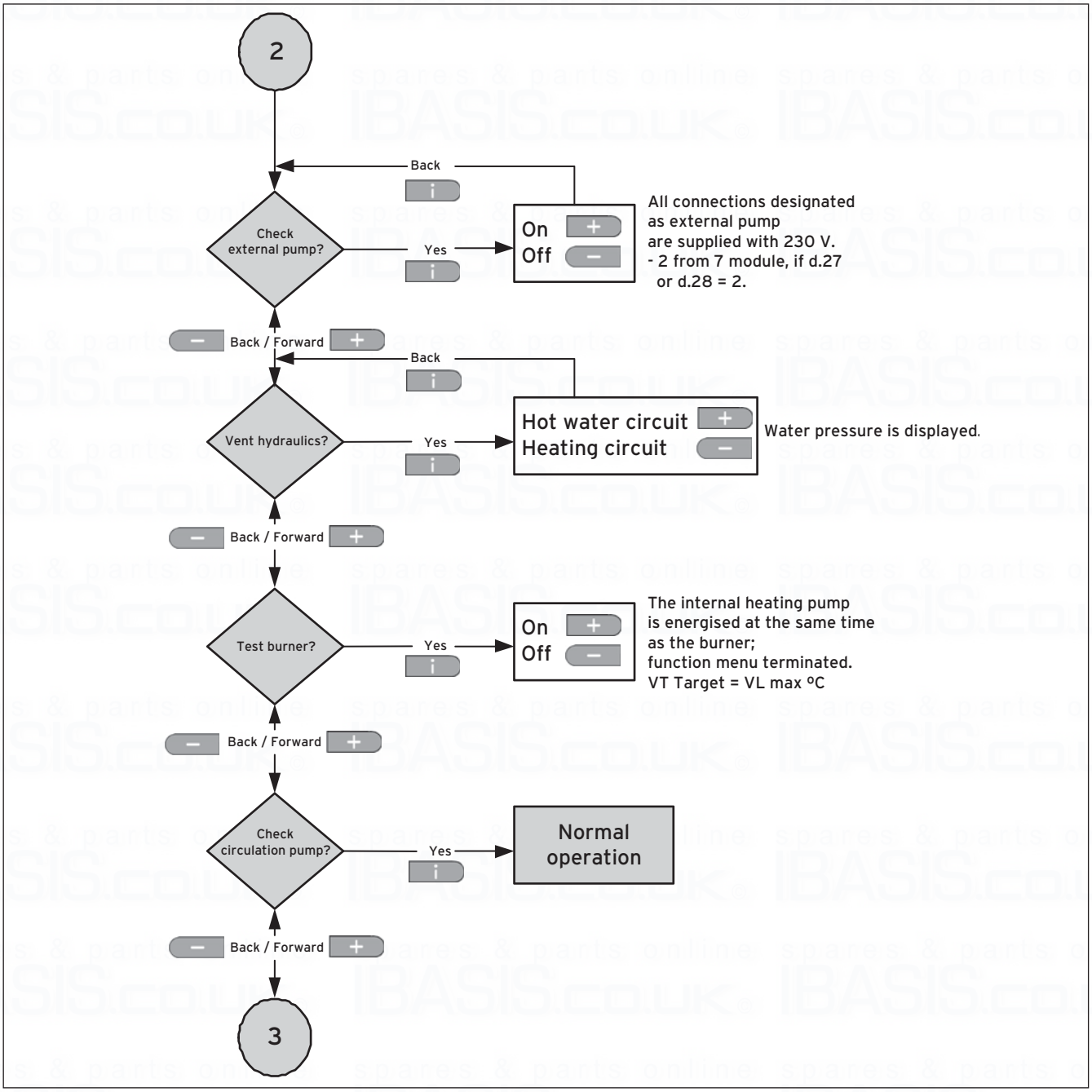

Fig. 6.1 Function menu (continued)

6.4 Filling the system

- Flush the entire heating system thoroughly before filling.

Corrosion protection by water treatment

In the case of heating water that has been conditioned by the addition of strongly alkaline substances, aluminium and its alloys are at risk from corrosion.
The pH of the heating water must not exceed a value of **8.5**.

6.4.1 Filling the heating side

- Release the cap on the customer side automatic air vent by one or two turns. Make sure that the opening of the cap does not point towards the electronic components.
- Fill the installation up to a system pressure of 2.3 to 2.5 bar. The current water pressure will be displayed if the "-" button is pressed for approx. 3 seconds.
- Fill the installation via the boiler filling and draining device provided on the installation.
- Close the bleed nipple.
- Bleed the radiators.
- Read the pressure again on the pressure gauge. If the installation pressure has fallen, the installation should be filled up again and vented once again.
- Check all connections and the entire system for leaks.

You can use the P0 test program to bleed the heating circuit, the boiler and, if necessary, the cylinder.

- To do this, keep the "+" button pressed for approx 5 seconds while switching on the mains.
- Select P0 with the "+" or "-" buttons.
- Start the program with the "i" button.
- Step forward to the cylinder charging circuit by pressing again.

6.4.2 Filling the siphon

- Fill the siphon with water through the opening in the flue gas collector.

Danger!
Risk of poisoning from leaking flue gas!
If the device is operated with an empty condensate siphon, there is a risk of poisoning from the escaping flue gases. Be absolutely certain, therefore, to fill the siphon before starting up.

6.5 Checking the gas setting

The unit is set to the values quoted in Chapter 12 "Specifications" in the factory. In some areas these settings may need to be adjusted at the installation site.
To ensure proper functioning of the combined gas/air controller, the O_2-/CO_2 concentration in the flue gas (see Section 6.5.2) and also the gas pressure ahead of the gas valve (see Section 6.5.1) must be measured.
The checking and setting is carried out at both the rated and the minimum loading.

Caution!
Before start-up of the unit compare the details concerning the set type of gas on the identification plate with the type of gas supply at the installation site.
It is not necessary to check the quantity of gas. The adjustment takes place on the basis of the CO_2 component in the flue gas.

The appliances are delivered as Natural Gas G20 variants.

6.5.1 Checking the connection pressure (Gas flow pressure)

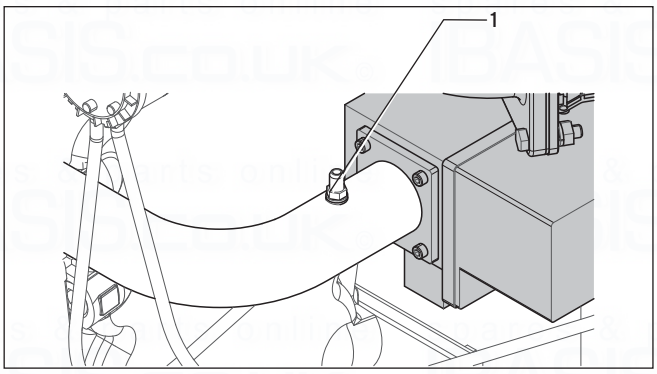

Fig. 6.2 Checking the gas flow pressure

Key
1 Pressure measurement nipple

Proceed as follows to check the connection pressure:
- Remove the unit's front casing.
- Lift the front cover.
- Unfasten the screw on the pressure measurement nipple (**1**) ahead of the gas valve.
- Connect a pressure gauge.
- Start up the unit.
- Switch the unit to maximum output in Test Mode; select "Chimney sweep" operating state by pressing "**+**" and "**-**" simultaneously.
- Measure the connection pressure in comparison with atmospheric pressure. The measured pressure must be not less than 17mbar.

Caution!
If the connection pressure (gas flow pressure) is not less than 17mbar, no adjustment should be undertaken, and the unit must not be started up!

In this case proceed as follows:
- Take the appliance out of operation.
- Remove the pressure gauge and tighten the screw on the pressure measuring nipple (**1**) again.

If you cannot rectify the fault, do not start up the unit and inform the gas supply company.

Caution!
Malfunction!
The combustion air must be free of particles or the burner can be contaminated with dirt.
Take particular care that no building dust or fibres of insulating material are present in the combustion air.

6.5.2 Checking the CO_2 content

The opening for the CO_2 measurement must be made in the customer side of the flue pipe.

Caution!
Risk of measurement errors caused by the ingress of leakage air!
Make sure that the opening for the measuring probe is well sealed during the measurement to prevent the ingress of leakage air!

Note!
The maximum draught must not exceed 20 mbar, as otherwise the results of the CO_2 measurement will be invalid. If necessary you can remove the cover of the inspection opening in the external flue gas ducting during the measurement and then replace it after the measurement.

Note!
Note regarding the test programs:
The Test Mode is automatically exited after 15 minutes. If you have not been able to complete the measurement in this time period, the Test Mode must be re-activated.

Testing at rated load
- Start the "**P1**" test program for rated output.
- Press and hold the "**+**" button.
- Press the "Fault resolution" button.
- Hold the "**+**" button until "**P0**" appears.
- Switch to "**P1**" with the "**+**" button.
- Start the test program by pressing the "**i**" button.

After a stabilising period of one minute, the boiler is run at its rated output.

- Measure the CO_2 content in the flue gas.

VKK GB xx6/3-E-H	% CO_2 at rated load	% CO_2 at minimum load
G20 20 mbar	9.3 ± 0.2	9.0 ± 0.2

Table 6.2 CO_2 target values for rated and minimum load

No further adjustment is required if the measurement corresponds with the relevant value in the table. If the measured CO_2 content lies outside this range, adjustment of the gas/air mixture is required.

Testing at minimum load
- Start the test program "**P2**" for minimum load (as described above).
- Measuring the CO_2 content in the flue gas.

No further adjustment is required if the measurement corresponds with the relevant value in the table (see Table 6.2). If the measured CO_2 content lies outside this range, adjustment of the gas/air mixture is required.

To end the test, proceed as follows:
- Turn the boiler off.
- Close the measurement opening and the pressure measuring nipple.
- Check them for leaks.

6.5.3 Setting the CO_2 content

Gas/air mixture adjustment
The gas ratio setting must be carried out in the sequence given. The gas/air mixture is factory set for natural gas E (G20).

Note!
The Test Mode is automatically exited after 15 minutes. If you have not been able to complete the measurement in this time period, the Test Mode must be re-activated.

Note!
The maximum draught must not exceed 20 mbar, as otherwise the results of the CO_2 measurement will be invalid. If necessary you can remove the cover of the inspection opening in the external flue gas ducting during the measurement and then replace it after the measurement.

CO_2 adjustment at rated load
The gas ratio setting for the rated load is made by means of the gas flow rate screw (**1**), using an Allen key from the gas valve. You will find a 3 mm Allen key under the cover.

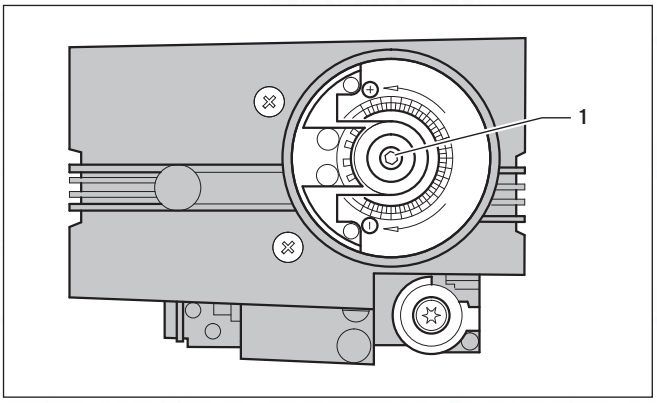

Fig. 6.3 Gas flow rate screw

- Pass the measuring probe for the flue gas measuring instrument into the measurement opening.
- Remove the cover cap from the gas valve.

Proceed as follows to start test program "**P1**" for the rated load:
- Press and hold the "**+**" button.
- Press the "Fault resolution" button.
- Hold the "**+**" button until "**PO**" appears.
- Switch to "**P1**" with the "**+**" button.
- Start the test program by pressing the "**i**" button.

After a stabilising period of one minute, the boiler is run at its rated output.

- Determine the CO_2 content at full load and compare this value with the values in Table 6.2.
- If necessary, correct the CO_2 content with the gas flow rate screw (**1**) according to Table 6.2, using a 3 mm Allen key.
- To reduce the CO_2 content, turn the Allen key in a clockwise direction (right).
- To increase the CO_2 content, turn the Allen key in an anti-clockwise direction (left).

Note!
Adjust only in increments of 1/8 turn and wait approx. 1 minute after each adjustment until the value stabilises.

After the adjustment, check the quality of combustion through the display opening:
– no lifting of the flame evident
– no glowing of the burner surface

- Terminate the "**P1**" test program.
- Fit the cover cap on the gas valve.

Adjustment at minimum load

Note!
Before making any adjustment, first perform a CO_2 measurement, as the adjustment at the rated load also changes the minimum load accordingly. An adjustment of the minimum load is only required in exceptional cases

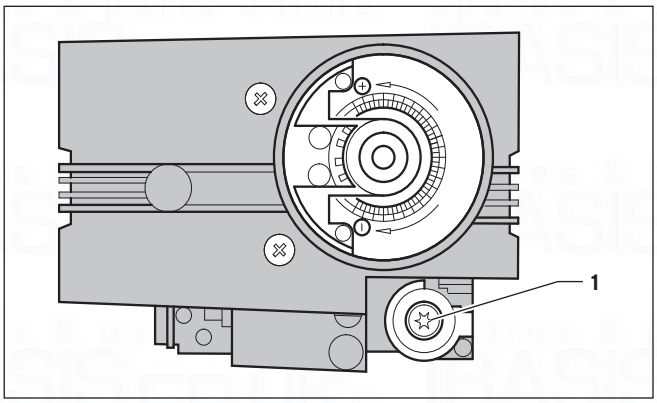

Fig. 6.4 Zero point screw

The gas ratio setting for minimum load is made by means of the zero point screw (**1**) (Torx Tx40 under the cover) on the gas valve.

- Remove the cover cap for the zero point screw (**1**) on the gas valve.
- Start the test program "**P2**" for minimum load (as described above).
- Determine the CO_2 content at minimum load and compare this value with the values in Table 6.2.
- If necessary, correct the CO_2 content with the zero point screw on the gas combination valve according to Table 6.2 using a Torx Tx40 driver.

Note!
The adjustment is very sensitive. A half turn (180°) produces a change in CO_2 concentration of approx. 1.0 %Vol.

Note!
Adjust only in increments of 1/8 turn and wait approx. 1 minute after each adjustment until the value stabilises.

- To increase the CO_2 content, turn the zero point screw in a clockwise direction (right).
- To reduce the CO_2 content, turn the zero point screw in an anti-clockwise direction (left).

After the adjustment, check the quality of combustion through the display opening:
– no lifting of the flame evident
– no glowing of the burner surface

- Terminate the "**P2**" test program.
- Fit the cover cap on the gas valve.

6.6 Checking the appliance function

After installation and setting the gas ratio, perform a functional check before commissioning the appliance and handing it over to the user.

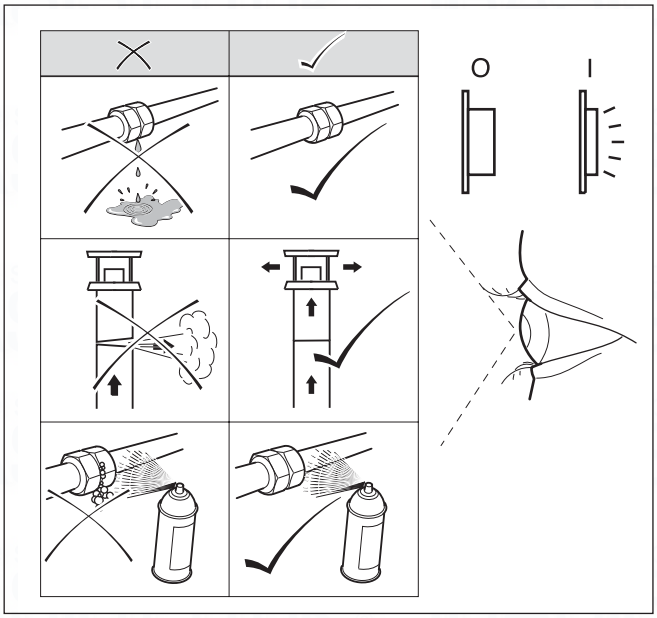

Fig. 6.5 Visual inspection of the appliance and the system

- Start up the appliance in accordance with the instructions in the relevant operating manual.
- In particular, check the burner gasket for leaks using a CO_2 measuring instrument. If necessary tighten the burner gasket to 12 Nm.
- Check the gas infeed, flue gas installation, boiler and heating installation and the hot water pipes for leaks.
- Check the correct fitting of the flue gas accessories.
- Check the burner flame for regularity.
- Check the heating and hot water function.
- Hand the unit over to the user.

6.7 Instructing the user

Caution!
The unit may only be operated
- for start-up
- for test purposes
- for continuous operation
with the air/flue gas system fully assembled and enclosed.

The user of the appliance must be trained in the handling and function of his Vaillant VKK GB 806/3 - 2806/3-E-H
gas-fired condensing boiler.

- Hand over any instruction manuals intended for the user, as well as the appliance documents for safe keeping.
- Go through the operating manual with the owner and answer any questions.
- Draw special attention to the safety instructions which the owner must follow.
- Point out to the owner the need for regular inspection and maintenance of the system (inspection/maintenance contract).
- Bring it to the operator's attention that the manuals should remain in the vicinity of the Vaillant VKK GB 806/3 -2806/3-E-H gas-fired condensing boiler.
- Instruct the user about measures taken to ensure the supply of combustion air and removal of flue gas. In particular, point out that these measures must not be altered.
- Explain to the operator how to check the water level/filling pressure of the system and show the operator how to refill and bleed the heating system when the need arises.
- Show the user the correct (economical) temperature, controller and thermostat valve settings.

Note
When you have finished the installation, attach the sticker supplied (835593) in the user's language to the front of the appliance.

7 Adapting the unit to the heating system

The adaptation of the boiler to the heating installation is carried out in the Diagnostic Mode. The operating concept for the selection of the various parameters and their setting is shown in Section 6.2. Some settings are only intended for the heating engineer and can only be called up after service code "17" has been entered at diagnostic point 97.
An overview of the diagnostic points that can be set can be found in Table 7.1.

Diagnostic point	Description	Setting range	Default setting
d. 0	Heating minimum load	Settable values in kW	Maximum output in heating mode
d. 1	Water pump overrun time for heating mode	2 - 60 min	5 mins
d. 2	Maximum burner block time at 20 °C	2 - 60 min	20 min
d.17	Changeover from flow temperature regulation	0 = flow temperature regulation 1 = return temperature regulation (e.g. for underfloor heating)	0
d.18	Pump run-on mode	1 = comfort 3 = eco	1 = comfort
d.20	Maximum setting value of cylinder target temp. potentiometer	50 °C - 70 °C	65 °C
d.27	Switching of accessory relay 1 on the VR40 accessory	1 = circulation pump 2 = ext. pump 3 = cylinder charging pump 4 = flue non-return valve/ extractor hood 5 = external gas valve 6 = External error message	1 = circulation pump
d.28	Switching of accessory relay 2 on the VR40 accessory	1 = circulation pump 2 = ext.pump 3 = cylinder charging pump 4 = flue non-return valve/ extractor hood 5 = external gas valve 6 = External error message	2 = ext.pump
d.54	Switch-on hysteresis relative to the current target value	0...-10 K	-2 K
d.55	Switch-off hysteresis	0 ... 10 K	6 K
d.71	Maximum target value that can be set for the heating flow temperature	40 °C - 85 °C	75 °C
d.72	Pump overrun after charging of a consumption water storage tank controlled by the electronics (also warm start and charging via C1/C2)	0 - 600 s	300 s
d.75	Maximum charging time for a storage without own controller	20 - 90 min	45 mins
d.77	Cylinder minimum load (cylinder charging output limiting) in kW	Settable values in kW	max. output
d.78	Cylinder charging temperature limiting (flow target temperature in cylinder charging mode) in °C	75 °C - 85 °C	80 °C
d.84	Number of hours until the next maintenance activity (entry of operating hours until the maintenance alert appears in the display)	0 ... 3000 operating hours "-" for off	"-" for off
d.87	Gas type setting	0 = natural gas 20 mbar	0
d.98	Option to enter telephone number that is displayed with a maintenance alert		
d.99	Selection of display language		English

Table 7.1 Settable diagnostic points

7.1 Setting the maximum boiler flow temperature

The maximum boiler flow temperature for heating mode can be set at diagnostic point d.71, and for cylinder charging mode at d.78 (see Table 9.2).

7.2 Setting pump overrun time

The overrun time of the boiler circulation pump can be set at diagnostic point d.1. The overrun time for a cylinder charging pump directly connected to the boiler can be set under Parameter d.72 if necessary. However if the cylinder charging pump is connected to a VRC 630, the setting must be carried out there (see Table 7.1).

7.3 Blocking time and heating partial load

The maximum burner anti-cycling time in heating mode can be set at d.2, the heating partial load at d.0 and the cylinder charging minimum load at d.77 (see Table 9.2).

7.4 Start-up behaviour

When there is a heat requirement, the boiler goes to Status "S.2" (pump pre-run)for approx. 15 seconds and then the fan is started ("S.3").
After the pressure cartridge is switched in and the start speed has been reached, the gas valve is opened and the burner started (Status "S.4").
The boiler is now operated for 60 seconds at minimum output and then, depending on the deviation from the target value, the calculated target value for the speed is set.

8 Maintenance

8.1 General notes

Permanent operational readiness, safety, reliability and a long service life require inspections and maintenance work to be carried out regularly every year by a heating engineer. We recommend making a maintenance agreement.

Danger!
Inspection, maintenance and repair work should only be undertaken by an approved heating installation company.
Inspections/Maintenance work not carried out can result in damage to property and personal injury.

To ensure all the functions of your Vaillant appliance on a continuing basis and in order not to change the approved original condition, only original Vaillant replacement parts may be used for service and maintenance work!
Any replacement parts which might be required are listed in the relevant current replacement part catalogues. Information can be obtained from Vaillant Customer Service Centres.

8.2 Safety instructions

Always perform the following steps prior to inspection work:

Note!
If inspection and maintenance work is necessary with the mains switch on, this is indicated in the description of the maintenance work.

- Switch off the mains switch.
- Close the gas isolator valve.
- Close the heating flow and return.

Danger!
Danger of death from electric shock!
The supply terminals of the device are under voltage even if the main switch is off. Before working on the appliance, turn off the power supply and secure it against being switched on again!

8.3 Operating hours indication

The burner operating hours are displayed here:
- Diagnostic point d.81 for cylinder charging mode
- Diagnostic point d.82 for heating mode

8.4 Chimney sweeper operation

For the emissions measurement by the chimney sweep, and for other measurements, it may be necessary to run the boiler at maximum output for an extended period of time. For this reason there is a chimney sweep operation mode.
- To this end, press the "**-**" and "**+**" buttons simultaneously.

The boiler will now run at maximum capacity for 15 minutes.
By pressing "**+**" and "**-**" simultaneously once more, the function can be terminated before this time has expired. The function is automatically terminated after a flow temperature of 85 °C has been reached (overtemperature protection).

8.5 Maintenance checklist

In the framework of the inspection work, check the points listed here and perform the relevant maintenance work in accordance with the following chapters if necessary.
The casing must be removed from the boiler before any maintenance work.
- To do this, unscrew the screw above the multi-function operating panel.
- Pull off the front cover.
- Remove the top and side sections as required.

No.	Procedure	Remarks	Tools
1	Check the filling pressure of the heating system (button "-")	Top up if necessary (approx. 2.5 bar)	
2	Visual check for leaks in heating circuit	Check function of quick vent system	
3	Visual check of safety valve	In accordance with BS 6644	
4	Check condensate collector, siphon, supply air and flue gas paths for contamination and leaks. Check gaskets of the condensate trough, the inspection opening and between the flue gas flange and the heat exchanger for damage and replace if necessary.	See: 8.5 and 8.6	
5	Switch on the appliance - call up test program	P1 = rated load, P2 = minimum load	
6	CO_2 measurement (target value: at rated load: 9.3 % Vol. (±0.2 % Vol.) at minimum load: 9.0 % Vol. (±0.2 5 Vol.) CO measurement (target value < 80 ppm)	If the values are not within this range, you need to perform a CO_2 adjustment before the inspection can continue (see: 6.4.3)	CO_2-measuring instrument
7	Capacity measurement	Gas rate check If the capacity is more than 15 % below the nominal value, then the burners must be cleaned or replaced Every time the burner is dismantled, replace the gaskets and tighten the burner flange to 12 Nm on the diagonal. After cleaning or replacing the burner, a new measurement of the CO_2 value and the loading is required. If necessary, the CO_2 value will have to be re-set. Check for gas leaks behind the fan and along all the burner gaskets with gas sensing equipment.	Gas sensing equipment
8	Check flue gas pressure monitor, visual check of all tubes and measuring nipples, functional check by flue gas full block with flue gas baffle or similar equipment	At nominal capacity and full blockage the burner must go out after latest two minutes, and then thereafter continuous automatic re-starting. No flue gas should escape to the installation room through the syphon.	
9	Check syphon and condensate drain for leaks		
10	Check flue gas piping for leaks	Visual check of connection and fixing fittings. No condensate should drip out of the connection points, pipes have a gradient of > 3° in the direction of the boiler.	
11	Replace casing components, fully assemble boiler		
12	Unit off - switch unit on - check function of regulator (hot water/heating)		

Table 8.1 Inspection Checklist

8.6 Cleaning the condensate collector

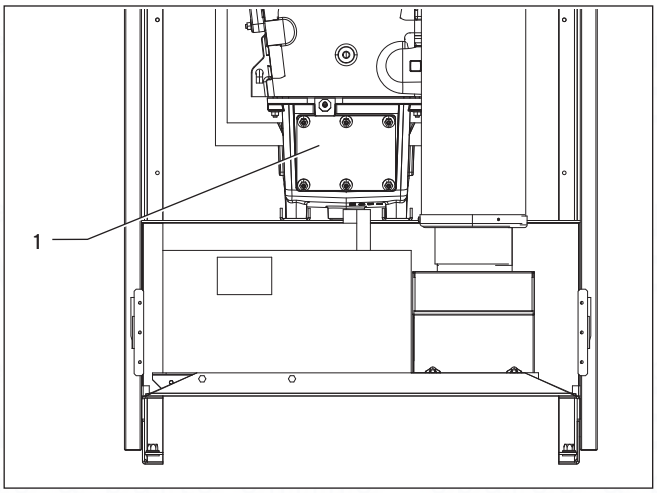

Fig. 8.1 Cleaning the condensate collector

- Remove the front section of the boiler casing.
- Remove the cover on the inspection opening (**1**).
- Check the water condensate collector for dirt contamination and clean if required with a scraper.
- Check the gasket on the inspection opening for damage before re-assembly. If required, a new gasket should be fitted.

8.7 Cleaning the siphon

- Remove the boiler casing.

Note
Condensate can escape while the drain hoses are being pulled off.

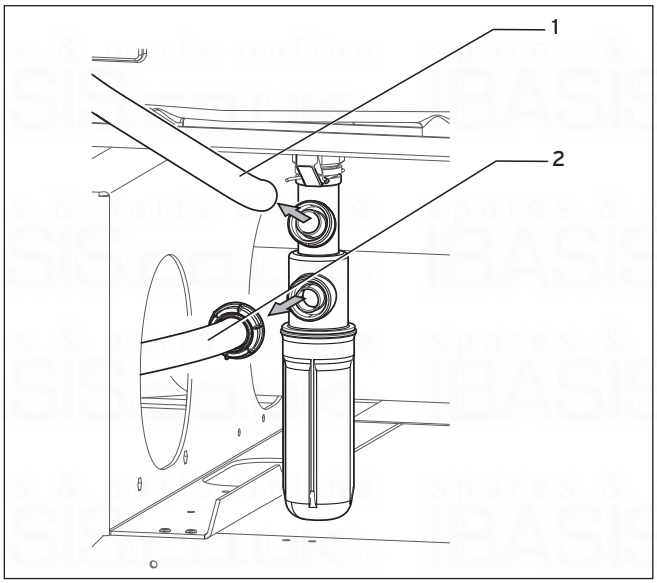

Fig. 8.2 Removing the hoses

- Unfasten the hoses (**1**) and (**2**).

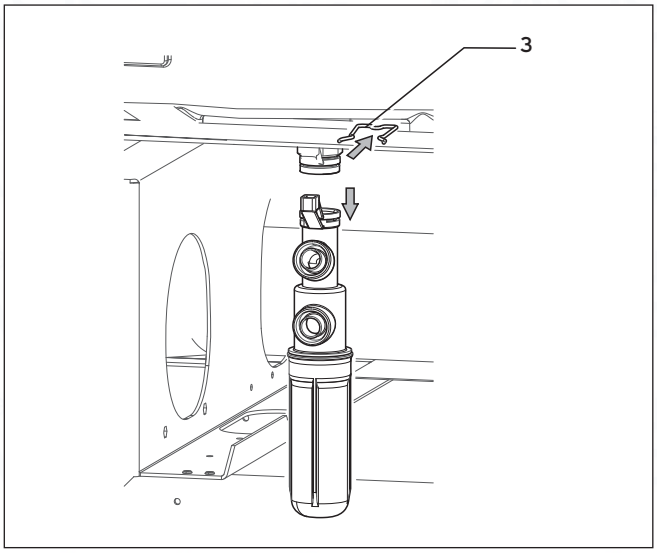

Fig. 8.3 Pulling off the clip

- Pull off the clip (**3**).
- Remove the siphon and clean it.
- Fit the siphon in reverse sequence.
- Unscrew the plug from the flue gas measurement opening and fill the siphon with water through this opening.
- Close the opening on the flue gas connection with the plug.

8.8 Checking the flue gas pressure monitor

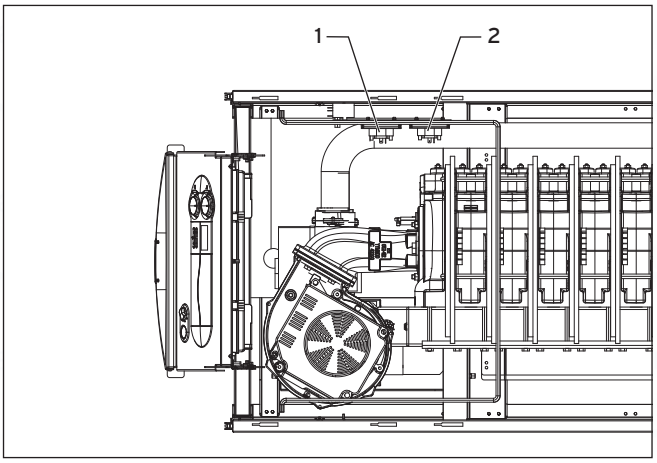

Fig. 8.4 Checking the flue gas pressure monitor

- Check the hose to the flue gas pressure monitor (**2**) for contamination and correct fit.

Caution!
The hose must be connected to the connection marked "P1" on the flue gas pressure monitor.

8.9 Checking the combustion air pressure monitor

- Check the hoses to the combustion air pressure monitor (**1**) (see Fig. 8.4) for contamination and correct fit.

Caution!
The connection marked "P1" on the combustion air pressure monitor must be connected to the Venturi. The connection marked "P2" on the combustion air pressure monitor must be connected between the gas valve and the Venturi.

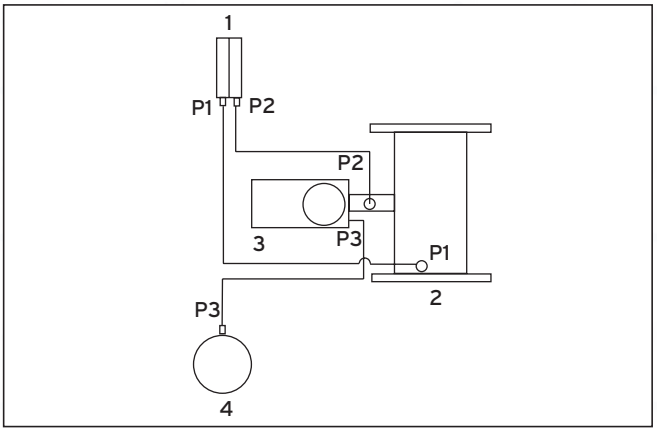

Fig. 8.5 Connecting the combustion air pressure monitor

Key
1 Combustion air pressure monitor
2 Venturi
3 Gas valve
4 Supply air box

8.10 Cleaning the burner

If cleaning of the burner is necessary, the complete burner/fan unit must be dismantled.

Danger!
Danger of personal injury and material damage! Shut off the gas supply before dismantling the burner, as otherwise gas can escape without control.

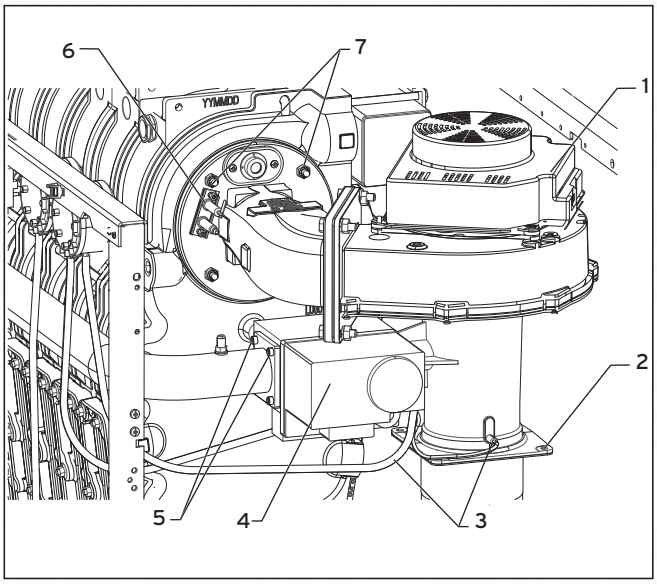

Fig. 8.6 Dismantling the burner

- Remove the front casing.
- Hinge the electronic box down.
- Unfasten the connections on the gas valve (**4**) and on the fan (**1**).
- Unfasten the plug on the ignition electrode and the earth cable (**6**).
- Unfasten the control hoses (**3**) on the gas valve and on the Venturi.
- Unfasten the four screws between the Venturi and the supply air silencer or HT pipe (**2**).
- Lay the supply air silencer with 87° HT elbow carefully to one side.
- Unfasten the four M5 screws (**5**) on the gas pipe (gas filter)/gas valve.
- Unfasten the four M8 nuts (**7**) on the heat exchanger.
- Withdraw the entire unit, consisting of manifold flange, fan, Venturi and gas valve, to the front and lay it carefully to one side.
- Remove the gasket between the heat exchanger and the manifold flange.
- Carefully withdraw the burner to the front.

Caution!
Risk of damage to the burner surface!
Take care that the burner surface does not get damaged during cleaning!

- Blow out the burner with compressed air outside the installation room from the slot plate towards the metal fleece. If the burner is heavily contaminated it must be replaced.
- Re-assemble all the components in reverse order.

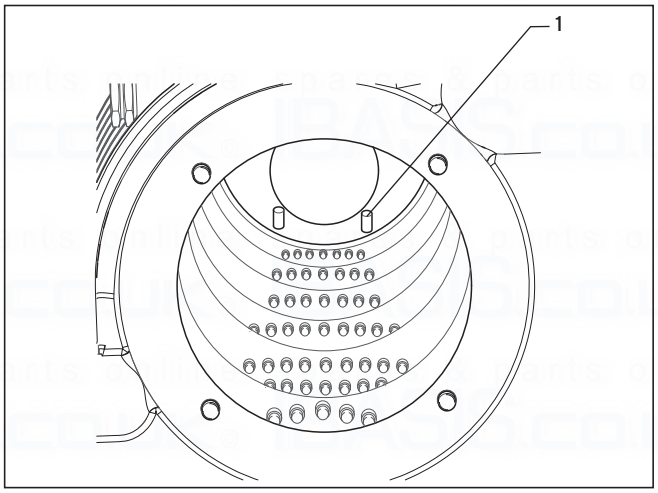

Fig. 8.7 Burner guide slots

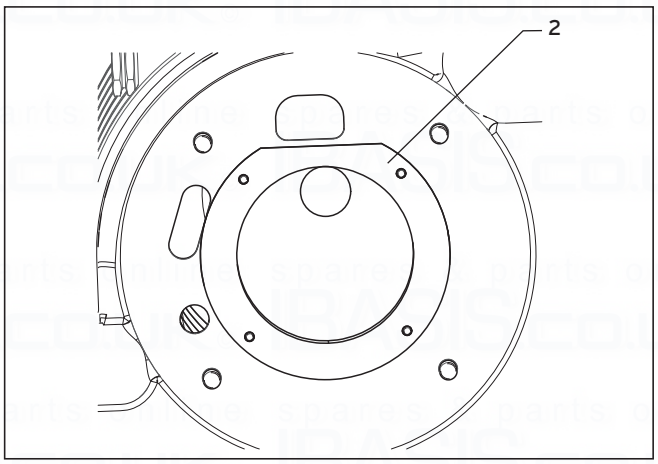

Fig. 8.8 Front plate

Note!
When inserting the burner, take care that it is seated in the rear guide slots (1) in the heat exchanger and the front plate (2) is flush with the heat exchanger.

Note!
Tighten the screws on the manifold evenly to 12 Nm.

- Open the gas valve and check for leaks up to the gas valve.
- Switch on the boiler.
- Use a gas sensing instrument to check for leaks in the gas/air combination behind the gas valve and along the burner gaskets.
- Tighten the screws to 12 Nm if necessary.

8.11 Checking the safety temperature limiter

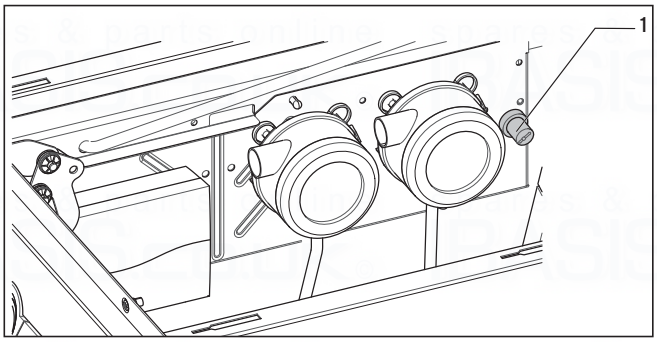

Fig. 8.9 Reset button

Key
1 STL reset button with cover cap

- Switch on the mains switch.
- Turn the heating circuit off.
- Set the unit to maximum feed temperature and heat the unit up to switch-off by the controller.
- After waiting for two minutes (temperature equalisation) start test program "**P.5**".

As a result of starting test program "**P.5**", the boiler remains in operation until the safety temperature limiter responds.
The test program "**P.5**" is called up by switching "**Mains on**" whilst simultaneously holding the "**+**" button down for 5 seconds. By pressing the "**Info**" button the test program is started and the boiler is started for the STL test.

Note!
The internal heating pump is not switched off for control technological reasons. The isolation units in the heating circuits should therefore remain closed during the STL test.

The boiler must switch off at 110 °C.
- Reset the safety temperature limiter after the boiler (see Section 9.4) has cooled down.

Note!
The test programme is automatically exited after 15 minutes. The test must be performed within this time period.

8.12 Functional check

After completion of all inspection and maintenance work, always carry out a function check as described in Section 6.6.

9 Troubleshooting

9.1 Status messages

- Press the "**i**" button to read the current operating status.
- Press the "**i**" button again to quit the display mode.

All the parameters are summarised in the following table.

Display	Status messages
	Heating mode
S.00	No heat required
S.02	Water pump pre-run
S.03	Ignition
S.04	Burner mode
S.06	Fan overrun
S.07	Water pump overrun
S.08	Burner lockout after heating operation
	Cylinder charging/Warm start
S.20	Water pump pre-run
S.23	Ignition
S.24	Burner mode
S.26	Fan overrun after cylinder charging
S.27	Water pump overrun
S.28	Burner lock after recharging (cycle suppression)
	Special cases of status message
S.30	230V/24V room thermostat is blocking heating operation
S.31	Summer mode active or eBus controller/built-in timer is blocking heating operation
S.32	Fan speed wait time (speed deviation still too great)
S.33	Pressure cartridge wait time (pressure cartridge contact still has not closed)
S.34	Frost protection mode active
S.35	Speed ramp wait time (speed deviation during ramp-up)
S.36	Target value specification of analogue regulator < 20 °C , i.e. the external regulator is blocking the heating operation
S.39	Contact thermostat has responded
S.40	Indicate emergency operation active; Unit runs in restricted Vaillant assured comfort mode. Corresponding error code alternates with status message in display
S.41	System pressure too high on water side
S.42	- Flue non-return valve feedback is blocking burner mode (only in connection with accessory) - Condensate pump faulty -> demand is blocked
S.49	Siphon pressure cartridge has triggered, wait time
S.53	Appliance is within the waiting period of the operation blocking function as a result of low water pressure (flow-return difference too great)
S.54	Appliance is within the waiting period of the operation blocking function as a result of low water pressure (temperature gradient)
S.96	Return sensor test running, heating demands are blocked
S.97	Water pressure sensor test running, heating requests are blocked
S.98	Flow and return sensor test in progress, heating requests are blocked

Table 9.1 Status messages

9.2 Diagnostic mode

In the diagnostic mode various parameters can be read off to allow display of the operating conditions and for fault diagnosis.

- Press the "**i**" and "**+**" buttons simultaneously to call up the diagnostic mode.
- Select the desired diagnostic point with the "**+**" and "**–**" buttons.
- Press the "**i**" button to display the relevant value.

Display	Meaning	Setting range and default setting for settable parameters
d. 0	Heating partial load, settable values in kW	Default setting: max. output
d. 1	Water pump overrun time for heating mode	Setting range: 2,3...60 min; Default setting: 5 mins
d. 2	Maximum burner block time at 20 °C	Setting range: 2..60 min ; Default setting: 20 min
d. 4	Measurement of cylinder temperature [°C]	
d. 5	Target value for flow/return temperature [°C]	Current target value, determined from potentiometer, controller, control type....
d. 7	Cylinder target temperature	(15°C on left, after that 40 °C to d.20 (max. 70 °C)
d. 8	Room thermostat at terminal 3-4	Displayed value: 0 = opened, no heating mode; 1 = closed, heating mode
d. 9	Flow target temperature [°C] from external analogue regulator to terminal 7-8-9/eBus	Minimum of ext. eBus target value and terminal 7 target value
d.10	Internal water pump	1 = on, 0 = off
d.11	External water pump	1 - 100 = on, 0 = off
d.12	Cylinder charging pump	1 - 100 = on, 0 = off
d.13	Circulation pump:	1 - 100 = on, 0 = off
d.14	Setting for speed-controlled internal pump	Setting range: 0=auto, 20 .. 100 % fixed setting; Default setting: 0
d.15	Current output of speed-controlled pump in %	
d.17	Control type	0 = flow regulation, 1 = return regulation; Default setting: 0
d.18	Pump operating mode (overrun)	0 = overrun (comfort); 1 = continuing (eco); Default setting: 0
d.20	Maximum setting value of cylinder target temp. potentiometer	Setting range: 50 °C-70 °C; Default setting: 65 °C
d.22	External cylinder charging, terminal C1-C2	1 = on, 0 = off
d.23	Summer/winter function: 1 = Winter, 0 = Summer	
d.24	Fan monitor	0 = contact open, 1 = contact closed
d.25	Recharging/warm start enabled by warm start clock regulator/timer: 1 = yes, 0 = no	Default: enabled
d.27	Switching of accessory relay 1 for the VR40 accessory	1 = circulation pump (default); 2 = ext. pump; 3 = cylinder charging pump 4 = flue non-return valve/extractor hood; 5 = external gas valve; 6 = external error message;
d.28	Switching of accessory relay 2 for the VR40 accessory	1 = circulation pump 2 = ext. pump (default); 3 = cylinder charging pump 4 = flue non-return valve/extractor hood; 5 = external gas valve; 6 = external error message;
d.30	Control signal for gas valves	0=off; 1=on
d.33	Target speed for fan [rpm x 10]	

Table 9.2 Diagnostic values (cont'd. on next page)

Display	Meaning	Setting range and default setting for settable parameters
d.34	Actual speed of fan [rpm x 10]	
d.40	Flow temperature [°C]	
d.41	Return temperature [°C]	
d.43	Boiler temperature	
d.44	Actual value of ionisation current	
d.47	Outside temperature [°C]	
d.50	Offset for minimum speed in rpm/10	Setting range: 0..300 Default setting: 30
d.51	Offset for maximum speed in rpm/10	Setting range: -99..-0 Default setting: -45
d.54	Switch-on hysteresis	OK - 10K, default setting: -2
d.55	Switch-off hysteresis	OK - 10K, default setting: 6
d.60	Number of temperature limited shutdowns	
d.61	Number of automatic firing system faults = Number of failed ignitions in the last attempt	
d.63	Number of shutdowns of the air monitoring	
d.64	Average ignition time in seconds	
d.65	Maximum ignition time in seconds	
d.67	Remaining burner blocking time [min]	
d.68	Number of unsuccessful ignitions in the first attempt	
d.69	Number of unsuccessful ignitions in the second attempt	
d.71	Maximum target value that can be set for the heating flow temperature	Setting range: 40 °C ... 85 °C; Default setting: 75 °C
d.72	Pump overrun after charging of a consumption water storage tank controlled by the electronics (also warm start and charging via C1/C2)	Setting range: 0, 10, 20 ... 600 s Default setting: 300 s
d.74	Anti-Legionella protection	0=off, 1=for activation enabled by controller
d.75	Maximum charging time for a storage without own controller	Setting range: 20, 21, ...90 min Default setting: 45 mins
d.77	Cylinder partial load (cylinder charging output limiting) in kW	Default setting: max. output
d.78	Cylinder charging temperature limiting (flow target temperature in cylinder charging mode) in °C	Setting range: 55 °C to 85 °C Default setting: 80 °C
d.80	Number of heating operation hours	Note: A single press of the "i" button displays the first 3 digits and a second press the next 3 digits of the 6-digit number (burner starts x 100).
d.81	Number of process water operating hours	
d.82	Number of operating cycles in heating mode	
d.83	Number of operating cycles in process water mode	
d.84	Maintenance indicator: Number of hours until the next maintenance activity	Setting range: 0 - 3000h and "-" Default setting: "-" (300 corresponds to 3000h)
d.90	Digital controller recognised =1, not recognised = 0 (eBUS address <=10)	
d.91	DCF status with connected external probe with DCF77 receiver 0: no reception; 1: reception; 2: synchronised; 3: valid	
d.93	Unit variant DSN setting	Setting range 0 ... 99 (0=80kW, 1 =120kW...5 =280kW)
d.96	Default setting (resetting settable parameters to default setting)	Setting range: 0 = off, 1 = on Default: 0
d.97	Activation of 2nd diagnostic level.	Password: 17
d.98	Telephone number on plain text display	Option for entering the telephone number to be displayed in the event of a malfunction
d.99	Language used in plain text display	

Table 9.2 Diagnostic values (cont.)

9.3 Error messages

A malfunction is indicated on the display by an "F" followed by a number. In addition, the "crossed-out flame" symbol is displayed.

Fault with No. "F.."	Description	Possible cause
0	Open circuit in flow sensor	
1	Open circuit in return sensor	
10	Short circuit, flow sensor	
11	Short circuit, return sensor	
13	Short circuit, cylinder sensor	
20	Safety temperature limiter has triggered	
22	Water pressure too low, lack of water	Water pressure less than 0.3 bar
27	"Extraneous light"	Flame detected although gas valve is closed; electronics fault
28	No flame at start	Gas supply missing, ignition or flame detection defective
29	No flame in operation	Fault in gas supply
30	Open circuit in boiler sensor	
31	Short circuit in boiler sensor	
32	Speed deviation too great; fan speed out of tolerance	Fault in cable harness, fan fault
33	Pressure cartridge is not switching on	
34	Pressure cartridge is not switching off (when fan stops)	
42	Coding resistor short circuited	Coding resistor short circuited or fault in cable harness
43	Coding resistor open circuit	Coding resistor open circuit or cable harness defective
49	eBus voltage short circuited	e.g. VRC 630/620 connected with reversed polarity or Netdialog incorrectly connected
60	Fault with gas valve actuation +	Electronics defective
61	Fault with gas valve actuation -	Electronics defective
62	Fault with gas valve switch-off	Electronics defective or flame still detected 4 s after gas shut off
63	EEPROM error	Electronics defective
64	ADC fault	Electronics defective or short circuit in safety-related sensor
65	Temperature of electronics (ASIC) too high	Electronics defective
66	Electronics error	Electronics defective
70	DSN error	Electronics and display identifiers do not agree
73	Water pressure sensor fault	Pressure sensor not connected or short circuit
74	Water pressure sensor fault	Pressure sensor defective or cable open circuit

Table 9.3 Error messages

9.4 Resetting the interlock after switch-off by the safety temperature limiter (STL)

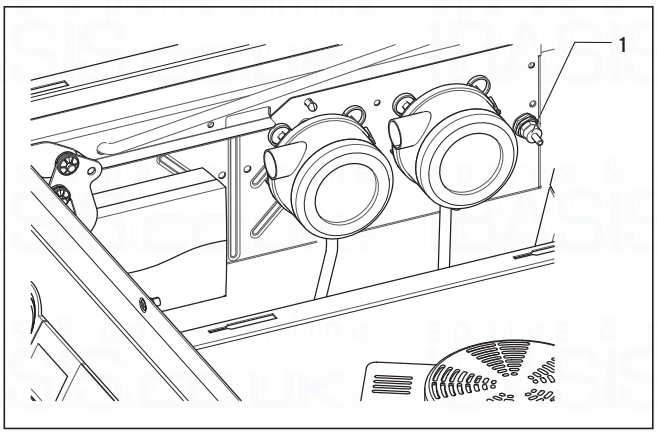

Fig. 9.1 Resetting the interlock after switch-off by the STL

If error code "**F.20**" is displayed, the safety temperature limiter (STL) has automatically shut down the boiler because the temperature is too high. Proceed as follows to reset it:
- Remove the front cover.
- Reset the STL by pushing the pin (**1**).

Always troubleshoot and rectify the malfunction any time the STL is triggered.

9.5 General notes

No indications in the display
If the boiler does not start, and there is no display in the read-out on the control panel, the following points should be checked:
- Electrical connection 230 V/50 Hz at the connection plug.
- Main switch turned on?
- Check the 4 AT fuse in the boiler controller.

Danger!
The 4 AT fuse is at 230 V. The boiler will have to be voltage free for checking and replacement.

Boiler does not respond to VRC 630 control unit
- Check the link between the "Bus" connections on the controller and the boiler.
- Switch the VRC 630 off and then on again so that it reads in the devices on the bus afresh.

Boiler does not respond to the 2 point control system
- Check on the System ProE whether the switch contact between terminals 3 and 4 has been closed by the external controller.

Note!
If a bridge is applied between terminals 3 and 4 and the ecoCRAFT starts up, the external controller must be checked.

Boiler does not respond to a request for hot water
- Check the settings of the regulator unit.
- Check the charging pump.
- Check the setting of the cylinder target value adjuster on the boiler controller.

9.6 Measurements on the components

Ionisation current
The ionisation current is at least 1.5 µA.

10 Factory customer service/ manufacturer's guarantee

10.1 Vaillant Service

To ensure regular servicing, it is strongly recommended that arrangements are made for a Maintenance Agreement. Please contact Vaillant Service Solutions (0870 6060 777) for further details.

10.2 Vaillant warranty

Vaillant provide a full parts and labour warranty for this appliance.
The appliance must be installed by a suitably competent person in accordance with the Gas Safety (Installation and Use) Regulations 1998, and the manufacturer's instructions. In the UK 'CORGI' registered installers undertake the work in compliance with safe and satisfactory standards.
All unvented domestic hot water cylinders must be installed by a competent person to the prevailing building regulations at the time of installation (G3).
Terms and conditions apply to the warranty, details of which can be found on the warranty registration card included with this appliance.
Failure to install and commission this appliance in compliance with the manufacturer's instructions may invalidate the warranty (this does not affect the customer's statutory rights).

11 Recycling and disposal

Recycling and disposal are already taken into account during the development of all Vaillant products. Vaillant's standards lay down strict requirements.
The recyclability, demountability and separability of materials and components are taken into account for the selection of materials in the same way as environmental hazards and health risks during recycling and the disposal of unavoidable remains of unusable residue.

11.1 Appliance

The Vaillant boiler consists up to 92 % of metallic materials which can be melted down again in steel and smelting works and can as a result be reused almost without limitation.
The EPS (Styropor)® EPP used for insulating the cylinder and other components can be recycled and is CFC-free.
The plastics used are marked, so that they are ready for sorting and unmixed separation of the materials during recycling.

11.2 Packaging

Vaillant has reduced the transport packaging of the appliance to the necessary minimum. The potential for recycling is consistently borne in mind when selecting the packing materials.
The high-quality cardboard packaging materials have been in demand as secondary raw materials in the cardboard and paper industry for a long time.
EPS and EPP (polystyrene)® are used to protect the products during transport. EPS is recyclable and CFC-free.
Even the films and tightening bands are made of recyclable plastic.

12 Technical data

	Term	Units	VKK GB 806/3-E-H	VKK GB 1206/3-E-H	VKK GB 1606/3-E-H	VKK GB 2006/3-E-H	VKK GB 2406/3-E-H	VKK GB 2806/3-E-H
Rated heat output range for heating	80/60	kW	13.6 -78.2	21.3 -113.4	26.2 -156.5	43.1 -196.8	47.0 -236.2	51.0 - 275.5
	60/40	kW	14.1 - 80.4	22.1 - 116.5	27.1 - 160.8	44.2 - 201.0	48.2 - 241.2	52.3 - 281.4
	40/30	kW	14.7 - 84.1	23.1 - 121.8	28.4 - 168.2	46.2 - 210.2	50.4 - 252.2	54.7 - 294.3
max. rated heat loading	H_i	kW	80.0	115.9	160.0	200.0	240.0	280.0
	Hs	kW	88.8	126.6	177.6	222.0	266.4	310.8
min. rated heat loading	H_i	kW	14.0	22.0	27.0	44.0	48.0	52.0
	Hs	kW	15.5	24.4	30.0	48.8	53.3	57.7
Category			I_{2H}					
Connection pressure	G20	mbar	20					
Supply requirement (15°C, 1013 mbar)	G20	m^3/h	8.5	12.3	16.9	21.2	25.4	29.6
Flue gas mass rate (G20)	Q_{min}	g/s	6.3	10.0	12.2	19.9	21.7	23.5
	Q_{max}	g/s	35.4	51.2	70.7	88.4	106.1	123.8
Exhaust temperature (for t_V/t_R = 80/60 °C)	min.	°C	60 - 65					
	max.	°C	65 - 70					
Nominal CO_2 (G20/G25)	Q_{min}	% by vol.	9.1					
	Q_{max}		9.3					
Residual delivery pressure		Pa	100.0	100.0	150.0	150.0	150.0	150.0
Maximum allowable pressure difference between combustion air inlet and flue gas outlet (including wind pressures)		Pa	200					
Maximum allowable CO_2-content in the combustion air (recirculation)		%	5					
NOx class			5					
NOx emission (BS EN 483)		mg/kWh	< 60					
CO emission		mg/kWh	< 20					
Heating								
Rated efficiency (stationary)	80/60	%	97.5			98.4		
30% efficiency (BS EN 483)		%	108.4			108,2		
WR star rating			****					
max. flow temperature		°C	85					
Adjustable flow temperature (Factory setting 80°C)		°C	35-85					
Max. operating pressure		bar	6					
Boiler capacity (without manifolds)		l	5.74	8.07	10.4	12.73	15.05	17.37
Nominal circulating water volume	Δt = 20K	m^3/h	3.44	4.99	6.88	8.60	10.33	12.05
Pressure loss	Δt = 20K	mbar	80	85	90	95	100	105
Condensate volume	40/30	l/h	13	20	27	34	40	47
Standby heat loss, heating	70 °C	%	< 0.4					

Table 12.1 Technical data

	Term	Units	VKK GB 806/3-E-H	VKK GB 1206/3-E-H	VKK GB 1606/3-E-H	VKK GB 2006/3-E-H	VKK GB 2406/3-E-H	VKK GB 2806/3-E-H
Electrical equipment								
Nominal voltage		V/Hz	230 / 50					
max. elec. power consumption		W	260	260	320	320	320	320
elec. power consumption in standby		W	8					
Level of protection			IP 20					
Fuses fitted			4 AT					
Dimensions and weights								
Height		mm	1285					
Width		mm	695					
Depth		mm	1240			1550		
Assembly weight		kg	200	220	235	275	295	310
Weight when ready for operation		kg	210	235	255	300	320	340
Heating connection		inch	R2"					
Condensate connection		Ø mm	21					
Gas connection		inch	1 1/2"					
Flue gas/air spigot		mm	150 / 130			200 / 130		
Miscellaneous								
Permissible installation types			C33,C43,C53,C63,C83,B23,B23P					
CE Registration No.(PIN)			CE-0063BS3986					

Table 12.1 Technical data

spares & parts online IBASIS.CO.UK

Vaillant Ltd
Vaillant House ▪ Medway City Estate ▪ Trident Close ▪ Rochester ▪ Kent ME2 4EZ
Telephone 01634 292300 ▪ Fax 01634 290166 ▪ www.vaillant.co.uk ▪ info@vaillant.co.uk

0020055744_03 GB 112008